PLANTING NOTES

GENERAL

1. ALL WORK SHALL CONFORM TO ALL APPLICABLE STATE AND LOCAL CODES, STANDARDS, AND SPECIFICATIONS.
2. LANDSCAPE DESIGN IS DIAGRAMMATIC IN NATURE. THE CONTRACTOR SHALL BE RESPONSIBLE FOR HIS OWN TAKEOFFS AND QUANTITY CALCULATIONS. IN THE EVENT OF A DISCREPANCY BETWEEN THE PLAN AND THE LANDSCAPE LEGEND, THE PLANT QUANTITY AS SHOWN ON THE PLAN SHALL TAKE PRECEDENCE AND NOTIFY THE LANDSCAPE ARCHITECT OF THESE DISCREPANCIES. MINOR ADJUSTMENTS TO THE LANDSCAPE MATERIAL AND LOCATIONS MAY BE PROPOSED FOR CITY CONSIDERATION AT THE CONSTRUCTION DOCUMENT STAGE TO RESPOND TO MARKET AND FIELD CONDITIONS. HOWEVER, THERE SHALL BE NO REDUCTION IN THE NUMBER AND SIZE OF MATERIALS.
3. CONTRACTOR SHALL MAKE HIMSELF AWARE OF THE LOCATIONS OF EXISTING AND PROPOSED UTILITIES, AND SHALL BE RESPONSIBLE FOR ANY DAMAGE TO THE UTILITIES AND/OR ANY INJURY TO ANY PERSON. THIS DRAWING IS PART OF A COMPLETE SET OF CONTRACT DOCUMENTS. UNDER NO CIRCUMSTANCES SHOULD THIS PLAN BE USED FOR CONSTRUCTION PURPOSES WITHOUT EXAMINING ACTUAL LOCATIONS OF UTILITIES ON SITE AND REVIEW ALL RELATED PLANS AND DOCUMENTS.
4. ALL UTILITY EASEMENTS SHALL REMAIN UNOBSTRUCTED AND FULLY ACCESSIBLE ALONG THEIR ENTIRE LENGTH FOR MAINTENANCE EQUIPMENT.
5. THE CONTRACTOR SHALL TAKE EXTREME CARE NOT TO DAMAGE ANY EXISTING PLANTS INDICATED AS "TO REMAIN". ANY SUCH PLANTS DAMAGED BY THE CONTRACTOR SHALL BE REPLACED WITH THE SAME SPECIES, SIZE, AND QUANTITY AT THE CONTRACTOR'S OWN EXPENSE, AND AS ACCEPTABLE TO THE OWNER. REFER TO THE TREE PROTECTION NOTES ON THE PLANS (AS APPLICABLE).
6. LANDSCAPE CONTRACTOR SHALL EXAMINE THE SITE CONDITIONS UNDER WHICH THE WORK IS TO BE PERFORMED AND NOTIFY THE GENERAL CONTRACTOR IN WRITING OF UNSATISFACTORY CONDITIONS. IF SITE CONDITIONS OR PLANT AVAILABILITY REQUIRE CHANGES TO THE PLAN, THEN AN APPROVAL WILL BE OBTAINED FROM THE CITY. DO NOT PROCEED UNTIL CONDITIONS HAVE BEEN CORRECTED.
7. ALL CONSTRUCTION DEBRIS AND MATERIAL SHALL BE REMOVED AND CLEANED OUT PRIOR TO INSTALLATION OF TOPSOIL, TREES, SHRUBS, AND TURF.
8. FOR ALL INFORMATION ON SURFACE MATERIAL OF WALKS, DRIVES, AND PARKING LOTS, SEE THE SITE PLAN. SEE PHOTOMETRIC PLAN FOR FREE STANDING LIGHTING INFORMATION.
9. THE LANDSCAPE CONTRACTOR SHALL NOTIFY THE LANDSCAPE ARCHITECT ONE WEEK PRIOR TO BEGINNING CONSTRUCTION.
10. WINTER WATERING SHALL BE AT THE EXPENSE OF THE CONTRACTOR UNTIL SUCH TIME AS FINAL ACCEPTANCE IS RECEIVED.
11. ALL LANDSCAPE CONSTRUCTION PRACTICES, WORKMANSHIP, AND ETHICS SHALL, BE IN ACCORDANCE WITH INDUSTRY STANDARDS SET FORTH IN THE CONTRACTORS HANDBOOK PUBLISHED BY THE COLORADO LANDSCAPE CONTRACTORS ASSOCIATION.
12. LANDSCAPE AND IRRIGATION WORK SHALL BE COMPLETED PRIOR TO THE ISSUANCE OF THE FINAL CERTIFICATE OF OCCUPANCY.

FINISH GRADING AND SOIL PREPARATION

13. CONTRACTOR SHALL CONSTRUCT AND MAINTAIN FINISH GRADES AS RECOMMENDED BY THE GEOTECHNICAL REPORT. ALL LANDSCAPE AREAS SHALL HAVE POSITIVE DRAINAGE AWAY FROM STRUCTURES AT THE MINIMUM SLOPE SPECIFIED IN THE REPORT, AND AREAS OF POTENTIAL PONDING SHALL BE REGRADED TO BLEND IN WITH THE SURROUNDING GRADES AND ELIMINATE PONDING POTENTIAL. SHOULD ANY CONFLICTS AND/OR DISCREPANCIES ARISE BETWEEN THE GEOTECHNICAL REPORT, THE GRADING PLANS, THESE NOTES, AND ACTUAL CONDITIONS, THE CONTRACTOR SHALL IMMEDIATELY BRING SUCH ITEMS TO THE ATTENTION OF THE LANDSCAPE ARCHITECT AND OWNER.
14. AFTER FINISH GRADES HAVE BEEN ESTABLISHED, IT IS RECOMMENDED THAT THE CONTRACTOR SHALL HAVE SOIL SAMPLES TESTED BY AN ESTABLISHED SOIL TESTING LABORATORY FOR THE FOLLOWING: GENERAL SOIL FERTILITY, PH, ORGANIC MATTER CONTENT, SALT (CEC), LIME, SODIUM ADSORPTION RATIO (SAR) AND BORON CONTENT. EACH SAMPLE SUBMITTED SHALL CONTAIN NO LESS THAN ONE QUART OF SOIL. CONTRACTOR SHALL ALSO SUBMIT THE PROJECT'S PLANT LIST TO THE LABORATORY ALONG WITH THE SOIL SAMPLES. THE SOIL REPORT PRODUCED BY THE LABORATORY SHALL CONTAIN RECOMMENDATIONS FOR THE FOLLOWING (AS APPROPRIATE): GENERAL SOIL PREPARATION AND BACKFILL MIXES, PRE-PLANT FERTILIZER APPLICATIONS, AND ANY OTHER SOIL RELATED ISSUES. THE REPORT SHALL ALSO PROVIDE A FERTILIZER PROGRAM FOR THE ESTABLISHMENT PERIOD AND FOR LONG-TERM MAINTENANCE.
15. THE CONTRACTOR SHALL RECOMMEND INSTALLATION OF SOIL AMENDMENTS AND FERTILIZERS PER THE SOILS REPORT FOR THE THE OWNER/OWNER'S REPRESENTATIVE CONSIDERATION.
16. AT A MINIMUM, ALL TOPSOIL SHALL BE AMENDED WITH NITROGEN STABILIZED ORGANIC AMENDMENT COMPOST AT A RATE OF 5.0 CUBIC YARDS AND AMMONIUM PHOSPHATE 16-20-0 AT A RATE OF 15 POUNDS PER THOUSAND SQUARE FEET OF LANDSCAPE AREA. COMPOST SHALL BE MECHANICALLY INTEGRATED INTO THE TOP 6" OF SOIL BY MEANS OF ROTOTILLING AFTER CROSS-RIPPING. GROUND COVER & PERENNIAL BED AREAS SHALL BE AMENDED AT A RATE OF 8 CUBIC FEET PER THOUSAND SQUARE FEET OF NITROGEN STABILIZED ORGANIC AMENDMENT AND 10 LBS. OF 12-12-12 FERTILIZER PER CU. YD., ROTOTILLED TO A DEPTH OF 8". NO MANURE OR ANIMAL-BASED PRODUCTS SHALL BE USED FOR ORGANIC AMENDMENTS.

PLANTING

17. ALL DECIDUOUS TREES SHALL HAVE FULL, WELL-SHAPED HEADS/ALL EVERGREENS SHALL BE UNSHEARED AND FULL TO THE GROUND; UNLESS OTHERWISE SPECIFIED. TREES WITH CENTRAL LEADERS WILL NOT BE ACCEPTED IF LEADER IS DAMAGED OR REMOVED. PRUNE ALL DAMAGED TWIGS AFTER PLANTING.
18. ALL PLANTS WITHIN A SPECIES SHALL HAVE SIMILAR SIZE, AND SHALL BE OF A FORM TYPICAL FOR THE SPECIES. ANY PLANT DEEMED UNACCEPTABLE BY THE LANDSCAPE ARCHITECT SHALL BE IMMEDIATELY REMOVED FROM THE SITE AND SHALL BE REPLACED WITH AN ACCEPTABLE PLANT OF LIKE TYPE AND SIZE AT THE CONTRACTOR'S OWN EXPENSE. ANY PLANTS APPEARING TO BE UNHEALTHY, EVEN IF DETERMINED TO STILL BE ALIVE, SHALL NOT BE ACCEPTED. THE LANDSCAPE ARCHITECT SHALL BE THE SOLE JUDGE AS TO THE ACCEPTABILITY OF PLANT MATERIAL.
19. ALL TREES SHALL BE GUYED AND WOOD STAKED AS PER DETAILS. NO "T-STAKES" SHALL BE USED FOR TREES.
20. ALL PLANT MATERIALS SHALL BE TRUE TO TYPE, SIZE, SPECIES, QUALITY, AND FREE OF INJURY, BROKEN ROOT BALLS, PESTS, AND DISEASES, AS WELL AS CONFORM TO THE MINIMUM REQUIREMENTS DESCRIBED IN THE "AMERICAN STANDARD FOR NURSERY STOCK". FOLLOW GREENCO TREE PLANTING RECOMMENDATIONS FOR MINIMUM QUALITY REQUIREMENTS FOR TREES.
21. ALL TREE AND SHRUB BED LOCATIONS ARE TO BE STAKED OUT ON SITE FOR APPROVAL BY THE LANDSCAPE ARCHITECT PRIOR TO INSTALLATION.
22. ALL TREES PLANTED ADJACENT TO PUBLIC AND/OR PEDESTRIAN WALKWAYS SHALL BE PRUNED CLEAR OF ALL BRANCHES BETWEEN GROUND AND A HEIGHT OF EIGHT (8) FEET FOR THAT PORTION OF THE PLAN LOCATED OVER THE SIDEWALK AND/OR ROAD.
23. ALL PLANT MATERIAL SHALL NOT BE PLANTED PRIOR TO INSTALLATION OF TOPSOIL.
24. ALL PLANT BEDS SHALL BE CONTAINED WITH STEEL EDGER. STEEL EDGER IS NOT REQUIRED ALONG CURBS, WALKS OR BUILDING FOUNDATIONS. ALL EDGING SHALL OVERLAP AT JOINTS A MINIMUM OF 6-INCHES, AND SHALL BE FASTENED WITH A MINIMUM OF 4 PINS PER EACH 10 FOOT SECTION. THE TOP OF ALL EDGING MATERIAL SHALL BE A ROLLED TOP AND 1/2 INCH ABOVE THE FINISHED GRADE OF ADJACENT LAWN OR MULCH AREAS. COLOR: GREEN.
25. THE DEVELOPER, HIS SUCCESSOR, OR ASSIGNEE SHALL BE RESPONSIBLE FOR ESTABLISHING AND CONTINUING A REGULAR PROGRAM OF MAINTENANCE FOR ALL LANDSCAPED AREAS. SEE LANDSCAPE GUARANTEE AND MAINTENANCE NOTE.
26. A 3-FOOT CLEAR SPACE SHALL BE MAINTAINED AROUND THE CIRCUMFERENCE OF ALL FIRE HYDRANTS.
27. LANDSCAPE CONTRACTOR TO SUBMIT SAMPLES OF MISCELLANEOUS LANDSCAPING MATERIALS TO THE LANDSCAPE ARCHITECTS AND OWNER'S REPRESENTATIVE FOR APPROVAL PRIOR TO INSTALLATION, IE.; MULCH, EDGER, LANDSCAPE FABRIC, ETC.

MULCHING

28. AFTER ALL PLANTING IS COMPLETE, THE CONTRACTOR SHALL INSTALL A MINIMUM 4" THICK LAYER OF MULCH AS SPECIFIED IN THE PLANTING LEGEND. INSTALL A 4" THICK RING OF DOUBLE SHREDDED CEDAR BARK MULCH AROUND ALL PLANT MATERIAL IN ROCK MULCH BEDS WHERE LANDSCAPING IS SHOWN ON THE PLANS. WOOD MULCH RING SIZE SHALL BE THE CONTAINER SIZE OF THE SHRUBS, PERENNIALS, AND ORNAMENTAL GRASSES. TREE RING SIZE SHALL BE GREEN INDUSTRIES OF COLORADO INDUSTRY STANDARD WIDTH.
29. ALL MULCH SHALL BE HARVESTED IN A SUSTAINABLE MANNER FROM A LOCAL SOURCE.
30. INSTALL DEWITT PRO-5 WEED BARRIER FABRIC UNDER ALL ROCK MULCH SHRUB BEDS SPECIFIED ON THE PLANS ONLY. NO LANDSCAPE FABRIC SHALL BE USED IN WOOD MULCH AREAS. NO PLASTIC WEED BARRIERS SHALL BE SPECIFIED.
31. ABSOLUTELY NO EXPOSED GROUND SHALL BE LEFT SHOWING ANYWHERE ON THE PROJECT AFTER MULCH HAS BEEN INSTALLED.
32. ALL PLANTING AREAS WITH LESS THAN A 4:1 GRADIENT SHALL RECEIVE A LAYER OF MULCH, TYPE AND DEPTH PER PLANS. SUBMIT 1 CUBIC FOOT SAMPLE OF MULCH (ONE SAMPLE PER TYPE) TO LANDSCAPE ARCHITECT FOR APPROVAL PRIOR TO INSTALLATION. THE MULCH SHALL BE SPREAD EVENLY THROUGHOUT ALL PLANTING AREAS EXCEPT SLOPES 4:1 OR STEEPER, OR AS OTHERWISE DENOTED ON THE PLAN. ABSOLUTELY NO EXPOSED GROUND SHALL REMAIN IN AREAS TO RECEIVE MULCH AFTER MULCH HAS BEEN INSTALLED.
33. ALL PLANTING AREAS ON SLOPES OVER 4:1 SHALL RECEIVE COCONUT FIBER EROSION CONTROL NETTING FROM ROLLS. NETTING SHALL BE JCT-125, AS MANUFACTURED BY NORTH AMERICAN GREEN (OR EQUAL). INSTALL AND STAKE PER MANUFACTURER'S SPECIFICATIONS. SEE ALSO THE CIVIL ENGINEER'S EROSION CONTROL PLAN.

IRRIGATION CONCEPT

1. AN AUTOMATIC IRRIGATION SYSTEM SHALL BE INSTALLED AND OPERATIONAL BY THE TIME OF FINAL INSPECTION. THE ENTIRE IRRIGATION SYSTEM SHALL BE INSTALLED BY A QUALIFIED IRRIGATION CONTRACTOR.
2. THE IRRIGATION SYSTEM WILL HAVE APPROPRIATE BACKFLOW PREVENTION DEVICES INSTALLED TO PREVENT CONTAMINATION OF THE WATER SOURCE IF APPLICABLE.
3. ALL NON-TURF/SEED PLANTED AREAS WILL BE DRIP IRRIGATED. TURF SOD/SEED SHALL RECEIVE POP-UP SPRAY IRRIGATION FOR HEAD TO HEAD COVERAGE.
4. ALL PLANTS SHARING SIMILAR HYDROZONE CHARACTERISTICS SHALL BE PLACED ON A VALVE DEDICATED TO PROVIDE THE NECESSARY WATER REQUIREMENTS SPECIFIC TO THAT HYDROZONE.
5. THE IRRIGATION SYSTEM SHALL BE DESIGNED AND INSTALLED, TO THE MAXIMUM EXTENT POSSIBLE, TO CONSERVE WATER BY USING THE FOLLOWING DEVICES AND SYSTEMS: MATCHED PRECIPITATION RATE TECHNOLOGY ON ROTOR AND SPRAY HEADS (WHEREVER POSSIBLE), RAIN SENSORS, AND SMART MULTI-PROGRAM COMPUTERIZED IRRIGATION CONTROLLERS FEATURING SENSORY INPUT CAPABILITIES.

LANDSCAPE GUARANTEE AND MAINTENANCE

1. THE LANDSCAPE CONTRACTOR SHALL GUARANTEE ALL TREES, SHRUBS, PERENNIALS, SOD, SEEDED AREAS, AND IRRIGATION SYSTEMS FOR A PERIOD OF ONE YEAR FROM THE DATE OF THE OWNER'S ACCEPTANCE. THE CONTRACTOR SHALL REPLACE, AT HIS OWN EXPENSE, ANY PLANTS WHICH DIE IN THAT TIME, OR REPAIR ANY PORTIONS OF THE IRRIGATION SYSTEM WHICH OPERATE IMPROPERLY.
2. THE LANDSCAPE CONTRACTOR SHALL MAINTAIN THE LANDSCAPE IN A NEAT, CLEAN, AND HEALTHY CONDITION FOR A PERIOD OF 90 DAYS. THIS SHALL INCLUDE PROPER PRUNING, MOWING AND AERATION OF LAWNS, WEEDING, REPLACEMENT OF MULCH, REMOVAL OF LITTER, AND THE APPROPRIATE WATERING OF ALL PLANTINGS. IRRIGATION SHALL BE MAINTAINED IN PROPER WORKING ORDER, WITH SCHEDULING ADJUSTMENTS BY SEASON AND TO MAXIMIZE WATER CONSERVATION. IF SITE OPENS DURING WINTER, TO AVOID FREEZE DAMAGE ON PLANTINGS, THE 90 DAYS SHOULD BEGIN AFTER ACCEPTANCE OF THE WORK.
3. DURING THE LANDSCAPE MAINTENANCE PERIOD, THE LANDSCAPE CONTRACTOR SHALL MAINTAIN POSITIVE DRAINAGE AWAY FROM STRUCTURES IN ALL LANDSCAPE AREAS AT THE MINIMUM SLOPE SPECIFIED IN THE GEOTECHNICAL REPORT. LANDSCAPE AREAS WHICH SETTLE AND CREATE THE POTENTIAL FOR PONDING SHALL BE REPAIRED TO ELIMINATE PONDING POTENTIAL AND BLEND IN WITH THE SURROUNDING GRADES. SHOULD ANY CONFLICTS AND/OR DISCREPANCIES ARISE BETWEEN THE GEOTECHNICAL REPORT, THE GRADING PLANS, THESE NOTES, AND ACTUAL CONDITIONS, THE CONTRACTOR SHALL IMMEDIATELY BRING SUCH ITEMS TO THE ATTENTION OF THE LANDSCAPE ARCHITECT AND OWNER.
4. LANDSCAPE IMPROVEMENTS AND MAINTENANCE SHALL BE THE RESPONSIBILITY OF OWNER AND/OR THEIR ASSIGNS.

UTILITY NOTES

1. THE LANDSCAPE CONTRACTOR IS REQUIRED TO CONTACT THE COUNTY PUBLIC WORKS DEPARTMENT, AND ANY OTHER PUBLIC OR PRIVATE AGENCY NECESSARY FOR UTILITY LOCATION PRIOR TO ANY CONSTRUCTION.
2. THIS DRAWING IS A PART OF A COMPLETE SET OF BID DOCUMENTS, SPECIFICATIONS, ADDITIONAL DRAWINGS, AND EXHIBITS. UNDER NO CIRCUMSTANCES SHOULD THESE PLANS BE USED FOR CONSTRUCTION PURPOSES WITHOUT EXAMINING ACTUAL LOCATIONS OF UTILITIES ON SITE, AND REVIEWING ALL RELATED DOCUMENTS.
3. THE LOCATION OF THE ALL UNDERGROUND UTILITIES ARE LOCATED ON THE ENGINEERING DRAWINGS FOR THIS PROJECT. THE MOST CURRENT REVISION IS HERE IN MADE PART OF THIS DOCUMENT. UNDERGROUND UTILITIES EXIST THROUGHOUT THIS SITE AND MUST BE LOCATED PRIOR TO ANY CONSTRUCTION ACTIVITY. WHERE UNDERGROUND UTILITIES EXIST, FIELD ADJUSTMENT MAY BE NECESSARY AND MUST BE APPROVED BY A REPRESENTATIVE OF THE OWNER. NEITHER THE OWNER NOR THE LANDSCAPE ARCHITECT ASSUMES ANY RESPONSIBILITY WHATSOEVER, IN RESPECT TO THE CONTRACTORS ACCURACY IN LOCATING THE INDICATED PLANT MATERIAL, AND UNDER NO CIRCUMSTANCES SHOULD THESE PLANS BE USED WITHOUT REFERENCING THE ABOVE MENTIONED DOCUMENTS.

VICINITY MAP
0 50 100 200
SCALE: 1"=200'

PROJECT CONTACTS

PROPERTY OWNER
THIRTEEN OUTLAWS, LLC
4850 AUSTIN BLUFFS PKWY
COLORADO SPRINGS, CO 80918
TELE: (719)-439-9263
ATTN: ADRIAN D. HOPE
EMAIL: ADRIAN@HOPE4WELLNESS.COM

APPLICANT
THIRTEEN OUTLAWS, LLC
4850 AUSTIN BLUFFS PKWY
COLORADO SPRINGS, CO 80918
TELE: (719)-439-9263
ATTN: ADRIAN D. HOPE
EMAIL: ADRIAN@HOPE4WELLNESS.COM

CIVIL ENGINEER
GALLOWAY & CO., INC.
1155 KELLY JOHNSON BLVD., SUITE 305
COLORADO SPRINGS, CO 80920
TELE: (719) 900-7220
ATTN: BRADY SHYROCK, P.E.
EMAIL: BRADYSHYROCK@GALLOWAYUS.COM

GEOTECHNICAL ENGINEER
ROCKY MOUNTAIN GEOTECHNICAL, INC
555 E. PIKES PEAK AVE, SUITE 107
COLORADO SPRINGS, CO 80903
TELE: (303) 634-1999
ATTN: TONY MUNGER, P.E.

TRAFFIC ENGINEER
GALLOWAY & CO., INC.
5500 GREENWOOD PLAZA BLVD, SUITE 200
GREENWOOD VILLAGE, CO 80111
TELE: (303) 770-8884
ATTN: BRIAN HORAN, P.E.
EMAIL: BRIANHORAN@GALLOWAYUS.COM

SURVEYOR
GALLOWAY & CO., INC.
1155 KELLY JOHNSON BLVD., SUITE 305
COLORADO SPRINGS, CO 80920
TELE: (719) 337-1262
ATTN: BRIAN DENNIS
EMAIL: BRIANDENNIS@GALLOWAYUS.COM

LANDSCAPE REQUIREMENTS

CODE SECTION	CATEGORY	FORMULA	CALCULATION	REQUIRED	PROVIDED	ABBREVIATION DENOTED ON PLAN
6.2.2 B TABLE 6-1	LANDSCAPE SETBACKS	AUSTIN BLUFFS PKWY (PRINCIPLE ARTERIAL) 25 FT SETBACK & 1 TREE/ 20 LF	193 LF SETBACK @ 1 TREE / 20 LF	25 FT SETBACK & 10 TREES	25 FT SETBACK & 10 TREES	(AB)
6.2.2.D	LANDSCAPE BUFFER	NON-RESIDENTIAL ADJACENT TO RESIDENTIAL (ZONING) 15 FT BUFFER & 1 TREE/ 25 LF	193 LF BUFFER @ 1 TREE / 25 LF	15 FT BUFFER & 8 TREES	5 FT BUFFER & 8+ TREES	(NB)
6.2.2.E.2	INTERNAL LANDSCAPE	NON RESIDENTIAL - 5%	TOTAL AREA 17,736 SF X 0.05	887 SF	7,264 SF (40%)	N/A
6.2.2.E.2	INTERNAL LANDSCAPE	1 TREE / 500 SF	887 SF / 500	2 TREES	2 TREES	(IN)
6.2.2.C	MOTOR VEHICLE	1 TREE / 15 PARKING SPACES	25 PARKING SPACES / 15	2 TREES	2 TREES	(MV)
6.2.2.C	VEHICLE LOT SCREENING	2/3 LENGTH OF NORTH BOUNDARY	TOTAL NORTH BOUNDARY FRONTAGE 117 LF X 0.66	78 LF SCREENED	78 LF SCREENED	N/A
6.2.2.C	VEHICLE LOT SCREENING	2/3 LENGTH OF AUSTIN BLUFFS PKWY	TOTAL AUSTIN BLUFFS PKWY FRONTAGE 117 LF X 0.66	78 LF SCREENED	78 LF SCREENED	N/A

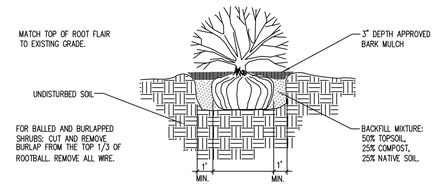

1.1 SHRUB PLANTING
N.T.S.

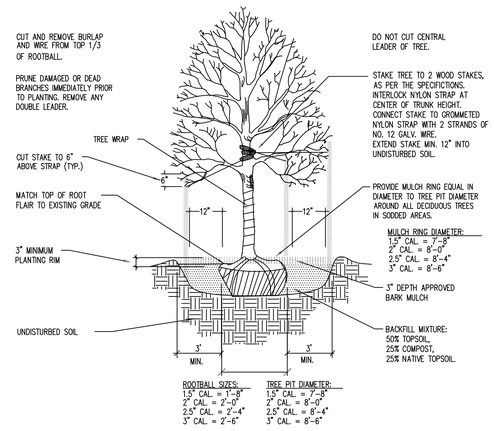

1.2 DECIDUOUS TREE PLANTING
N.T.S.

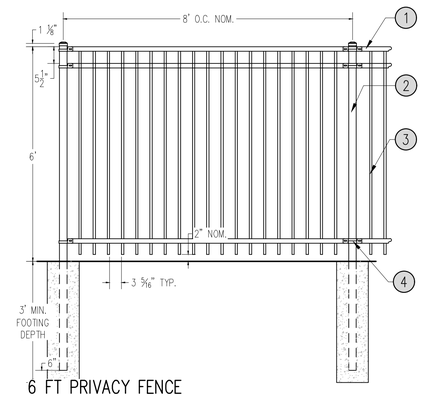

6 FT PRIVACY FENCE

1. 1 1/2" RAIL
2. POST 2 1/2" X 16 GAUGE
3. 3/4" 18 GAUGE PICKET
4. BRACKET

1.4 ORNAMENTAL FENCE
N.T.S.

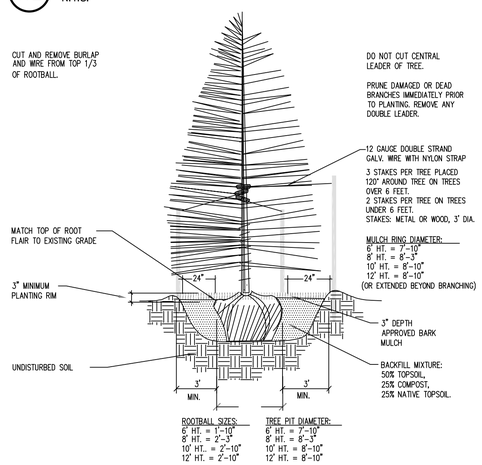

1.3 CONIFEROUS TREE PLANTING
N.T.S.

Galloway
6162 S. Willow Drive, Suite 320
Greenwood Village, CO 80111
303.770.8884
GallowayUS.com

PRELIMINARY
NOT FOR BIDDING
NOT FOR CONSTRUCTION

COPYRIGHT
THESE PLANS ARE AN INSTRUMENT OF SERVICE AND ARE THE PROPERTY OF GALLOWAY, AND MAY NOT BE DUPLICATED, DISCLOSED, OR REPRODUCED WITHOUT THE WRITTEN CONSENT OF GALLOWAY. COPYRIGHTS AND INFRINGEMENTS WILL BE ENFORCED AND PROSECUTED.

SITE DEVELOPMENT PLAN
HOPE PHYSICAL THERAPY-PARKING LOT
THIRTEEN OUTLAWS, LLC
4850 AUSTIN BLUFFS PKWY
COLORADO SPRINGS, CO 80918

#	Date	Issue / Description	Init.

Project No:	HPT01
Drawn By:	ASA/MRK
Checked By:	CRD
Date:	AUGUST 2023

LANDSCAPE DETAILS

C5.0
Sheet 6 of 8

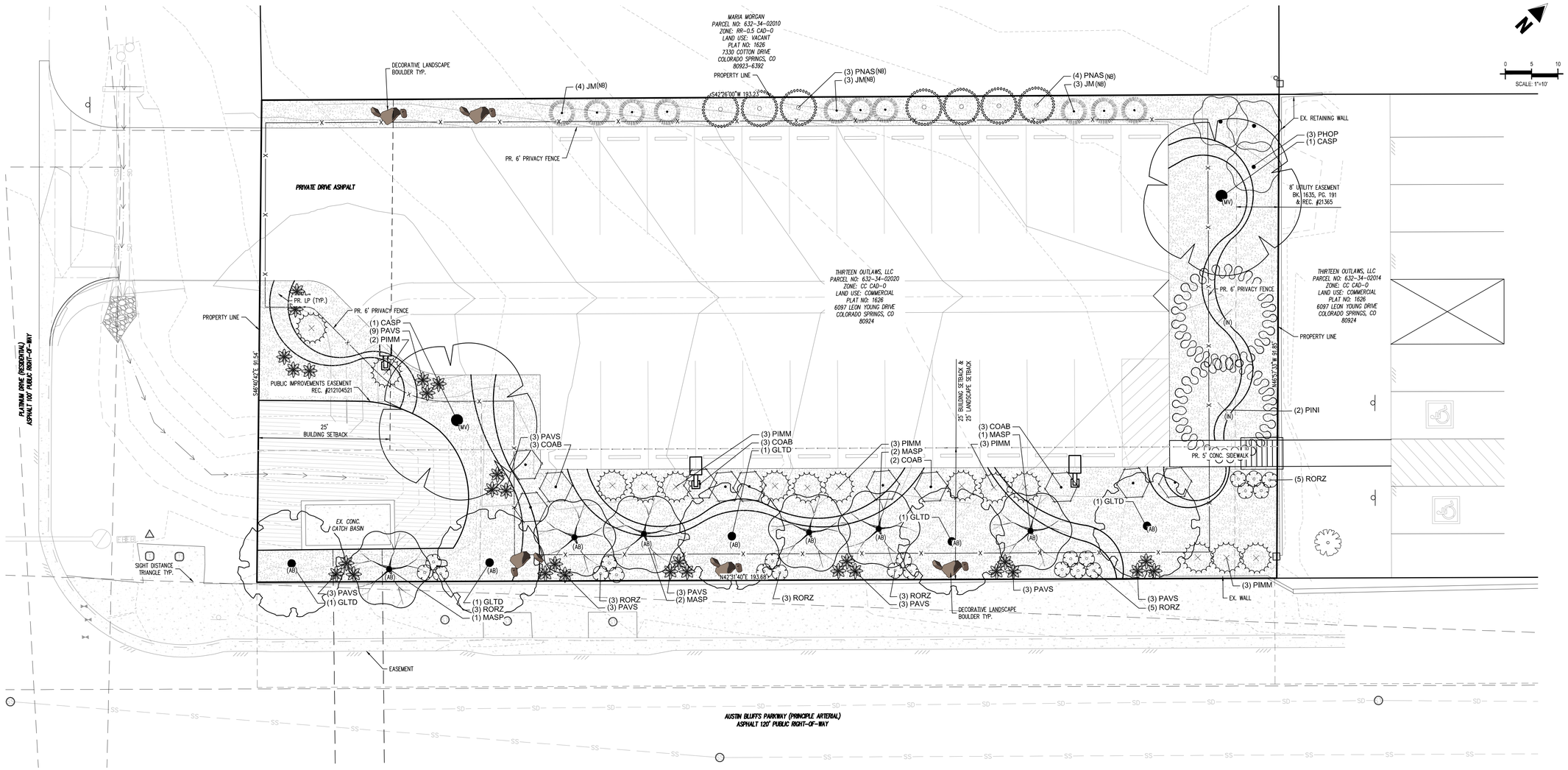

PLANT SCHEDULE

DECIDUOUS TREES	CODE	QTY	COMMON NAME	BOTANICAL NAME	CONT.	CAL / SIZE	HT. X SPD.
	CASP	2	NORTHERN CATALPA	CATALPA SPECIOSA	B&B	2" CAL	50'X30'
	GLTD	5	STREET KEEPER HONEY LOCUST	GLEDITSIA TRIACANTHOS INERMIS 'DRAVES' TM	B&B	2" CAL	45'X20'

EVERGREEN TREES	CODE	QTY	COMMON NAME	BOTANICAL NAME	CONT.	CAL / SIZE	HT. X SPD.
	JM	10	MOONGLOW JUNIPER	JUNIPERUS SCOPULORUM 'MOONGLOW'	B&B	6' HT	20'X5'
	PINI	2	AUSTRIAN PINE	PINUS NIGRA	B&B	6' HT	50'X20'
	PNAS	7	ARNOLD SENTINEL AUSTRIAN PINE	PINUS NIGRA 'ARNOLD SENTINEL'	B&B	6' HT	25'X7'

ORNAMENTAL TREES	CODE	QTY	COMMON NAME	BOTANICAL NAME	CONT.	CAL / SIZE	HT. X SPD.
	MASP	6	SPRING SNOW CRABAPPLE	MALUS X 'SPRING SNOW'	B&B	1.5" CAL	20'X15'

DECIDUOUS SHRUBS	CODE	QTY	COMMON NAME	BOTANICAL NAME	CONT.	HT. X SPD.
	COAB	11	IVORY HALO DOGWOOD	CORNUS ALBA 'BAILHALO' TM	#5 CONT.	6'X6'
	PHOP	3	COPPERTINA NINEBARK	PHYSOCARPUS OPULIFOLIUS 'MINDIA' TM	#5 CONT.	10'X10'
	RORZ	22	KNOCK OUT SHRUB ROSE	ROSA X 'RADRAZZ' TM	#5 CONT.	3'X3'

EVERGREEN SHRUBS	CODE	QTY	COMMON NAME	BOTANICAL NAME	CONT.	HT. X SPD.
	PIMM	14	MOPS MUGO PINE	PINUS MUGO 'MOPS'	#5 CONT.	5'X6'

ORNAMENTAL GRASSES	CODE	QTY	COMMON NAME	BOTANICAL NAME	CONT.	HT. X SPD.
	PAVS	30	SHENANDOAH SWITCH GRASS	PANICUM VIRGATUM 'SHENANDOAH'	#1 CONT.	4'X3'

GROUND COVERS	CODE	QTY	COMMON NAME	BOTANICAL NAME	TYPE
	ELTR	871 SF	EXISTING LANDSCAPE TO REMAIN	EXISTING LANDSCAPE TO REMAIN	OTHER

MULCH	CODE	QTY	COMMON NAME	BOTANICAL NAME	TYPE
	RMULCH	6,097 SF	SADDLEBACK SWIRL 3" DEPTH MINIMUM	1.5" ROCK COBBLE MULCH	MULCH
	RMULCH2	623 SF	WHITE SPECKLED RIVER ROCK 4" MIN. DEPTH	2"-4" ROCK COBBLE	MULCH

Galloway
6162 S. Willow Drive, Suite 320
Greenwood Village, CO 80111
303.770.8884
GallowayUS.com

PRELIMINARY
NOT FOR BIDDING
NOT FOR CONSTRUCTION

COPYRIGHT
THESE PLANS ARE AN INSTRUMENT OF SERVICE AND ARE THE PROPERTY OF GALLOWAY, AND MAY NOT BE DUPLICATED, DISCLOSED, OR REPRODUCED WITHOUT THE WRITTEN CONSENT OF GALLOWAY. COPYRIGHTS AND INFRINGEMENTS WILL BE ENFORCED AND PROSECUTED.

SITE DEVELOPMENT PLAN
HOPE PHYSICAL THERAPY-PARKING LOT

THIRTEEN OUTLAWS, LLC

4850 AUSTIN BLUFFS PKWY
COLORADO SPRINGS, CO 80918

#	Date	Issue / Description	Init.

Project No:	HPT01
Drawn By:	ASA/MRK
Checked By:	CRD
Date:	AUGUST 2023

ALTERNATIVE LANDSCAPE PLAN

C5.1