January 2, 2019

Len Kendall
El Paso County Planning and Community Development
2880 International Cir
Colorado Springs, CO 80910

RE: Drainage Conformance Letter
Lot 4, the Shops Filing 1 at Meridian Ranch
PCD File No. PPR-18-033

Dear Mr. Kendall

The attached short form drainage report is to serve as a statement of compliance for the development of Lot 4 of the Shops Filing 1 at Meridian Ranch commercial property with the *Preliminary/Final Drainage Report for Meridian Ranch Filing 4B, The Shops at Meridian Ranch* (the REPORT) prepared by Tech Contractors, dated April 2014, and approved on September 9, 2014. The REPORT provides hydrologic and hydraulic analysis for the development located at the northeast corner of Meridian Road and Stapleton Drive in El Paso County, Colorado.

Sincerely

Thomas A. Kerby, PE
Tech Contractors
11886 Stapleton Drive
Falcon, CO 80831
719.495.7444

Telephone No.: 719.495.7444

11886 Stapleton Dr
Falcon CO. 80831

Billing Address
P. O. Box 80036
San Diego, CA 92138

CERTIFICATIONS

Design Engineer's Statement:

The attached drainage plan and report were prepared under my direction and supervision and are correct to the best of my knowledge and belief. Said drainage report has been prepared according to the criteria established by the County for drainage reports and said report is in conformity with the applicable master plan of the drainage basin. I accept responsibility for any liability caused by any negligent acts, errors or omissions on my part in preparing this report.

Thomas A. Kerby, P.E. #31429

Owner/Developer's Statement:

I, the owner/developer have read and will comply with all of the requirements specified in this drainage report and plan.

_____ _____

Raul Guzman, Vice President Date
GTL Development, Inc.
P.O. Box 80036
San Diego, CA 92138

El Paso County:

Filed in accordance with the requirements of the Drainage Criteria Manual, Volumes 1 & 2, El Paso County Engineering Criteria Manual and Land Development Code as amended.

_____ _____

Jennifer Irvine, P.E. Date
County Engineer / ECM Administrator

Introduction

This short report was prepared for the commercial Lot 4 of the Shops Filing 1 at Meridian Ranch. The report shows the drainage for developed lot is in substantial conformance with the original calculations established with the *Preliminary/Final Drainage Report for Meridian Ranch Filing 4B, The Shops at Meridian Ranch* (the REPORT) prepared by Tech Contractors, dated April 2014, and approved on September 9, 2014. The REPORT provides hydrologic and hydraulic analysis for the development located at the northeast corner of Meridian Road and Stapleton Drive in El Paso County, Colorado.

Background

Lot 4 approximately 3.4 acres in size and is located near the southeast corner of Tourmaline Dr. and Meridian Rd. The lot was originally graded with development of Meridian Ranch Filing 4B in 2014 and slopes generally in a southeasterly direction toward Fleece Flower Way and the main roadway for the Shops development.

The first phase of commercial construction occurred within Lot 3, which included the utility and private storm drain system and the construction of the main roadway through the commercial center and the development of Lot 3 of The Shops Filing 1 at Meridian Ranch. A drainage letter showing Lot 3's compliance with the REPORT was approved by the County on August 20, 2015.

The REPORT anticipated runoff from the commercial areas, collectively referred to as The Shops (Lots 1-4, The Shops Filing 1 at Meridian Ranch), to be discharged to the storm drain system constructed as a part of Meridian Ranch Filing 4B. Said storm sewer system will ultimately discharge developed flows from Filing 4B, including The Shops, to the main stem of the Bennett Ranch Channel then convey the flow downstream to the Bennett Regional Detention Pond. The Bennett Regional Detention Pond was designed and constructed as a regional facility providing detention and water quality for all areas within the Bennett Ranch Drainage Basin within the Woodmen Hills Filings 10 & 11 and Meridian Ranch including the flows from The Shops Filing 1 at Meridian Ranch. The Bennett Pond has been adequately sized such that 100 YR developed will be detained and released at (or below) the pre-developed flow rate for the same event.

Water Quality

When regional water quality capture volume facilities are present, BMPs are still required onsite to address water quality and channel stability for the reach of the drainageway upstream of the regional facility. In accordance with MS4 permits and regulations, BMPs must be implemented prior to discharges to a State Water from areas of "New Development and Significant Redevelopment." Therefore, if a regional BMP is utilized downstream of a discharge from a development into a State Water, additional BMPs are required to protect the State Water between the development site and the regional facility. However, these BMPs may not have to be as extensive as would normally be required, as long as they are adequate to protect the State Water upstream of the regional BMP.

Additional water quality is provided by applying the 'Applicable Development Site Draining to a Regional WQCV Facility' rule (20%/10% Rule) found in Part 4.a.IV.A.1 Control Measure Requirements of the El Paso County MS4 Program. The regional WQCV facility is designed to accept drainage from the applicable development site. Stormwater from the site may discharge to a water of the state before being discharged to the regional WQCV facility. Before discharging to a water of the state, 20 percent of the total impervious surface of the applicable development site must first drain to a control measure covering an area equal to 10 percent of the total impervious surface of the applicable development site. The control measure must be designed in accordance with a design manual identified by the permittee. In addition, the stream channel between the discharge point of the applicable development site and the regional WQCV facility must be stabilized.

The project site meets or exceeds the requirements listed above in that the roof top areas discharge to grass lined swales prior to entering into the storm drain system. The storm drainage system is then routed through Meridian Ranch Filing 4b and passes through the SNOUT then is discharged into a stabilized stream channel prior to entering the downstream WQCV facility located within the Bennett Ranch Regional Detention Pond.

The total roof top area of the proposed buildings is 34,120 SQ. FT or 25.3% of the total impervious surface area of the project site. The two buildings discharge the storm runoff to grass lined swales via the roof drains. The total grass lined swale area is 16,735 SQ. FT. or 12.4% of the total impervious surface area of the project site. Please see the Water Quality Exhibit A for a graphic representation of the site.

The BMP SNOUT stormwater quality system was installed with the construction of the storm drain system for Meridian Ranch Filing 4b to meet the initial water quality protection prior to releasing the flow to the State Water in the Bennett Channel. The SNOUT reduces gross pollutants such as floatables and trash as well as free oils and sediments. The SNOUT meets or exceeds the requirement to the Maximum Extent Practicable to prevent "pollution of the receiving waters in excess of the pollution permitted by an applicable water quality standard or applicable antidegradation requirement." The SNOUT is an approved BMP by the EPA. The SNOUT is owned and maintained by the Meridian Service Metropolitan District.

By applying the 20%/10% Rule for regional WQCV facilities and with the addition of the BMP SNOUT stormwater quality system, this project meets or exceeds the requirements for water quality.

Drainage Analysis

The anticipated developed flows from The Shops were accounted for in two basins within the REPORT; basin 4 and basin 9. The flows from basin 4 originate from the Shops on-site flows and were expected to discharge directly into the previously- constructed Filing 4B storm drain system via pipe (Design Point X01). The off-site flows are from basin 9 were expected to be captured by an existing 15' Type R inlet located near the intersection of Meridian Ranch Blvd & Stapleton Dr.

The analysis completed for the initial phase of the Shops, Lot 3 along with portions of the adjacent roadways, showed 35 cfs during the 5 YR event and 68 cfs for the 100 YR event for the on-site flows discharged to the pipe connection at design point X01.

The storm drainage analysis for this phase of the Shops Filing 1 at Meridian Ranch yields a 5 YR event flow of 29 cfs and 58 cfs for the 100 YR at the pipe connection at design point X01 entering Meridian Ranch Filing 4B. A comparison of the different flow rates from the various drainage studies can be found in the table below.

Table 1 Design Flow Rates for Design Point X01

	Minor Storm (5-yr/10-yr)	Major Storm (100-yr)
Filing 4B/The Shops - FDR, 2014	38	70
The Shops, Lot 3 - Drainage Letter, 2015	35	68
The Shops, Lot 4 - Drainage Letter, 2018	29	58

This letter shows the development of Lot 4 of the Shops Filing 1 at Meridian Ranch is in substantial conformance with the original Final Drainage Report for the Shops Filing 1 and will not adversely impact downstream facilities, as those facilities were designed to convey developed flows from all areas within The Shops. Upon full build-out of The Shops (according to the planned layout of Lot 4, the existing layout of Lot 3 & the conceptual layout of Lots 1 & 2) as presented in the attached Developed Drainage Basin map), the resulting developed flows will be less than the REPORT's expected flows at Design Point X01.

Drainage and Bridge Fees

There are no Drainage and Bridge Fees with this project as the fees were paid at the time of the recordation of the Shops Filing 1 at Meridian Ranch on August 12, 2015.

Drainage Calculations

COMPOSITE 'C' FACTORS

PROJECT: **Lot 4, Shops Filing 1** 1/2/2019

BASIN LABEL	DEV.	AREA (AC.) UNDEV	2.5 AC	1 DU/AC	2 DU/AC	TOTAL	COMPOSITE FACTOR 5-year	100-year	Percent Impervious
BASIN DESIGNATION		AREA (AC.) UNDEV	PAVEMENT	ROOF	LAWN	TOTAL	COMPOSITE FACTOR 5-year	100-year	Percent Impervious
Basin 4, Filing 4B/ Shops Filing 1 FDR	A	From Lot 3, Shops Filing 1 at Meridian Ranch Drainage Letter by Olsson Associates, Dated May 7, 2015 Approved August 20, 2015				1.97	0.55	0.70	
	B					1.08	0.47	0.65	
	C					2.25	0.78	0.89	
	E					1.29	0.78	0.89	
	F					0.22	0.78	0.86	
	G		**0.06**		**0.11**	**0.17**	**0.38**	**0.57**	
	H		**0.84**	**0.34**	**0.40**	**1.58**	**0.66**	**0.77**	
	I-1		**1.58**		**0.42**	**2.00**	**0.73**	**0.83**	
	I-2		**0.06**	**0.40**	**0.32**	**0.78**	**0.48**	**0.63**	
	J	From Lot 3, Shops Filing 1 at Meridian Ranch Drainage Letter by Olsson Associates, Dated May 7, 2015 Approved August 20, 2015				1.30	0.79	0.91	
	K					0.83	0.79	0.87	
	L					1.19	0.73	0.84	
	N					0.41	0.35	0.65	
OS-1						6.22	0.60	0.73	
OS-2						0.69	0.71	0.81	
TOTAL			2.54	0.74	1.25	15.8	**0.67**	**0.80**	**90.0%**

TIME OF CONCENTRATION

Rational Calculations

PROJECT: **Lot 4, Shops Filing 1** DATE: 1/2/2019

TIME OF CONCENTRATION																
SUBBASIN DATA			INIT./OVERLAND TIME (T_i)				TRAVEL TIME (T_t)						TOTAL	Tc Check (Urbanized Basins)		FINAL T_c
BASIN DESIGNATION	C_5	AREA (AC)	LENGTH (FT)	ΔH	SLOPE %	Ti (Min.)*	LENGTH (FT)	ΔH	SLOPE %	CONVEYANCE TYPE	VEL. (FPS)**	Tt(Min.)***	Ti+Tt(Min.)	L (FT)	Tc = (L/180) + 10	(min)
A	0.55	1.97	From Lot 3, Shops Filing 1 at Meridian Ranch Drainage Letter by Olsson Associates, Dated May 7, 2015 Approved August 20, 2015													**12.4**
B	0.47	1.08														**6.7**
C	0.78	2.25														**7.3**
E	0.78	1.29														**6.3**
F	0.78	0.22														**5.5**
G	**0.38**	**0.17**	**71**	**6.0**	**8.5%**	**5.4**	**75**	**1**	**1.0%**	**p**	**2.0**	**0.6**	**6.1**	**146.00**	**10.8**	**6.1**
H	**0.66**	**1.58**	**50**	**2.0**	**4.0%**	**3.6**	**752**	**17**	**2.3%**	**p**	**3.0**	**4.2**	**7.8**	**802.00**	**14.5**	**7.8**
I-1	**0.73**	**2.00**	**87**	**3.5**	**4.0%**	**4.0**	**575**	**14**	**2.3%**	**P**	**3.1**	**3.1**	**7.1**	**662.00**	**13.7**	**7.1**
I-2	**0.48**	**0.78**	**42**	**5.5**	**13.1%**	**3.1**	**307**	**4**	**1.1%**	**L**	**0.7**	**6.8**	**10.0**	**349.00**	**11.9**	**10.0**
J	0.79	1.30	From Lot 3, Shops Filing 1 at Meridian Ranch Drainage Letter by Olsson Associates, Dated May 7, 2015 Approved August 20, 2015													**7.4**
K	0.79	0.83														**7.0**
L	0.73	1.19														**7.8**
N	0.35	0.41														**11.3**
OS-1	0.60	6.22														**11.3**
OS-2	0.71	0.69														**20.8**

Notes:

$* \; Ti = 0.395(1.1-C_5)L^{0.5}/S^{0.33}$

$** V=C_v S_w^{0.5}$

*** Tt = L/V

TYPE OF SURFACE		C_V
HEAVY MEADOW	H	2.5
TILLAGE/FIELD	T	5
RIPRAP (not buried)	R	6.5
SHORT PASTURE AND LAWNS	L	7
NEARLY BARE GROUND	B	10
GRASSED WATERWAY	G	15
PAVED AREAS	P	20

STORM DRAINAGE SYSTEM DESIGN
(RATIONAL METHOD PROCEDURE)
SURFACE ROUTING

PROJECT: **Lot 4, Shops Filing 1**

Date: 1/2/2019

DESIGN POINT	BASIN	AREA (AC)	Tc (Min.)	DIRECT RUNOFF I (in./ hr.) (5 YR)	I (100 YR)	COEFF. © (5 YR)	(100 YR)	CA (5 YR)	(100 YR)	Q (5 YR)	(100 YR)	TOTAL RUNOFF Sum Tc (min.)	I (in./ hr.) (5 YR)	(100 YR)	CA (5 YR)	(100 YR)	Q (5 YR)	(100 YR)	OVERLAND TRAVEL TIMI DESTINATION DP	CONVEYANCE TYPE	COEFFICIENT C_V	SLOPE %	VEL. (FPS)
1	A	1.97	12.4	3.81	6.39	0.55	0.70	1.08	1.38	4.1	8.8						**4.1**	**8.8**					
2	B	1.08	6.7	4.73	7.94	0.47	0.65	0.51	0.70	2.4	5.6						**2.4**	**5.6**					
3	C	2.25	7.3	4.60	7.73	0.78	0.89	1.76	2.00	8	15						**8.1**	**15**					
11	E	1.29	6.3	4.82	8.10	0.78	0.89	1.01	1.15	4.9	9.3	22.6	2.90	4.87	1.50	1.71	**4.9**	**9.3**					
6	F	0.22	5.5	5.03	8.44	0.78	0.86	0.17	0.19	0.9	1.6						**0.9**	**1.6**					
7	**G**	**0.17**	**6.1**	**4.88**	**8.19**	**0.38**	**0.57**	**0.07**	**0.10**	**0.3**	**0.8**						**0.3**	**0.8**					
8	**H**	**1.58**	**7.8**	**4.50**	**7.56**	**0.66**	**0.77**	**1.04**	**1.22**	**4.7**	**9.3**						**4.7**	**9.3**					
DP1	**I-1**	**2.00**	**7.1**	**4.63**	**7.78**	**0.73**	**0.83**	**1.45**	**1.66**	**6.7**	**13**						**6.7**	**13**	**8**	**P**	**20.0**	**1.20%**	**2.2**
8												**7.8**	**4.50**	**7.56**	**2.49**	**2.89**	**11**	**22**					
CB1	**I-2**	**0.78**	**10.0**	**4.13**	**6.93**	**0.48**	**0.63**	**0.37**	**0.49**	**1.5**	**3.4**						**1.5**	**3.4**					
10	J	1.30	7.4	4.58	7.69	0.79	0.91	1.03	1.18	4.7	9.1						**4.7**	**9.1**					
5	K	0.83	7.0	4.66	7.83	0.79	0.87	0.66	0.72	3.1	5.7						**3.1**	**5.7**					
12	L	1.19	7.8	4.50	7.56	0.73	0.84	0.87	1.00	3.9	7.6						**3.9**	**7.6**					
14	N	0.41	11.3	3.95	6.62	0.35	0.65	0.14	0.27	0.6	1.8						**0.6**	**1.8**					
OS	OS-1	6.22	11.3	3.95	6.62	0.60	0.73	3.73	4.54	15	30						**15**	**30**					
DP2	OS-2	0.69	20.8	3.03	5.09	0.71	0.81	0.49	0.56	1.5	2.8						**1.5**	**2.8**	11	P	20.0	3.25%	3.6

TYPE OF SURFACE		C_V
HEAVY MEADOW	H	3
TILLAGE/FIELD	T	5
RIPRAP (not buried)	R	7
SHORT PASTURE AND LAWNS	L	7
NEARLY BARE GROUND	B	10
GRASSED WATERWAY	G	15
PAVED AREAS	P	20

STORM DRAINAGE SYSTEM DESIGN
INLET CALCULATIONS

PROJECT: **Lot 4, Shops Filing 1**

							Q_{Total}		$Q_{Capture}$				$Q_{Flow-by}$		
DP	Inlet size L(i)	Proposed or Existing	INLET TYPE	CROSS SLOPE	STREET SLOPE	T_c	Q_5 (cfs)	Q_{100} (cfs)	Q_5 (cfs)	Q_{100} (cfs)	$CA_{eqv.}$ (10-yr)	$CA_{eqv.}$ (100-yr)	Q_5 (cfs)	Q_{100} (cfs)	$CA_{eqv.}$ (10-yr)
7	5	EXIST	SUMP	2.0%		6.1	0.3	0.8	0.3	0.8	0.07	0.10	-	-	-
8	15	EXIST	SUMP	2.0%		7.8	11.2	22	11.2	22	2.49	2.89	-	-	-
CB1	TYPE C	EXIST	SUMP	2.0%		10.0	1.5	3.4	1.5	3.4	0.37	0.49	-	-	-

STORM DRAINAGE SYSTEM DESIGN
(RATIONAL METHOD PROCEDURE)
PIPE ROUTING

PROJECT: **Lot 4, Shops Filing 1**

UPSTREAM DESIGN POINT	PIPE DESIGNATION	UPSTREAM BASIN	INLET FLOW							SYSTEM FLOW							PIPE DIA
				I (in./ hr.)		CA		Q			I (in./ hr.)		CA		Q		
			Tc (Min.)	(5 YR)	(100 YR)	(5 YR)	(100 YR)	(5 YR)	(100 YR)	Sum Tc (min.)	(5 YR)	(100 YR)	(5 YR)	(100 YR)	**(5 YR)**	**(100 YR)**	
7	P-09	G	6.1	4.88	8.19	0.07	0.10	0.3	0.8						0.3	0.8	18
8	P-08		7.8	4.50	7.56	2.49	2.89	11.2	21.8	7.8	4.50	7.56	2.56	2.99	12	23	24
CB1	P-16	I-2	10.0	4.13	6.93	0.37	0.49	1.5	3.4						1.5	3.4	18
J1	P-07									10.1	4.11	6.90	2.93	3.48	12	24	24
11	P-19	E	22.6	2.90	4.87	1.50	1.71	4.3	8.3						4.3	8.3	18
14	P-20	N	11.3	3.95	6.62	0.17	0.19	0.7	1						0.7	1.3	18
J2	P-06									22.8	2.89	4.85	4.60	5.37	13	26	30
10	P-05	J	7.4	4.58	7.69	1.03	1.18	4.7	9.1	23.6	2.84	4.77	5.62	6.56	16	31	30
12	P-17	L	7.8	4.50	7.56	0.87	1.00	3.9	7.6						3.9	7.6	18
6	P-15	F	5.5	5.03	8.44	0.17	0.19	0.9	1.6	8.0	4.47	7.51	1.04	1.19	4.7	8.9	18
5	P-14	K	7.0	4.66	7.83	0.66	0.72	3.1	5.7	8.0	4.46	7.48	1.70	1.91	7.6	14	18
MH-7	P-13									8.1	4.44	7.45	1.70	1.91	7.5	14	18
MH-3	P-04									23.8	2.83	4.74	7.32	8.47	21	40	30
3	P-11	C	7.3	4.60	7.73	1.76	2.00	8.1	15.5						8	15	24
2	P-10	B	6.7	4.73	7.94	0.51	0.70	2.4	5.6	7.5	4.56	7.66	2.26	2.70	10	21	24
MH-2	P-03									24.2	2.80	4.71	9.58	11.17	27	53	36
MH-1	P-02									24.6	2.78	4.66	9.58	11.17	27	52	36
X01	**P-01**	**A**	**12.4**	**3.81**	**6.39**	**1.08**	**1.38**	**4.1**	**8.8**	**25.2**	**2.74**	**4.61**	**10.67**	**12.55**	**29**	**58**	**42**
Filing 4B		J03	21.2	3.00	5.04	4.11	4.68	12	24	25.2	2.74	4.60	14.78	17.23	40	79	48

APPENDIX

Appendix A – Water Quality

Temporary Sedimentation Basin Calculations

THE SHOPS AT MERIDIAN RANCH GRADING

TEMPORARY SEDIMENTATION SIZING

TEMP POND

Tributary Area:	Required Volume	Depth at Outlet
1.9 ac.	0.08 ac-ft	2.1 ft.

Area required per Row

0.2 in^2

WS Elev: 7083.1

No. of columns	Hole size
1	1/2 in

STAGE			STORAGE			
STAGE	ELEV	HEIGHT	AREA		VOLUME	
			sqft	acre	acft	cum acft
1	7081	0	5	0.000	0.000	0.00
2	7081.5	0.5	610	0.01	0.00	0.00
3	7082	1	2050	0.05	0.02	0.02
4	7082.5	1.5	2380	0.05	0.03	0.04
5	7083	2	2710	0.06	0.03	0.07
6	7083.5	2.5	9655	0.22	0.07	0.14

TABLE SB-2							
Minimum steel thickness		**1**	2	3	4	5	6
		1/4	5/16	3/8	3/8	3/8	1/2
1/2	0.5000	**0.20**	0.39	0.59	0.79	0.98	1.18
9/16	0.5625	0.25	0.50	0.75	0.99	1.24	1.49
5/8	0.6250	0.31	0.61	0.92	1.23	1.53	1.84
11/16	0.6875	0.37	0.74	1.11	1.48	1.86	2.23
3/4	0.7500	0.44	0.88	1.33	1.77	2.21	2.65
13/16	0.8125	0.52	1.04	1.56	2.07	2.59	3.11
7/8	0.8750	0.60	1.20	1.80	2.41	3.01	3.61
15/16	0.9375	0.69	1.38	2.07	2.76	3.45	4.14
1	1.0000	0.79	1.57	2.36	3.14	3.93	4.71
1 1/16	1.0625	0.89	1.77	2.66	3.55	4.43	5.32

Appendix B – Water Quality

from the
Approved Preliminary/Final Drainage Report
for
Meridian Ranch Filing 4b
The Shops at Meridian Ranch Filing 1

STRUCTURE DESIGN FOR WATER QUALITY IMPROVEMENT

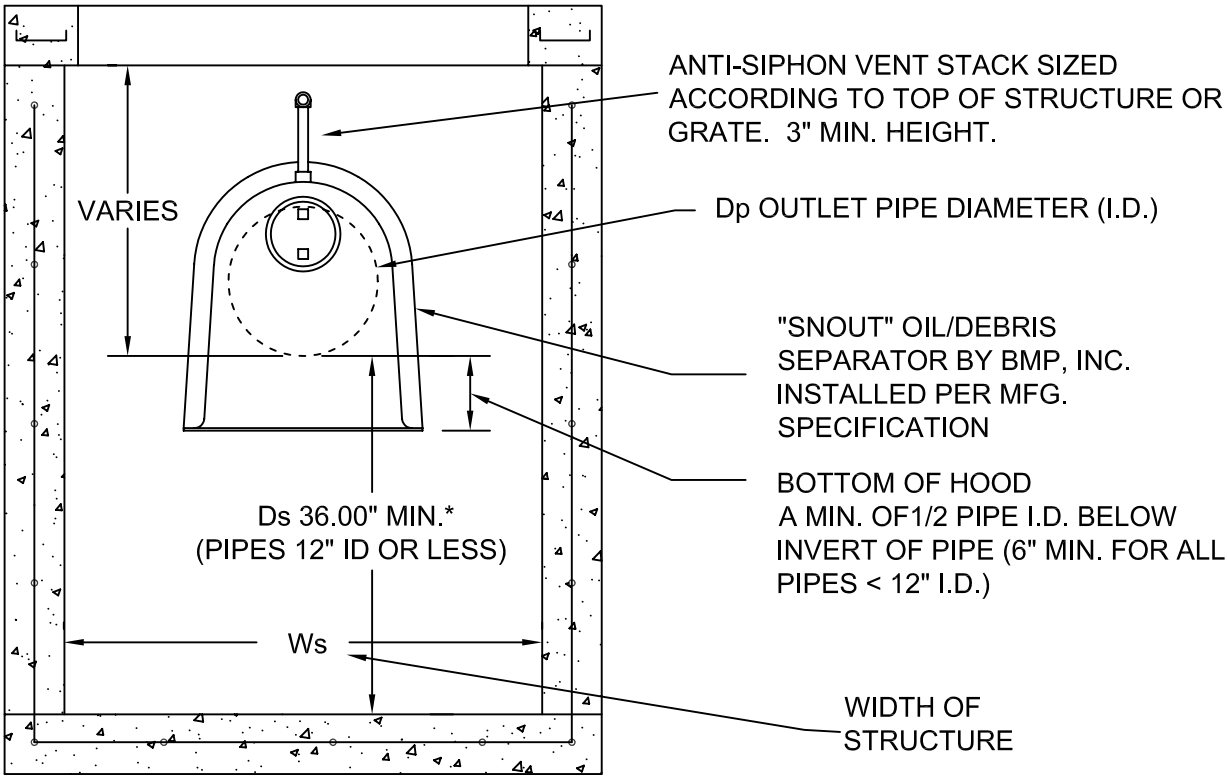

RULE # 1- AT AN ABSOLUTE MINIMUM, STRUCTURE INTERNAL DIMENSIONS MUST BE AT LEAST LARGE ENOUGH TO ACCOMODATE EXTERNAL DIMENSIONS OF THE SNOUT, AND ALLOW FOR A PERSON TO INSTALL IT. REFER TO BMP, INC. CAD DETAILS FOR PART DIMENSIONS. BMP RECOMMENDS STRUCTURE WALL TO BE AT LEAST 12" WIDER THAN MAXIMUM SNOUT WIDTH. FOR TRASHSCREEN, STRUCTURE MUST BE AT LEAST 6" WIDER THAN TRASHSCREEN WIDTH.

RULE #2- USE ONLY "F" SERIES SNOUTS FOR RECTANGULAR OR SQUARE STRUCTURES, AVAILABLE IN 12", 18", 24", 30", 36", 48", 72" AND 96" SIZES. USE ONLY "R" SERIES SNOUTS FOR ROUND STRUCTURES, AVAILABLE IN 12", 18", 24", 30", 42", 52" AND 72" SIZES.

***SUMP DEPTH (Ds)-** SUMP DEPTH SHOULD BE A MINIMUM OF 36" FOR ANY NEW CONSTRUCTION FOR PIPES 12" AND LESS. FOR 15"-18" PIPE MIN. DEPTH SHOULD BE 48". OPTIMAL SIZING IS AT LEAST 2.5X TO 3X OUTLET PIPE DIAMETER (Dp) FOR MAXIMUM POLLUTANT REMOVAL EFFICIENCY AND MINIMAL CLEANOUT FREQUENCY.

STRUCTURE DIMENSIONS- PLAN DIMENSIONS FOR A STRUCTURE SHOULD BE UP TO 7X AREA OF OUTLET PIPE FOR MAXIMUM POLLUTANT REMOVAL EFFICIENCY AND MINIMAL CLEANOUT FREQUENCY. FOR MANHOLES, SEE SIZING EXAMPLES BELOW FOR "R' SERIES SNOUTS.

IMPORTANT NOTICE: *DO NOT CONFUSE PIPE O.D WITH PIPE I.D.* A SNOUT FITS OVER A PIPE, NOT IN IT. THUS, SNOUT MUST BE SIZED TO FIT OVER PIPE OPENING IN STRUCTURE. SNOUTS ARE AVAILABLE FOR ROUND STRUCTURES TO ACCOMODATE PIPES OF 71.9" O.D. MAX. FOR PIPES 72" O.D. AND ABOVE, USE SQUARE OR RECTANGULAR STRUCTURES.

SIZING EXAMPLES:

OUTLET HOLE SIZE	SNOUT SIZE
11.9" O.D. OR LESS	12 F or R (R FITS 36"-48" DIAM STRUCTURE)
12.0"-17.9" O.D.	18 F or R (R FITS 48"-60" DIAM STRUCTURE)
18.0"-23.9" O.D.	24 F or R (R FITS 48"-60" DIAM STRUCTURE)
24.0"-29.9" O.D.	30 F or R (R FITS 60"-72" DIAM STRUCTURE)
30.0"-35.9" O.D.	36FTB
30.0"-41.9" O.D.	42RTB/60 (FITS 60" DIAM STRUCTURE ONLY)
30.0"-47.9" O.D.	48 FTB
30.0"-51.9" O.D.	52RTB/72 (FITS 72" DIAM STRUCTURE ONLY)
48.0"-71.9" O.D.	72FTB OR 72RTB/96 (FITS 96" DIAM STRUCTURE ONLY)
72"-95.9" O.D.	96 FTB

NPSNOUT (FOR SMALL ID STRUCTURES)

UP TO 12" PIPE IN 18" ID STRUCTURE NP1218
UP TO 15" PIPE IN 24" ID STRUCTURE NP1524
UP TO 18" PIPE IN 30" ID STRUCTURE NP1830
UP TO 24" PIPE IN 30" ID STRUCTURE NP 2430

BMP, INC.
53 MT. ARCHER ROAD, LYME, CT. 06371
(800) 504-8008 FAX: (860)434-3195

DESCRIPTION	DATE	SCALE
SNOUT SIZING CHART	09/09/05	NONE
	DRAWING NUMBER	
	SP-SI	

Maximum Utility for Minimum Cost:
Simple Structural Methods for Stormwater Quality Improvement

T. J. Mullen
President, Best Management Products, Inc.

Abstract

Stormwater runoff is characterized by the United States Environmental Protection Agency as "one of the greatest remaining sources of water pollution" in America (United States Environmental Protection Agency, November 1999). Thus, efforts to implement stormwater quality improvement regulations are accelerating across the United States, compelling municipalities and land developers to maximize the usefulness of stormwater infrastructure as never before. With simple modifications to current designs, common catch basins and other stormwater structures can be more effectively utilized as pollution control devices, rather than merely as a way to move stormwater. Future systems must drain runoff which can not be infiltrated to areas where it can be appropriately managed, and simultaneously, reduce the environmental impact of the ultimate discharge to the receiving waters. Adding a deep sump to catch basins, a common feature in some areas of the country, has been shown to remove some sediments and gross particles. As an additional benefit, these structures allow the use of an outlet hood or baffle, which can drastically reduce the discharge of floatable debris and trash, and aid in the removal of free oil and grease. This "cleaner" runoff can also extend the service life of a traditional stormwater detention facility, such as a pond, or a retention facility, such as a groundwater recharge area. This paper addresses a group of low-cost components which comprise the SNOUT® Stormwater Quality Control System, manufactured by Best Management Products, Inc. (BMP, Inc.) The applications include a deep sump catch basin with an outlet hood, a structure with an outlet hood and flow restrictor, structures configured to bypass high flows, and outlet controls which can accommodate extreme flow conditions while retaining captured pollutants.

Background

Catch basins, stormwater inlets, and other specialized structures have a long history of use as part of municipal separate storm sewer systems (MS4s) in controlling stormwater runoff. So too have the many devices used with them to aid in the removal of pollutants, such as grates, traps, hoods, and sumps. With the aid of new appurtenances based on older concepts, these simple structures are being more effectively used and maintained as a first line of defense against non-point source pollution in urbanized areas to improve stormwater quality.

In its simplest form, a stormwater inlet's primary function is to intercept sheet flows in order to prevent the accumulation of stormwater in an area where flooding could impede traffic or pedestrians, cause property damage, or otherwise present a nuisance. However, these inlets to MS4s or combined sewer systems (CSSs) are often the entry point of pollutants from diffuse sources found in stormwater runoff. As a result, pollution is often discharged untreated, directly into our surface waters.

The use of deep sumped structures, as part of the stormwater system along with simple components essentially creates numerous "micro-detention" nodes throughout a stormwater conveyance, and allows moderate levels of pollutants to be captured in an economical manner. Typically, this method requires much lower on-going maintenance needs than traditional "tray-type" catch basin inserts or baskets, and a significantly lower capital cost than most "end-of-pipe" controls. Further, the ability of sufficiently sumped structures to intercept gross-pollutants and finer particles such as suspended solids (SS) has been well documented. A recent study in New Jersey found an average SS capture rate of 32 percent over several storm events (Pitt and Field, 1998).

Capture of trash, floatables and other gross-pollutants have also been widely recognized as a benefit of an inlet with a hood. A 1995 study of New York City catch basins compared the relative effectiveness of structures with and without hoods. The hooded structures captured 85 percent of the litter that entered the combined sewer inlets compared to 30 percent for the catch basins without hoods (New York City Department of Environmental Protection, 1995, cited in EPA Doc. 832-F99-008 September 1999). With the nation's first Total Maximum Daily Load (TMDL) for trash being established for the Los Angeles River Basin, calls for reductions in gross-pollutant loading in other areas are also expected to follow (Will Shuck, Long Beach Press-Telegram, 2001).

Until recently, the devices available for use as hoods or traps were mainly limited to metal hoods, metal or PVC elbows, and tees. While many of these devices have been in service for decades, little design effort was given to these appurtenances in terms of pollutant removal performance, hydraulic efficiency, or ease of installation. That situation has changed with a product line available from Best Management Products, Inc. of Lyme, CT, which transforms the basic hood or trap concept into a high performance, multi-task stormwater quality and quantity control system. This system, the SNOUT® Stormwater Quality Control System (US Patent # 6126817), uses vented plastic-composite hoods and related components to improve water quality and control flow quantity.

System Advantages

- SNOUT® hoods use an oil tight gasket sealing system around perimeter of unit.
- Anti-siphon vent prevents pollutants from being drawn downstream in full flows.
- Watertight access port allows easy pipe inspection and maintenance.
- Light Weight/High Strength composite construction is durable and easy to install.
- Sizes to fit over outlet pipes up to 96" outside diameter.
- Highly flexible low-cost component system with a variety of accessories including Flow Restrictors, Oil Absorbents, Flow Diffusers, and Odor Filters.
- SNOUT® components can be used to construct a wide variety of stormwater quality structures including those with high flow bypass, swirl chambers, and outlet flow control.
- Use of sumps and SNOUT® hoods keeps pipes cleaner, thus reducing pipe maintenance.

Since this system became commercially available in 1999, nearly 4,000 SNOUT® hoods have been installed. Initial results have been quite favorable. SNOUT® systems have been or will be installed as part of research or monitoring projects in the following locations:

Washington, D.C., Navy Yard, Center for Low Impact Development

Bryn Mawr, PA, Regional Stormwater Facility, Yerkes Associates, Designer
City of Kitchener, ON, City Maintenance Yard, City of Kitchener Environmental Services
Beaverton, OR, Clean Water Services (formerly known as United Sewerage Agency)
*Harvey's Lake, PA, Harvey's Lake Demonstration Project, PA DEP, and Princeton Hydro, LLC

* Winter/Spring of 2002

Data collected from these and other projects will be incorporated on an on-going basis on the BMP, Inc. website at www.stormwaterbmps.com, along with selected case studies and photos from a variety of projects.

Applications

A variety of applications and SNOUT® system configurations exist in the field. Each has its advantages and disadvantages, which are outlined below. These systems include:

Catch Basin with an Outlet Hood- This is the most basic application. This system combines a sumped catch basin with a hood. It is useful for capturing trash and floatables, and modest levels of free oils, and sediment. These structures can be inlet-only, or in-line with other structures. To increase oil retention, oil absorbent booms can be placed in the structure. This application has limitations based primarily on the volume and sump depth of the structure itself. To minimize re-suspension of finer captured solids, a deep sump, with a minimum depth of 4 feet, or a depth equal to 3X the outlet pipe inside diameter is recommended. (see Figure 1)

Catch Basin with a Hood and Flow Restrictor- This application is useful for limiting the discharge rates down stream. A micro-detention node can be created using a flow restrictor, making use of the storage volume in pipes upstream or ponding areas above the inlet. It is also used in outlet structures in detention basins. Discharge rates can be accurately controlled by slot or orifice dimensions in the riser pipe shielded inside a SNOUT® hood, making it very difficult to clog. Structure must receive periodic maintenance to ensure that sediment accumulation does not reach entrance to riser pipe. (see Figure 2)

Structures in Series with Oil Absorbents and Diffuser Plates- This application is intended for use as a terminal structure on a site where higher than normal pollutant loads may be present. Stormwater makes a "multiple pass" through deep sump structures with hoods and accessories. Accessories include oil absorbent booms for increased oil retention, and diffuser plates for increased solids removal. This application is also an excellent pre-treatment design prior to discharge to a conventional stormwater BMP. Limitations are based primarily on structure sizes, whereby larger structures with deeper sumps will yield better removals. (see Figure 3)

Bypass Structure Configuration- This design combines the features of structures in series, but allows for high flows to be bypassed from the primary treatment structures. All stormwater receives some treatment however, as the terminal structure contains a large SNOUT® hood and a deep sump. Limitations are primarily that multiple structures must be utilized to perform the bypass, but they can be configured in a wide variety of ways such that hydraulic grade lines are maintained. (see Figure 4)

Outlet Structure with Overflow- This design combines accurate outlet control with the SNOUT® flow restrictor as well as an overflow mode that maintains capture of floatable pollutants and trash. Limitations may be based primarily on the outlet structure size, as to accommodate large flows, large size SNOUT® hoods must be used which require large structures that can be costly to build. (see Figure 5)

Cost Savings Note: Structures for all SNOUT® systems are non-proprietary and obtained locally from pre-casters or built in place by local contactors. SNOUT® components and designs are low-cost, but are protected by a US Patent with international patents pending. The combination of low-cost components in non-proprietary structures can reduce overall installed systems costs dramatically.

Following are application drawings of the systems mentioned above:

Figure 1- Catch Basin with Hood

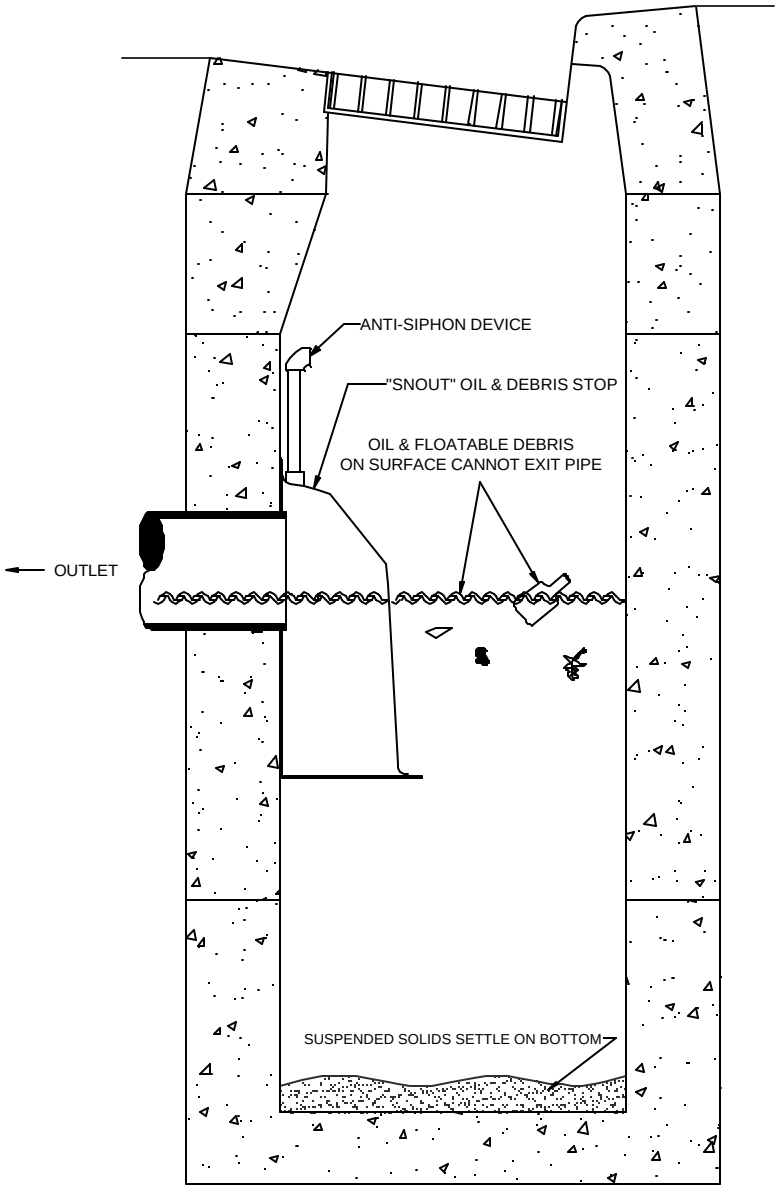

Figure 2- Catch Basin with Hood and Flow Restrictor

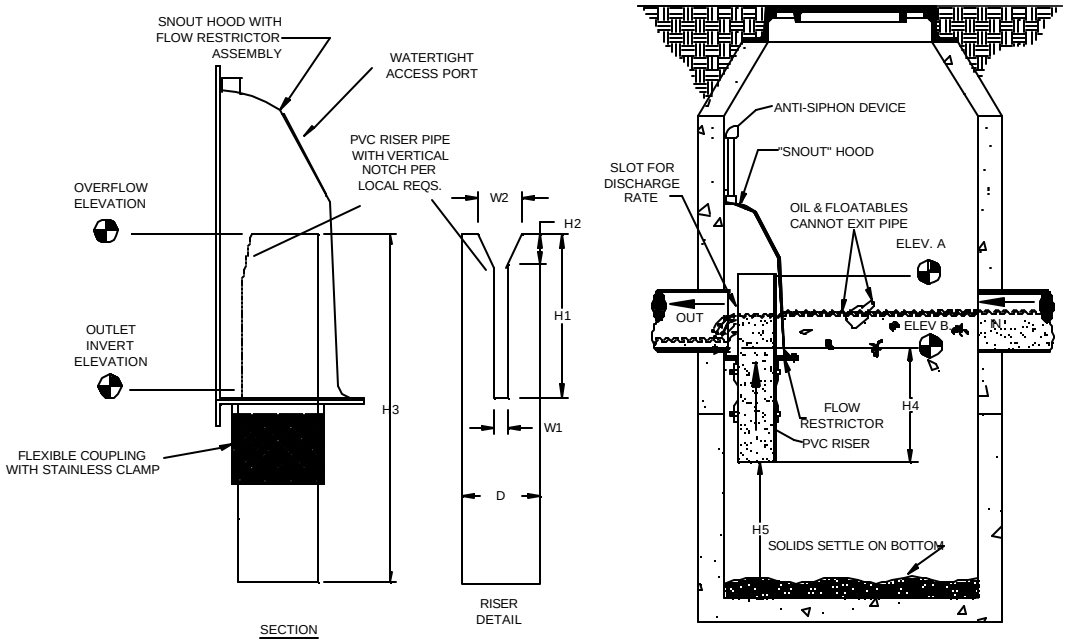

DIMENSION REQUIREMENTS

ELEVATION A:_____ (OVERFLOW)

ELEVATION B:_____ (OUTLET INVERT)

RISER DIMENSIONS

D= RISER ID: _____
W1= SLOT WIDTH: _____
W2= NOTCH WIDTH: _____
H1= SLOT LENGTH: _____
H2= NOTCH LENGTH: _____
H3= RISER LENGTH: _____
H4= SUBMERGE DEPTH: _____ (MIN. 18")
H5= DEPTH TO BOTTOM: _____ (MIN. 24")

HOOD SIZE DETERMINED BY MANUFACTURER BASED ON RISER DIAMETER.

ADDITIONAL SKIRT PIECES AVAILABLE TO INCREASE HEIGHT OF HOOD.

Figure 3- Structures in Series with Oil Absorbents and Diffuser Plates

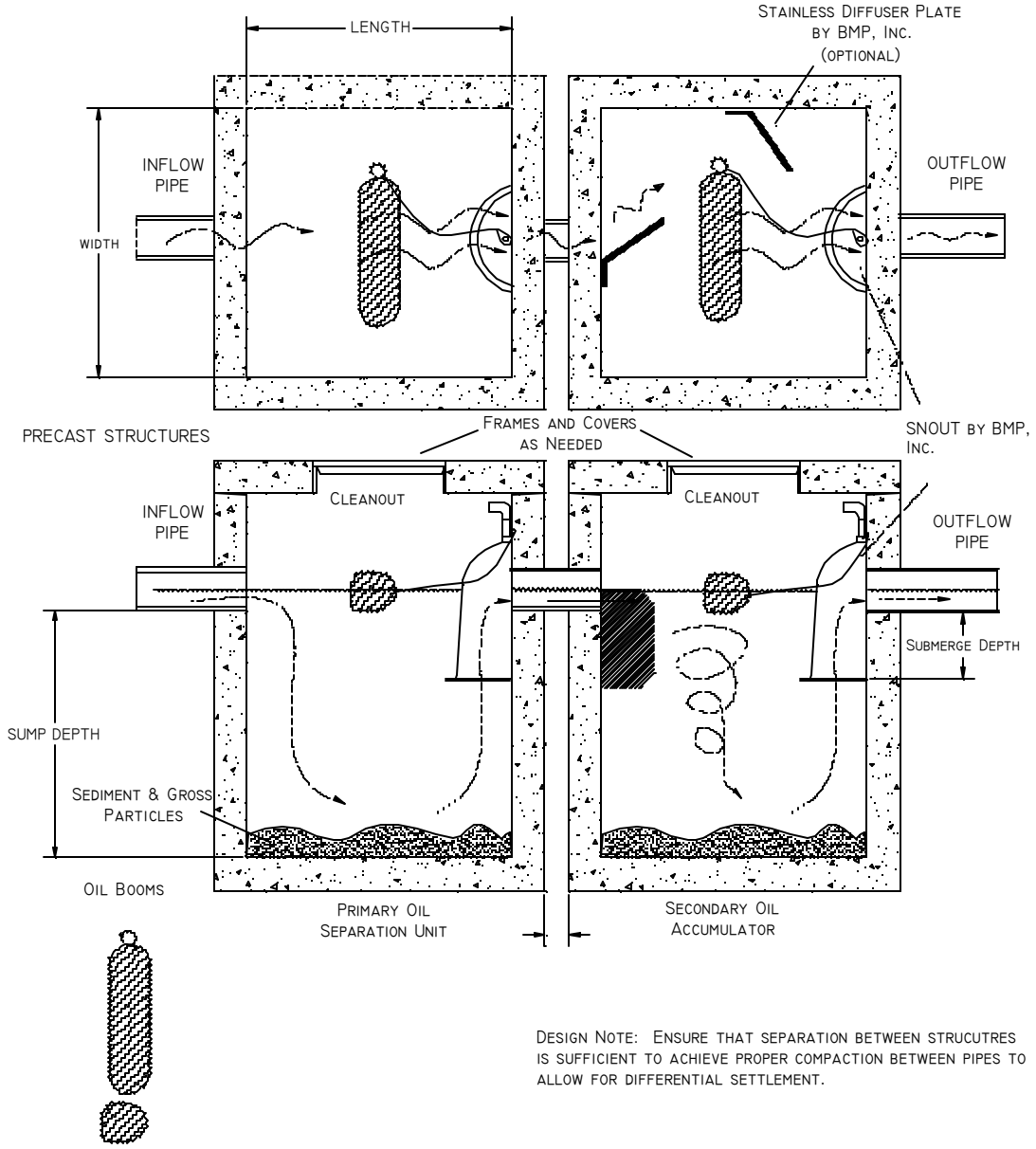

DESIGN NOTE: ENSURE THAT SEPARATION BETWEEN STRUCUTRES IS SUFFICIENT TO ACHIEVE PROPER COMPACTION BETWEEN PIPES TO ALLOW FOR DIFFERENTIAL SETTLEMENT.

Figure 4- Bypass Structure Configuration

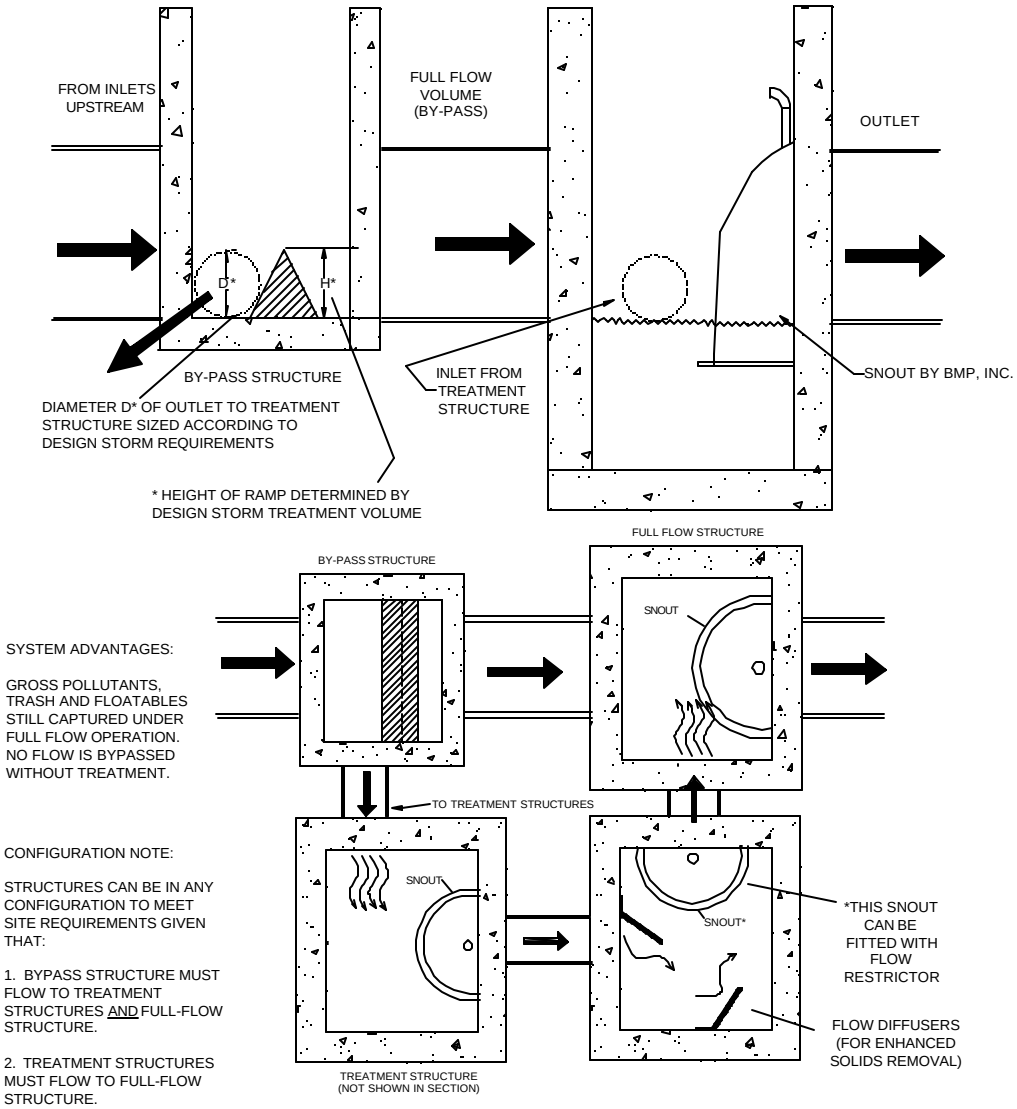

SYSTEM ADVANTAGES:

GROSS POLLUTANTS, TRASH AND FLOATABLES STILL CAPTURED UNDER FULL FLOW OPERATION. NO FLOW IS BYPASSED WITHOUT TREATMENT.

CONFIGURATION NOTE:

STRUCTURES CAN BE IN ANY CONFIGURATION TO MEET SITE REQUIREMENTS GIVEN THAT:

1. BYPASS STRUCTURE MUST FLOW TO TREATMENT STRUCTURES AND FULL-FLOW STRUCTURE.

2. TREATMENT STRUCTURES MUST FLOW TO FULL-FLOW STRUCTURE.

Figure 5- Outlet Structure with Overflow

SYSTEM ADVANTAGES:

FLOW DISCHARGE RATE ACCURATELY CONTROLLED WITHOUT CLOGGING WITH SNOUT FLOW RESTRICTOR

OVERFLOW MODE STILL CONTAINS FLOATING POLLUTANTS

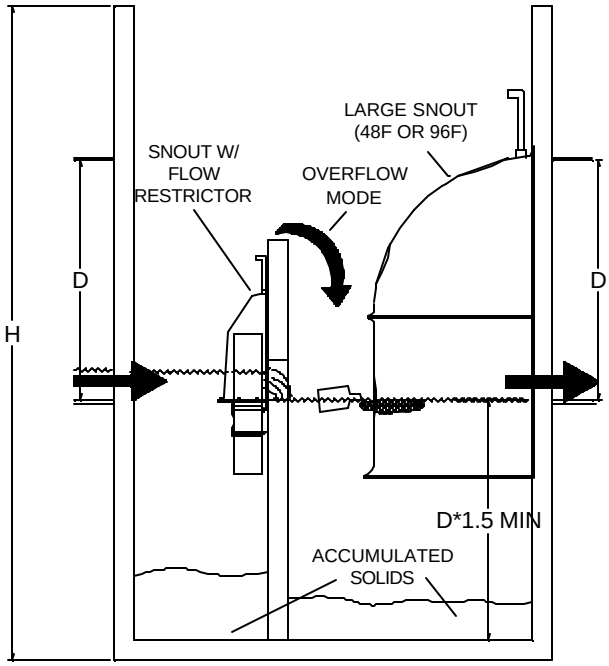

INFLOW FROM POND OR STORMWATER DETENTION FACILITY

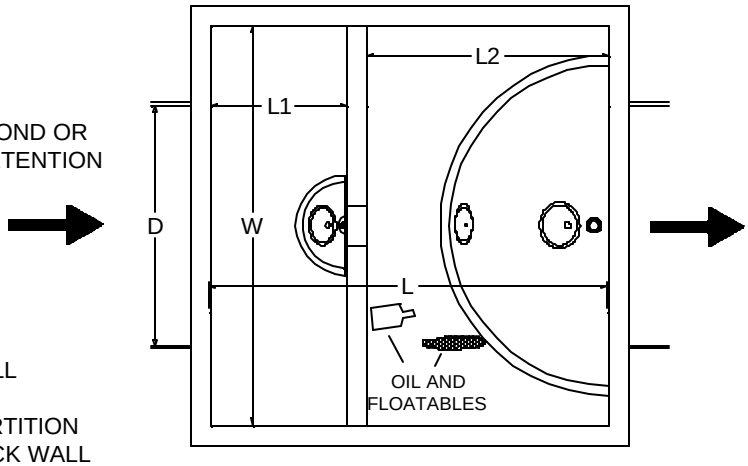

DIMENSIONS:

D= PIPE DIAMETER
H= HEIGHT OVER ALL
L= LENGTH INSIDE
L1= LENGTH TO PARTITION
L2= LENGTH TO BACK WALL
W= WIDTH INSIDE

Design and Maintenance Considerations

The SNOUT® system from BMP, Inc. is based on a vented hood that can reduce floatable trash and debris, free oils, and other solids from stormwater discharges. In its most basic application, a SNOUT® hood is installed over the outlet pipe of a catch basin or other stormwater quality structure which incorporates a deep sump. The SNOUT® forms a baffle in the structure which collects floatables and free oils on the surface of the captured stormwater, while permitting heavier solids to sink to the bottom of the sump. The clarified intermediate layer is forced out of the structure through the open bottom of the SNOUT® by displacement from incoming flow. The resultant discharge contains considerably less unsightly trash and other gross pollutants, and can also offer modest reductions of free-oils and finer solids.

As with any structural stormwater quality BMP, design and maintenance considerations will have a dramatic impact on SNOUT® system performance over the life of the facility. The most important factor to consider when designing structures which will incorporate a SNOUT® is the depth of the sump (the sump is defined as the depth from beneath the invert of the outlet pipe to the bottom of the structure) . Simply put, the deeper the sump, the more effective the unit will be both in terms of pollutant removals and reducing frequency of maintenance. More volume in a structure means more quiescence, thus allowing the pollutant constituents a better chance to separate out. Secondly, more volume means fewer cycles between maintenance operations, because the structure has a greater capacity.

Design Notes:

- As a rule of thumb, BMP, Inc. recommends minimum sump depths based on outlet pipe inside diameters of 2.5 to 3 times the outlet pipe size.
- Special Note for Smaller Pipes: A minimum sump depth of 36 inches for all pipe sizes 12 inches ID or less, and 48 inches for pipe 15-18 inches ID is required if collection of finer solids is desired.
- The plan dimension of the structure should optimally be 6 to 7 times the flow area of the outlet pipe.

Example Calculation:

A SNOUTÒ equipped structure with a 15 inch ID outlet pipe (1.23 sqft. flow area) will offer best performance with a minimum plan area of 7.4 sqft. and 48 inch sump. Thus, a readily available 48 inch diameter manhole-type structure, or a rectangular structure of 2 feet x 4 feet will offer sufficient size when combined with a sump depth of 48 inches or greater.

Therefore, it follows that larger pipe sizes will require larger structures and/or deeper sumps to maintain optimal effectiveness.

As for long term structural maintenance recommendations, BMP, Inc. recommends the following:

- Monthly monitoring for the first year of a new installation after the site has been stabilized.

- Measurements should be taken after each rain event of .5 inches or more, or monthly, as determined by local weather conditions.
- Checking sediment depth and noting the surface pollutants in the structure will be helpful in planning maintenance. The pollutants collected in SNOUT® equipped structures will consist of floatable debris and oils on the surface of the captured water, and grit and sediment on the bottom of the structure.
- It is best to schedule maintenance based on the solids collected in the sump. Optimally, the structure should be cleaned when the sump is half full (e.g. when 2 feet of material collects in a 4 foot sump, clean it out).
- Structures should also be cleaned if a spill or other incident causes a larger than normal accumulation of pollutants in a structure.
- Maintenance is best done with a vacuum truck.
- If oil absorbent hydrophobic booms are being used in the structure to enhance hydrocarbon capture and removals, they should be checked on a monthly basis, and serviced or replaced when more than 2/3 of the boom is submerged, indicating a nearly saturated state.
- All collected wastes must be handled and disposed of according to local environmental requirements.
- To maintain the SNOUT® hoods themselves, an annual inspection of the anti-siphon vent and access hatch are recommended. A simple flushing of the vent, or gentle rodding with a flexible wire are all that's typically needed to maintain the anti-siphon properties. Opening and closing the access hatch once a year ensures a lifetime of trouble-free service.

Further structural design guidelines, maintenance recommendations and site inspection field report sheets are available from BMP, Inc. Please contact us if we can offer further assistance.

Summary

Municipal engineers and stormwater designers are grappling to adapt a pollution control function to traditional drainage systems, recognizing that fundamental changes in traditional stormwater infrastructure design will be required. Presently, the primary function of most MS4s are to evacuate stormwater from point A to point B as quickly and efficiently as possible, often with minimal regard of the impact to receiving waters. As such, the stormwater quality regulations that are being promulgated across the United States are being met with concern by impacted municipalities. Fortunately, implementation of simple design changes, and low-cost technologies, as manufactured by Best Management Products, Inc., can make new regulations mandating reductions in the discharge of trash, floatable debris, oil and grease, and sediment easier to comply with. Updated structure designs are particularly easy to implement for new construction. In areas where catch basins already have sumps, installing an outlet hood is quick work which can yield substantial benefits. Retrofits to systems without sumped structures, especially at strategic nodes, are still cost-effective as they make the existing conveyance systems more efficient, and can extend the service life of traditional stormwater facilities. The work yet to be done to improve our stormwater infrastructure is still daunting. The benefits of reducing pollutants from stormwater runoff will be numerous, including better surface water quality, contributing to better habitat for

wildlife, a healthier environment, and more opportunities for recreation and appreciation of our natural resources.

References

Pitt, Robert and Field, Richard. "An Evaluation of Storm Drainage Inlet Devices for Stormwater Quality Treatment." The University of Alabama at Birmingham, Department of Civil and Environmental Engineering, United States Environmental Protection Agency, Wet Weather Flow Research Program, pp. 3-4, 1998.

United States Environmental Protection Agency., Environmental News, "EPA expands controls on polluted runoff to further protect Nation's drinking water and waterways." R-134, p. 1, November, 1999.

HydroQual, Inc., "City-Wide Floatables Study." New York City Department of Environmental Protection, Bureau of Environmental Engineering, Division of Water Quality Improvement. As cited in "CSO Technology Fact Sheet, Floatables Control". United States Environmental Protection Agency, Washington, D. C. Document EPA 832-F99-008, p. 5, September 1999.

Shuck, W., "Waterway trash limits considered", Long Beach Press-Telegram, p. A3, Nov. 29, 2000.

SNOUT® is a registered trademark of Best Management Products, Inc.
53 Mt. Archer Rd., Lyme, CT 06371
Phone: 800-504-8008 Fax: 860-434-3195 Web Site: www.bmpinc.com
The SNOUT® is protected by US Patent # 6126817, international patents pending.

Introduction to Design and Maintenance Considerations for SNOUT® Stormwater Quality Systems

Background:

The SNOUT system from Best Management Products, Inc. (BMP, Inc.) is based on a vented hood that can reduce floatable trash and debris, free oils, and other solids from stormwater discharges. In its most basic application, a SNOUT hood is installed over the outlet pipe of a catch basin or other stormwater quality structure which incorporates a deep sump (see Installation Drawing). The SNOUT forms a baffle in the structure which collects floatable debris and free oils on the surface of the captured stormwater, while permitting heavier solids to sink to the bottom of the sump. The clarified intermediate layer is forced out of the structure through the open bottom of the SNOUT by displacement from incoming flow. The resultant discharge contains considerably less unsightly trash and other gross pollutants, and can also offer reductions of free-oils and finer solids.

As with any structural stormwater quality BMP (Best Management Practice), design and maintenance considerations will have a dramatic impact on SNOUT system performance over the life of the facility. The most important factor to consider when designing structures which will incorporate a SNOUT is the depth of the sump (the sump is defined as the depth from beneath the invert of the outlet pipe to the bottom of the structure). Simply put, the deeper the sump, the more effective the unit will be both in terms of pollutant removals and reducing frequency of maintenance. More volume in a structure means more quiescence, thus allowing the pollutant constituents a better chance to separate out. Secondly, more volume means fewer cycles between maintenance operations, because the structure has a greater capacity. Of equal importance to good performance is putting SNOUTs in every inlet whenever possible. The closer one captures pollution to where it enters the infrastructure (e.g. at the inlet), the less mixing of runoff there is, and the easier it will be to separate out pollutants. Putting SNOUTs and deep sumps in every inlet develops a powerful structural treatment train with a great deal of effective storage volume where even finer particles may have chance to settle out.

Design Notes:

- The SNOUT size is ALWAYS greater than the nominal pipe size. The SNOUT should cover the pipe OD plus the grouted area around the pipe (e.g. for a 12” pipe, an 18” SNOUT is the correct choice).

- As a rule of thumb, BMP, Inc. recommends *minimum* sump depths based on outlet pipe inside diameters of 2.5 to 3 times the outlet pipe size.
- Special Note for Smaller Pipes: A minimum sump depth of 36 inches for all pipe sizes 12 inches ID or less, and 48 inches for pipe 15-18 inches ID is required if collection of finer solids is desired.
- The plan dimension of the structure should be up to 6 to 7 times the flow area of the outlet pipe.
- To optimize pollutant removals establish a "treatment train" with SNOUTs placed in every inlet where it is feasible to do so (this protocol applies to most commercial, institutional or municipal applications and any application with direct discharge to surface waters).
- At a minimum, SNOUTs should be used in every third structure for less critical applications (less critical areas might include flow over grassy surfaces, very low traffic areas in private, non-commercial or non-institutional settings, single family residential sites).
- Bio-Skirts™ (for hydrocarbons and/or bacteria reduction in any structure) and flow deflectors (for settleable solids in a final polishing structure) can increase pollutant removals. Bio-Skirts are highly recommended for gas or vehicle service stations, convenience stores, restaurants, loading docks, marinas, beaches, schools or high traffic applications.
- The "R" series SNOUTs (12R, 18R, 24R, 30R, 52R/72and 72R/96) are available for round manhole type structures of up to 72" ID; the "F" series SNOUTs (12F, 18F, 24F, 30F, 36F, 48F, 72F and 96F) are available for flat walled box type structures; the "NP" series SNOUTs (NP1218R, NP1524R, NP1830R, and NP2430R) are available for PVC Nyloplast® type structures up to 30" ID.

Example Structure Sizing Calculation:

A SNOUT equipped structure with a 15 inch ID outlet pipe (1.23 sqft. flow area) will offer best performance with a minimum plan area of 7.4 sqft. and 48 inch sump. Thus, a readily available 48 inch diameter manhole-type structure, or a rectangular structure of 2 feet x 4 feet will offer sufficient size when combined with a sump depth of 48 inches or greater.

Maintenance Recommendations:

- Monthly monitoring for the first year of a new installation after the site has been stabilized.
- Measurements should be taken after each rain event of .5 inches or more, or monthly, as determined by local weather conditions.
- Checking sediment depth and noting the surface pollutants in the structure will be helpful in planning maintenance.
- The pollutants collected in SNOUT equipped structures will consist of floatable debris and oils on the surface of the captured water, and grit and sediment on the bottom of the structure.

- It is best to schedule maintenance based on the solids collected in the sump.
- Optimally, the structure should be cleaned when the sump is half full (e.g. when 2 feet of material collects in a 4 foot sump, clean it out).
- Structures should also be cleaned if a spill or other incident causes a larger than normal accumulation of pollutants in a structure.
- Maintenance is best done with a vacuum truck.
- If Bio-Skirts™ are being used in the structure to enhance hydrocarbon capture and/or bacteria removals, they should be checked on a monthly basis, and serviced or replaced when more than 2/3 of the boom is submerged, indicating a nearly saturated state. Assuming a typical pollutant-loading environment exists, Bio-Skirts should be serviced* or replaced annually.
- In the case of an oil spill, the structure should be serviced and Bio-Skirts replaced (if any) immediately
- All collected wastes must be handled and disposed of according to local environmental requirements.
- To maintain the SNOUT hoods themselves, an annual inspection of the anti-siphon vent and access hatch are recommended. A simple flushing of the vent, or a gentle rodding with a flexible wire are all that's typically needed to maintain the anti-siphon properties. Opening and closing the access hatch once a year ensures a lifetime of trouble-free service.

Further structural design guidelines including CAD drawings, hydraulic spreadsheets, and site inspection and maintenance field reports and installation inspection sheets are available from BMP, Inc.

*To extend the service life of a Bio-Skirt, the unit may be "wrung out" to remove accumulated oils and washed in an industrial washing machine in warm water. The Bio-Skirt may then be re-deployed as long the material maintains it's structural integrity.

Fitment Guide: Based on SNOUT inlet area vs. pipe inlet area.

% OF SNOUT INLET AREA vs. PIPE INSIDE DIAMETER													
MODEL	**12F**	**12R**	**18F**	**18R**	**24F**	**24R**	**30F**	**30R**	**36F**	**48F**	**52R**	**72F**	**96F**
(SQFT.)	*0.393*	*0.455*	*1.091*	*1.264*	*1.843*	*2.118*	*2.793*	*3.210*	*3.534*	*6.278*	*9.045*	*14.13702*	*25.132*
PIPE I.D.													
4	450.3%	521.4%	*N/O*	*N/O*	*N/O*	*N/O*	*N/O*	*N/O*	*N/O*	*N/O*	*N/O*	*N/O*	*N/O*
6	200.2%	231.7%	555.6%	643.8%	*N/O*	*N/O*	*N/O*	*N/O*	*N/O*	*N/O*	*N/O*	*N/O*	*N/O*
8	112.6%	130.3%	312.6%	362.1%	528.1%	606.8%	*N/O*	*N/O*	*N/O*	*N/O*	*N/O*	*N/O*	*N/O*
10	72.1%	83.4%	200.0%	231.8%	338.0%	388.3%	*N/O*	*N/O*	*N/O*	*N/O*	*N/O*	*N/O*	*N/O*
12	*N/A*	*N/A*	138.9%	160.9%	234.7%	269.7%	355.6%	409%	450%	*N/O*	*N/O*	*N/O*	*N/O*
15	*N/A*	*N/A*	88.9%	103.0%	150.2%	172.6%	227.6%	262%	288%	*N/O*	*N/O*	*N/O*	*N/O*
18	*N/A*	*N/A*	61.7%	71.5%	104.3%	119.9%	158.1%	182%	200%	355%		*N/O*	*N/O*
21	*N/A*	*N/A*	*N/A*	*N/A*	76.6%	88.1%	116.1%	133%	147%	261%	376%	*N/O*	*N/O*
24	*N/A*	*N/A*	*N/A*	*N/A*	*N/A*	*N/A*	88.9%	102%	112%	200%	288%	*N/O*	*N/O*
27	*N/A*	*N/A*	*N/A*	*N/A*	*N/A*	*N/A*	70.2%	81%	89%	158%	227%	*N/O*	*N/O*
30	*N/A*	*N/A*	*N/A*	*N/A*	*N/A*	*N/A*	56.9%	65%	72%	128%	184%	288%	*N/O*
36	*N/A*	*N/A*	*N/A*	*N/A*	*N/A*	*N/A*	*N/A*	*N/A*	50%	89%	128%	200%	355.5%
42	*N/A*	*N/A*	*N/A*	*N/A*	*N/A*	*N/A*	*N/A*	*N/A*	*N/A*	65%	94%	147%	261.2%
48	*N/A*	*N/A*	*N/A*	*N/A*	*N/A*	*N/A*	*N/A*	*N/A*	*N/A*	50%	72%	113%	200.0%
54	*N/A*	*N/A*	*N/A*	*N/A*	*N/A*	*N/A*	*N/A*	*N/A*	*N/A*	*N/A*	57%	89%	158.0%
60	*N/A*	*N/A*	*N/A*	*N/A*	*N/A*	*N/A*	*N/A*	*N/A*	*N/A*	*N/A*	*N/A*	72%	128.0%
66	*N/A*	*N/A*	*N/A*	*N/A*	*N/A*	*N/A*	*N/A*	*N/A*	*N/A*	*N/A*	*N/A*	60%	105.8%
72	*N/A*	*N/A*	*N/A*	*N/A*	*N/A*	*N/A*	*N/A*	*N/A*	*N/A*	*N/A*	*N/A*	50%	88.9%
78	*N/A*	*N/A*	*N/A*	*N/A*	*N/A*	*N/A*	*N/A*	*N/A*	*N/A*	*N/A*	*N/A*	*N/A*	75.7%
84	*N/A*	*N/A*	*N/A*	*N/A*	*N/A*	*N/A*	*N/A*	*N/A*	*N/A*	*N/A*	*N/A*	*N/A*	65.3%
90	*N/A*	*N/A*	*N/A*	*N/A*	*N/A*	*N/A*	*N/A*	*N/A*	*N/A*	*N/A*	*N/A*	*N/A*	56.9%

Use "F" for flat back SNOUT in rectangular structure
Use "R" for round back SNOUT in cylindrical structure

VALUE%	=> Marginal Sizing
N/A	=> Not Applicable
N/O	=> Not Optimal

Design Note: The SNOUT size will always be bigger than the pipe size as the SNOUT must cover the pipe O.D. (i.e. Use an 18" SNOUT for 12" pipe.)

Installation Drawings:

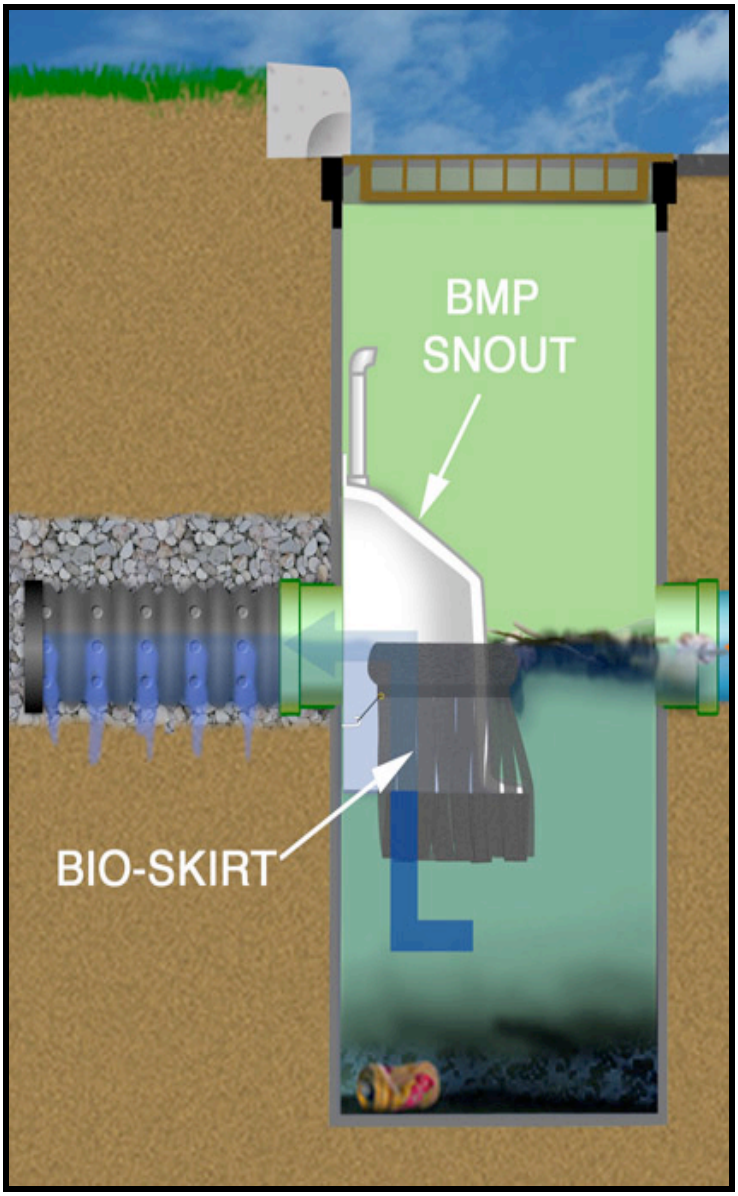

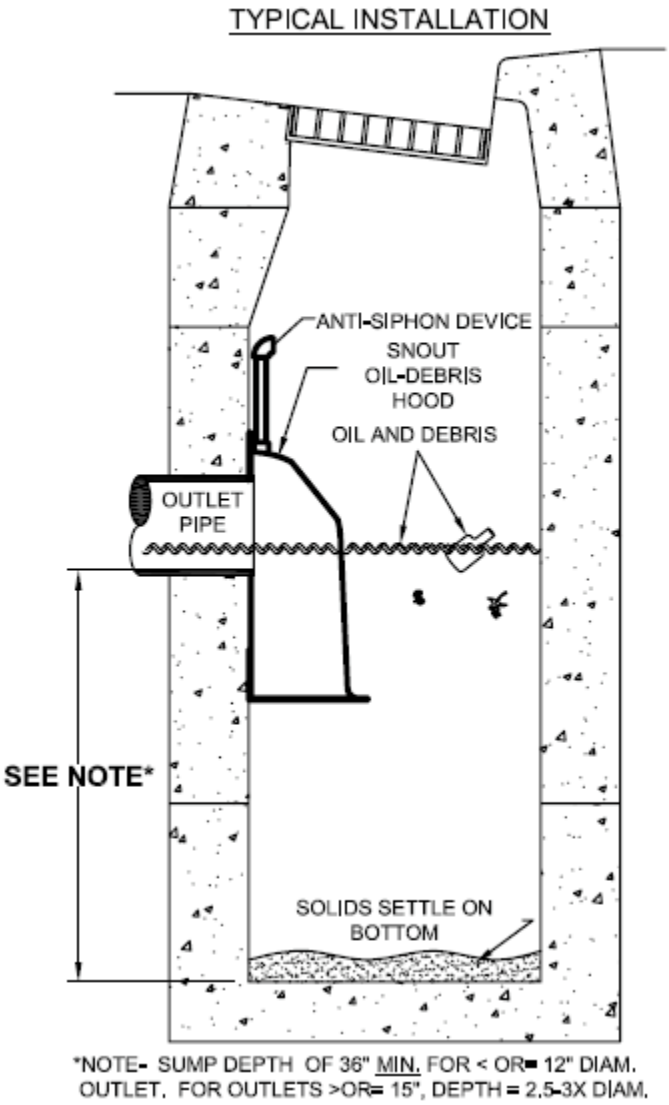

Contact Information:

Please contact us if we can offer further assistance. 53 Mt. Archer Rd. Lyme, CT 06371. Technical Assistance: T. J. Mullen (800-504-8008, tjm@bmpinc.com) or Lee Duran (888-434-0277).

Website: www.bmpinc.com

The SNOUT® is protected by: US PATENT # 6126817 CANADIAN PATENT # 2285146
SNOUT® is a registered trademark of Best Management Products, Inc. Nyloplast® is a registered trademark of ADS Structures, Inc.

Best Management Products, Inc.

SNOUT Oil-Water-Debris Separator

K-factor Worksheet. Outlet pipe partially full. H=K Vo^2 / (2g)
where H=Head loss in manhole with SNOUT (ft). K=K factor from table.
Vo=Outlet pipe velocity (fps). g=32.174 ft/s^2

BMP SNOUT Model	Max. Pipe I.D. (in.)*	INPUTS		RESULTS	
		Design Flow (cfs)	Design Velocity (fps)	Head Loss w/ SNOUT (ft.)	K factor
72FTBB	66	114	9.5	3.05	2.18

**SNOUT must fit over pipe O.D. to ensure proper installation. Pipes with heavy wall thickness (e.g. RCP) may require a larger SNOUT size to fit over the pipe even though pipe I.D. could be accomodated by a smaller SNOUT*

USER NOTE: To increase flow capacity or to minimize losses, choose a larger SNOUT model as needed.

BMP, Inc.	
Phone:	(800) 504-8008
Fax:	(410) 687-6757
Website:	www.bmpinc.com
Email:	tjm@bmpinc.com

BMP's products are proudly made in the USA which employs American workers and is a benefit for any project funded with stimulus dollars!

COMPANY INFORMATION

Best Management Products, Inc.

HEADQUARTERS
53 Mt. Archer Road
Lyme, CT
06371
USA

860-434-0277
860-434-3195 fax
Lee Duran, CEO

SALES AND ENGINEERING OFFICE
506 Beck Avenue
Essex, MD 21221
USA

410-687-6256
410-687-6757 fax
T. J. Mullen, President
tjm@bmpinc.com

Products: Snout®, Bio-Skirt®, Stainless FlowDeftector™, Stainless TrashScreen™

Domestic Manufacture: All finished products are 100% manufactured and assembled in the USA.

Domestic Shipping: All products are shipped on domestic carriers from warehouses in the USA.

Sub Assemblies: All sub assemblies (e.g. gaskets, hardware, etc.) are from US companies.

Raw Materials: More than 85% of raw materials in finished goods are of domestic origin.

Please direct further questions to contacts listed above.

Explanation of terms, standards, and labels:

There are many terms, standards, and labels used throughout the Best Management Practices stormwater quality realm. The industry relevant terms related to our products are listed below:

Catch Basin Trap, Catch Basin Oil and Debris Trap, Catch Basin Debris Trap, Environmental Hood, Catch Basin Insert, Catch Basin Inlet Filter, Inlet Filter, Catch Basin Hood, Catch Basin Debris Hood, Catch Basin Oil and Debris Hood, Oil and Floating Debris Trap,Catch Basin Baffle, Storm Drain Filters, Treatment Train Device, Oil and Floating Debris Trap, Stormwater Catch Basin with Filtration,Adsorbing Filter, Adsorb Filter, etc.: These terms relate to or could describe the BMP SNOUT used alone or in conjunction with theBio-Skirt or Stainless TrashScreen.

Low Impact Development, LID, LID-compliant, LID-requirements: The BMP SNOUT, Bio-Skirt and Stainless TrashScreen may all be described as Low Impact Development or Low Impact Design (LID) products or devices.

Stormwater Pollutant Removal (STC), Oil and Sand Removal (OSR), Sediment and Hydrocarbons filtration system, Waterworks Products, Trash and Debris Remover, Stormwater Filter: The BMP SNOUT, Bio-Skirt and Stainless TrashScreen can be labeled with any of of these terms. Our products can remove oil, sand, debris, sediment, hydrocarbons, bacteria and other pollutants (including phosphorus) from stormwater, in an effort to improve the quality of the runoff which drains into surface water bodies.

Total Maximum Daily Load, TMDL, TMDL rules, TMDL requirements, Total Maximum Daily Load requirements, Total Maximum Daily Load rules: The BMP SNOUT, used alone or in conjunction with the BMP Bio-Skirt or Stainless TrashScreen may be used to reduce certain pollutants of concern in compliance with a TMDL.

Best Available Technology, BAT, Best Available Technology Compatible, BAT compatible: The BMP SNOUT, used alone or in

conjunction with the BMP Bio-Skirt or BMP Stainless TrashScreen could be a BAT device(s).

EPA-compatible, EPA-approved, NPDES, 40CFR 122.26, LEED, LEED Credits: The BMP SNOUT, used alone or in conjunction with the BMP Bio-Skirt or BMP Stainless TrashScreen may meet certain stormwater treatment standards established by the EPA and other government agencies, and may also qualify for certain LEED credits.

BMP, Best Management Practice, EPA approved BMP, BMP Stormwater Solution: The BMP SNOUT, used alone or in conjunction with the Bio-Skirt or Stainless TrashScreen qualify as a Stormwater Best Management Practice or "BMP" and are manufactured by Best Management Products, Inc. (BMP, Inc.).

Field test, TSS, TP, EPA, Trash: The BMP SNOUT has undergone some field testing to evaluate it's performance including third party tests, Information on Solids removals can be seen here.

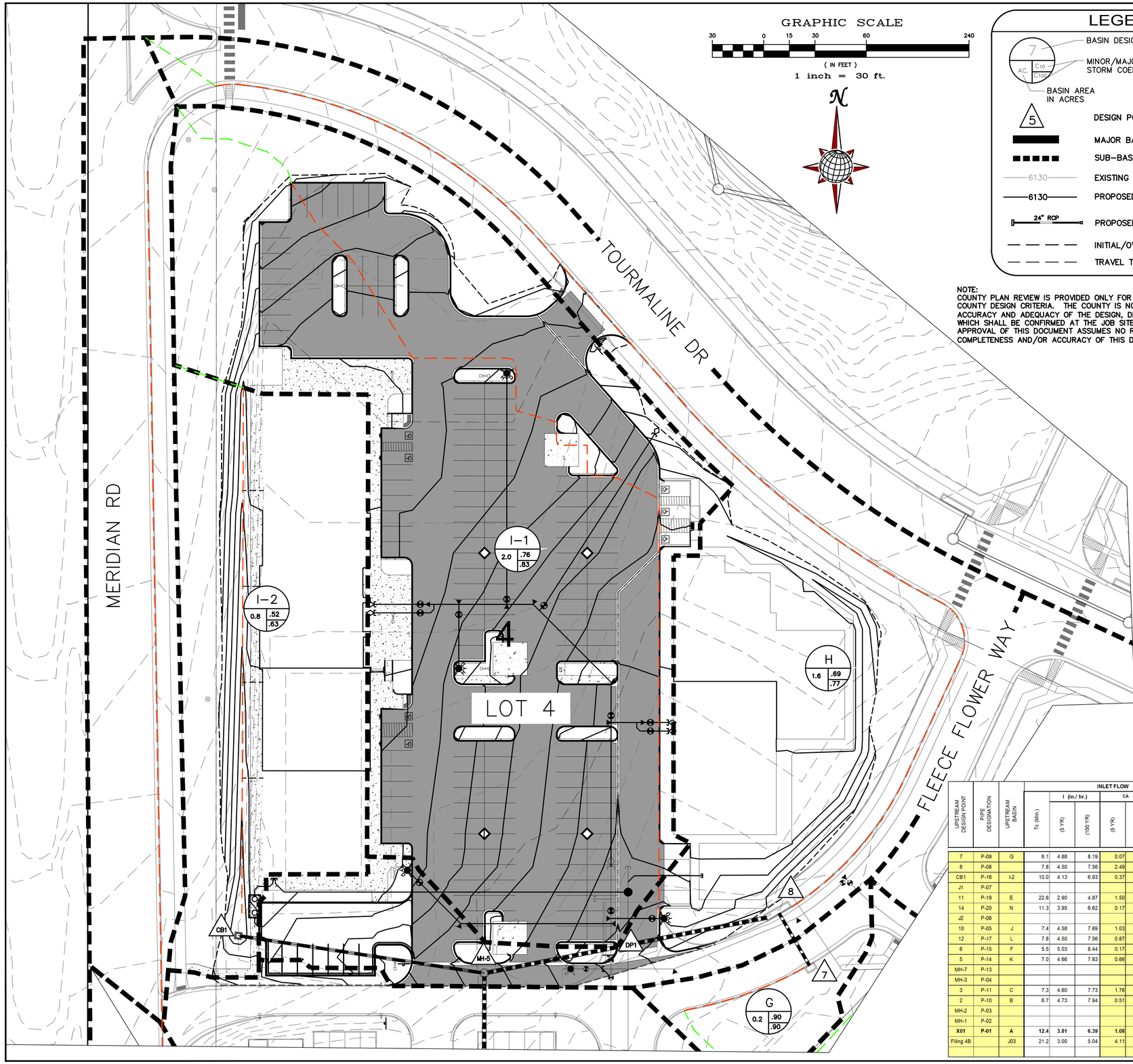

GRAPHIC SCALE

30 0 15 30 60 240

(IN FEET)

1 inch = 30 ft.

LEGEND

- BASIN DESIGNATION
- MINOR/MAJOR STORM COEFFICIENT
- BASIN AREA IN ACRES
- DESIGN POINT DESIGNATION
- MAJOR BASIN BOUNDARY
- SUB-BASIN BOUNDARY
- 6130 EXISTING CONTOUR
- 6130 PROPOSED COUNTOUR
- 24" RCP PROPOSED STORM SEWER
- INITIAL/OVERLAND TIME (Ti)
- TRAVEL TIME (Tt)

NOTE:
COUNTY PLAN REVIEW IS PROVIDED ONLY FOR GNERAL CONFORMANCE WITH COUNTY DESIGN CRITERIA. THE COUNTY IS NOT RESPONSIBLE FOR THE ACCURACY AND ADEQUACY OF THE DESIGN, DIMENSIONS, AND/OR ELEVATIONS WHICH SHALL BE CONFIRMED AT THE JOB SITE. THE COUNTY THROUGH THE APPROVAL OF THIS DOCUMENT ASSUMES NO RESPONSIBILITY FOR THE COMPLETENESS AND/OR ACCURACY OF THIS DOCUMENT.

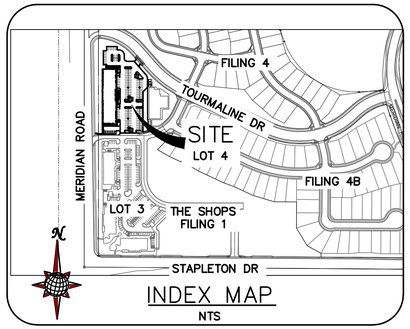

INDEX MAP

NTS

PROJECT BENCHMARK

INTERSECTION OF WOODMEN RD AND MERIDIAN ROAD AT SW CORNER (BRASS CAP W/ NO. GF-9)

ELEVATION = 6874.00

BASIN LAB EL / DEV.	AREA (AC.) UNDEV	2.5 AC	1 DU/AC	2 DU/AC	TOTAL	COMPOSITE FACTOR 5-year	100-year
BASIN DESIGNATION	AREA (AC.) UNDEV	PAVEMENT	ROOF	LAWN	TOTAL	COMPOSITE FACTOR 5-year	100-year
Basin 4, Filing 4B/ Shops Filing 1 FDR							
A	From Lot 3, Shops Filing 1 at Meridian Ranch Drainage Letter by Olsson Associates, Dated May 7, 2015 Approved August 20, 2015				1.97	0.55	0.70
B					1.08	0.47	0.65
C					2.25	0.78	0.89
E					1.29	0.78	0.89
F					0.22	0.78	0.86
G		**0.06**		**0.11**	**0.17**	**0.38**	**0.57**
H		**0.84**	**0.34**	**0.40**	**1.58**	**0.66**	**0.77**
I-1		**1.58**		**0.42**	**2.00**	**0.73**	**0.83**
I-2		**0.06**	**0.40**	**0.32**	**0.78**	**0.48**	**0.63**
J	From Lot 3, Shops Filing 1 at Meridian Ranch Drainage Letter by Olsson Associates, Dated May 7, 2015				1.30	0.79	0.91
K					0.83	0.79	0.87
L					1.19	0.73	0.84
N					0.41	0.35	0.65

UPSTREAM DESIGN POINT	PIPE DESIGNATION	UPSTREAM BASIN	INLET FLOW Tc (Min.)	I (in./ hr.) (5 YR)	I (in./ hr.) (100 YR)	CA (5 YR)	CA (100 YR)	Q (5 YR)	Q (100 YR)	SYSTEM FLOW Sum Tc (min.)	I (in./ hr.) (5 YR)	I (in./ hr.) (100 YR)	CA (5 YR)	CA (100 YR)	Q (5 YR)	Q (100 YR)	TRAVEL TIME PIPE DIA	ROUGHNESS (n)	DESTINATION DP	SLOPE %	LENGTH (FT)	VEL. (FPS)	TRAVEL TIME Tt
7	P-09	G	6.1	4.88	8.19	0.07	0.10	0.3	0.8						0.3	0.8	18	0.013	8	1.00%	34	6.0	0.1
8	P-08		7.8	4.50	7.56	2.49	2.89	11.2	21.8	7.8	4.50	7.56	2.56	2.99	12	23	24	0.013	MH-5	0.60%	176	5.6	0.5
CB1	P-16	I-2	10.0	4.13	6.93	0.37	0.49	1.5	3.4						1.5	3.4	18	0.013	MH-5	7.58%	142	16.4	0.1
J1	P-07									10.1	4.11	6.90	2.93	3.48	12	24	24	0.013	MH-4	0.40%	276	4.6	1.0
11	P-19	E	22.6	2.90	4.87	1.50	1.71	4.3	8.3						4.3	8.3	18	0.013	MH-4	1.00%	65	6.0	0.2
14	P-20	N	11.3	3.95	6.62	0.17	0.19	0.7	1						0.7	1.3	18	0.013	MH-4	1.00%	181	6.0	0.5
J2	P-06									22.8	2.89	4.85	4.60	5.37	13	26	30	0.013	10	0.50%	270	5.9	0.8
10	P-05	J	7.4	4.58	7.69	1.03	1.18	4.7	9.1	23.6	2.84	4.77	5.62	6.56	16	31	30	0.013	MH-3	2.80%	211	14.0	0.3
12	P-17	L	7.8	4.50	7.56	0.87	1.00	3.9	7.6						3.9	7.6	18	0.013	6	1.00%	59	6.0	0.2
6	P-15	F	5.5	5.03	8.44	0.17	0.19	0.9	1.6	8.0	4.47	7.51	1.04	1.19	4.7	8.9	18	0.013	5	1.80%	32	8.0	0.1
5	P-14	K	7.0	4.66	7.83	0.66	0.72	3.1	5.7	8.0	4.46	7.48	1.70	1.91	7.6	14	18	0.013	MH-7	2.40%	57	9.2	0.1
MH-7	P-13									8.1	4.44	7.45	1.70	1.91	7.5	14	18	0.013	MH-3	2.50%	115	9.4	0.2
MH-3	P-04									23.8	2.83	4.74	7.32	8.47	21	40	30	0.013	MH-2	2.10%	257	12.1	0.4
3	P-11	C	7.3	4.60	7.73	1.76	2.00	8.1	15.5						8	15	24	0.013	2	0.20%	40	3.2	0.2
2	P-10	B	6.7	4.73	7.94	0.51	0.70	2.4	5.6	7.5	4.56	7.66	2.26	2.70	10	21	24	0.013	MH-2	0.50%	97	5.1	0.3
MH-2	P-03									24.2	2.80	4.71	9.58	11.17	27	53	36	0.013	MH-1	0.50%	175	6.7	0.4
MH-1	P-02									24.6	2.78	4.66	9.58	11.17	27	52	36	0.013	X01	0.30%	171	5.2	0.5
X01	**P-01**	**A**	**12.4**	**3.81**	**6.39**	**1.08**	**1.38**	**4.1**	**8.8**	**25.2**	**2.74**	**4.61**	**10.67**	**12.55**	**29**	**58**	**42**	**0.013**	**Riling 4B**	**0.40%**	**25**	**6.6**	**0.1**
Filing 4B		J03	21.2	3.00	5.04	4.11	4.68	12	24	25.2	2.74	4.60	14.78	17.23	40	79	48	0.013	J04	0.50%	447	8.1	0.9

No.	Revisions	Date Inst.	Appr.	Date
-				
-				
-				
-				

TECH CONSTRUCITON CORP.
10305 ANGELES ROAD
PEYTON, CO 80831
TELEPHONE: 719.495.7444
FAX: 719.495.7608

MERIDIAN RANCH

LOT 4 - THE SHOPS FLING 1
FINAL DRAINAGE PLAN
FIGURE X

Drawn by TAK
Checked by RG
Date SEPT 2018
Scale AS SHOWN
Sheet Number DR1

S:\CivilProj\Shops Phase 2\DWG\Plan Sheets\Basin Maps\FDR-SHOPS-2-RAT.dwg, 1/2/2019 12:27:54 PM

DRAINAGE MAP FROM THE SHOPS AT MERIDIAN RANCH, LOT 3 FINAL DRAINAGE LETTER
FROM OLSSEN ASSOCIATES (DATED MAY 7, 2015)

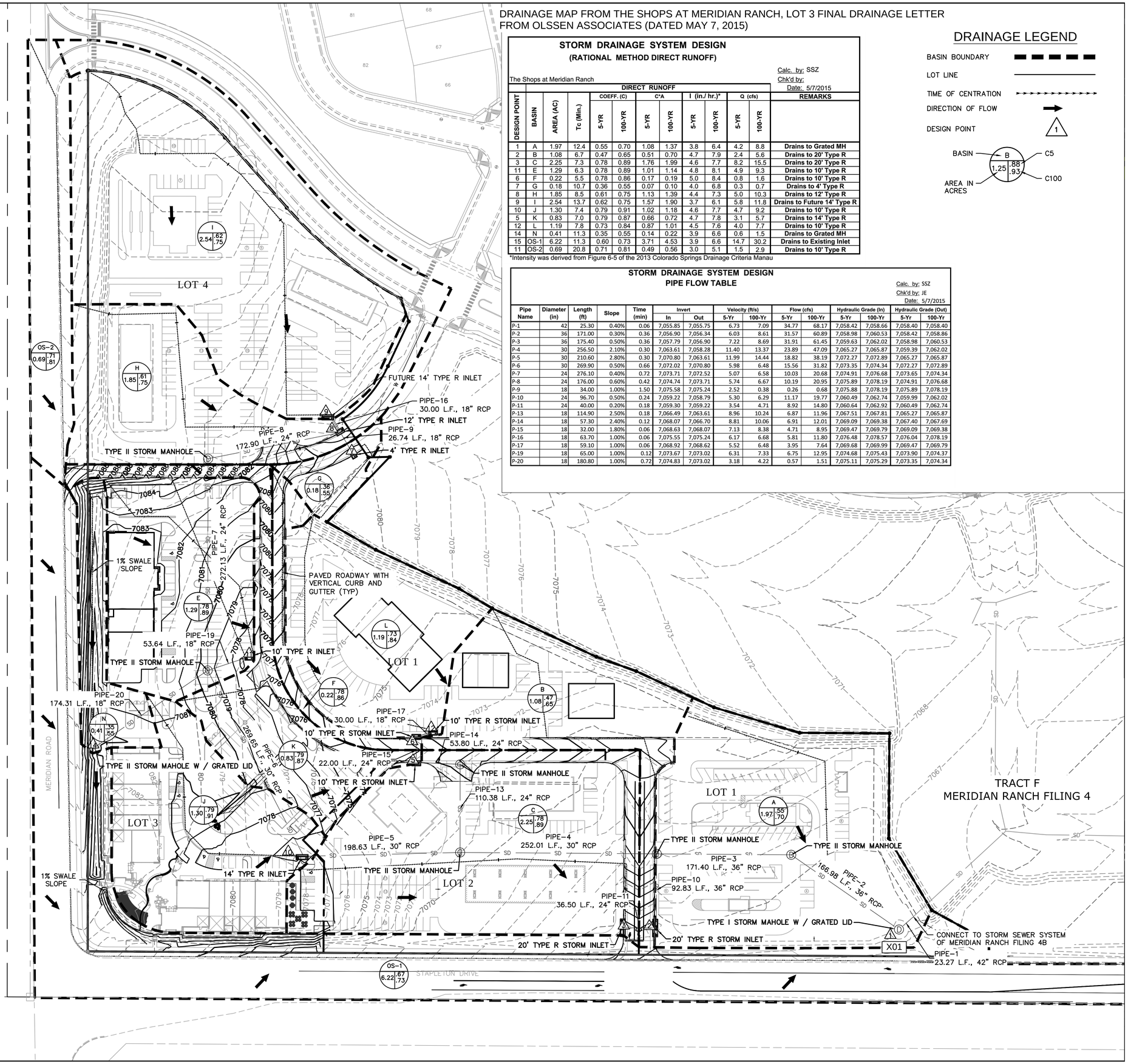

STORM DRAINAGE SYSTEM DESIGN
(RATIONAL METHOD DIRECT RUNOFF)

The Shops at Meridian Ranch

Calc. by: SSZ
Chk'd by:
Date: 5/7/2015

DESIGN POINT	BASIN	AREA (AC)	Tc (Min.)	DIRECT RUNOFF COEFF. (C) 5-YR	COEFF. (C) 100-YR	C*A 5-YR	C*A 100-YR	I (in./ hr.)* 5-YR	I (in./ hr.)* 100-YR	Q (cfs) 5-YR	Q (cfs) 100-YR	REMARKS
1	A	1.97	12.4	0.55	0.70	1.08	1.37	3.8	6.4	4.2	8.8	Drains to Grated MH
2	B	1.08	6.7	0.47	0.65	0.51	0.70	4.7	7.9	2.4	5.6	Drains to 20' Type R
3	C	2.25	7.3	0.78	0.89	1.76	1.99	4.6	7.7	8.2	15.5	Drains to 20' Type R
11	E	1.29	6.3	0.78	0.89	1.01	1.14	4.8	8.1	4.9	9.3	Drains to 10' Type R
6	F	0.22	5.5	0.78	0.86	0.17	0.19	5.0	8.4	0.8	1.6	Drains to 10' Type R
7	G	0.18	10.7	0.36	0.55	0.07	0.10	4.0	6.8	0.3	0.7	Drains to 4' Type R
8	H	1.85	8.5	0.61	0.75	1.13	1.39	4.4	7.3	5.0	10.3	Drains to 12' Type R
9	I	2.54	13.7	0.62	0.75	1.57	1.90	3.7	6.1	5.8	11.8	Drains to Future 14' Type R
10	J	1.30	7.4	0.79	0.91	1.02	1.18	4.6	7.7	4.7	9.2	Drains to 10' Type R
5	K	0.83	7.0	0.79	0.87	0.66	0.72	4.7	7.8	3.1	5.7	Drains to 14' Type R
12	L	1.19	7.8	0.73	0.84	0.87	1.01	4.5	7.6	4.0	7.7	Drains to 10' Type R
14	N	0.41	11.3	0.35	0.55	0.14	0.22	3.9	6.6	0.6	1.5	Drains to Grated MH
15	OS-1	6.22	11.3	0.60	0.73	3.71	4.53	3.9	6.6	14.7	30.2	Drains to Existing Inlet
11	OS-2	0.69	20.8	0.71	0.81	0.49	0.56	3.0	5.1	1.5	2.9	Drains to 10' Type R

*Intensity was derived from Figure 6-5 of the 2013 Colorado Springs Drainage Criteria Manau

STORM DRAINAGE SYSTEM DESIGN
PIPE FLOW TABLE

Calc. by: SSZ
Chk'd by: JE
Date: 5/7/2015

Pipe Name	Diameter (in)	Length (ft)	Slope	Time (min)	Invert In	Invert Out	Velocity (ft/s) 5-Yr	Velocity (ft/s) 100-Yr	Flow (cfs) 5-Yr	Flow (cfs) 100-Yr	Hydraulic Grade (In) 5-Yr	Hydraulic Grade (In) 100-Yr	Hydraulic Grade (Out) 5-Yr	Hydraulic Grade (Out) 100-Yr
P-1	42	25.30	0.40%	0.06	7,055.85	7,055.75	6.73	7.09	34.77	68.17	7,058.42	7,058.66	7,058.40	7,058.40
P-2	36	171.00	0.30%	0.36	7,056.90	7,056.34	6.03	8.61	31.57	60.89	7,058.98	7,060.53	7,058.42	7,058.86
P-3	36	175.40	0.50%	0.36	7,057.79	7,056.90	7.22	8.69	31.91	61.45	7,059.63	7,062.02	7,058.98	7,060.53
P-4	30	256.50	2.10%	0.30	7,063.61	7,058.28	11.40	13.37	23.89	47.09	7,065.27	7,065.87	7,059.39	7,062.02
P-5	30	210.60	2.80%	0.30	7,070.80	7,063.61	11.99	14.44	18.82	38.19	7,072.27	7,072.89	7,065.27	7,065.87
P-6	30	269.90	0.50%	0.66	7,072.02	7,070.80	5.98	6.48	15.56	31.82	7,073.35	7,074.34	7,072.27	7,072.89
P-7	24	276.10	0.40%	0.72	7,073.71	7,072.52	5.07	6.58	10.03	20.68	7,074.91	7,076.68	7,073.65	7,074.34
P-8	24	176.00	0.60%	0.42	7,074.74	7,073.71	5.74	6.67	10.19	20.95	7,075.89	7,078.19	7,074.91	7,076.68
P-9	18	34.00	1.00%	1.50	7,075.58	7,075.24	2.52	0.38	0.26	0.68	7,075.88	7,078.19	7,075.89	7,078.19
P-10	24	96.70	0.50%	0.24	7,059.22	7,058.79	5.30	6.29	11.17	19.77	7,060.49	7,062.74	7,059.99	7,062.02
P-11	24	40.00	0.20%	0.18	7,059.30	7,059.22	3.54	4.71	8.92	14.80	7,060.64	7,062.92	7,060.49	7,062.74
P-13	18	114.90	2.50%	0.18	7,066.49	7,063.61	8.96	10.24	6.87	11.96	7,067.51	7,067.81	7,065.27	7,065.87
P-14	18	57.30	2.40%	0.12	7,068.07	7,066.70	8.81	10.06	6.91	12.01	7,069.09	7,069.38	7,067.40	7,067.69
P-15	18	32.00	1.80%	0.06	7,068.63	7,068.07	7.13	8.38	4.71	8.95	7,069.47	7,069.79	7,069.09	7,069.38
P-16	18	63.70	1.00%	0.06	7,075.55	7,075.24	6.17	6.68	5.81	11.80	7,076.48	7,078.57	7,076.04	7,078.19
P-17	18	59.10	1.00%	0.06	7,068.92	7,068.62	5.52	6.48	3.95	7.64	7,069.68	7,069.99	7,069.47	7,069.79
P-19	18	65.00	1.00%	0.12	7,073.67	7,073.02	6.31	7.33	6.75	12.95	7,074.68	7,075.43	7,073.90	7,074.37
P-20	18	180.80	1.00%	0.72	7,074.83	7,073.02	3.18	4.22	0.57	1.51	7,075.11	7,075.29	7,073.35	7,074.34

DRAINAGE LEGEND

BASIN BOUNDARY
LOT LINE
TIME OF CENTRATION
DIRECTION OF FLOW
DESIGN POINT (1)

BASIN — B — C5
1.25 — .88 / .93 — C100
AREA IN ACRES

DWG: F:\Projects\014-1030\Documents\Reports\Drainage\141030_PDRN.dwg USER: azey HZ-BASE-F4B-14-04-28 HZ-BASE-COM
DATE: May 07, 2015 7:44pm XREFS: 141030_XBASE 141030_PUTIL 141030_PBASE 141030_FBASE

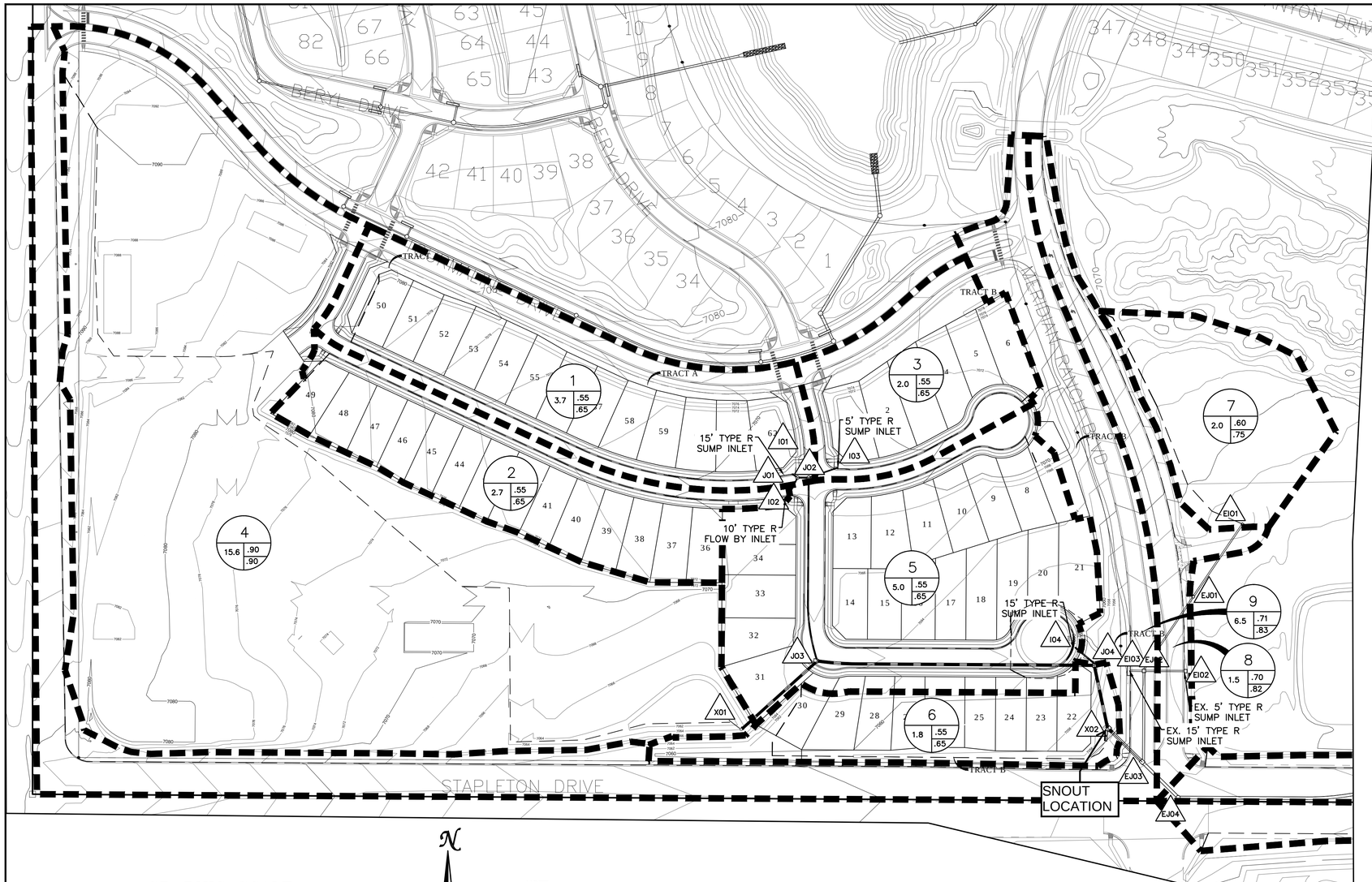

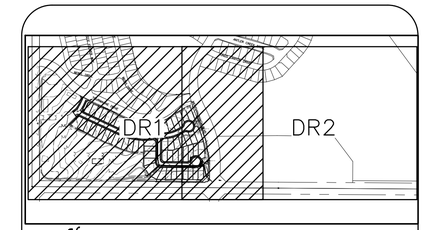

INDEX MAP
NTS

PROJECT BENCHMARK

INTERSECTION OF WOODMEN RD AND MERIDIAN ROAD AT SW CORNER (BRASS CAP W/ NO. GF-9)

ELEVATION = 6874.00

WATERSHED DESIGNATION

7 — BASIN DESIGNATION
AC. — BASIN AREA IN ACRES
C5 / C100 — MINOR/MAJOR STORM COEFFICIENT

LEGEND

- 7 / AC. / C5 / C100 — SUB-WATERSHED DESIGNATION
- 5 — DESIGN POINT DESIGNATION
- MAJOR BASIN BOUNDARY
- SUB-BASIN BOUNDARY
- 6130 — EXISTING CONTOUR
- 6130 — PROPOSED COUNTOUR
- 24" RCP — PROPOSED STORM SEWER
- INITIAL/OVERLAND TIME (Ti)
- TRAVEL TIME (Tt)

GRAPHIC SCALE

100 0 50 100 200 400

(IN FEET)

1 inch = 100 ft.

NOTE:
COUNTY PLAN REVIEW IS PROVIDED ONLY FOR GNERAL CONFORMANCE WITH COUNTY DESIGN CRITERIA. THE COUNTY IS NOT RESPONSIBLE FOR THE ACCURACY AND ADEQUACY OF THE DESIGN, DIMENSIONS, AND/OR ELEVATIONS WHICH SHALL BE CONFIRMED AT THE JOB SITE. THE COUNTY THROUGH THE APPROVAL OF THIS DOCUMENT ASSUMES NO RESPONSIBILITY FOR THE COMPLETENESS AND/OR ACCURACY OF THIS DOCUMENT.

DESIGN POINT	BASIN	AREA (AC)	Tc (Min.)	DIRECT RUNOFF I (in./ hr.) (5 YR)	I (in./ hr.) (100 YR)	COEFF. C (5 YR)	C (100 YR)	CA (5 YR)	CA (100 YR)	Q (5 YR)	Q (100 YR)	TOTAL RUNOFF Sum Tc (min.)	I (in./ hr.) (5 YR)	I (in./ hr.) (100 YR)	CA (5 YR)	CA (100 YR)	Q (5 YR)	Q (100 YR)	OVERLAND TRAVEL TIME DITCH OR GUTTER	ROUGHNESS	DESTINATION DP	SLOPE %	LENGTH (FT)	VEL. (FPS)	TRAVEL TIME Tt
I01	1	3.7	18.9	2.90	5.37	0.55	0.65	2.03	2.40	**5.9**	**13**						**5.9**	**13**							
I02	2	2.7	20.6	2.77	5.13	0.55	0.65	1.47	1.74	**4.1**	**9**						**4.1**	**8.9**	G	0.015	I04	1.00%	720	2.0	6.0
I03	3	2.0	18.9	2.90	5.37	0.55	0.65	1.10	1.30	**3.2**	**7**						**3.2**	**7.0**							
X01	4	15.6	21.0	2.74	5.08	0.90	0.90	14.00	14.00	**38**	**71**						**38**	**71**							
I04	5	5.0	17.8	2.99	5.54	0.55	0.65	2.75	3.25	**8.2**	**18.0**	26.6	2.41	4.46	3.2	4.0	**8.2**	**18**							
X02	6	1.8	17.0	3.06	5.67	0.55	0.65	0.96	1.14	**2.9**	**6**						**3**	**6.4**							
EI01	7	1.9	15.3	3.22	5.97	0.60	0.75	1.14	1.43	**3.7**	**9**						**3.7**	**8.5**							
EI02	8	1.5	10.9	3.73	6.92	0.70	0.82	1.04	1.22	**3.9**	**8**						**3.9**	**8.4**							
EI03	9	6.5	23.7	2.57	4.76	0.71	0.83	4.62	5.35	**11.9**	**25**						**12**	**25**							
EI04	10	1.8	14.9	3.26	6.04	0.75	0.85	1.38	1.56	**4.5**	**9**						**4.5**	**9.4**							
EI05	11	2.0	15.0	3.25	6.02	0.78	0.87	1.52	1.69	**4.9**	**10**						**4.9**	**10**							

UPSTREAM BASIN	UPSTREAM DESIGN POINT	INLET FLOW Tc (Min.)	I (in./ hr.) (5 YR)	I (in./ hr.) (100 YR)	CA (5 YR)	CA (100 YR)	Q (5 YR)	Q (100 YR)	SYSTEM FLOW Sum Tc (min.)	I (in./ hr.) (5 YR)	I (in./ hr.) (100 YR)	CA (5 YR)	CA (100 YR)	Q (5 YR)	Q (100 YR)	TRAVEL TIME PIPE DIA	ROUGHNESS (n)	DESTINATION DP	SLOPE %	LENGTH (FT)	VEL. (FPS)	TRAVEL TIME Tt
1	I01	18.9	2.90	5.37	2.03	2.40	5.9	13						**5.9**	**13**	18	0.013	J01	2.44%	8.19	9.3	0.0
2	I02	20.6	2.77	5.13	0.98	0.98	2.7	5						**2.7**	**5.0**	18	0.013	J01	1.26%	31.85	6.7	0.1
	J01								20.7	2.76	5.12	3.01	3.38	**8.3**	**17**	24	0.013	J02	1.51%	13.27	8.9	0.0
3	I03	18.9	2.90	5.37	1.10	1.30	3.2	7.0						**3.2**	**7.0**	18	0.013	J02	1.04%	47.91	6.1	0.1
	J02								20.7	2.76	5.12	4.11	4.68	**11**	**24**	24	0.013	J03	2.30%	294.09	11.0	0.4
4	X01	21.0	2.74	5.08	14.00	14.00	38	71						**38**	**71**	42	0.013	J03	1.00%	160.00	10.5	0.3
	J03								21.2	2.73	5.06	18.12	18.68	**49**	**94**	48	0.013	J04	0.50%	447.12	8.1	0.9
5	I04	17.8	2.99	5.54	2.75	3.25	8.2	18						**8.2**	**18**	24	0.013	J04	4.63%	41.03	15.5	0.0
	J04								22.1	2.67	4.94	20.87	21.93	**56**	**108**	48	0.013	X02	6.99%	100.70	30.3	0.1
6	X02	17.0	3.06	5.67	0.96	1.14	2.9	6.4	22.1	2.66	4.94	21.83	23.07	**58**	**114**	48	0.013	EJ03	0.73%	70.95	9.8	0.1
7	EI01	15.3	3.22	5.97	1.14	1.43	3.7	8.5						**3.7**	**8.5**	24	0.013	EJ01	0.50%	140.90	5.1	0.5
	EJ01								15.7	3.17	5.88	1.14	1.43	**3.6**	**8.4**	24	0.013	EJ02	1.95%	142.90	10.1	0.2
8	EI02	10.9	3.73	6.92	1.04	1.22	3.9	8.4						**3.9**	**8.4**	24	0.013	EJ02	1.47%	62.00	8.8	0.1
9	EI03	23.7	2.57	4.76	4.62	5.35	11.9	25						**12**	**25**	24	0.013	EJ02	5.10%	18.00	16.3	0.0
	EJ02								23.7	2.57	4.75	6.80	7.99	**17**	**38**	36	0.013	EJ03	2.20%	147.90	14.0	0.2
	EJ03								23.9	2.56	4.73	28.63	31.05	**73**	**147**	48	0.013	EJ04	0.50%	82.40	8.1	0.2
	EJ04								24.1	2.55	4.72	28.63	31.05	**73**	**146**	48	0.013	EJ05	0.50%	348.98	8.1	0.7
	EJ05								24.8	2.50	4.64	28.63	31.05	**72**	**144**	48	0.013	EJ06	0.50%	300.38	8.1	0.6
	EJ06								25.4	2.47	4.58	28.63	31.05	**71**	**142**	48	0.013	EJ07	1.50%	353.92	14.0	0.4
	EJ07								25.8	2.45	4.53	28.63	31.05	**70**	**141**	48	0.013	EJ08	1.30%	353.47	13.1	0.5
10	EI04	14.9	3.26	6.04	1.17	1.17	3.8	7.1						**3.8**	**7.1**	18	0.013	EJ08	1.90%	68.31	8.2	0.1
	EJ08								26.3	2.42	4.49	29.81	32.22	**72**	**145**	48	0.013	EJ09	1.10%	42.12	12.0	0.1
11	EI05	15.0	3.25	6.02	1.27	1.25	4.1	7.6						**4.1**	**7.6**	18	0.013	EJ09	6.00%	41.67	14.6	0.0
	EJ09								26.3	2.42	4.48	31.08	33.48	**75**	**150**	48	0.013	0S1	0.40%	393.21	7.2	0.9

TECH CONSTRUCITON CORP.
10305 ANGELES ROAD
PEYTON, CO 80831
TELEPHONE: 719.495.7444

MERIDIAN RANCH

MERIDIAN RANCH FILING 4B
FINAL DRAINAGE PLAN
FIGURE 6

Drawn by: LCG
Checked by: TAK
Date:
Scale: AS SHOWN
Sheet Number:

S:\Civil\Proj\Meridian Ranch\Filing 4B\dwg\Plan Sheets\Basin Maps\FIGURE\FIGURE-6B-B.AT.dwg, 7/10/2014 8:30:39 AM

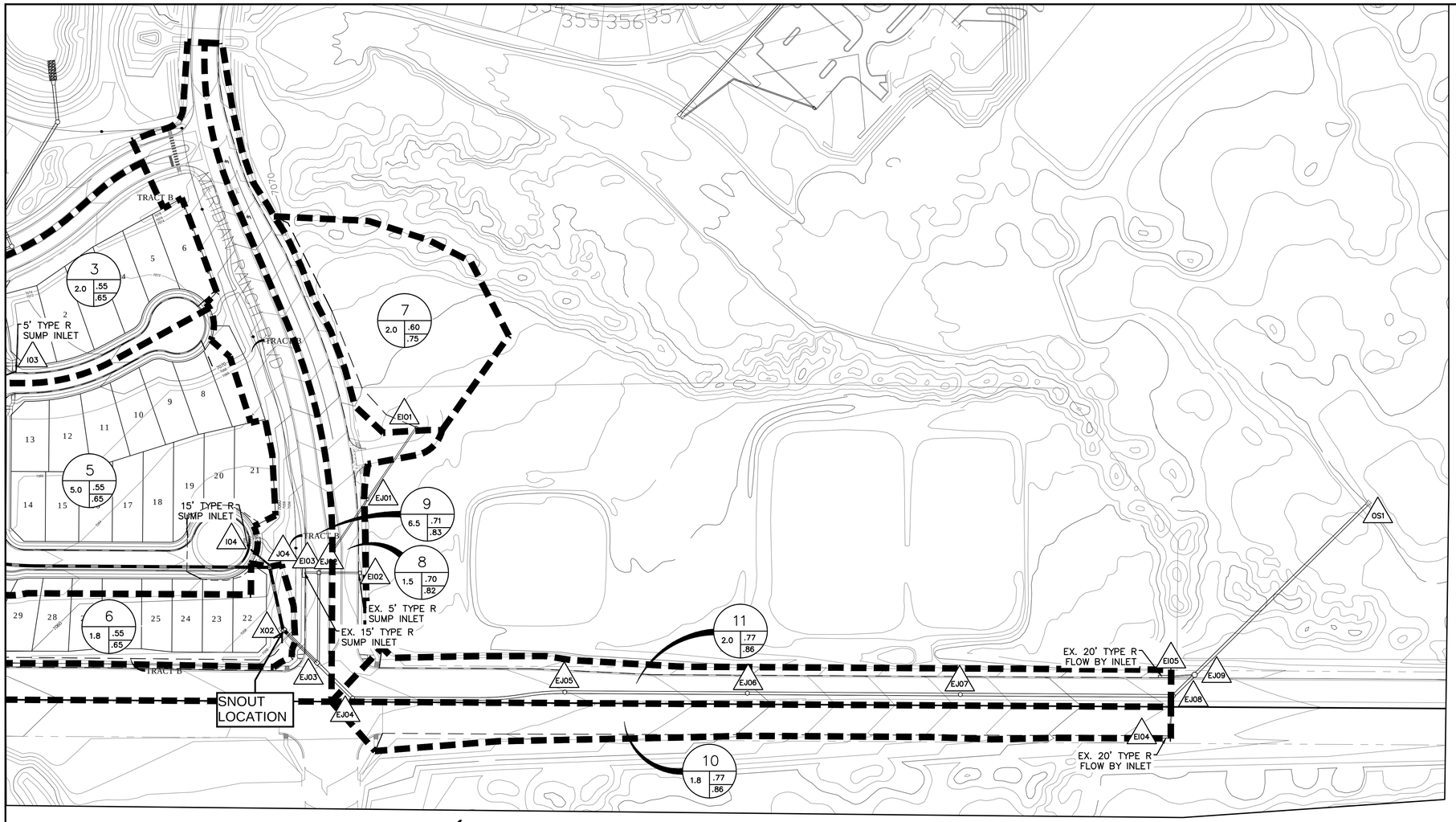

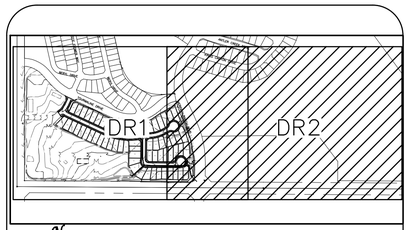

INDEX MAP
NTS

PROJECT BENCHMARK

INTERSECTION OF WOODMEN RD AND MERIDIAN ROAD AT SW CORNER (BRASS CAP W/ NO. GF-9)

ELEVATION = 6874.00

WATERSHED DESIGNATION

7 — BASIN DESIGNATION
AC. — BASIN AREA IN ACRES
Cs / C100 — MINOR/MAJOR STORM COEFFICIENT

LEGEND

- 7 / AC. / Cs / C100 — SUB-WATERSHED DESIGNATION
- 5 — DESIGN POINT DESIGNATION
- MAJOR BASIN BOUNDARY
- SUB-BASIN BOUNDARY
- 6130 — EXISTING CONTOUR
- 6130 — PROPOSED COUNTOUR
- 24" RCP — PROPOSED STORM SEWER
- INITIAL/OVERLAND TIME (Ti)
- TRAVEL TIME (Tt)

GRAPHIC SCALE
100 0 50 100 200 400
(IN FEET)
1 inch = 100 ft.

NOTE:
COUNTY PLAN REVIEW IS PROVIDED ONLY FOR GNERAL CONFORMANCE WITH COUNTY DESIGN CRITERIA. THE COUNTY IS NOT RESPONSIBLE FOR THE ACCURACY AND ADEQUACY OF THE DESIGN, DIMENSIONS, AND/OR ELEVATIONS WHICH SHALL BE CONFIRMED AT THE JOB SITE. THE COUNTY THROUGH THE APPROVAL OF THIS DOCUMENT ASSUMES NO RESPONSIBILITY FOR THE COMPLETENESS AND/OR ACCURACY OF THIS DOCUMENT.

DESIGN POINT	DIRECT RUNOFF											TOTAL RUNOFF							OVERLAND TRAVEL TIME						
	BASIN	AREA (AC)	Tc (Min.)	I (in./ hr.) (5 YR)	I (in./ hr.) (100 YR)	COEFF. C (5 YR)	COEFF. C (100 YR)	CA (5 YR)	CA (100 YR)	Q (5 YR)	Q (100 YR)	Sum Tc (min.)	I (in./ hr.) (5 YR)	I (in./ hr.) (100 YR)	CA (5 YR)	CA (100 YR)	Q (5 YR)	Q (100 YR)	DITCH OR GUTTER	ROUGHNESS	DESTINATION DP	SLOPE %	LENGTH (FT)	VEL. (FPS)	TRAVEL TIME Tt
I01	1	3.7	18.9	2.90	5.37	0.55	0.65	2.03	2.40	**5.9**	**13**						**5.9**	**13**							
I02	2	2.7	20.6	2.77	5.13	0.55	0.65	1.47	1.74	**4.1**	**9**						**4.1**	**8.9**	G	0.015	I04	1.00%	720	2.0	6.0
I03	3	2.0	18.9	2.90	5.37	0.55	0.65	1.10	1.30	**3.2**	**7**						**3.2**	**7.0**							
X01	4	15.6	21.0	2.74	5.08	0.90	0.90	14.00	14.00	**38**	**71**						**38**	**71**							
I04	5	5.0	17.8	2.99	5.54	0.55	0.65	2.75	3.25	**8.2**	**18.0**	26.6	2.41	4.46	3.2	4.0	**8.2**	**18**							
X02	6	1.8	17.0	3.06	5.67	0.55	0.65	0.96	1.14	**2.9**	**6**						**3**	**6.4**							
EI01	7	1.9	15.3	3.22	5.97	0.60	0.75	1.14	1.43	**3.7**	**9**						**3.7**	**8.5**							
EI02	8	1.5	10.9	3.73	6.92	0.70	0.82	1.04	1.22	**3.9**	**8**						**3.9**	**8.4**							
EI03	9	6.5	23.7	2.57	4.76	0.71	0.83	4.62	5.35	**11.9**	**25**						**12**	**25**							
EI04	10	1.8	14.9	3.26	6.04	0.75	0.85	1.38	1.56	**4.5**	**9**						**4.5**	**9.4**							
EI05	11	2.0	15.0	3.25	6.02	0.78	0.87	1.52	1.69	**4.9**	**10**						**4.9**	**10**							

UPSTREAM BASIN	UPSTREAM DESIGN POINT	INLET FLOW							SYSTEM FLOW							TRAVEL TIME						
		Tc (Min.)	I (in./ hr.) (5 YR)	I (in./ hr.) (100 YR)	CA (5 YR)	CA (100 YR)	Q (5 YR)	Q (100 YR)	Sum Tc (min.)	I (in./ hr.) (5 YR)	I (in./ hr.) (100 YR)	CA (5 YR)	CA (100 YR)	Q (5 YR)	Q (100 YR)	PIPE DIA	ROUGHNESS (n)	DESTINATION DP	SLOPE %	LENGTH (FT)	VEL. (FPS)	TRAVEL TIME Tt
1	I01	18.9	2.90	5.37	2.03	2.40	5.9	13						**5.9**	**13**	18	0.013	J01	2.44%	8.19	9.3	0.0
2	I02	20.6	2.77	5.13	0.98	0.98	2.7	5						**2.7**	**5.0**	18	0.013	J01	1.26%	31.85	6.7	0.1
	J01								20.7	2.76	5.12	3.01	3.38	**8.3**	**17**	24	0.013	J02	1.51%	13.27	8.9	0.0
3	I03	18.9	2.90	5.37	1.10	1.30	3.2	7.0						**3.2**	**7.0**	18	0.013	J02	1.04%	47.91	6.1	0.1
	J02								20.7	2.76	5.12	4.11	4.68	**11**	**24**	24	0.013	J03	2.30%	294.09	11.0	0.4
4	X01	21.0	2.74	5.08	14.00	14.00	38	71						**38**	**71**	42	0.013	J03	1.00%	160.00	10.5	0.3
	J03								21.2	2.73	5.06	18.12	18.68	**49**	**94**	48	0.013	J04	0.50%	447.12	8.1	0.9
5	I04	17.8	2.99	5.54	2.75	3.25	8.2	18						**8.2**	**18**	24	0.013	J04	4.63%	41.03	15.5	0.0
	J04								22.1	2.67	4.94	20.87	21.93	**56**	**108**	48	0.013	X02	6.99%	100.70	30.3	0.1
6	X02	17.0	3.06	5.67	0.96	1.14	2.9	6.4	22.1	2.66	4.94	21.83	23.07	**58**	**114**	48	0.013	EI03	0.73%	70.95	9.8	0.1
7	EI01	15.3	3.22	5.97	1.14	1.43	3.7	8.5						**3.7**	**8.5**	24	0.013	EI01	0.50%	140.90	5.1	0.5
	EJ01								15.7	3.17	5.88	1.14	1.43	**3.6**	**8.4**	24	0.013	EI02	1.95%	142.90	10.1	0.2
8	EI02	10.9	3.73	6.92	1.04	1.22	3.9	8.4						**3.9**	**8.4**	24	0.013	EI02	1.47%	62.00	8.8	0.1
9	EI03	23.7	2.57	4.76	4.62	5.35	11.9	25						**12**	**25**	24	0.013	EI02	5.10%	18.00	16.3	0.0
	EJ02								23.7	2.57	4.75	6.80	7.99	**17**	**38**	36	0.013	EI03	2.20%	147.90	14.0	0.2
	EJ03								23.9	2.56	4.73	28.63	31.05	**73**	**147**	48	0.013	EI04	0.50%	82.40	8.1	0.2
	EJ04								24.1	2.55	4.72	28.63	31.05	**73**	**146**	48	0.013	EI05	0.50%	348.98	8.1	0.7
	EJ05								24.8	2.50	4.64	28.63	31.05	**72**	**144**	48	0.013	EI06	0.50%	300.38	8.1	0.6
	EJ06								25.4	2.47	4.58	28.63	31.05	**71**	**142**	48	0.013	EI07	1.50%	353.92	14.0	0.4
	EJ07								25.8	2.45	4.53	28.63	31.05	**70**	**141**	48	0.013	EI08	1.30%	353.47	13.1	0.5
10	EI04	14.9	3.26	6.04	1.17	1.17	3.8	7.1						**3.8**	**7.1**	18	0.013	EI08	1.90%	68.31	8.2	0.1
	EJ08								26.3	2.42	4.49	29.81	32.22	**72**	**145**	48	0.013	EI09	1.10%	42.12	12.0	0.1
11	EI05	15.0	3.25	6.02	1.27	1.25	4.1	7.6						**4.1**	**7.6**	18	0.013	EI09	6.00%	41.67	14.6	0.0
	EJ09								26.3	2.42	4.48	31.08	33.48	**75**	**150**	48	0.013	OS1	0.40%	393.21	7.2	0.9

TECH CONSTRUCITON CORP.
10305 ANGELES ROAD
PEYTON, CO 80831
TELEPHONE: 719.495.7444

MERIDIAN RANCH

MERIDIAN RANCH FILING 4B
FINAL DRAINAGE PLAN
FIGURE 6

Drawn by: LCG
Checked by: TAK
Date
Scale: AS SHOWN
Sheet Number

S:\Civil\Proj\Meridian Ranch Filing 4B\dwg\Plan Sheets\Basin Maps\FD\FD\FIG-4B-R.ATJ.dwg, 7/10/2014 8:33:04 AM