TO: **El Paso County Planning Commission**
Brian Risley, Chair

FROM: **Ryan Howser, Planner II**
Lupe Packman, El Engineer I
Craig Dossey, Executive Director

RE: **Project File #: U-21-002**
Project Name: EPC Mountain View Fiber Project
Parcel No.: N/A

OWNER:	REPRESENTATIVE:
Mountain View Electric Association 11140 E. Woodmen Road Falcon CO 80831	Mountain View Electric Association 11140 E. Woodmen Road Falcon CO 80831

Commissioner Districts: **1, 2, 3, and 4**

Planning Commission Hearing Date:	**11/18/2021**

EXECUTIVE SUMMARY

A request by Mountain View Electric Association (MVEA) for an approval of location to allow for the construction of infrastructure related to a new fiber optic service for residents of El Paso County. The project is proposed to be construction on numerous properties throughout El Paso County and is comprised of the installation of underground and overhead fiber optic lines, which as designed will be contained within easements and public rights-of-way. The proposal also includes construction of one (1) small structure proposed to be located on an existing MVEA substation property. Should the Planning Commission approve the location and extent of the fiber optic infrastructure project, the applicant will be required to submit and receive approval of a site development plan prior to initiating construction of the proposed fiber lines and associated structure.

A. REQUEST/WAIVERS/DEVIATIONS/AUTHORIZATION

Request: A request for an approval of location to allow for new fiber optic service lines and associated structures.

Waiver(s)/Deviation(s): There are no waivers or deviations requested with the approval of location.

Authorization to Sign: There are no documents associated with this application that require signing.

B. PLANNING COMMISSION SUMMARY

Request Heard:
Recommendation:
Waiver Recommendation:
Vote:
Vote Rationale:
Summary of Hearing:
Legal Notice:

C. APPROVAL CRITERIA

Section 5.3.3.J, Approval of Location, Review Standards, of the Land Development Code (2021) states:

> "The application for a public use, structure or utility is reviewed for conformity with the submittal and processing requirements included within this Code and Procedures Manual and for conformity with the adopted Master Plan."

D. LOCATION

The utility lines are proposed to be within easements and rights-of-way throughout El Paso County (see attached service area map). Maintenance structures associated with the utility lines are proposed to be constructed on existing MVEA substation properties.

E. BACKGROUND

An Early Assistance meeting was held on September 2, 2021 to discuss the permitting process for establishing a new fiber optic service for residents of El Paso County. The El Paso County Guidelines and Regulations for Areas and Activities of State Interest (aka "1041 Regulations") do not apply to fiber optic infrastructure; therefore, a 1041 Permit is not required.

Section 1.15 of the El Paso County Land Development Code (2021) defines an "Approval of Location" as:

> "[T]he process authorized by CRS §30-28-110(1) whereby the Planning Commission reviews and approves the location and extent of any road, park, public way, ground or space, public building or structure, or public utility (whether publicly or privately owned and constructed)."

The proposed utility lines and structures are owned and operated by Mountain View Electric Association (MVEA); therefore, the proposed development qualifies as an approval of location in accordance with the Code. An approval of location is necessary per C.R.S. 30-28-110 and Section 5.3.3 of the Code. Should the approval of location be approved, the applicant will be required to submit and receive administrative approval of a site development plan prior to initiating construction of the proposed utility lines and associated structures.

F. ANALYSIS

1. Land Development Code Analysis

The request for approval of location is reviewed for conformity with the requirements of the Land Development Code and for conformity with the County Master Plan. Staff recommends that the proposed use complies with Section 5.3.3 of the Code regarding approval of location and C.R.S. 30-28-110, with the conditions and notations.

2. Zoning Compliance

The proposed utility structure is located on a parcel zoned RR-5 (Rural Residential). The RR-5 zoning district is intended to accommodate low-density, rural, single family residential development. The density and dimensional standards for the RR-5 zoning district are as follows:

- Minimum lot size: 5 acres *
- Minimum width at the front setback line: 200 feet
- Minimum setback requirement: front 25 feet, rear 25 feet, side 25 feet **
- Maximum lot coverage: 25 percent
- Maximum height: 30 feet

* In the event that the land to be partitioned, platted, sold or zoned abuts a section line County road, the minimum lot area for lots abutting the road shall be 4.75 acres and minimum lot width shall be 165 ft.

**Agricultural stands shall be setback a minimum of 35 feet from all property lines.

Section 5.4.3.C.3. of the Code states:

> "Public or Quasi-Public Utility Buildings not subject to standards: Utility buildings or facilities owned by a governmental, quasi-governmental or public entity are not subject to the development standards of the respective zoning district, but are instead governed by the standards of the approval of location, site development plan, or site plan submitted with the development application."

Public buildings are exempt from the dimensional standards; however, the site plan submitted in association with the approval of location depicts the proposed structures meeting the underlying zoning district dimensional standards. The utility lines will be located within easements and rights-of-way.

3. **Master Plan Analysis**
   a. **Your El Paso Master Plan (2021)**
   The scope of the project is large and covers much of El Paso County. The project is not contained within one single placetype, key area, or area of change. However, the Your El Paso Master Plan (2021) places an emphasis on the importance of utility service availability, including the provision of broadband services and installation of fiber optics. Broadband service is sparse in the eastern portions of the County and the County recognizes the importance of improving broadband access for underserved El Paso County residents. The Master Plan recognizes the importance of establishing partnerships with utility service providers to improve service in these portions of the County, which include the Calhan and Black Forest areas. Specifically, Chapter 8, Page 109, of the Master Plan states:

> "The County recognizes the importance of improving broadband access for underserved El Paso County residents. Real broadband service throughout the County will drive social and economic benefits for businesses, residents, and the public sectors. The creation of effective public-private partnerships will enable the County to target the use of scarce resources such as staff time and County budget to the areas in which the highest potential impact can occur."

Broadband infrastructure is scarce in the eastern portions of the County. By improving broadband access for these areas, service providers can provide better service for their customers which can in turn help drive economic development in areas where it may not have previously been practical or feasible.

The relevant goal, objective, and specific strategy are as follows:

> ***Goal CF13 –*** *Ensure adequate provision of utilities to manage growth and development.*
>
> ***Objective CFI3-7 –*** *Create public-private partnerships to extend broadband infrastructure.*
>
> ***Specific Strategy –*** *Develop assets that align to a strategic plan and make them available through partnerships with the private sector in order to address underserved broadband areas.*

The Approval of Location process is the first step in expanding broadband infrastructure to provide service to those areas of the County identified as underserved. Construction of fiber optic infrastructure will improve the availability of services and may help ensure that future growth and development is adequately served by utility services.

According to data included on Page 10 of the Master Plan, El Paso County is projected to increase in population by roughly 256,000 by 2050, which represents an approximate 35% increase in population from 2019. Due to the County's rapidly growing population and projected future growth, it is imperative to ensure that improved access to scarce resources is prioritized.

All construction is proposed to occur within designated utility easements and public rights-of-way, and all structures are proposed to be located on existing substation properties. The proposed utility project will not adversely impact the character of any areas of the County as installation of all infrastructure is proposed where existing utility infrastructure already exists. Future infrastructure is likely to be in the same manner and additional easements will not likely be necessary to support the future installations of fiber optic infrastructure.

b. Water Master Plan Analysis

The El Paso County Water Master Plan (2018) has three main purposes; better understand present conditions of water supply and demand; identify efficiencies that can be achieved; and encourage best practices for water demand management through the comprehensive planning and development review processes. Relevant policies are as follows:

> ***Goal 1.1 –*** *Ensure an adequate water supply in terms of quantity, dependability and quality for existing and future development.*
>
> ***Policy 1.1.1 –*** *Adequate water is a critical factor in facilitating future growth and it is incumbent upon the County to coordinate land use planning with water demand, efficiency and conservation.*
>
> ***Goal 1.2 –*** *Integrate water and land use planning.*

The project is proposed to be constructed throughout El Paso County and will not be limited to a specific Planning Region identified in the Water Master Plan. However, much of the installation is proposed to be located within Region 2, Monument Area, Region 3, Falcon Area, and Region 4c. All of these Regions are expected to experience growth by 2060, with the most substantial growth expected in Regions 2 and 3. As previously stated in the above sections, improved access to broadband services will be important to help manage the projected growth in these areas as well as to provide connectivity to other areas of the County where water resources may be scarcer.

Water and wastewater services will not be necessary for integration of fiber optic infrastructure. All structures associated with this improvement will be located on existing unmanned MVEA substation properties.

4. Other Master Plan Elements

The El Paso County Wildlife Habitat Descriptors (1996) are not applicable since the utility lines are proposed to be located within easements and rights-of-way throughout El Paso County. The following agencies were each sent a referral: El Paso County Community Services, Environmental Division, El Paso County Community Services, Parks and Recreation Division, State of Colorado Parks and Wildlife, Colorado State Forest Service, United States Army Corps of Engineers, United States Fish & Wildlife, Ecological Services, United States

Forest Service, Pikes Peak Ranger District, Double El Conservation District, El Paso County Conservation District, and Kiowa Conservation District. To date, none of the agencies have any outstanding comments.

Please see the Master Plan for Mineral Extraction (1996) Aggregate Resource Evaluation map included herein for a list of mineral deposits throughout El Paso County. Due to the scope of the project, and the proposed locations of the infrastructure within utility easements and public rights-of-way, a mineral rights certification was not required. The proposed utility project is proposed where existing utility infrastructure already exists and it is not likely that additional mineral deposits will be impacted.

Please see the Parks/Trails section below for information regarding The El Paso County Parks Master Plan (2013).

Please see the Transportation section below for information regarding the El Paso County 2016 Major Transportation Corridors Plan Update (MTCP).

G. PHYSICAL SITE CHARACTERISTICS

1. Hazards

No hazards were noted during the review of the approval of location. The utility lines are proposed to be located within easements and rights-of-way throughout El Paso County. Specific line orientations and locations will be provided with the individual construction drawing review application(s) and any hazards will be identified and reviewed at that time.

2. Wildlife

The El Paso County Wildlife Habitat Descriptors (1996) are not applicable since the utility lines are proposed to be located within easements and rights-of-way throughout El Paso County. To date, none of the agencies which were sent a referral have any outstanding comments.

3. Floodplain

The utility lines are proposed to be located within easements and rights-of-way throughout El Paso County and may be located within several FEMA designated floodplains. Appropriate requirements will be assessed with the subsequent construction drawing review applications, if applicable. Since the utility project is proposed where existing utility infrastructure already exists, it is not likely that the floodplain will be impacted.

4. **Drainage and Erosion**
   Drainage and bridge fees are not applicable to approvals of location. In addition, drainage and bridge fees do not apply to subsequently submitted construction drawing review applications.

   A grading and erosion control plan and drainage report are not required with an approval of location; however, approvals of such documents will need to occur with the subsequent construction drawing review applications.

5. **Transportation**
   This project consists primarily of construction of utility infrastructure and is not projected to cause a significant increase to traffic on County facilities or conflict with the El Paso County 2016 Major Transportation Corridors Plan Update (MTCP).

   The development is subject to the El Paso County Road Impact Fee Program (Resolution No. 19-471). The fee amount will be determined at the final land use approval or driveway access permit, whichever comes second. The land use of public/ institutional according to the Road Impact Fee Schedule will be used to determine fees.

H. SERVICES

1. **Water**
   Water service is not necessary for the proposed utility project.

2. **Sanitation**
   Wastewater service is not necessary for the proposed utility project.

3. **Emergency Services**
   The project is located within several fire protection districts. The following fire protection review authorities were each sent a referral: EPC Fire Marshal, Big Sandy Fire Protection District, Black Forest Fire Protection District, Calhan Fire Protection District, Donald Wescott Fire Protection District, Edison Volunteer Fire Department, Ellicott Fire Protection District, Falcon Fire Protection District, Fountain Fire Department, Hanover Fire Protection District, Palmer Lake Volunteer Fire Department, Peyton Fire Protection District, Security Fire Protection District, Southwestern Hwy 115 Fire Protection District, Stratmoor Hills Fire Department, Tri-County Fire Protection District, and Tri-Lakes-Monument Fire Protection District. To date, none of the agencies have any outstanding comments.

4. **Utilities**
   Electrical service is provided by Mountain View Electric Association, Inc. (MVEA). All construction is projected to occur within existing easements, on MVEA-owned property, and within County rights-of-way.

5. **Metropolitan Districts**
   The project is located within several Metropolitan Districts. The following Districts were each sent a referral: Bent Grass Metropolitan District, Bobcat Meadows Metropolitan District, Bradley Heights Metropolitan District, Cathedral Pines Metropolitan District, Central Marksheffel Metropolitan District, Cherokee Metropolitan District, Colorado Centre Metropolitan District, Ellicott Metropolitan District, Ellicott Town Center Metropolitan District, Falcon Highlands Metropolitan District, Falcon Regional Transportation Metropolitan District, Forest Lakes Metropolitan District, Four Way Ranch Metropolitan District, Lake of the Rockies Metropolitan District, Latigo Creek Metropolitan District, Lorson Ranch Metropolitan District, Lower Fountain Metropolitan Sewage Disposal District, Meridian Ranch/Meridian Service Metropolitan District, Norris Ranch Metropolitan Districts Nos. 1 & 2, Paint Brush Hills Metropolitan District, Pinon Pines Metropolitan District, Red Rock Valley Metropolitan Water District, Rock Springs Metropolitan District, Rock Springs Ranch Metropolitan District 1-3, Rolling Hills Ranch Metropolitan District, Sanctuary Metropolitan District, Santa Fe Springs Metropolitan Districts 2 & 3, Sterling Ranch Metropolitan District 1-3, Sunset Metropolitan District, Triview Metropolitan District, Ventana Metropolitan District, Walden Metropolitan Districts 1 & 2, Waterview 1 & 2 Metropolitan District, Willow Springs Ranch Metropolitan District, Winsome Metropolitan District, Woodmen Heights Metropolitan District, Woodmen Hills Metropolitan District, and Woodmen Road Metropolitan District. To date, none of the agencies have any outstanding comments.

6. **Parks/Trails**
   Land dedication and fees in lieu of park land dedication are not required for an approval of location. Due to the nature and scope of the project, it may be possible that parks or trails identified within The El Paso County Parks Master Plan (2013) may be impacted by the location of infrastructure lines. The El Paso County Community Services Department, Parks and Recreation Division, was sent a referral for the approval of location and has no outstanding comments. The Parks and Recreation Division will be included as a referral agency on the future review of all construction drawings for any portions of the lines or any structures in the proximity of an El Paso County park or trail.

7. **Schools**
   Land dedication or fees in lieu of school land dedication are not required for an approval of location.

I. APPLICABLE RESOLUTIONS

Approval Page 11
Disapproval Page 12

J. STATUS OF MAJOR ISSUES

There are no major outstanding issues.

K. RECOMMENDED CONDITIONS AND NOTATIONS

Should the Planning Commission find that the request meets the criteria for approval outlined in Section 5.3.3 of the El Paso County Land Development Code (2021), staff recommends the following conditions and notations:

CONDITIONS

1. No substantial expansion, enlargement, or modification of the site development plan shall be allowed except upon reevaluation and public hearing as specified in the El Paso County Land Development Code.

2. Any construction that is proposed to occur within El Paso County public right-of-way shall require review and approval of a permit for work in the right-of-way pursuant to the regulations of the El Paso County Department of Public Works.

3. Any construction that is proposed to occur outside of El Paso County public right-of-way shall require construction drawing review and administrative approval by Planning and Community Development Department prior to commencement of construction.

4. The proposed use shall comply with all requirements of the El Paso County Land Development Code and all County, State, and federal regulations except for those portions varied by this action.

5. The applicant shall be required to pay traffic impact fees in accordance with the El Paso County Road Impact Fee Program Resolution (Resolution No. 19-471), or any amendments thereto, at the final land use approval or driveway access permit, whichever comes second. The land use of public/ institutional according to the Road Impact Fee Schedule will be used to determine fees.

NOTATION

1. Approval of location requests are not forwarded to the El Paso County Board of County Commissioners for consideration. Pursuant to C.R.S. § 30-28-110, the final El Paso County action occurs at the Planning Commission.

L. PUBLIC COMMENT AND NOTICE

The Planning and Community Development Department posted an advertisement for the Planning Commission hearing in the Fountain Valley News Shopper's Press on November 3, 2021. Any responses received will be provided at the hearing.

M. ATTACHMENTS

Vicinity Map
Letter of Intent
Site Plan
Aggregate Resource Evaluation Map

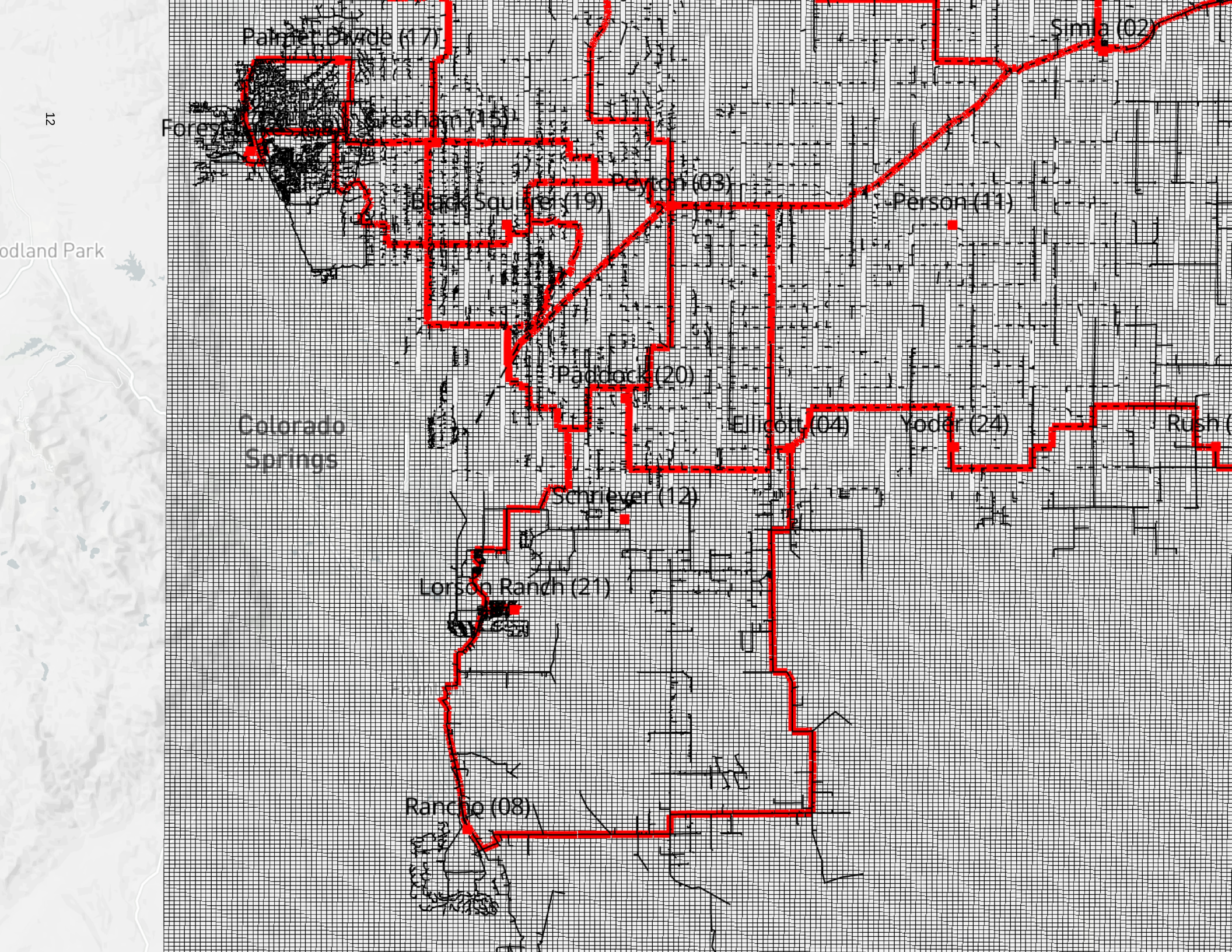
Palmer Divide (17)
Simla (02)
Forest View (16)
Freshan (15)
Peyton (03)
Black Squirrel (19)
Person (11)
odland Park
Paddock (20)
Colorado
Springs
Elliott (04)
Yoder (24)
Rush (
Schriever (12)
Lorson Ranch (21)
Rancho (08)

October 22, 2021

El Paso County
Planning and Community Development Department
2880 International Circle, Suite 110
Colorado Springs, CO 80910

Re: Letter of Intent for Mountain View Electric Fiber infrastructure

Dear Planning Staff,

Conexon is submitting this Letter of Intent on behalf of Mountain View Electric in accordance with the requirements of the El Paso County Approval of Location and Site Development Plan applications. The proposed project consists of the development and construction of a fiber distribution network on existing Mountain View Electric utilities. The new fiber distribution network will be used to increase efficiency in the Mountain View Electric system as well as serve all Mountain View Electric members with broadband internet access in the near future. Additional project details are provided below.

Applicant and Consultant

The Applicant and Consultant contact information is as follows:

Applicant

Mountain View Electric Association
11140 East Woodmen Road
Falcon, CO 80831
Contact: Amanda Hall
Telephone: 719-495-2283
Email: Amanda.h@mvea.coop

Consultant
Conexon LLC
2001 Grand Blvd Suite 700
Kansas City, Mo 64108
Contact: Blake Nations
Telephone: 601-618-7561
Email: blake.nations@conexon.us

Site Location, Size and Zoning

The proposed site for the gravel staging area is located at 5315 Dodge Road Peyton Co 80831. Please see the Vicinity Map for the site location (Attachment 1). The overall parcel is approximately 4.3 acres. Current zoning RR-0.5. The Site plan for the hut is attachment #2.

Request and Justification

The scope of the project includes the development and deployment of a fiber distribution network on existing MVEA electrical poles, easements and ROW's. The project has an immediate impact to increase the capabilities and efficiencies of MVEA's electrical system and in the near future will provide world class broadband to all members of MVEA. This service will allow all persons the ability to utilize broadband internet for personal and professional development.

Existing and Proposed Facilities, Structures, and Roads

The existing site is an electrical substation. This location is just the origination location for the fiber deployment. There will be a 10x20 concrete structure placed on the site for housing of electrical equipment. Otherwise the only work to be done on this location will be hydraulic directional drilling to supply 1.25" conduit into the structure in order to deploy the fiber infrastructure.

The site plan is attached as attachment #2.

There will be no other new facilities, structures or roads.

Waiver Request and Justification

Conexon is requesting a partial waiver from the landscape requirements found in the El Paso County Land Development Code [LDC 6.2.2.(G)(1)(f) Outside Storage Landscaping Requirements]. There will not be new construction or development to landscape. The construction will take place on existing MVEA ROW and poles

Elevation and Floor Plans

There will be one new building placed for this portion of the project. The attached elevation and floor plan is attached below (attachment #3) All construction will take place underground alongside existing MVEA utilities or overhead on existing MVEA poles.

Sign Plan

A sign plan is not required for this portion of the project.

Traffic Information

During the installation of the 10x20' fiber optic electronics hut there will be one drivable crane and 1-2 POV trucks on site. None of the work will take place on public easement, row or roadside. Therefore no traffic information will be needed. The trucks will enter the property off of Dodge road and all work and staging will take place on MVEA owned property.

Lighting Plan

There will not be a lighting plan as all work will take place during the day light and be completed during daylight hours.

If you have questions regarding the material included in this Letter of Intent or the application materials, please contact me at blake.nations@conexon.us or 6016187561.

Sincerely,

Blake Nations
Regional Project director

Attachments:

1. Vicinity Map
2. Site Plan Drawing
3. Floor Plan

Attachment 1 (Vicinity Map)

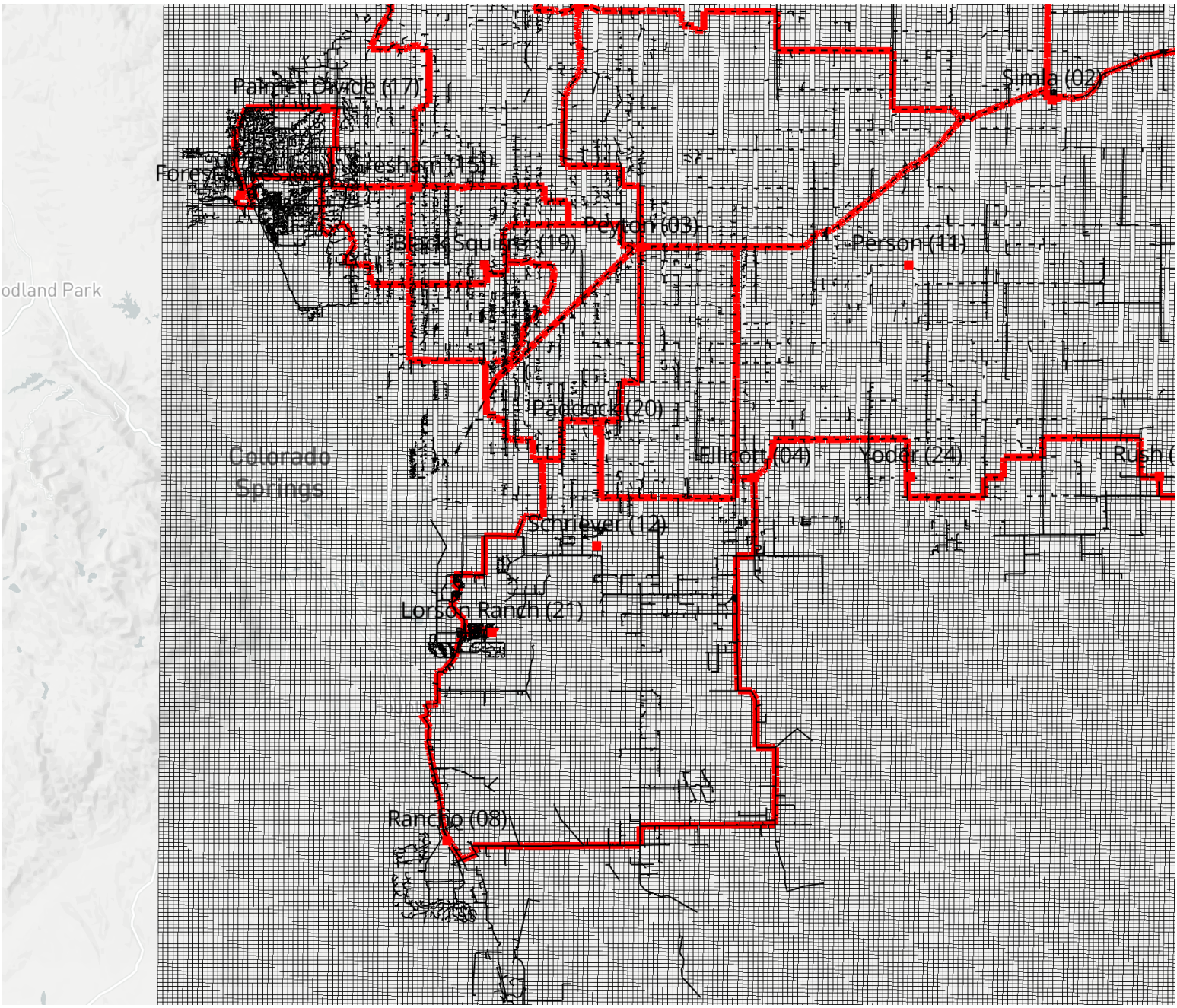

This is a very broad overview of the project map. Due to the scale we can not provide anything more detailed.

The road to the left (west) is Dodge Road the map is oriented with North at the top

Attachment #3 elevation and floor plan

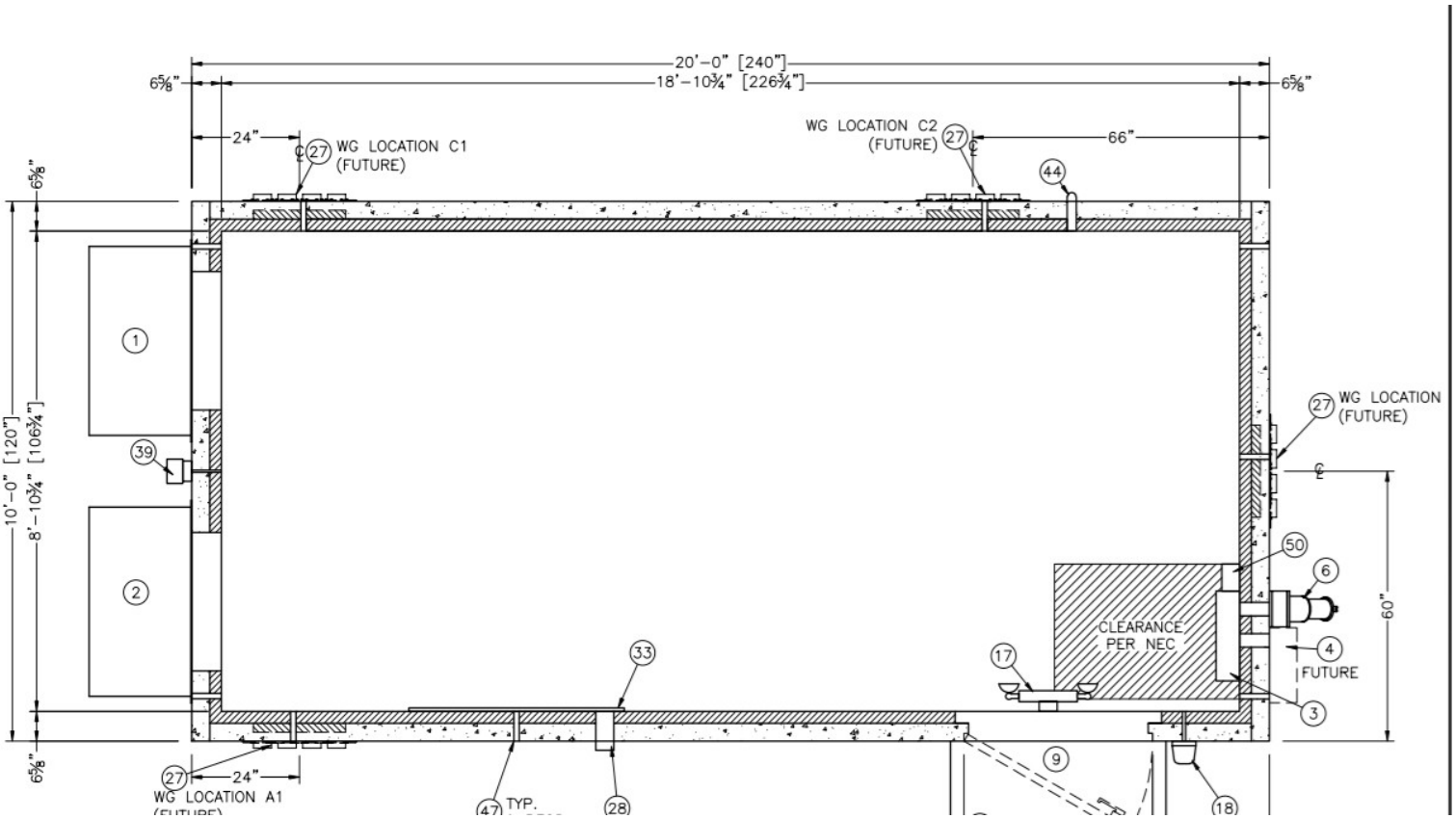

Top View

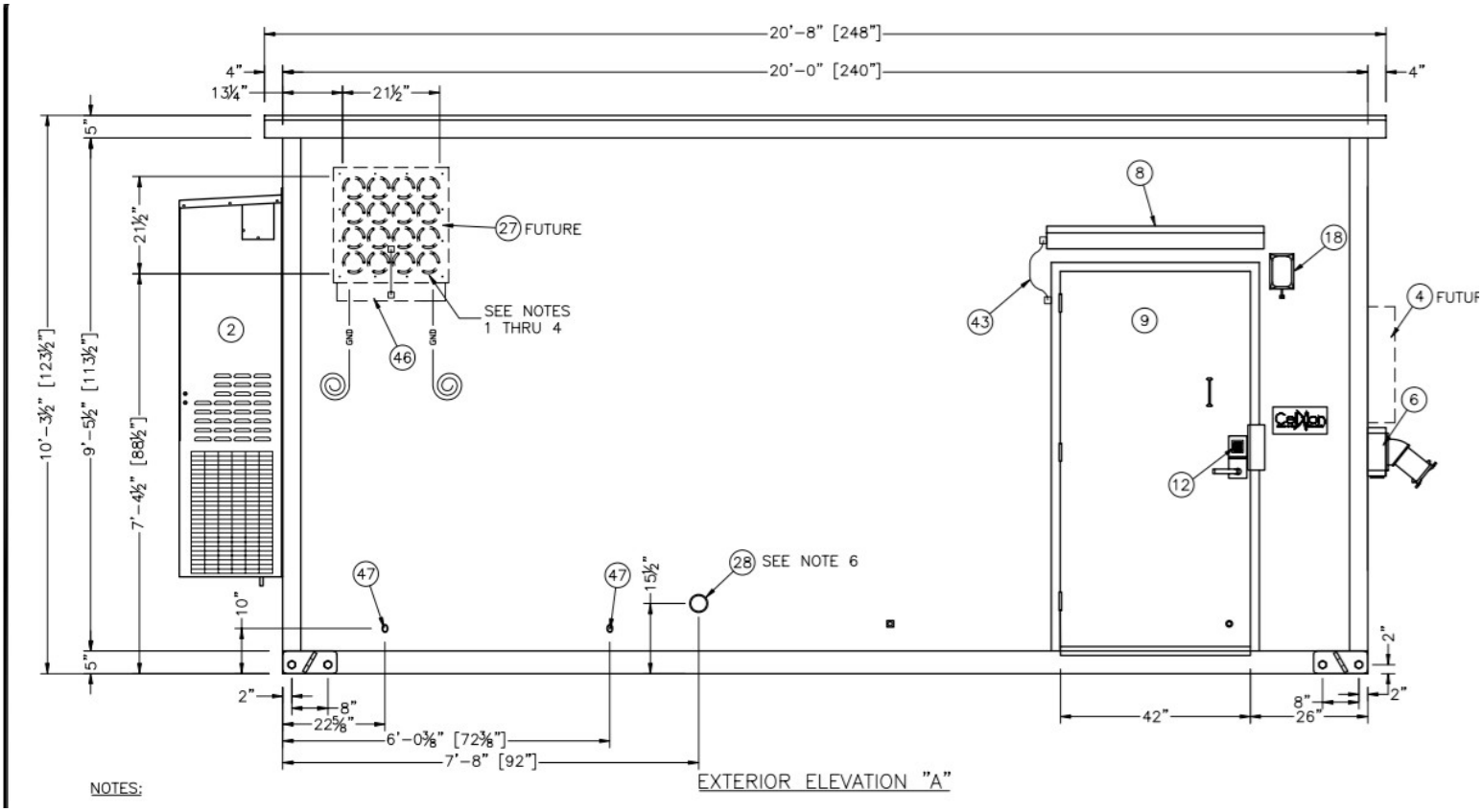

Side View

MOUNTAIN
VIEW
ELECTRIC
ASSOC
INC

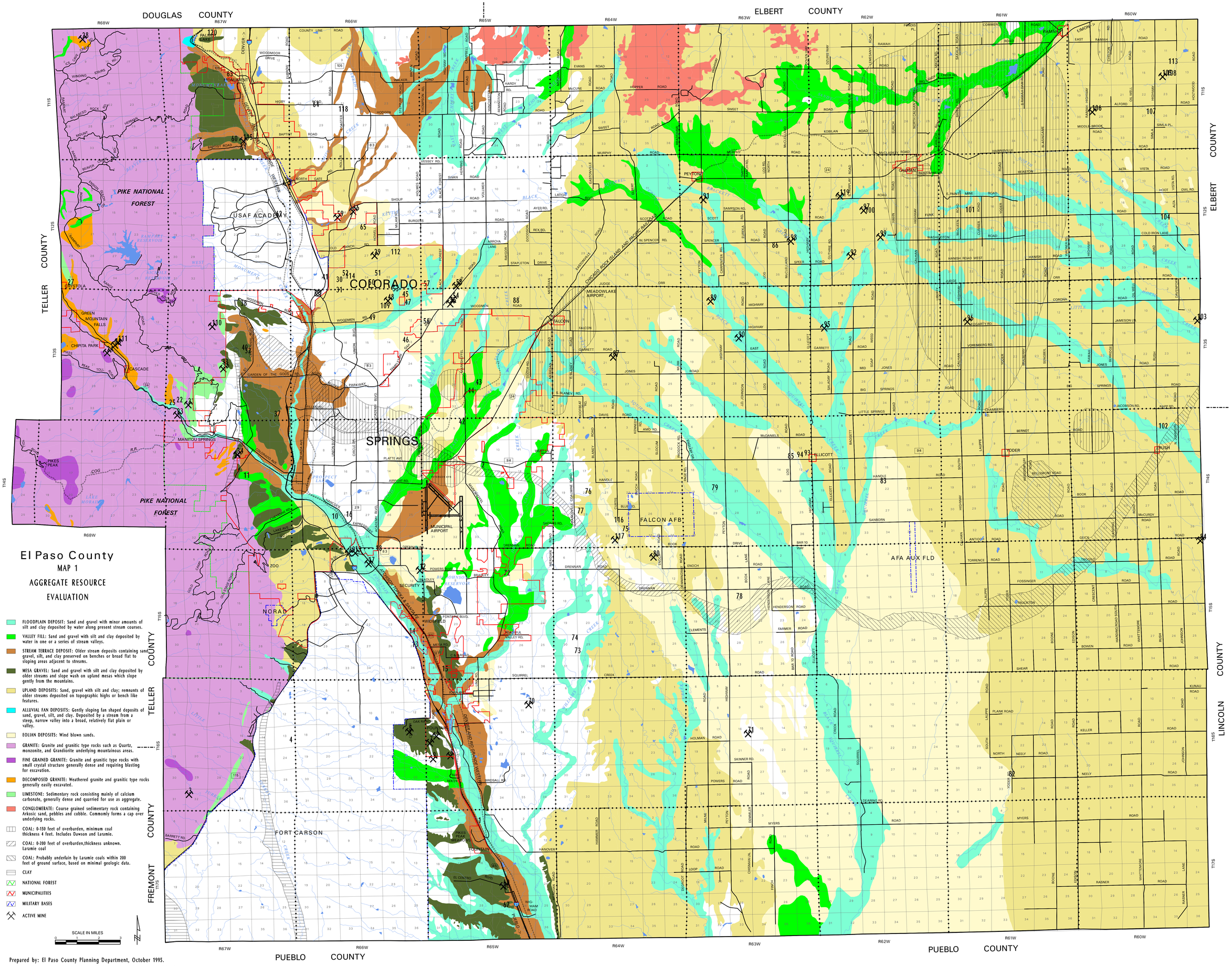

El Paso County
MAP 1
AGGREGATE RESOURCE EVALUATION

- FLOODPLAIN DEPOSIT: Sand and gravel with minor amounts of silt and clay deposited by water along present stream courses.
- VALLEY FILL: Sand and gravel with silt and clay deposited by water in one or a series of stream valleys.
- STREAM TERRACE DEPOSIT: Older stream deposits containing sand gravel, silt, and clay preserved on benches or broad flat to sloping areas adjacent to streams.
- MESA GRAVEL: Sand and gravel with silt and clay deposited by older streams and slope wash on upland mesas which slope gently from the mountains.
- UPLAND DEPOSITS: Sand, gravel with silt and clay; remnants of older streams deposited on topographic highs or bench like features.
- ALLUVIAL FAN DEPOSITS: Gently sloping fan shaped deposits of sand, gravel, silt, and clay. Deposited by a stream from a steep, narrow valley into a broad, relatively flat plain or valley.
- EOLIAN DEPOSITS: Wind blown sands.
- GRANITE: Granite and granitic type rocks such as Quartz, monzonite, and Grandiorite underlying mountainous areas.
- FINE GRAINED GRANITE: Granite and granitic type rocks with small crystal structure generally dense and requiring blasting for excavation.
- DECOMPOSED GRANITE: Weathered granite and granitic type rocks generally easily excavated.
- LIMESTONE: Sedimentary rock consisting mainly of calcium carbonate, generally dense and quarried for use as aggregate.
- CONGLOMERATE: Course grained sedimentary rock containing Arkosic sand, pebbles and cobble. Commonly forms a cap over underlying rocks.
- COAL: 0-150 feet of overburden, minimum coal thickness 4 feet. Includes Dawson and Laramie.
- COAL: 0-200 feet of overburden,thickness unknown. Laramie coal
- COAL: Probably underlain by Laramie coals within 200 feet of ground surface, based on minimal geologic data.
- CLAY
- NATIONAL FOREST
- MUNICIPALITIES
- MILITARY BASES
- ACTIVE MINE

SCALE IN MILES
0 1 2 3

Prepared by: El Paso County Planning Department, October 1995.
Sources: Empire Laboritories, Inc., CO Mined Land Reclamation Division