FINAL DRAINAGE LETTER

FOR

LOT 13, CLAREMONT BUSINESS PARK
FILING NO. 2
EL PASO COUNTY, COLORADO

NOVEMBER 2018

Prepared for:

Hammers Construction, Inc.
1411 Woolsey Heights
Colorado Springs, CO 80915

Prepared by:

CIVIL CONSULTANTS, INC.

20 Boulder Crescent, Suite 110
Colorado Springs, CO 80903
(719) 955-5485

Project #44-028
PCD Project No. PPR-18-044

DRAINAGE LETTER
FOR
Lot 13, Claremont Business Park Filing No. 2

DRAINAGE PLAN STATEMENTS

ENGINEERS STATEMENT

The attached drainage plan and report was prepared under my direction and supervision and are correct to the best of my knowledge and belief. Said drainage report has been prepared according to the criteria acceptable to the City of Colorado Springs. I accept responsibility for any liability caused by any negligent acts, errors of omission on my part in preparing this report.

COLORADO REGISTERED
VIRGIL A. SANCHEZ
37160
1-08-2019
PROFESSIONAL ENGINEER

Virgil A. Sanchez, P.E. #37160
For and on Behalf of M&S Civil Consultants, Inc

DEVELOPER'S STATEMENT

I, the developer have read and will comply with all the requirements specified in this drainage report and plan.

BY: _____

TITLE: Owner
DATE: 1/10/19

ADDRESS: Ruckus Investments
~~Hammers Construction~~, LLC
~~1411 Woolsey Heights~~ 7204 Cole Vw
Colorado Springs, CO 80915

EL PASO COUNTY'S STATEMENT

Filed in accordance with the requirements of El Paso County Land Development Code, Drainage Criteria Manual Volumes 1 and 2, and the Engineering Manual, as amended.

Approved
by Elizabeth Nijkamp
El Paso County Planning and Community Development
on behalf of Jennifer Irvine, County Engineer, ECM Administrator

BY: _____ DATE: 02/13/2019 9:02:30 AM

Jennifer Irvine, P.E.
County Engineer / ECM Administrator

CONDITIONS:

CIVIL CONSULTANTS, INC.

20 Boulder Crescent, Suite 110
Colorado Springs, CO 80903
Mail to: P.O. Box 1360
Colorado Springs, CO 80901
719.955.5485

November 5, 2018

Attn: Jennifer Irvine, P.E.
El Paso County Engineer
2880 International Circle
Colorado Springs, Colorado 80910

RE: Final Drainage Letter for Lot 13, Claremont Business Park Filing No. 2, in El Paso County, Colorado.

Dear Jennifer,

The purpose of this letter is to show that there shall be no negative drainage effects associated with the proposed development of Lot 13 within the Claremont Business Park Filing No. 2, recorded January 4, 2007 under Reception No. 207712506 of the El Paso County Records. This final drainage letter is being submitted concurrently with the improvement construction plans proposing a 5000 SF building and the associated parking improvements.

Property Description:

The proposed project site is within the Northeast Quarter of Section 8, Township 14 South, Range 65 West of the 6th Principal Meridian. Lot 13 consist of 0.5 acres and is currently vacant. The proposed project consist of all infrastructure typically associated with a 5,000 SF building structure. The majority of the site will consist of asphalt, curb, lighting, a subsurface Storm Water Quality Facility and landscaping.

Existing Drainage Characteristics:

The site, which is located Northwest of Meadowbrook Parkway, within an established commercial / light industrial neighborhood is bound to the Northeast and Northwest by the Cole View private roadway, and to the Southeast and Southwest by existing commercial lots. The site is currently vacant land with a relatively new roadway infrastructure and associated utilities with slopes ranging between 0-4 % from Northeast to Southwest. Flows from the site run along the north side of an existing retaining wall along the southern border of the property line and then eventually outfalls to an existing storm sewer collection system at the Southwest corner of the lot and ultimately discharges to the East Fork Sand Creek.

Floodplain Statement

According to the Federal Emergency Management Agency (FEMA) Flood Insurance Rate Map (FIRM) No. 08041C0752 F, dated March 17, 1997, Revision LOMR dated Aug. 6, 2018 none of the site lies in a designated flood plain. The nearest major drainage way is East Fork Sand Creek just Northwest of the commercial business park.

Proposed drainage characteristics:

The proposed project consist of all infrastructure typically associated with a 5,000 SF building structure. The majority of the site will consist of asphalt, curb, lighting, a subsurface Storm Water Quality Facility and landscaping. The subject site was previously analyzed within the Final Drainage Report for Claremont Business Park Filing No. 2 prepared by Matrix Design Group approved April 24, 2007. On-site WQCV is required but on-site stormwater detention is not required per the FDR for Claremont Business Park Fil. 2.

The developed flows from Lot 13 shall be directed to a Storm Water Quality Facility (rain garden type) located along the Northwest portion of the property line along Cole View. Flows shall enter the rain garden near the southeastern portion of the site via a curb opening (1.3 cfs for the 5-yr and 2.2 cfs for the 100-yr). the rational calculations were made knowing the existing hydraulic soil group (HSC) of type A).

Flows that penetrate the Rain Garden will discharge into an existing storm drain catch basin at the Southwest corner of the property. Overflows from the Rain Garden will overtop a berm near the southwest portion of the site and flow into Cole View as it does currently. Flows from Lots 11 and 12 that are released at the Southeast corner of Lot 13 via an existing 3' curb opening shall continue along the proposed southern curb line, and then eventually outfall to an existing storm sewer collection system at the Southwest corner of Lot 13 and ultimately discharges to the East Fork Sand Creek.

Water Quality Provisions:

The proposed Rain Garden will be built per Urban Drainage and Flood Control recommendations (see Appendix B for additional information on the Rain Garden). The Volume provided by the Rain Garden is approximately 368 cu-ft which exceeds the required Water Quality Control Volume 345cu-ft. The size of the Rain Garden is based on an impervious area of 95%, a drainage area of approximately 0.27 acres, and a runoff of 0.6-inches of precipitation per City of Colorado Springs – Drainage Criteria Manual Volume 2, See Appendix B for Design Procedure Form for Rain Garden.

FOUR STEP PROCESS

Step1 Employ Runoff Reduction Practices – The project does not provide any runoff reduction practices.

Step 2 Stabilize Drainageways – The site is indirectly adjacent to the Sand Creek Channel. The Lot 13 site proposed a Storm Water Quality Facility (Rain Garden type) before discharging East Fork Sand Creek. The development of this project does not anticipate to have negative effects on downstream drainageways.

Step 3 Provide Water Quality Capture Volume – Storm Water Quality Facility (Rain Garden type) is proposed to provide WQCV.

Step4 Consider Need for Industrial and Commercial BMP's – This submittal provides a final grading and erosion control plans with BMPs in place. The proposed project will use silt fence, a vehicle tracking control pad, and concrete washout area, mulching and reseeding to mitigate the potential for erosion across the site.

Private Water Quality Facility - Cost Estimate:

Private Subsurface Water Quality Facility: **$6,000.00**

Drainage fees:

No drainage fees are due as the site has been previous platted.

Conclusion:

No negative drainage effects associated with the proposed development of Lot 13 within the Claremont Business Park Filing No. 2.

This proposal does not conflict or change the specifications as previously detailed within the "Final Drainage Report for Claremont Business Park Filing No. 2" prepared by Matrix Design Group approved April 24, 2007.

This letter has been prepared according to the County drainage criteria and is being submitted for approval. If you have any question about this submittal, please feel free to call me at 719-491-0818 or email me at Virgils@mscivil.com

Sincerely,

COLORADO REGISTERED
VIRGIL A. SANCHEZ
37160
1-08-2019
PROFESSIONAL ENGINEER

Virgil A. Sanchez

VICINITY MAP

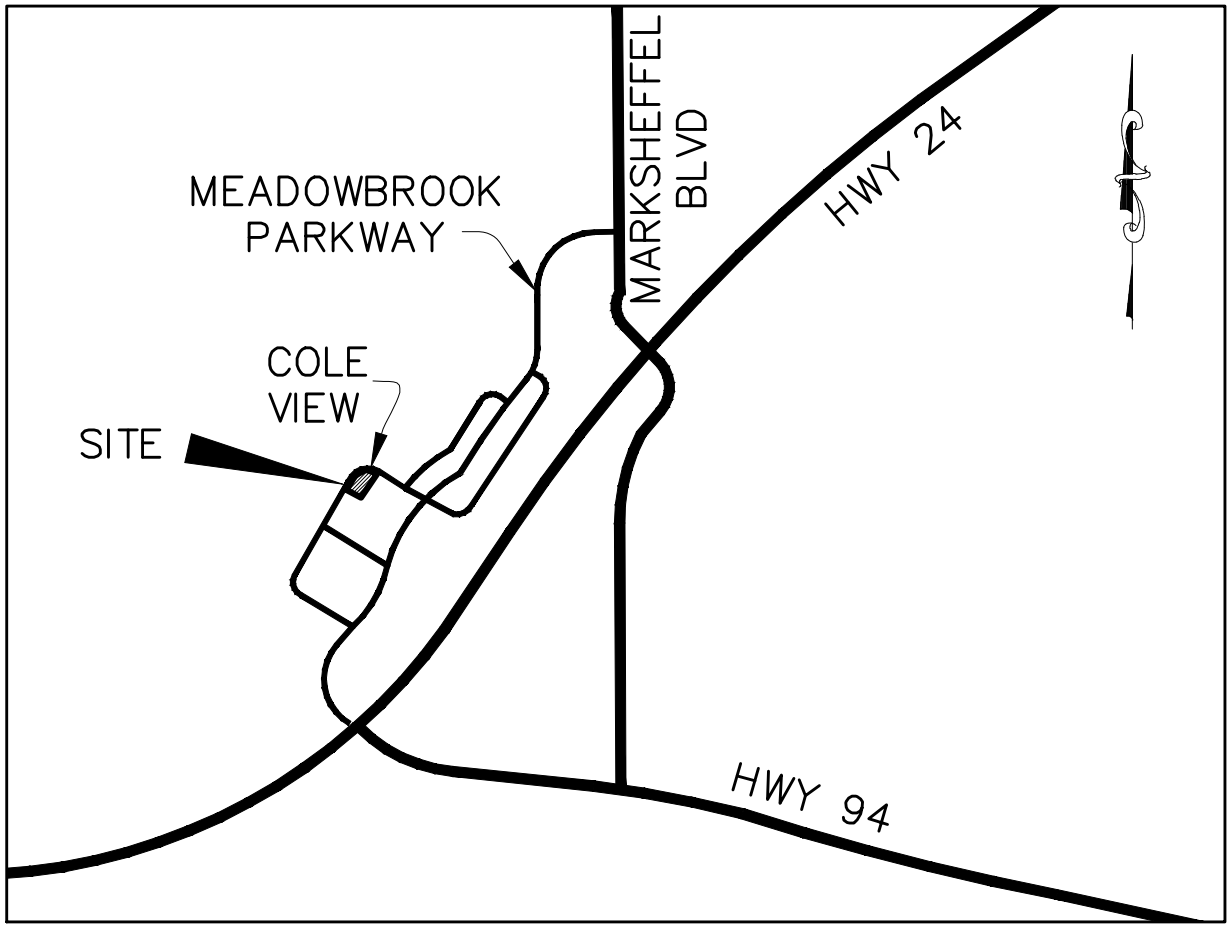

VICINITY MAP

N.T.S.

RAIN GARDEN DESIGN INFORMATION

Description

A BMP that utilizes bioretention is an engineered, depressed landscape area designed to capture and filter or infiltrate the water quality capture volume (WQCV). BMPs that utilize bioretention are frequently referred to as rain gardens or porous landscape detention areas (PLDs). The term PLD is common in the UDFCD region as this manual first published the BMP by this name in 1999. In an effort to be consistent with terms most prevalent in the stormwater industry, this document generally refers to the treatment process as *bioretention* and to the BMP as a *rain garden*.

Photograph B-1. This recently constructed rain garden provides bioretention of pollutants, as well as an attractive amenity for a residential building. Treatment should improve as vegetation matures.

The design of a rain garden may provide detention for events exceeding that of the WQCV. There are generally two ways to achieve this. The design can provide the flood control volume above the WQCV or the design can provide and slowly release the flood control volume in an area downstream of one or more rain gardens. See the *Storage* chapter in Volume 2 of the USDCM for more information.

This infiltrating BMP requires consultation with a geotechnical engineer when proposed adjacent to a structure. A geotechnical engineer can assist with evaluating the suitability of soils, identifying potential impacts, and establishing minimum distances between the BMP and structures.

Bioretention (Rain Garden)	
Functions	
LID/Volume Red.	Yes
WQCV Capture	Yes
WQCV+Flood Control	Yes
Fact Sheet Includes EURV Guidance	No
Typical Effectiveness for Targeted Pollutants[3]	
Sediment/Solids	Very Good[1]
Nutrients	Moderate
Total Metals	Good
Bacteria	Moderate
Other Considerations	
Life-cycle Costs[4]	Moderate

[1] Not recommended for watersheds with high sediment yields (unless pretreatment is provided).

[3] Based primarily on data from the International Stormwater BMP Database (www.bmpdatabase.org).

[4] Based primarily on BMP-REALCOST available at www.udfcd.org. Analysis based on a single installation (not based on the maximum recommended watershed tributary to each BMP).

Terminology

The term *bioretention* refers to the treatment process although it is also frequently used to describe a BMP that provides biological uptake and retention of the pollutants found in stormwater runoff. This BMP is sometimes referred to as a *porous landscape detention (PLD) area* or *rain garden*.

Site Selection

This BMP allows WQCV treatment within one or more areas designated for landscape (see design step 7 for suggusted vegetation). In this way, it is an excellent alternative to extended detention basins for small sites. A typical rain garden serves a tributary area of one impervious acre or less, although they can be designed for larger tributary areas. Multiple installations can be used within larger sites. Rain gardens should not be used when a baseflow is anticipated. They are typically small and installed in locations such as:

- Parking lot islands
- Street medians
- Landscape areas between the road and a detached walk
- Planter boxes that collect roof drains

Bioretention requires a stable watershed. Retrofit applications are typically successful for this reason. When the watershed includes phased construction, sparsely vegetated areas, or steep slopes in sandy soils, consider another BMP or provide pretreatment before runoff from these areas reaches the rain garden.

The surface of the rain garden should be flat. For this reason, rain gardens can be more difficult to incorporate into steeply sloping terrain; however, terraced applications of these facilities have been successful in other parts of the country.

Benefits

- Bioretention uses multiple treatment processes to remove pollutants, including sedimentation, filtering, adsorption, evapotranspiration, and biological uptake of constituents.
- Stormwater treatment occurs within attractive landscaped areas.
- There is a potential reduction of irrigation requirements by taking advantage of site runoff.

Limitations

- Additional design and construction steps are required for placement of any ponding or infiltration area near or upgradient from a building foundation and/or when expansive (low to high swell) soils exist. This is discussed in the design procedure section.
- In developing or otherwise erosive watersheds, high sediment loads can clog the facility.

When bioretention (and other BMPs used for infiltration) are located adjacent to buildings or pavement areas, protective measures should be implemented to avoid adverse impacts to these structures. Oversaturated subgrade soil underlying a structure can cause the structure to settle or result in moisture-related problems. Wetting of expansive soils or bedrock can cause swelling, resulting in structural movements. A geotechnical engineer should evaluate the potential impact of the BMP on adjacent structures based on an evaluation of the subgrade soil, groundwater, and bedrock conditions at the site. Additional minimum requirements include:

- In locations where subgrade soils do not allow infiltration and/or where infiltration could adversely impact adjacent structures, include a drainage layer (with underdrain) under the growing medium.
- In locations where potentially expansive soils or bedrock exist, placement of a rain garden adjacent to structures and pavement should only be considered if the BMP includes a drainage layer (with underdrain) and an impermeable geomembrane liner designed to restrict seepage.

Designing for Maintenance

Recommended maintenance practices for all BMPs are in Chapter 6 of this manual. During design, consider the following to ensure ease of maintenance over the long-term:

- Do not put a filter sock on the underdrain. This is not necessary and can cause the underdrain to clog.
- The best surface cover for a rain garden is full vegetation. Use rock mulch sparingly within the rain garden because rock mulch limits infiltration and is more difficult to maintain. Wood mulch handles sediment build-up better than rock mulch; however, wood mulch floats and may clog the overflow depending on the configuration of the outlet or settle unevenly. Some municipalities may not allow wood mulch for this reason.

Is Pretreatment Needed?

Designing the inflow gutter to the rain garden at a minimal slope of 0.5% can facilitate sediment and debris deposition prior to flows entering the BMP. Be aware, this will reduce maintenance of the BMP, but may require more frequent sweeping of the gutter to ensure that the sediment does not impede flow into the rain garden.

- Consider all potential maintenance requirements such as mowing (if applicable) and replacement of the growing medium. Consider the method and equipment for each task required. For example, in a large rain garden where the use of hand tools is not feasible, does the shape and configuration of the rain garden allow for removal of the growing medium using a backhoe?
- Provide pre-treatment when it will reduce the extent and frequency of maintenance necessary to maintain function over the life of the BMP. For example, if the tributary is larger than one acre, prone to debris or the use of sand for ice control, consider a small forebay.
- Make the rain garden as shallow as possible. Increasing the depth unnecessarily can create erosive side slopes and complicate maintenance. Shallow rain gardens are also more attractive.
- Design and adjust the irrigation system (temporary or permanent) to provide appropriate water for the establishment and maintenance of selected vegetation.

Design Procedure and Criteria

1. **Subsurface Exploration and Determination of a No-Infiltration, Partial Infiltration, or Full Infiltration Section**: Infiltration BMPs can have three basic types of sections. The appropriate section will depend on land use and activities, proximity to adjacent structures and soil characteristics. Sections of each installation type are shown in Figure B-1.
   - **No-Infiltration Section**: This section includes an underdrain and an impermeable liner that prevents infiltration of stormwater into the subgrade soils. Consider using this section when any of the following conditions exist:
     - The site is a stormwater hotspot and infiltration could result in contamination of groundwater.
     - The site is located over contaminated soils and infiltration could mobilize these contaminants.
     - The facility is located over potentially expansive soils or bedrock that could swell due to infiltration and potentially damage adjacent structures (e.g., building foundation or pavement).
   - **Partial Infiltration Section**: This section does not include an impermeable liner, and allows some infiltration. Stormwater that does not infiltrate is collected and removed by an underdrain

system.

- **Full Infiltration Section**: This section is designed to infiltrate the water stored in the basin into the subgrade below. UDFCD recommends a minimum infiltration rate of 2 times the rate needed to drain the WQCV over 12 hours. A conservative design could utilize the partial infiltration section with the addition of a valve at the underdrain outlet. In the event that infiltration does not remain adequate following construction, the valve could be opened and allow this section to operate as a partial infiltration section.

A geotechnical engineer should scope and perform a subsurface study. Typical geotechnical investigation needed to select and design the section includes:

- Prior to exploration review geologic and geotechnical information to assess near-surface soil, bedrock and groundwater conditions that may be encountered and anticipated ranges of infiltration rate for those materials. For example, if the facility is located adjacent to a structure and the site is located in a general area of known shallow, potentially expansive bedrock, a no-infiltration section will likely be required. It is also possible that this BMP may be infeasible, even with a liner, if there is a significant potential for damage to the adjacent structures (e.g., areas of dipping bedrock).
- Drill exploratory borings or exploratory pits to characterize subsurface conditions beneath the subgrade and develop requirements for subgrade preparation. Drill at least one boring or pit for every 40,000 ft^2, and at least two borings or pits for sites between 10,000 ft^2 and 40,000 ft^2. The boring or pit should extend at least 5 feet below the bottom of the base, and at least 20 feet in areas where there is a potential of encountering potentially expansive soils or bedrock. More borings or pits at various depths may be required by the geotechnical engineer in areas where soil types may change, in low-lying areas where subsurface drainage may collect, or where the water table is likely within 8 feet below the planned bottom of the base or top of subgrade. Installation of temporary monitoring wells in selected borings or pits for monitoring groundwater levels over time should be considered where shallow groundwater is encountered.
- Perform laboratory tests on samples obtained from the borings or pits to initially characterize the subgrade, evaluate the possible section type, and to assess subgrade conditions for supporting traffic loads. Consider the following tests: moisture content (ASTM D 2216); dry density (ASTM D 2936); Atterberg limits (ASTM D 4318); gradation (ASTM D 6913); swell-consolidation (ASTM D 4546); subgrade support testing (R-value, CBR or unconfined compressive strength); and hydraulic conductivity. A geotechnical engineer should determine the appropriate test method based on the soil type.
- For sites where a full infiltration section may be feasible, perform on-site infiltration tests using a double-ring infiltrometer (ASTM D 3385). Perform at least one test for every 160,000 ft^2 and at least two tests for sites between 40,000 ft^2 and 160,000 ft^2. The tests should be located near completed borings or pits so the test results and subsurface conditions encountered in the borings can be compared, and at least one test should be located near the boring or pit showing the most unfavorable infiltration condition. The test should be performed at the planned top of subgrade underlying the growing media.
- Be aware that actual infiltration rates are highly variable dependent on soil type, density and moisture content and degree of compaction as well as other environmental and construction influences. Actual rates can differ an order of magnitude or more from those indicated by infiltration or permeability testing. Select the type of section based on careful assessment of the subsurface exploration and testing data.

The following steps outline the design procedure and criteria, with Figure B-1 providing a corresponding cross-section.

2. **Basin Storage Volume**: Provide a storage volume based on a 12-hour drain time.

   Find the required WQCV (watershed inches of runoff). Using the imperviousness of the tributary area (or effective imperviousness where LID elements are used upstream), use Figure 3-2 located in Chapter 3 of this manual to determine the WQCV based on a 12-hour drain time.

   Calculate the design volume as follows:

$$V = \left[\frac{\text{WQCV}}{12}\right] A \qquad \text{Equation B-1}$$

   Where:

   V= design volume (ft^3)

   A = area of watershed tributary to the rain garden (ft^2)

3. **Basin Geometry:** UDFCD recommends a maximum WQCV ponding depth of 12 inches to maintain vegetation properly. Provide an inlet or other means of overflow at this elevation. Depending on the type of vegetation planted, a greater depth may be utilized to detain larger (more infrequent) events. The bottom surface of the rain garden, also referred to here as the filter area, should be flat. Sediment will reside on the filter area of the rain garden; therefore, if the filter area is too small, it may clog prematurely. If the filter area is not flat, the lowest area of the filter is more likely to clog as it will have a higher sediment loading. Increasing the filter area will reduce clogging and decrease the frequency of maintenance. Equation B-2 provides a minimum filter area allowing for some of the volume to be stored beyond the area of the filter (i.e., above the sideslopes of the rain garden).

Note that the total surcharge volume provided by the design must also equal or exceed the design volume. Where needed to meet the the required volume, also consider the porosity of the media at 14 percent. Use vertical walls or slope the sides of the basin to achieve the required volume. Sideslopes should be no steeper than 4:1 (horizontal:vertical).

$$A_F = 0.02AI \qquad \text{Equation B-2}$$

Where:

A_F= minimum (flat) filter area (ft^2)

A = area tributary to the rain garden (ft^2)

I = imperviousness of area tributary to the rain garden (percent expressed as a decimal)

4. **Growing Medium:** Provide a minimum of 18 inches of growing medium to enable establishment of the roots of the vegetation (see Figure B-1). A previous version of this manual specified a mixture consisting of 85% coarse sand and a 15% compost/shredded paper mixture (by volume). Based on field monitoring of this medium, compost was removed to reduce export of nutrients and fines and silts were added to both benefit the vegetation and increase capture of metals in stormwater.

Table B-1 specifies the growing media as well as other materials discussed in this Fact Sheet. Growing media is engineered media that requires a high level of quality control and must almost always be imported. Obtaining a particle size distribution and nutrient analysis is the only way to ensure that the media is acceptable. UDFCD has identified placement of media not meeting the specification as the most frequent cause of failure. Sample the media after delivery and prior to placement or obtain a sample from the supplier in advance of delivery and placement and have this analyzed prior to delivery.

Other Rain Garden Growing Medium Amendments

The specified growing medium was designed for filtration ability, clogging characteristics, and vegetative health. It is important to preserve the function provided by the rain garden growing medium when considering additional materials for incorporation into the growing medium or into the standard section shown in Figure B-1. When desired, amendments may be included to improve water quality or to benefit vegetative health as long as they do not add nutrients, pollutants, or modify the infiltration rate. For example, a number of products, including steel wool, capture and retain dissolved phosphorus (Erickson 2009). When phosphorus is a target pollutant, proprietary materials with similar characteristics may be considered. Do not include amendments such as top soil, sandy loam, and compost.

Table B-1. Material specification for bioretention/rain garden facilities

Material		Specification			Submittals	Testing	Notes
Bioretention Growing Media (soil + organics)	Bioretention soil	Particle size distribution: 80-90% sand (0.05 - 2.0 mm diameter) 3-17% silt (0.002-0.5 mm diameter) 3-17% clay (<0.002 diameter) Chemical attribute and nutrient analysis: pH 6.8 - 7.5 organic matter < 1.5% nitrogen <15 ppm phosphorus < 15 ppm salinity < 6 mmhos/cm			Particle size distribution and nutrient analysis required.		Percentages are in weight.
	Bioretention organics	3 to 5% shredded mulch (by weight of growing media)					bioretention soil required. Aged 6 months (minimum).
Landscape mulch		Shredded hardwood					Aged 6 months (minimum). No weed fabric allowed.
Underdrain aggregate	CDOT filter material (Class B or C as specified)		Mass Percent Passing Square Mesh Sieve		Particle size distribution required.		
		Sieve Size	Class B	Class C			
		37.5 mm (1.5")	100				
		19.0 mm (0.75")		100			
		4.75 mm (No.4)	20-60	60-100			
		1.18 um (No. 16)	10-30				
		300 um (No. 50)	0-10	10-30			
		150 um (No. 100)		0-10			
		75 um (No. 200)	0-3	0-3			
Underdrain Pipe		Pipe diameter and type	Maximum slot width (inches)	Minimum open area (per foot)	Required	Pipe must conform to requirements of ASTM designation F949. There shall be no evidence of splitting, cracking, or breaking when the pipe is tested per ASTM test method D2412 in accordance with F949 section 7.5 and ASTM F794 section 9.5.	Contech A-2000 slotted pipe (or equal)
		4-inch slotted PVC	0.032	1.90 in.^{2}			
		6-inch slotted PVC	0.032	1.98 in.^{2}			
Impermeable liner			Thickness 0.76 mm (30 mil)	Test method	Required	Thermal welding required for fully lined facilities (not a cutain). Leak testing in the field required.	
		Thickness, % Tolerance	+/-5	ASTM D 1593			
		Tensile strength, kN/m (lb/in)	12.25 (70)	ASTM D8 82, method B			
		Modulus at 100% elongation, kN/m	5.25 (30)	ASTM D8 82, method B			
		Ultimate elongation, %	350	ASTM D8 82, method A			
		Tear resistance, N(lbs)	38 (8.5)	ASTM D 1004			
		Low temperature impact, ° C (° F)	-29 (-20)	ASTM D 1790			
		Volatile loss, % maximum	0.7	ASTM D8 82, method A			
		Pinholes, no. per 9 m^2 (no. per 10 yd.^{2})	1 (max)	N/A			
		Bonded seam strength, % of tensile	80	N/A			

5. **Underdrain System**: When using an underdrain system, provide a control orifice sized to drain the design volume in 12 hours or more (see Equation B-3). Use a minimum orifice size of 3/8 inch to avoid clogging. This will provide detention and slow release of the WQCV, providing water quality benefits and reducing impacts to downstream channels. Space underdrain pipes a maximum of 20 feet on center. Provide cleanouts to enable maintenance of the underdrain. Cleanouts can also be used to conduct an inspection (by camera) of the underdrain system to ensure that the pipe was not crushed or disconnected during construction.

Calculate the diameter of the orifice for a 12-hour drain time using Equation B-3 (Use a minimum orifice size of 3/8 inch to avoid clogging.):

$$D_{12\text{ hour drain time}} = \sqrt{\frac{V}{1414\, y^{0.41}}} \qquad \text{Equation B-3}$$

Where:

D = orifice diameter (in)

y = distance from the lowest elevation of the storage volume (i.e., surface of the filter) to the center of the orifice (ft)

V = volume (WQCV or the portion of the WQCV in the rain garden) to drain in 12 hours (ft^3)

In previous versions of this manual, UDFCD recommended that the underdrain be placed in an aggregate layer and that a geotextile (separator fabric) be placed between this aggregate and the growing medium. This version of the manual replaces that section with materials that, when used together, eliminate the need for a separator fabric.

The underdrain system should be placed within an 6-inch-thick section of CDOT Class B or Class C filter material meeting the gradation in Table B-1. Use slotted pipe that meets the slot dimensions provided in Table B-3.

6. **Impermeable Geomembrane Liner and Geotextile Separator Fabric:** For no-infiltration sections, install a 30 mil (minimum) PVC geomembrane liner, per Table B-1, on the bottom and sides of the basin, extending up at least to the top of the underdrain layer. Provide at least 9 inches (12 inches if possible) of cover over the membrane where it is attached to the wall to protect the membrane from UV deterioration. The geomembrane should be field-seamed using a dual track welder, which allows for non-destructive testing of almost all field seams. A small amount of single track is allowed in limited areas to seam around pipe perforations, to patch seams removed for destructive seam testing, and for limited repairs. The liner should be installed with slack to prevent tearing due to backfill, compaction, and settling. Place CDOT Class B geotextile separator fabric above the geomembrane to protect it from being punctured during the placement of the filter material above the liner. If the subgrade contains angular rocks or other material that could puncture the geomembrane, smooth-roll the surface to create a suitable surface. If smooth-rolling the surface does not provide a suitable surface, also place the separator fabric between the geomembrane and the underlying subgrade. This should only be done when necessary because fabric placed under the geomembrane can increase seepage losses through pinholes or other geomembrane defects. Connect the geomembrane to perimeter concrete walls around the basin perimeter, creating a watertight seal between the geomembrane and the walls using a continuous batten bar and anchor connection (see Figure B-3). Where the need for the impermeable membrane is not as critical, the membrane can be attached with a nitrile-based vinyl adhesive. Use watertight PVC boots for underdrain pipe penetrations through the liner (see Figure B-2) or the technique shown in photo B-3.

Photograph B-2. The impermeable membrane in this photo has ripped from the bolts due to placement of the media without enough slack in the membrane.

Photograph B-3. Ensure a water-tight connection where the underdrain penetrated the liner. The heat-welded "boot" shown here is an alternative to the clamped detail shown in Figure B-2.

Table B-2. Physical requirements for separator fabric[1]

Property	Class B		Test Method
	Elongation < 50%[2]	Elongation > 50%[2]	
Grab Strength, N (lbs.)	800 (180)	510 (115)	ASTM D 4632
Puncture Resistance, N (lbs.)	310 (70)	180 (40)	ASTM D 4833
Trapezoidal Tear Strength, N (lbs.)	310 (70)	180 (40)	ASTM D 4533
Apparent Opening Size, mm (US Sieve Size)	AOS < 0.3mm (US Sieve Size No. 50)		ASTM D 4751
Permittivity, sec^{-1}	0.02 default value, must also be greater than that of soil		ASTM D 4491
Permeability, cm/sec	k fabric > k soil for all classes		ASTM D 4491
Ultraviolet Degradation at 500 hours	50% strength retained for all classes		ASTM D 4355

[1] Strength values are in the weaker principle direction

[2] As measured in accordance with ASTM D 4632

7. **Inlet and Outlet Control:** In order to provide the proper drain time, the bioretention area can be restricted at the underdrain outlet with an orifice plate or can be designed without an underdrain (provided the subgrade meets the requirements above). Equation B-3 is a simplified equation for sizing an orifice plate for a 12-hour drain time. UD-BMP or UD-Detention, available at www.udfcd.org, also perform this calculation.

   How flow enters and exits the BMP is a function of the overall drainage concept for the site. Curb cuts can be designed to both allow stormwater into the rain garden as well as to provide release of stormwater in excess of the WQCV. Roadside rain gardens located on a steep site might pool and overflow into downstream cells with a single curb cut, level spreader, or outlet structure located at the most downstream cell. When selecting the

Photograph B-4. The curb cut shown allows flows to enter this rain garden while excess flows bypass the facility.

type and location of the outlet structure, ensure runoff will not short-circuit the rain garden. This is a frequent problem when using a curb inlet located outside the rain garden for overflow.

For rain gardens with concentrated points of inflow, provide a forebay and energy dissipation. A depressed concrete slab works best for a forebay. It helps maintain a vertical drop at the inlet and allows for easily removal of sediment using a square shovel. Where rock is used for energy dissipation, provide separator fabric between the rock and growing medium to minimize subsidence.

8. **Vegetation:** UDFCD recommends that the filter area be vegetated with drought tolerant species that thrive in sandy soils. Table B-3 provides a suggested seed mix for sites that will not need to be irrigated after the grass has been established.

   Mix seed well and broadcast, followed by hand raking to cover seed and then mulched. Hydromulching can be effective for large areas. Do not place seed when standing water or snow is present or if the ground is frozen. Weed control is critical in the first two to three years, especially when starting with seed.

   When using sod, specify sand–grown sod. Do not use conventional sod. Conventional sod is grown in clay soil that will seal the filter area, greatly reducing overall function of the BMP.

   When using an impermeable liner, select plants with diffuse (or fibrous) root systems, not taproots. Taproots can damage the liner and/or underdrain pipe. Avoid trees and large shrubs that may interfere with restorative maintenance. Plant these outside of the area of growing medium. Use a cutoff wall to ensure that roots do not grow into the underdrain or place trees and shrubs a conservative distance from the underdrain.

9. **Irrigation:** Provide spray irrigation at or above the WQCV elevation or place temporary irrigation on top of the rain garden surface. Do not place sprinkler heads on the flat surface. Remove temporary irrigation when vegetation is established. If left in place this will become buried over time and will be damaged during maintenance operations.

   Adjust irrigation schedules during the growing season to provide the minimum water necessary to maintain plant health and to maintain the available pore space for infiltration.

Designing for Flood Protection

Provide the WQCV in rain gardens that direct excess flow into to a landscaped basin designed for flood control or design a single basin to provide water quality and flood control. See the *Storage* chapter in Volume 2 of the USDCM for more information. UD-Detention, available at www.udfcd.org, will facilitate design either alternative.

Table B-3. Native seed mix for rain gardens

Common Name	Scientific Name	Variety	PLS[2] lbs per Acre	Ounces per Acre
Sand bluestem	Andropogon hallii	Garden	3.5	
Sideoats grama	Bouteloua curtipendula	Butte	3	
Prairie sandreed	Calamovilfa longifolia	Goshen	3	
Indian ricegrass	Oryzopsis hymenoides	Paloma	3	
Switchgrass	Panicum virgatum	Blackwell	4	
Western wheatgrass	Pascopyrum smithii	Ariba	3	
Little bluestem	Schizachyrium scoparium	Patura	3	
Alkali sacaton	Sporobolus airoides		3	
Sand dropseed	Sporobolus cryptandrus		3	
Pasture sage[1]	Artemisia frigida			2
Blue aster[1]	Aster laevis			4
Blanket flower[1]	Gaillardia aristata			8
Prairie coneflower[1]	Ratibida columnifera			4
Purple prairieclover[1]	Dalea (Petalostemum) purpurea			4
Sub-Totals:			27.5	22
Total lbs per acre:			**28.9**	

[1] Wildflower seed (optional) for a more diverse and natural look.
[2] PLS = Pure Live Seed.

Aesthetic Design

In addition to effective stormwater quality treatment, rain gardens can be attractively incorporated into a site within one or several landscape areas. Aesthetically designed rain gardens will typically either reflect the character of their surroundings or become distinct features within their surroundings. Guidelines for each approach are provided below.

Reflecting the Surrounding

- Determine design characteristics of the surrounding. This becomes the context for the drainage improvement. Use these characteristics in the structure.
- Create a shape or shapes that "fix" the forms surrounding the improvement. Make the improvement part of the existing surrounding.
- The use of material is essential in making any new improvement an integral part of the whole. Select materials that are as similar as possible to the surrounding architectural/engineering materials. Select materials from the same source if possible. Apply materials in the same quantity, manner, and method as original material.
- Size is an important feature in seamlessly blending the addition into its context. If possible, the overall size of the improvement should look very similar to the overall sizes of other similar objects in the improvement area.
- The use of the word texture in terms of the structure applies predominantly to the selection of plant material. The materials used should as closely as possible, blend with the size and texture of other plant material used in the surrounding. The plants may or may not be the same, but should create a similar feel, either individually or as a mass.

Reflective Design

A reflective design borrows the characteristics, shapes, colors, materials, sizes and textures of the built surroundings. The result is a design that fits seamlessly and unobtrusively in its environment.

Creating a Distinct Feature

Designing the rain garden as a distinct feature is limited only by budget, functionality, and client preference. There is far more latitude in designing a rain garden that serves as a distinct feature. If this is the intent, the main consideration beyond functionality is that the improvement create an attractive addition to its surroundings. The use of form, materials, color, and so forth focuses on the improvement itself and does not necessarily reflect the surroundings, depending on the choice of the client or designer.

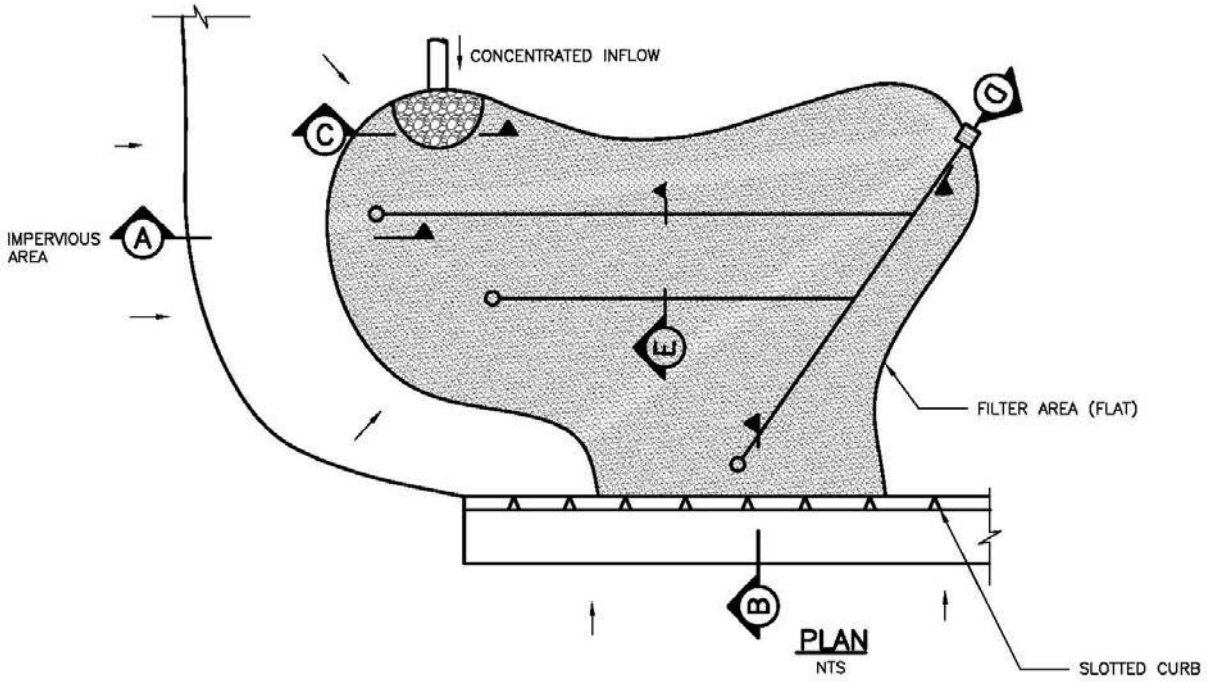

Figure B-1 – Typical rain garden plan and sections

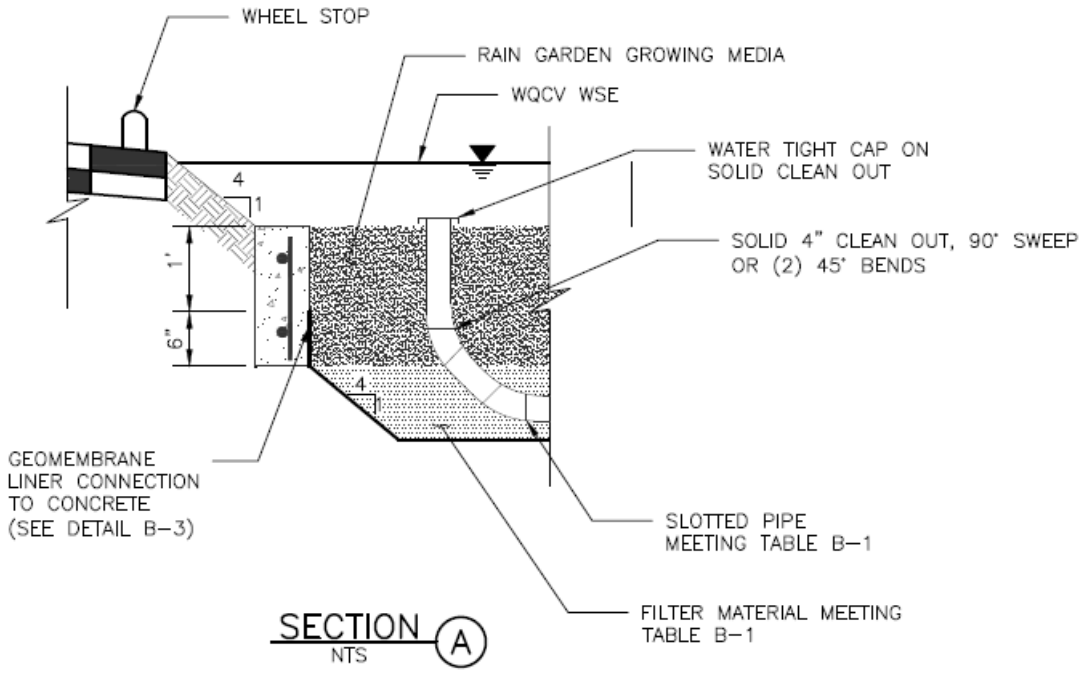

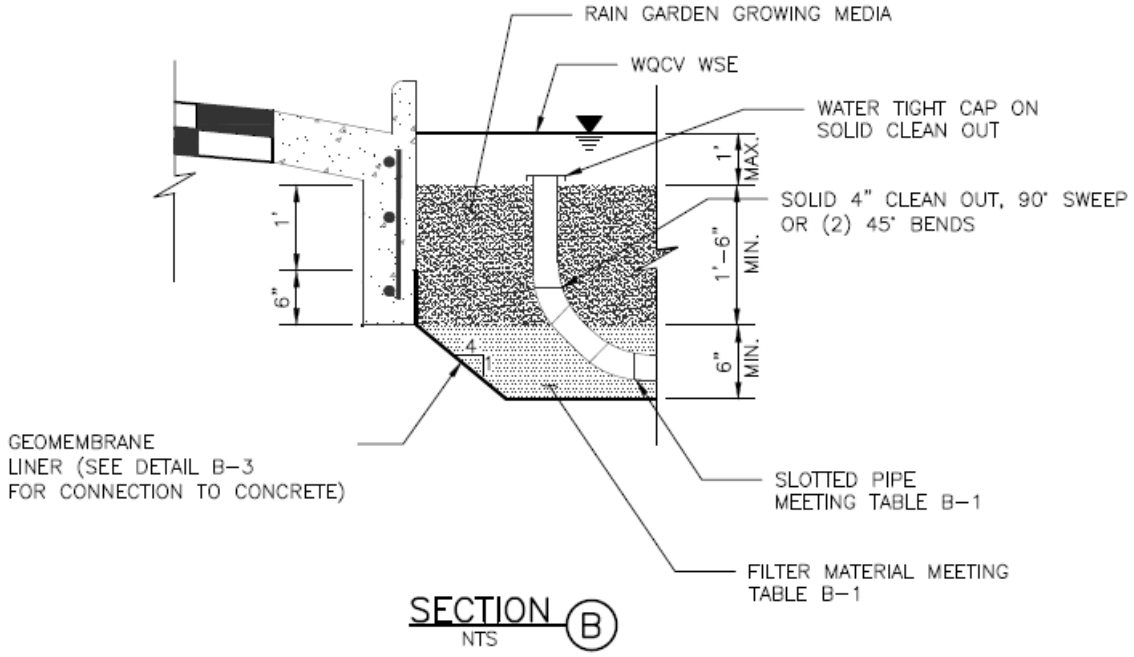

NO-INFILTRATION SECTIONS

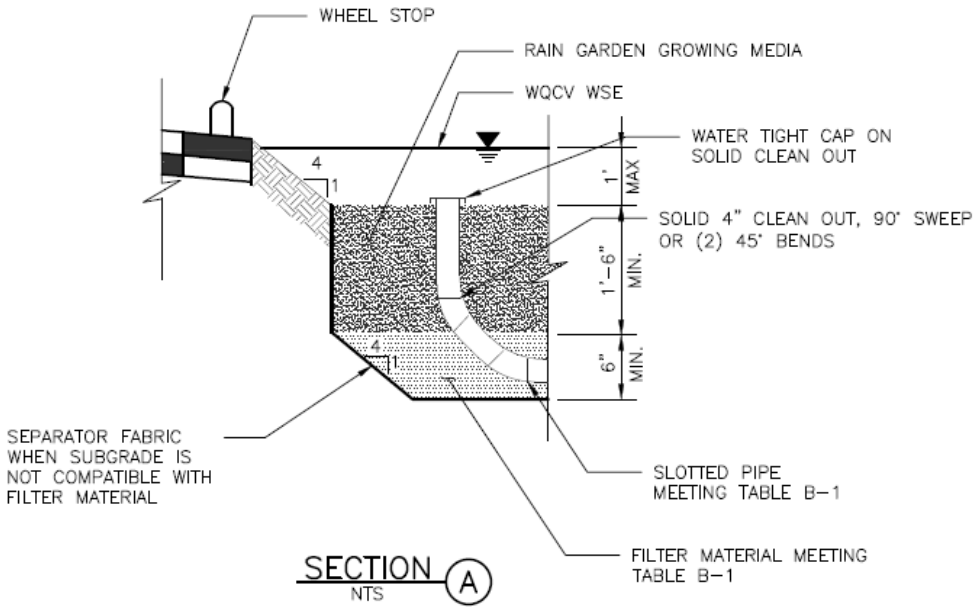

SECTION A
NTS

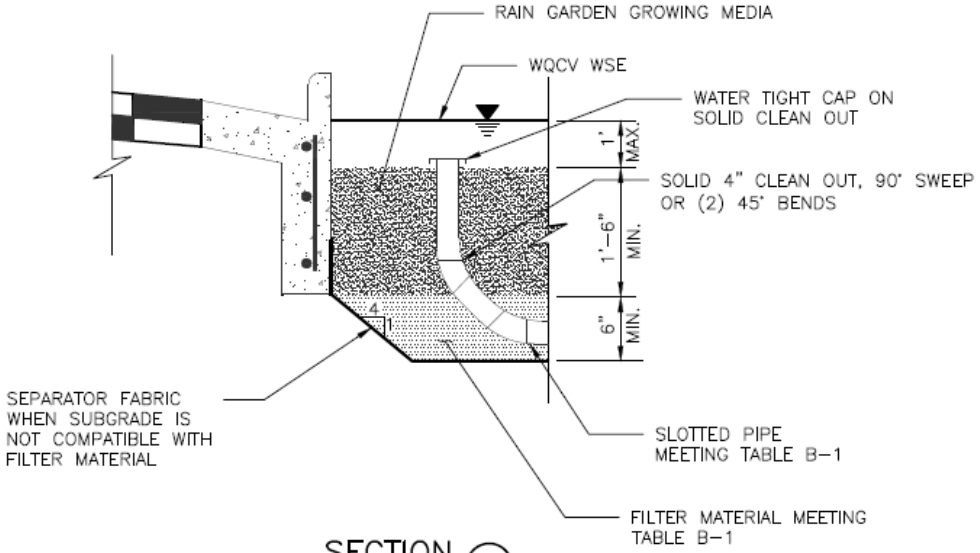

SECTION B
NTS

PARTIAL INFILTRATION SECTIONS

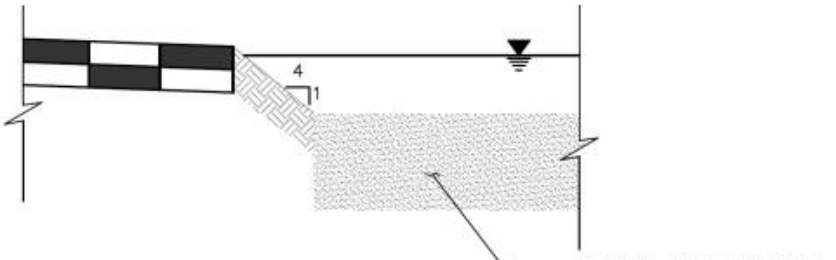

SECTION A
NTS

FULL INFILTRATION SECTION

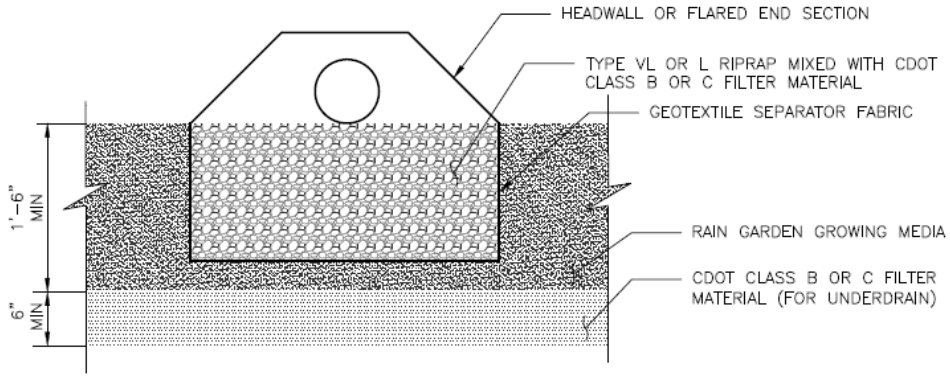

SECTION C
NTS

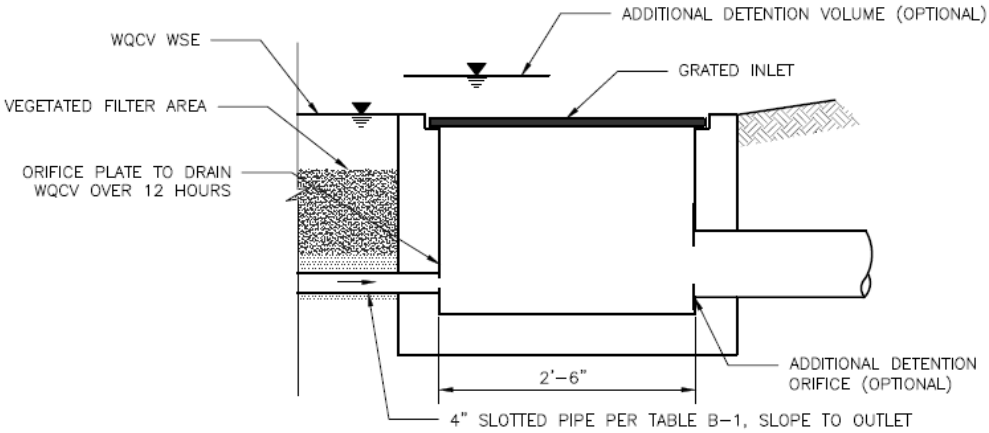

SECTION D
NTS

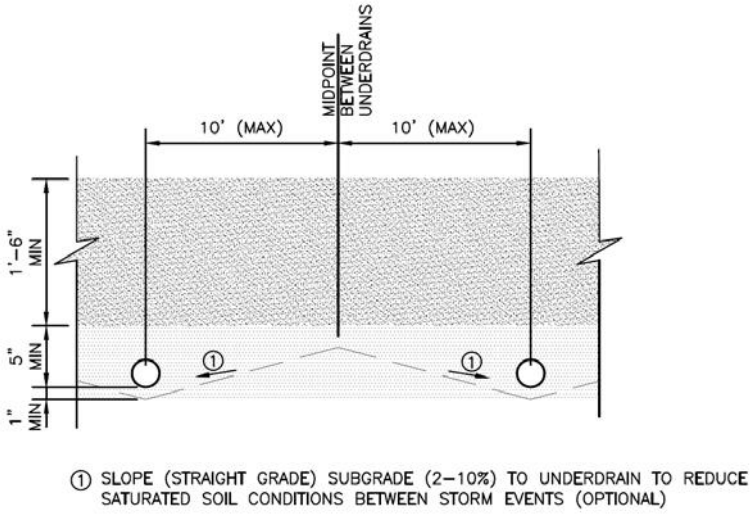

SECTION E
NTS

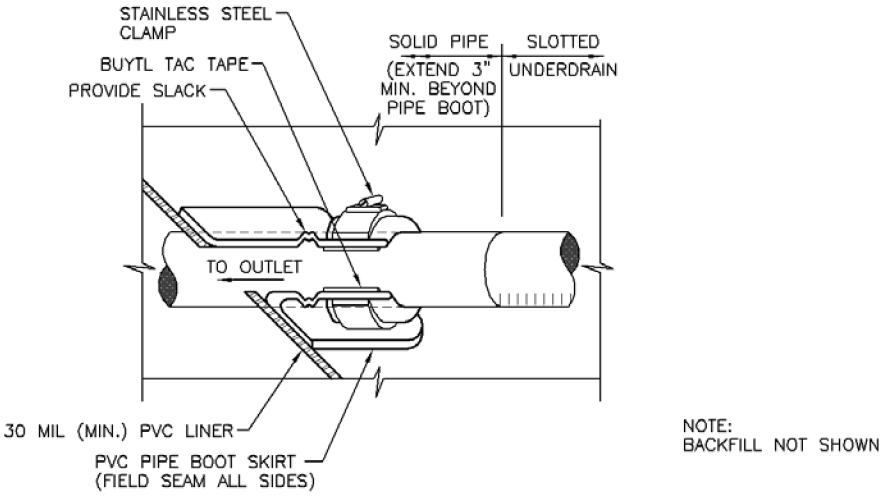

Figure B-2. Geomembrane Liner/Underdrain Penetration Detail

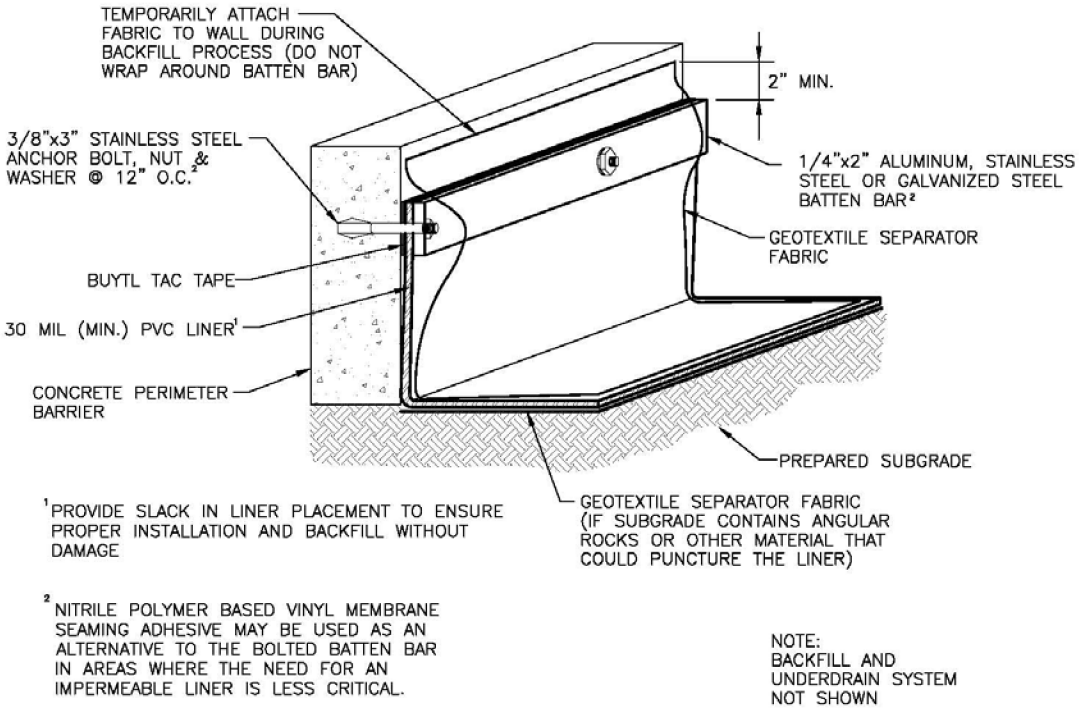

Figure B-3. Geomembrane Liner/Concrete Connection Detail

Construction Considerations

Proper construction of rain gardens involves careful attention to material specifications, final grades, and construction details. For a successful project, implement the following practices:

- Protect area from excessive sediment loading during construction. This is the most common cause of clogging of rain gardens. The portion of the site draining to the rain garden must be stabilized before allowing flow into the rain garden. This includes completion of paving operations.

- Avoid over compaction of the area to preserve infiltration rates (for partial and full infiltration sections).

- Provide construction observation to ensure compliance with design specifications. Improper installation, particularly related to facility dimensions and elevations and underdrain elevations, is a common problem with rain gardens.

Photograph B-3. Inadequate construction staking may have contributed to flows bypassing this rain garden.

- When using an impermeable liner, ensure enough slack in the liner to allow for backfill, compaction, and settling without tearing the liner.

- Provide necessary quality assurance and quality control (QA/QC) when constructing an impermeable geomembrane liner system, including but not limited to fabrication testing, destructive and non-destructive testing of field seams, observation of geomembrane material for tears or other defects, and air lace testing for leaks in all field seams and penetrations. QA/QC should be overseen by a professional engineer. Consider requiring field reports or other documentation from the engineer.

Photograph B-4. Runoff passed the upradient rain garden, shown in Photo B-3, and flooded this downstream rain garden.

- Provide adequate construction staking to ensure that the site properly drains into the facility, particularly with respect to surface drainage away from adjacent buildings. Photo B-3 and Photo B-4 illustrate a construction error for an otherwise correctly designed series of rain gardens.

References

Erickson, Andy. 2009. Field Applications of Enhanced Sand Filtration. University of Minnesota *Stormwater Management Practice Assessment Project Update*. http://wrc.umn.edu.

Hunt, William F., Davis, Allen P., Traver, Robert. G. 2012. "Meeting Hydrologic and Water Quality Goals through Targeted Bioretention Design" *Journal of Environmental Engineering*. (2012) 138:698-707. Print.

HYDRAULIC CALCULATIONS

LOT 13 CLAREMONT BUSINESS PARK FIL. NO. 2
FINAL DRAINAGE REPORT DRAINAGE CALCULATIONS
(Area Runoff Coefficient Summary)

			DEVELOPED			*UNDEVELOPED*			*WEIGHTED*	
BASIN	**TOTAL AREA (Sq Ft)**	**TOTAL AREA *(Acres)***	**AREA *(Acres)***	**C_5**	**C_{100}**	**AREA *(Acres)***	**C_5**	**C_{100}**	**C_5**	**C_{100}**
A	*11560*	0.27	0.25	0.90	0.95	0.02	0.25	0.35	***0.87***	***0.92***
B	*1901*	0.04	0.00	0.90	0.95	0.04	0.25	0.35	***0.23***	***0.32***
C	*2000*	0.05	0.03	0.90	0.95	0.02	0.25	0.35	***0.70***	***0.77***

LOT 13 CLAREMONT BUSINESS PARK FIL. NO. 2
FINAL DRAINAGE REPORT DRAINAGE CALCULATIONS
(Area Drainage Summary)

From Area Runoff Coefficient Summary				*OVERLAND*				*STREET / CHANNEL FLOW*				*Time of Travel*		*INTENSITY **		*TOTAL FLOWS*	
BASIN	**AREA TOTAL** *(Acres)*	C_5	C_{100}	C_5	**Length** *(ft)*	**Height** *(ft)*	T_C *(min)*	**Length** *(ft)*	**Slope** *(%)*	**Velocity** *(fps)*	T_t *(min)*	**TOTAL** *(min)*	**CHECK** *(min)*	I_5 *(in/hr)*	I_{100} *(in/hr)*	Q_5 *(c.f.s.)*	Q_{100} *(c.f.s.)*
Proposed Area Drainage Summary																	
A	0.27	0.90	0.95	0.90	10	1	0.5	126	1.6%	4.4	0.5	5.0	10.8	5.2	8.7	***1.3***	***2.2***
B	0.04	0.25	0.35	0.25	52	1	8.9	0	0.0%	0.0	0.0	8.9	10.3	4.3	7.2	***0.0***	***0.1***
C	0.05	0.90	0.95	0.90	50	2	1.6	95	1.8%	4.7	0.3	5.0	10.8	5.2	8.7	***0.2***	***0.4***

Calculated by: GW
Date: 11/5/2018
Checked by: VAS

Design Procedure Form: Rain Garden (RG)

UD-BMP (Version 3.07, March 2018)

Designer: M&S Civil Consultants
Company:
Date: November 11, 2018
Project: Lot 13 Claremont Business Park
Location:

1. Basin Storage Volume	
A) Effective Imperviousness of Tributary Area, I_a (100% if all paved and roofed areas upstream of rain garden)	I_a = 95.0 %
B) Tributary Area's Imperviousness Ratio ($i = I_a/100$)	i = 0.950
C) Water Quality Capture Volume (WQCV) for a 12-hour Drain Time ($WQCV = 0.8 * (0.91 * i^3 - 1.19 * i^2 + 0.78 * i)$)	WQCV = 0.36 watershed inches
D) Contributing Watershed Area (including rain garden area)	Area = 11,560 sq ft
E) Water Quality Capture Volume (WQCV) Design Volume Vol = (WQCV / 12) * Area	V_{WQCV} = 345 cu ft
F) For Watersheds Outside of the Denver Region, Depth of Average Runoff Producing Storm	d_6 = in
G) For Watersheds Outside of the Denver Region, Water Quality Capture Volume (WQCV) Design Volume	$V_{WQCV\ OTHER}$ = cu ft
H) User Input of Water Quality Capture Volume (WQCV) Design Volume (Only if a different WQCV Design Volume is desired)	$V_{WQCV\ USER}$ = cu ft
2. Basin Geometry	
A) WQCV Depth (12-inch maximum)	D_{WQCV} = 9 in
B) Rain Garden Side Slopes (Z = 4 min., horiz. dist per unit vertical) (Use "0" if rain garden has vertical walls)	Z = 4.00 ft / ft
C) Mimimum Flat Surface Area	A_{Min} = 220 sq ft
D) Actual Flat Surface Area	A_{Actual} = 225 sq ft
E) Area at Design Depth (Top Surface Area)	A_{Top} = 756 sq ft
F) Rain Garden Total Volume ($V_T = ((A_{Top} + A_{Actual}) / 2) * Depth$)	V_T = 368 cu ft
3. Growing Media	Choose One: (●) 18" Rain Garden Growing Media; ( ) Other (Explain):
4. Underdrain System	
A) Are underdrains provided?	Choose One: (●) YES; ( ) NO
B) Underdrain system orifice diameter for 12 hour drain time	
i) Distance From Lowest Elevation of the Storage Volume to the Center of the Orifice	y = 0.3 ft
ii) Volume to Drain in 12 Hours	Vol_{12} = 345 cu ft
iii) Orifice Diameter, 3/8" Minimum	D_O = 5/8 in

Design Procedure Form: Rain Garden (RG)

Designer: M&S Civil Consultants
Company:
Date: November 11, 2018
Project: Lot 13 Claremont Business Park
Location:

5. Impermeable Geomembrane Liner and Geotextile Separator Fabric A) Is an impermeable liner provided due to proximity of structures or groundwater contamination?	Choose One (●) YES ( ) NO PROVIDE A 30 MIL (MIN) PVC LINER WITH CDOT CLASS B GEOTEXTILE ABOVE IT. USE THE SAME GEOTEXTILE BELOW THE LINER IF THE SUBGRADE IS ANGULAR
6. Inlet / Outlet Control A) Inlet Control	Choose One ( ) Sheet Flow- No Energy Dissipation Required (●) Concentrated Flow- Energy Dissipation Provided
7. Vegetation	Choose One ( ) Seed (Plan for frequent weed control) (●) Plantings ( ) Sand Grown or Other High Infiltration Sod
8. Irrigation A) Will the rain garden be irrigated?	Choose One ( ) YES (●) NO

Notes:

Detention Basin Outlet Structure Design

UD-Detention, Version 3.07 (February 2017)

Project: CBP - Lot 13

Basin ID:

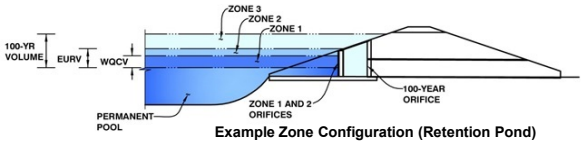

Example Zone Configuration (Retention Pond)

	Stage (ft)	Zone Volume (ac-ft)	Outlet Type
Zone 1 (WQCV)	0.75	0.008	Filtration Media
Zone 2			Not Utilized
Zone 3			Not Utilized
		0.008	Total

User Input: Orifice at Underdrain Outlet (typically used to drain WQCV in a Filtration BMP)

Underdrain Orifice Invert Depth =	1.50	ft (distance below the filtration media surface)
Underdrain Orifice Diameter =	0.46	inches

Calculated Parameters for Underdrain

Underdrain Orifice Area =	0.0	ft^2
Underdrain Orifice Centroid =	0.02	feet

User Input: Orifice Plate with one or more orifices or Elliptical Slot Weir (typically used to drain WQCV and/or EURV in a sedimentation BMP)

Invert of Lowest Orifice =	N/A	ft (relative to basin bottom at Stage = 0 ft)
Depth at top of Zone using Orifice Plate =	N/A	ft (relative to basin bottom at Stage = 0 ft)
Orifice Plate: Orifice Vertical Spacing =	N/A	inches
Orifice Plate: Orifice Area per Row =	N/A	inches

Calculated Parameters for Plate

WQ Orifice Area per Row =	N/A	ft^2
Elliptical Half-Width =	N/A	feet
Elliptical Slot Centroid =	N/A	feet
Elliptical Slot Area =	N/A	ft^2

User Input: Stage and Total Area of Each Orifice Row (numbered from lowest to highest)

	Row 1 (optional)	Row 2 (optional)	Row 3 (optional)	Row 4 (optional)	Row 5 (optional)	Row 6 (optional)	Row 7 (optional)	Row 8 (optional)
Stage of Orifice Centroid (ft)	N/A	N/A	N/A	N/A	N/A	N/A	N/A	N/A
Orifice Area (sq. inches)	N/A	N/A	N/A	N/A	N/A	N/A	N/A	N/A

	Row 9 (optional)	Row 10 (optional)	Row 11 (optional)	Row 12 (optional)	Row 13 (optional)	Row 14 (optional)	Row 15 (optional)	Row 16 (optional)
Stage of Orifice Centroid (ft)	N/A	N/A	N/A	N/A	N/A	N/A	N/A	N/A
Orifice Area (sq. inches)	N/A	N/A	N/A	N/A	N/A	N/A	N/A	N/A

User Input: Vertical Orifice (Circular or Rectangular)

	Not Selected	Not Selected	
Invert of Vertical Orifice =	N/A	N/A	ft (relative to basin bottom at Stage = 0 ft)
Depth at top of Zone using Vertical Orifice =	N/A	N/A	ft (relative to basin bottom at Stage = 0 ft)
Vertical Orifice Diameter =	N/A	N/A	inches

Calculated Parameters for Vertical Orifice

	Not Selected	Not Selected	
Vertical Orifice Area =	N/A	N/A	ft^2
Vertical Orifice Centroid =	N/A	N/A	feet

User Input: Overflow Weir (Dropbox) and Grate (Flat or Sloped)

	Not Selected	Not Selected	
Overflow Weir Front Edge Height, Ho =	0.75	N/A	ft (relative to basin bottom at Stage = 0 ft)
Overflow Weir Front Edge Length =	0.79	N/A	feet
Overflow Weir Slope =	0.00	N/A	H:V (enter zero for flat grate)
Horiz. Length of Weir Sides =	0.75	N/A	feet
Overflow Grate Open Area % =	70%	N/A	%, grate open area/total area
Debris Clogging % =	50%	N/A	%

Calculated Parameters for Overflow Weir

	Not Selected	Not Selected	
Height of Grate Upper Edge, H_t =	0.75	N/A	feet
Over Flow Weir Slope Length =	0.75	N/A	feet
Grate Open Area / 100-yr Orifice Area =	0.52	N/A	should be $\geq$ 4
Overflow Grate Open Area w/o Debris =	0.41	N/A	ft^2
Overflow Grate Open Area w/ Debris =	0.21	N/A	ft^2

User Input: Outlet Pipe w/ Flow Restriction Plate (Circular Orifice, Restrictor Plate, or Rectangular Orifice)

	Not Selected	Not Selected	
Depth to Invert of Outlet Pipe =	2.32	N/A	ft (distance below basin bottom at Stage = 0 ft)
Circular Orifice Diameter =	12.00	N/A	inches

Calculated Parameters for Outlet Pipe w/ Flow Restriction Plate

	Not Selected	Not Selected	
Outlet Orifice Area =	0.79	N/A	ft^2
Outlet Orifice Centroid =	0.50	N/A	feet
Half-Central Angle of Restrictor Plate on Pipe =	N/A	N/A	radians

User Input: Emergency Spillway (Rectangular or Trapezoidal)

Spillway Invert Stage=	1.30	ft (relative to basin bottom at Stage = 0 ft)
Spillway Crest Length =	6.00	feet
Spillway End Slopes =	0.00	H:V
Freeboard above Max Water Surface =	1.00	feet

Calculated Parameters for Spillway

Spillway Design Flow Depth=	0.15	feet
Stage at Top of Freeboard =	2.45	feet
Basin Area at Top of Freeboard =	0.02	acres

Routed Hydrograph Results

Design Storm Return Period =	WQCV	EURV	2 Year	5 Year	10 Year	25 Year	50 Year	100 Year	500 Year
One-Hour Rainfall Depth (in) =	0.53	1.07	1.19	1.50	1.75	2.00	2.25	2.52	0.00
Calculated Runoff Volume (acre-ft) =	0.008	0.035	0.025	0.032	0.038	0.044	0.050	0.057	0.000
OPTIONAL Override Runoff Volume (acre-ft) =									
Inflow Hydrograph Volume (acre-ft) =	0.007	0.034	0.024	0.032	0.037	0.044	0.049	0.056	#N/A
Predevelopment Unit Peak Flow, q (cfs/acre) =	0.00	0.00	0.00	0.01	0.01	0.03	0.24	0.57	0.00
Predevelopment Peak Q (cfs) =	0.0	0.0	0.0	0.0	0.0	0.0	0.1	0.2	0.0
Peak Inflow Q (cfs) =	0.2	0.7	0.5	0.6	0.7	0.9	1.0	1.1	#N/A
Peak Outflow Q (cfs) =	0.0	0.5	0.3	0.5	0.6	0.7	0.7	0.8	#N/A
Ratio Peak Outflow to Predevelopment Q =	N/A	N/A	N/A	288.4	148.3	75.8	11.3	5.1	#N/A
Structure Controlling Flow =	Filtration Media	Overflow Grate 1	Overflow Grate 1	Overflow Grate 1	Overflow Grate 1	Overflow Grate 1	Overflow Grate 1	Overflow Grate 1	#N/A
Max Velocity through Grate 1 (fps) =	N/A	1.21	0.75	1.1	1.3	1.5	1.7	1.9	#N/A
Max Velocity through Grate 2 (fps) =	N/A	N/A	N/A	N/A	N/A	N/A	N/A	N/A	#N/A
Time to Drain 97% of Inflow Volume (hours) =	12	14	14	14	13	13	13	13	#N/A
Time to Drain 99% of Inflow Volume (hours) =	**12**	15	15	15	15	15	15	14	#N/A
Maximum Ponding Depth (ft) =	0.63	0.96	0.89	0.94	0.98	1.05	1.11	1.19	#N/A
Area at Maximum Ponding Depth (acres) =	0.02	0.02	0.02	0.02	0.02	0.02	0.02	0.02	#N/A
Maximum Volume Stored (acre-ft) =	0.006	0.012	0.010	0.011	0.012	0.013	0.015	0.016	#N/A

Detention Basin Outlet Structure Design

UD-Detention, Version 3.07 (February 2017)

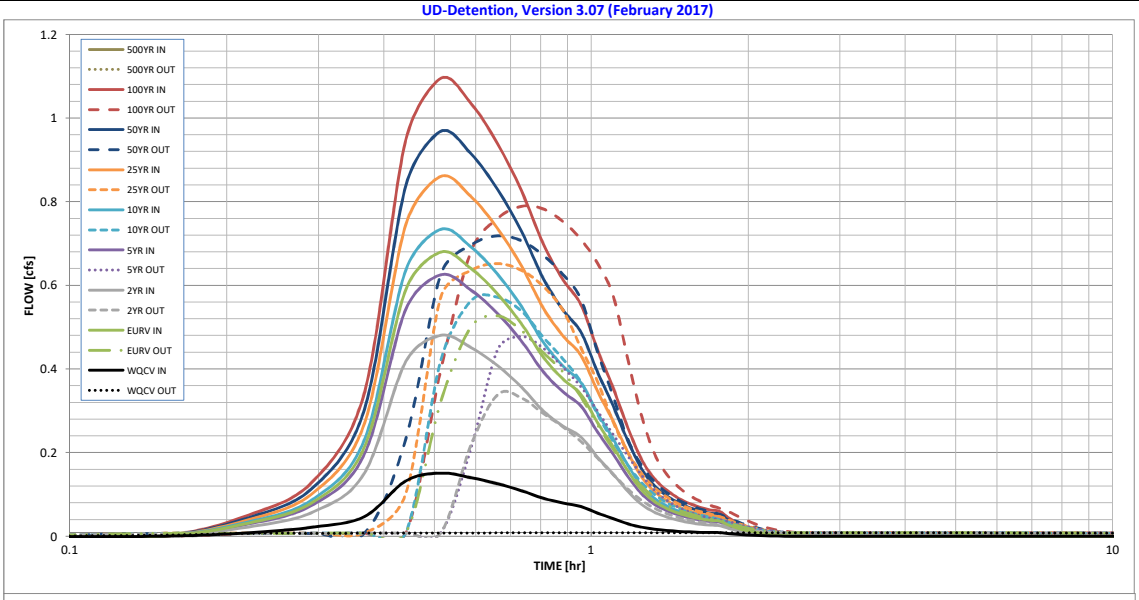

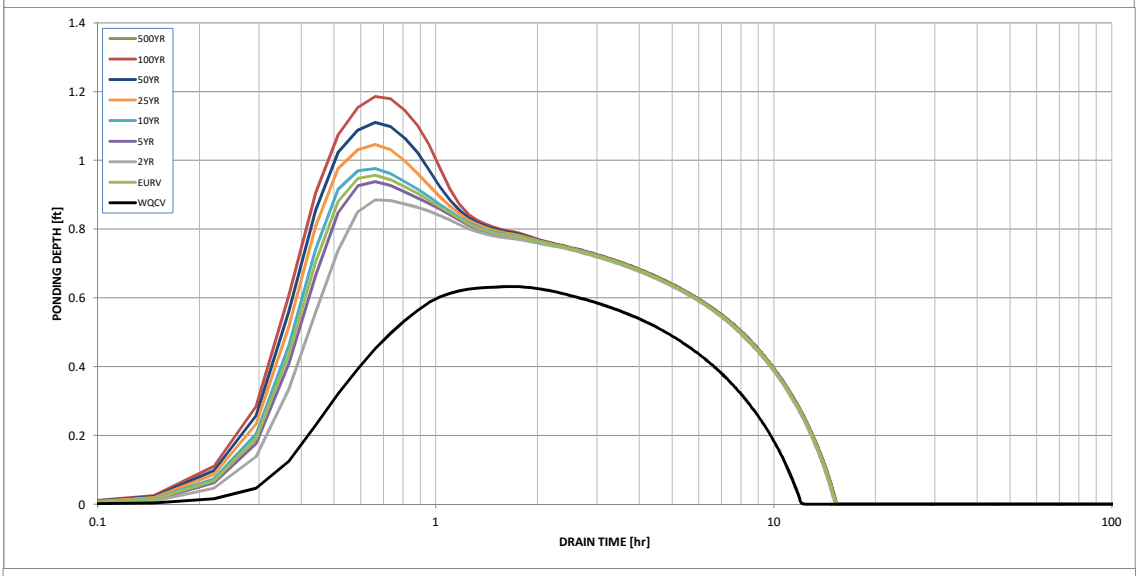

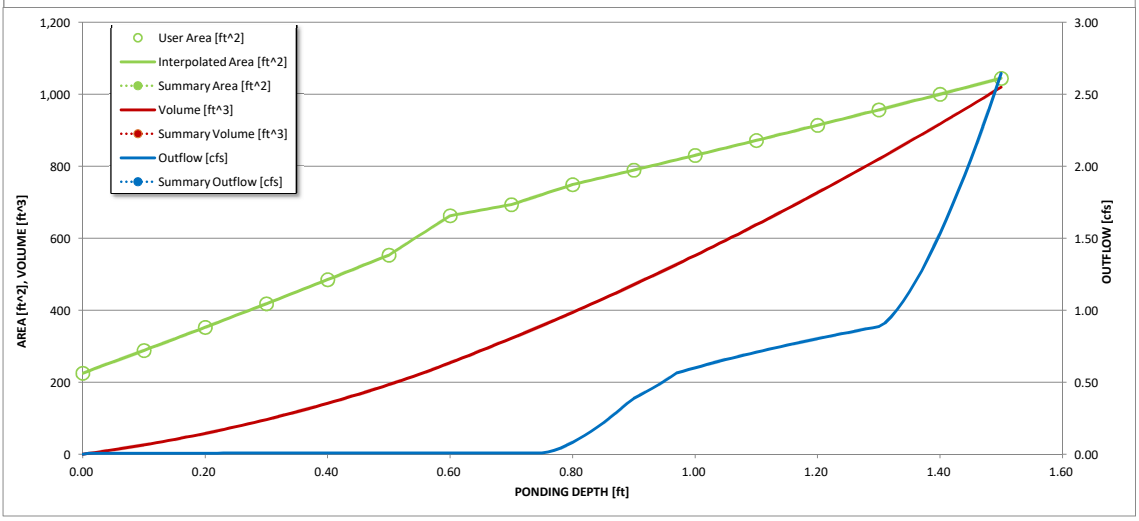

S-A-V-D Chart Axis Override	X-axis	Left Y-Axis	Right Y-Axis
minimum bound			
maximum bound			

Stormwater Detention and Infiltration Design Data Sheet

Workbook Protected Worksheet Protected

Stormwater Facility Name: **CBP Lot 13**

Facility Location & Jurisdiction: **7204 Cole Lane, Colorado Springs, CO 80915**

User Input: Watershed Characteristics

Watershed Slope =	0.020	ft/ft
Watershed Length =	175	ft
Watershed Area =	0.27	acres
Watershed Imperviousness =	95.0%	percent
Percentage Hydrologic Soil Group A =	100.0%	percent
Percentage Hydrologic Soil Group B =	0.0%	percent
Percentage Hydrologic Soil Groups C/D =	0.0%	percent

Location for 1-hr Rainfall Depths (use dropdown):

User Input

WQCV Treatment Method = Sand Filter

User Defined Stage [ft]	User Defined Area [ft^2]	User Defined Stage [ft]	User Defined Discharge [cfs]
0.00	225	0.00	0.00
0.10	288	0.10	0.01
0.20	352	0.20	0.01
0.30	418	0.30	0.01
0.40	485	0.40	0.01
0.50	553	0.50	0.01
0.60	662	0.60	0.01
0.70	693	0.70	0.01
0.80	749	0.80	0.08
0.90	789	0.90	0.42
1.00	830	1.00	0.57
1.10	872	1.10	0.71
1.20	914	1.20	0.79
1.30	956	1.30	0.89
1.40	1,000	1.40	1.32
1.50	1,044	1.50	2.53

After completing and printing this worksheet to a pdf, go to:
https://maperture.digitaldataservices.com/gvh/?viewer=cswdif
create a new stormwater facility, and
attach the pdf of this worksheet to that record.

Routed Hydrograph Results

Design Storm Return Period =	WQCV	2 Year	5 Year	10 Year	50 Year	100 Year	
One-Hour Rainfall Depth =	0.53	1.19	1.75	2.00	2.25	2.52	in
Calculated Runoff Volume =	0.008	0.025	0.037	0.043	0.050	0.057	acre-ft
OPTIONAL Override Runoff Volume =							acre-ft
Inflow Hydrograph Volume =	0.008	0.024	0.037	0.043	0.050	0.057	acre-ft
Time to Drain 97% of Inflow Volume =	11.0	11.9	**11.3**	11.1	10.9	10.5	hours
Time to Drain 99% of Inflow Volume =	11.9	12.8	12.6	12.5	12.4	**12.3**	hours
Maximum Ponding Depth =	0.64	0.88	0.99	1.06	1.14	1.25	ft
Maximum Ponded Area =	0.02	0.02	0.02	0.02	0.02	**0.02**	acres
Maximum Volume Stored =	0.006	0.010	0.012	0.014	0.015	0.018	acre-ft

Stormwater Detention and Infiltration Design Data Sheet

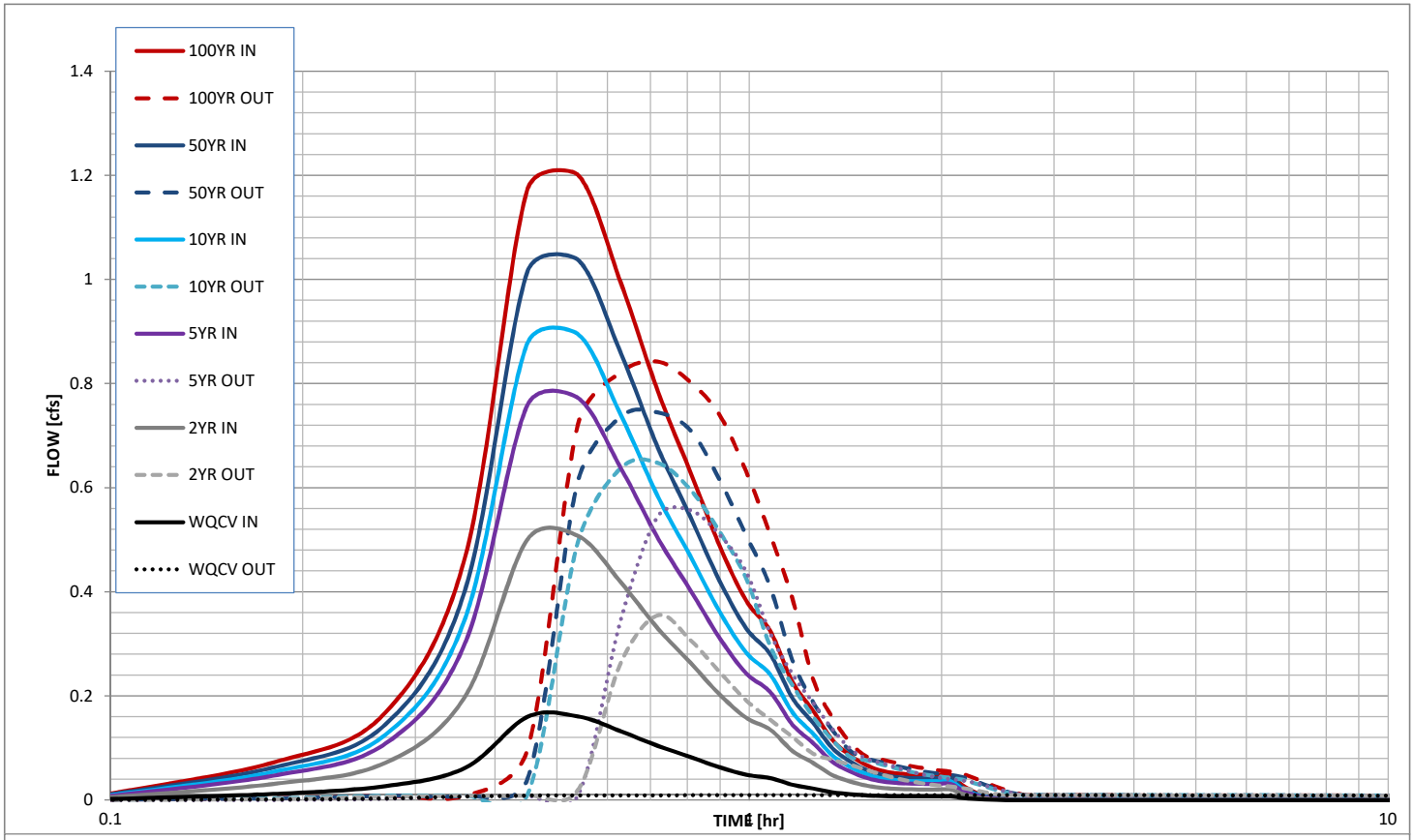

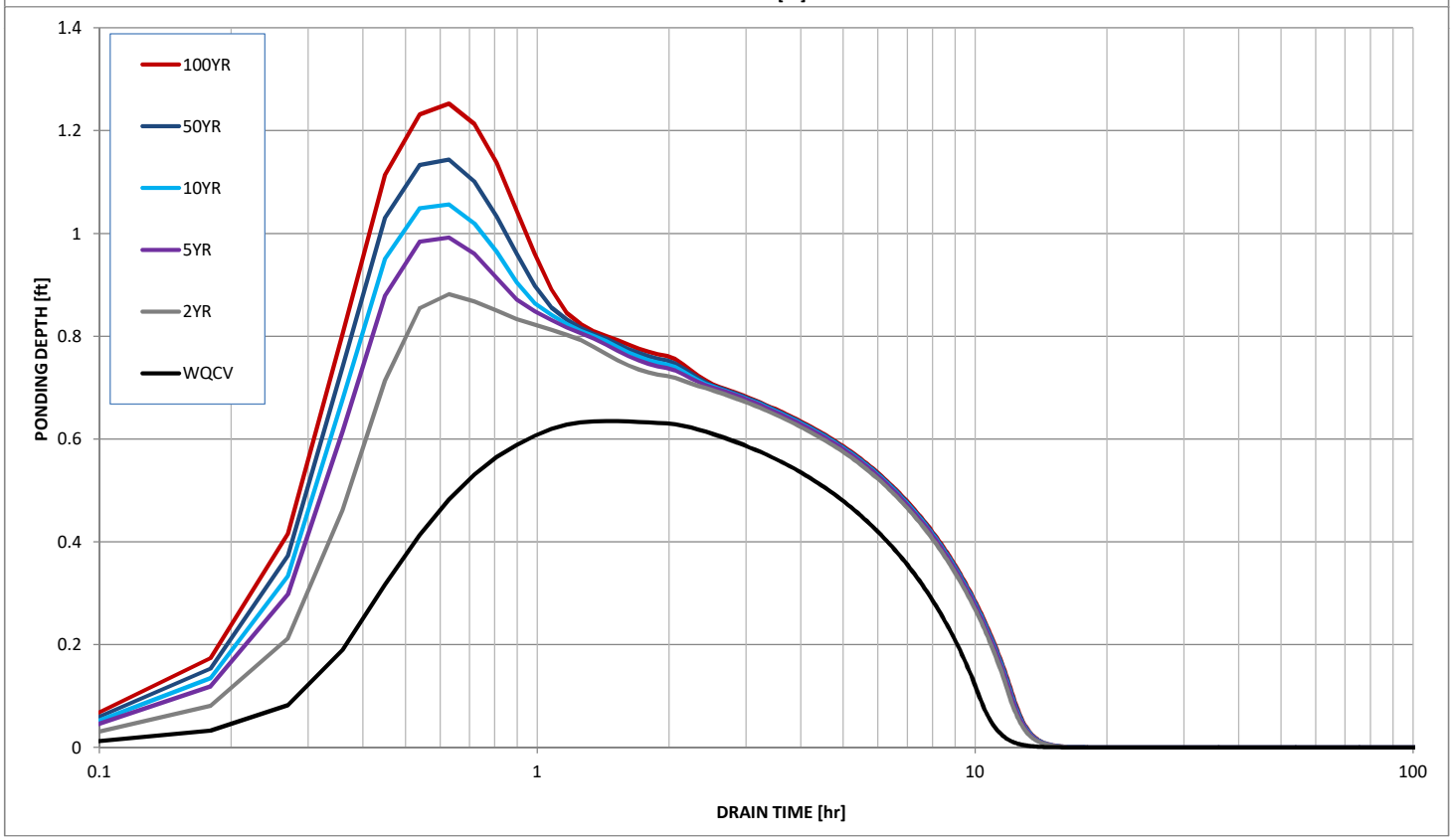

SOIL SURVEY

Soil Map—El Paso County Area, Colorado

MAP LEGEND

Area of Interest (AOI)

Area of Interest (AOI)

Soils

Soil Map Unit Polygons

Soil Map Unit Lines

Soil Map Unit Points

Special Point Features

Blowout

Borrow Pit

Clay Spot

Closed Depression

Gravel Pit

Gravelly Spot

Landfill

Lava Flow

Marsh or swamp

Mine or Quarry

Miscellaneous Water

Perennial Water

Rock Outcrop

Saline Spot

Sandy Spot

Severely Eroded Spot

Sinkhole

Slide or Slip

Sodic Spot

Spoil Area

Stony Spot

Very Stony Spot

Wet Spot

Other

Special Line Features

Water Features

Streams and Canals

Transportation

Rails

Interstate Highways

US Routes

Major Roads

Local Roads

Background

Aerial Photography

MAP INFORMATION

The soil surveys that comprise your AOI were mapped at 1:24,000.

Warning: Soil Map may not be valid at this scale.

Enlargement of maps beyond the scale of mapping can cause misunderstanding of the detail of mapping and accuracy of soil line placement. The maps do not show the small areas of contrasting soils that could have been shown at a more detailed scale.

Please rely on the bar scale on each map sheet for map measurements.

Source of Map: Natural Resources Conservation Service
Web Soil Survey URL:
Coordinate System: Web Mercator (EPSG:3857)

Maps from the Web Soil Survey are based on the Web Mercator projection, which preserves direction and shape but distorts distance and area. A projection that preserves area, such as the Albers equal-area conic projection, should be used if more accurate calculations of distance or area are required.

This product is generated from the USDA-NRCS certified data as of the version date(s) listed below.

Soil Survey Area: El Paso County Area, Colorado
Survey Area Data: Version 15, Oct 10, 2017

Soil map units are labeled (as space allows) for map scales 1:50,000 or larger.

Date(s) aerial images were photographed: Jun 3, 2014—Jun 17, 2014

The orthophoto or other base map on which the soil lines were compiled and digitized probably differs from the background imagery displayed on these maps. As a result, some minor shifting of map unit boundaries may be evident.

Map Unit Legend

Map Unit Symbol	Map Unit Name	Acres in AOI	Percent of AOI
28	Ellicott loamy coarse sand, 0 to 5 percent slopes	0.5	100.0%
Totals for Area of Interest		**0.5**	**100.0%**

El Paso County Area, Colorado

28—Ellicott loamy coarse sand, 0 to 5 percent slopes

Map Unit Setting

National map unit symbol: 3680
Elevation: 5,500 to 6,500 feet
Mean annual precipitation: 13 to 15 inches
Mean annual air temperature: 47 to 50 degrees F
Frost-free period: 125 to 145 days
Farmland classification: Not prime farmland

Map Unit Composition

Ellicott and similar soils: 85 percent
Estimates are based on observations, descriptions, and transects of the mapunit.

Description of Ellicott

Setting

Landform: Flood plains, stream terraces
Landform position (three-dimensional): Tread
Down-slope shape: Linear
Across-slope shape: Linear
Parent material: Sandy alluvium

Typical profile

A - 0 to 4 inches: loamy coarse sand
C - 4 to 60 inches: stratified coarse sand to sandy loam

Properties and qualities

Slope: 0 to 5 percent
Depth to restrictive feature: More than 80 inches
Natural drainage class: Somewhat excessively drained
Runoff class: Very low
Capacity of the most limiting layer to transmit water (Ksat): High to very high (5.95 to 19.98 in/hr)
Depth to water table: More than 80 inches
Frequency of flooding: Frequent
Frequency of ponding: None
Available water storage in profile: Low (about 4.1 inches)

Interpretive groups

Land capability classification (irrigated): None specified
Land capability classification (nonirrigated): 7w
Hydrologic Soil Group: A
Ecological site: Sandy Bottomland LRU's A & B (R069XY031CO)
Other vegetative classification: SANDY BOTTOMLAND (069AY031CO)
Hydric soil rating: No

Minor Components

Fluvaquentic haplaquoll
Percent of map unit:
Landform: Swales
Hydric soil rating: Yes

Other soils
Percent of map unit:
Hydric soil rating: No

Pleasant
Percent of map unit:
Landform: Depressions
Hydric soil rating: Yes

Data Source Information

Soil Survey Area: El Paso County Area, Colorado
Survey Area Data: Version 15, Oct 10, 2017

FEMA MAP / LOMR

Federal Emergency Management Agency
Washington, D.C. 20472

LETTER OF MAP REVISION
DETERMINATION DOCUMENT (CONTINUED)

PUBLIC NOTIFICATION OF REVISION

A notice of changes will be published in the *Federal Register*. This information also will be published in your local newspaper on or about the dates listed below, and through FEMA's Flood Hazard Mapping website at https://www.floodmaps.fema.gov/fhm/bfe_status/bfe_main.asp

LOCAL NEWSPAPER

Name: *Colorado Springs Gazette*

Dates: March 30, 2018 and April 6, 2018

Within 90 days of the second publication in the local newspaper, any interested party may request that we reconsider this determination. Any request for reconsideration must be based on scientific or technical data. Therefore, this letter will be effective only after the 90-day appeal period has elapsed and we have resolved any appeals that we receive during this appeal period. Until this LOMR is effective, the revised flood hazard determination presented in this LOMR may be changed.

This determination is based on the flood data presently available. The enclosed documents provide additional information regarding this determination. If you have any questions about this document, please contact the FEMA Map Information eXchange toll free at 1-877-336-2627 (1-877-FEMA MAP) or by letter addressed to the LOMC Clearinghouse, 3601 Eisenhower Avenue Suite 500, Alexandria, VA 22304-6426. Additional Information about the NFIP is available on our website at https://www.fema.gov/national-flood-insurance-program.

Patrick "Rick" F. Sacbibit, P.E., Branch Chief
Engineering Services Branch
Federal Insurance and Mitigation Administration

FLOODING SOURCE		FLOODWAY			BASE FLOOD WATER SURFACE ELEVATION			
CROSS SECTION	DISTANCE[1]	WIDTH (FEET)	SECTION AREA (SQUARE FEET)	MEAN VELOCITY (FEET PER SECOND)	REGULATORY	WITHOUT FLOODWAY FEET (NGVD)	WITH FLOODWAY	INCREASE
Sand Creek East Fork								
A	1,100	100	455	11.9	6,038.7	6,038.7	6,038.7	0.0
B	2,400	100	446	12.2	6,054.3	6,054.3	6,054.3	0.0
C	3,330	100	450	12.0	6,069.9	6,069.9	6,069.9	0.0
D	4,240	100	449	12.1	6,085.1	6,085.1	6,085.1	0.0
E	4,870	102	446	12.0	6,095.1	6,095.1	6,095.1	0.0
F	6,188	70	489	10.9	6,118.5	6,118.5	6,118.5	0.0
G	7,403	71	396	13.5	6,136.0	6,136.0	6,136.0	0.0
H	7,931	148	507	10.5	6,158.8	6,158.8	6,158.8	0.0
I	8,943	98	444	12.0	6,169.0	6,169.0	6,169.0	0.0
J	9,666	86	423	12.6	6,177.0	6,177.0	6,177.0	0.0
K	10,721	81	415	12.8	6,193.3	6,193.3	6,193.3	0.0
L	11,347	166	526	10.1	6,207.3	6,207.3	6,207.3	0.0
M	11,375	173	632	8.4	6,207.9	6,207.9	6,207.9	0.0
N	12,610	367	699	7.6	6,228.8	6,228.8	6,228.8	0.1
O	13,720	188	570	10.0	6,241.7	6,241.7	6,241.7	0.0
P	14,805	125	479	11.1	6,257.9	6,257.9	6,257.9	0.0
Q	14,885	125	601	8.9	6,259.9	6,259.9	6,259.9	1.0
R	15,850	228	582	9.2	6,268.7	6,268.7	6,268.7	0.0
S	16,325	300	678	7.9	6,277.3	6,277.3	6,277.5	0.2
T	16,995	321	690	7.7	6,291.4	6,291.4	6,292.0	0.6
U	17,065	326	667	8.0	6,291.4	6,291.4	6,292.1	0.7
V	17,915	388	1,601	3.3	6,293.4	6,293.4	6,294.0	0.6
W	19,110	158	697	7.7	6,309.5	6,309.5	6,309.5	0.0
X	20,730	103	575	11.7	6,327.8	6,327.8	6,328.4	0.6
Y	22,560	142	506	11.0	6,348.8	6,348.8	6,349.4	0.6
Z	23,060	145	503	11.0	6,358.0	6,358.0	6,358.0	0.0
AA	24,835	418	3,156	7.0	6,383.5	6,383.5	6,383.5	0.0
AB	26,470	132	452	10.0	6,402.7	6,402.7	6,402.7	0.0
AC	27,715	112	419	10.8	6,416.6	6,416.6	6,416.6	0.0

REVISED BY LOMR DATED MAY 23, 2007

REVISED BY LOMR DATED OCTOBER 07, 2004

REVISED DATA

REVISED BY LOMR DATED DECEMBER 13, 2006

[1] Feet Above Confluence with Sand Creek

REVISED BY LOMR DATED OCTOBER 30, 2006

REVISED TO REFLECT LOMR EFFECTIVE: August 6, 2018

TABLE 5

FEDERAL EMERGENCY MANAGEMENT AGENCY

EL PASO COUNTY, CO

AND INCORPORATED AREAS

FLOODWAY DATA

SAND CREEK EAST FORK

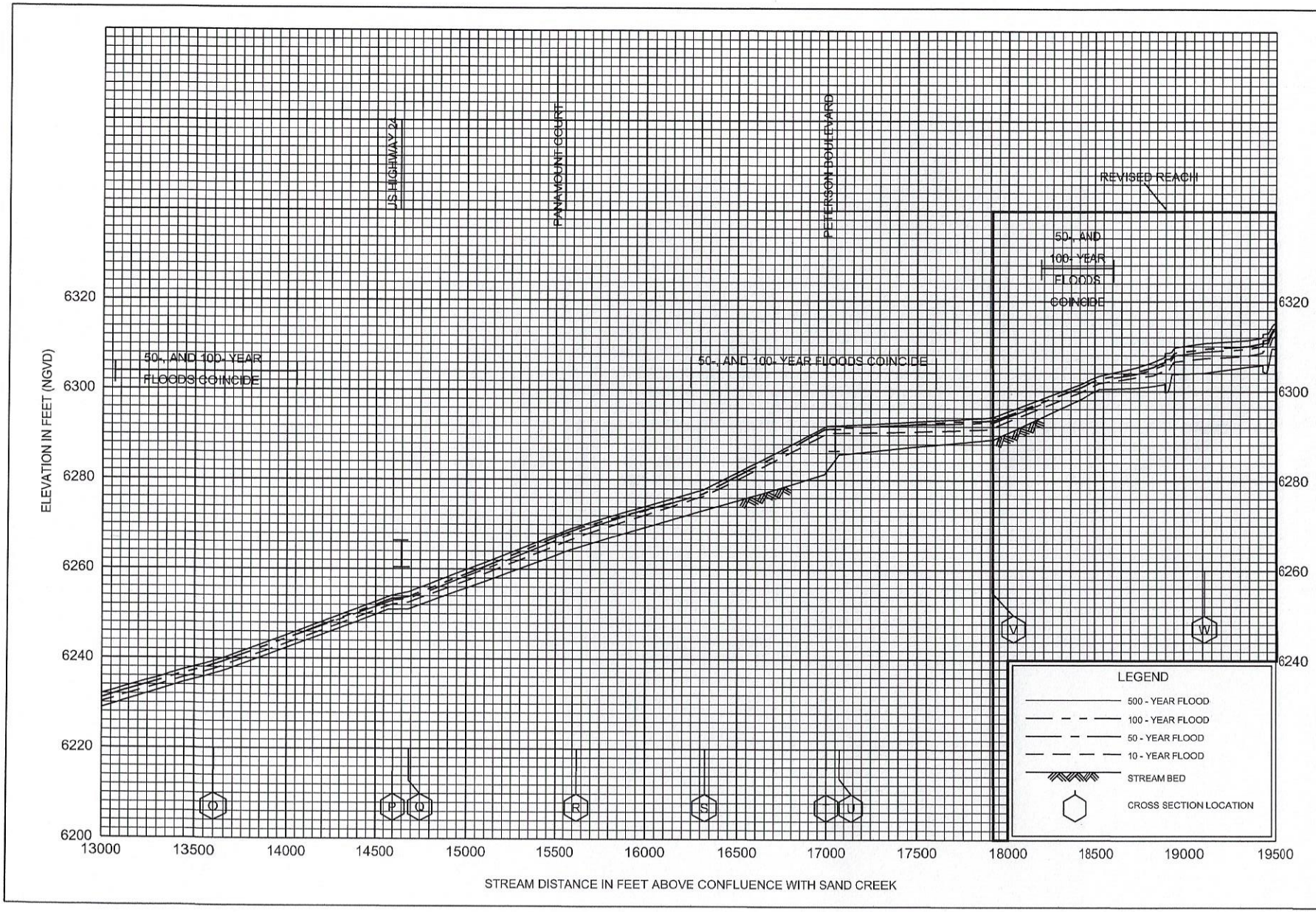

REVISED TO REFLECT LOMR
EFFECTIVE: August 6, 2018

FLOOD PROFILES

SAND CREEK EAST FORK

FEDERAL EMERGENCY MANAGEMENT AGENCY

EL PASO COUNTY, CO

AND INCORPORATED AREAS

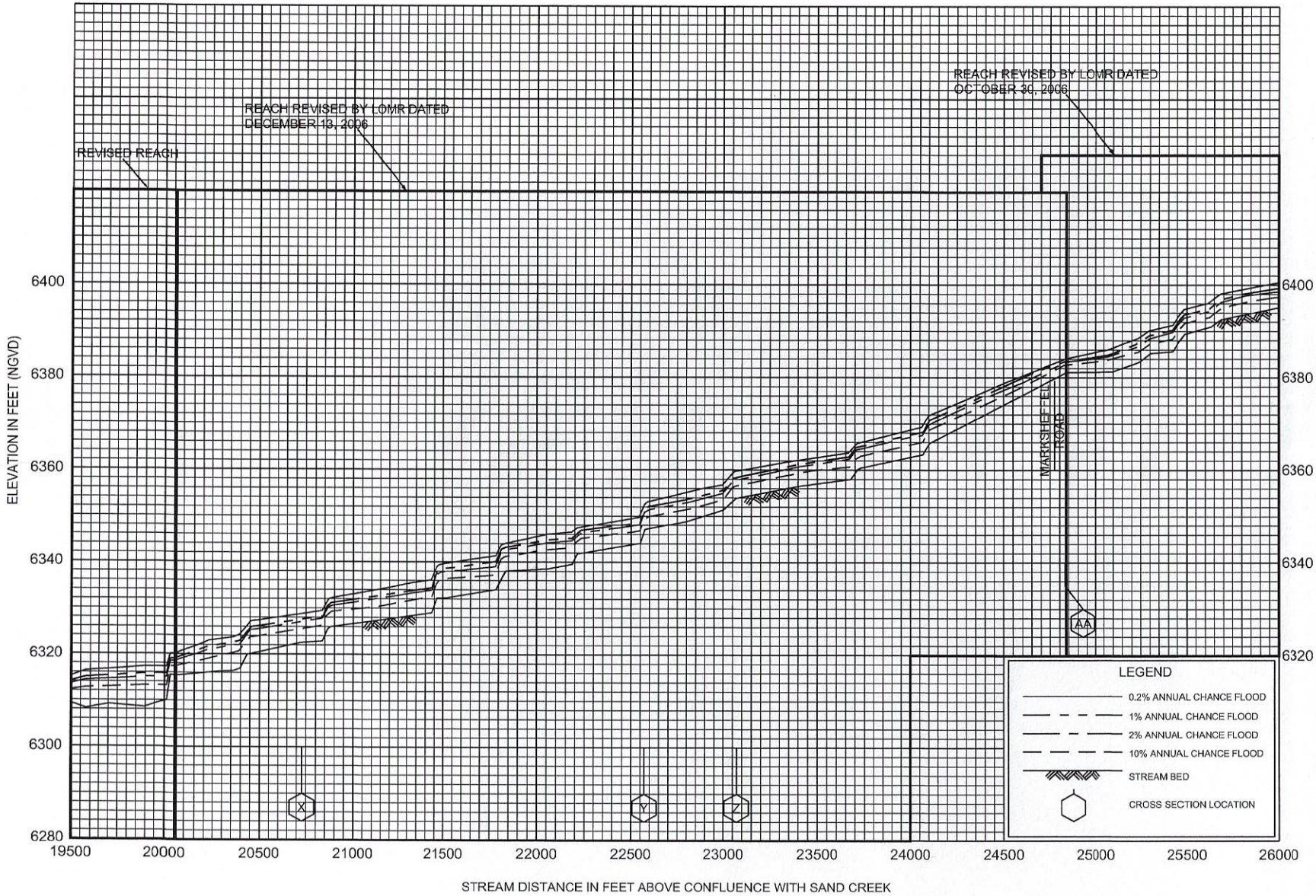

REVISED TO REFLECT LOMR EFFECTIVE: August 6, 2018

FLOOD PROFILES

SAND CREEK EAST FORK

FEDERAL EMERGENCY MANAGEMENT AGENCY

EL PASO COUNTY, CO

AND INCORPORATED AREAS

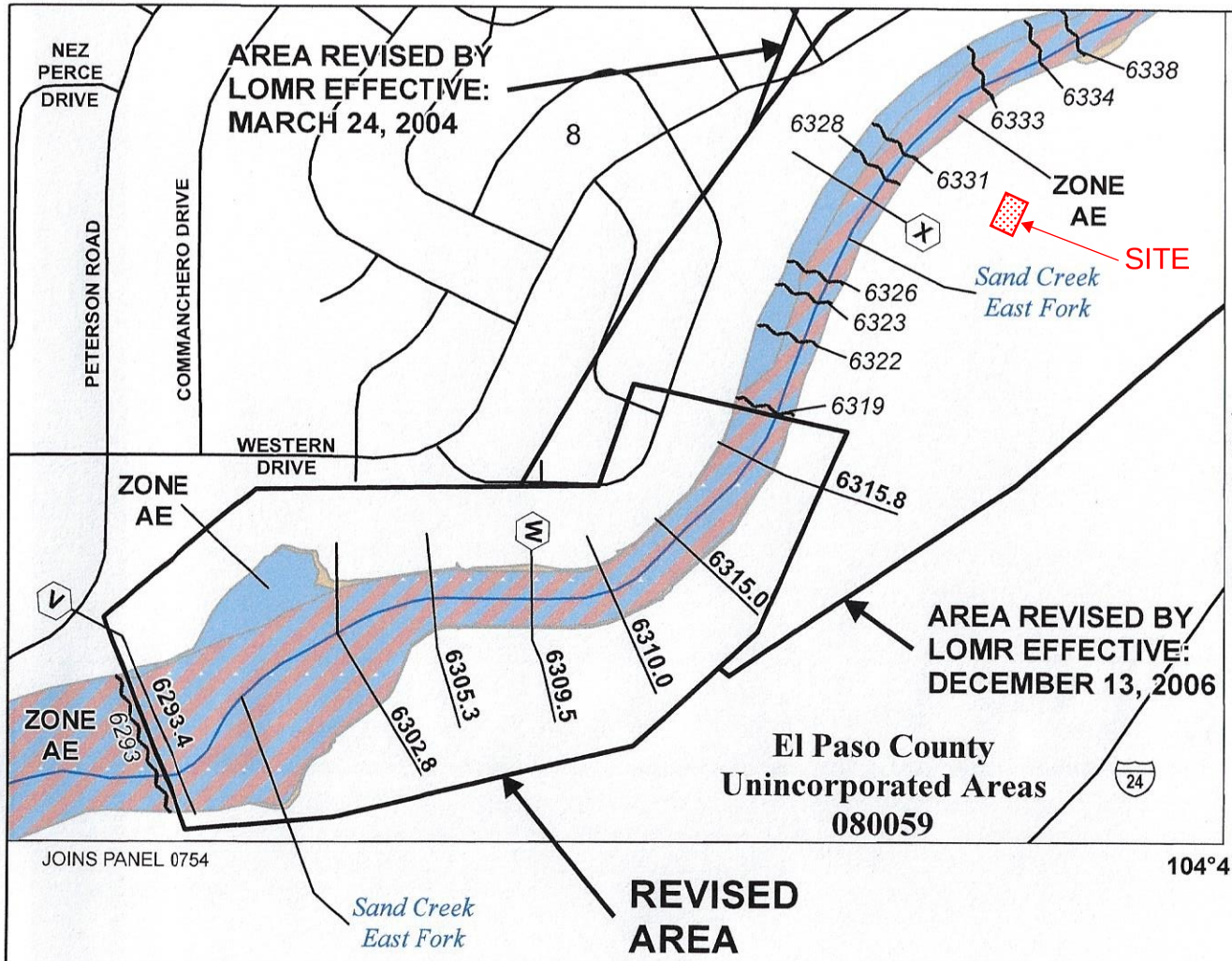

NOTE: MAP AREA SHOWN ON THIS PANEL IS LOCATED WITHIN TOWNSHIP 13 SOUTH, RANGE 65 WEST AND TOWNSHIP 14 SOUTH, RANGE 65 WEST.

SPECIAL FLOOD HAZARD AREAS	Without Base Flood Elevation (BFE) *Zone A, V, A99*
	With BFE or Depth *Zone AE, AO, AH, VE, AR*
	Regulatory Floodway
OTHER AREAS OF FLOOD HAZARD	0.2 % Annual Chance Flood Hazard, Areas of 1% annual chance flood with average depth less than one foot or with drainage areas of less than one square mile *Zone X*
	Future Conditions 1% Annual Chance Flood Hazard *Zone X*
	Area with Reduced Flood Risk due to Levee See Notes. *Zone X*

SCALE

N

Map Projection:
Universal Transverse MercatorNAD 1983 UTM Zone 13N
Western Hemisphere; Vertical Datum: NGVD 29

1 inch = 500 feet 1:6,000

0 250 500 1,000 Feet

0 62.5 125 250 Meters

FEMA

National Flood Insurance Program

NATIONAL FLOOD INSURANCE PROGRAM

FLOOD INSURANCE RATE MAP

EL PASO COUNTY, COLORADO

and Incorporated Areas

PANEL 752 OF 1300

FEMA

Panel Contains:

COMMUNITY	NUMBER	PANEL	SUFFIX
COLORADO SPRINGS, CITY OF	080060	0752	F
EL PASO COUNTY, UNINCORPORATED AREAS	080059	0752	F

REVISED TO REFLECT LOMR EFFECTIVE: August 6, 2018

MAP NUMBER
08041C0752 F

EFFECTIVE DATE
MARCH 17, 1997

DRAINAGE MAP / GRADING PLAN

CBP, LOT 13

EL PASO COUNTY, STATE OF COLORADO
UTILITY SERVICE PLAN

LOT 13 OF CLAREMONT BUSINESS PARK FIL. NO. 2

PROPOSED DRAINAGE MAP

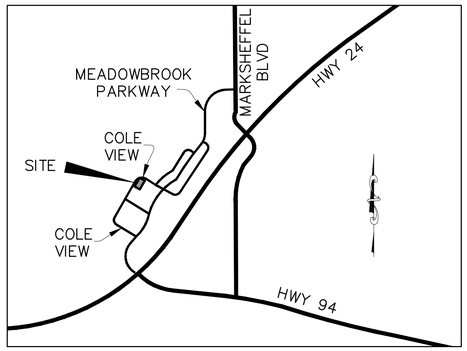

VICINITY MAP
N.T.S.

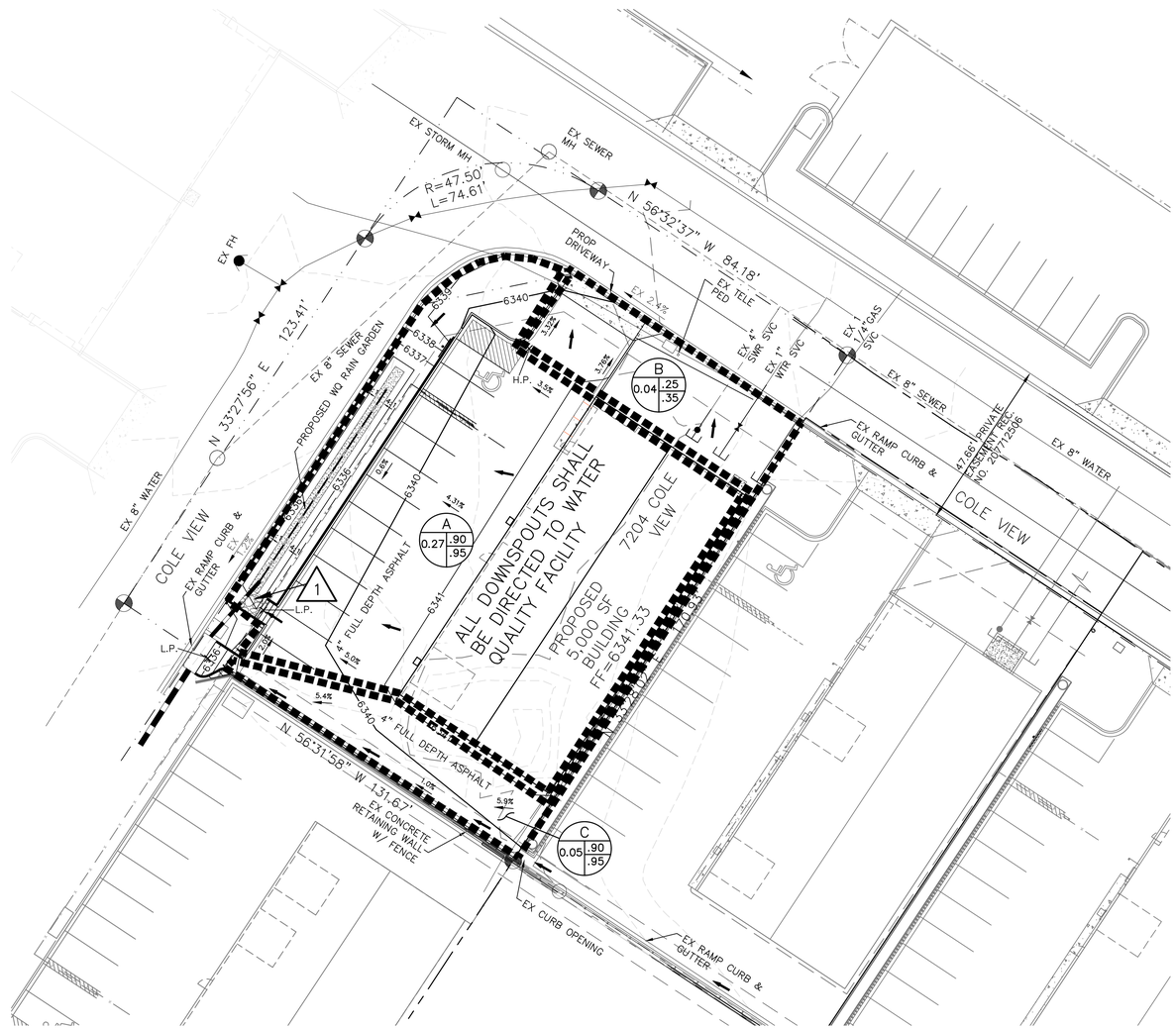

LEGEND

BASIN DESIGNATION (Z; 25; .25/.35; C5; C100; ACRES)	
1	SURFACE DESIGN POINT
	CURRENT DEVELOPMENT BASIN BOUNDARY
— — (6920) — —	EXISTING CONTOUR
— 6920 —	PROP CONTOUR
	EXISTING STORM SEWER PIPE
	INLET
	EXISTING FLOW DIRECTION ARROW
	FLOW DIRECTION
H.P. ×	HIGH POINT
L.P. ×	LOW POINT

1" = 20'

0 10 20 40
Scale in Feet

DRAINAGE MAP
CBP, LOT 13
JOB NO. 44-028
DATE PREPARED: SEPTEMBER 16, 2018
DATE REVISED: NOVEMBER 5, 2018

EL PASO COUNTY FILE NO. PPR 18-044

M&S CIVIL CONSULTANTS, INC.
20 BOULDER CRESCENT, SUITE 110
COLORADO SPRINGS, CO 80903
PHONE: 719.955.5485

SHEET 1 OF 1

CBP , LOT 13

EL PASO COUNTY, STATE OF COLORADO
GRADING & EROSION CONTROL PLAN
LOT 13 OF CLAREMONT BUSINESS PARK FIL. NO. 2

GRADING AND EROSION CONTROL NOTES:

1. CONSTRUCTION MAY NOT COMMENCE UNTIL A CONSTRUCTION PERMIT IS OBTAINED FROM PLANNING AND COMMUNITY DEVELOPMENT AND A PRECONSTRUCTION CONFERENCE IS HELD WITH DEVELOPMENT SERVICES INSPECTIONS.

2. STORMWATER DISCHARGES FROM CONSTRUCTION SITES SHALL NOT CAUSE OR THREATEN TO CAUSE POLLUTION, CONTAMINATION, OR DEGRADATION OF STATE WATERS. ALL WORK AND EARTH DISTURBANCE SHALL BE DONE IN A MANNER THAT MINIMIZES POLLUTION OF ANY ON-SITE OR OFF SITE WATERS, INCLUDING WETLANDS.

3. NOTWITHSTANDING ANYTHING DEPICTED IN THESE PLANS IN WORDS OR GRAPHIC REPRESENTATION, ALL DESIGN AND CONSTRUCTION RELATED TO ROADS, STORM DRAINAGE AND EROSION CONTROL SHALL CONFORM TO THE STANDARDS AND REQUIREMENTS OF THE MOST RECENT VERSION OF THE RELEVANT ADOPTED EL PASO COUNTY STANDARDS, INCLUDING THE LAND DEVELOPMENT CODE, THE ENGINEERING CRITERIA MANUAL, THE DRAINAGE CRITERIA MANUAL, AND THE DRAINAGE CRITERIA MANUAL VOLUME 2. ANY DEVIATIONS TO REGULATIONS AND STANDARDS MUST BE REQUESTED, AND APPROVED, IN WRITING.

4. A SEPARATE STORMWATER MANAGEMENT PLAN (SMWP) FOR THIS PROJECT SHALL BE COMPLETED AND AN EROSION AND STORMWATER QUALITY CONTROL PERMIT (ESQCP) ISSUED PRIOR TO COMMENCING CONSTRUCTION. DURING CONSTRUCTION THE SWMP IS THE RESPONSIBILITY OF THE DESIGNATED STORMWATER MANAGER, SHALL BE LOCATED ON SITE AT ALL TIMES AND SHALL BE KEPT UP TO DATE WITH WORK PROGRESS AND CHANGES IN THE FIELD.

5. ONCE THE ESQCP HAS BEEN ISSUED, THE CONTRACTOR MAY INSTALL THE INITIAL STAGE EROSION AND SEDIMENT CONTROL BMPS AS INDICATED ON THE GEC. A PRECONSTRUCTION MEETING BETWEEN THE CONTRACTOR, ENGINEER, AND EL PASO COUNTY WILL BE HELD PRIOR TO ANY CONSTRUCTION. IT IS THE RESPONSIBILITY OF THE APPLICANT TO COORDINATE THE MEETING TIME AND PLACE WITH COUNTY PCD INSPECTIONS STAFF.

6. SOIL EROSION CONTROL MEASURES FOR ALL SLOPES, CHANNELS, DITCHES, OR ANY DISTURBED LAND AREA SHALL BE COMPLETED WITHIN 21 CALENDAR DAYS AFTER FINAL GRADING, OR FINAL EARTH DISTURBANCE, HAS BEEN COMPLETED. DISTURBED AREAS AND STOCKPILES WHICH ARE NOT AT FINAL GRADE BUT WILL REMAIN DORMANT FOR LONGER THAN 30 DAYS SHALL ALSO BE MULCHED WITHIN 21 DAYS AFTER INTERIM GRADING. AN AREA THAT IS GOING TO REMAIN IN AN INTERIM STATE FOR MORE THAN 60 DAYS SHALL ALSO BE SEEDED. ALL TEMPORARY SOIL EROSION CONTROL MEASURES AND BMPS SHALL BE MAINTAINED UNTIL PERMANENT SOIL EROSION CONTROL MEASURES ARE IMPLEMENTED AND ESTABLISHED.

7. TEMPORARY SOIL EROSION CONTROL FACILITIES SHALL BE REMOVED AND EARTH DISTURBANCE AREAS GRADED AND STABILIZED WITH PERMANENT SOIL EROSION CONTROL MEASURES PURSUANT TO STANDARDS AND SPECIFICATION PRESCRIBED IN THE DCM VOLUME II AND THE ENGINEERING CRITERIA MANUAL (ECM) APPENDIX I.

8. ALL PERSONS ENGAGED IN EARTH DISTURBANCE SHALL IMPLEMENT AND MAINTAIN ACCEPTABLE SOIL EROSION AND SEDIMENT CONTROL MEASURES INCLUDING BMPS IN CONFORMANCE WITH THE EROSION CONTROL TECHNICAL STANDARDS OF THE DRAINAGE CRITERIA MANUAL (DCM) VOLUME II AND IN ACCORDANCE WITH THE STORMWATER MANAGEMENT PLAN (SWMP).

9. ALL TEMPORARY EROSION CONTROL FACILITIES INCLUDING BMPS AND ALL PERMANENT FACILITIES INTENDED TO CONTROL EROSION OF ANY EARTH DISTURBANCE OPERATIONS, SHALL BE INSTALLED AS DEFINED IN THE APPROVED PLANS, THE SWMP AND THE DCM VOLUME II AND MAINTAINED THROUGHOUT THE DURATION OF THE EARTH DISTURBANCE OPERATION.

10. ANY EARTH DISTURBANCE SHALL BE CONDUCTED IN SUCH A MANNER SO AS TO EFFECTIVELY REDUCE ACCELERATED SOIL EROSION AND RESULTING SEDIMENTATION. ALL DISTURBANCES SHALL BE DESIGNED, CONSTRUCTED, AND COMPLETED SO THAT THE EXPOSED AREA OF ANY DISTURBED LAND SHALL BE LIMITED TO THE SHORTEST PRACTICAL PERIOD OF TIME.

11. ANY TEMPORARY OR PERMANENT FACILITY DESIGNED AND CONSTRUCTED FOR THE CONVEYANCE OF STORMWATER AROUND, THROUGH, OR FROM THE EARTH DISTURBANCE AREA SHALL BE DESIGNED TO LIMIT THE DISCHARGE TO A NON-EROSIVE VELOCITY.

12. CONCRETE WASH WATER SHALL BE CONTAINED AND DISPOSED OF IN ACCORDANCE WITH THE SWMP. NO WASH WATER SHALL BE DISCHARGED TO OR ALLOWED TO RUNOFF TO STATE WATERS, INCLUDING ANY SURFACE OR SUBSURFACE STORM DRAINAGE SYSTEM OR FACILITIES.

13. EROSION CONTROL BLANKETING IS TO BE USED ON SLOPES STEEPER THAN 3:1.

14. BUILDING, CONSTRUCTION, EXCAVATION, OR OTHER WASTE MATERIALS SHALL NOT BE TEMPORARILY PLACED OR STORED IN THE STREET, ALLEY, OR OTHER PUBLIC WAY, UNLESS IN ACCORDANCE WITH AN APPROVED TRAFFIC CONTROL PLAN. BMP'S MAY BE REQUIRED BY EL PASO COUNTY ENGINEERING IF DEEMED NECESSARY, BASED ON SPECIFIC CONDITIONS AND CIRCUMSTANCES.

15. VEHICLE TRACKING OF SOILS AND CONSTRUCTION DEBRIS OFF-SITE SHALL BE MINIMIZED. MATERIALS TRACKED OFFSITE SHALL BE CLEANED UP AND PROPERLY DISPOSED OF IMMEDIATELY.

16. CONTRACTOR SHALL BE RESPONSIBLE FOR THE REMOVAL OF ALL WASTES FROM THE CONSTRUCTION SITE FOR DISPOSAL IN ACCORDANCE WITH LOCAL AND STATE REGULATORY REQUIREMENTS. NO CONSTRUCTION DEBRIS, TREE SLASH, BUILDING MATERIAL WASTES OR UNUSED BUILDING MATERIALS SHALL BE BURIED, DUMPED, OR DISCHARGED AT THE SITE.

17. THE OWNER, SITE DEVELOPER, CONTRACTOR, AND/OR THEIR AUTHORIZED AGENTS SHALL BE RESPONSIBLE FOR THE REMOVAL OF ALL CONSTRUCTION DEBRIS, DIRT, TRASH, ROCK, SEDIMENT, AND SAND THAT MAY ACCUMULATE IN THE STORM SEWER OR OTHER DRAINAGE CONVEYANCE SYSTEM AND STORMWATER APPURTENANCES AS A RESULT OF SITE DEVELOPMENT.

18. THE QUANTITY OF MATERIALS STORED ON THE PROJECT SITE SHALL BE LIMITED, AS MUCH AS PRACTICAL, TO THAT QUANTITY REQUIRED TO PERFORM THE WORK IN AN ORDERLY SEQUENCE. ALL MATERIALS STORED ON-SITE SHALL BE STORED IN A NEAT, ORDERLY MANNER, IN THEIR ORIGINAL CONTAINERS, WITH ORIGINAL MANUFACTURER'S LABELS.

19. NO CHEMICALS ARE TO BE USED BY THE CONTRACTOR, WHICH HAVE THE POTENTIAL TO BE RELEASED IN STORMWATER UNLESS PERMISSION FOR THE USE OF A SPECIFIC CHEMICAL IS GRANTED IN WRITING BY THE ECM ADMINISTRATOR. IN GRANTING THE USE OF SUCH CHEMICALS, SPECIAL CONDITIONS AND MONITORING MAY BE REQUIRED.

20. BULK STORAGE STRUCTURES FOR PETROLEUM PRODUCTS AND OTHER CHEMICALS SHALL HAVE ADEQUATE PROTECTION SO AS TO CONTAIN ALL SPILLS AND PREVENT ANY SPILLED MATERIAL FROM ENTERING STATE WATERS, INCLUDING ANY SURFACE OR SUBSURFACE STORM DRAINAGE SYSTEM OR FACILITIES.

21. NO PERSON SHALL CAUSE THE IMPEDIMENT OF STORMWATER FLOW IN THE FLOW LINE OF THE CURB AND GUTTER OR IN THE DITCHLINE.

22. INDIVIDUALS SHALL COMPLY WITH THE "COLORADO WATER QUALITY CONTROL ACT" (TITLE 25, ARTICLE 8, CRS), AND THE "CLEAN WATER ACT" (33 USC 1344), IN ADDITION TO THE REQUIREMENTS INCLUDED IN THE DCM VOLUME II AND THE ECM APPENDIX I. ALL APPROPRIATE PERMITS MUST BE OBTAINED BY THE CONTRACTOR PRIOR TO CONSTRUCTION (NPDES, FLOODPLAIN, 404, FUGITIVE DUST, ETC.). IN THE EVENT OF CONFLICTS BETWEEN THESE REQUIREMENTS AND LAWS, RULES, OR REGULATIONS OF OTHER FEDERAL, STATE, OR COUNTY AGENCIES, THE MORE RESTRICTIVE LAWS, RULES, OR REGULATIONS SHALL APPLY.

23. ALL CONSTRUCTION TRAFFIC MUST ENTER/EXIT THE SITE AT APPROVED CONSTRUCTION ACCESS POINTS.

24. PRIOR TO ACTUAL CONSTRUCTION THE PERMITEE SHALL VERIFY THE LOCATION OF EXISTING UTILITIES.

25. A WATER SOURCE SHALL BE AVAILABLE ON SITE DURING EARTHWORK OPERATIONS AND UTILIZED AS REQUIRED TO MINIMIZE DUST FROM EARTHWORK EQUIPMENT AND WIND.

26. THE SOILS REPORT FOR THIS SITE HAS BEEN PREPARED BY ENTECH ENGINEERING, INC. # 76021 JUNE 1, 2011. AND SHALL BE CONSIDERED A PART OF THESE PLANS.

27. AT LEAST TEN DAYS PRIOR TO THE ANTICIPATED START OF CONSTRUCTION, FOR PROJECTS THAT WILL DISTURB 1 ACRE OR MORE, THE OWNER OR OPERATOR OF CONSTRUCTION ACTIVITY SHALL SUBMIT A PERMIT APPLICATION FOR STORMWATER DISCHARGE TO THE COLORADO DEPARTMENT OF PUBLIC HEALTH AND ENVIRONMENT, WATER QUALITY DIVISION. THE APPLICATION CONTAINS CERTIFICATION OF COMPLETION OF A STORMWATER MANAGEMENT PLAN (SWMP), OF WHICH THIS GRADING AND EROSION CONTROL PLAN MAY BE A PART. FOR INFORMATION OR APPLICATION MATERIALS CONTACT:

COLORADO DEPARTMENT OF PUBLIC HEALTH AND ENVIRONMENT
WATER QUALITY CONTROL DIVISION
WQCD - PERMITS
4300 CHERRY CREEK DRIVE SOUTH
DENVER, CO 80246-1530
ATTN: PERMITS UNIT

FOR BURIED UTILITY INFORMATION
48 HRS BEFORE YOU DIG
CALL 1-800-922-1987
FOR LOCATING & MARKING GAS, ELECTRIC, WATER & TELEPHONE LINES
WATER EMERGENCIES 520-0300

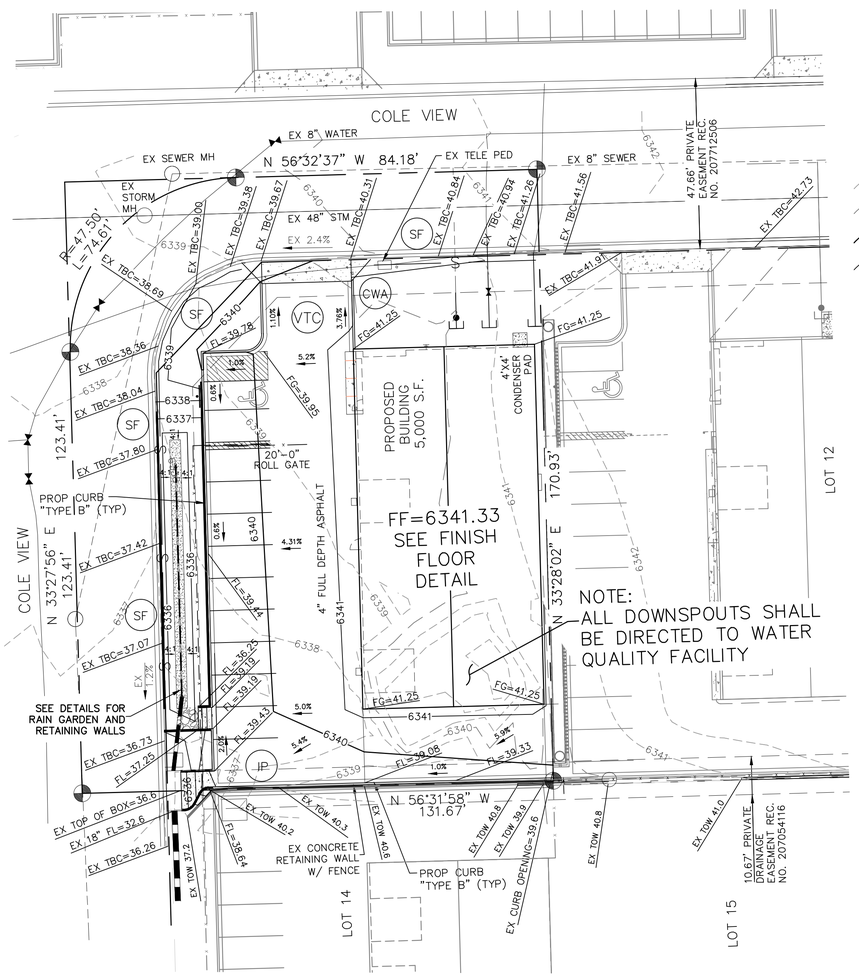

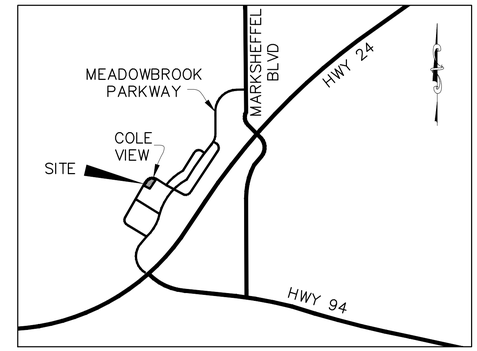

VICINITY MAP
N.T.S.

LEGEND

	EX MAJ CONT
	EX MIN CONT
	PROP MAJ CONT
	PROP MIN CONT
LP	LOW POINT
HP	HIGH POINT
EX	EXISTING
FL	FLOWLINE
TC	TOP OF CURB
FG	FINISH GRADE
FF	FINISH FLOOR
TOF	TOP OF FOOTING
SF — S —	SILT FENCE
VTC	VEHICLE TRACKING CONTROL
CWA	CONCRETE WASH-OUT BASIN
IP	INLET PROTECTION

1" = 20'
0 10 20 40
Scale in Feet

DESIGN ENGINEER'S STATEMENT

THIS GRADING AND EROSION CONTROL PLAN WAS PREPARED UNDER MY DIRECTION AND SUPERVISION AND IS CORRECT TO THE BEST OF MY KNOWLEDGE AND BELIEF. SAID PLAN HAS BEEN PREPARED ACCORDING TO THE CRITERIA ESTABLISHED BY THE COUNTY FOR GRADING AND EROSION CONTROL PLANS. I ACCEPT RESPONSIBILITY FOR ANY LIABILITY CAUSED BY NEGLIGENT ACTS, ERRORS OR OMISSIONS ON MY PART IN PREPARING THIS PLAN.

VIRGIL A. SANCHEZ, COLORADO P.E. #37160 DATE
FOR AND ON BEHALF OF M & S CIVIL CONSULTANTS, INC.

OWNER/DEVELOPER'S STATEMENT:

I, THE OWNER/DEVELOPER HAVE READ AND WILL COMPLY WITH ALL OF THE REQUIREMENTS SPECIFIED IN THESE DETAILED PLANS AND SPECIFICATIONS.

NAME: DATE

DBA: HAMMERS CONSTRUCTION

ADDRESS: 1411 WOOLSEY HEIGHTS COLORADO SPRINGS, 80915

EL PASO COUNTY:

COUNTY PLAN REVIEW IS PROVIDED ONLY FOR GENERAL CONFORMANCE WITH COUNTY DESIGN CRITERIA. THE COUNTY IS NOT RESPONSIBLE FOR THE ACCURACY AND ADEQUACY OF THE DESIGN, DIMENSIONS, AND/OR ELEVATIONS WHICH SHALL BE CONFIRMED AT THE JOB SITE. THE COUNTY THROUGH THE APPROVAL OF THIS DOCUMENT ASSUMES NO RESPONSIBILITY FOR COMPLETENESS AND/OR ACCURACY OF THIS DOCUMENT.

FILED IN ACCORDANCE WITH THE REQUIREMENTS OF THE EL PASO COUNTY LAND DEVELOPMENT CODE, DRAINAGE CRITERIA, AND ENGINEERING CRITERIA MANUAL AS AMENDED.

IN ACCORDANCE WITH ECM SECTION 1.12, THESE CONSTRUCTION DOCUMENTS WILL BE VALID FOR CONSTRUCTION FOR A PERIOD OF 2 YEARS FROM THE DATE SIGNED BY THE EL PASO COUNTY ENGINEER. IF CONSTRUCTION HAS NOT STARTED WITHIN THOSE 2 YEARS, THE PLANS WILL NEED TO BE RESUBMITTED FOR APPROVAL, INCLUDING PAYMENT OF REVIEW FEES AT THE PLANNING AND COMMUNITY DEVELOPMENT DIRECTOR'S DISCRETION.

JENNIFER IRVINE, P.E. DATE
COUNTY ENGINER / ECM ADMINISTRATOR

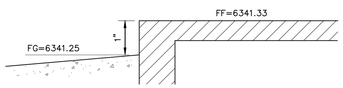

BUILDING FINISH FLOOR DETAIL

GRADING & EROSION CONTROL PLAN
CBP LOT 13
JOB NO. 44-028
DATE PREPARED: SEPT 16, 2018
DATE REVISED: NOVEMBER 5, 2018

EL PASO COUNTY FILE NO. PPR 18-044

CIVIL CONSULTANTS, INC.
20 BOULDER CRESCENT, SUITE 110
COLORADO SPRINGS, CO 80903
PHONE: 719.955.5485

CBP , LOT 13

EL PASO COUNTY, STATE OF COLORADO
GRADING & EROSION CONTROL PLAN

LOT 13 OF CLAREMONT BUSINESS PARK FIL. NO. 2

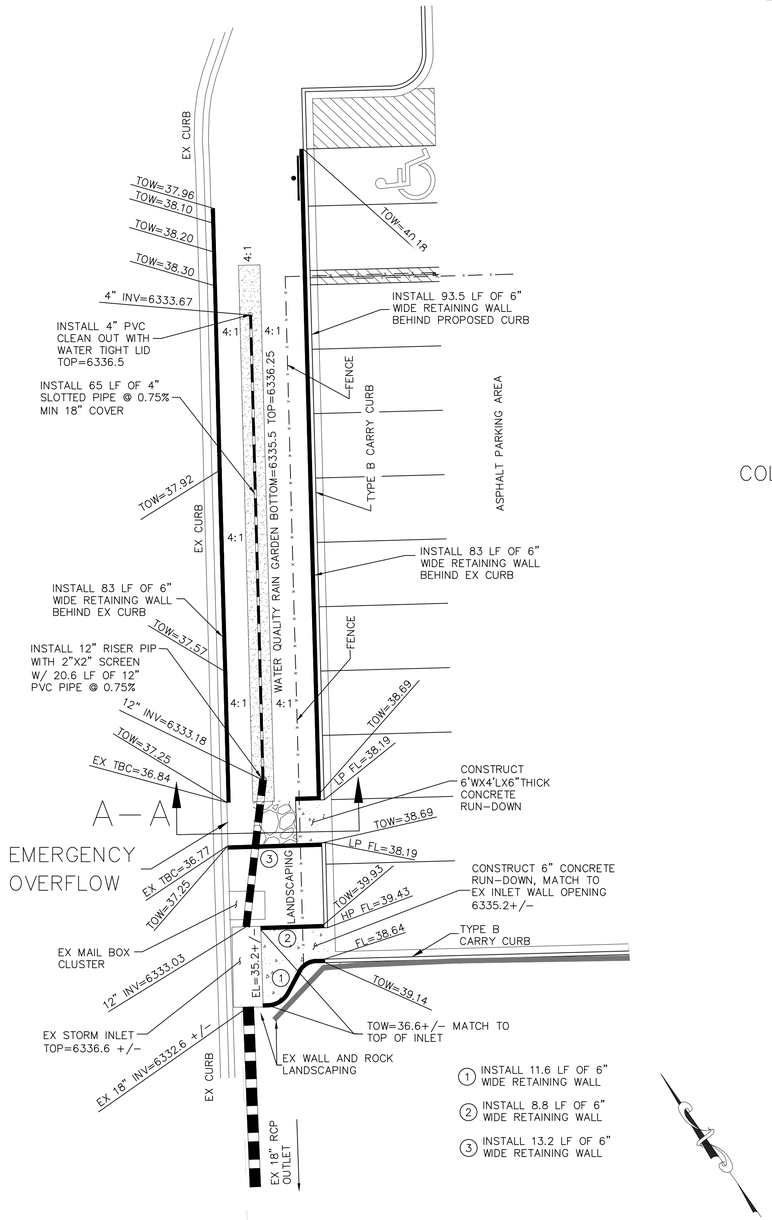

RAIN GARDEN & STORM WATER DETAIL

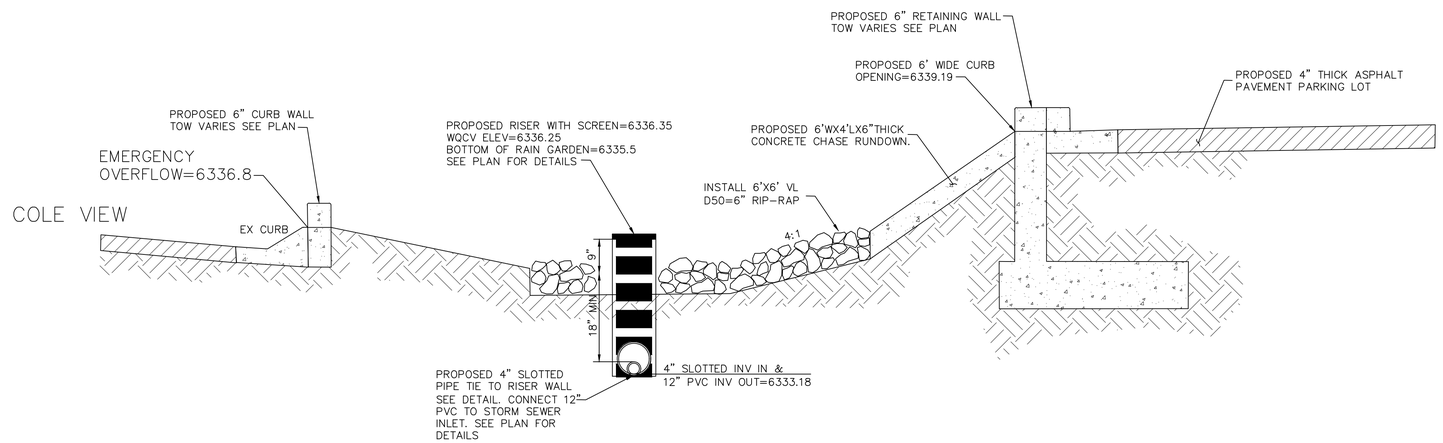

SECTION A–A W/ RISER DETAILS

NOT TO SCALE

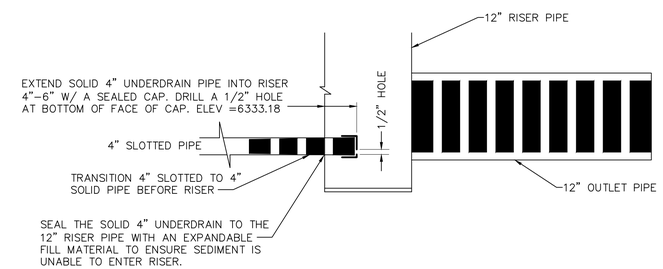

4" UNDERDRAIN/RISER DETAIL

1" = 10'

0 5 10 20
Scale in Feet

FOR BURIED UTILITY INFORMATION
48 HRS BEFORE YOU DIG
CALL 1–800–922–1987
FOR LOCATING & MARKING GAS, ELECTRIC, WATER & TELEPHONE LINES
WATER EMERGENCIES 520–0300

GRADING & EROSION CONTROL PLAN
CBP LOT 13
JOB NO. 44–028
DATE PREPARED: SEPT 16, 2018
DATE REVISED: NOVEMBER 5, 2018

EL PASO COUNTY FILE NO. PPR 18–044

M&S CIVIL CONSULTANTS, INC.
20 BOULDER CRESCENT, SUITE 110
COLORADO SPRINGS, CO 80903
PHONE: 719.955.5485

Concrete Washout Area (CWA) MM-1

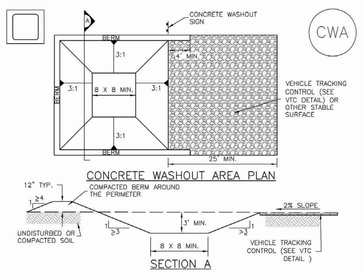

CWA–1. CONCRETE WASHOUT AREA

CWA INSTALLATION NOTES

1. SEE PLAN VIEW FOR:
   –CWA INSTALLATION LOCATION.

2. DO NOT LOCATE AN UNLINED CWA WITHIN 400' OF ANY NATURAL DRAINAGE PATHWAY OR WATERBODY. DO NOT LOCATE WITHIN 1,000' OF ANY WELLS OR DRINKING WATER SOURCES. IF SITE CONSTRAINTS MAKE THIS INFEASIBLE, OR IF HIGHLY PERMEABLE SOILS EXIST ON SITE, THE CWA MUST BE INSTALLED WITH AN IMPERMEABLE LINER (16 MIL MIN. THICKNESS) OR SURFACE STORAGE ALTERNATIVES USING PREFABRICATED CONCRETE WASHOUT DEVICES OR A LINED ABOVE GROUND STORAGE ARE SHOULD BE USED.

3. THE CWA SHALL BE INSTALLED PRIOR TO CONCRETE PLACEMENT ON SITE.

4. CWA SHALL INCLUDE A FLAT SUBSURFACE PIT THAT IS AT LEAST 8' BY 8' SLOPES LEADING OUT OF THE SUBSURFACE PIT SHALL BE 3:1 OR FLATTER. THE PIT SHALL BE AT LEAST 3' DEEP.

5. BERM SURROUNDING SIDES AND BACK OF THE CWA SHALL HAVE MINIMUM HEIGHT OF 1'.

6. VEHICLE TRACKING PAD SHALL BE SLOPED 2% TOWARDS THE CWA.

7. SIGNS SHALL BE PLACED AT THE CONSTRUCTION ENTRANCE, AT THE CWA, AND ELSEWHERE AS NECESSARY TO CLEARLY INDICATE THE LOCATION OF THE CWA TO OPERATORS OF CONCRETE TRUCKS AND PUMP RIGS.

8. USE EXCAVATED MATERIAL FOR PERIMETER BERM CONSTRUCTION.

Vehicle Tracking Control (VTC) SM-4

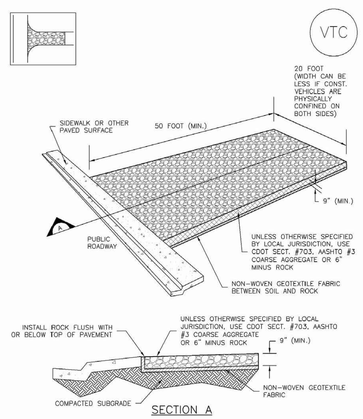

VTC–1. AGGREGATE VEHICLE TRACKING CONTROL

Silt Fence (SF) SC-1

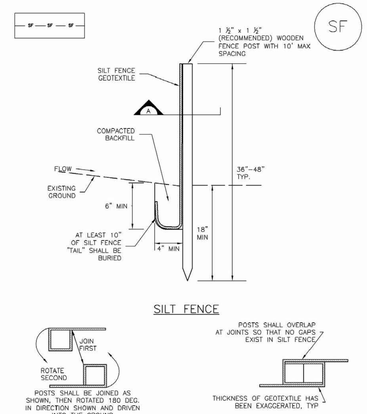

SF–1. SILT FENCE

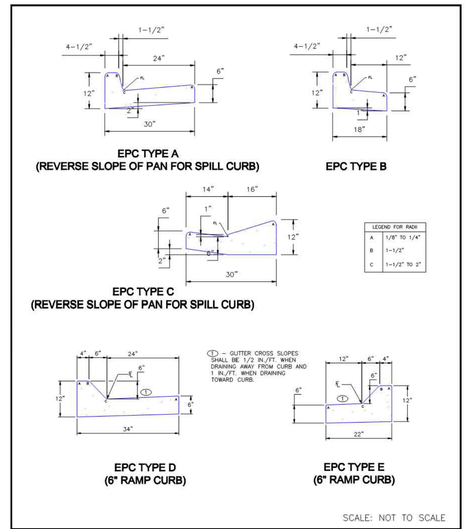

7/9/09 DATE APPROVED: André P. Brackin DEPARTMENT OF TRANSPORTATION	Typical Curb and Gutter Details Standard Drawing	El Paso Logo.jpg
	REVISION DATE: 7/7/11	FILE NAME: SD_2–20

EC-2 Temporary and Permanent Seeding (TS/PS)

Table TS/PS-2. Minimum Drill Seeding Rates for Perennial Grasses

Common[a] Name	Botanical Name	Growth Season[b]	Growth Form	Seeds/ Pound	Pounds of PLS/acre
Alakali Soil Seed Mix					
Alkali sacaton	*Sporobolus airoides*	Cool	Bunch	1,750,000	0.25
Basin wildrye	*Elymus cinereus*	Cool	Bunch	165,000	2.5
Sodar streambank wheatgrass	*Agropyron riparium 'Sodar'*	Cool	Sod	170,000	2.5
Jose tall wheatgrass	*Agropyron elongatum 'Jose'*	Cool	Bunch	79,000	7.0
Arriba western wheatgrass	*Agropyron smithii 'Arriba'*	Cool	Sod	110,000	5.5
Total					**17.75**
Fertile Loamy Soil Seed Mix					
Ephriam crested wheatgrass	*Agropyron cristatum 'Ephriam'*	Cool	Sod	175,000	2.0
Dural hard fescue	*Festuca ovina 'duriuscula'*	Cool	Bunch	565,000	1.0
Lincoln smooth brome	*Bromus inermis leyss 'Lincoln'*	Cool	Sod	130,000	3.0
Sodar streambank wheatgrass	*Agropyron riparium 'Sodar'*	Cool	Sod	170,000	2.5
Arriba western wheatgrass	*Agropyron smithii 'Arriba'*	Cool	Sod	110,000	7.0
Total					**15.5**
High Water Table Soil Seed Mix					
Meadow foxtail	*Alopecurus pratensis*	Cool	Sod	900,000	0.5
Redtop	*Agrostis alba*	Warm	Open sod	5,000,000	0.25
Reed canarygrass	*Phalaris arundinacea*	Cool	Sod	68,000	0.5
Lincoln smooth brome	*Bromus inermis leyss 'Lincoln'*	Cool	Sod	130,000	3.0
Pathfinder switchgrass	*Panicum virgatum 'Pathfinder'*	Warm	Sod	389,000	1.0
Alkar tall wheatgrass	*Agropyron elongatum 'Alkar'*	Cool	Bunch	79,000	5.5
Total					**10.75**
Transition Turf Seed Mix[c]					
Ruebens Canadian bluegrass	*Poa compressa 'Ruebens'*	Cool	Sod	2,500,000	0.5
Dural hard fescue	*Festuca ovina 'duriuscula'*	Cool	Bunch	565,000	1.0
Citation perennial ryegrass	*Lolium perenne 'Citation'*	Cool	Sod	247,000	3.0
Lincoln smooth brome	*Bromus inermis leyss 'Lincoln'*	Cool	Sod	130,000	3.0
Total					**7.5**

Temporary and Permanent Seeding (TS/PS) EC-2

Table TS/PS-2. Minimum Drill Seeding Rates for Perennial Grasses (cont.)

Common Name	Botanical Name	Growth Season[b]	Growth Form	Seeds/ Pound	Pounds of PLS/acre
Sandy Soil Seed Mix					
Blue grama	*Bouteloua gracilis*	Warm	Sod-forming bunchgrass	825,000	0.5
Camper little bluestem	*Schizachyrium scoparium 'Camper'*	Warm	Bunch	240,000	1.0
Prairie sandreed	*Calamovilfa longifolia*	Warm	Open sod	274,000	1.0
Sand dropseed	*Sporobolus cryptandrus*	Cool	Bunch	5,298,000	0.25
Vaughn sideoats grama	*Bouteloua curtipendula 'Vaughn'*	Warm	Sod	191,000	2.0
Arriba western wheatgrass	*Agropyron smithii 'Arriba'*	Cool	Sod	110,000	5.5
Total					**10.25**
Heavy Clay, Rocky Foothill Seed Mix					
Ephriam crested wheatgrass[d]	*Agropyron cristatum 'Ephriam'*	Cool	Sod	175,000	1.5
Oahe Intermediate wheatgrass	*Agropyron intermedium 'Oahe'*	Cool	Sod	115,000	5.5
Vaughn sideoats grama[e]	*Bouteloua curtipendula 'Vaughn'*	Warm	Sod	191,000	2.0
Lincoln smooth brome	*Bromus inermis leyss 'Lincoln'*	Cool	Sod	130,000	3.0
Arriba western wheatgrass	*Agropyron smithii 'Arriba'*	Cool	Sod	110,000	5.5
Total					**17.5**

[a] All of the above seeding mixes and rates are based on drill seeding followed by crimped straw mulch. These rates should be doubled if seed is broadcast and should be increased by 50 percent if the seeding is done using a Brillion Drill or is applied through hydraulic seeding. Hydraulic seeding may be substituted for drilling only where slopes are steeper than 3:1. If hydraulic seeding is used, hydraulic mulching should be done as a separate operation.

[b] See Table TS/PS-3 for seeding dates.

[c] If site is to be irrigated, the transition turf seed rates should be doubled.

[d] Crested wheatgrass should not be used on slopes steeper than 6H to 1V.

[e] Can substitute 0.5 lbs PLS of blue grama for the 2.0 lbs PLS of Vaughn sideoats grama.

SC-6 Inlet Protection (IP)

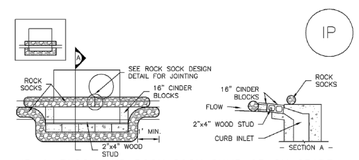

IP–1. BLOCK AND ROCK SOCK SUMP OR ON GRADE INLET PROTECTION

BLOCK AND CURB SOCK INLET PROTECTION INSTALLATION NOTES

1. SEE ROCK SOCK DESIGN DETAIL FOR INSTALLATION REQUIREMENTS.

2. CONCRETE "CINDER" BLOCKS SHALL BE LAID ON THEIR SIDES AROUND THE INLET IN A SINGLE ROW, ABUTTING ONE ANOTHER WITH THE OPEN END FACING AWAY FROM THE CURB.

3. GRAVEL BAGS SHALL BE PLACED AROUND CONCRETE BLOCKS, CLOSELY ABUTTING ONE ANOTHER AND JOINTED TOGETHER IN ACCORDANCE WITH ROCK SOCK DESIGN DETAIL.

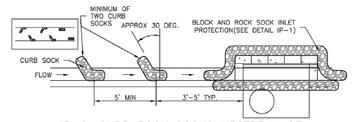

IP–2. CURB ROCK SOCKS UPSTREAM OF INLET PROTECTION

CURB ROCK SOCK INLET PROTECTION INSTALLATION NOTES

1. SEE ROCK SOCK DESIGN DETAIL INSTALLATION REQUIREMENTS.

2. PLACEMENT OF THE SOCK SHALL BE APPROXIMATELY 30 DEGREES FROM PERPENDICULAR IN THE OPPOSITE DIRECTION OF FLOW.

3. SOCKS ARE TO BE FLUSH WITH THE CURB AND SPACED A MINIMUM OF 5 FEET APART.

4. AT LEAST TWO CURB SOCKS IN SERIES ARE REQUIRED UPSTREAM OF ON–GRADE INLETS.

EL PASO COUNTY FILE NO. PPR 18–044

GRADING & EROSION CONTROL PLAN DETAILS
CBP LOT 13
JOB NO. 44–028
DATE PREPARED: SEPT 16, 2018
DATE REVISED: NOVEMBER 5, 2018

M&S CIVIL CONSULTANTS, INC.
20 BOULDER CRESCENT, SUITE 110
COLORADO SPRINGS, CO 80903
PHONE: 719.955.5485

Designing for Maintenance

Recommended maintenance practices for all BMPs are in Chapter 6 of this manual. During design, consider the following to ensure ease of maintenance over the long-term:

- Do not put a filter sock on the underdrain. This is not necessary and can cause the underdrain to clog.
- The best surface cover for a rain garden is full vegetation. Use rock mulch sparingly within the rain garden because rock mulch limits infiltration and is more difficult to maintain. Wood mulch handles sediment build-up better than rock mulch; however, wood mulch floats and may clog the overflow depending on the configuration of the outlet or settle unevenly. Some municipalities may not allow wood mulch for this reason.
- Consider all potential maintenance requirements such as mowing (if applicable) and replacement of the growing medium. Consider the method and equipment for each task required. For example, in a large rain garden where the use of hand tools is not feasible, does the shape and configuration of the rain garden allow for removal of the growing medium using a backhoe?
- Provide pre-treatment when it will reduce the extent and frequency of maintenance necessary to maintain function over the life of the BMP. For example, if the tributary is larger than one acre, prone to debris or the use of sand for ice control, consider a small forebay.
- Make the rain garden as shallow as possible. Increasing the depth unnecessarily can create erosive side slopes and complicate maintenance. Shallow rain gardens are also more attractive.
- Design and adjust the irrigation system (temporary or permanent) to provide appropriate water for the establishment and maintenance of selected vegetation.

Is Pretreatment Needed?

Designing the inflow gutter to the rain garden at a minimal slope of 0.5% can facilitate sediment and debris deposition prior to flows entering the BMP. Be aware, this will reduce maintenance of the BMP, but may require more frequent sweeping of the gutter to ensure that the sediment does not impede flow into the rain garden.

Design Procedure and Criteria

1. **Subsurface Exploration and Determination of a No-Infiltration, Partial Infiltration, or Full Infiltration Section**: Infiltration BMPs can have three basic types of sections. The appropriate section will depend on land use and activities, proximity to adjacent structures and soil characteristics. Sections of each installation type are shown in Figure B-1.
   - **No-Infiltration Section**: This section includes an underdrain and an impermeable liner that prevents infiltration of stormwater into the subgrade soils. Consider using this section when any of the following conditions exist:
     - The site is a stormwater hotspot and infiltration could result in contamination of groundwater.
     - The site is located over contaminated soils and infiltration could mobilize these contaminants.
     - The facility is located over potentially expansive soils or bedrock that could swell due to infiltration and potentially damage adjacent structures (e.g., building foundation or pavement).
   - **Partial Infiltration Section**: This section does not include an impermeable liner, and allows some infiltration. Stormwater that does not infiltrate is collected and removed by an underdrain

system.
   - **Full Infiltration Section**: This section is designed to infiltrate the water stored in the basin into the subgrade below. UDFCD recommends a minimum infiltration rate of 2 times the rate needed to drain the WQCV over 12 hours. A conservative design could utilize the partial infiltration section with the addition of a valve at the underdrain outlet. In the event that infiltration does not remain adequate following construction, the valve could be opened and allow this section to operate as a partial infiltration section.

A geotechnical engineer should scope and perform a subsurface study. Typical geotechnical investigation needed to select and design the section includes:

- Prior to exploration review geologic and geotechnical information to assess near-surface soil, bedrock and groundwater conditions that may be encountered and anticipated ranges of infiltration rate for those materials. For example, if the facility is located adjacent to a structure and the site is located in a general area of known shallow, potentially expansive bedrock, a no-infiltration section will likely be required. It is also possible that this BMP may be infeasible, even with a liner, if there is a significant potential for damage to the adjacent structures (e.g., areas of dipping bedrock).
- Drill exploratory borings or exploratory pits to characterize subsurface conditions beneath the subgrade and develop requirements for subgrade preparation. Drill at least one boring or pit for every 40,000 ft^2, and at least two borings or pits for sites between 10,000 ft^2 and 40,000 ft^2. The boring or pit should extend at least 5 feet below the bottom of the base, and at least 20 feet in areas where there is a potential of encountering potentially expansive soils or bedrock. More borings or pits at various depths may be required by the geotechnical engineer in areas where soil types may change, in low-lying areas where subsurface drainage may collect, or where the water table is likely within 8 feet below the planned bottom of the base or top of subgrade. Installation of temporary monitoring wells in selected borings or pits for monitoring groundwater levels over time should be considered where shallow groundwater is encountered.
- Perform laboratory tests on samples obtained from the borings or pits to initially characterize the subgrade, evaluate the possible section type, and to assess subgrade conditions for supporting traffic loads. Consider the following tests: moisture content (ASTM D 2216); dry density (ASTM D 2936); Atterberg limits (ASTM D 4318); gradation (ASTM D 6913); swell-consolidation (ASTM D 4546); subgrade support testing (R-value, CBR or unconfined compressive strength); and hydraulic conductivity. A geotechnical engineer should determine the appropriate test method based on the soil type.
- For sites where a full infiltration section may be feasible, perform on-site infiltration tests using a double-ring infiltrometer (ASTM D 3385). Perform at least one test for every 160,000 ft^2 and at least two tests for sites between 40,000 ft^2 and 160,000 ft^2. The tests should be located near completed borings or pits so the test results and subsurface conditions encountered in the borings can be compared, and at least one test should be located near the boring or pit showing the most unfavorable infiltration condition. The test should be performed at the planned top of subgrade underlying the growing media.
- Be aware that actual infiltration rates are highly variable dependent on soil type, density and moisture content and degree of compaction as well as other environmental and construction influences. Actual rates can differ an order of magnitude or more from those indicated by infiltration or permeability testing. Select the type of section based on careful assessment of the subsurface exploration and testing data.

The following steps outline the design procedure and criteria, with Figure B-1 providing a corresponding cross-section.

2. **Basin Storage Volume**: Provide a storage volume based on a 12-hour drain time.

   Find the required WQCV (watershed inches of runoff). Using the imperviousness of the tributary area (or effective imperviousness where LID elements are used upstream), use Figure 3-2 located in Chapter 3 of this manual to determine the WQCV based on a 12-hour drain time.

   Calculate the design volume as follows:

   $$V = \left[\frac{WQCV}{12}\right]A \qquad \text{Equation B-1}$$

   Where:

   V = design volume (ft^3)

   A = area of watershed tributary to the rain garden (ft^2)

3. **Basin Geometry:** UDFCD recommends a maximum WQCV ponding depth of 12 inches to maintain vegetation properly. Provide an inlet or other means of overflow at this elevation. Depending on the type of vegetation planted, a greater depth may be utilized to detain larger (more infrequent) events. The bottom surface of the rain garden, also referred to here as the filter area, should be flat. Sediment will reside on the filter area of the rain garden; therefore, if the filter area is too small, it may clog prematurely. If the filter area is not flat, the lowest area of the filter is more likely to clog as it will have a higher sediment loading. Increasing the filter area will reduce clogging and decrease the frequency of maintenance. Equation B-2 provides a minimum filter area allowing for some of the volume to be stored beyond the area of the filter (i.e., above the sideslopes of the rain garden).

   Note that the total surcharge volume provided by the design must also equal or exceed the design volume. Where needed to meet the the required volume, also consider the porosity of the media at 14 percent. Use vertical walls or slope the sides of the basin to achieve the required volume. Sideslopes should be no steeper than 4:1 (horizontal:vertical).

   $$A_F = 0.02AI \qquad \text{Equation B-2}$$

   Where:

   A_F = minimum (flat) filter area (ft^2)

   A = area tributary to the rain garden (ft^2)

   I = imperviousness of area tributary to the rain garden (percent expressed as a decimal)

4. **Growing Medium:** Provide a minimum of 18 inches of growing medium to enable establishment of the roots of the vegetation (see Figure B-1). A previous version of this manual specified a mixture consisting of 85% coarse sand and a 15% compost shredded paper mixture (by volume). Based on field monitoring of this medium, compost was removed to reduce export of nutrients and fines and silts were added to both benefit the vegetation and increase capture of metals in stormwater.

Table B-1 specifies the growing media as well as other materials discussed in this Fact Sheet. Growing media is engineered media that requires a high level of quality control and must almost always be imported. Obtaining a particle size distribution and nutrient analysis is the only way to ensure that the media is acceptable. UDFCD has identified placement of media not meeting the specification as the most frequent cause of failure. Sample the media after delivery and prior to placement or obtain a sample from the supplier in advance of delivery and placement and have this analyzed prior to delivery.

Other Rain Garden Growing Medium Amendments

The specified growing medium was designed for filtration ability, clogging characteristics, and vegetative health. It is important to preserve the function provided by the rain garden growing medium when considering additional materials for incorporation into the growing medium or into the standard section shown in Figure B-1. When desired, amendments may be included to improve water quality or to benefit vegetative health as long as they do not add nutrients, pollutants, or modify the infiltration rate. For example, a number of products, including steel wool, capture and retain dissolved phosphorus (Erickson 2009). When phosphorus is a target pollutant, proprietary materials with similar characteristics may be considered. Do not include amendments such as top soil, sandy loam, and compost.

Table B-1. Material specification for bioretention/rain garden facilities

Material		Specification	Sampling	Testing	Notes
Elevation Sideslope (Wall - Vertical)	Bioretention soil	Sand Content: 85-90% sand (0.05-2.0 mm diameter) Silt + Clay Content: 5-10% silt and clay (<0.05 diameter) Organic Content: 2-5% organic matter, non-decomposed fibrous material pH: 6.5 - 7.5 Soluble Salts: < 500 ppm Phosphorus: 15 ppm Nitrate-N: 8 ppm Ammonium-N: 8 ppm Soluble Heavy Metals: Not Detrimental	Particle size distribution and hydraulic conductivity required	Perennial conditions: Hydraulic Conductivity Design and Field Tests shall be performed to ensure that clogging or breakdown of the media will not occur. Consult UDFCD for more information and specifications. Pre and post construction.	Percolating water must remain aerobic
Elevation Sideslope (Wall - Vertical)	Bioretention aggregate	1 to 2 in washed round River rock (Per weight of growing media)			Washed to remove fines, fill void space with growing media
Underdrain Pipe	Underdrain aggregate	CDOT Class C Filter material or CDOT Class B or C as specified	Mass Percent Passing (Sieve Size) (Sieve Size)		
			Sieve Size	Class B	Class C
			1 in (25.4 mm)	100	100
			3/8 in (9.5 mm)	75-100	75-100
			#4 (4.75 mm)	50-85	50-85
			#8 (2.36 mm)	40-75	40-75
			#16 (1.18 mm)	30-60	30-60
			#30 (0.60 mm)	20-40	20-40
			#50 (0.30 mm)	5-20	5-20
			#100 (0.15 mm)	0-10	0-10
			#200 (0.075 mm)	0-2	0-2
Underdrain Pipe		Pipe diameter and type	Minimum open area (per foot)	Minimum open area (per foot)	Required
		4-inch perforated PVC	0.192	1.92 in²	
		6-inch perforated PVC	0.192	1.92 in²	
Impermeable Liner		Thickness: 16 mil (0.016 in) Weight: 1 lb/sq yd Tensile Strength: 1 lb/in Puncture Strength: 2 lb Bursting Strength: 4 lb/in Tear Strength: 1 lb Ultraviolet Resistance: 70% Low temperature resistance: -20 °F Seam Strength: 3 lb/in Expansion and contraction: 2% Dimensional Stability: 2% Toxicity: Non-toxic Chemical Resistance: Resistant to acids and alkalis	Test methods: ASTM D 751 ASTM D 751 ASTM D 751 ASTM D 751 ASTM D 751 ASTM D 751 ASTM D 751 ASTM D 751 ASTM D 751 ASTM D 751 ASTM D 751 ASTM D 751 ASTM D 751 ASTM D 751		Required

5. **Underdrain System**: When using an underdrain system, provide a control orifice sized to drain the design volume in 12 hours or more (see Equation B-3). Use a minimum orifice size of 3/8 inch to avoid clogging. This will provide detention and slow release of the WQCV, providing water quality benefits and reducing impacts to downstream channels. Space underdrain pipes a maximum of 20 feet on center. Provide cleanouts to enable maintenance of the underdrain. Cleanouts can also be used to conduct an inspection (by camera) of the underdrain system to ensure that the pipe was not crushed or disconnected during construction.

Calculate the diameter of the orifice for a 12-hour drain time using Equation B-3 (Use a minimum orifice size of 3/8 inch to avoid clogging.):

$$D_{12\text{ hour drain time}} = \sqrt{\frac{V}{1414\,y^{0.41}}} \qquad \text{Equation B-3}$$

Where:

D = orifice diameter (in)

y = distance from the lowest elevation of the storage volume (i.e., surface of the filter) to the center of the orifice (ft)

V = volume (WQCV or the portion of the WQCV in the rain garden) to drain in 12 hours (ft^3)

In previous versions of this manual, UDFCD recommended that the underdrain be placed in an aggregate layer and that a geotextile (separator fabric) be placed between this aggregate and the growing medium. This version of the manual replaces that section with materials that, when used together, eliminate the need for a separator fabric.

The underdrain system should be placed within an 6-inch-thick section of CDOT Class B or Class C filter material meeting the gradation in Table B-1. Use slotted pipe that meets the slot dimensions provided in Table B-3.

Table B-3. Native seed mix for rain gardens

Common Name	Scientific Name	Variety	PLS[2] lbs per Acre	Ounces per Acre
Sand bluestem	Andropogon hallii	Garden	3.5	
Sideoats grama	Bouteloua curtipendula	Butte	3	
Prairie sandreed	Calamovilfa longifolia	Goshen	3	
Indian ricegrass	Oryzopsis hymenoides	Paloma	3	
Switchgrass	Panicum virgatum	Blackwell	4	
Western wheatgrass	Pascopyrum smithii	Ariba	3	
Little bluestem	Schizachyrium scoparium	Patura	3	
Alkali sacaton	Sporobolus airoides		3	
Sand dropseed	Sporobolus cryptandrus		3	
Pasture sage[1]	Artemisia frigida			2
Blue aster[1]	Aster laevis			4
Blanket flower[1]	Gaillardia aristata			8
Prairie coneflower[1]	Ratibida columnifera			4
Purple prairieclover[1]	Dalea (Petalostemum) purpurea			4
Sub-Totals:			27.5	22
Total lbs per acre:			**28.9**	

[1] Wildflower seed (optional) for a more diverse and natural look.
[2] PLS = Pure Live Seed.

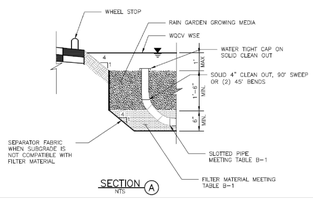

EL PASO COUNTY FILE NO. PPR 18-044

GRADING & EROSION CONTROL PLAN DETAILS
CBP LOT 13
JOB NO. 44-028
DATE PREPARED: SEPT 16, 2018
DATE REVISED: NOVEMBER 5, 2018

M&S CIVIL CONSULTANTS, INC.
20 BOULDER CRESCENT, SUITE 110
COLORADO SPRINGS, CO 80903
PHONE: 719.955.5485

SHEET 4 OF 4