CORE
ENGINEERING GROUP

August 13, 2024

El Paso County Planning and Community Development
2880 International Circle, Suite 110
Colorado Springs, CO 80910

RE: Ridge at Lorson Ranch Filing No. 2 (SF 225)
Certification Letter

Dear El Paso County PCD,

Based upon information gathered from as-built surveys and periodic visits to the project, Core Engineering Group is of the opinion that the subdivision improvements have been constructed in general conformance with the approved design plans as filed with El Paso County.

The site and adjacent properties (as affected by work performed under the County permit) appear to be stable with respect to settlement and subsidence, sloughing of cut and fill slopes, revegetation or other ground cover, and the improvements (public improvements, common development improvements, site grading and paving) visually appear to meet or exceed the minimum design requirements.

The sanitary and watermain located in the public ROW has also been completed in accordance with Widefield Water and Sanitation Districts criteria.

In addition, Core Engineering Group has verified in a separate certification letter dated May 4, 2023 that Extended Detention Basin/WQ Ponds C2.2 and C4 which serve this site, meet the volume and elevation requirements and are constructed in general compliance with the approved construction plans.

Based on information gathered during construction and post-construction, Core Engineering Group is of the opinion that the public streets, storm sewer, and Detention Ponds C2.2, & C4 have been constructed in general accordance with the approved construction documents.

Sincerely,
Core Engineering Group, LLC

COLORADO REGISTERED
RICHARD LEO SCHINDLER
33997
8-13-2024
PROFESSIONAL ENGINEER

Richard L. Schindler, P.E. 33997

Attachments: Pond Certification Letter

15004 1st Avenue S. • Burnsville, MN 55306
719.659.7800 (ph)

CORE
ENGINEERING GROUP

May 4, 2023

El Paso County
Planning & Community Development
2880 International Circle, Suite 110
Colorado Springs, CO 80910

Attn.: Project Manager

RE: The Hills at Lorson Ranch Filing No. 1 (SF 21-010)
Private Detention/Stormwater Quality Ponds C1, C2.1, C2.2, C2.3, C3, & C4
As-built Certification

Dear Project Manager:

Per the approved construction drawings for The Hills at Lorson Ranch Filing No.1 (SF 21-010), improvements were made to construct six full spectrum detention ponds including water quality facility in compliance with the current El Paso County Drainage Criteria and the approved Final Drainage Report for this project.

Based upon this information and periodic site visits by field personnel to the project during significant/key phases of the stormwater BMP installation, Core Engineering Group, LLC is of the opinion that the detention and stormwater BMPs have been constructed in general compliance with the approved design plans and specifications as filed with El Paso County. The Pond C2.2 ratio peak outflow to predeveloped did exceed allowable limits for the 10-year (ratio=1.2, 25cfs) and 25-year (ratio=1.1, 40.3cfs) flows. Pond C2.2 was designed with a downstream oversized storm sewer overflow conveyance system in Fontaine Boulevard for the 100-year storm event and a modified Type D outlet structure to capture emergency overflows. The exceeded outflows will not negatively impact the oversized downstream storm sewer system for the 10-year and 25-year storms. Pond C2.2 flows downstream (in series) into existing Pond C5 located at the East Tributary of Jimmy Camp Creek. Existing Pond C5 is a large pond and the Pond C2.2 larger outflows for the 10-year and 25-year will not have any negative impact on Existing Pond C5 which flows directly into the East Tributary of Jimmy Camp Creek.

Statement Of Engineer of Record

To the best of my knowledge, information and belief, for the referenced project above, the improvements have been constructed in general compliance with the approved design plans and specifications as filed with El Paso County.

COLORADO REGISTERED PROFESSIONAL ENGINEER
No. 33997
5/4/2023

Richard L. Schindler
Colorado P.E. No.33997
For and on behalf of Core Engineering Group, LLC

Attachments: Pond C1, C2.1, C2.2, C2.3, C3, & C4 As-Built Drawings

DETENTION BASIN OUTLET STRUCTURE DESIGN

MHFD-Detention, Version 4.02 (February 2020)

Project: **The Hills at Lorson Ranch**

Basin ID: **Pond C1-asbuilt**

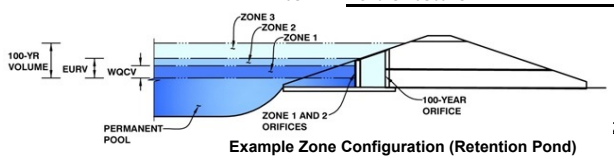

Example Zone Configuration (Retention Pond)

	Estimated Stage (ft)	Estimated Volume (ac-ft)	Outlet Type
Zone 1 (WQCV)	3.70	1.240	Orifice Plate
Zone 2 (EURV)	5.76	2.759	Rectangular Orifice
Z3 (100+1/2WQCV)	7.86	3.393	Weir&Pipe (Restrict)
Total (all zones)		7.392	

User Input: Orifice at Underdrain Outlet (typically used to drain WQCV in a Filtration BMP)

			Calculated Parameters for Underdrain		
Underdrain Orifice Invert Depth =		ft (distance below the filtration media surface)	Underdrain Orifice Area =		ft^2
Underdrain Orifice Diameter =		inches	Underdrain Orifice Centroid =		feet

User Input: Orifice Plate with one or more orifices or Elliptical Slot Weir (typically used to drain WQCV and/or EURV in a sedimentation BMP)

			Calculated Parameters for Plate		
Invert of Lowest Orifice =	0.00	ft (relative to basin bottom at Stage = 0 ft)	WQ Orifice Area per Row =	2.222E-02	ft^2
Depth at top of Zone using Orifice Plate =	3.70	ft (relative to basin bottom at Stage = 0 ft)	Elliptical Half-Width =	N/A	feet
Orifice Plate: Orifice Vertical Spacing =	N/A	inches	Elliptical Slot Centroid =	N/A	feet
Orifice Plate: Orifice Area per Row =	3.20	sq. inches (diameter = 2 inches)	Elliptical Slot Area =	N/A	ft^2

User Input: Stage and Total Area of Each Orifice Row (numbered from lowest to highest)

	Row 1 (required)	Row 2 (optional)	Row 3 (optional)	Row 4 (optional)	Row 5 (optional)	Row 6 (optional)	Row 7 (optional)	Row 8 (optional)
Stage of Orifice Centroid (ft)	0.00	1.20	2.45					
Orifice Area (sq. inches)	3.20	3.20	3.20					

	Row 9 (optional)	Row 10 (optional)	Row 11 (optional)	Row 12 (optional)	Row 13 (optional)	Row 14 (optional)	Row 15 (optional)	Row 16 (optional)
Stage of Orifice Centroid (ft)								
Orifice Area (sq. inches)								

User Input: Vertical Orifice (Circular or Rectangular)

	Zone 2 Rectangular	Not Selected		Calculated Parameters for Vertical Orifi	Zone 2 Rectangular	Not Selected
Invert of Vertical Orifice =	3.70	N/A	ft (relative to basin bottom at Stage = 0 ft)	Vertical Orifice Area =	0.82	N/A
Depth at top of Zone using Vertical Orifice =	5.76	N/A	ft (relative to basin bottom at Stage = 0 ft)	Vertical Orifice Centroid =	0.25	N/A
Vertical Orifice Height =	6.00	N/A	inches			
Vertical Orifice Width =	19.75		inches			

User Input: Overflow Weir (Dropbox with Flat or Sloped Grate and Outlet Pipe OR Rectangular/Trapezoidal Weir (and No Outlet Pipe)

	Zone 3 Weir	Not Selected		Calculated Parameters for Overflow We	Zone 3 Weir	Not Selected
Overflow Weir Front Edge Height, Ho =	6.23	N/A	ft (relative to basin bottom at Stage = 0 ft)	Height of Grate Upper Edge, H_t =	6.23	N/A
Overflow Weir Front Edge Length =	5.66	N/A	feet	Overflow Weir Slope Length =	3.00	N/A
Overflow Weir Grate Slope =	0.00	N/A	H:V	Grate Open Area / 100-yr Orifice Area =	9.50	N/A
Horiz. Length of Weir Sides =	3.00	N/A	feet	Overflow Grate Open Area w/o Debris =	11.89	N/A
Overflow Grate Open Area % =	70%	N/A	%, grate open area/total area	Overflow Grate Open Area w/ Debris =	5.94	N/A
Debris Clogging % =	50%	N/A	%			

User Input: Outlet Pipe w/ Flow Restriction Plate (Circular Orifice, Restrictor Plate, or Rectangular Orifice)

	Zone 3 Restrictor	Not Selected		Calculated Parameters for Outlet Pipe w/ Flow Restriction Pla	Zone 3 Restrictor	Not Selected
Depth to Invert of Outlet Pipe =	0.00	N/A	ft (distance below basin bottom at Stage = 0 ft)	Outlet Orifice Area =	1.25	N/A
Outlet Pipe Diameter =	18.00	N/A	inches	Outlet Orifice Centroid =	0.56	N/A
Restrictor Plate Height Above Pipe Invert =	12.00		inches	Half-Central Angle of Restrictor Plate on Pipe =	1.91	N/A

User Input: Emergency Spillway (Rectangular or Trapezoidal)

			Calculated Parameters for Spillway		
Spillway Invert Stage=	10.06	ft (relative to basin bottom at Stage = 0 ft)	Spillway Design Flow Depth=	1.31	feet
Spillway Crest Length =	28.00	feet	Stage at Top of Freeboard =	12.53	feet
Spillway End Slopes =	4.00	H:V	Basin Area at Top of Freeboard =	2.28	acres
Freeboard above Max Water Surface =	1.16	feet	Basin Volume at Top of Freeboard =	16.84	acre-ft

micropool = 0 = 5743.35

Routed Hydrograph Results

The user can override the default CUHP hydrographs and runoff volumes by entering new values in the Inflow Hydrographs table (Columns W through AF).

Design Storm Return Period =	WQCV	EURV	2 Year	5 Year	10 Year	25 Year	50 Year	100 Year
One-Hour Rainfall Depth (in) =	N/A	N/A	1.19	1.50	1.75	2.00	2.25	2.52
CUHP Runoff Volume (acre-ft) =	1.240	3.999	3.772	5.294	6.615	8.338	9.762	11.547
Inflow Hydrograph Volume (acre-ft) =	N/A	N/A	3.772	5.294	6.615	8.338	9.762	11.547
CUHP Predevelopment Peak Q (cfs) =	N/A	N/A	4.8	13.7	21.2	39.0	49.1	63.3
OPTIONAL Override Predevelopment Peak Q (cfs) =	N/A	N/A						
Predevelopment Unit Peak Flow, q (cfs/acre) =	N/A	N/A	0.07	0.20	0.31	0.58	0.73	0.94
Peak Inflow Q (cfs) =	N/A	N/A	45.6	64.4	78.4	105.4	123.5	145.4
Peak Outflow Q (cfs) =	0.5	6.0	5.0	6.4	14.6	15.7	16.5	17.5
Ratio Peak Outflow to Predevelopment Q =	N/A	N/A	N/A	0.5	0.7	0.4	0.3	0.3
Structure Controlling Flow =	Vertical Orifice 1	Vertical Orifice 1	Vertical Orifice 1	Vertical Orifice 1	Outlet Plate 1	Outlet Plate 1	Outlet Plate 1	Outlet Plate 1
Max Velocity through Grate 1 (fps) =	N/A	N/A	N/A	N/A	0.6	0.6	0.6	0.6
Max Velocity through Grate 2 (fps) =	N/A	N/A	N/A	N/A	N/A	N/A	N/A	N/A
Time to Drain 97% of Inflow Volume (hours) =	39	48	49	50	49	48	47	46
Time to Drain 99% of Inflow Volume (hours) =	**41**	52	53	55	55	55	56	56
Maximum Ponding Depth (ft) =	3.70	5.76	5.15	6.02	6.57	7.37	8.06	8.95
Area at Maximum Ponding Depth (acres) =	1.10	1.50	1.42	1.53	1.59	1.68	1.76	1.87
Maximum Volume Stored (acre-ft) =	1.248	4.005	3.115	4.398	5.238	6.545	7.732	9.348

DETENTION BASIN STAGE-STORAGE TABLE BUILDER

MHFD-Detention, Version 4.02 (February 2020)

Project: **The Hills at Lorson Ranch**

Basin ID: **Pond C1-asbuilt**

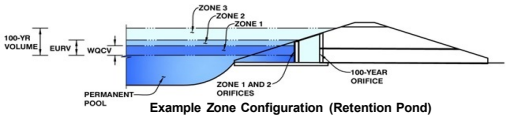

Example Zone Configuration (Retention Pond)

Watershed Information

Selected BMP Type =	**EDB**	
Watershed Area =	67.50	acres
Watershed Length =	4,800	ft
Watershed Length to Centroid =	2,100	ft
Watershed Slope =	0.040	ft/ft
Watershed Imperviousness =	55.00%	percent
Percentage Hydrologic Soil Group A =	0.0%	percent
Percentage Hydrologic Soil Group B =	100.0%	percent
Percentage Hydrologic Soil Groups C/D =	0.0%	percent
Target WQCV Drain Time =	40.0	hours
Location for 1-hr Rainfall Depths =	User Input	

After providing required inputs above including 1-hour rainfall depths, click 'Run CUHP' to generate runoff hydrographs using the embedded Colorado Urban Hydrograph Procedure.

			Optional User Overrides	
Water Quality Capture Volume (WQCV) =	1.240	acre-feet		acre-feet
Excess Urban Runoff Volume (EURV) =	3.999	acre-feet		acre-feet
2-yr Runoff Volume (P1 = 1.19 in.) =	3.772	acre-feet	1.19	inches
5-yr Runoff Volume (P1 = 1.5 in.) =	5.294	acre-feet	1.50	inches
10-yr Runoff Volume (P1 = 1.75 in.) =	6.615	acre-feet	1.75	inches
25-yr Runoff Volume (P1 = 2 in.) =	8.338	acre-feet	2.00	inches
50-yr Runoff Volume (P1 = 2.25 in.) =	9.762	acre-feet	2.25	inches
100-yr Runoff Volume (P1 = 2.52 in.) =	11.547	acre-feet	2.52	inches
500-yr Runoff Volume (P1 = 3.14 in.) =	15.208	acre-feet		inches
Approximate 2-yr Detention Volume =	3.047	acre-feet		
Approximate 5-yr Detention Volume =	4.144	acre-feet		
Approximate 10-yr Detention Volume =	5.409	acre-feet		
Approximate 25-yr Detention Volume =	5.880	acre-feet		
Approximate 50-yr Detention Volume =	6.138	acre-feet		
Approximate 100-yr Detention Volume =	6.772	acre-feet		

Define Zones and Basin Geometry

Zone 1 Volume (WQCV) =	1.240	acre-feet
Zone 2 Volume (EURV - Zone 1) =	2.759	acre-feet
Zone 3 (100yr + 1 / 2 WQCV - Zones 1 & 2) =	3.393	acre-feet
Total Detention Basin Volume =	7.392	acre-feet
Initial Surcharge Volume (ISV) =	user	ft^3
Initial Surcharge Depth (ISD) =	user	ft
Total Available Detention Depth (H_{total}) =	user	ft
Depth of Trickle Channel (H_{TC}) =	user	ft
Slope of Trickle Channel (S_{TC}) =	user	ft/ft
Slopes of Main Basin Sides (S_{main}) =	user	H:V
Basin Length-to-Width Ratio ($R_{L/W}$) =	user	
Initial Surcharge Area (A_{ISV}) =	user	ft^2
Surcharge Volume Length (L_{ISV}) =	user	ft
Surcharge Volume Width (W_{ISV}) =	user	ft
Depth of Basin Floor (H_{FLOOR}) =	user	ft
Length of Basin Floor (L_{FLOOR}) =	user	ft
Width of Basin Floor (W_{FLOOR}) =	user	ft
Area of Basin Floor (A_{FLOOR}) =	user	ft^2
Volume of Basin Floor (V_{FLOOR}) =	user	ft^3
Depth of Main Basin (H_{MAIN}) =	user	ft
Length of Main Basin (L_{MAIN}) =	user	ft
Width of Main Basin (W_{MAIN}) =	user	ft
Area of Main Basin (A_{MAIN}) =	user	ft^2
Volume of Main Basin (V_{MAIN}) =	user	ft^3
Calculated Total Basin Volume (V_{total}) =	**user**	acre-feet

pond bottom=5743.35

Depth Increment = 0.20 ft

Stage - Storage Description	Stage (ft)	Optional Override Stage (ft)	Length (ft)	Width (ft)	Area (ft^2)	Optional Override Area (ft^2)	Area (acre)	Volume (ft^3)	Volume (ac-ft)
Top of Micropool	--	0.00	--	--	--	40	0.001		
5743.73	--	0.28	--	--	--	52	0.001	13	0.000
5744	--	0.55	--	--	--	150	0.003	40	0.001
5745	--	1.55	--	--	--	2,770	0.064	1,500	0.034
5746	--	2.55	--	--	--	21,585	0.496	13,677	0.314
5747	--	3.55	--	--	--	45,800	1.051	47,370	1.087
5748	--	4.55	--	--	--	58,580	1.345	99,560	2.286
5749	--	5.55	--	--	--	64,110	1.472	160,905	3.694
5750	--	6.55	--	--	--	69,070	1.586	227,495	5.223
5751	--	7.55	--	--	--	74,138	1.702	299,099	6.866
5752	--	8.55	--	--	--	79,338	1.821	375,837	8.628
5753	--	9.55	--	--	--	84,658	1.943	457,835	10.510
5754	--	10.55	--	--	--	90,066	2.068	545,197	12.516
5755	--	11.55	--	--	--	95,546	2.193	638,003	14.647
5756	--	12.55	--	--	--	99,580	2.286	735,566	16.886

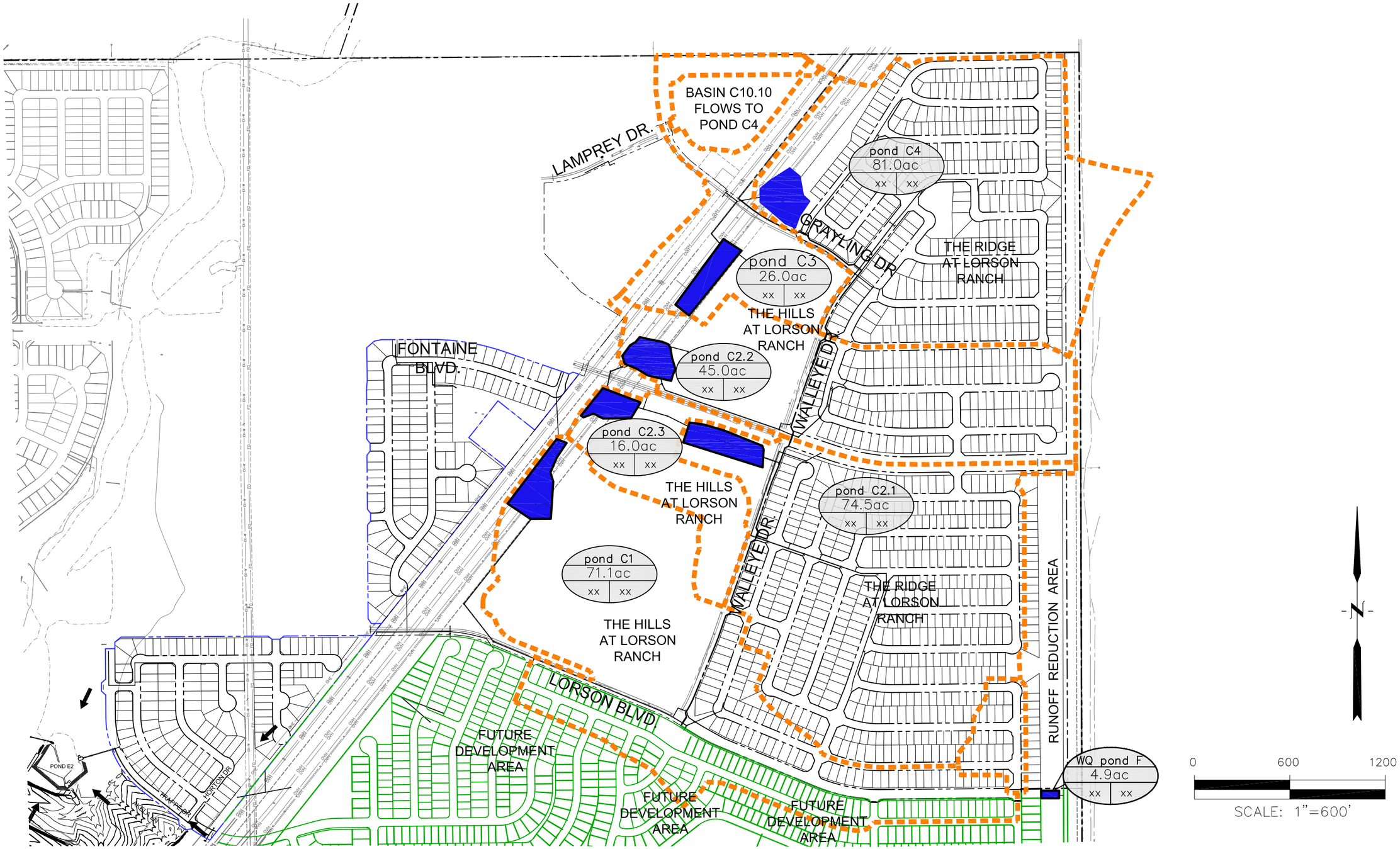

CORE
ENGINEERING GROUP
15004 1ST AVENUE S.
BURNSVILLE, MN 55306
PH: 719.570.1100
CONTACT: RICHARD L. SCHINDLER, P.E.
EMAIL: Rich@ceg1.com

THE RIDGE AT LORSON RANCH
WATER QUALITY & POND TRIBUTARY AREAS

SCALE:	DATE:	FIGURE NO.
NTS	SEPT, 2021	1

MAINTENANCE ACCESS ROAD
NO SCALE

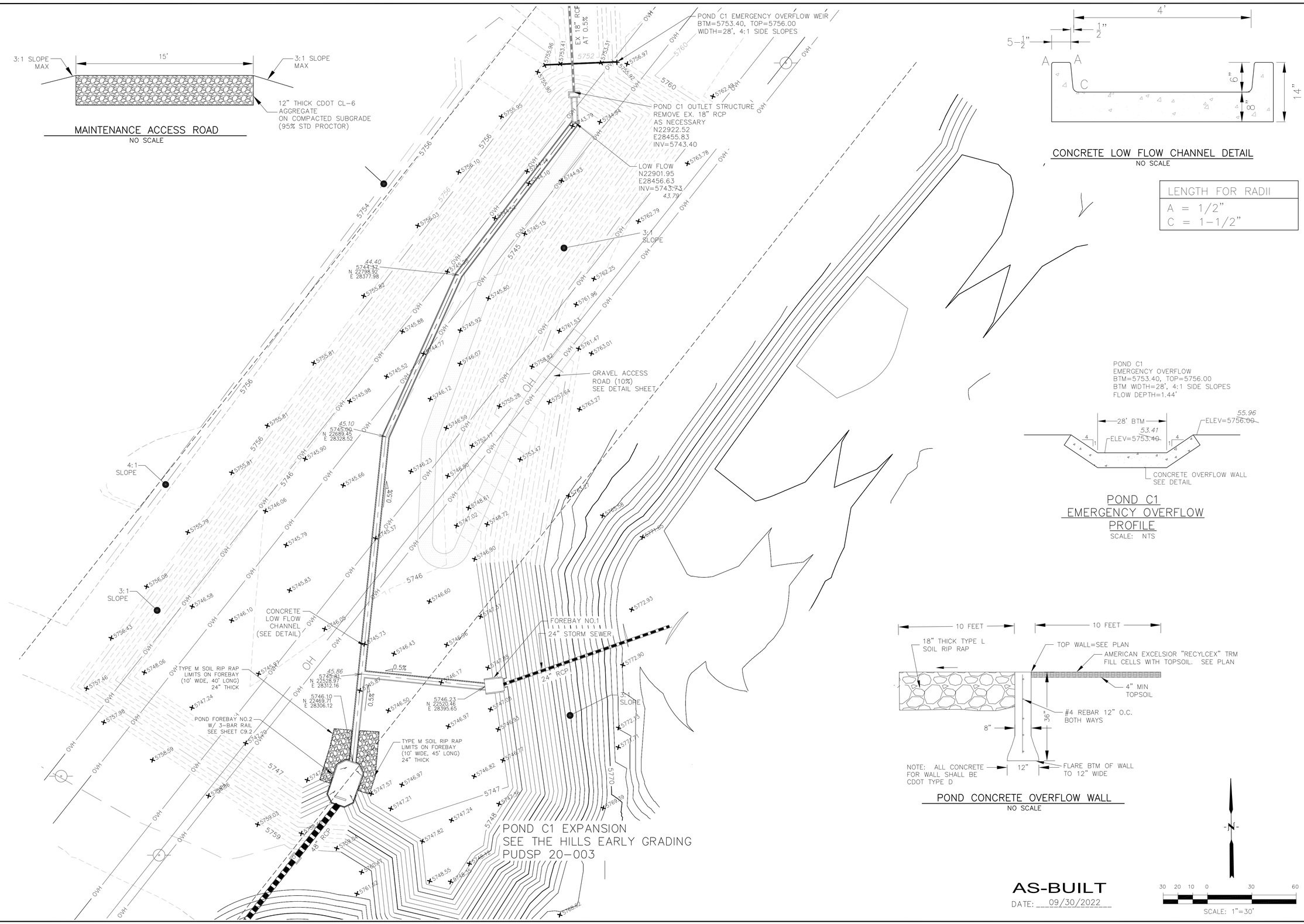

CONCRETE LOW FLOW CHANNEL DETAIL
NO SCALE

LENGTH FOR RADII
A = 1/2"
C = 1-1/2"

POND C1
EMERGENCY OVERFLOW
BTM=5753.40, TOP=5756.00
BTM WIDTH=28', 4:1 SIDE SLOPES
FLOW DEPTH=1.44'

POND C1
EMERGENCY OVERFLOW
PROFILE
SCALE: NTS

POND CONCRETE OVERFLOW WALL
NO SCALE

AS-BUILT
DATE: 09/30/2022

SCALE: 1"=30'

CORE ENGINEERING GROUP
15004 1ST AVENUE S.
BURNSVILLE, MN 55306
PH: 719.570.1100
CONTACT: RICHARD L. SCHINDLER, P.E.
EMAIL: Rich@ceg1.com

NO.	DESCRIPTION	DATE

PREPARED FOR:
LORSON, LLC
212 N. WAHSATCH AVE, SUITE 301
COLORADO SPRINGS, COLORADO 80903
(719) 635-3200
CONTACT: JEFF MARK

PROJECT:
THE HILLS COLLECTOR STREET CONSTRUCTION
FONTAINE BLVD. GRAYLING PL
LORSON BLVD. WALLETT DR. LAMPRECHT DR
COLORADO SPRINGS, COLORADO

DRAWN: RLS
DESIGNED: RLS
CHECKED: RLS

POND C1
FOREBAY, LOW FLOW CHANNEL AND OUTLET STRUCTURE LAYOUT

COLORADO REGISTERED PROFESSIONAL ENGINEER
33997
11-12-2020

DATE: NOV 12, 2020

PROJECT NO. 100.061

SHEET NUMBER C9.1

TOTAL SHEETS: 58

NOTES
1. ALL SPOT ELEVATIONS ARE FLOW LINE UNLESS OTHERWISE NOTED.
2. SEE GRADING PLAN FOR GRADING INFORMATION.
3. ALL STORM SEWER SHALL BE CLASS III RCP.
4. ALL MHs SHALL BE TYPE 1 UNLESS OTHERWISE NOTED.

1 CURVE DATA ID
2 CURB TRANSITIONS
3 PEDESTRIAN RAMP, SEE SHEET C10.1

30 20 10 0 30 60
SCALE: 1"=30'

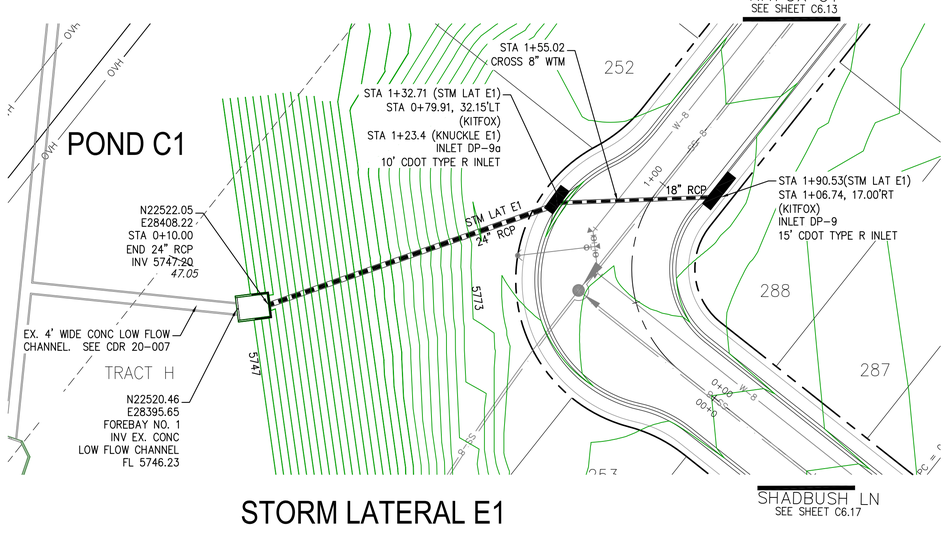

STORM LATERAL E1

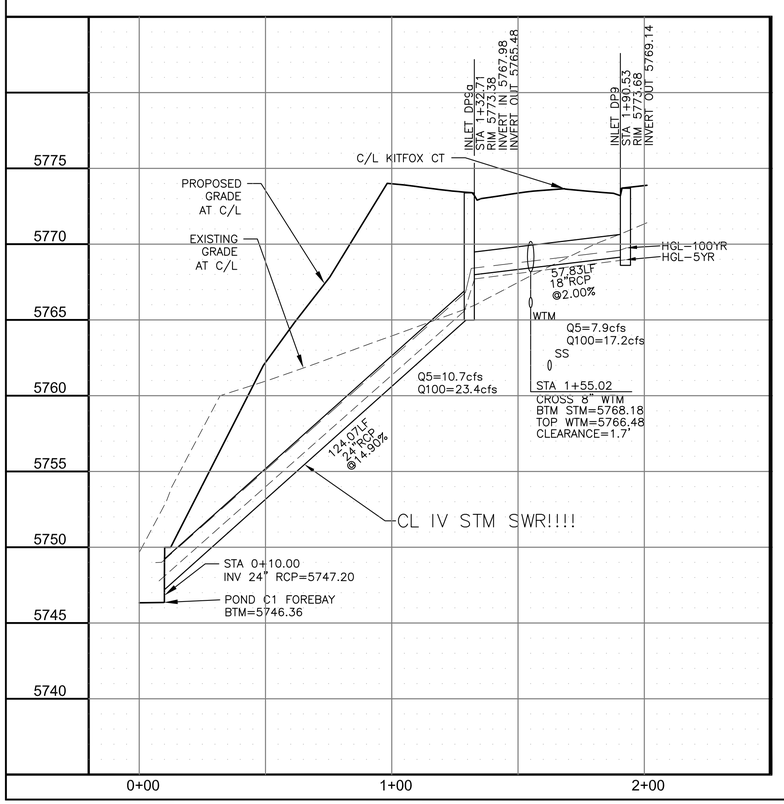

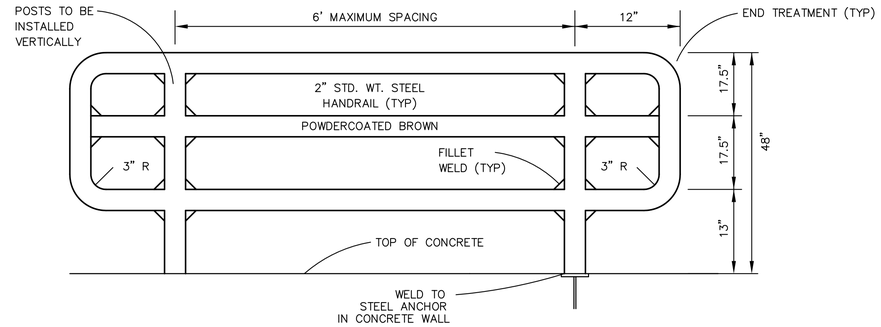

3-BAR RAIL DETAIL
NO SCALE

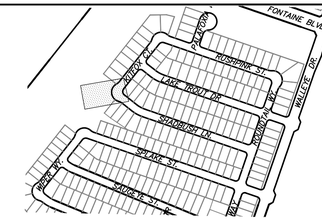

KEY MAP
AREA 'E/G'

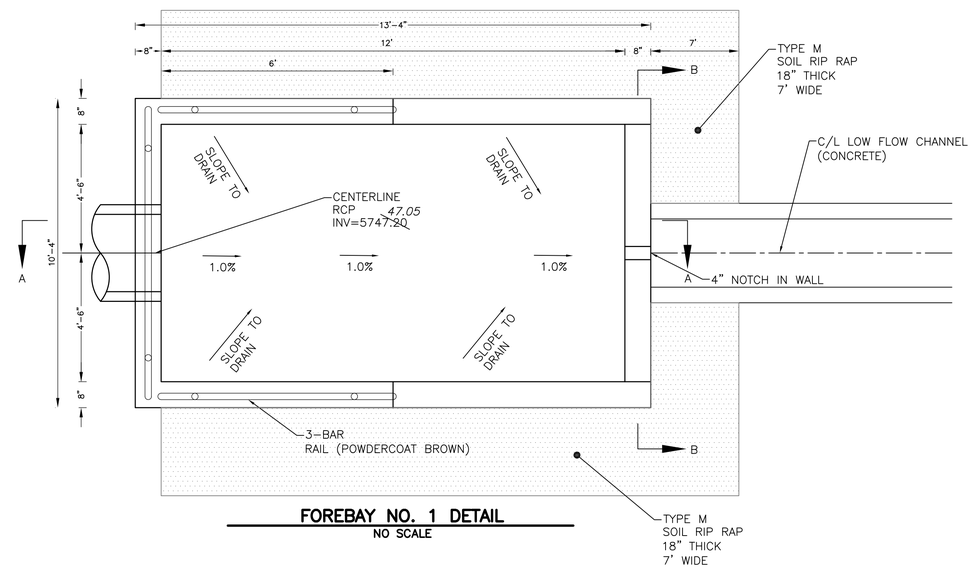

FOREBAY NO. 1 DETAIL
NO SCALE

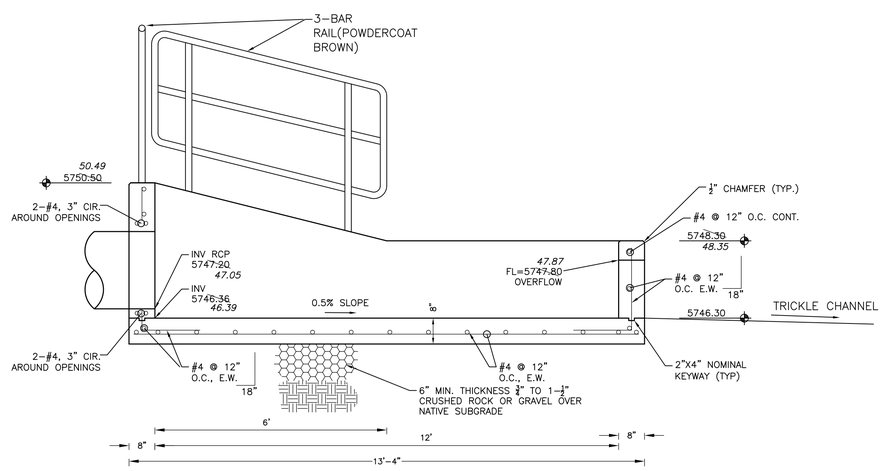

FOREBAY NO. 1 SECTION A-A
NO SCALE

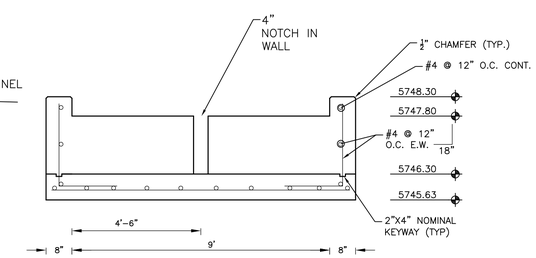

FOREBAY NO. 1 SECTION B-B
NO SCALE

AS-BUILT
DATE: 09/30/2022

CORE ENGINEERING GROUP
15004 1ST AVENUE S.
BURNSVILLE, MN 55306
PH: 719.570.1100
CONTACT: RICHARD L. SCHINDLER, P.E.
EMAIL: Rich@ceg1.com

NO.	DESCRIPTION	DATE
1.	RAISE SITE BY 1' EAST OF POWERLINES	JAN 14, 2021

PREPARED FOR:
LORSON, LLC
212 N. WAHSATCH AVE, SUITE 301
COLORADO SPRINGS, COLORADO 80903
(719) 635-3200
CONTACT: JEFF MARK

PROJECT:
THE HILLS AT LORSON RANCH FILING NO. 1
FONTAINE BLVD - WALLE'E DR
COLORADO SPRINGS, COLORADO

DRAWN: RLS
DESIGNED: RLS
CHECKED: RLS

STORM SEWER LATERAL - AREA 'E/G'
STORM LATERAL E1
STA 0+00 TO 1+90

COLORADO REGISTERED PROFESSIONAL ENGINEER 32997 6-7-2021

DATE: JUNE 7, 2021
PROJECT NO. 100.062
SHEET NUMBER C7.1
TOTAL SHEETS: 42

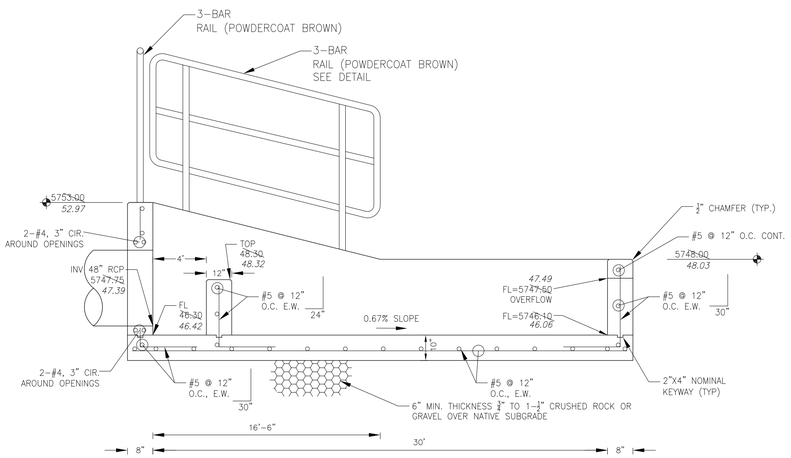

FOREBAY SECTION A–A
NO SCALE

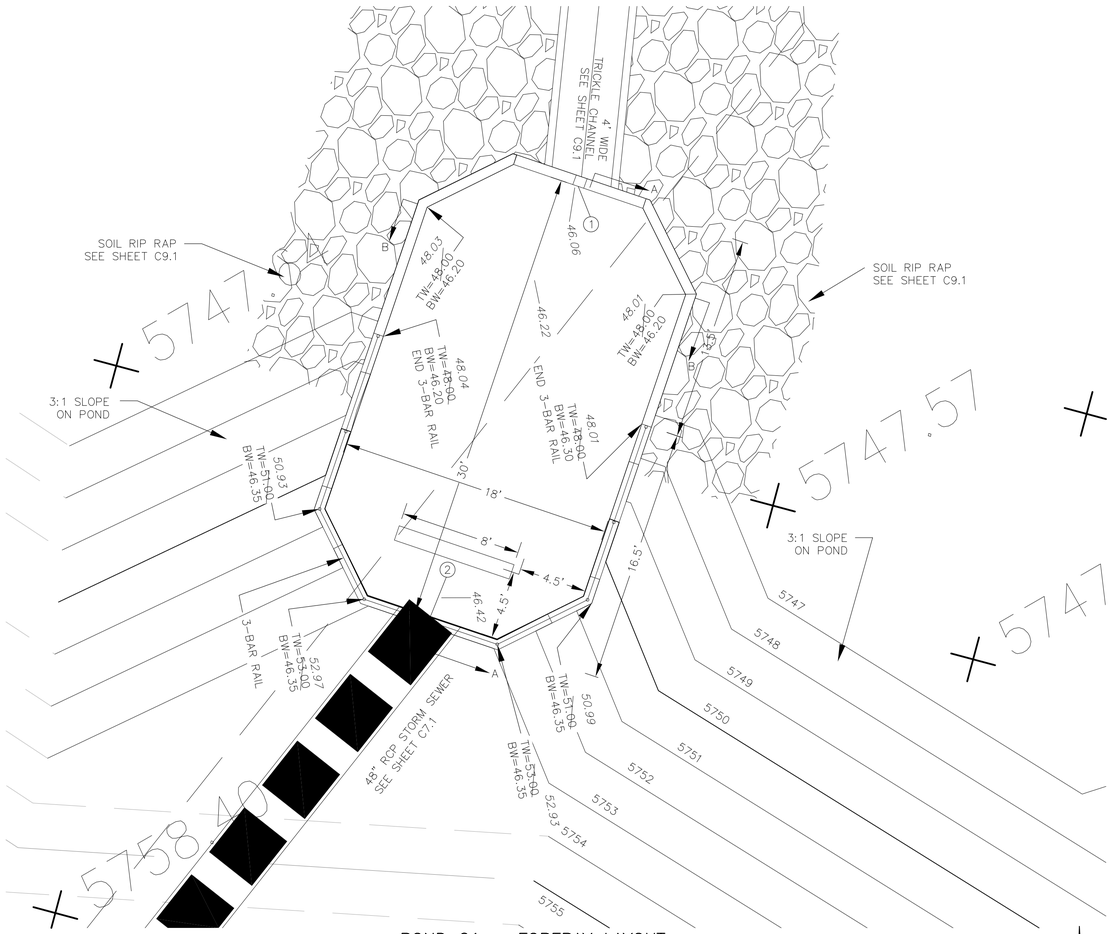

POND C1 – FOREBAY LAYOUT
SCALE: 1"=5'

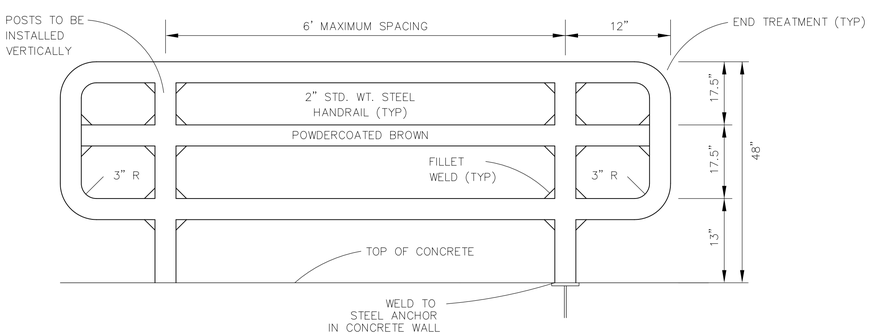

3–BAR RAIL DETAIL
NO SCALE

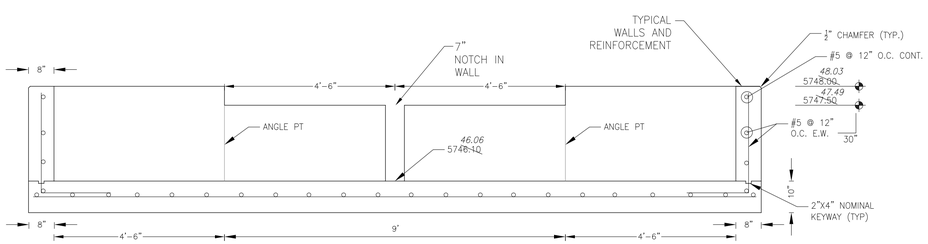

FOREBAY SECTION B–B
NO SCALE

NOTE: ALL CONCRETE FOR FOREBAY SHALL BE CDOT TYPE D

POINT TABLE (FOREBAY)

NUMBER	NORTHING	EASTING	ELEVATION	NOTES
1	22469.08	28305.90	5746.10	FOREBAY BOTTOM
2	22440.71	28296.15	5746.30	FOREBAY BOTTOM, INV 48"=5747.75

AS-BUILT
DATE: 09/30/2022

SCALE: 1"=5'

CORE ENGINEERING GROUP
15004 1ST AVENUE S.
BURNSVILLE, MN 55306
PH: 719.570.1100
CONTACT: RICHARD L. SCHINDLER, P.E.
EMAIL: Rich@ceg1.com

NO.	DESCRIPTION	DATE

PREPARED FOR:
LORSON, LLC
212 N. WAHSATCH AVE, SUITE 301
COLORADO SPRINGS, COLORADO 80903
(719) 635-3200
CONTACT: JEFF MARK

PROJECT:
THE HILLS COLLECTOR STREET CONSTRUCTION
FONTAINE BLVD - GRAYLING RD
LORSON BLVD - WHITE DOVE LANE - FOX RUN DR
COLORADO SPRINGS, COLORADO

DRAWN: RLS
DESIGNED: RLS
CHECKED: RLS

POND C1
FOREBAY NO. 2
FOREBAY DETAILS

COLORADO REGISTERED PROFESSIONAL ENGINEER
RICHARD L. SCHINDLER
33997
11-12-2020

DATE: NOV 12, 2020
PROJECT NO. 100.061
SHEET NUMBER C9.2
TOTAL SHEETS: 58

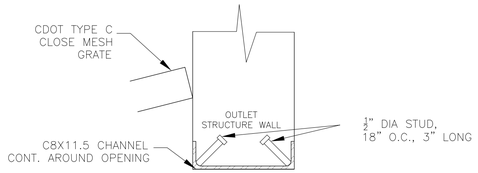

DETAIL A
NO SCALE

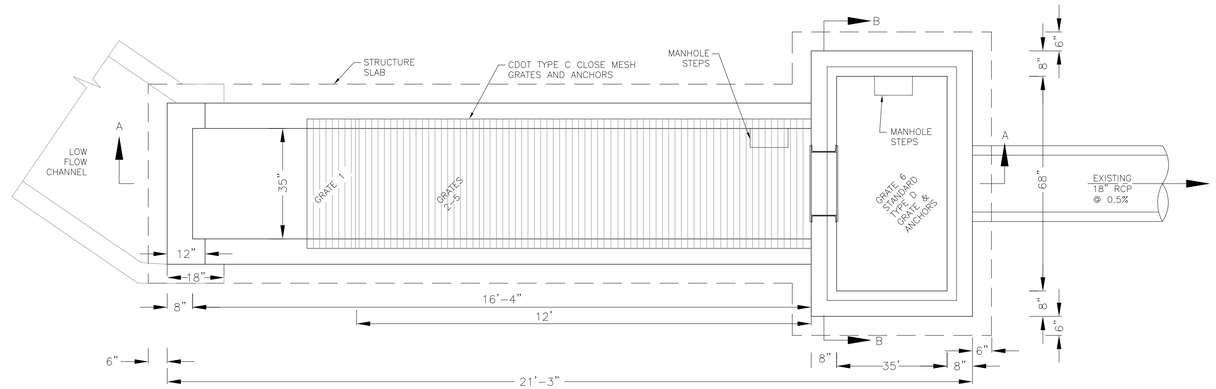

OUTLET STRUCTURE DETAIL – PLAN VIEW
NO SCALE

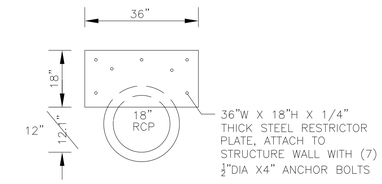

OUTLET RESTRICTOR PLATE
NO SCALE

NOTE:
AFTER CONCRETE STRUCTURE HAS BEEN POURED ALL GRATE DIMENSIONS SHALL BE FIELD VERIFIED PRIOR TO GRATE CONSTRUCTION

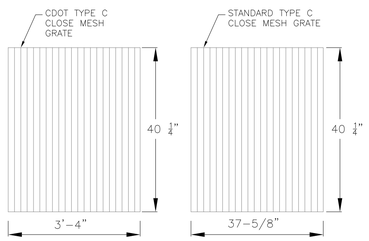

GRATE 1
NO SCALE

GRATES 2,3,4,5
NO SCALE

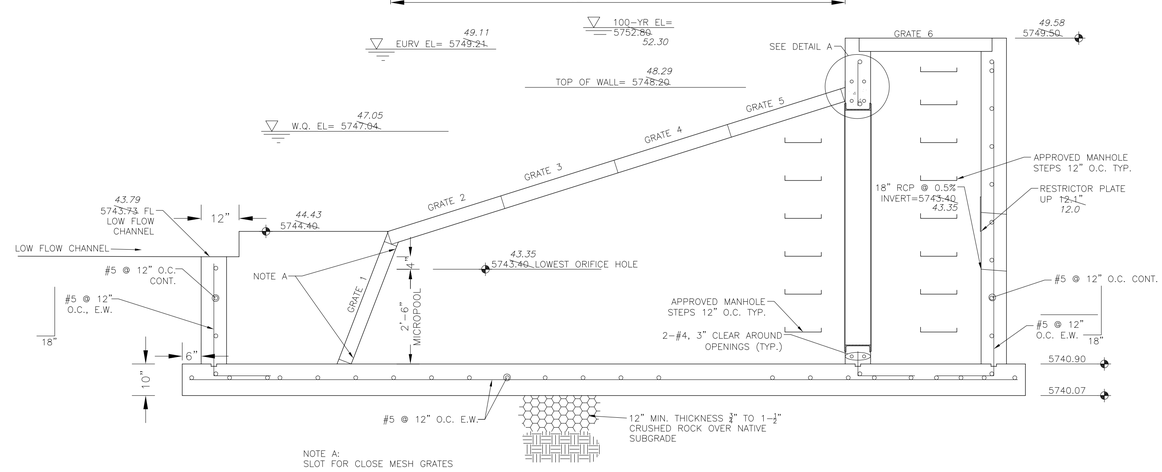

OUTLET STRUCTURE DETAIL – SECTION A–A
NO SCALE

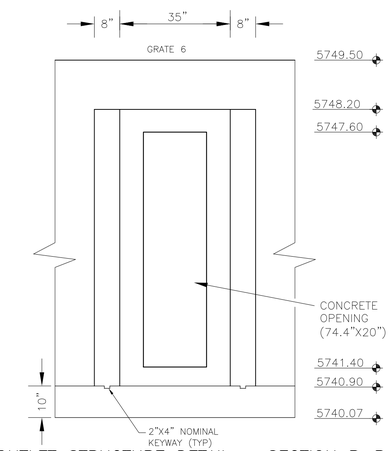

OUTLET STRUCTURE DETAIL – SECTION B–B
NO SCALE

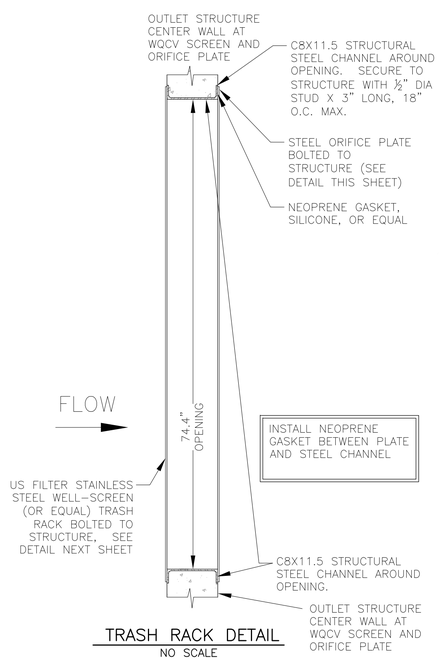

TRASH RACK DETAIL
NO SCALE

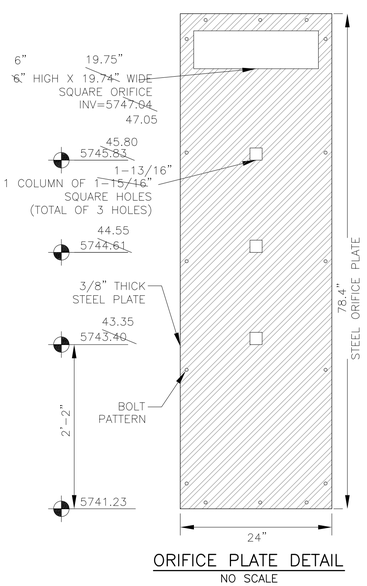

ORIFICE PLATE DETAIL
NO SCALE

OUTLET STRUCTURE, FOREBAY, AND DRAIN CHANNEL NOTES:

1. PRIOR TO CONSTRUCTION, CONTRACTOR SHALL PROVIDE SHOP DRAWINGS FOR ALL COMPONENTS OF THE OUTLET STRUCTURE.
2. GRADE 60 REINFORCING STEEL REQUIRED. SEE TABLE FOR THE MINIMUM LAP SPLICE LENGTH FOR REINFORCING BARS. ALL REINFORCING STEEL SHALL HAVE A TWO-INCH MINIMUM CLEARANCE FROM EDGE OF CONCRETE, UNLESS OTHERWISE NOTED.

BAR SIZE	#4	#5	#6
MIN. SPLICE LENGTH	1'-3"	1'-7"	2'-0"

3. CONCRETE FOR THE OUTLET STRUCTURE AND FOREBAY SHALL BE CDOT CLASS D CONCRETE.
4. CONCRETE FOR DRAIN CHANNELS SHALL BE CDOT CLASS B CONCRETE
5. EXPANSION JOINT MATERIAL SHALL MEET AASHTO SPECIFICATION M-213. EXPANSION JOINT MATERIAL SHALL BE 1/2" THICK, SHALL EXTEND THE FULL DEPTH OF CONTACT SURFACE AND THE JOINT SHALL BE SEALED, REFER TO DETAILS.
6. ALL EXPOSED CONCRETE CORNERS SHALL HAVE A 3/8" CHAMFER UNLESS OTHERWISE NOTED.
7. SUBGRADE TO BE 12" THICK CLEAN FILL COMPACTED TO 95% STANDARD PROCTOR DENSITY PER ASTM M698 UNDER STRUCTURE.
8. REFER TO POND DETAILS FOR PRESEDIMENTATION/FOREBAY DESIGN.
9. ENGINEER SHALL BE NOTIFIED PRIOR TO BEGINNING CONSTRUCITON OF OUTLET STRUCTURE TO SCHEDULE OBSERVATION VISITS FOR STRUCTURES.

WQCV WELL-SCREEN NOTES:

1. Well-Screen shall be stainless steel and attached by stainless steel bolts along edge of the mounting frame.

2. WQCV Well Screen
- Type of Screen: Stainless steel #93 Vee Wire (Johnson Vee Wire (tm) Stainless Steel Screen or equivalent with 60% open area)
- Screen slot opening dimension: 0.139" (Screen #93 Vee Wire Slot Opening)
- Type and Size of Support Rod: TE 0.074"X0.50"
- Spacing of Support Rod (O.C.): 1.0 Inch
- Total Screen Thickness: 0.655"
- Carbon Steel Holding Frame Type: 3/4" x 1.0" angle

AS-BUILT
DATE: 09/30/2022

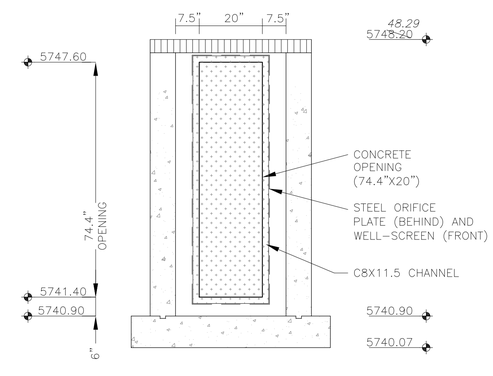

OUTLET STRUCTURE DETAIL – SECTION B–B
NO SCALE

CORE ENGINEERING GROUP
15004 1ST AVENUE S.
BURNSVILLE, MN 55306
PH: 719.570.1100
CONTACT: RICHARD L. SCHINDLER, P.E.
EMAIL: Rich@ceg1.com

NO.	DESCRIPTION	DATE

PREPARED FOR:
LORSON, LLC
212 N. WAHSATCH AVE, SUITE 301
COLORADO SPRINGS, COLORADO 80903
(719) 635-3200
CONTACT: JEFF MARK

PROJECT:
THE HILLS COLLECTOR STREET CONSTRUCTION
FONTAINE BLVD / GRAYLING PK
LORSON BLVD / WALTE PRCHARDY DR
COLORADO SPRINGS, COLORADO

DRAWN: RLS
DESIGNED: RLS
CHECKED: RLS

POND C1
FULL SPECTRUM
OUTLET STRUCTURE DETAILS

COLORADO REGISTERED PROFESSIONAL ENGINEER 33997 11-12-2020

DATE: NOV 12, 2020
PROJECT NO. 100.061
SHEET NUMBER C9.12
TOTAL SHEETS: 58

DETENTION BASIN OUTLET STRUCTURE DESIGN

MHFD-Detention, Version 4.02 (February 2020)

Project: **The Hills at Lorson Ranch**

Basin ID: **Pond C2.1-asbuilt**

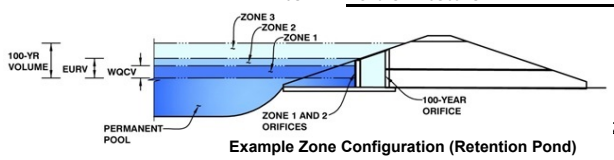

Example Zone Configuration (Retention Pond)

	Estimated Stage (ft)	Estimated Volume (ac-ft)	Outlet Type
Zone 1 (WQCV)	3.32	1.368	Orifice Plate
Zone 2 (EURV)	6.18	3.045	Rectangular Orifice
Z3 (100+1/2WQCV)	8.98	3.745	Weir&Pipe (Restrict)
Total (all zones)		8.159	

User Input: Orifice at Underdrain Outlet (typically used to drain WQCV in a Filtration BMP)

Underdrain Orifice Invert Depth =	N/A	ft (distance below the filtration media surface)	Underdrain Orifice Area =	N/A	ft^2
Underdrain Orifice Diameter =	N/A	inches	Underdrain Orifice Centroid =	N/A	feet

Calculated Parameters for Underdrain

User Input: Orifice Plate with one or more orifices or Elliptical Slot Weir (typically used to drain WQCV and/or EURV in a sedimentation BMP)

Invert of Lowest Orifice =	0.00	ft (relative to basin bottom at Stage = 0 ft)	WQ Orifice Area per Row =	2.778E-02	ft^2
Depth at top of Zone using Orifice Plate =	3.32	ft (relative to basin bottom at Stage = 0 ft)	Elliptical Half-Width =	N/A	feet
Orifice Plate: Orifice Vertical Spacing =	N/A	inches	Elliptical Slot Centroid =	N/A	feet
Orifice Plate: Orifice Area per Row =	4.00	sq. inches (use rectangular openings)	Elliptical Slot Area =	N/A	ft^2

Calculated Parameters for Plate

User Input: Stage and Total Area of Each Orifice Row (numbered from lowest to highest)

	Row 1 (required)	Row 2 (optional)	Row 3 (optional)	Row 4 (optional)	Row 5 (optional)	Row 6 (optional)	Row 7 (optional)	Row 8 (optional)
Stage of Orifice Centroid (ft)	0.00	0.95	2.05					
Orifice Area (sq. inches)	4.00	4.00	4.00					

	Row 9 (optional)	Row 10 (optional)	Row 11 (optional)	Row 12 (optional)	Row 13 (optional)	Row 14 (optional)	Row 15 (optional)	Row 16 (optional)
Stage of Orifice Centroid (ft)								
Orifice Area (sq. inches)								

User Input: Vertical Orifice (Circular or Rectangular)

	Zone 2 Rectangular	Not Selected			Zone 2 Rectangular	Not Selected
Invert of Vertical Orifice =	3.20	N/A	ft (relative to basin bottom at Stage = 0 ft)	Vertical Orifice Area =	0.61	N/A
Depth at top of Zone using Vertical Orifice =	6.18	N/A	ft (relative to basin bottom at Stage = 0 ft)	Vertical Orifice Centroid =	0.25	N/A
Vertical Orifice Height =	6.00	N/A	inches			
Vertical Orifice Width =	14.59		inches			

Calculated Parameters for Vertical Orifi

User Input: Overflow Weir (Dropbox with Flat or Sloped Grate and Outlet Pipe OR Rectangular/Trapezoidal Weir (and No Outlet Pipe)

	Zone 3 Weir	Not Selected			Zone 3 Weir	Not Selected
Overflow Weir Front Edge Height, Ho =	6.11	N/A	ft (relative to basin bottom at Stage = 0 ft)	Height of Grate Upper Edge, H_t =	6.11	N/A
Overflow Weir Front Edge Length =	8.00	N/A	feet	Overflow Weir Slope Length =	6.00	N/A
Overflow Weir Grate Slope =	0.00	N/A	H:V	Grate Open Area / 100-yr Orifice Area =	6.84	N/A
Horiz. Length of Weir Sides =	6.00	N/A	feet	Overflow Grate Open Area w/o Debris =	33.60	N/A
Overflow Grate Open Area % =	70%	N/A	%, grate open area/total area	Overflow Grate Open Area w/ Debris =	16.80	N/A
Debris Clogging % =	50%	N/A	%			

Calculated Parameters for Overflow We

User Input: Outlet Pipe w/ Flow Restriction Plate (Circular Orifice, Restrictor Plate, or Rectangular Orifice)

	Zone 3 Restrictor	Not Selected			Zone 3 Restrictor	Not Selected
Depth to Invert of Outlet Pipe =	0.43	N/A	ft (distance below basin bottom at Stage = 0 ft)	Outlet Orifice Area =	4.91	N/A
Outlet Pipe Diameter =	30.00	N/A	inches	Outlet Orifice Centroid =	1.25	N/A
Restrictor Plate Height Above Pipe Invert =	30.00		inches	Half-Central Angle of Restrictor Plate on Pipe =	3.14	N/A

Calculated Parameters for Outlet Pipe w/ Flow Restriction Pla

User Input: Emergency Spillway (Rectangular or Trapezoidal)

Spillway Invert Stage=	9.18	ft (relative to basin bottom at Stage = 0 ft)	Spillway Design Flow Depth=	1.69	feet
Spillway Crest Length =	25.00	feet	Stage at Top of Freeboard =	11.88	feet
Spillway End Slopes =	4.00	H:V	Basin Area at Top of Freeboard =	1.71	acres
Freeboard above Max Water Surface =	1.01	feet	Basin Volume at Top of Freeboard =	12.77	acre-ft

top micropool = 5761.15 = stage 0

Routed Hydrograph Results

The user can override the default CUHP hydrographs and runoff volumes by entering new values in the Inflow Hydrographs table (Columns W through AF).

Design Storm Return Period =	WQCV	EURV	2 Year	5 Year	10 Year	25 Year	50 Year	100 Year
One-Hour Rainfall Depth (in) =	N/A	N/A	1.19	1.50	1.75	2.00	2.25	2.52
CUHP Runoff Volume (acre-ft) =	1.368	4.414	4.152	5.828	7.285	9.182	10.750	12.716
Inflow Hydrograph Volume (acre-ft) =	N/A	N/A	4.152	5.828	7.285	9.182	10.750	12.716
CUHP Predevelopment Peak Q (cfs) =	N/A	N/A	7.5	21.2	32.2	57.6	72.4	92.1
OPTIONAL Override Predevelopment Peak Q (cfs) =	N/A	N/A						
Predevelopment Unit Peak Flow, q (cfs/acre) =	N/A	N/A	0.10	0.28	0.43	0.77	0.97	1.24
Peak Inflow Q (cfs) =	N/A	N/A	63.8	91.4	112.2	146.0	171.6	201.7
Peak Outflow Q (cfs) =	0.7	6.3	4.9	13.5	32.2	59.3	62.0	66.3
Ratio Peak Outflow to Predevelopment Q =	N/A	N/A	N/A	0.6	1.0	1.0	0.9	0.7
Structure Controlling Flow =	Vertical Orifice 1	Overflow Weir 1	Vertical Orifice 1	Overflow Weir 1	Overflow Weir 1	Outlet Plate 1	Outlet Plate 1	Outlet Plate 1
Max Velocity through Grate 1 (fps) =	N/A	0.03	N/A	0.2	0.8	1.6	1.6	1.7
Max Velocity through Grate 2 (fps) =	N/A	N/A	N/A	N/A	N/A	N/A	N/A	N/A
Time to Drain 97% of Inflow Volume (hours) =	38	46	46	46	45	42	41	38
Time to Drain 99% of Inflow Volume (hours) =	**40**	50	51	52	51	50	49	49
Maximum Ponding Depth (ft) =	3.32	6.18	5.40	6.36	6.68	7.12	7.70	8.69
Area at Maximum Ponding Depth (acres) =	0.93	1.20	1.13	1.22	1.25	1.29	1.34	1.44
Maximum Volume Stored (acre-ft) =	1.369	4.424	3.503	4.642	5.025	5.583	6.347	7.726

DETENTION BASIN STAGE-STORAGE TABLE BUILDER

MHFD-Detention, Version 4.02 (February 2020)

Project: **The Hills at Lorson Ranch**

Basin ID: **Pond C2.1-asbuilt**

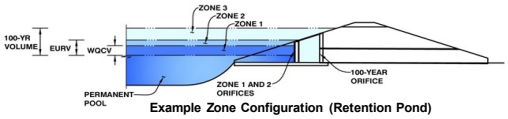

Example Zone Configuration (Retention Pond)

Watershed Information

Selected BMP Type =	**EDB**	
Watershed Area =	74.50	acres
Watershed Length =	2,500	ft
Watershed Length to Centroid =	2,000	ft
Watershed Slope =	0.038	ft/ft
Watershed Imperviousness =	55.00%	percent
Percentage Hydrologic Soil Group A =	0.0%	percent
Percentage Hydrologic Soil Group B =	100.0%	percent
Percentage Hydrologic Soil Groups C/D =	0.0%	percent
Target WQCV Drain Time =	40.0	hours
Location for 1-hr Rainfall Depths =	User Input	

After providing required inputs above including 1-hour rainfall depths, click 'Run CUHP' to generate runoff hydrographs using the embedded Colorado Urban Hydrograph Procedure.

			Optional User Overrides	
Water Quality Capture Volume (WQCV) =	1.368	acre-feet		acre-feet
Excess Urban Runoff Volume (EURV) =	4.414	acre-feet		acre-feet
2-yr Runoff Volume (P1 = 1.19 in.) =	4.152	acre-feet	1.19	inches
5-yr Runoff Volume (P1 = 1.5 in.) =	5.828	acre-feet	1.50	inches
10-yr Runoff Volume (P1 = 1.75 in.) =	7.285	acre-feet	1.75	inches
25-yr Runoff Volume (P1 = 2 in.) =	9.182	acre-feet	2.00	inches
50-yr Runoff Volume (P1 = 2.25 in.) =	10.750	acre-feet	2.25	inches
100-yr Runoff Volume (P1 = 2.52 in.) =	12.716	acre-feet	2.52	inches
500-yr Runoff Volume (P1 = 3.14 in.) =	16.746	acre-feet		inches
Approximate 2-yr Detention Volume =	3.363	acre-feet		
Approximate 5-yr Detention Volume =	4.574	acre-feet		
Approximate 10-yr Detention Volume =	5.970	acre-feet		
Approximate 25-yr Detention Volume =	6.490	acre-feet		
Approximate 50-yr Detention Volume =	6.774	acre-feet		
Approximate 100-yr Detention Volume =	7.475	acre-feet		

Define Zones and Basin Geometry

Zone 1 Volume (WQCV) =	1.368	acre-feet
Zone 2 Volume (EURV - Zone 1) =	3.045	acre-feet
Zone 3 (100yr + 1 / 2 WQCV - Zones 1 & 2) =	3.745	acre-feet
Total Detention Basin Volume =	8.159	acre-feet
Initial Surcharge Volume (ISV) =	user	ft^3
Initial Surcharge Depth (ISD) =	user	ft
Total Available Detention Depth (H_{total}) =	user	ft
Depth of Trickle Channel (H_{TC}) =	user	ft
Slope of Trickle Channel (S_{TC}) =	user	ft/ft
Slopes of Main Basin Sides (S_{main}) =	user	H:V
Basin Length-to-Width Ratio ($R_{L/W}$) =	user	

Initial Surcharge Area (A_{ISV}) =	user	ft^2
Surcharge Volume Length (L_{ISV}) =	user	ft
Surcharge Volume Width (W_{ISV}) =	user	ft
Depth of Basin Floor (H_{FLOOR}) =	user	ft
Length of Basin Floor (L_{FLOOR}) =	user	ft
Width of Basin Floor (W_{FLOOR}) =	user	ft
Area of Basin Floor (A_{FLOOR}) =	user	ft^2
Volume of Basin Floor (V_{FLOOR}) =	user	ft^3
Depth of Main Basin (H_{MAIN}) =	user	ft
Length of Main Basin (L_{MAIN}) =	user	ft
Width of Main Basin (W_{MAIN}) =	user	ft
Area of Main Basin (A_{MAIN}) =	user	ft^2
Volume of Main Basin (V_{MAIN}) =	user	ft^3
Calculated Total Basin Volume (V_{total}) =	**user**	acre-feet

top micropool-5761.15

Depth Increment = 0.20 ft

Stage - Storage Description	Stage (ft)	Optional Override Stage (ft)	Length (ft)	Width (ft)	Area (ft^2)	Optional Override Area (ft^2)	Area (acre)	Volume (ft^3)	Volume (ac-ft)
Top of Micropool	--	0.00	--	--	--	42	0.001		
5761.33	--	0.18	--	--	--	50	0.001	8	0.000
5762	--	0.85	--	--	--	1,416	0.033	499	0.011
5763	--	1.85	--	--	--	20,706	0.475	11,560	0.265
5764	--	2.85	--	--	--	38,417	0.882	41,122	0.944
5765	--	3.85	--	--	--	42,600	0.978	81,630	1.874
5766	--	4.85	--	--	--	47,200	1.084	126,530	2.905
5767	--	5.85	--	--	--	51,043	1.172	175,652	4.032
5768	--	6.85	--	--	--	55,100	1.265	228,723	5.251
5769	--	7.85	--	--	--	59,246	1.360	285,896	6.563
5770	--	8.85	--	--	--	63,574	1.459	347,306	7.973
5771	--	9.85	--	--	--	67,939	1.560	413,063	9.483
5772	--	10.85	--	--	--	71,920	1.651	482,992	11.088
5773	--	11.85	--	--	--	74,434	1.709	556,169	12.768
	--		--	--	--				
	--		--	--	--				
	--		--	--	--				
	--		--	--	--				
	--		--	--	--				
	--		--	--	--				
	--		--	--	--				
	--		--	--	--				
	--		--	--	--				
	--		--	--	--				
	--		--	--	--				
	--		--	--	--				
	--		--	--	--				
	--		--	--	--				
	--		--	--	--				
	--		--	--	--				
	--		--	--	--				
	--		--	--	--				
	--		--	--	--				
	--		--	--	--				
	--		--	--	--				
	--		--	--	--				
	--		--	--	--				
	--		--	--	--				
	--		--	--	--				
	--		--	--	--				
	--		--	--	--				
	--		--	--	--				
	--		--	--	--				
	--		--	--	--				
	--		--	--	--				
	--		--	--	--				
	--		--	--	--				
	--		--	--	--				
	--		--	--	--				
	--		--	--	--				
	--		--	--	--				
	--		--	--	--				
	--		--	--	--				
	--		--	--	--				
	--		--	--	--				
	--		--	--	--				
	--		--	--	--				
	--		--	--	--				
	--		--	--	--				
	--		--	--	--				
	--		--	--	--				
	--		--	--	--				
	--		--	--	--				
	--		--	--	--				
	--		--	--	--				
	--		--	--	--				
	--		--	--	--				
	--		--	--	--				
	--		--	--	--				
	--		--	--	--				
	--		--	--	--				
	--		--	--	--				
	--		--	--	--				
	--		--	--	--				
	--		--	--	--				
	--		--	--	--				
	--		--	--	--				
	--		--	--	--				
	--		--	--	--				
	--		--	--	--				
	--		--	--	--				
	--		--	--	--				
	--		--	--	--				
	--		--	--	--				
	--		--	--	--				
	--		--	--	--				
	--		--	--	--				
	--		--	--	--				
	--		--	--	--				
	--		--	--	--				
	--		--	--	--				
	--		--	--	--				
	--		--	--	--				
	--		--	--	--				
	--		--	--	--				
	--		--	--	--				
	--		--	--	--				
	--		--	--	--				
	--		--	--	--				
	--		--	--	--				
	--		--	--	--				
	--		--	--	--				

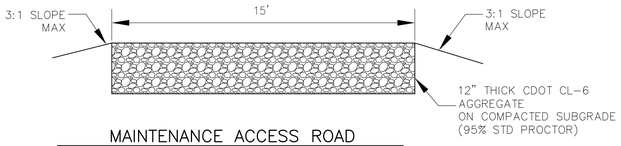

MAINTENANCE ACCESS ROAD
NO SCALE

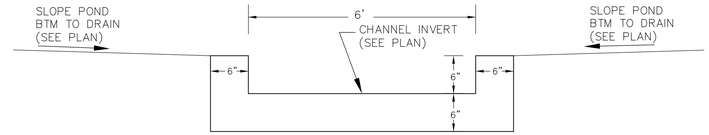

CONCRETE LOW FLOW CHANNEL
N.T.S.

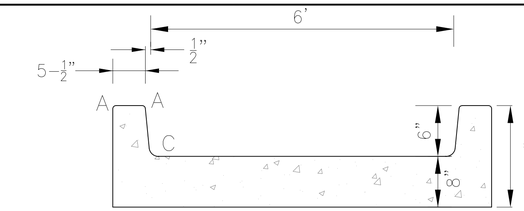

CONCRETE LOW FLOW CHANNEL DETAIL
NO SCALE

LENGTH FOR RADII
A = 1/2"
C = 1-1/2"

POND C2.1 IS LOCATED IN TRACT G, THE HILLS AT LORSON RANCH FILING NO. 1. SEE MAINTENANCE AGREEMENT AT REC. NO. 220211669

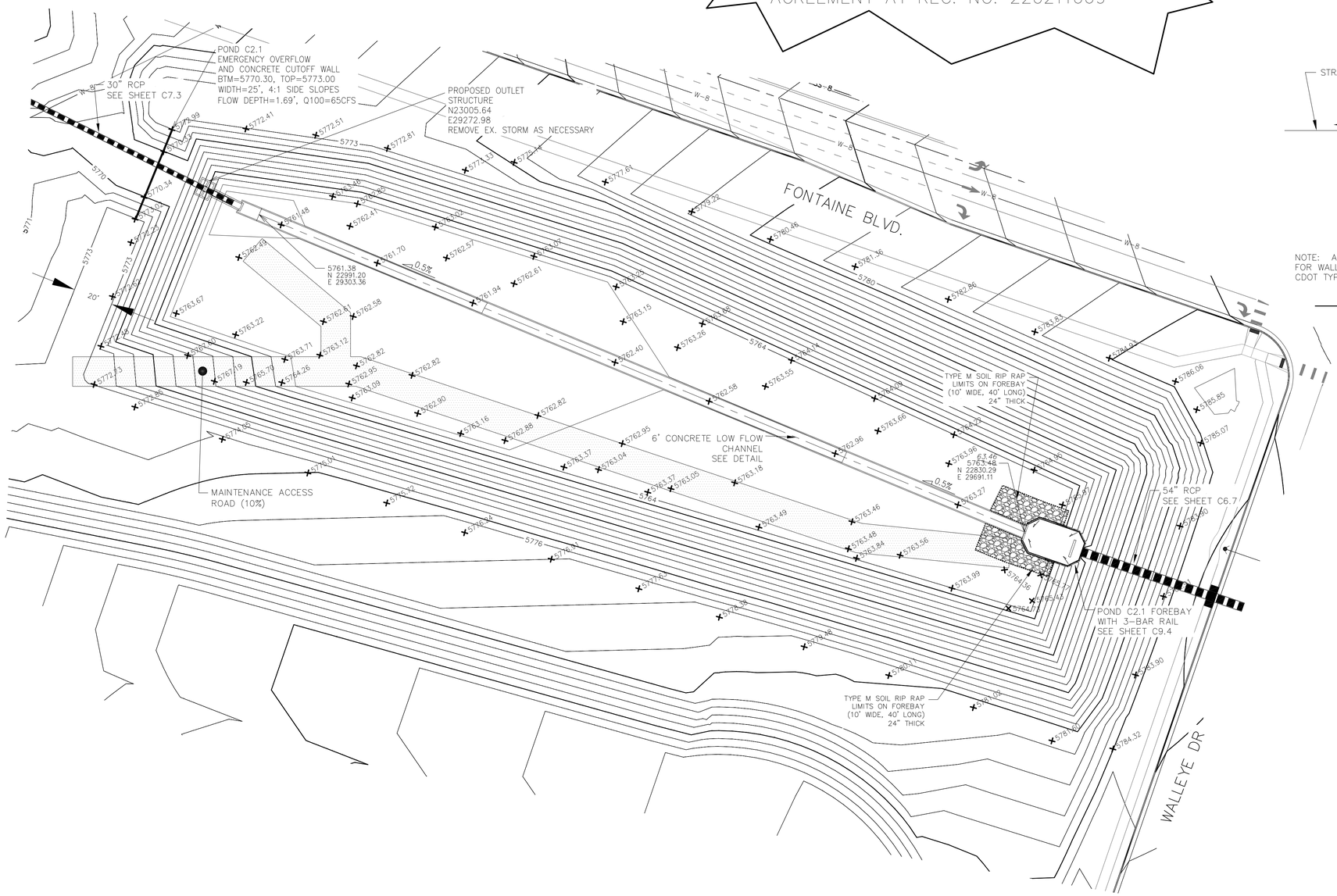

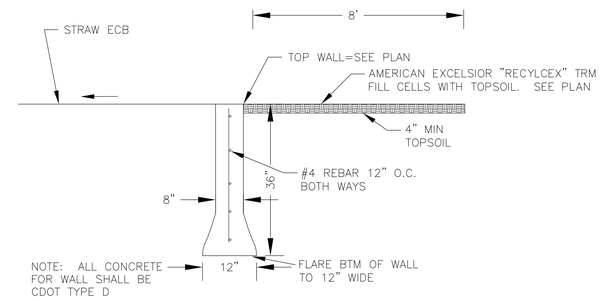

POND CONCRETE CUTOFF WALL
NO SCALE

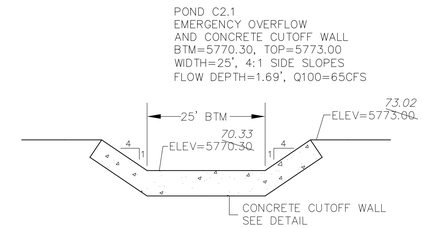

POND C2.1
EMERGENCY OVERFLOW
AND CONCRETE CUTOFF WALL
PROFILE
SCALE: NTS

AS-BUILT
DATE: 09/30/2022

30 20 10 0 30 60
SCALE: 1"=30'

CORE ENGINEERING GROUP
15004 1ST AVENUE S.
BURNSVILLE, MN 55306
PH: 719.570.1100
CONTACT: RICHARD L. SCHINDLER, P.E.
EMAIL: Rich@ceg1.com

NO.	DESCRIPTION	DATE
1.	RAISE SITE 1' EAST OF POWERLINES	JAN 12, 2021

PREPARED FOR:
LORSON, LLC
212 N. WAHSATCH AVE, SUITE 301
COLORADO SPRINGS, COLORADO 80903
(719) 635-3200
CONTACT: JEFF MARK

PROJECT:
THE HILLS COLLECTOR STREET CONSTRUCTION
FONTAINE BLVD. GRAYLING PARK
LORSON RANCH, WALLEYE DR. AND WALLEYE DR
COLORADO SPRINGS, COLORADO

DRAWN: RLS
DESIGNED: RLS
CHECKED: RLS

POND C2.1
FOREBAY AND LOW FLOW CHANNEL LAYOUT

COLORADO REGISTERED PROFESSIONAL ENGINEER
RICHARD L. SCHINDLER
33997
11-12-2020

DATE: NOV 12, 2020
PROJECT NO. 100.061
SHEET NUMBER C9.3
TOTAL SHEETS: 58

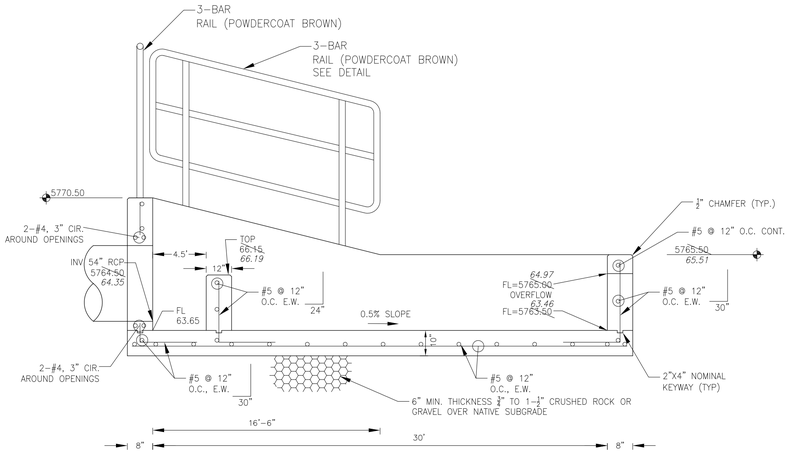

FOREBAY SECTION A–A
NO SCALE

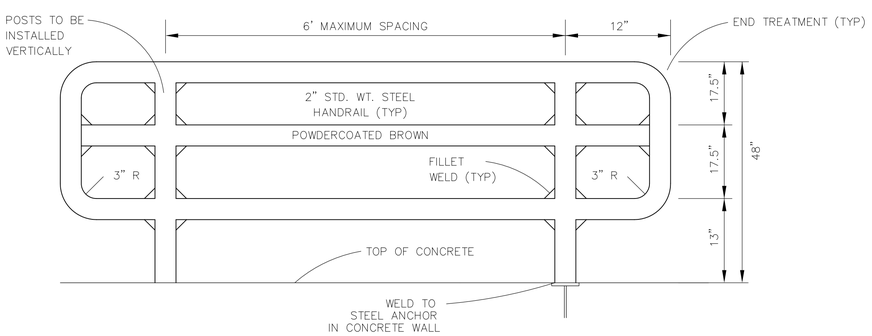

3–BAR RAIL DETAIL
NO SCALE

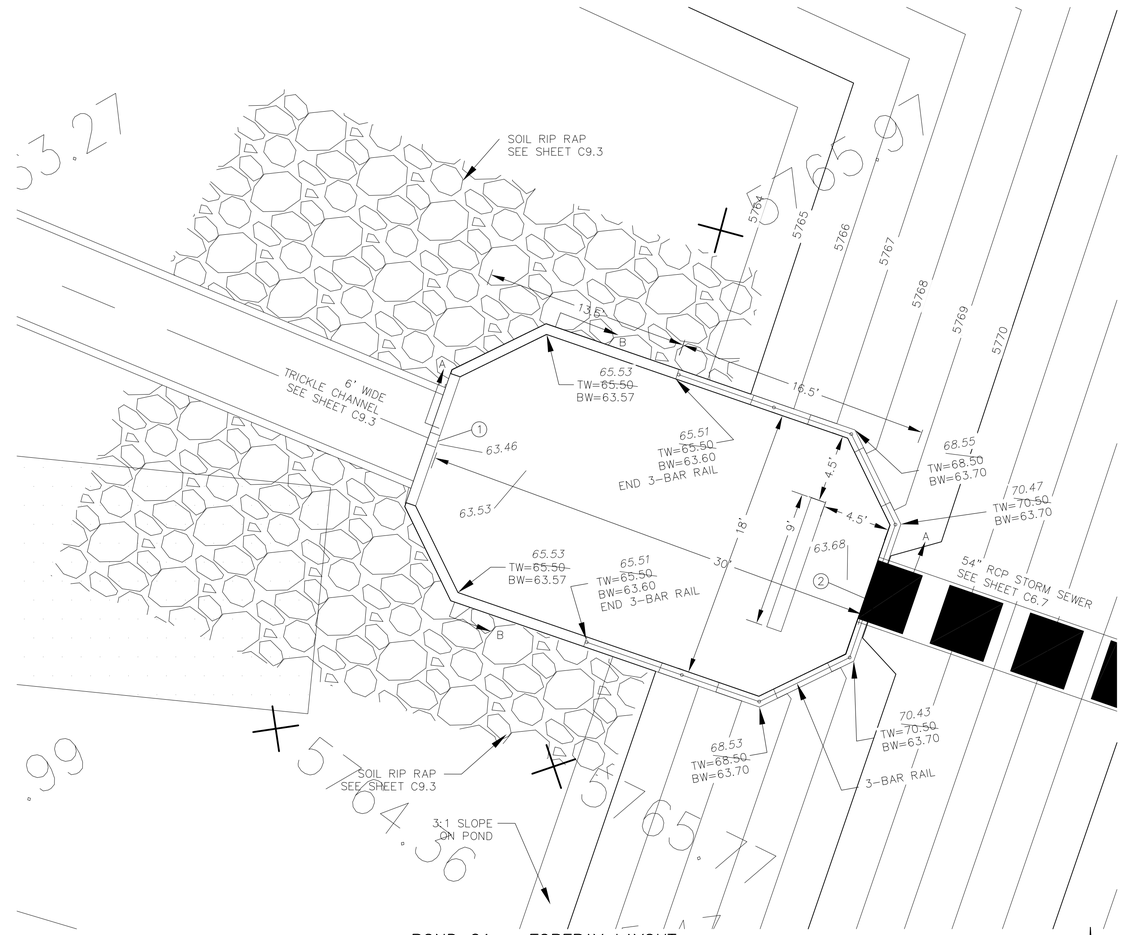

POND C1 – FOREBAY LAYOUT
SCALE: 1"=5'

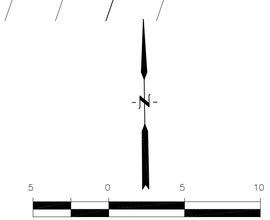

SCALE: 1"=5'

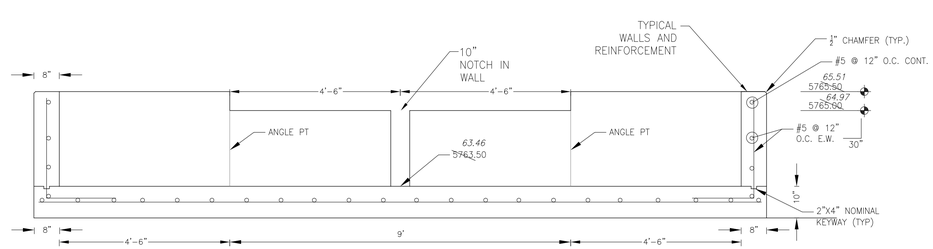

FOREBAY SECTION B–B
NO SCALE

NOTE: ALL CONCRETE FOR FOREBAY SHALL BE CDOT TYPE D

POINT TABLE (FOREBAY)

NUMBER	NORTHING	EASTING	ELEVATION	NOTES
1	22830.08	29691.75	5763.50	FOREBAY BOTTOM
2	22820.31	29720.11	5763.65	FOREBAY BOTTOM, INV 54"=5764.50

AS-BUILT
DATE: 09/30/2022

CORE
ENGINEERING GROUP
15004 1ST AVENUE S.
BURNSVILLE, MN 55306
PH: 719.570.1100
CONTACT: RICHARD L. SCHINDLER, P.E.
EMAIL: Rich@ceg1.com

NO.	DESCRIPTION	DATE
1.	RAISE SITE 1' EAST OF POWERLINES	JAN 12, 2021

PREPARED FOR:
LORSON, LLC
212 N. WAHSATCH AVE, SUITE 301
COLORADO SPRINGS, COLORADO 80903
(719) 635-3200
CONTACT: JEFF MARK

PROJECT:
THE HILLS COLLECTOR
STREET CONSTRUCTION
FONTAINE BLVD - GRAYLING PK
LORSON BLVD - WALTE DR - AMY PK DR
COLORADO SPRINGS, COLORADO

DRAWN: RLS
DESIGNED: RLS
CHECKED: RLS

POND C2.1

FOREBAY DETAILS

COLORADO REGISTERED PROFESSIONAL ENGINEER
RICHARD L. SCHINDLER
33997
11-12-2020

DATE:
NOV 12, 2020

PROJECT NO.
100.061

SHEET NUMBER
C9.4
TOTAL SHEETS: 58

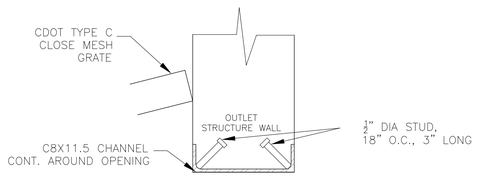

DETAIL A
NO SCALE

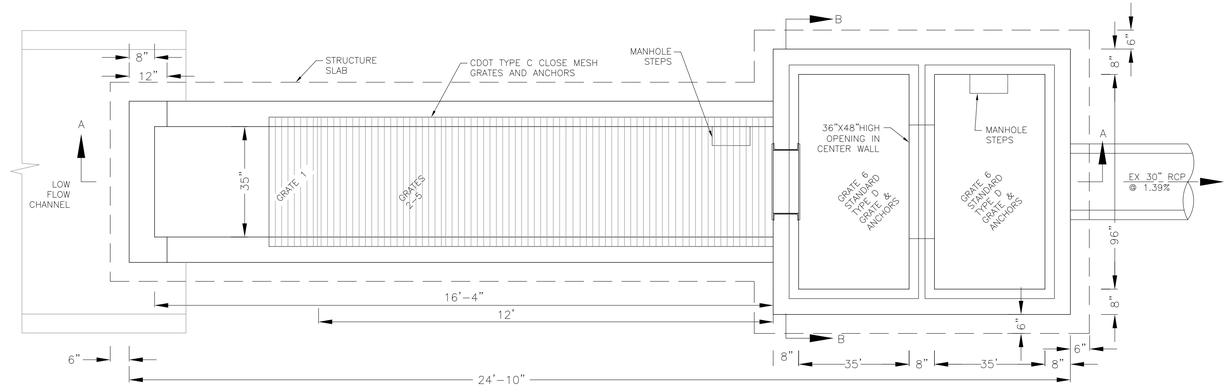

OUTLET STRUCTURE DETAIL – PLAN VIEW
NO SCALE

NOTE:
AFTER CONCRETE STRUCTURE HAS BEEN POURED ALL GRATE DIMENSIONS SHALL BE FIELD VERIFIED PRIOR TO GRATE CONSTRUCTION

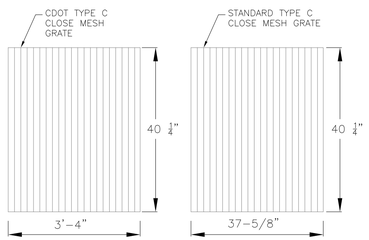

GRATE 1
NO SCALE

GRATES 2,3,4,5
NO SCALE

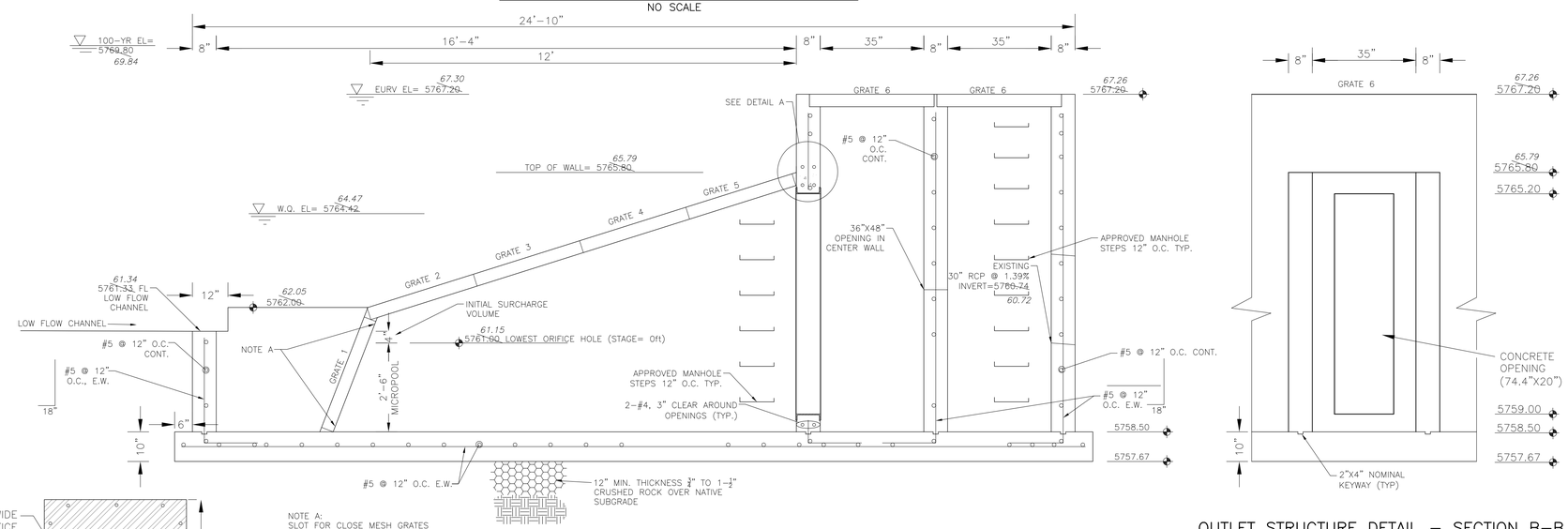

NOTE A:
SLOT FOR CLOSE MESH GRATES

OUTLET STRUCTURE DETAIL – SECTION A–A
NO SCALE

OUTLET STRUCTURE DETAIL – SECTION B–B
NO SCALE

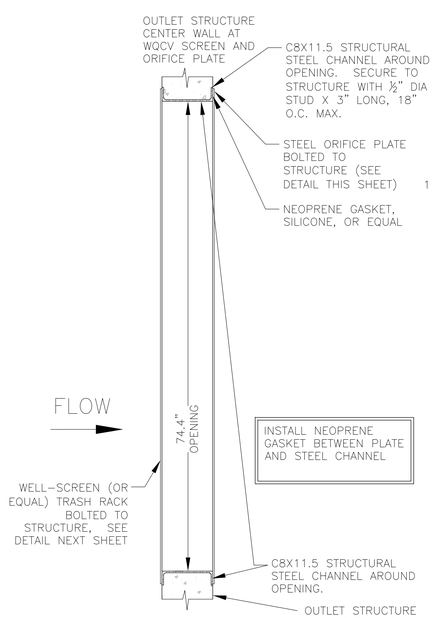

TRASH RACK DETAIL
NO SCALE

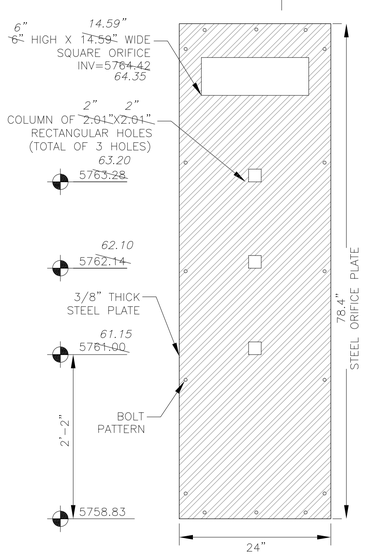

ORIFICE PLATE DETAIL
NO SCALE

OUTLET STRUCTURE, FOREBAY, AND DRAIN CHANNEL NOTES:

1. PRIOR TO CONSTRUCTION, CONTRACTOR SHALL PROVIDE SHOP DRAWINGS FOR ALL COMPONENTS OF THE OUTLET STRUCTURE.
2. GRADE 60 REINFORCING STEEL REQUIRED. SEE TABLE FOR THE MINIMUM LAP SPLICE LENGTH FOR REINFORCING BARS. ALL REINFORCING STEEL SHALL HAVE A TWO-INCH MINIMUM CLEARANCE FROM EDGE OF CONCRETE, UNLESS OTHERWISE NOTED.

BAR SIZE	#4	#5	#6
MIN. SPLICE LENGTH	1'-3"	1'-7"	2'-0"

3. CONCRETE FOR THE OUTLET STRUCTURE AND FOREBAY SHALL BE CDOT CLASS D CONCRETE.
4. CONCRETE FOR DRAIN CHANNELS SHALL BE CDOT CLASS B CONCRETE
5. EXPANSION JOINT MATERIAL SHALL MEET AASHTO SPECIFICATION M-213. EXPANSION JOINT MATERIAL SHALL BE 1/2" THICK, SHALL EXTEND THE FULL DEPTH OF CONTACT SURFACE AND THE JOINT SHALL BE SEALED, REFER TO DETAILS.
6. ALL EXPOSED CONCRETE CORNERS SHALL HAVE A 3/8" CHAMFER UNLESS OTHERWISE NOTED.
7. SUBGRADE TO BE 12" THICK CLEAN FILL COMPACTED TO 95% STANDARD PROCTOR DENSITY PER ASTM M698 UNDER STRUCTURE.
8. REFER TO POND DETAILS FOR PRESEDIMENTATION/FOREBAY DESIGN.
9. ENGINEER SHALL BE NOTIFIED PRIOR TO BEGINNING CONSTRUCITON OF OUTLET STRUCTURE TO SCHEDULE OBSERVATION VISITS FOR STRUCTURES.

WQCV WELL-SCREEN NOTES:

1. Well-Screen shall be stainless steel and attached by stainless steel bolts along edge of the mounting frame.

2. WQCV Well Screen
- Type of Screen: Stainless steel #93 Vee Wire (Johnson Vee Wire (tm) Stainless Steel Screen or equivalent with 60% open area)
- Screen slot opening dimension: 0.139" (Screen #93 Vee Wire Slot Opening)
- Type and Size of Support Rod: TE 0.074"X0.50"
- Spacing of Support Rod (O.C.): 1.0 Inch
- Total Screen Thickness: 0.655"
- Carbon Steel Holding Frame Type: 3/4" x 1.0" angle

AS-BUILT
DATE: 09/30/2022

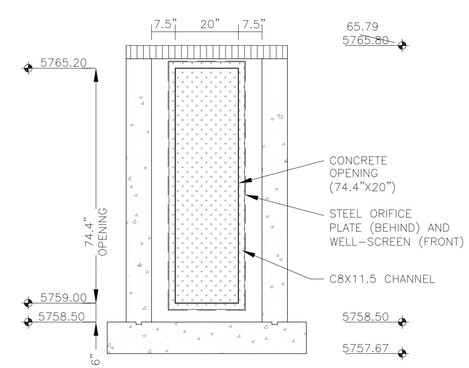

OUTLET STRUCTURE DETAIL – SECTION B–B
NO SCALE

CORE ENGINEERING GROUP
15004 1ST AVENUE S.
BURNSVILLE, MN 55306
PH: 719.570.1100
CONTACT: RICHARD L. SCHINDLER, P.E.
EMAIL: Rich@ceg1.com

NO.	DESCRIPTION	DATE

PREPARED FOR:
LORSON, LLC
212 N. WAHSATCH AVE, SUITE 301
COLORADO SPRINGS, COLORADO 80903
(719) 635-3200
CONTACT: JEFF MARK

PROJECT:
THE RIDGE AT LORSON RANCH
FONTAINE BLVD – WALLEYE DR
COLORADO SPRINGS, COLORADO

DRAWN: RLS
DESIGNED: RLS
CHECKED: RLS

POND C2.1
FULL SPECTRUM
OUTLET STRUCTURE DETAILS

COLORADO REGISTERED PROFESSIONAL ENGINEER
RICHARD L. SCHINDLER
NO. 33997
11/5/2021

DATE: NOV 5, 2021
PROJECT NO. 100.064
SHEET NUMBER C9.4
TOTAL SHEETS: 23

DETENTION BASIN OUTLET STRUCTURE DESIGN

MHFD-Detention, Version 4.02 (February 2020)

Project: **The Hills at Lorson Ranch**

Basin ID: **Pond C2.2-asbuilt**

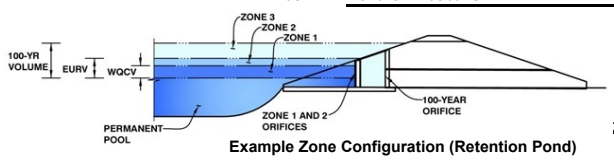

Example Zone Configuration (Retention Pond)

	Estimated Stage (ft)	Estimated Volume (ac-ft)	Outlet Type
Zone 1 (WQCV)	3.40	0.827	Orifice Plate
Zone 2 (EURV)	5.40	1.824	Rectangular Orifice
Z3 (100+1/2WQCV)	7.54	2.269	Weir&Pipe (Restrict)
Total (all zones)		4.920	

User Input: Orifice at Underdrain Outlet (typically used to drain WQCV in a Filtration BMP)

Underdrain Orifice Invert Depth =	N/A	ft (distance below the filtration media surface)	Underdrain Orifice Area =	N/A	ft^2
Underdrain Orifice Diameter =	N/A	inches	Underdrain Orifice Centroid =	N/A	feet

Calculated Parameters for Underdrain

User Input: Orifice Plate with one or more orifices or Elliptical Slot Weir (typically used to drain WQCV and/or EURV in a sedimentation BMP)

Invert of Lowest Orifice =	0.00	ft (relative to basin bottom at Stage = 0 ft)	WQ Orifice Area per Row =	1.535E-02	ft^2
Depth at top of Zone using Orifice Plate =	3.40	ft (relative to basin bottom at Stage = 0 ft)	Elliptical Half-Width =	N/A	feet
Orifice Plate: Orifice Vertical Spacing =	N/A	inches	Elliptical Slot Centroid =	N/A	feet
Orifice Plate: Orifice Area per Row =	2.21	sq. inches (diameter = 1-11/16 inches)	Elliptical Slot Area =	N/A	ft^2

Calculated Parameters for Plate

User Input: Stage and Total Area of Each Orifice Row (numbered from lowest to highest)

	Row 1 (required)	Row 2 (optional)	Row 3 (optional)	Row 4 (optional)	Row 5 (optional)	Row 6 (optional)	Row 7 (optional)	Row 8 (optional)
Stage of Orifice Centroid (ft)	0.00	1.15	2.20					
Orifice Area (sq. inches)	2.21	2.21	2.21					

	Row 9 (optional)	Row 10 (optional)	Row 11 (optional)	Row 12 (optional)	Row 13 (optional)	Row 14 (optional)	Row 15 (optional)	Row 16 (optional)
Stage of Orifice Centroid (ft)								
Orifice Area (sq. inches)								

User Input: Vertical Orifice (Circular or Rectangular)

	Zone 2 Rectangular	Not Selected			Zone 2 Rectangular	Not Selected
Invert of Vertical Orifice =	3.30	N/A	ft (relative to basin bottom at Stage = 0 ft)	Vertical Orifice Area =	0.25	N/A
Depth at top of Zone using Vertical Orifice =	5.40	N/A	ft (relative to basin bottom at Stage = 0 ft)	Vertical Orifice Centroid =	0.25	N/A
Vertical Orifice Height =	6.00	N/A	inches			
Vertical Orifice Width =	6.00		inches			

Calculated Parameters for Vertical Orifi

User Input: Overflow Weir (Dropbox with Flat or Sloped Grate and Outlet Pipe OR Rectangular/Trapezoidal Weir (and No Outlet Pipe)

	Zone 3 Weir	Not Selected			Zone 3 Weir	Not Selected
Overflow Weir Front Edge Height, Ho =	7.06	N/A	ft (relative to basin bottom at Stage = 0 ft)	Height of Grate Upper Edge, H_t =	7.06	N/A
Overflow Weir Front Edge Length =	8.00	N/A	feet	Overflow Weir Slope Length =	6.00	N/A
Overflow Weir Grate Slope =	0.00	N/A	H:V	Grate Open Area / 100-yr Orifice Area =	10.58	N/A
Horiz. Length of Weir Sides =	6.00	N/A	feet	Overflow Grate Open Area w/o Debris =	33.60	N/A
Overflow Grate Open Area % =	70%	N/A	%, grate open area/total area	Overflow Grate Open Area w/ Debris =	16.80	N/A
Debris Clogging % =	50%	N/A	%			

Calculated Parameters for Overflow We

User Input: Outlet Pipe w/ Flow Restriction Plate (Circular Orifice, Restrictor Plate, or Rectangular Orifice)

	Zone 3 Restrictor	Not Selected			Zone 3 Restrictor	Not Selected
Depth to Invert of Outlet Pipe =	0.00	N/A	ft (distance below basin bottom at Stage = 0 ft)	Outlet Orifice Area =	3.18	N/A
Outlet Pipe Diameter =	30.00	N/A	inches	Outlet Orifice Centroid =	0.87	N/A
Restrictor Plate Height Above Pipe Invert =	18.50		inches	Half-Central Angle of Restrictor Plate on Pipe =	1.81	N/A

Calculated Parameters for Outlet Pipe w/ Flow Restriction Pla

User Input: Emergency Spillway (Rectangular or Trapezoidal)

Spillway Invert Stage=	10.13	ft (relative to basin bottom at Stage = 0 ft)	Spillway Design Flow Depth=	1.51	feet
Spillway Crest Length =	20.00	feet	Stage at Top of Freeboard =	13.13	feet
Spillway End Slopes =	4.00	H:V	Basin Area at Top of Freeboard =	1.32	acres
Freeboard above Max Water Surface =	1.49	feet	Basin Volume at Top of Freeboard =	8.05	acre-ft

Calculated Parameters for Spillway

micropool = 0 = 5743.90

Routed Hydrograph Results

The user can override the default CUHP hydrographs and runoff volumes by entering new values in the Inflow Hydrographs table (Columns W through AF)

Design Storm Return Period =	WQCV	EURV	2 Year	5 Year	10 Year	25 Year	50 Year	100 Year
One-Hour Rainfall Depth (in) =	N/A	N/A	1.19	1.50	1.75	2.00	2.25	2.52
CUHP Runoff Volume (acre-ft) =	0.827	2.651	2.510	3.521	4.403	5.541	6.487	7.671
User Override Inflow Hydrograph Volume (acre-ft) =	N/A	N/A	4.057	5.655	8.290	11.856	14.864	18.552
CUHP Predevelopment Peak Q (cfs) =	N/A	N/A	5.0	13.5	20.5	36.5	45.7	58.2
OPTIONAL Override Predevelopment Peak Q (cfs) =	N/A	N/A						
Predevelopment Unit Peak Flow, q (cfs/acre) =	N/A	N/A	0.11	0.30	0.46	0.81	1.02	1.29
Peak Inflow Q (cfs) =	N/A	N/A	41.0	59.5	73.2	94.9	111.3	131.4
Peak Outflow Q (cfs) =	0.4	2.1	2.3	3.9	25.0	40.3	41.5	43.7
Ratio Peak Outflow to Predevelopment Q =	N/A	N/A	N/A	0.3	1.2	1.1	0.9	0.8
Structure Controlling Flow =	Vertical Orifice 1	Vertical Orifice 1	Vertical Orifice 1	Overflow Weir 1	Overflow Weir 1	Outlet Plate 1	Outlet Plate 1	Outlet Plate 1
Max Velocity through Grate 1 (fps) =	N/A	N/A	N/A	0.0	0.7	1.1	1.1	1.2
Max Velocity through Grate 2 (fps) =	N/A	N/A	N/A	N/A	N/A	N/A	N/A	N/A
Time to Drain 97% of Inflow Volume (hours) =	39	54	59	62	58	53	49	44
Time to Drain 99% of Inflow Volume (hours) =	**41**	58	65	70	68	66	64	62
Maximum Ponding Depth (ft) =	3.40	5.40	5.86	7.13	7.57	7.80	8.25	9.04
Area at Maximum Ponding Depth (acres) =	0.78	0.99	1.02	1.10	1.13	1.15	1.18	1.23
Maximum Volume Stored (acre-ft) =	0.834	2.659	3.122	4.468	4.959	5.221	5.745	6.698

DETENTION BASIN STAGE-STORAGE TABLE BUILDER

MHFD-Detention, Version 4.02 (February 2020)

Project: **The Hills at Lorson Ranch**

Basin ID: **Pond C2.2-asbuilt**

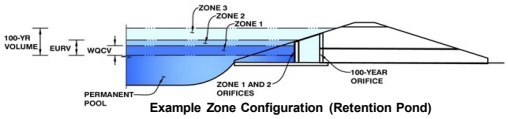

Example Zone Configuration (Retention Pond)

micropool = 0 = 5743.90

Watershed Information

Selected BMP Type =	**EDB**	
Watershed Area =	45.00	acres
Watershed Length =	2,500	ft
Watershed Length to Centroid =	1,200	ft
Watershed Slope =	0.045	ft/ft
Watershed Imperviousness =	55.00%	percent
Percentage Hydrologic Soil Group A =	0.0%	percent
Percentage Hydrologic Soil Group B =	95.0%	percent
Percentage Hydrologic Soil Groups C/D =	5.0%	percent
Target WQCV Drain Time =	40.0	hours
Location for 1-hr Rainfall Depths =	User Input	

After providing required inputs above including 1-hour rainfall depths, click 'Run CUHP' to generate runoff hydrographs using the embedded Colorado Urban Hydrograph Procedure.

			Optional User Overrides	
Water Quality Capture Volume (WQCV) =	0.827	acre-feet		acre-feet
Excess Urban Runoff Volume (EURV) =	2.651	acre-feet		acre-feet
2-yr Runoff Volume (P1 = 1.19 in.) =	2.510	acre-feet	1.19	inches
5-yr Runoff Volume (P1 = 1.5 in.) =	3.521	acre-feet	1.50	inches
10-yr Runoff Volume (P1 = 1.75 in.) =	4.403	acre-feet	1.75	inches
25-yr Runoff Volume (P1 = 2 in.) =	5.541	acre-feet	2.00	inches
50-yr Runoff Volume (P1 = 2.25 in.) =	6.487	acre-feet	2.25	inches
100-yr Runoff Volume (P1 = 2.52 in.) =	7.671	acre-feet	2.52	inches
500-yr Runoff Volume (P1 = 3.14 in.) =	10.104	acre-feet		inches
Approximate 2-yr Detention Volume =	2.035	acre-feet		
Approximate 5-yr Detention Volume =	2.778	acre-feet		
Approximate 10-yr Detention Volume =	3.600	acre-feet		
Approximate 25-yr Detention Volume =	3.912	acre-feet		
Approximate 50-yr Detention Volume =	4.081	acre-feet		
Approximate 100-yr Detention Volume =	4.507	acre-feet		

Define Zones and Basin Geometry

Zone 1 Volume (WQCV) =	0.827	acre-feet
Zone 2 Volume (EURV - Zone 1) =	1.824	acre-feet
Zone 3 (100yr + 1 / 2 WQCV - Zones 1 & 2) =	2.269	acre-feet
Total Detention Basin Volume =	4.920	acre-feet
Initial Surcharge Volume (ISV) =	user	ft^3
Initial Surcharge Depth (ISD) =	user	ft
Total Available Detention Depth (H_{total}) =	user	ft
Depth of Trickle Channel (H_{TC}) =	user	ft
Slope of Trickle Channel (S_{TC}) =	user	ft/ft
Slopes of Main Basin Sides (S_{main}) =	user	H:V
Basin Length-to-Width Ratio ($R_{L/W}$) =	user	
Initial Surcharge Area (A_{ISV}) =	user	ft^2
Surcharge Volume Length (L_{ISV}) =	user	ft
Surcharge Volume Width (W_{ISV}) =	user	ft
Depth of Basin Floor (H_{FLOOR}) =	user	ft
Length of Basin Floor (L_{FLOOR}) =	user	ft
Width of Basin Floor (W_{FLOOR}) =	user	ft
Area of Basin Floor (A_{FLOOR}) =	user	ft^2
Volume of Basin Floor (V_{FLOOR}) =	user	ft^3
Depth of Main Basin (H_{MAIN}) =	user	ft
Length of Main Basin (L_{MAIN}) =	user	ft
Width of Main Basin (W_{MAIN}) =	user	ft
Area of Main Basin (A_{MAIN}) =	user	ft^2
Volume of Main Basin (V_{MAIN}) =	user	ft^3
Calculated Total Basin Volume (V_{total}) =	**user**	acre-feet

Depth Increment = 0.20 ft

Stage - Storage Description	Stage (ft)	Optional Override Stage (ft)	Length (ft)	Width (ft)	Area (ft^2)	Optional Override Area (ft^2)	Area (acre)	Volume (ft^3)	Volume (ac-ft)
Top of Micropool	--	0.00	--	--	--	40	0.001		
5744.33	--	0.43	--	--	--	50	0.001	19	0.000
5745	--	1.10	--	--	--	1,150	0.026	421	0.010
5746	--	2.10	--	--	--	9,555	0.219	5,774	0.133
5747	--	3.10	--	--	--	31,802	0.730	26,452	0.607
5748	--	4.10	--	--	--	39,497	0.907	62,102	1.426
5749	--	5.10	--	--	--	42,329	0.972	103,015	2.365
5750	--	6.10	--	--	--	45,083	1.035	146,721	3.368
5751	--	7.10	--	--	--	47,841	1.098	193,183	4.435
5752	--	8.10	--	--	--	50,961	1.170	242,584	5.569
5753	--	9.10	--	--	--	53,844	1.236	294,986	6.772
5754	--	10.10	--	--	--	57,500	1.320	350,658	8.050

Pond C2.2 Developed Inflow Hydrograph---- asbuilt Pond C3 outflow + C5 Basin + C7 Basin

				2yr			5yr			10yr			25yr			50yr			100yr			500yr
		2 Year	CUHP	Combined	5 Year	CUHP	Combined	10 Year	CUHP	Combined	25 Year	CUHP	Combined	50 Year	CUHP	Combined	100 Year	CUHP	Combined	500 Year	CUHP	Combined
Time [hr]	Time [min]	Pond C3 Outflow2 - [cfs]	2 Year [cfs]	Hydrograph	Pond C3 Outflow2 - [cfs]	5 Year [cfs]	Hydrograph	Ponc C3 Outflow2 - [cfs]	10 Year [cfs]	Hydrograph	Pond C3 Outflow2 - [cfs]	25 Year [cfs]	Hydrograph	Pond C3 Outflow2 - [cfs]	50 Year [cfs]	Hydrograph	Pond C3 Outflow2 - [cfs]	100 Year [cfs]	Hydrograph	Pond C3 Outflow2 - [cfs]	500 Year [cfs]	Hydrograph
0.00	0.00	0.00	0.00	0.00	0.00	0.00	0.00	0.00	0.00	0.00	0.00	0.00	0.00	0.02	0.00	0.02	0.02	0.00	0.02	0.03	0.00	0.03
0.08	5.00	0.03	0.00	0.03	0.03	0.00	0.03	0.03	0.00	0.03	0.03	0.00	0.03	0.04	0.00	0.04	0.03	0.00	0.03	0.05	0.00	0.05
0.17	10.00	0.07	0.00	0.07	0.08	0.00	0.08	0.08	0.00	0.08	0.07	0.00	0.07	0.08	0.42	0.50	0.08	0.04	0.12	0.09	1.36	1.45
0.25	15.00	0.11	3.74	3.85	0.12	6.11	6.23	0.13	7.57	7.70	0.11	5.09	5.20	0.12	6.38	6.50	0.12	6.20	6.32	0.13	9.01	9.14
0.33	20.00	0.14	13.60	13.74	0.16	18.00	18.16	0.16	21.92	22.08	0.15	13.38	13.53	0.15	15.61	15.76	0.15	16.68	16.83	0.17	22.29	22.46
0.42	25.00	0.17	31.11	31.28	0.19	45.07	45.26	0.51	57.54	58.05	0.18	30.50	30.68	0.23	35.87	36.10	0.37	39.63	40.00	1.70	57.77	59.47
0.50	30.00	0.23	40.82	41.05	1.23	58.25	59.48	1.97	71.19	73.16	1.69	76.90	78.59	2.18	91.05	93.23	2.61	102.55	105.16	3.35	136.67	140.02
0.58	35.00	0.87	38.60	39.47	2.11	53.89	56.00	2.59	65.04	67.63	2.78	92.11	94.89	3.23	108.06	111.29	3.68	127.72	131.40	4.34	166.67	171.01
0.67	40.00	1.68	33.84	35.52	2.54	46.24	48.78	3.04	55.88	58.92	3.52	88.47	91.99	3.95	103.22	107.17	4.39	122.26	126.65	5.05	158.77	163.82
0.75	45.00	2.03	28.43	30.46	2.83	39.40	42.23	3.45	48.41	51.86	4.08	77.76	81.84	4.49	90.67	95.16	4.93	110.23	115.16	18.15	143.17	161.32
0.83	50.00	2.27	23.82	26.09	3.07	33.85	36.92	3.84	41.10	44.94	4.51	69.49	74.00	4.91	81.04	85.95	6.77	98.35	105.12	29.80	127.67	157.47
0.92	55.00	2.46	20.11	22.57	3.28	28.41	31.69	4.17	34.74	38.91	4.86	58.63	63.49	5.26	68.45	73.71	23.46	85.07	108.53	31.17	110.43	141.60
1.00	60.00	2.61	17.63	20.24	3.48	24.74	28.22	4.46	30.90	35.36	5.15	48.90	54.05	14.42	57.23	71.65	29.32	73.51	102.83	32.44	95.81	128.25
1.08	65.00	2.73	15.89	18.62	3.68	22.20	25.88	4.71	28.16	32.87	8.14	42.78	50.92	27.08	50.23	77.31	29.85	66.37	96.22	33.69	86.66	120.35
1.17	70.00	2.82	13.63	16.45	3.85	19.91	23.76	4.93	25.58	30.51	17.52	36.41	53.93	29.18	42.84	72.02	30.27	55.34	85.61	50.30	72.60	122.90
1.25	75.00	2.90	11.46	14.36	4.00	17.10	21.10	5.13	23.01	28.14	26.03	30.66	56.69	29.49	36.16	65.65	30.60	44.97	75.57	64.86	59.42	124.28
1.33	80.00	2.97	9.51	12.48	4.14	14.14	18.28	5.56	19.48	25.04	29.01	24.76	53.77	29.74	29.17	58.91	30.87	34.93	65.80	70.54	46.13	116.67
1.42	85.00	3.03	7.93	10.96	4.26	11.69	15.95	10.03	15.58	25.61	29.20	19.60	48.80	29.95	23.03	52.98	31.09	26.23	57.32	70.07	34.55	104.62
1.50	90.00	3.08	6.97	10.05	4.38	10.29	14.67	14.87	13.16	28.03	29.36	14.82	44.18	30.14	17.32	47.46	31.29	19.11	50.40	66.81	25.36	92.17
1.58	95.00	3.14	6.50	9.64	4.48	9.58	14.06	18.58	11.74	30.32	29.51	11.96	41.47	30.32	13.95	44.27	31.47	14.90	46.37	63.07	19.87	82.94
1.67	100.00	3.19	6.27	9.46	4.57	8.56	13.13	21.01	10.76	31.77	29.64	10.21	39.85	30.47	11.85	42.32	31.63	12.39	44.02	59.93	16.55	76.48
1.75	105.00	3.24	6.14	9.38	4.65	7.72	12.37	22.39	10.05	32.44	29.77	9.08	38.85	30.62	10.48	41.10	31.78	10.63	42.41	57.48	14.20	71.68
1.83	110.00	3.29	6.04	9.33	4.72	7.11	11.83	22.95	9.57	32.52	29.88	8.29	38.17	30.75	9.52	40.27	31.91	9.43	41.34	55.54	12.60	68.14
1.92	115.00	3.33	5.34	8.67	4.78	6.67	11.45	22.82	8.98	31.80	29.98	7.79	37.77	30.88	8.90	39.78	32.05	8.58	40.63	54.02	11.45	65.47
2.00	120.00	3.36	4.68	8.04	4.84	6.16	11.00	21.99	8.10	30.09	30.08	7.44	37.52	30.99	8.45	39.44	32.16	7.98	40.14	52.61	10.64	63.25
2.08	125.00	3.39	3.59	6.98	4.88	4.72	9.60	20.59	6.16	26.75	30.15	5.71	35.86	31.08	6.47	37.55	32.27	6.02	38.29	51.13	8.02	59.15
2.17	130.00	3.42	2.65	6.07	4.91	3.44	8.35	18.90	4.45	23.35	30.17	4.14	34.31	31.16	4.68	35.84	32.36	4.36	36.72	49.70	5.80	55.50
2.25	135.00	3.44	1.95	5.39	4.93	2.52	7.45	17.14	3.22	20.36	30.11	3.01	33.12	31.23	3.40	34.63	32.43	3.19	35.62	48.36	4.22	52.58
2.33	140.00	3.46	1.42	4.88	4.94	1.83	6.77	15.43	2.34	17.77	29.99	2.20	32.19	31.28	2.48	33.76	32.50	2.35	34.85	47.13	3.11	50.24
2.42	145.00	3.48	1.02	4.50	4.96	1.28	6.24	13.86	1.67	15.53	29.83	1.56	31.39	31.33	1.75	33.08	32.57	1.68	34.25	46.02	2.22	48.24
2.50	150.00	3.49	0.71	4.20	4.96	0.88	5.84	12.47	1.17	13.64	29.63	1.10	30.73	31.37	1.23	32.60	32.62	1.18	33.80	45.01	1.56	46.57
2.58	155.00	3.51	0.49	4.00	4.97	0.61	5.58	11.27	0.82	12.09	29.41	0.79	30.20	31.37	0.88	32.25	32.66	0.84	33.50	44.09	1.11	45.20
2.67	160.00	3.52	0.31	3.83	4.97	0.41	5.38	10.29	0.53	10.82	29.17	0.52	29.69	31.31	0.59	31.90	32.70	0.56	33.26	43.24	0.74	43.98
2.75	165.00	3.54	0.17	3.71	4.98	0.24	5.22	9.50	0.31	9.81	28.92	0.32	29.24	31.18	0.35	31.53	32.74	0.34	33.08	42.46	0.44	42.90
2.83	170.00	3.55	0.08	3.63	4.98	0.12	5.10	8.88	0.15	9.03	23.76	0.16	23.92	31.02	0.18	31.20	32.77	0.17	32.94	41.74	0.22	41.96
2.92	175.00	3.56	0.03	3.59	4.99	0.04	5.03	8.38	0.05	8.43	19.25	0.05	19.30	30.82	0.06	30.88	32.79	0.06	32.85	41.08	0.07	41.15
3.00	180.00	3.57	0.00	3.57	4.99	0.00	4.99	7.97	0.00	7.97	16.09	0.00	16.09	30.61	0.00	30.61	32.81	0.00	32.81	40.45	0.00	40.45
3.08	185.00	3.58		3.58	4.99	0.00	4.99	7.64	0.00	7.64	13.83	0.00	13.83	30.37	0.00	30.37	32.78	0.00	32.78	39.85	0.00	39.85
3.17	190.00	3.59		3.59	5.00		5.00	7.36		7.36	12.17	0.00	12.17	30.13	0.00	30.13	32.70	0.00	32.70	39.28	0.00	39.28
3.25	195.00	3.61		3.61	5.00		5.00	7.12		7.12	10.92	0.00	10.92	29.87	0.00	29.87	32.56		32.56	38.72	0.00	38.72
3.33	200.00	3.62		3.62	5.00		5.00	6.92		6.92	9.97	0.00	9.97	29.61	0.00	29.61	32.39		32.39	38.17	0.00	38.17
3.42	205.00	3.62		3.62	5.00		5.00	6.75		6.75	9.22	0.00	9.22	29.34	0.00	29.34	32.19		32.19	37.64	0.00	37.64
3.50	210.00	3.63		3.63	5.01		5.01	6.60		6.60	8.63		8.63	29.07	0.00	29.07	31.98		31.98	36.74	0.00	36.74
3.58	215.00	3.64		3.64	5.01		5.01	6.46		6.46	8.15		8.15	27.11		27.11	31.75		31.75	35.17	0.00	35.17
3.67	220.00	3.65		3.65	5.01		5.01	6.35		6.35	7.76		7.76	21.44		21.44	31.51		31.51	33.62	0.00	33.62
3.75	225.00	3.66		3.66	5.01		5.01	6.24		6.24	7.44		7.44	17.58		17.58	31.27		31.27	33.30	0.00	33.30
3.83	230.00	3.67		3.67	5.01		5.01	6.15		6.15	7.17		7.17	14.87		14.87	31.02		31.02	33.12	0.00	33.12
3.92	235.00	3.67		3.67	5.02		5.02	6.06		6.06	6.94		6.94	12.90		12.90	30.76		30.76	32.92	0.00	32.92
4.00	240.00	3.68		3.68	5.02		5.02	5.98		5.98	6.74		6.74	11.44		11.44	30.50		30.50	32.70		32.70
4.08	245.00	3.69		3.69	5.02		5.02	5.91		5.91	6.58		6.58	10.33		10.33	30.24		30.24	32.47		32.47
4.17	250.00	3.69		3.69	5.02		5.02	5.84		5.84	6.43		6.43	9.48		9.48	29.98		29.98	32.24		32.24
4.25	255.00	3.70		3.70	5.02		5.02	5.78		5.78	6.30		6.30	8.81		8.81	29.71		29.71	31.99		31.99
4.33	260.00	3.70		3.70	5.02		5.02	5.72		5.72	6.19		6.19	8.27		8.27	29.44		29.44	31.75		31.75
4.42	265.00	3.71		3.71	5.02		5.02	5.67		5.67	6.08		6.08	7.83		7.83	29.17		29.17	31.50		31.50
4.50	270.00	3.71		3.71	5.02		5.02	5.62		5.62	5.99		5.99	7.47		7.47	28.90		28.90	31.24		31.24
4.58	275.00	3.72		3.72	5.02		5.02	5.57		5.57	5.91		5.91	7.18		7.18	23.18		23.18	30.99		30.99
4.67	280.00	3.72		3.72	5.02		5.02	5.53		5.53	5.83		5.83	6.93		6.93	18.73		18.73	30.73		30.73
4.75	285.00	3.72		3.72	5.02		5.02	5.49		5.49	5.76		5.76	6.71		6.71	15.63		15.63	30.47		30.47
4.83	290.00	3.73		3.73	5.02		5.02	5.45		5.45	5.70		5.70	6.53		6.53	13.41		13.41	30.21		30.21
4.92	295.00	3.73		3.73	5.02		5.02	5.41		5.41	5.64		5.64	6.37		6.37	11.78		11.78	29.95		29.95
5.00	300.00	3.73		3.73	5.02		5.02	5.38		5.38	5.58		5.58	6.23		6.23	10.55		10.55	29.68		29.68
5.08	305.00	3.73		3.73	5.01		5.01	5.34		5.34	5.53		5.53	6.11		6.11	9.61		9.61	29.41		29.41
5.17	310.00	3.73		3.73	5.01		5.01	5.32		5.32	5.49		5.49	6.00		6.00	8.87		8.87	29.14		29.14
5.25	315.00	3.74		3.74	5.01		5.01	5.30		5.30	5.44		5.44	5.90		5.90	8.29		8.29	28.58		28.58
5.33	320.00	3.74		3.74	5.01		5.01	5.28		5.28	5.40		5.40	5.82		5.82	7.82		7.82	22.34		22.34
5.42	325.00	3.74		3.74	5.01		5.01	5.28		5.28	5.37		5.37	5.74		5.74	7.43		7.43	18.12		18.12
5.50	330.00	3.74		3.74	5.00		5.00	5.27		5.27	5.33		5.33	5.67		5.67	7.11		7.11	15.17		15.17
5.58	335.00	3.74		3.74	5.00		5.00	5.27		5.27	5.31		5.31	5.60		5.60	6.85		6.85	13.05		13.05
5.67	340.00	3.74		3.74	5.00		5.00	5.27		5.27	5.29		5.29	5.54		5.54	6.62		6.62	11.48		11.48
5.75	345.00	3.74		3.74	4.99		4.99	5.26		5.26	5.28		5.28	5.49		5.49	6.43		6.43	10.30		10.30

MAINTENANCE ACCESS ROAD
NO SCALE

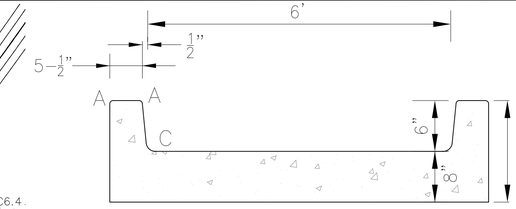

CONCRETE LOW FLOW CHANNEL DETAIL
NO SCALE

LENGTH FOR RADII
A = 1/2"
C = 1-1/2"

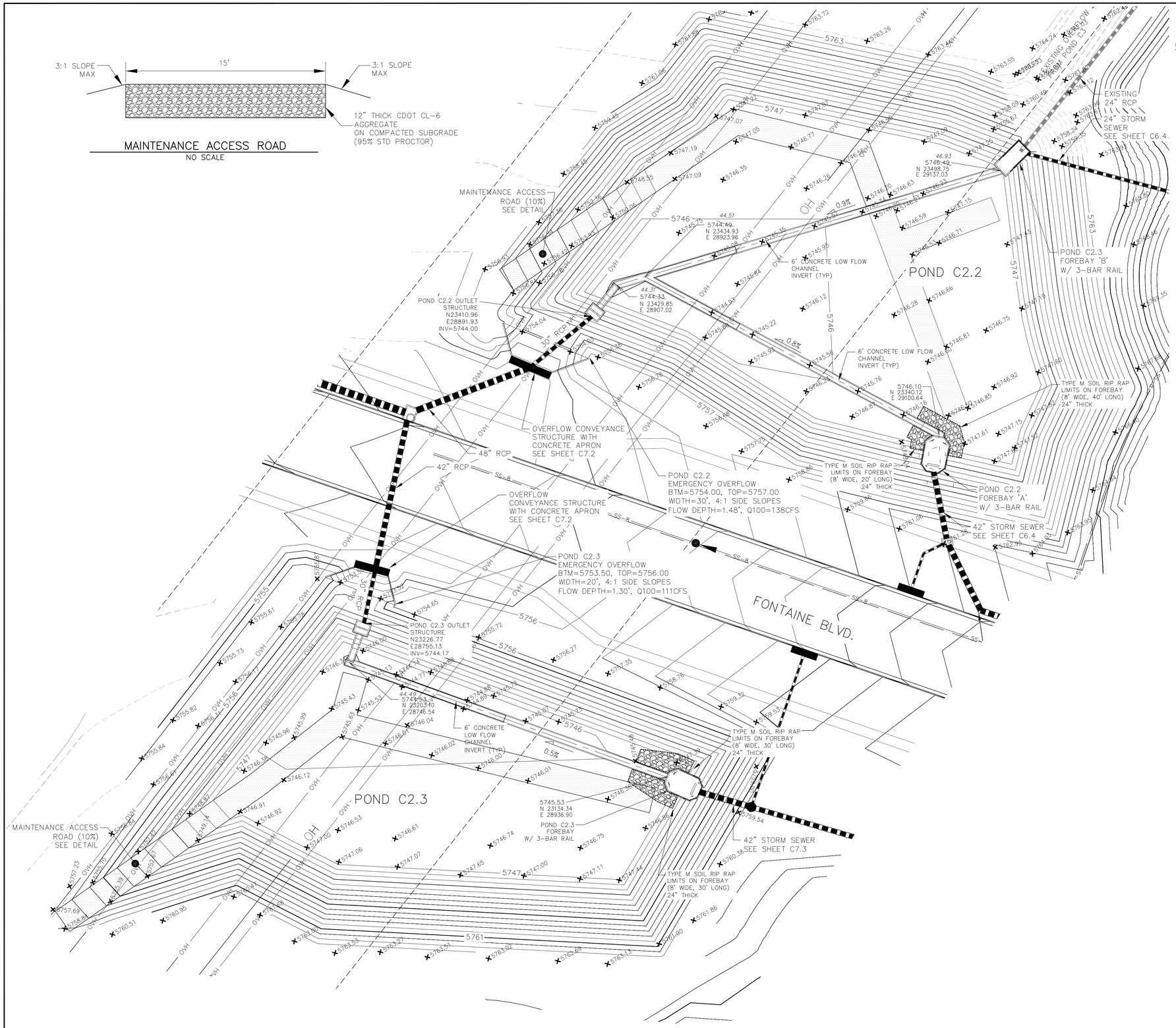

AS-BUILT
DATE: 09/30/2022

SCALE: 1"=30'

CORE ENGINEERING GROUP
15004 1ST AVENUE S.
BURNSVILLE, MN 55306
PH: 719.570.1100
CONTACT: RICHARD L. SCHINDLER, P.E.
EMAIL: Rich@ceg1.com

NO.	DESCRIPTION	DATE

PREPARED FOR:
LORSON, LLC
212 N. WAHSATCH AVE, SUITE 301
COLORADO SPRINGS, COLORADO 80903
(719) 635-3200
CONTACT: JEFF MARK

PROJECT:
THE HILLS COLLECTOR STREET CONSTRUCTION
FONTAINE BLVD. GRAYLING PLY
LORSON BLVD. WILLETTE DR. LAMPREY DR
COLORADO SPRINGS, COLORADO

DRAWN: RLS
DESIGNED: RLS
CHECKED: RLS

POND C2.2 & C2.3 FOREBAY, LOW FLOW CHANNEL AND OUTLET STRUCTURE LAYOUT

COLORADO REGISTERED PROFESSIONAL ENGINEER
RICHARD L. SCHINDLER
33997
11-12-2020

DATE: NOV 12, 2020

PROJECT NO. 100.061

SHEET NUMBER C9.5

TOTAL SHEETS: 58

POINT TABLE (FOREBAY)				
NUMBER	NORTHING	EASTING	ELEVATION	NOTES
1	23338.41	29100.32	5746.50	FOREBAY BOTTOM
2	23317.59	29097.36	5746.62	FOREBAY BOTTOM, INV 42"=5747.70

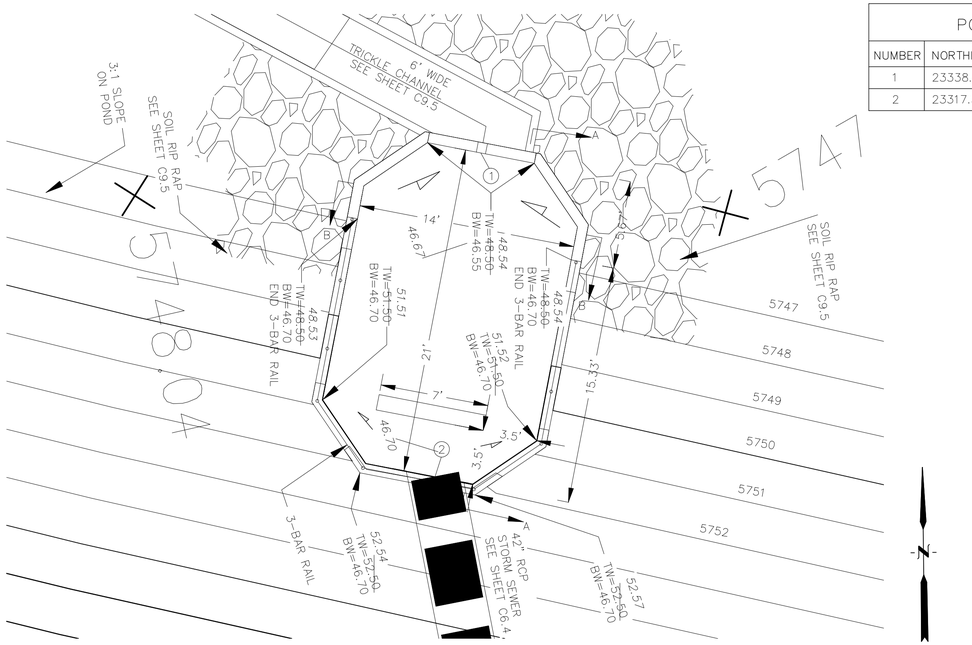

POND C2.2 – FOREBAY 'A' LAYOUT
SCALE: 1"=5'

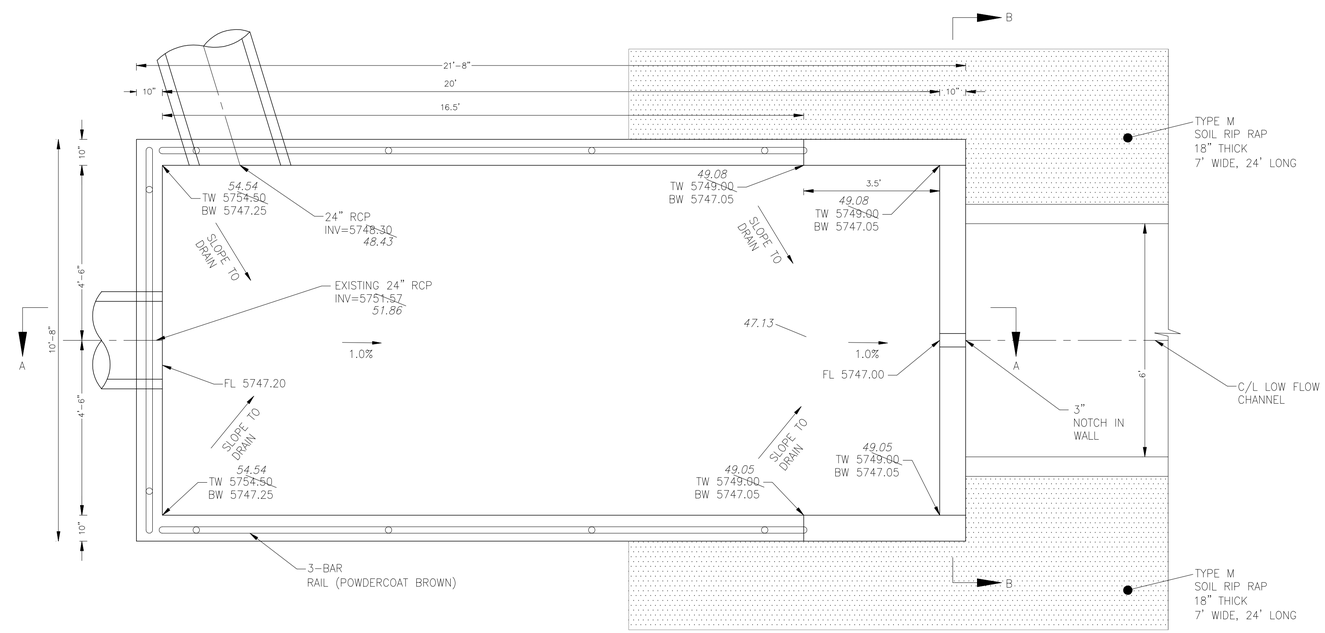

POND C2.2 – FOREBAY 'B' LAYOUT
NO SCALE

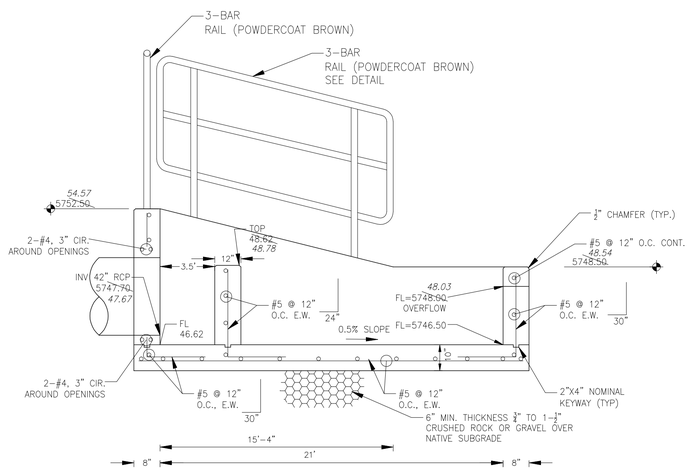

FOREBAY 'A' SECTION A–A
NO SCALE

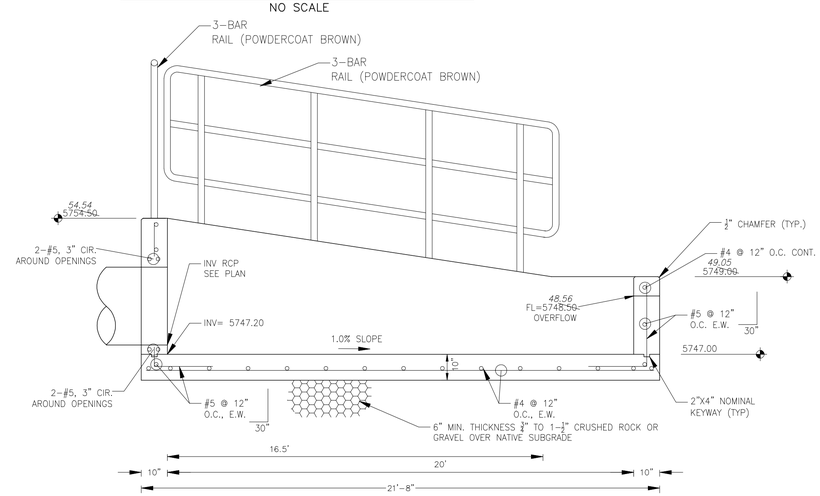

FOREBAY 'B' SECTION A–A
NO SCALE

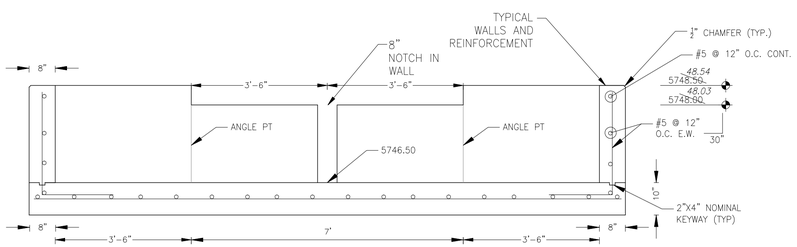

FOREBAY 'A' SECTION B–B
NO SCALE

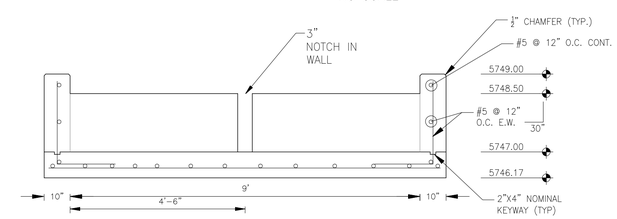

FOREBAY 'B' SECTION B–B
NO SCALE

NOTE: ALL CONCRETE FOR FOREBAY SHALL BE CDOT TYPE D

AS-BUILT
DATE: 09/30/2022

CORE ENGINEERING GROUP
15004 1ST AVENUE S.
BURNSVILLE, MN 55306
PH: 763.315.1100
CONTACT: RICHARD L. SCHINDLER, P.E.
EMAIL: Rich@ceg1.com

NO.	DESCRIPTION	DATE

PREPARED FOR:
LORSON, LLC
212 N. WAHSATCH AVE, SUITE 301
COLORADO SPRINGS, COLORADO 80903
(719) 635-3200
CONTACT: JEFF MARK

PROJECT:
THE HILLS COLLECTOR STREET CONSTRUCTION
FONTAINE BLVD - GRAYLING DR
LORSON BLVD-WALLE'E DR-LAMPREY DR
COLORADO SPRINGS, COLORADO

DRAWN: RLS
DESIGNED: RLS
CHECKED: RLS

POND C2.2
FOREBAY DETAILS

COLORADO REGISTERED PROFESSIONAL ENGINEER
RICHARD L. SCHINDLER
33997
11-12-2020

DATE: NOV 12, 2020
PROJECT NO. 100.061
SHEET NUMBER C9.6
TOTAL SHEETS: 58

NOTES
1. ALL SPOT ELEVATIONS ARE FLOW LINE UNLESS OTHERWISE NOTED.
2. SEE EARLY GRADING PLAN FOR GRADING INFORMATION.
3. ALL STORM SEWER SHALL BE CLASS III RCP.
4. ALL MHs SHALL BE TYPE 1 UNLESS OTHERWISE NOTED.

1 CURVE DATA ID

2 PEDESTRIAN RAMP, SEE SHEET C10.1

3 CURB/GUTTER FLOW LINE POINTS

50 25 0 50 100
SCALE: 1"=50'

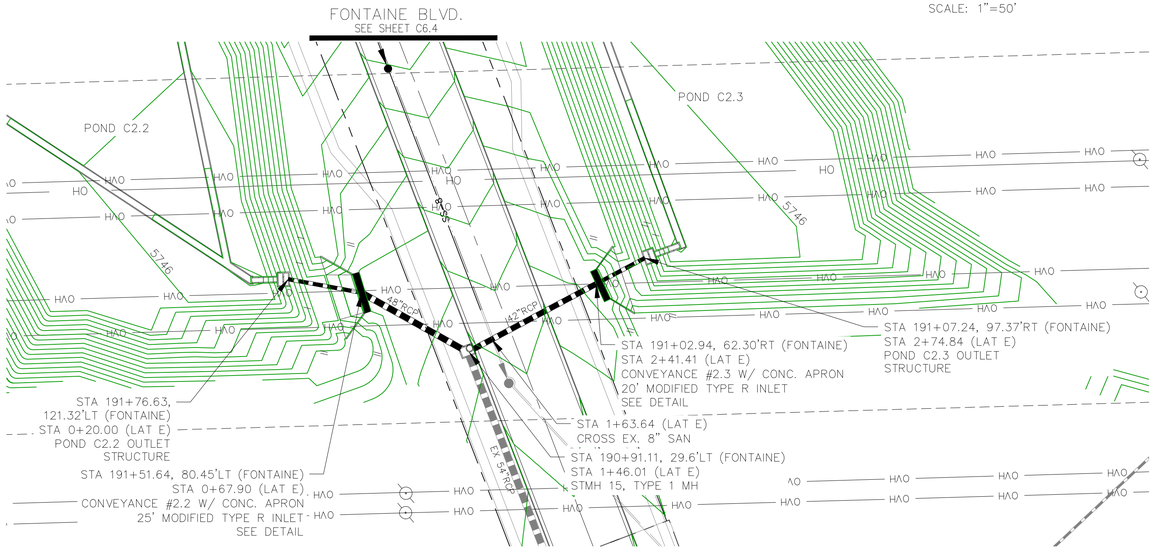

STORM LATERAL 'E'

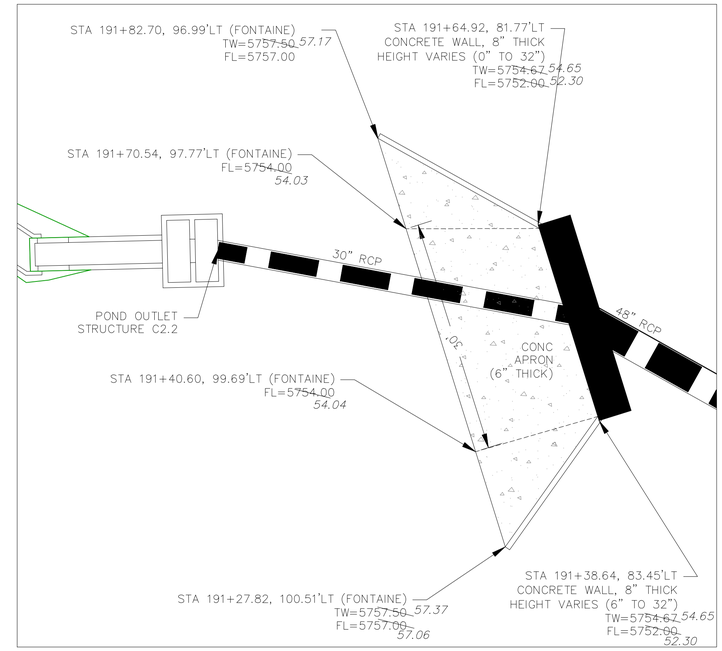

CONVEYANCE STRUCTURE #2.2

SCALE: 1"=10'

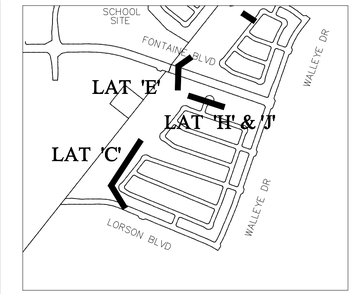

KEY MAP

CONVEYANCE STRUCTURE #2.2 NOTES:

1. 25' CDOT TYPE R INLET WITH MODIFIED THROAT OPENING
2. THROAT OPENING = 24"
3. EXTEND 1.25" GALVANIZED STEEL ROD SUPPORTS (TYPE R INLET) TO ACCOMODATE 24" THROAT OPENING
4. CONCRETE APRON TO BE REINFORCED WITH NO. 4 REBAR, 24" O.C. BOTH WAYS. REBAR TO EXTEND INTO CONCRETE WALL W/ NO. 4 "L" BARS, 18" O.C.
5. CONCRETE WALLS SHALL HAVE A MINIMUM OF TWO HORIZONTAL NO. 4 BARS

6. 24" THROAT OPENING TO INCLUDE SAFETY GRATE.

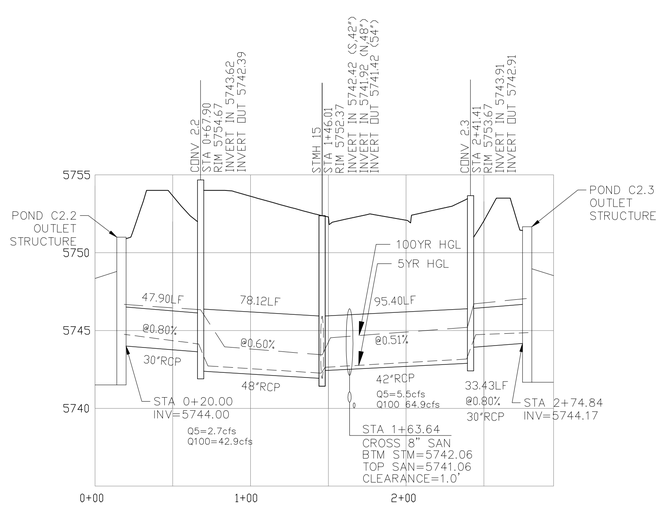

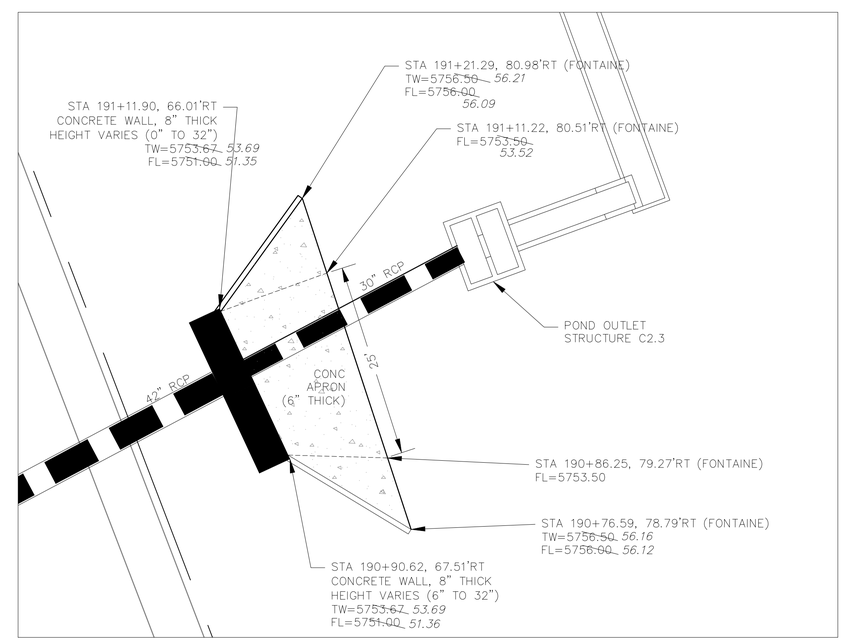

CONVEYANCE STRUCTURE #2.3

SCALE: 1"=10'

CONVEYANCE STRUCTURE #2.3 NOTES:

1. 20' CDOT TYPE R INLET WITH MODIFIED THROAT OPENING
2. THROAT OPENING = 24"
3. EXTEND 1.25" GALVANIZED STEEL ROD SUPPORTS (TYPE R INLET) TO ACCOMODATE 24" THROAT OPENING
4. CONCRETE APRON TO BE REINFORCED WITH NO. 4 REBAR, 24" O.C. BOTH WAYS. REBAR TO EXTEND INTO CONCRETE WALL W/ NO. 4 "L" BARS.
5. CONCRETE WALLS SHALL HAVE A MINIMUM OF TWO HORIZONTAL NO. 4 BARS

6. 24" THROAT OPENING TO INCLUDE SAFETY GRATE.

AS-BUILT
DATE: 09/30/2022

CORE ENGINEERING GROUP
15004 1ST AVENUE S.
BURNSVILLE, MN 55306
PH: 719.370.1100
CONTACT: RICHARD L. SCHINDLER, P.E.
EMAIL: Rich@ceg3.com

NO.	DESCRIPTION	DATE
1.	RAISE SITE 1' EAST OF POWERLINES	JAN 12, 2021

PREPARED FOR:
LORSON, LLC
212 N. WAHSATCH AVE, SUITE 301
COLORADO SPRINGS, COLORADO 80903
(719) 635-3200
CONTACT: JEFF MARK

PROJECT:
THE HILLS COLLECTOR STREET CONSTRUCTION
FONTAINE BLVD. - GRAYLING DR.
LORSON BLVD.-WALLEYE DR-LAMPREY DR
COLORADO SPRINGS, COLORADO

DRAWN: RLS
DESIGNED: RLS
CHECKED: RLS

STREET & STORM SEWER PLAN/PROFILE
STORM LATERAL 'E'
CONVEYANCE #2.2 & #2.3

COLORADO REGISTERED PROFESSIONAL ENGINEER
RICHARD L. SCHINDLER
33997
11-12-2020

DATE: NOV 12, 2020

PROJECT NO. 100.061

SHEET NUMBER C7.2
TOTAL SHEETS: 58

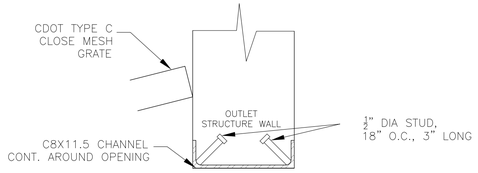

DETAIL A
NO SCALE

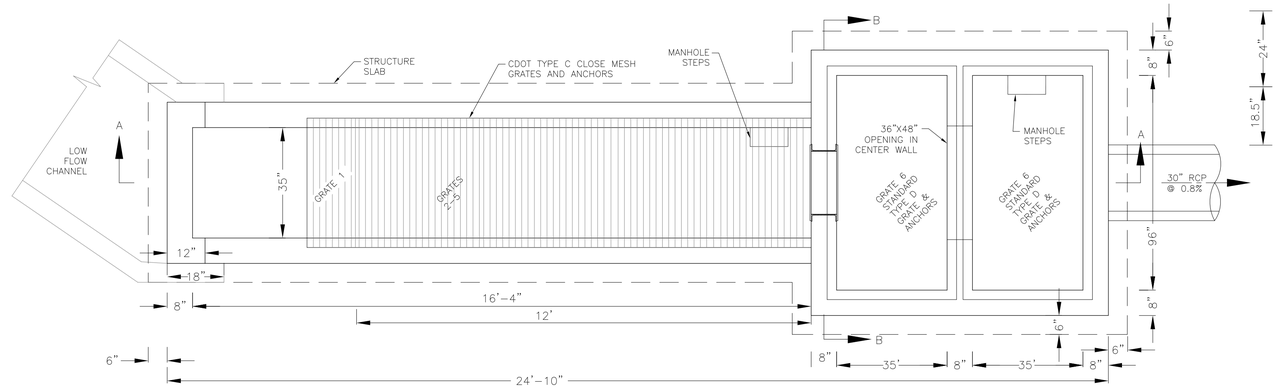

OUTLET STRUCTURE DETAIL – PLAN VIEW
NO SCALE

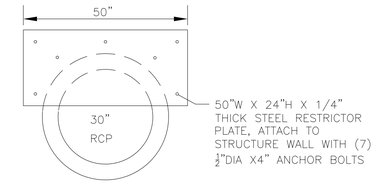

OUTLET RESTRICTOR PLATE
NO SCALE

NOTE:
AFTER CONCRETE STRUCTURE HAS BEEN POURED ALL GRATE DIMENSIONS SHALL BE FIELD VERIFIED PRIOR TO GRATE CONSTRUCTION

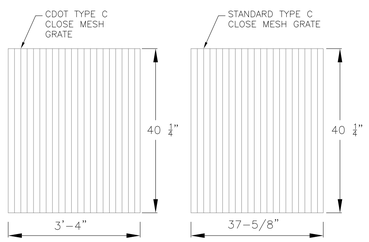

GRATE 1
NO SCALE

GRATES 2,3,4,5
NO SCALE

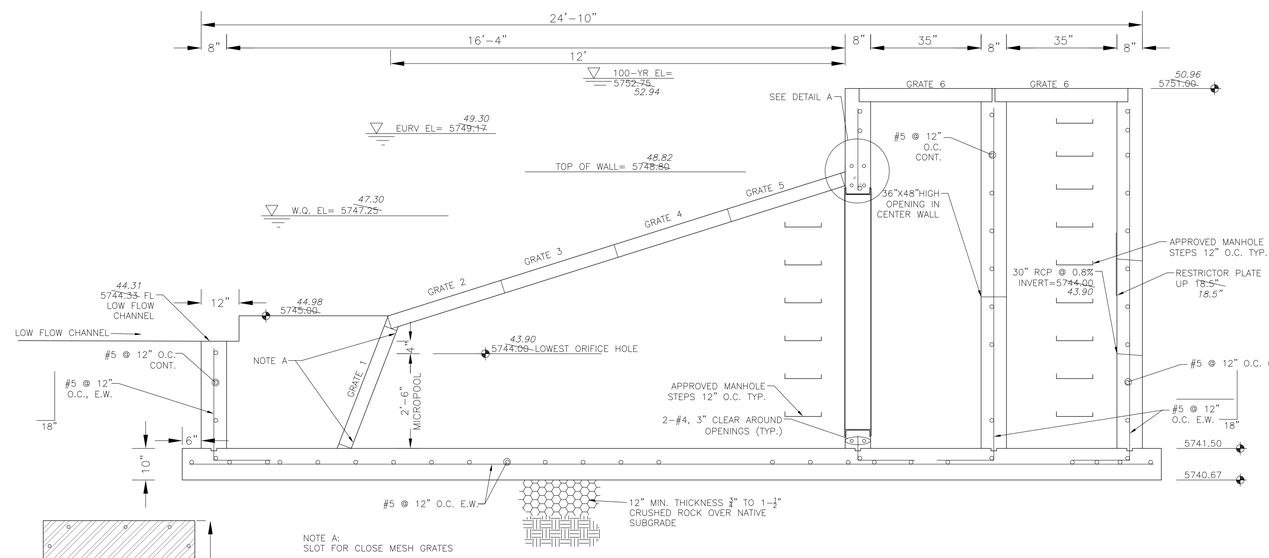

OUTLET STRUCTURE DETAIL – SECTION A–A
NO SCALE

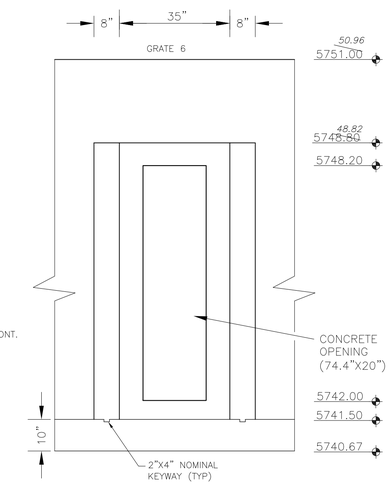

OUTLET STRUCTURE DETAIL – SECTION B–B
NO SCALE

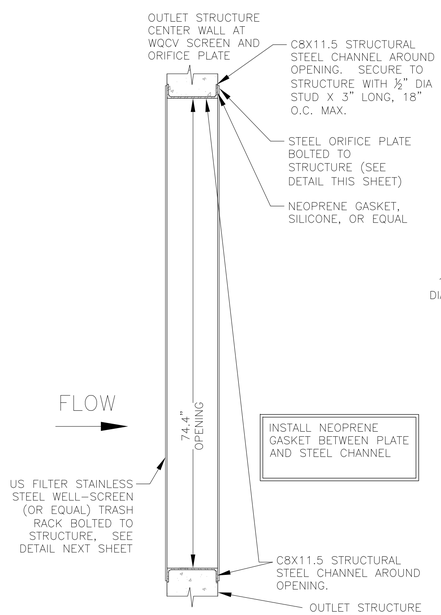

TRASH RACK DETAIL
NO SCALE

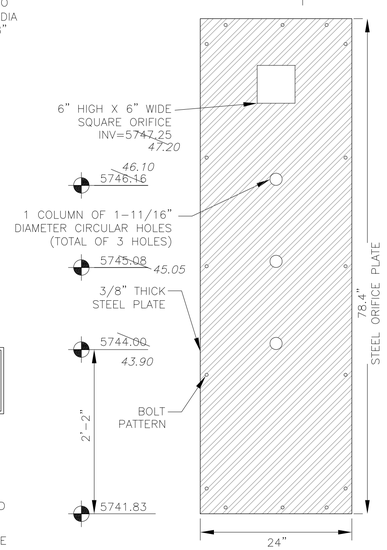

ORIFICE PLATE DETAIL
NO SCALE

OUTLET STRUCTURE, FOREBAY, AND DRAIN CHANNEL NOTES:

1. PRIOR TO CONSTRUCTION, CONTRACTOR SHALL PROVIDE SHOP DRAWINGS FOR ALL COMPONENTS OF THE OUTLET STRUCTURE.
2. GRADE 60 REINFORCING STEEL REQUIRED. SEE TABLE FOR THE MINIMUM LAP SPLICE LENGTH FOR REINFORCING BARS. ALL REINFORCING STEEL SHALL HAVE A TWO-INCH MINIMUM CLEARANCE FROM EDGE OF CONCRETE, UNLESS OTHERWISE NOTED.

BAR SIZE	#4	#5	#6
MIN. SPLICE LENGTH	1'-3"	1'-7"	2'-0"

3. CONCRETE FOR THE OUTLET STRUCTURE AND FOREBAY SHALL BE CDOT CLASS D CONCRETE.
4. CONCRETE FOR DRAIN CHANNELS SHALL BE CDOT CLASS B CONCRETE
5. EXPANSION JOINT MATERIAL SHALL MEET AASHTO SPECIFICATION M-213. EXPANSION JOINT MATERIAL SHALL BE ½" THICK, SHALL EXTEND THE FULL DEPTH OF CONTACT SURFACE AND THE JOINT SHALL BE SEALED, REFER TO DETAILS.
6. ALL EXPOSED CONCRETE CORNERS SHALL HAVE A ⅜" CHAMFER UNLESS OTHERWISE NOTED.
7. SUBGRADE TO BE 12" THICK CLEAN FILL COMPACTED TO 95% STANDARD PROCTOR DENSITY PER ASTM M698 UNDER STRUCTURE.
8. REFER TO POND DETAILS FOR PRESEDIMENTATION/FOREBAY DESIGN.
9. ENGINEER SHALL BE NOTIFIED PRIOR TO BEGINNING CONSTRUCITON OF OUTLET STRUCTURE TO SCHEDULE OBSERVATION VISITS FOR STRUCTURES.

WQCV WELL-SCREEN NOTES:

1. Well-Screen shall be stainless steel and attached by stainless steel bolts along edge of the mounting frame.

2. WQCV Well Screen
- Type of Screen: Stainless steel #93 Vee Wire (Johnson Vee Wire (tm) Stainless Steel Screen or equivalent with 60% open area)
- Screen slot opening dimension: 0.139" (Screen #93 Vee Wire Slot Opening)
- Type and Size of Support Rod: TE 0.074"X0.50"
- Spacing of Support Rod (O.C.): 1.0 Inch
- Total Screen Thickness: 0.655"
- Carbon Steel Holding Frame Type: 3/4" x 1.0" angle

AS-BUILT
DATE: 09/30/2022

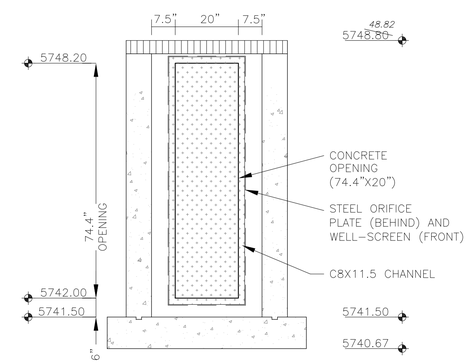

OUTLET STRUCTURE DETAIL – SECTION B–B
NO SCALE

CORE ENGINEERING GROUP
15004 1ST AVENUE S.
BURNSVILLE, MN 55306
PH: 719.570.1100
CONTACT: RICHARD L. SCHINDLER, P.E.
EMAIL: Rich@ceg.com

NO.	DESCRIPTION	DATE

PREPARED FOR:
LORSON, LLC
212 N. WAHSATCH AVE, SUITE 301
COLORADO SPRINGS, COLORADO 80903
(719) 635-3200
CONTACT: JEFF MARK

PROJECT:
THE HILLS COLLECTOR STREET CONSTRUCTION
FONTAINE BLVD. GRAYLING PK.
LORSON BLVD. WALTE PK. LAMPRY PL. DR
COLORADO SPRINGS, COLORADO

DRAWN: RLS
DESIGNED: RLS
CHECKED: RLS

POND C2.2
FULL SPECTRUM
OUTLET STRUCTURE DETAILS

COLORADO REGISTERED PROFESSIONAL ENGINEER 33997 11-12-2020

DATE: NOV 12, 2020
PROJECT NO. 100.061
SHEET NUMBER C9.13
TOTAL SHEETS: 58

DETENTION BASIN OUTLET STRUCTURE DESIGN

MHFD-Detention, Version 4.02 (February 2020)

Project: **The Hills at Lorson Ranch**

Basin ID: **Pond C2.3-asbuilt**

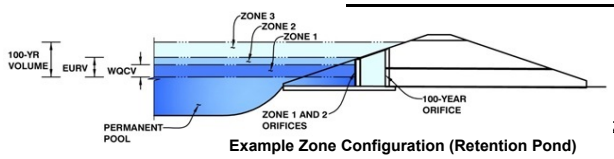

Example Zone Configuration (Retention Pond)

	Estimated Stage (ft)	Estimated Volume (ac-ft)	Outlet Type
Zone 1 (WQCV)	2.25	0.294	Orifice Plate
Zone 2 (EURV)	3.34	0.589	Rectangular Orifice
Z3 (100+1/2WQCV)	4.62	0.834	Weir&Pipe (Restrict)
Total (all zones)		1.717	

User Input: Orifice at Underdrain Outlet (typically used to drain WQCV in a Filtration BMP)

Underdrain Orifice Invert Depth =	N/A	ft (distance below the filtration media surface)	Underdrain Orifice Area =	N/A	ft^2
Underdrain Orifice Diameter =	N/A	inches	Underdrain Orifice Centroid =	N/A	feet

Calculated Parameters for Underdrain

User Input: Orifice Plate with one or more orifices or Elliptical Slot Weir (typically used to drain WQCV and/or EURV in a sedimentation BMP)

Invert of Lowest Orifice =	0.00	ft (relative to basin bottom at Stage = 0 ft)	WQ Orifice Area per Row =	6.806E-03	ft^2
Depth at top of Zone using Orifice Plate =	2.25	ft (relative to basin bottom at Stage = 0 ft)	Elliptical Half-Width =	N/A	feet
Orifice Plate: Orifice Vertical Spacing =	N/A	inches	Elliptical Slot Centroid =	N/A	feet
Orifice Plate: Orifice Area per Row =	0.98	sq. inches (diameter = 1-1/8 inches)	Elliptical Slot Area =	N/A	ft^2

Calculated Parameters for Plate

User Input: Stage and Total Area of Each Orifice Row (numbered from lowest to highest)

	Row 1 (required)	Row 2 (optional)	Row 3 (optional)	Row 4 (optional)	Row 5 (optional)	Row 6 (optional)	Row 7 (optional)	Row 8 (optional)
Stage of Orifice Centroid (ft)	0.00	0.80	1.63					
Orifice Area (sq. inches)	0.98	0.98	0.98					

	Row 9 (optional)	Row 10 (optional)	Row 11 (optional)	Row 12 (optional)	Row 13 (optional)	Row 14 (optional)	Row 15 (optional)	Row 16 (optional)
Stage of Orifice Centroid (ft)								
Orifice Area (sq. inches)								

User Input: Vertical Orifice (Circular or Rectangular)

	Zone 2 Rectangular	Not Selected			Zone 2 Rectangular	Not Selected
Invert of Vertical Orifice =	2.41	N/A	ft (relative to basin bottom at Stage = 0 ft)	Vertical Orifice Area =	0.71	N/A
Depth at top of Zone using Vertical Orifice =	3.34	N/A	ft (relative to basin bottom at Stage = 0 ft)	Vertical Orifice Centroid =	0.25	N/A
Vertical Orifice Height =	6.00	N/A	inches			
Vertical Orifice Width =	17.00		inches			

Calculated Parameters for Vertical Orifi

User Input: Overflow Weir (Dropbox with Flat or Sloped Grate and Outlet Pipe OR Rectangular/Trapezoidal Weir (and No Outlet Pipe)

	Zone 3 Weir	Not Selected			Zone 3 Weir	Not Selected
Overflow Weir Front Edge Height, Ho =	7.35	N/A	ft (relative to basin bottom at Stage = 0 ft)	Height of Grate Upper Edge, H_t =	7.35	N/A
Overflow Weir Front Edge Length =	8.00	N/A	feet	Overflow Weir Slope Length =	6.00	N/A
Overflow Weir Grate Slope =	0.00	N/A	H:V	Grate Open Area / 100-yr Orifice Area =	6.84	N/A
Horiz. Length of Weir Sides =	6.00	N/A	feet	Overflow Grate Open Area w/o Debris =	33.60	N/A
Overflow Grate Open Area % =	70%	N/A	%, grate open area/total area	Overflow Grate Open Area w/ Debris =	16.80	N/A
Debris Clogging % =	50%	N/A	%			

Calculated Parameters for Overflow We

User Input: Outlet Pipe w/ Flow Restriction Plate (Circular Orifice, Restrictor Plate, or Rectangular Orifice)

	Zone 3 Restrictor	Not Selected			Zone 3 Restrictor	Not Selected
Depth to Invert of Outlet Pipe =	0.15	N/A	ft (distance below basin bottom at Stage = 0 ft)	Outlet Orifice Area =	4.91	N/A
Outlet Pipe Diameter =	30.00	N/A	inches	Outlet Orifice Centroid =	1.25	N/A
Restrictor Plate Height Above Pipe Invert =	30.00		inches	Half-Central Angle of Restrictor Plate on Pipe =	3.14	N/A

Calculated Parameters for Outlet Pipe w/ Flow Restriction Pla

User Input: Emergency Spillway (Rectangular or Trapezoidal)

Spillway Invert Stage=	9.20	ft (relative to basin bottom at Stage = 0 ft)	Spillway Design Flow Depth=	1.17	feet
Spillway Crest Length =	20.00	feet	Stage at Top of Freeboard =	11.70	feet
Spillway End Slopes =	4.00	H:V	Basin Area at Top of Freeboard =	1.04	acres
Freeboard above Max Water Surface =	1.33	feet	Basin Volume at Top of Freeboard =	6.04	acre-ft

Calculated Parameters for Spillway

micropool = 0 = 5744.30

Routed Hydrograph Results

The user can override the default CUHP hydrographs and runoff volumes by entering new values in the Inflow Hydrographs table (Columns W through AF).

Design Storm Return Period =	WQCV	EURV	2 Year	5 Year	10 Year	25 Year	50 Year	100 Year
One-Hour Rainfall Depth (in) =	N/A	N/A	1.19	1.50	1.75	2.00	2.25	2.52
CUHP Runoff Volume (acre-ft) =	0.294	0.883	0.924	1.299	1.627	2.016	2.357	2.775
User Override Inflow Hydrograph Volume (acre-ft) =	N/A	N/A	2.831	4.148	5.891	8.181	10.069	12.414
CUHP Predevelopment Peak Q (cfs) =	N/A	N/A	2.2	5.0	7.2	11.8	14.6	18.5
OPTIONAL Override Predevelopment Peak Q (cfs) =	N/A	N/A						
Predevelopment Unit Peak Flow, q (cfs/acre) =	N/A	N/A	0.14	0.31	0.45	0.74	0.91	1.16
Peak Inflow Q (cfs) =	N/A	N/A	14.3	21.0	40.8	77.8	87.7	97.1
Peak Outflow Q (cfs) =	0.1	2.9	4.0	5.5	7.3	36.9	63.5	65.3
Ratio Peak Outflow to Predevelopment Q =	N/A	N/A	N/A	1.1	1.0	3.1	4.3	3.5
Structure Controlling Flow =	Plate	Vertical Orifice 1	Vertical Orifice 1	Vertical Orifice 1	Vertical Orifice 1	Overflow Weir 1	Outlet Plate 1	Outlet Plate 1
Max Velocity through Grate 1 (fps) =	N/A	N/A	N/A	N/A	N/A	0.9	1.6	1.7
Max Velocity through Grate 2 (fps) =	N/A	N/A	N/A	N/A	N/A	N/A	N/A	N/A
Time to Drain 97% of Inflow Volume (hours) =	45	56	51	46	41	33	27	20
Time to Drain 99% of Inflow Volume (hours) =	**47**	61	62	61	60	56	52	49
Maximum Ponding Depth (ft) =	2.25	3.34	3.95	5.07	6.96	7.96	8.33	8.73
Area at Maximum Ponding Depth (acres) =	0.40	0.61	0.65	0.71	0.83	0.90	0.93	0.95
Maximum Volume Stored (acre-ft) =	0.296	0.886	1.266	2.029	3.493	4.348	4.686	5.061

DETENTION BASIN STAGE-STORAGE TABLE BUILDER

MHFD-Detention, Version 4.02 (February 2020)

Project: **The Hills at Lorson Ranch**

Basin ID: **Pond C2.3-asbuilt**

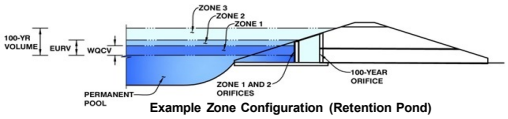

Example Zone Configuration (Retention Pond)

Watershed Information

Selected BMP Type =	**EDB**	
Watershed Area =	16.00	acres
Watershed Length =	1,700	ft
Watershed Length to Centroid =	800	ft
Watershed Slope =	0.030	ft/ft
Watershed Imperviousness =	55.00%	percent
Percentage Hydrologic Soil Group A =	0.0%	percent
Percentage Hydrologic Soil Group B =	40.0%	percent
Percentage Hydrologic Soil Groups C/D =	60.0%	percent
Target WQCV Drain Time =	40.0	hours
Location for 1-hr Rainfall Depths =	User Input	

After providing required inputs above including 1-hour rainfall depths, click 'Run CUHP' to generate runoff hydrographs using the embedded Colorado Urban Hydrograph Procedure.

			Optional User Overrides	
Water Quality Capture Volume (WQCV) =	0.294	acre-feet		acre-feet
Excess Urban Runoff Volume (EURV) =	0.883	acre-feet		acre-feet
2-yr Runoff Volume (P1 = 1.19 in.) =	0.924	acre-feet	1.19	inches
5-yr Runoff Volume (P1 = 1.5 in.) =	1.299	acre-feet	1.50	inches
10-yr Runoff Volume (P1 = 1.75 in.) =	1.627	acre-feet	1.75	inches
25-yr Runoff Volume (P1 = 2 in.) =	2.016	acre-feet	2.00	inches
50-yr Runoff Volume (P1 = 2.25 in.) =	2.357	acre-feet	2.25	inches
100-yr Runoff Volume (P1 = 2.52 in.) =	2.775	acre-feet	2.52	inches
500-yr Runoff Volume (P1 = 3.14 in.) =	3.648	acre-feet		inches
Approximate 2-yr Detention Volume =	0.736	acre-feet		
Approximate 5-yr Detention Volume =	1.046	acre-feet		
Approximate 10-yr Detention Volume =	1.257	acre-feet		
Approximate 25-yr Detention Volume =	1.358	acre-feet		
Approximate 50-yr Detention Volume =	1.409	acre-feet		
Approximate 100-yr Detention Volume =	1.570	acre-feet		

Define Zones and Basin Geometry

Zone 1 Volume (WQCV) =	0.294	acre-feet
Zone 2 Volume (EURV - Zone 1) =	0.589	acre-feet
Zone 3 (100yr + 1 / 2 WQCV - Zones 1 & 2) =	0.834	acre-feet
Total Detention Basin Volume =	1.717	acre-feet
Initial Surcharge Volume (ISV) =	user	ft^3
Initial Surcharge Depth (ISD) =	user	ft
Total Available Detention Depth (H_{total}) =	user	ft
Depth of Trickle Channel (H_{TC}) =	user	ft
Slope of Trickle Channel (S_{TC}) =	user	ft/ft
Slopes of Main Basin Sides (S_{main}) =	user	H:V
Basin Length-to-Width Ratio ($R_{L/W}$) =	user	
Initial Surcharge Area (A_{ISV}) =	user	ft^2
Surcharge Volume Length (L_{ISV}) =	user	ft
Surcharge Volume Width (W_{ISV}) =	user	ft
Depth of Basin Floor (H_{FLOOR}) =	user	ft
Length of Basin Floor (L_{FLOOR}) =	user	ft
Width of Basin Floor (W_{FLOOR}) =	user	ft
Area of Basin Floor (A_{FLOOR}) =	user	ft^2
Volume of Basin Floor (V_{FLOOR}) =	user	ft^3
Depth of Main Basin (H_{MAIN}) =	user	ft
Length of Main Basin (L_{MAIN}) =	user	ft
Width of Main Basin (W_{MAIN}) =	user	ft
Area of Main Basin (A_{MAIN}) =	user	ft^2
Volume of Main Basin (V_{MAIN}) =	user	ft^3
Calculated Total Basin Volume (V_{total}) =	**user**	acre-feet

micropool = 0 = 5744.30

Depth Increment = 0.20 ft

Stage - Storage Description	Stage (ft)	Optional Override Stage (ft)	Length (ft)	Width (ft)	Area (ft^2)	Optional Override Area (ft^2)	Area (acre)	Volume (ft^3)	Volume (ac-ft)
Top of Micropool	--	0.00	--	--	--	40	0.001		
5744.5	--	0.20	--	--	--	50	0.001	9	0.000
5745	--	0.70	--	--	--	1,205	0.028	323	0.007
5746	--	1.70	--	--	--	9,209	0.211	5,530	0.127
5747	--	2.70	--	--	--	24,333	0.559	22,301	0.512
5748	--	3.70	--	--	--	27,855	0.639	48,395	1.111
5749	--	4.70	--	--	--	30,128	0.692	77,386	1.777
5750	--	5.70	--	--	--	32,704	0.751	108,802	2.498
5751	--	6.70	--	--	--	35,377	0.812	142,843	3.279
5752	--	7.70	--	--	--	38,378	0.881	179,720	4.126
5753	--	8.70	--	--	--	41,475	0.952	219,647	5.042
5754	--	9.70	--	--	--	45,209	1.038	262,989	6.037

Pond C2.3 Developed Inflow Hydrograph---- asbuilt Pond C2.1 outflow + C3 Basin + C4 Basin

		2 Year	CUHP	2yr Combined	5 Year	CUHP	5yr Combined	10 Year	CUHP	10yr Combined	25 Year	CUHP	25yr Combined	50 Year	CUHP	50yr Combined	100 Year	CUHP	100yr Combined
Time [hr]	Time [min]	Ponc C2.1 Outflow2 - [cfs]	2 Year [cfs]	Hydrograph	Ponc C2.1 Outflow2 - [cfs]	5 Year [cfs]	Hydrograph	Ponc C2.1 Outflow2 - [cfs]	10 Year [cfs]	Hydrograph	Ponc C2.1 Outflow2 - [cfs]	25 Year [cfs]	Hydrograph	Ponc C2.1 Outflow2 - [cfs]	50 Year [cfs]	Hydrograph	Ponc C2.1 Outflow2 - [cfs]	100 Year [cfs]	Hydrograph
0.00	0.00	0.00	0.00	0.00	0.00	0.00	0.00	0.00	0.00	0.00	0.00	0.00	0.00	0.00	0.00	0.00	0.00	0.00	0.00
0.08	5.00	0.00	0.00	0.00	0.00	0.00	0.00	0.00	0.00	0.00	0.00	0.00	0.00	0.09	0.00	0.09	0.04	0.00	0.04
0.17	10.00	0.14	0.00	0.14	0.18	0.00	0.18	0.20	0.00	0.20	0.17	0.00	0.17	0.19	0.13	0.33	0.18	0.01	0.20
0.25	15.00	0.25	1.17	1.42	0.27	1.91	2.18	0.28	2.37	2.65	0.26	1.59	1.85	0.27	1.99	2.26	0.27	1.94	2.21
0.33	20.00	0.32	4.21	4.54	0.40	5.61	6.01	0.45	6.91	7.36	0.33	4.12	4.45	0.37	4.81	5.18	0.39	5.14	5.53
0.42	25.00	0.48	9.83	10.31	0.54	14.69	15.23	0.58	18.61	19.20	0.52	9.65	10.17	0.55	11.51	12.05	0.57	12.82	13.39
0.50	30.00	0.56	13.28	13.84	1.55	18.82	20.37	2.81	22.84	25.65	2.25	24.57	26.82	3.01	28.96	31.97	3.48	32.54	36.01
0.58	35.00	1.21	12.88	14.09	3.15	17.81	20.96	3.93	21.42	25.35	4.04	29.19	33.23	4.63	34.09	38.72	5.11	40.16	45.28
0.67	40.00	2.54	11.77	14.31	3.89	15.99	19.88	4.62	19.25	23.87	5.06	28.83	33.89	5.64	33.53	39.17	22.82	39.47	62.29
0.75	45.00	3.14	10.24	13.38	4.40	14.14	18.54	5.12	17.24	22.36	6.33	26.34	32.68	34.39	30.62	65.01	60.13	36.96	97.09
0.83	50.00	3.54	8.93	12.48	4.77	12.65	17.42	5.49	15.26	20.75	30.40	24.16	54.56	59.62	28.08	87.70	62.31	33.83	96.13
0.92	55.00	3.84	7.84	11.67	5.05	11.06	16.11	6.49	13.49	19.98	51.27	21.27	72.54	60.76	24.75	85.51	63.89	30.40	94.29
1.00	60.00	4.07	6.88	10.94	5.28	9.62	14.89	14.68	11.94	26.62	59.24	18.58	77.83	61.49	21.64	83.13	65.04	27.30	92.34
1.08	65.00	4.25	6.17	10.42	5.47	8.60	14.06	22.85	10.89	33.74	59.45	16.29	75.74	61.90	19.00	80.90	65.83	24.59	90.42
1.17	70.00	4.40	5.44	9.84	5.62	7.90	13.52	28.48	10.19	38.67	59.42	14.12	73.54	62.05	16.54	78.58	66.25	20.97	87.22
1.25	75.00	4.51	4.83	9.34	5.94	7.15	13.09	31.24	9.58	40.82	59.16	12.44	71.60	61.95	14.62	76.57	66.34	18.02	84.36
1.33	80.00	4.60	4.29	8.89	8.20	6.33	14.52	31.33	8.56	39.89	52.97	10.74	63.71	61.61	12.61	74.22	66.14	15.09	81.23
1.42	85.00	4.67	3.78	8.45	10.29	5.55	15.84	29.58	7.32	36.90	45.47	9.19	54.66	61.06	10.77	71.83	65.68	12.49	78.17
1.50	90.00	4.72	3.29	8.00	11.72	4.82	16.54	27.15	6.18	33.33	38.42	7.64	46.06	60.30	8.94	69.24	64.99	10.21	75.20
1.58	95.00	4.76	2.84	7.60	12.54	4.18	16.72	24.80	5.20	29.99	32.37	6.21	38.59	59.40	7.26	66.66	64.16	8.15	72.31
1.67	100.00	4.80	2.49	7.30	12.84	3.49	16.33	22.74	4.46	27.21	27.58	4.97	32.56	48.95	5.81	54.75	63.22	6.37	69.59
1.75	105.00	4.84	2.31	7.15	12.79	3.04	15.84	21.02	4.04	25.06	23.88	4.05	27.94	37.96	4.74	42.70	62.21	5.07	67.28
1.83	110.00	4.88	2.22	7.10	12.55	2.77	15.32	19.56	3.77	23.33	21.04	3.51	24.55	30.77	4.11	34.89	61.14	4.28	65.43
1.92	115.00	4.90	1.98	6.88	12.19	2.57	14.76	18.22	3.51	21.72	18.86	3.16	22.02	25.88	3.71	29.59	60.03	3.77	63.79
2.00	120.00	4.92	1.77	6.68	11.59	2.37	13.96	16.71	3.18	19.88	16.91	2.93	19.84	22.12	3.43	25.55	55.41	3.39	58.80
2.08	125.00	4.92	1.41	6.33	10.69	1.88	12.57	14.92	2.52	17.44	14.89	2.30	17.19	18.78	2.69	21.48	38.98	2.61	41.59
2.17	130.00	4.92	1.09	6.01	9.65	1.45	11.11	13.06	1.95	15.01	12.93	1.76	14.68	15.83	2.06	17.89	28.56	1.94	30.51
2.25	135.00	4.90	0.85	5.75	8.62	1.13	9.75	11.33	1.50	12.82	11.16	1.34	12.50	13.34	1.57	14.91	21.64	1.45	23.09
2.33	140.00	4.89	0.65	5.54	7.69	0.86	8.55	9.81	1.13	10.94	9.64	1.02	10.66	11.28	1.19	12.47	16.85	1.08	17.93
2.42	145.00	4.86	0.50	5.36	6.89	0.66	7.54	8.52	0.85	9.37	8.37	0.77	9.14	9.60	0.90	10.50	13.43	0.82	14.25
2.50	150.00	4.84	0.38	5.22	6.25	0.49	6.74	7.46	0.63	8.10	7.34	0.57	7.91	8.26	0.67	8.93	10.93	0.62	11.55
2.58	155.00	4.81	0.29	5.09	5.81	0.36	6.17	6.63	0.47	7.11	6.54	0.43	6.96	7.21	0.50	7.70	9.08	0.46	9.55
2.67	160.00	4.78	0.21	4.99	5.71	0.26	5.97	6.03	0.35	6.38	5.97	0.32	6.29	6.41	0.37	6.79	7.72	0.35	8.07
2.75	165.00	4.74	0.15	4.90	5.68	0.19	5.87	5.72	0.26	5.98	5.72	0.24	5.96	5.88	0.28	6.15	6.71	0.26	6.97
2.83	170.00	4.71	0.10	4.81	5.65	0.13	5.78	5.69	0.18	5.87	5.69	0.17	5.86	5.71	0.19	5.91	6.03	0.18	6.21
2.92	175.00	4.68	0.06	4.74	5.62	0.08	5.70	5.66	0.11	5.77	5.66	0.11	5.77	5.68	0.12	5.81	5.72	0.12	5.84
3.00	180.00	4.64	0.03	4.67	5.58	0.05	5.63	5.63	0.06	5.69	5.63	0.06	5.69	5.65	0.07	5.72	5.69	0.07	5.76
3.08	185.00	4.61	0.01	4.62	5.55	0.02	5.57	5.60	0.03	5.62	5.59	0.03	5.62	5.62	0.03	5.65	5.66	0.03	5.69
3.17	190.00	4.57	0.00	4.58	5.52	0.01	5.53	5.56	0.01	5.57	5.56	0.01	5.57	5.58	0.01	5.59	5.62	0.01	5.63
3.25	195.00	4.54	0.00	4.54	5.49	0.00	5.49	5.53	0.00	5.53	5.53	0.00	5.53	5.55	0.00	5.55	5.59	0.00	5.59
3.33	200.00	4.50	0.00	4.50	5.45	0.00	5.45	5.50	0.00	5.50	5.50	0.00	5.50	5.52	0.00	5.52	5.56	0.00	5.56
3.42	205.00	4.46	0.00	4.46	5.42	0.00	5.42	5.47	0.00	5.47	5.46	0.00	5.46	5.49	0.00	5.49	5.53	0.00	5.53
3.50	210.00	4.43	0.00	4.43	5.39	0.00	5.39	5.43	0.00	5.43	5.43	0.00	5.43	5.45	0.00	5.45	5.49	0.00	5.49
3.58	215.00	4.39	0.00	4.39	5.35	0.00	5.35	5.40	0.00	5.40	5.40	0.00	5.40	5.42	0.00	5.42	5.46	0.00	5.46
3.67	220.00	4.36	0.00	4.36	5.32	0.00	5.32	5.37	0.00	5.37	5.36	0.00	5.36	5.39	0.00	5.39	5.43	0.00	5.43
3.75	225.00	4.32	0.00	4.32	5.29	0.00	5.29	5.33	0.00	5.33	5.33	0.00	5.33	5.35	0.00	5.35	5.40	0.00	5.40
3.83	230.00	4.29	0.00	4.29	5.25	0.00	5.25	5.30	0.00	5.30	5.30	0.00	5.30	5.32	0.00	5.32	5.36	0.00	5.36
3.92	235.00	4.25	0.00	4.25	5.22	0.00	5.22	5.27	0.00	5.27	5.26	0.00	5.26	5.29	0.00	5.29	5.33	0.00	5.33
4.00	240.00	4.21	0.00	4.21	5.19	0.00	5.19	5.23	0.00	5.23	5.23	0.00	5.23	5.25	0.00	5.25	5.30	0.00	5.30
4.08	245.00	4.18	0.00	4.18	5.15	0.00	5.15	5.20	0.00	5.20	5.20	0.00	5.20	5.22	0.00	5.22	5.26	0.00	5.26
4.17	250.00	4.14	0.00	4.14	5.12	0.00	5.12	5.17	0.00	5.17	5.16	0.00	5.16	5.19	0.00	5.19	5.23	0.00	5.23
4.25	255.00	4.10	0.00	4.10	5.09	0.00	5.09	5.13	0.00	5.13	5.13	0.00	5.13	5.15	0.00	5.15	5.20	0.00	5.20
4.33	260.00	4.07	0.00	4.07	5.05	0.00	5.05	5.10	0.00	5.10	5.10	0.00	5.10	5.12	0.00	5.12	5.16	0.00	5.16
4.42	265.00	4.03	0.00	4.03	5.02	0.00	5.02	5.07	0.00	5.07	5.06	0.00	5.06	5.09	0.00	5.09	5.13	0.00	5.13
4.50	270.00	3.99	0.00	3.99	4.98	0.00	4.98	5.03	0.00	5.03	5.03	0.00	5.03	5.05	0.00	5.05	5.09	0.00	5.09
4.58	275.00	3.96	0.00	3.96	4.95	0.00	4.95	5.00	0.00	5.00	4.99	0.00	4.99	5.02	0.00	5.02	5.06	0.00	5.06
4.67	280.00	3.92	0.00	3.92	4.92	0.00	4.92	4.96	0.00	4.96	4.96	0.00	4.96	4.98	0.00	4.98	5.03	0.00	5.03
4.75	285.00	3.88	0.00	3.88	4.88	0.00	4.88	4.93	0.00	4.93	4.93	0.00	4.93	4.95	0.00	4.95	4.99	0.00	4.99
4.83	290.00	3.84	0.00	3.84	4.85	0.00	4.85	4.89	0.00	4.89	4.89	0.00	4.89	4.92	0.00	4.92	4.96	0.00	4.96
4.92	295.00	3.81	0.00	3.81	4.81	0.00	4.81	4.86	0.00	4.86	4.86	0.00	4.86	4.88	0.00	4.88	4.92	0.00	4.92
5.00	300.00	3.77	0.00	3.77	4.78	0.00	4.78	4.83	0.00	4.83	4.82	0.00	4.82	4.85	0.00	4.85	4.89	0.00	4.89
5.08	305.00	3.73	0.00	3.73	4.74	0.00	4.74	4.79	0.00	4.79	4.79	0.00	4.79	4.81	0.00	4.81	4.86	0.00	4.86
5.17	310.00	3.69	0.00	3.69	4.71	0.00	4.71	4.76	0.00	4.76	4.75	0.00	4.75	4.78	0.00	4.78	4.82	0.00	4.82
5.25	315.00	3.65	0.00	3.65	4.67	0.00	4.67	4.72	0.00	4.72	4.72	0.00	4.72	4.74	0.00	4.74	4.79	0.00	4.79
5.33	320.00	3.62	0.00	3.62	4.64	0.00	4.64	4.69	0.00	4.69	4.68	0.00	4.68	4.71	0.00	4.71	4.75	0.00	4.75
5.42	325.00	3.58	0.00	3.58	4.60	0.00	4.60	4.65	0.00	4.65	4.65	0.00	4.65	4.67	0.00	4.67	4.72	0.00	4.72
5.50	330.00	3.54	0.00	3.54	4.57	0.00	4.57	4.62	0.00	4.62	4.61	0.00	4.61	4.64	0.00	4.64	4.68	0.00	4.68
5.58	335.00	3.50	0.00	3.50	4.53	0.00	4.53	4.58	0.00	4.58	4.58	0.00	4.58	4.60	0.00	4.60	4.65	0.00	4.65
5.67	340.00	3.46	0.00	3.46	4.50	0.00	4.50	4.55	0.00	4.55	4.54	0.00	4.54	4.57	0.00	4.57	4.61	0.00	4.61
5.75	345.00	3.42	0.00	3.42	4.46	0.00	4.46	4.51	0.00	4.51	4.51	0.00	4.51	4.53	0.00	4.53	4.58	0.00	4.58
5.83	350.00	3.38	0.00	3.38	4.43	0.00	4.43	4.48	0.00	4.48	4.47	0.00	4.47	4.50	0.00	4.50	4.54	0.00	4.54
5.92	355.00	3.34	0.00	3.34	4.39	0.00	4.39	4.44	0.00	4.44	4.44	0.00	4.44	4.46	0.00	4.46	4.51	0.00	4.51
6.00	360.00	3.31	0.00	3.31	4.35	0.00	4.35	4.40	0.00	4.40	4.40	0.00	4.40	4.43	0.00	4.43	4.47	0.00	4.47

MAINTENANCE ACCESS ROAD
NO SCALE

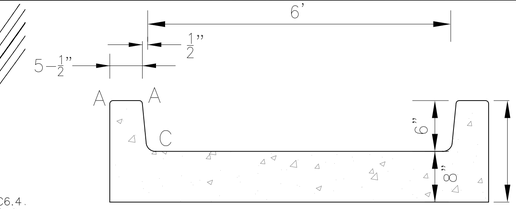

CONCRETE LOW FLOW CHANNEL DETAIL
NO SCALE

LENGTH FOR RADII
A = 1/2"
C = 1-1/2"

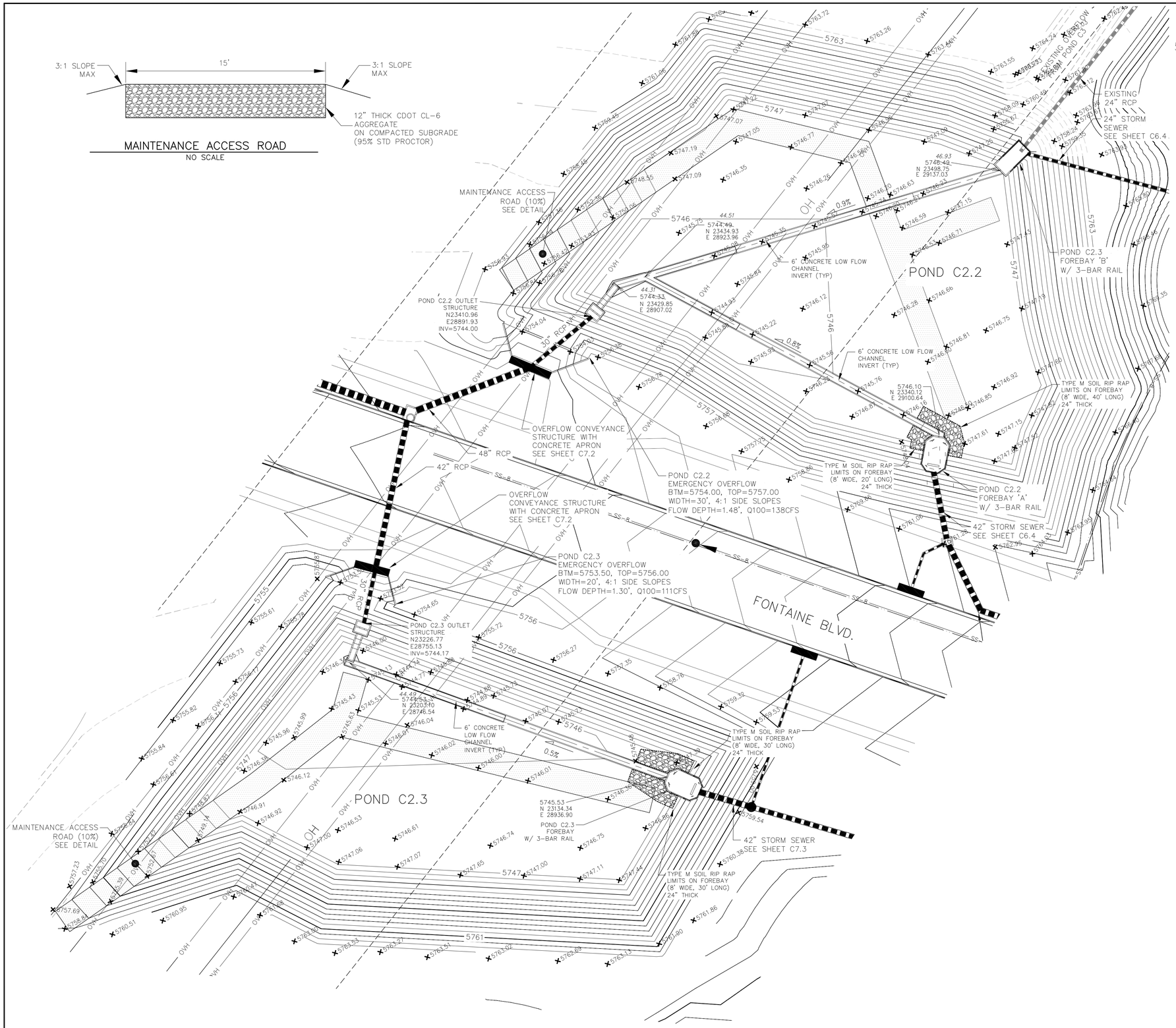

AS-BUILT
DATE: 09/30/2022

SCALE: 1"=30'

CORE ENGINEERING GROUP
15004 1ST AVENUE S.
BURNSVILLE, MN 55306
PH: 719.570.1100
CONTACT: RICHARD L. SCHINDLER, P.E.
EMAIL: Rich@ceg1.com

NO.	DESCRIPTION	DATE

PREPARED FOR:
LORSON, LLC
212 N. WAHSATCH AVE, SUITE 301
COLORADO SPRINGS, COLORADO 80903
(719) 635-3200
CONTACT: JEFF MARK

PROJECT:
THE HILLS COLLECTOR STREET CONSTRUCTION
FONTAINE BLVD. GRAYLING PLY
LORSON BLVD. WILLETTE DR. LAMPREY DR
COLORADO SPRINGS, COLORADO

DRAWN: RLS
DESIGNED: RLS
CHECKED: RLS

POND C2.2 & C2.3 FOREBAY, LOW FLOW CHANNEL AND OUTLET STRUCTURE LAYOUT

COLORADO REGISTERED PROFESSIONAL ENGINEER
RICHARD L. SCHINDLER
33997
11-12-2020

DATE: NOV 12, 2020

PROJECT NO. 100.061

SHEET NUMBER C9.5

TOTAL SHEETS: 58

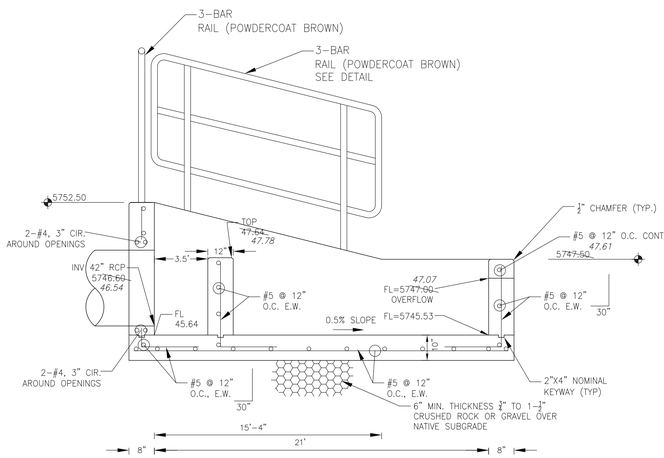

FOREBAY SECTION A–A

NO SCALE

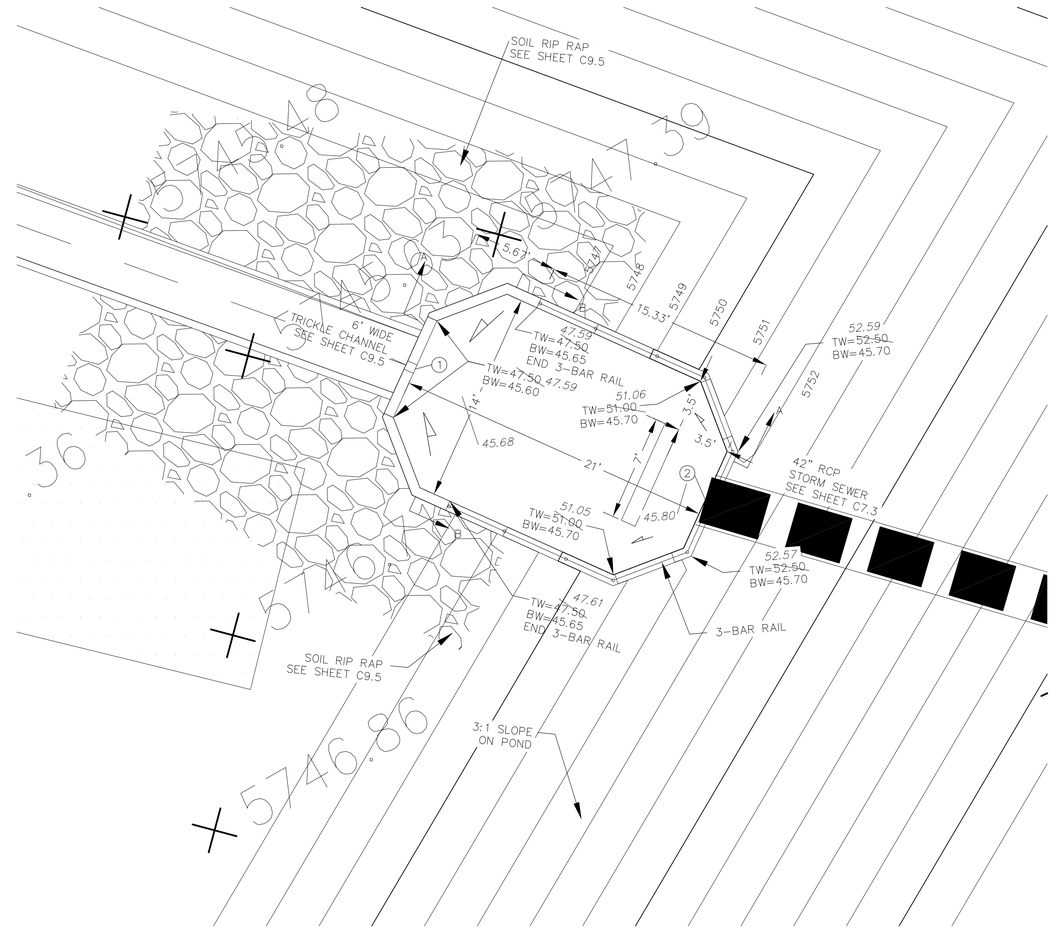

POND C2.3 – FOREBAY LAYOUT

SCALE: 1"=5'

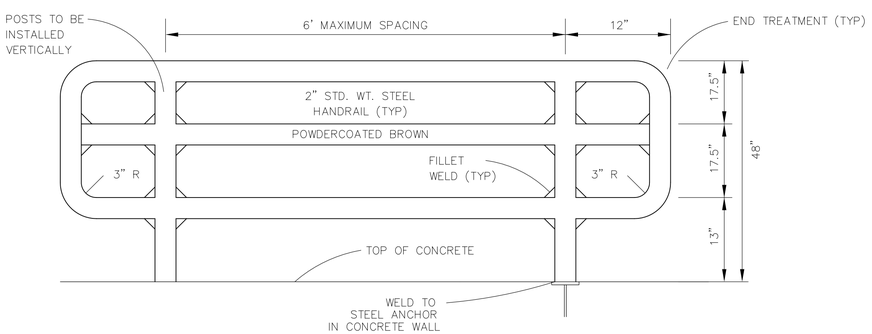

3–BAR RAIL DETAIL

NO SCALE

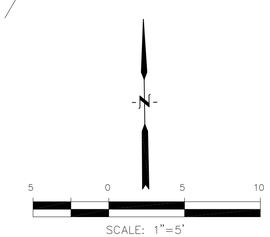

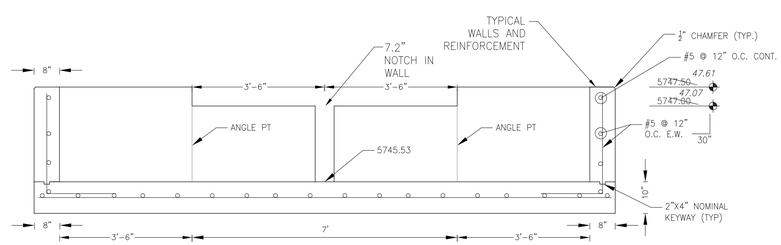

FOREBAY SECTION B–B

NO SCALE

NOTE: ALL CONCRETE FOR FOREBAY SHALL BE CDOT TYPE D

POINT TABLE (FOREBAY)

NUMBER	NORTHING	EASTING	ELEVATION	NOTES
1	23134.06	28937.51	5745.53	FOREBAY BOTTOM
2	23125.44	28956.66	5745.64	FOREBAY BOTTOM, INV 42"=5746.50

AS-BUILT

DATE: 09/30/2022

CORE ENGINEERING GROUP
15004 1ST AVENUE S.
BURNSVILLE, MN 55306
PH: 719.570.1100
CONTACT: RICHARD L. SCHINDLER, P.E.
EMAIL: Rich@ceg1.com

NO.	DESCRIPTION	DATE

PREPARED FOR:
LORSON, LLC
212 N. WAHSATCH AVE, SUITE 301
COLORADO SPRINGS, COLORADO 80903
(719) 635-3200
CONTACT: JEFF MARK

PROJECT:
THE HILLS COLLECTOR STREET CONSTRUCTION
FONTAINE BLVD. GRAYLING DR.
LORSON BLVD. WHITE PINE LANE DR.
COLORADO SPRINGS, COLORADO

DRAWN: RLS
DESIGNED: RLS
CHECKED: RLS

POND C2.3

FOREBAY DETAILS

COLORADO REGISTERED PROFESSIONAL ENGINEER
RICHARD L. SCHINDLER
33997
11-12-2020

DATE: NOV 12, 2020

PROJECT NO. 100.061

SHEET NUMBER C9.7

TOTAL SHEETS: 58

NOTES
1. ALL SPOT ELEVATIONS ARE FLOW LINE UNLESS OTHERWISE NOTED.
2. SEE EARLY GRADING PLAN FOR GRADING INFORMATION.
3. ALL STORM SEWER SHALL BE CLASS III RCP.
4. ALL MHs SHALL BE TYPE 1 UNLESS OTHERWISE NOTED.

1 CURVE DATA ID

2 PEDESTRIAN RAMP, SEE SHEET C10.1

3 CURB/GUTTER FLOW LINE POINTS

50 25 0 50 100
SCALE: 1"=50'

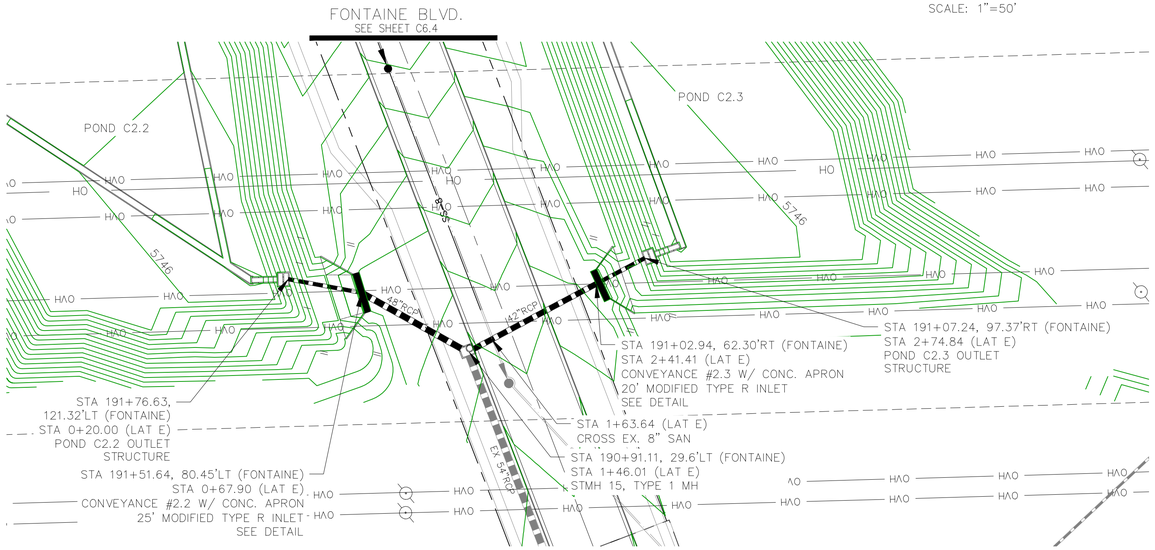

STORM LATERAL 'E'

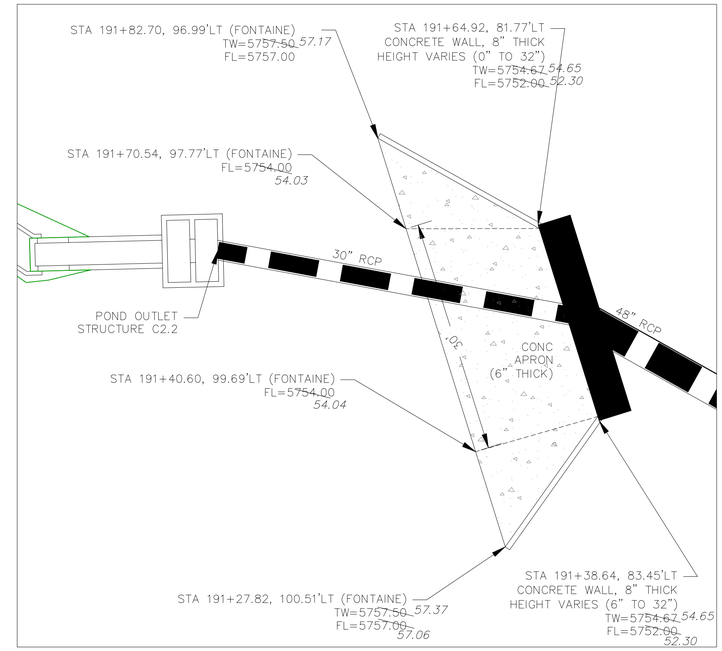

CONVEYANCE STRUCTURE #2.2

SCALE: 1"=10'

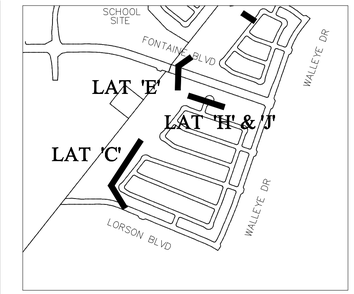

KEY MAP

CONVEYANCE STRUCTURE #2.2 NOTES:

1. 25' CDOT TYPE R INLET WITH MODIFIED THROAT OPENING
2. THROAT OPENING = 24"
3. EXTEND 1.25" GALVANIZED STEEL ROD SUPPORTS (TYPE R INLET) TO ACCOMODATE 24" THROAT OPENING
4. CONCRETE APRON TO BE REINFORCED WITH NO. 4 REBAR, 24" O.C. BOTH WAYS. REBAR TO EXTEND INTO CONCRETE WALL W/ NO. 4 "L" BARS, 18" O.C.
5. CONCRETE WALLS SHALL HAVE A MINIMUM OF TWO HORIZONTAL NO. 4 BARS

6. 24" THROAT OPENING TO INCLUDE SAFETY GRATE.

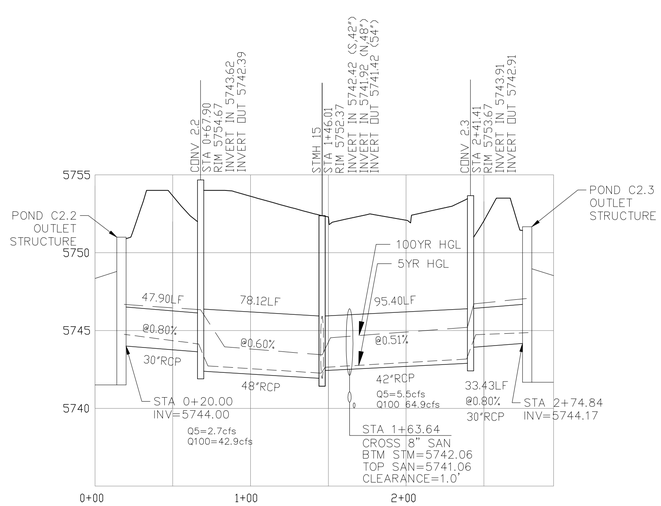

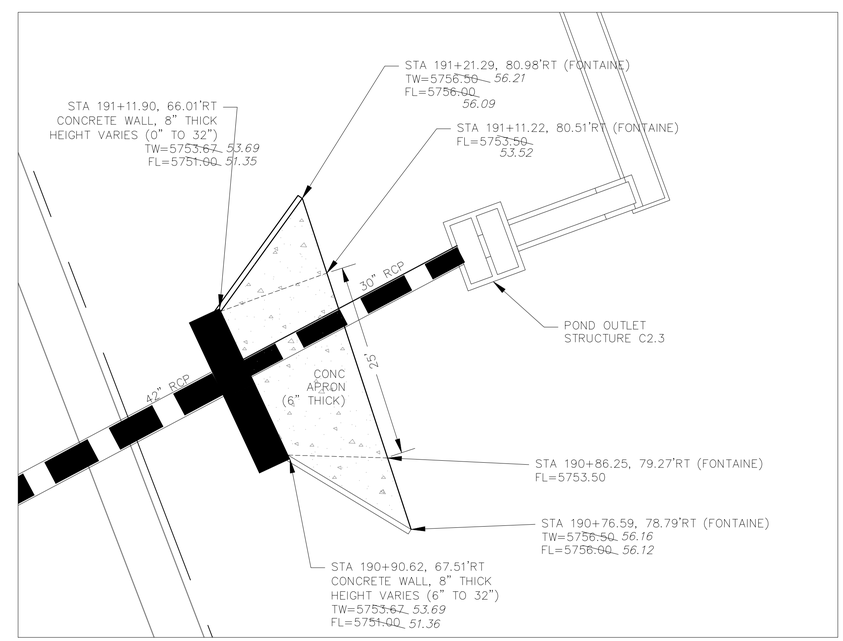

CONVEYANCE STRUCTURE #2.3

SCALE: 1"=10'

CONVEYANCE STRUCTURE #2.3 NOTES:

1. 20' CDOT TYPE R INLET WITH MODIFIED THROAT OPENING
2. THROAT OPENING = 24"
3. EXTEND 1.25" GALVANIZED STEEL ROD SUPPORTS (TYPE R INLET) TO ACCOMODATE 24" THROAT OPENING
4. CONCRETE APRON TO BE REINFORCED WITH NO. 4 REBAR, 24" O.C. BOTH WAYS. REBAR TO EXTEND INTO CONCRETE WALL W/ NO. 4 "L" BARS.
5. CONCRETE WALLS SHALL HAVE A MINIMUM OF TWO HORIZONTAL NO. 4 BARS

6. 24" THROAT OPENING TO INCLUDE SAFETY GRATE.

AS-BUILT
DATE: 09/30/2022

CORE ENGINEERING GROUP
15004 1ST AVENUE S.
BURNSVILLE, MN 55306
PH: 719.370.1100
CONTACT: RICHARD L. SCHINDLER, P.E.
EMAIL: Rich@ceg3.com

NO.	DESCRIPTION	DATE
1.	RAISE SITE 1' EAST OF POWERLINES	JAN 12, 2021

PREPARED FOR:
LORSON, LLC
212 N. WAHSATCH AVE, SUITE 301
COLORADO SPRINGS, COLORADO 80903
(719) 635-3200
CONTACT: JEFF MARK

PROJECT:
THE HILLS COLLECTOR STREET CONSTRUCTION
FONTAINE BLVD. - GRAYLING DR.
LORSON BLVD.-WALLEYE DR-LAMPREY DR
COLORADO SPRINGS, COLORADO

DRAWN: RLS
DESIGNED: RLS
CHECKED: RLS

STREET & STORM SEWER PLAN/PROFILE
STORM LATERAL 'E'
CONVEYANCE #2.2 & #2.3

COLORADO REGISTERED PROFESSIONAL ENGINEER
RICHARD L. SCHINDLER
33997
11-12-2020

DATE: NOV 12, 2020

PROJECT NO. 100.061

SHEET NUMBER C7.2
TOTAL SHEETS: 58

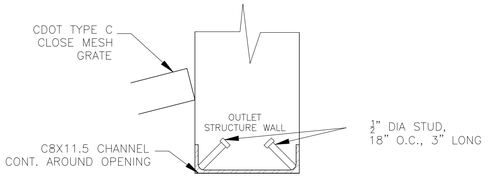

DETAIL A
NO SCALE

NOTE:
AFTER CONCRETE STRUCTURE HAS BEEN POURED ALL GRATE DIMENSIONS SHALL BE FIELD VERIFIED PRIOR TO GRATE CONSTRUCTION

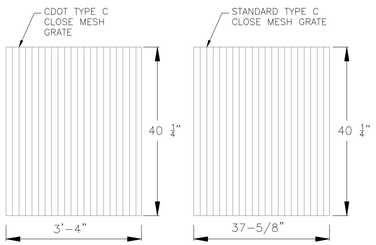

GRATE 1
NO SCALE

GRATES 2,3,4,5
NO SCALE

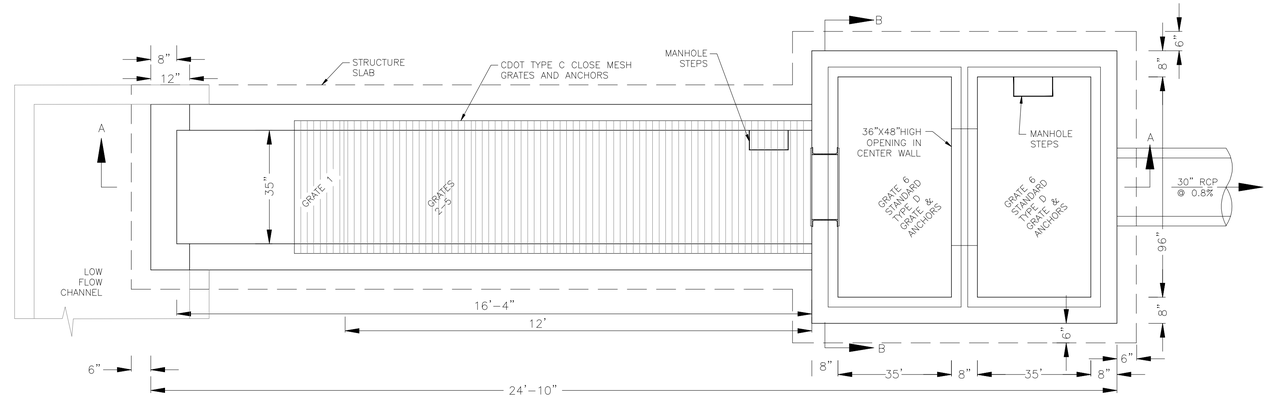

OUTLET STRUCTURE DETAIL – PLAN VIEW
NO SCALE

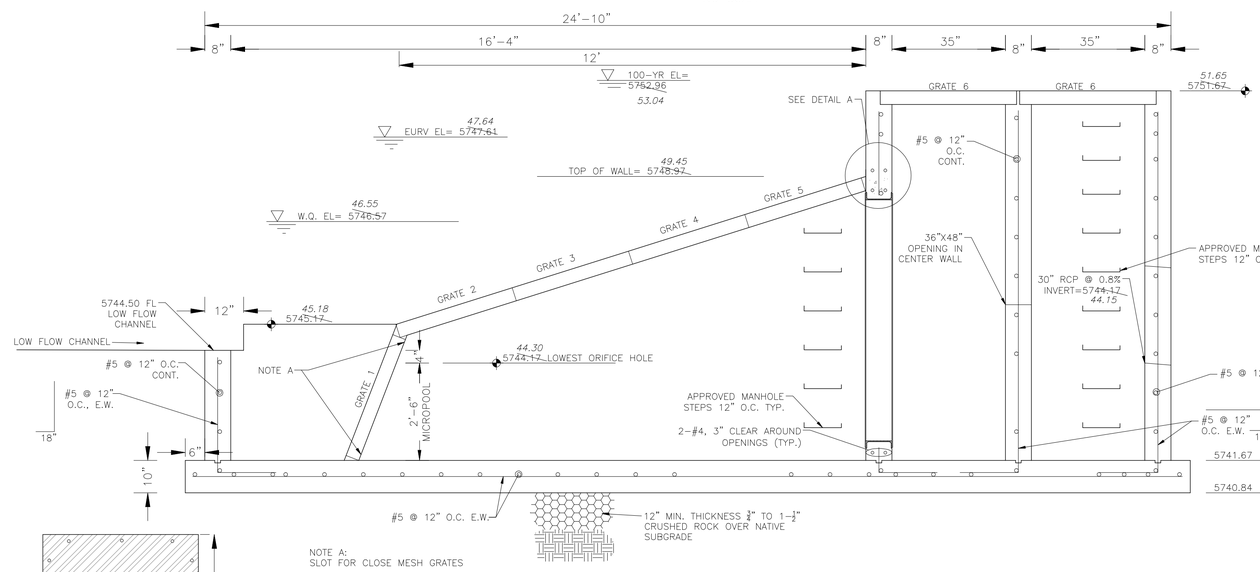

OUTLET STRUCTURE DETAIL – SECTION A–A
NO SCALE

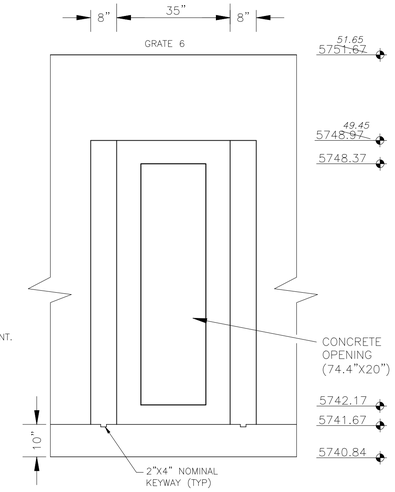

OUTLET STRUCTURE DETAIL – SECTION B–B
NO SCALE

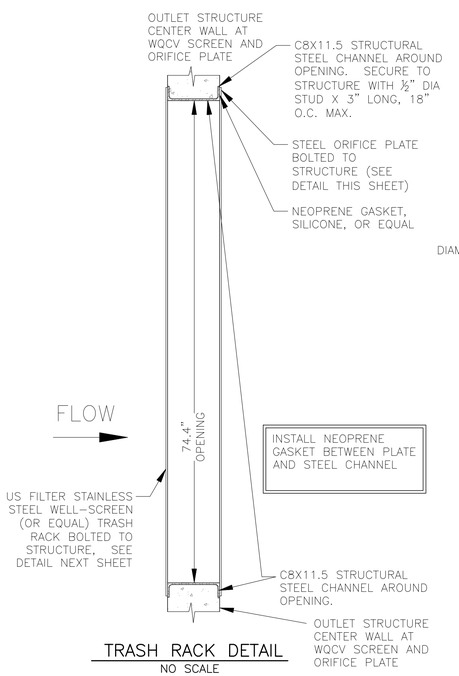

TRASH RACK DETAIL
NO SCALE

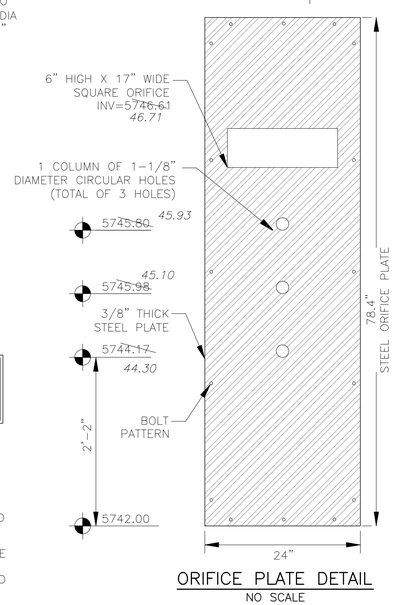

ORIFICE PLATE DETAIL
NO SCALE

OUTLET STRUCTURE, FOREBAY, AND DRAIN CHANNEL NOTES:

1. PRIOR TO CONSTRUCTION, CONTRACTOR SHALL PROVIDE SHOP DRAWINGS FOR ALL COMPONENTS OF THE OUTLET STRUCTURE.
2. GRADE 60 REINFORCING STEEL REQUIRED. SEE TABLE FOR THE MINIMUM LAP SPLICE LENGTH FOR REINFORCING BARS. ALL REINFORCING STEEL SHALL HAVE A TWO-INCH MINIMUM CLEARANCE FROM EDGE OF CONCRETE, UNLESS OTHERWISE NOTED.

BAR SIZE	#4	#5	#6
MIN. SPLICE LENGTH	1'-3"	1'-7"	2'-0"

3. CONCRETE FOR THE OUTLET STRUCTURE AND FOREBAY SHALL BE CDOT CLASS D CONCRETE.
4. CONCRETE FOR DRAIN CHANNELS SHALL BE CDOT CLASS B CONCRETE
5. EXPANSION JOINT MATERIAL SHALL MEET AASHTO SPECIFICATION M-213. EXPANSION JOINT MATERIAL SHALL BE ½" THICK, SHALL EXTEND THE FULL DEPTH OF CONTACT SURFACE AND THE JOINT SHALL BE SEALED, REFER TO DETAILS.
6. ALL EXPOSED CONCRETE CORNERS SHALL HAVE A ¾" CHAMFER UNLESS OTHERWISE NOTED.
7. SUBGRADE TO BE 12" THICK CLEAN FILL COMPACTED TO 95% STANDARD PROCTOR DENSITY PER ASTM M698 UNDER STRUCTURE.
8. REFER TO POND DETAILS FOR PRESEDIMENTATION/FOREBAY DESIGN.
9. ENGINEER SHALL BE NOTIFIED PRIOR TO BEGINNING CONSTRUCITON OF OUTLET STRUCTURE TO SCHEDULE OBSERVATION VISITS FOR STRUCTURES.

WQCV WELL-SCREEN NOTES:

1. Well-Screen shall be stainless steel and attached by stainless steel bolts along edge of the mounting frame.

2. WQCV Well Screen
- Type of Screen: Stainless steel #93 Vee Wire (Johnson Vee Wire (tm) Stainless Steel Screen or equivalent with 60% open area)
- Screen slot opening dimension: 0.139" (Screen #93 Vee Wire Slot Opening)
- Type and Size of Support Rod: TE 0.074"X0.50"
- Spacing of Support Rod (O.C.): 1.0 Inch
- Total Screen Thickness: 0.655"
- Carbon Steel Holding Frame Type: 3/4" x 1.0" angle

AS-BUILT
DATE: 09/30/2022

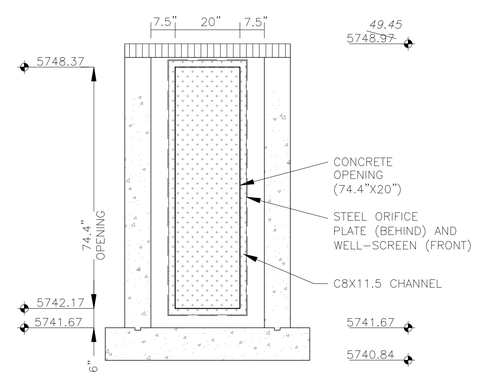

OUTLET STRUCTURE DETAIL – SECTION B–B
NO SCALE

CORE ENGINEERING GROUP
15004 1ST AVENUE S.
BURNSVILLE, MN 55306
PH: 719.370.1100
CONTACT: RICHARD L. SCHINDLER, P.E.
EMAIL: Rich@ceg1.com

NO.	DESCRIPTION	DATE

PREPARED FOR:
LORSON, LLC
212 N. WAHSATCH AVE, SUITE 301
COLORADO SPRINGS, COLORADO 80903
(719) 635-3200
CONTACT: JEFF MARK

PROJECT:
THE HILLS COLLECTOR STREET CONSTRUCTION
FONTAINE BLVD. GRAVEL DR.
LORSON BLVD-WALLEYE DR-LAMPREY DR
COLORADO SPRINGS, COLORADO

DRAWN: RLS
DESIGNED: RLS
CHECKED: RLS

POND C2.3 FULL SPECTRUM OUTLET STRUCTURE DETAILS

COLORADO REGISTERED PROFESSIONAL ENGINEER
RICHARD L. SCHINDLER
33997
11-12-2020

DATE: NOV 12, 2020
PROJECT NO. 100.061
SHEET NUMBER C9.14
TOTAL SHEETS: 58

DETENTION BASIN OUTLET STRUCTURE DESIGN

MHFD-Detention, Version 4.02 (February 2020)

Project: **The Hills at Lorson Ranch**

Basin ID: **Pond C3-asbuilt**

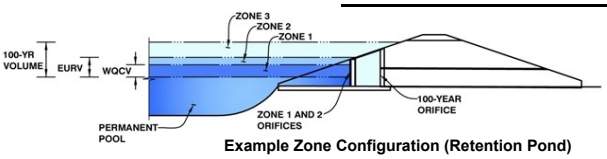

Example Zone Configuration (Retention Pond)

	Estimated Stage (ft)	Estimated Volume (ac-ft)	Outlet Type
Zone 1 (WQCV)	3.27	0.459	Orifice Plate
Zone 2 (EURV)	4.37	0.858	Rectangular Orifice
Z3 (100+1/2WQCV)	5.66	1.346	Weir&Pipe (Restrict)
Total (all zones)		2.663	

User Input: Orifice at Underdrain Outlet (typically used to drain WQCV in a Filtration BMP)

Underdrain Orifice Invert Depth =	N/A	ft (distance below the filtration media surface)	Underdrain Orifice Area =	N/A	ft^2
Underdrain Orifice Diameter =	N/A	inches	Underdrain Orifice Centroid =	N/A	feet

Calculated Parameters for Underdrain

User Input: Orifice Plate with one or more orifices or Elliptical Slot Weir (typically used to drain WQCV and/or EURV in a sedimentation BMP)

Invert of Lowest Orifice =	0.00	ft (relative to basin bottom at Stage = 0 ft)	WQ Orifice Area per Row =	8.333E-03	ft^2
Depth at top of Zone using Orifice Plate =	3.27	ft (relative to basin bottom at Stage = 0 ft)	Elliptical Half-Width =	N/A	feet
Orifice Plate: Orifice Vertical Spacing =	N/A	inches	Elliptical Slot Centroid =	N/A	feet
Orifice Plate: Orifice Area per Row =	1.20	sq. inches (diameter = 1-1/4 inches)	Elliptical Slot Area =	N/A	ft^2

Calculated Parameters for Plate

User Input: Stage and Total Area of Each Orifice Row (numbered from lowest to highest)

	Row 1 (required)	Row 2 (optional)	Row 3 (optional)	Row 4 (optional)	Row 5 (optional)	Row 6 (optional)	Row 7 (optional)	Row 8 (optional)
Stage of Orifice Centroid (ft)	0.00	1.02	2.02					
Orifice Area (sq. inches)	1.20	1.20	1.20					

	Row 9 (optional)	Row 10 (optional)	Row 11 (optional)	Row 12 (optional)	Row 13 (optional)	Row 14 (optional)	Row 15 (optional)	Row 16 (optional)
Stage of Orifice Centroid (ft)								
Orifice Area (sq. inches)								

User Input: Vertical Orifice (Circular or Rectangular)

	Zone 2 Rectangular	Not Selected			Zone 2 Rectangular	Not Selected
Invert of Vertical Orifice =	3.32	N/A	ft (relative to basin bottom at Stage = 0 ft)	Vertical Orifice Area =	0.58	N/A
Depth at top of Zone using Vertical Orifice =	4.37	N/A	ft (relative to basin bottom at Stage = 0 ft)	Vertical Orifice Centroid =	0.25	N/A
Vertical Orifice Height =	6.00	N/A	inches			
Vertical Orifice Width =	14.00		inches			

Calculated Parameters for Vertical Orifi

User Input: Overflow Weir (Dropbox with Flat or Sloped Grate and Outlet Pipe OR Rectangular/Trapezoidal Weir (and No Outlet Pipe)

	Zone 3 Weir	Not Selected			Zone 3 Weir	Not Selected
Overflow Weir Front Edge Height, Ho =	6.73	N/A	ft (relative to basin bottom at Stage = 0 ft)	Height of Grate Upper Edge, H_t =	6.73	N/A
Overflow Weir Front Edge Length =	6.00	N/A	feet	Overflow Weir Slope Length =	6.00	N/A
Overflow Weir Grate Slope =	0.00	N/A	H:V	Grate Open Area / 100-yr Orifice Area =	10.87	N/A
Horiz. Length of Weir Sides =	6.00	N/A	feet	Overflow Grate Open Area w/o Debris =	25.20	N/A
Overflow Grate Open Area % =	70%	N/A	%, grate open area/total area	Overflow Grate Open Area w/ Debris =	12.60	N/A
Debris Clogging % =	50%	N/A	%			

Calculated Parameters for Overflow We

User Input: Outlet Pipe w/ Flow Restriction Plate (Circular Orifice, Restrictor Plate, or Rectangular Orifice)

	Zone 3 Restrictor	Not Selected			Zone 3 Restrictor	Not Selected
Depth to Invert of Outlet Pipe =	0.17	N/A	ft (distance below basin bottom at Stage = 0 ft)	Outlet Orifice Area =	2.32	N/A
Outlet Pipe Diameter =	24.00	N/A	inches	Outlet Orifice Centroid =	0.77	N/A
Restrictor Plate Height Above Pipe Invert =	16.60		inches	Half-Central Angle of Restrictor Plate on Pipe =	1.96	N/A

Calculated Parameters for Outlet Pipe w/ Flow Restriction Pla

User Input: Emergency Spillway (Rectangular or Trapezoidal)

Spillway Invert Stage=	9.59	ft (relative to basin bottom at Stage = 0 ft)	Spillway Design Flow Depth=	1.32	feet
Spillway Crest Length =	20.00	feet	Stage at Top of Freeboard =	12.59	feet
Spillway End Slopes =	4.00	H:V	Basin Area at Top of Freeboard =	1.66	acres
Freeboard above Max Water Surface =	1.68	feet	Basin Volume at Top of Freeboard =	9.74	acre-ft

Calculated Parameters for Spillway

micropool = 0 = 5755.15

Routed Hydrograph Results

The user can override the default CUHP hydrographs and runoff volumes by entering new values in the Inflow Hydrographs table (Columns W through AF).

Design Storm Return Period =	WQCV	EURV	2 Year	5 Year	10 Year	25 Year	50 Year	100 Year
One-Hour Rainfall Depth (in) =	N/A	N/A	1.19	1.50	1.75	2.00	2.25	2.52
CUHP Runoff Volume (acre-ft) =	0.459	1.316	1.426	2.032	2.557	3.174	3.723	4.395
User Override Inflow Hydrograph Volume (acre-ft) =	N/A	N/A	3.549	5.555	7.674	10.126	12.221	14.786
CUHP Predevelopment Peak Q (cfs) =	N/A	N/A	5.6	12.2	17.2	27.0	33.3	41.0
OPTIONAL Override Predevelopment Peak Q (cfs) =	N/A	N/A						
Predevelopment Unit Peak Flow, q (cfs/acre) =	N/A	N/A	0.22	0.47	0.66	1.04	1.28	1.58
Peak Inflow Q (cfs) =	N/A	N/A	28.0	41.4	54.0	82.0	98.8	115.3
Peak Outflow Q (cfs) =	0.2	2.7	3.7	5.0	22.5	30.2	31.4	32.8
Ratio Peak Outflow to Predevelopment Q =	N/A	N/A	N/A	0.4	1.3	1.1	0.9	0.8
Structure Controlling Flow =	Plate	Vertical Orifice 1	Vertical Orifice 1	Vertical Orifice 1	Overflow Weir 1	Outlet Plate 1	Outlet Plate 1	Outlet Plate 1
Max Velocity through Grate 1 (fps) =	N/A	N/A	N/A	N/A	0.7	1.0	1.0	1.0
Max Velocity through Grate 2 (fps) =	N/A	N/A	N/A	N/A	N/A	N/A	N/A	N/A
Time to Drain 97% of Inflow Volume (hours) =	38	48	50	48	44	39	34	29
Time to Drain 99% of Inflow Volume (hours) =	**40**	52	57	59	57	55	53	51
Maximum Ponding Depth (ft) =	3.27	4.37	5.09	6.39	7.20	7.91	8.50	9.24
Area at Maximum Ponding Depth (acres) =	0.57	0.93	1.06	1.18	1.26	1.32	1.39	1.48
Maximum Volume Stored (acre-ft) =	0.462	1.320	2.044	3.493	4.493	5.407	6.193	7.253

DETENTION BASIN STAGE-STORAGE TABLE BUILDER

MHFD-Detention, Version 4.02 (February 2020)

Project: **The Hills at Lorson Ranch**

Basin ID: **Pond C3-asbuilt**

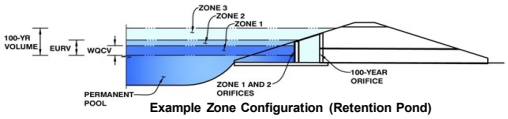

Example Zone Configuration (Retention Pond)

micropool = 0 = 5755.15

Watershed Information

Selected BMP Type =	**EDB**	
Watershed Area =	26.00	acres
Watershed Length =	1,800	ft
Watershed Length to Centroid =	600	ft
Watershed Slope =	0.040	ft/ft
Watershed Imperviousness =	52.00%	percent
Percentage Hydrologic Soil Group A =	0.0%	percent
Percentage Hydrologic Soil Group B =	20.0%	percent
Percentage Hydrologic Soil Groups C/D =	80.0%	percent
Target WQCV Drain Time =	40.0	hours
Location for 1-hr Rainfall Depths =	User Input	

After providing required inputs above including 1-hour rainfall depths, click 'Run CUHP' to generate runoff hydrographs using the embedded Colorado Urban Hydrograph Procedure.

			Optional User Overrides	
Water Quality Capture Volume (WQCV) =	0.459	acre-feet		acre-feet
Excess Urban Runoff Volume (EURV) =	1.316	acre-feet		acre-feet
2-yr Runoff Volume (P1 = 1.19 in.) =	1.426	acre-feet	1.19	inches
5-yr Runoff Volume (P1 = 1.5 in.) =	2.032	acre-feet	1.50	inches
10-yr Runoff Volume (P1 = 1.75 in.) =	2.557	acre-feet	1.75	inches
25-yr Runoff Volume (P1 = 2 in.) =	3.174	acre-feet	2.00	inches
50-yr Runoff Volume (P1 = 2.25 in.) =	3.723	acre-feet	2.25	inches
100-yr Runoff Volume (P1 = 2.52 in.) =	4.395	acre-feet	2.52	inches
500-yr Runoff Volume (P1 = 3.14 in.) =	5.785	acre-feet		inches
Approximate 2-yr Detention Volume =	1.128	acre-feet		
Approximate 5-yr Detention Volume =	1.642	acre-feet		
Approximate 10-yr Detention Volume =	1.925	acre-feet		
Approximate 25-yr Detention Volume =	2.083	acre-feet		
Approximate 50-yr Detention Volume =	2.160	acre-feet		
Approximate 100-yr Detention Volume =	2.433	acre-feet		

Define Zones and Basin Geometry

Zone 1 Volume (WQCV) =	0.459	acre-feet
Zone 2 Volume (EURV - Zone 1) =	0.858	acre-feet
Zone 3 (100yr + 1 / 2 WQCV - Zones 1 & 2) =	1.346	acre-feet
Total Detention Basin Volume =	2.663	acre-feet
Initial Surcharge Volume (ISV) =	user	ft^3
Initial Surcharge Depth (ISD) =	user	ft
Total Available Detention Depth (H_{total}) =	user	ft
Depth of Trickle Channel (H_{TC}) =	user	ft
Slope of Trickle Channel (S_{TC}) =	user	ft/ft
Slopes of Main Basin Sides (S_{main}) =	user	H:V
Basin Length-to-Width Ratio ($R_{L/W}$) =	user	
Initial Surcharge Area (A_{ISV}) =	user	ft^2
Surcharge Volume Length (L_{ISV}) =	user	ft
Surcharge Volume Width (W_{ISV}) =	user	ft
Depth of Basin Floor (H_{FLOOR}) =	user	ft
Length of Basin Floor (L_{FLOOR}) =	user	ft
Width of Basin Floor (W_{FLOOR}) =	user	ft
Area of Basin Floor (A_{FLOOR}) =	user	ft^2
Volume of Basin Floor (V_{FLOOR}) =	user	ft^3
Depth of Main Basin (H_{MAIN}) =	user	ft
Length of Main Basin (L_{MAIN}) =	user	ft
Width of Main Basin (W_{MAIN}) =	user	ft
Area of Main Basin (A_{MAIN}) =	user	ft^2
Volume of Main Basin (V_{MAIN}) =	user	ft^3
Calculated Total Basin Volume (V_{total}) =	**user**	acre-feet

Depth Increment = 0.20 ft

Stage - Storage Description	Stage (ft)	Optional Override Stage (ft)	Length (ft)	Width (ft)	Area (ft^2)	Optional Override Area (ft^2)	Area (acre)	Volume (ft^3)	Volume (ac-ft)
Top of Micropool	--	0.00	--	--	--	40	0.001		
5755.5	--	0.31	--	--	--	50	0.001	14	0.000
5756	--	0.81	--	--	--	390	0.009	124	0.003
5757	--	1.81	--	--	--	1,984	0.046	1,311	0.030
5758	--	2.81	--	--	--	16,528	0.379	10,567	0.243
5759	--	3.81	--	--	--	35,024	0.804	36,343	0.834
5760	--	4.81	--	--	--	44,899	1.031	76,304	1.752
5761	--	5.81	--	--	--	49,298	1.132	123,403	2.833
5762	--	6.81	--	--	--	53,206	1.221	174,655	4.010
5763	--	7.81	--	--	--	57,080	1.310	229,798	5.275
5764	--	8.81	--	--	--	62,100	1.426	289,388	6.643
5765	--	9.81	--	--	--	67,454	1.549	354,165	8.131
5766	--	10.81	--	--	--	72,475	1.664	424,129	9.737

Pond C3 Developed Inflow Hydrograph --- asbuilt Pond C4 Outflow + C10 Basin

Pond C3 Inflow = asbuilt Pond C4 + direct tributary area

		2 Year	CUHP	2yr Combined	5 Year	CUHP	5yr Combined	10 Year	CUHP	10yr Combined	25 Year	CUHP	25yr Combined	50 Year	CUHP	50yr Combined	100 Year	CUHP	100yr Combined
Time [hr]	Time [min]	Pond C4 Outflow2 - [cfs]	2 Year [cfs]	Hydrograph	Pond C4 Outflow2 - [cfs]	5 Year [cfs]	Hydrograph	Pond C4 Outflow2 - [cfs]	10 Year [cfs]	Hydrograph	Pond C4 Outflow2 - [cfs]	25 Year [cfs]	Hydrograph	Pond C4 Outflow2 - [cfs]	50 Year [cfs]	Hydrograph	Pond C4 Outflow2 - [cfs]	100 Year [cfs]	Hydrograph
0.00	0.00	0.00	0.00	0.00	0.00	0.00	0.00	0.00	0.00	0.00	0.00	0.00	0.00	0.00	0.00	0.00	0.00	0.00	0.00
0.08	5.00	0.00	0.00	0.00	0.00	0.00	0.00	0.00	0.00	0.00	0.00	0.00	0.00	0.13	0.00	0.13	0.06	0.00	0.06
0.17	10.00	0.24	0.00	0.24	0.26	0.00	0.26	0.27	0.00	0.27	0.26	0.00	0.26	0.27	0.29	0.56	0.27	0.03	0.29
0.25	15.00	0.32	2.54	2.86	0.34	4.14	4.49	0.35	5.13	5.49	0.33	3.45	3.77	0.34	4.27	4.61	0.34	4.20	4.54
0.33	20.00	0.44	8.76	9.20	0.52	11.77	12.28	0.57	14.53	15.09	0.45	8.43	8.87	0.48	9.78	10.26	0.50	10.52	11.02
0.42	25.00	0.59	20.44	21.04	0.91	31.71	32.62	2.44	40.41	42.85	0.65	20.03	20.68	1.16	24.46	25.62	1.85	27.48	29.33
0.50	30.00	1.18	26.78	27.96	3.43	37.99	41.42	4.32	45.89	50.20	3.96	53.09	57.05	4.66	62.73	67.39	5.16	70.67	75.83
0.58	35.00	2.95	24.15	27.10	4.48	33.33	37.81	5.30	39.98	45.28	5.56	58.17	63.73	11.91	67.93	79.84	34.54	80.78	115.32
0.67	40.00	3.70	20.70	24.41	5.12	27.98	33.10	5.93	33.64	39.58	24.54	54.13	78.68	35.81	62.96	98.77	37.63	74.38	112.01
0.75	45.00	4.16	16.52	20.69	5.56	22.99	28.54	17.02	28.10	45.12	35.64	46.38	82.02	37.68	53.91	91.60	39.81	65.87	105.68
0.83	50.00	4.48	13.25	17.72	5.87	19.04	24.91	28.41	22.85	51.26	36.82	40.15	76.96	38.98	46.60	85.58	41.35	56.56	97.91
0.92	55.00	4.70	11.05	15.76	8.69	15.88	24.57	34.44	19.61	54.04	37.60	32.28	69.87	39.85	37.57	77.43	42.46	47.10	89.57
1.00	60.00	4.87	9.54	14.41	13.02	13.57	26.58	34.59	17.21	51.80	38.09	27.13	65.22	40.43	31.66	72.09	43.28	41.02	84.30
1.08	65.00	4.99	8.16	13.15	16.03	11.50	27.52	34.64	14.96	49.59	38.35	23.19	61.54	40.75	27.12	67.88	43.80	36.40	80.20
1.17	70.00	5.07	6.38	11.46	17.74	9.65	27.39	34.63	12.91	47.54	38.41	18.55	56.96	40.87	21.79	62.66	44.02	28.19	72.21
1.25	75.00	5.14	4.93	10.06	18.46	7.69	26.15	34.57	11.26	45.83	38.33	14.54	52.88	40.85	17.18	58.03	44.05	21.30	65.35
1.33	80.00	5.19	4.06	9.25	18.54	6.44	24.98	34.44	9.60	44.04	38.16	10.73	48.89	40.73	12.68	53.42	43.94	14.84	58.77
1.42	85.00	5.24	3.65	8.89	18.27	5.79	24.06	32.01	8.07	40.08	37.93	8.55	46.48	40.54	10.11	50.65	43.73	10.85	54.58
1.50	90.00	5.28	3.42	8.70	17.87	5.37	23.25	28.79	7.00	35.79	37.64	6.82	44.46	40.29	8.07	48.36	43.47	8.38	51.85
1.58	95.00	5.32	3.31	8.63	17.26	5.10	22.36	26.04	6.25	32.30	37.31	5.71	43.03	40.00	6.76	46.76	43.17	6.83	50.00
1.67	100.00	5.36	3.23	8.59	16.40	4.46	20.85	23.78	5.73	29.51	36.96	4.95	41.92	39.69	5.86	45.55	42.84	5.75	48.60
1.75	105.00	5.40	3.16	8.56	15.46	3.98	19.44	21.93	5.37	27.31	36.60	4.49	41.09	39.36	5.30	44.66	42.50	5.04	47.54
1.83	110.00	5.43	3.12	8.54	14.56	3.64	18.19	20.37	5.11	25.48	36.23	4.15	40.38	39.03	4.89	43.92	42.16	4.54	46.70
1.92	115.00	5.45	2.67	8.12	13.72	3.38	17.10	18.88	4.73	23.62	35.85	3.94	39.79	38.68	4.64	43.32	41.81	4.25	46.06
2.00	120.00	5.45	2.34	7.79	12.68	3.10	15.78	17.12	4.16	21.28	35.44	3.82	39.25	38.30	4.49	42.79	41.43	4.16	45.59
2.08	125.00	5.44	1.68	7.12	11.36	2.22	13.58	15.03	2.94	17.96	34.97	2.72	37.69	37.87	3.20	41.06	41.00	2.97	43.98
2.17	130.00	5.42	1.17	6.59	10.01	1.54	11.56	12.96	2.04	15.00	34.45	1.90	36.35	37.38	2.23	39.61	40.54	2.09	42.63
2.25	135.00	5.40	0.80	6.20	8.79	1.05	9.84	11.11	1.41	12.52	26.72	1.31	28.03	36.87	1.54	38.41	40.05	1.46	41.50
2.33	140.00	5.36	0.54	5.91	7.75	0.69	8.44	9.54	0.95	10.49	20.46	0.89	21.35	36.33	1.04	37.37	39.54	0.98	40.52
2.42	145.00	5.33	0.35	5.68	6.92	0.45	7.36	8.26	0.62	8.88	16.06	0.59	16.64	35.77	0.69	36.46	39.01	0.65	39.66
2.50	150.00	5.29	0.22	5.51	6.30	0.29	6.59	7.25	0.40	7.65	12.88	0.39	13.27	35.20	0.46	35.65	38.47	0.43	38.89
2.58	155.00	5.25	0.12	5.37	5.95	0.17	6.12	6.50	0.23	6.73	10.55	0.23	10.79	34.61	0.27	34.88	37.91	0.25	38.17
2.67	160.00	5.21	0.05	5.26	5.90	0.08	5.98	6.03	0.10	6.13	8.86	0.11	8.97	28.41	0.13	28.55	37.35	0.12	37.48
2.75	165.00	5.17	0.02	5.19	5.86	0.03	5.89	5.91	0.03	5.94	7.62	0.04	7.66	21.16	0.04	21.21	36.79	0.04	36.83
2.83	170.00	5.13	0.00	5.13	5.82	0.00	5.82	5.87	0.00	5.87	6.74	0.00	6.74	16.31	0.00	16.31	36.21	0.00	36.21
2.92	175.00	5.09	0.00	5.09	5.78	0.00	5.78	5.83	0.00	5.83	6.16	0.00	6.16	12.95	0.00	12.95	35.63	0.00	35.63
3.00	180.00	5.05	0.00	5.05	5.74	0.00	5.74	5.80	0.00	5.80	5.93	0.00	5.93	10.58	0.00	10.58	35.05	0.00	35.05
3.08	185.00	5.01	0.00	5.01	5.71	0.00	5.71	5.76	0.00	5.76	5.89	0.00	5.89	8.87	0.00	8.87	34.46	0.00	34.46
3.17	190.00	4.97	0.00	4.97	5.67	0.00	5.67	5.72	0.00	5.72	5.85	0.00	5.85	7.63	0.00	7.63	26.05	0.00	26.05
3.25	195.00	4.93	0.00	4.93	5.63	0.00	5.63	5.68	0.00	5.68	5.81	0.00	5.81	6.75	0.00	6.75	19.60	0.00	19.60
3.33	200.00	4.89	0.00	4.89	5.59	0.00	5.59	5.64	0.00	5.64	5.77	0.00	5.77	6.16	0.00	6.16	15.24	0.00	15.24
3.42	205.00	4.85	0.00	4.85	5.55	0.00	5.55	5.60	0.00	5.60	5.73	0.00	5.73	5.93	0.00	5.93	12.20	0.00	12.20
3.50	210.00	4.81	0.00	4.81	5.51	0.00	5.51	5.56	0.00	5.56	5.69	0.00	5.69	5.89	0.00	5.89	10.04	0.00	10.04
3.58	215.00	4.76	0.00	4.76	5.47	0.00	5.47	5.52	0.00	5.52	5.65	0.00	5.65	5.85	0.00	5.85	8.48	0.00	8.48
3.67	220.00	4.72	0.00	4.72	5.43	0.00	5.43	5.48	0.00	5.48	5.61	0.00	5.61	5.81	0.00	5.81	7.35	0.00	7.35
3.75	225.00	4.68	0.00	4.68	5.39	0.00	5.39	5.44	0.00	5.44	5.58	0.00	5.58	5.77	0.00	5.77	6.56	0.00	6.56
3.83	230.00	4.64	0.00	4.64	5.35	0.00	5.35	5.40	0.00	5.40	5.54	0.00	5.54	5.73	0.00	5.73	6.05	0.00	6.05
3.92	235.00	4.60	0.00	4.60	5.31	0.00	5.31	5.36	0.00	5.36	5.50	0.00	5.50	5.69	0.00	5.69	5.92	0.00	5.92
4.00	240.00	4.56	0.00	4.56	5.27	0.00	5.27	5.32	0.00	5.32	5.46	0.00	5.46	5.65	0.00	5.65	5.88	0.00	5.88
4.08	245.00	4.52	0.00	4.52	5.23	0.00	5.23	5.28	0.00	5.28	5.42	0.00	5.42	5.61	0.00	5.61	5.84	0.00	5.84
4.17	250.00	4.47	0.00	4.47	5.19	0.00	5.19	5.24	0.00	5.24	5.38	0.00	5.38	5.58	0.00	5.58	5.80	0.00	5.80
4.25	255.00	4.43	0.00	4.43	5.15	0.00	5.15	5.20	0.00	5.20	5.34	0.00	5.34	5.54	0.00	5.54	5.76	0.00	5.76
4.33	260.00	4.39	0.00	4.39	5.11	0.00	5.11	5.16	0.00	5.16	5.30	0.00	5.30	5.50	0.00	5.50	5.72	0.00	5.72
4.42	265.00	4.35	0.00	4.35	5.07	0.00	5.07	5.12	0.00	5.12	5.26	0.00	5.26	5.46	0.00	5.46	5.68	0.00	5.68
4.50	270.00	4.31	0.00	4.31	5.03	0.00	5.03	5.08	0.00	5.08	5.22	0.00	5.22	5.42	0.00	5.42	5.64	0.00	5.64
4.58	275.00	4.27	0.00	4.27	4.99	0.00	4.99	5.04	0.00	5.04	5.18	0.00	5.18	5.38	0.00	5.38	5.60	0.00	5.60
4.67	280.00	4.22	0.00	4.22	4.95	0.00	4.95	5.00	0.00	5.00	5.14	0.00	5.14	5.34	0.00	5.34	5.56	0.00	5.56
4.75	285.00	4.18	0.00	4.18	4.91	0.00	4.91	4.96	0.00	4.96	5.10	0.00	5.10	5.30	0.00	5.30	5.53	0.00	5.53
4.83	290.00	4.14	0.00	4.14	4.87	0.00	4.87	4.92	0.00	4.92	5.06	0.00	5.06	5.26	0.00	5.26	5.49	0.00	5.49
4.92	295.00	4.10	0.00	4.10	4.83	0.00	4.83	4.88	0.00	4.88	5.02	0.00	5.02	5.22	0.00	5.22	5.45	0.00	5.45
5.00	300.00	4.05	0.00	4.05	4.78	0.00	4.78	4.84	0.00	4.84	4.98	0.00	4.98	5.18	0.00	5.18	5.41	0.00	5.41
5.08	305.00	4.01	0.00	4.01	4.74	0.00	4.74	4.80	0.00	4.80	4.93	0.00	4.93	5.14	0.00	5.14	5.37	0.00	5.37
5.17	310.00	3.97	0.00	3.97	4.70	0.00	4.70	4.76	0.00	4.76	4.89	0.00	4.89	5.10	0.00	5.10	5.33	0.00	5.33
5.25	315.00	3.92	0.00	3.92	4.66	0.00	4.66	4.72	0.00	4.72	4.85	0.00	4.85	5.06	0.00	5.06	5.29	0.00	5.29
5.33	320.00	3.88	0.00	3.88	4.62	0.00	4.62	4.67	0.00	4.67	4.81	0.00	4.81	5.02	0.00	5.02	5.25	0.00	5.25
5.42	325.00	3.84	0.00	3.84	4.58	0.00	4.58	4.63	0.00	4.63	4.77	0.00	4.77	4.98	0.00	4.98	5.21	0.00	5.21
5.50	330.00	3.79	0.00	3.79	4.54	0.00	4.54	4.59	0.00	4.59	4.73	0.00	4.73	4.94	0.00	4.94	5.17	0.00	5.17
5.58	335.00	3.75	0.00	3.75	4.49	0.00	4.49	4.55	0.00	4.55	4.69	0.00	4.69	4.89	0.00	4.89	5.13	0.00	5.13
5.67	340.00	3.71	0.00	3.71	4.45	0.00	4.45	4.51	0.00	4.51	4.65	0.00	4.65	4.85	0.00	4.85	5.09	0.00	5.09
5.75	345.00	3.66	0.00	3.66	4.41	0.00	4.41	4.47	0.00	4.47	4.61	0.00	4.61	4.81	0.00	4.81	5.05	0.00	5.05
5.83	350.00	3.62	0.00	3.62	4.37	0.00	4.37	4.43	0.00	4.43	4.56	0.00	4.56	4.77	0.00	4.77	5.01	0.00	5.01
5.92	355.00	3.58	0.00	3.58	4.33	0.00	4.33	4.38	0.00	4.38	4.52	0.00	4.52	4.73	0.00	4.73	4.96	0.00	4.96
6.00	360.00	3.53	0.00	3.53	4.29	0.00	4.29	4.34	0.00	4.34	4.54	0.00	4.54	4.69	0.00	4.69	4.92	0.00	4.92

MAINTENANCE ACCESS ROAD
NO SCALE

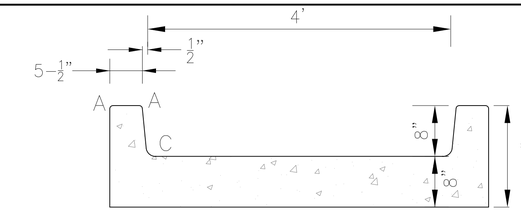

CONCRETE LOW FLOW CHANNEL DETAIL WITH 8" CURBHEAD
NO SCALE

LENGTH FOR RADII
A = 1/2"
C = 1-1/2"

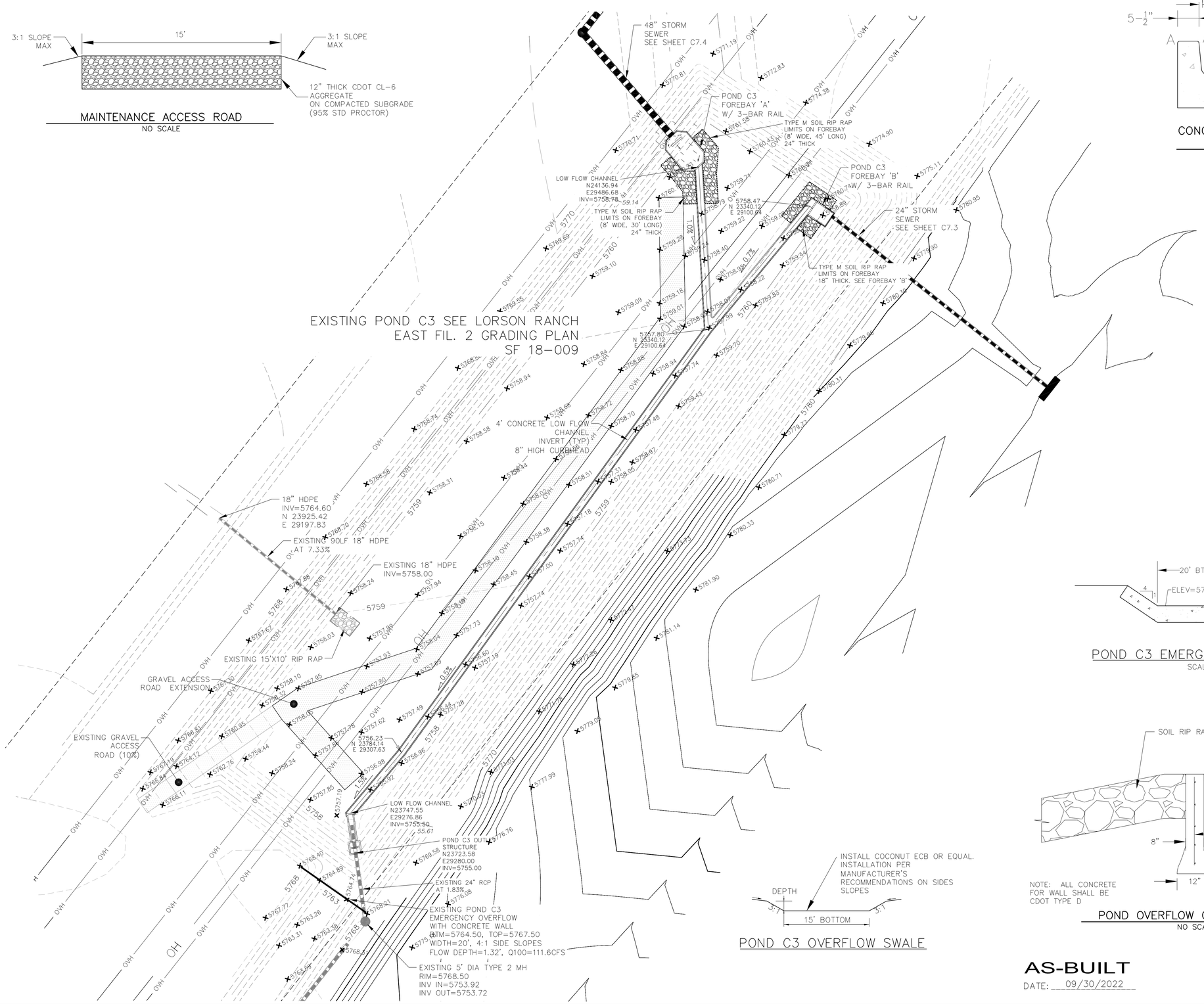

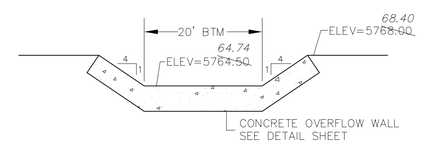

POND C3 EMERGENCY OVERFLOW PROFILE
SCALE: NTS

POND C3 OVERFLOW SWALE

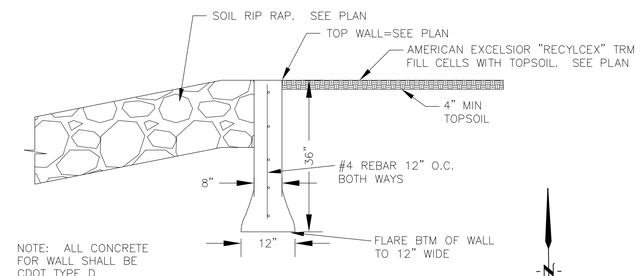

NOTE: ALL CONCRETE FOR WALL SHALL BE CDOT TYPE D

POND OVERFLOW CONCRETE WALL
NO SCALE

AS-BUILT
DATE: 09/30/2022

N

30 20 10 0 30 60
SCALE: 1"=30'

CORE ENGINEERING GROUP
15004 1ST AVENUE S.
BURNSVILLE, MN 55306
PH: 719.570.1100
CONTACT: RICHARD L. SCHINDLER, P.E.
EMAIL: Rich@ceg1.com

NO.	DESCRIPTION	DATE

PREPARED FOR:
LORSON, LLC
212 N. WAHSATCH AVE, SUITE 301
COLORADO SPRINGS, COLORADO 80903
(719) 635-3200
CONTACT: JEFF MARK

PROJECT:
THE HILLS COLLECTOR STREET CONSTRUCTION
FONTAINE BLVD. GRAYLING PK
LORSON BLVD. WILLETTE DR. LAMPRIEY DR
COLORADO SPRINGS, COLORADO

DRAWN: RLS
DESIGNED: RLS
CHECKED: RLS

POND C3 FOREBAY, LOW FLOW CHANNEL AND OUTLET STRUCTURE LAYOUT

COLORADO REGISTERED PROFESSIONAL ENGINEER 33997 11-12-2020

DATE: NOV 12, 2020
PROJECT NO. 100.061
SHEET NUMBER C9.8
TOTAL SHEETS: 58

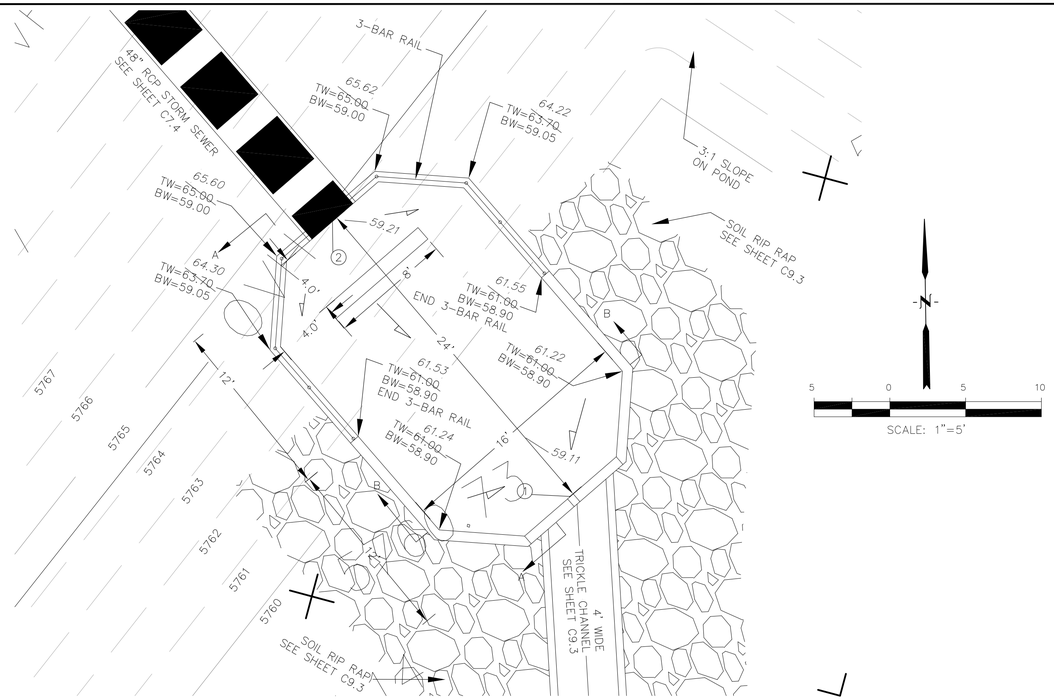

POND C3 – FOREBAY 'A' LAYOUT
SCALE: 1"=5'

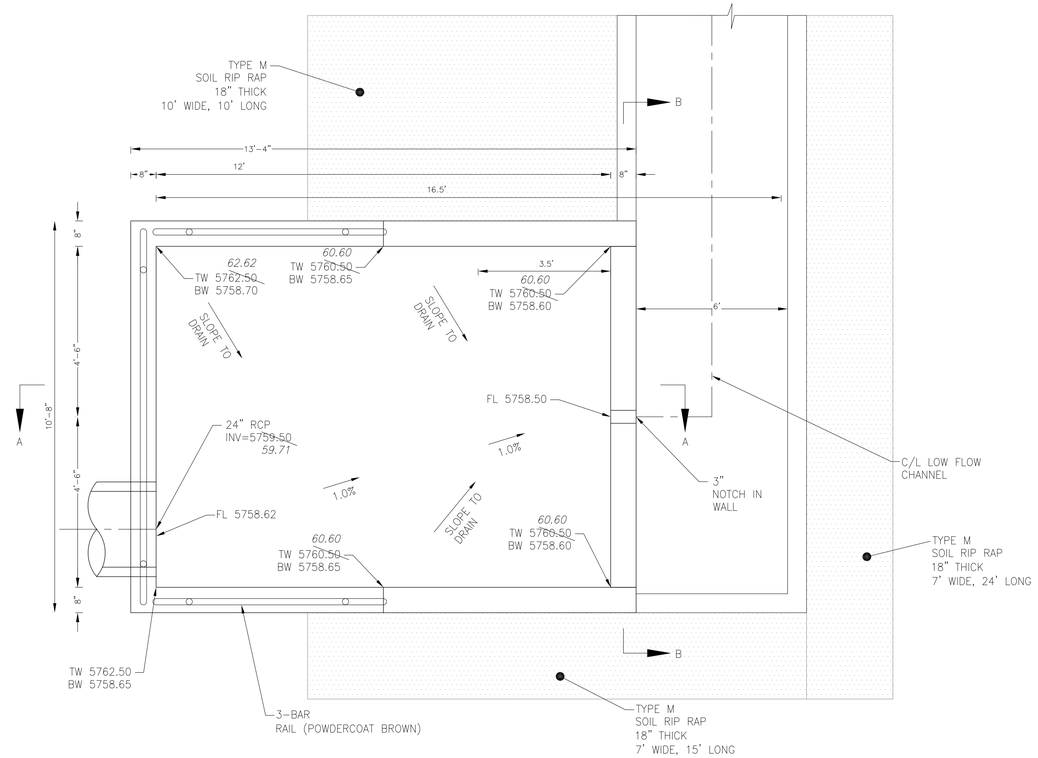

POND C3 – FOREBAY 'B' LAYOUT
SCALE: 1"=5'

POINT TABLE (FOREBAY)				
NUMBER	NORTHING	EASTING	ELEVATION	NOTES
1	24137.45	29486.24	5758.80	FOREBAY BOTTOM
2	24155.60	29470.53	5758.95	FOREBAY BOTTOM, INV 48"=5759.70

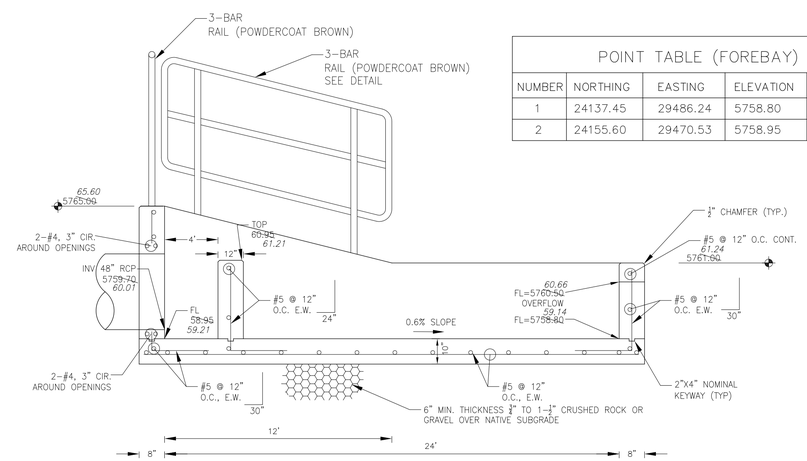

FOREBAY 'A' SECTION A–A
NO SCALE

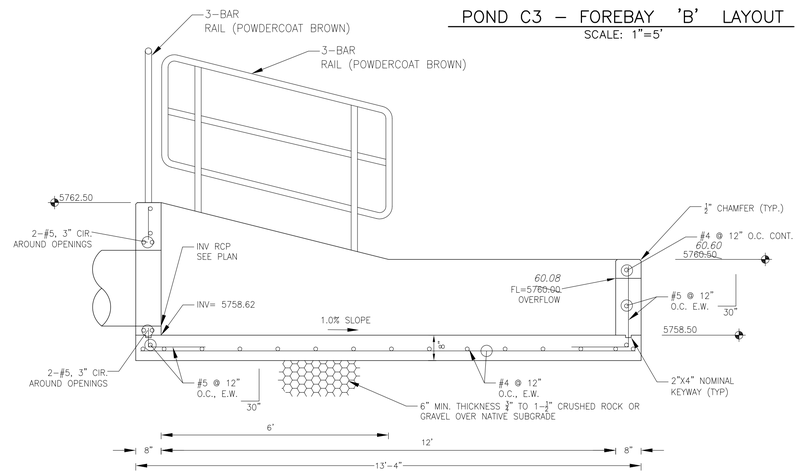

FOREBAY 'B' SECTION A–A
NO SCALE

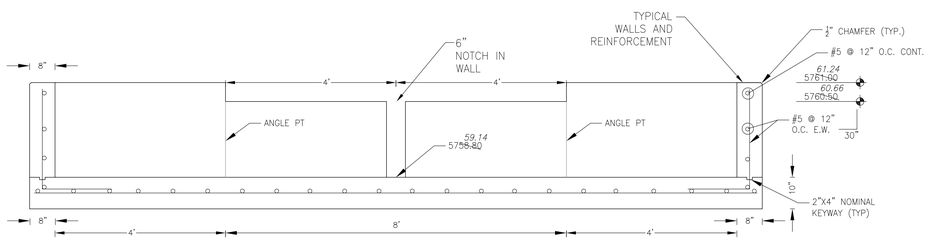

NOTE: ALL CONCRETE FOR FOREBAY SHALL BE CDOT TYPE D

FOREBAY 'A' SECTION B–B
NO SCALE

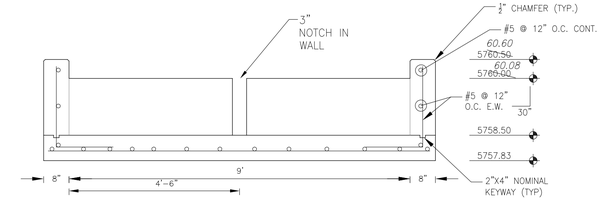

FOREBAY 'B' SECTION B–B
NO SCALE

AS-BUILT
DATE: 09/30/2022

CORE
ENGINEERING GROUP
15004 1ST AVENUE S.
BURNSVILLE, MN 55306
PH: 719.570.1100
CONTACT: RICHARD L. SCHINDLER, P.E.
EMAIL: Rich@ceg1.com

NO.	DESCRIPTION	DATE

PREPARED FOR:
LORSON, LLC
212 N. WAHSATCH AVE, SUITE 301
COLORADO SPRINGS, COLORADO 80903
(719) 635-3200
CONTACT: JEFF MARK

PROJECT:
THE HILLS COLLECTOR STREET CONSTRUCTION
FONTAINE BLVD - GRAYLING DR
SWALLOWTAIL PKWY - LAMPRIEY DR
LORSON RANCH FILING 1
COLORADO SPRINGS, COLORADO

DRAWN: RLS
DESIGNED: RLS
CHECKED: RLS

POND C3

FOREBAY DETAILS

COLORADO REGISTERED PROFESSIONAL ENGINEER
RICHARD L. SCHINDLER
33997
11-12-2020

DATE:
NOV 12, 2020

PROJECT NO.
100.061

SHEET NUMBER
C9.9
TOTAL SHEETS: 58

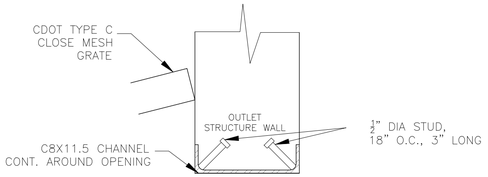

DETAIL A
NO SCALE

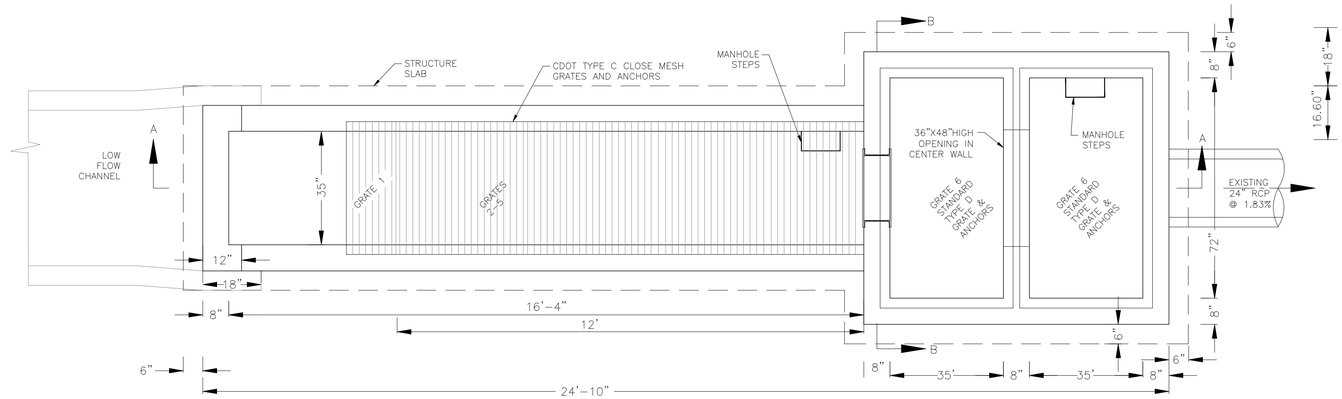

OUTLET STRUCTURE DETAIL – PLAN VIEW
NO SCALE

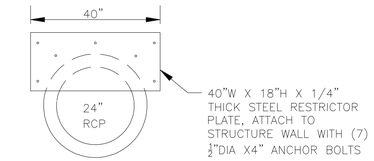

OUTLET RESTRICTOR PLATE
NO SCALE

NOTE:
AFTER CONCRETE STRUCTURE HAS BEEN POURED ALL GRATE DIMENSIONS SHALL BE FIELD VERIFIED PRIOR TO GRATE CONSTRUCTION

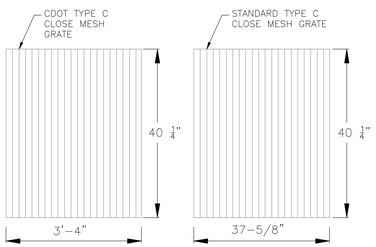

GRATE 1
NO SCALE

GRATES 2,3,4,5
NO SCALE

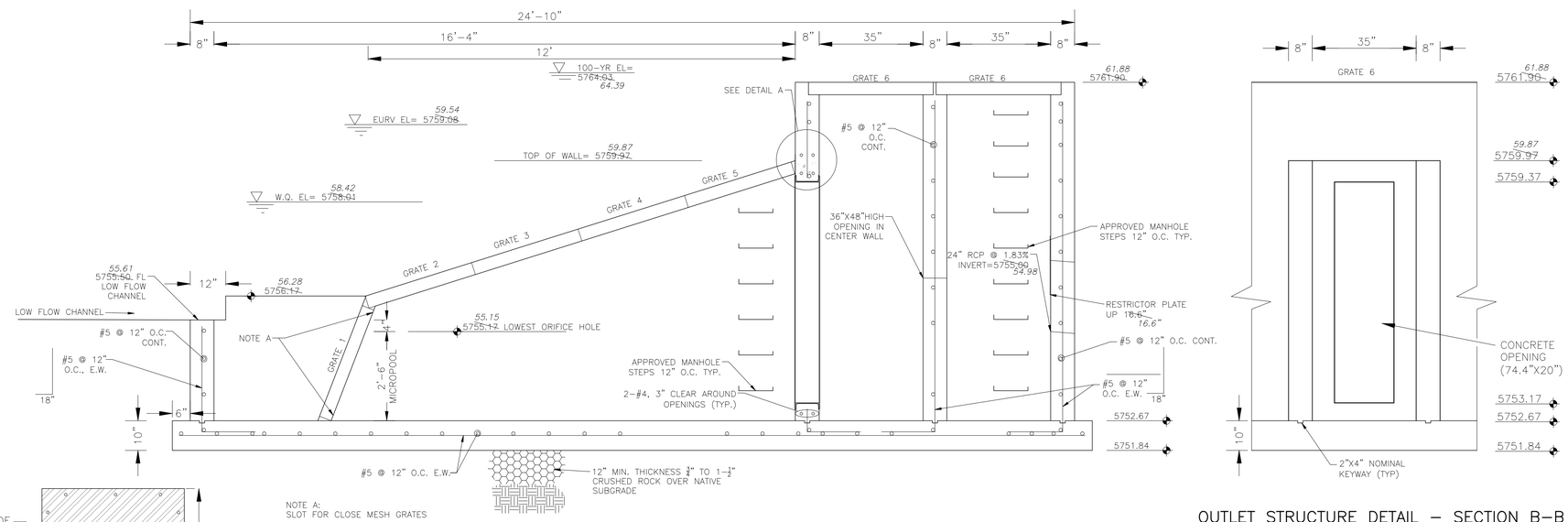

NOTE A:
SLOT FOR CLOSE MESH GRATES

OUTLET STRUCTURE DETAIL – SECTION A–A
NO SCALE

OUTLET STRUCTURE DETAIL – SECTION B–B
NO SCALE

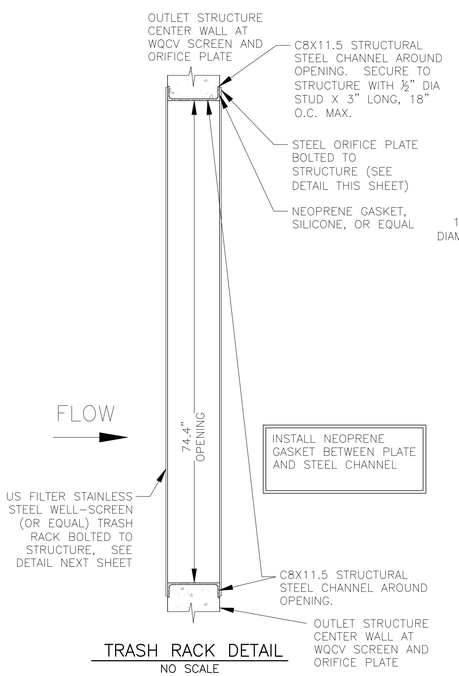

TRASH RACK DETAIL
NO SCALE

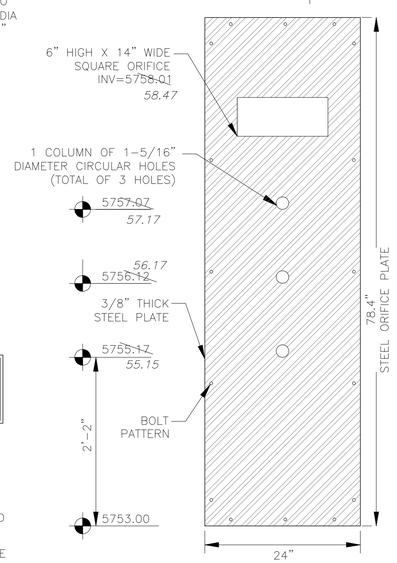

ORIFICE PLATE DETAIL
NO SCALE

OUTLET STRUCTURE, FOREBAY, AND DRAIN CHANNEL NOTES:

1. PRIOR TO CONSTRUCTION, CONTRACTOR SHALL PROVIDE SHOP DRAWINGS FOR ALL COMPONENTS OF THE OUTLET STRUCTURE.
2. GRADE 60 REINFORCING STEEL REQUIRED. SEE TABLE FOR THE MINIMUM LAP SPLICE LENGTH FOR REINFORCING BARS. ALL REINFORCING STEEL SHALL HAVE A TWO-INCH MINIMUM CLEARANCE FROM EDGE OF CONCRETE, UNLESS OTHERWISE NOTED.

BAR SIZE	#4	#5	#6
MIN. SPLICE LENGTH	1'-3"	1'-7"	2'-0"

3. CONCRETE FOR THE OUTLET STRUCTURE AND FOREBAY SHALL BE CDOT CLASS D CONCRETE.
4. CONCRETE FOR DRAIN CHANNELS SHALL BE CDOT CLASS B CONCRETE
5. EXPANSION JOINT MATERIAL SHALL MEET AASHTO SPECIFICATION M-213. EXPANSION JOINT MATERIAL SHALL BE ½" THICK, SHALL EXTEND THE FULL DEPTH OF CONTACT SURFACE AND THE JOINT SHALL BE SEALED, REFER TO DETAILS.
6. ALL EXPOSED CONCRETE CORNERS SHALL HAVE A ¾" CHAMFER UNLESS OTHERWISE NOTED.
7. SUBGRADE TO BE 12" THICK CLEAN FILL COMPACTED TO 95% STANDARD PROCTOR DENSITY PER ASTM M698 UNDER STRUCTURE.
8. REFER TO POND DETAILS FOR PRESEDIMENTATION/FOREBAY DESIGN.
9. ENGINEER SHALL BE NOTIFIED PRIOR TO BEGINNING CONSTRUCITON OF OUTLET STRUCTURE TO SCHEDULE OBSERVATION VISITS FOR STRUCTURES.

WQCV WELL-SCREEN NOTES:

1. Well-Screen shall be stainless steel and attached by stainless steel bolts along edge of the mounting frame.

2. WQCV Well Screen
- Type of Screen: Stainless steel #93 Vee Wire (Johnson Vee Wire (tm) Stainless Steel Screen or equivalent with 60% open area)
- Screen slot opening dimension: 0.139" (Screen #93 Vee Wire Slot Opening)
- Type and Size of Support Rod: TE 0.074"X0.50"
- Spacing of Support Rod (O.C.): 1.0 Inch
- Total Screen Thickness: 0.655"
- Carbon Steel Holding Frame Type: 3/4" x 1.0" angle

AS-BUILT
DATE: 09/30/2022

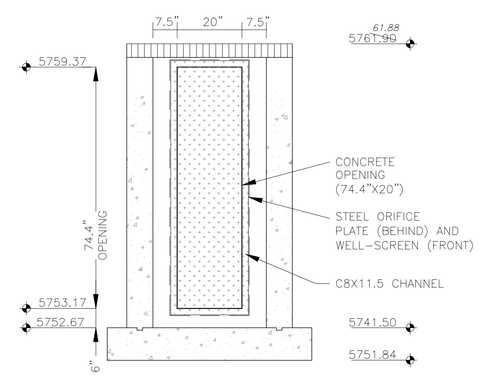

OUTLET STRUCTURE DETAIL – SECTION B–B
NO SCALE

CORE ENGINEERING GROUP
15004 1ST AVENUE S.
BURNSVILLE, MN 55306
PH: 719.370.1100
CONTACT: RICHARD L. SCHINDLER, P.E.
EMAIL: Richard@ceg1.com

NO.	DESCRIPTION	DATE

PREPARED FOR:
LORSON, LLC
212 N. WAHSATCH AVE, SUITE 301
COLORADO SPRINGS, COLORADO 80903
(719) 635-3200
CONTACT: JEFF MARK

PROJECT:
THE HILLS COLLECTOR STREET CONSTRUCTION
FONTAINE BLVD. GRAVELLA DR.
LORSON BLVD-WALLEYE DR-LAMPREY DR
COLORADO SPRINGS, COLORADO

DRAWN: RLS
DESIGNED: RLS
CHECKED: RLS

POND C3
FULL SPECTRUM
OUTLET STRUCTURE DETAILS

COLORADO REGISTERED PROFESSIONAL ENGINEER
RICHARD L. SCHINDLER
33997
11-12-2020

DATE: NOV 12, 2020
PROJECT NO. 100.061
SHEET NUMBER C9.15
TOTAL SHEETS: 58

DETENTION BASIN OUTLET STRUCTURE DESIGN

MHFD-Detention, Version 4.02 (February 2020)

Project: **The Hills at Lorson Ranch**

Basin ID: **Pond C4-asbuilt**

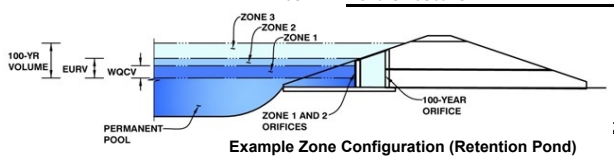

Example Zone Configuration (Retention Pond)

	Estimated Stage (ft)	Estimated Volume (ac-ft)	Outlet Type
Zone 1 (WQCV)	3.06	1.488	Orifice Plate
Zone 2 (EURV)	5.56	2.980	Rectangular Orifice
Z3 (100+1/2WQCV)	8.58	4.225	Weir&Pipe (Restrict)
Total (all zones)		8.692	

User Input: Orifice at Underdrain Outlet (typically used to drain WQCV in a Filtration BMP)

Underdrain Orifice Invert Depth =	N/A	ft (distance below the filtration media surface)	Underdrain Orifice Area =	N/A	ft^2
Underdrain Orifice Diameter =	N/A	inches	Underdrain Orifice Centroid =	N/A	feet

Calculated Parameters for Underdrain

User Input: Orifice Plate with one or more orifices or Elliptical Slot Weir (typically used to drain WQCV and/or EURV in a sedimentation BMP)

Invert of Lowest Orifice =	0.00	ft (relative to basin bottom at Stage = 0 ft)	WQ Orifice Area per Row =	3.250E-02	ft^2
Depth at top of Zone using Orifice Plate =	3.06	ft (relative to basin bottom at Stage = 0 ft)	Elliptical Half-Width =	N/A	feet
Orifice Plate: Orifice Vertical Spacing =	N/A	inches	Elliptical Slot Centroid =	N/A	feet
Orifice Plate: Orifice Area per Row =	4.68	sq. inches (use rectangular openings)	Elliptical Slot Area =	N/A	ft^2

Calculated Parameters for Plate

User Input: Stage and Total Area of Each Orifice Row (numbered from lowest to highest)

	Row 1 (required)	Row 2 (optional)	Row 3 (optional)	Row 4 (optional)	Row 5 (optional)	Row 6 (optional)	Row 7 (optional)	Row 8 (optional)
Stage of Orifice Centroid (ft)	0.00	1.00	2.00					
Orifice Area (sq. inches)	4.68	4.68	4.68					

	Row 9 (optional)	Row 10 (optional)	Row 11 (optional)	Row 12 (optional)	Row 13 (optional)	Row 14 (optional)	Row 15 (optional)	Row 16 (optional)
Stage of Orifice Centroid (ft)								
Orifice Area (sq. inches)								

User Input: Vertical Orifice (Circular or Rectangular)

	Zone 2 Rectangular	Not Selected				
Invert of Vertical Orifice =	3.00	N/A	ft (relative to basin bottom at Stage = 0 ft)	Vertical Orifice Area =	0.68	N/A
Depth at top of Zone using Vertical Orifice =	5.56	N/A	ft (relative to basin bottom at Stage = 0 ft)	Vertical Orifice Centroid =	0.25	N/A
Vertical Orifice Height =	6.00	N/A	inches			
Vertical Orifice Width =	16.39		inches			

Calculated Parameters for Vertical Orifi

User Input: Overflow Weir (Dropbox with Flat or Sloped Grate and Outlet Pipe OR Rectangular/Trapezoidal Weir (and No Outlet Pipe)

	Zone 3 Weir	Not Selected				
Overflow Weir Front Edge Height, Ho =	5.51	N/A	ft (relative to basin bottom at Stage = 0 ft)	Height of Grate Upper Edge, H_t =	5.51	N/A
Overflow Weir Front Edge Length =	6.00	N/A	feet	Overflow Weir Slope Length =	6.00	N/A
Overflow Weir Grate Slope =	0.00	N/A	H:V	Grate Open Area / 100-yr Orifice Area =	8.02	N/A
Horiz. Length of Weir Sides =	6.00	N/A	feet	Overflow Grate Open Area w/o Debris =	25.20	N/A
Overflow Grate Open Area % =	70%	N/A	%, grate open area/total area	Overflow Grate Open Area w/ Debris =	12.60	N/A
Debris Clogging % =	50%	N/A	%			

Calculated Parameters for Overflow We

User Input: Outlet Pipe w/ Flow Restriction Plate (Circular Orifice, Restrictor Plate, or Rectangular Orifice)

	Zone 3 Restrictor	Not Selected				
Depth to Invert of Outlet Pipe =	0.00	N/A	ft (distance below basin bottom at Stage = 0 ft)	Outlet Orifice Area =	3.14	N/A
Outlet Pipe Diameter =	24.00	N/A	inches	Outlet Orifice Centroid =	1.00	N/A
Restrictor Plate Height Above Pipe Invert =	24.00		inches	Half-Central Angle of Restrictor Plate on Pipe =	3.14	N/A

Calculated Parameters for Outlet Pipe w/ Flow Restriction Pla

User Input: Emergency Spillway (Rectangular or Trapezoidal)

Spillway Invert Stage=	10.00	ft (relative to basin bottom at Stage = 0 ft)	Spillway Design Flow Depth=	1.87	feet
Spillway Crest Length =	30.00	feet	Stage at Top of Freeboard =	13.00	feet
Spillway End Slopes =	4.00	H:V	Basin Area at Top of Freeboard =	1.73	acres
Freeboard above Max Water Surface =	1.13	feet	Basin Volume at Top of Freeboard =	12.62	acre-ft

Calculated Parameters for Spillway

micropool = 0 = 5765

Routed Hydrograph Results

The user can override the default CUHP hydrographs and runoff volumes by entering new values in the Inflow Hydrographs table (Columns W through AF).

Design Storm Return Period =	WQCV	EURV	2 Year	5 Year	10 Year	25 Year	50 Year	100 Year
One-Hour Rainfall Depth (in) =	N/A	N/A	1.19	1.50	1.75	2.00	2.25	2.52
CUHP Runoff Volume (acre-ft) =	1.488	4.468	4.607	6.475	8.109	10.045	11.748	13.830
Inflow Hydrograph Volume (acre-ft) =	N/A	N/A	4.607	6.475	8.109	10.045	11.748	13.830
CUHP Predevelopment Peak Q (cfs) =	N/A	N/A	17.5	39.6	56.8	90.6	111.9	138.5
OPTIONAL Override Predevelopment Peak Q (cfs) =	N/A	N/A						
Predevelopment Unit Peak Flow, q (cfs/acre) =	N/A	N/A	0.22	0.49	0.70	1.12	1.38	1.71
Peak Inflow Q (cfs) =	N/A	N/A	93.5	131.6	158.6	200.0	232.9	277.2
Peak Outflow Q (cfs) =	0.7	6.2	5.5	18.5	34.6	38.4	40.9	44.1
Ratio Peak Outflow to Predevelopment Q =	N/A	N/A	N/A	0.5	0.6	0.4	0.4	0.3
Structure Controlling Flow =	Vertical Orifice 1	Overflow Weir 1	Vertical Orifice 1	Overflow Weir 1	Outlet Plate 1	Outlet Plate 1	Outlet Plate 1	Outlet Plate 1
Max Velocity through Grate 1 (fps) =	N/A	0.02	N/A	0.5	1.1	1.2	1.3	1.4
Max Velocity through Grate 2 (fps) =	N/A	N/A	N/A	N/A	N/A	N/A	N/A	N/A
Time to Drain 97% of Inflow Volume (hours) =	38	46	47	47	45	43	42	40
Time to Drain 99% of Inflow Volume (hours) =	**40**	50	51	52	51	51	50	50
Maximum Ponding Depth (ft) =	3.06	5.56	5.13	5.89	6.24	7.45	8.30	9.48
Area at Maximum Ponding Depth (acres) =	1.10	1.28	1.25	1.31	1.33	1.42	1.49	1.59
Maximum Volume Stored (acre-ft) =	1.497	4.476	3.919	4.903	5.364	7.017	8.272	10.092

DETENTION BASIN STAGE-STORAGE TABLE BUILDER

MHFD-Detention, Version 4.02 (February 2020)

Project: **The Hills at Lorson Ranch**

Basin ID: **Pond C4-asbuilt**

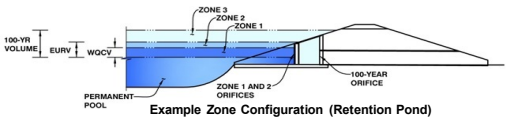

Example Zone Configuration (Retention Pond)

Watershed Information

Selected BMP Type =	**EDB**	
Watershed Area =	81.00	acres
Watershed Length =	2,300	ft
Watershed Length to Centroid =	1,200	ft
Watershed Slope =	0.050	ft/ft
Watershed Imperviousness =	55.00%	percent
Percentage Hydrologic Soil Group A =	0.0%	percent
Percentage Hydrologic Soil Group B =	40.0%	percent
Percentage Hydrologic Soil Groups C/D =	60.0%	percent
Target WQCV Drain Time =	40.0	hours
Location for 1-hr Rainfall Depths =	User Input	

After providing required inputs above including 1-hour rainfall depths, click 'Run CUHP' to generate runoff hydrographs using the embedded Colorado Urban Hydrograph Procedure.

			Optional User Overrides	
Water Quality Capture Volume (WQCV) =	1.488	acre-feet		acre-feet
Excess Urban Runoff Volume (EURV) =	4.468	acre-feet		acre-feet
2-yr Runoff Volume (P1 = 1.19 in.) =	4.607	acre-feet	1.19	inches
5-yr Runoff Volume (P1 = 1.5 in.) =	6.475	acre-feet	1.50	inches
10-yr Runoff Volume (P1 = 1.75 in.) =	8.109	acre-feet	1.75	inches
25-yr Runoff Volume (P1 = 2 in.) =	10.045	acre-feet	2.00	inches
50-yr Runoff Volume (P1 = 2.25 in.) =	11.748	acre-feet	2.25	inches
100-yr Runoff Volume (P1 = 2.52 in.) =	13.830	acre-feet	2.52	inches
500-yr Runoff Volume (P1 = 3.14 in.) =	18.178	acre-feet		inches
Approximate 2-yr Detention Volume =	3.723	acre-feet		
Approximate 5-yr Detention Volume =	5.293	acre-feet		
Approximate 10-yr Detention Volume =	6.364	acre-feet		
Approximate 25-yr Detention Volume =	6.876	acre-feet		
Approximate 50-yr Detention Volume =	7.136	acre-feet		
Approximate 100-yr Detention Volume =	7.948	acre-feet		

Define Zones and Basin Geometry

Zone 1 Volume (WQCV) =	1.488	acre-feet
Zone 2 Volume (EURV - Zone 1) =	2.980	acre-feet
Zone 3 (100yr + 1 / 2 WQCV - Zones 1 & 2) =	4.225	acre-feet
Total Detention Basin Volume =	8.692	acre-feet
Initial Surcharge Volume (ISV) =	user	ft^3
Initial Surcharge Depth (ISD) =	user	ft
Total Available Detention Depth (H_{total}) =	user	ft
Depth of Trickle Channel (H_{TC}) =	user	ft
Slope of Trickle Channel (S_{TC}) =	user	ft/ft
Slopes of Main Basin Sides (S_{main}) =	user	H:V
Basin Length-to-Width Ratio ($R_{L/W}$) =	user	
Initial Surcharge Area (A_{ISV}) =	user	ft^2
Surcharge Volume Length (L_{ISV}) =	user	ft
Surcharge Volume Width (W_{ISV}) =	user	ft
Depth of Basin Floor (H_{FLOOR}) =	user	ft
Length of Basin Floor (L_{FLOOR}) =	user	ft
Width of Basin Floor (W_{FLOOR}) =	user	ft
Area of Basin Floor (A_{FLOOR}) =	user	ft^2
Volume of Basin Floor (V_{FLOOR}) =	user	ft^3
Depth of Main Basin (H_{MAIN}) =	user	ft
Length of Main Basin (L_{MAIN}) =	user	ft
Width of Main Basin (W_{MAIN}) =	user	ft
Area of Main Basin (A_{MAIN}) =	user	ft^2
Volume of Main Basin (V_{MAIN}) =	user	ft^3
Calculated Total Basin Volume (V_{total}) =	**user**	acre-feet

micropool = 0 = 5765

Depth Increment = 0.20 ft

Stage - Storage Description	Stage (ft)	Optional Override Stage (ft)	Length (ft)	Width (ft)	Area (ft^2)	Optional Override Area (ft^2)	Area (acre)	Volume (ft^3)	Volume (ac-ft)
Top of Micropool	--	0.00	--	--	--	40	0.001		
5765.33	--	0.33	--	--	--	50	0.001	15	0.000
5766	--	1.00	--	--	--	945	0.022	348	0.008
5767	--	2.00	--	--	--	37,611	0.863	19,626	0.451
5768	--	3.00	--	--	--	47,825	1.098	62,344	1.431
5769	--	4.00	--	--	--	50,934	1.169	111,723	2.565
5770	--	5.00	--	--	--	54,035	1.240	164,208	3.770
5771	--	6.00	--	--	--	57,227	1.314	219,839	5.047
5772	--	7.00	--	--	--	60,518	1.389	278,711	6.398
5773	--	8.00	--	--	--	63,980	1.469	340,960	7.827
5774	--	9.00	--	--	--	67,560	1.551	406,730	9.337
5775	--	10.00	--	--	--	71,422	1.640	476,221	10.933
5776	--	11.00	--	--	--	75,217	1.727	549,541	12.616

MAINTENANCE ACCESS ROAD
NO SCALE

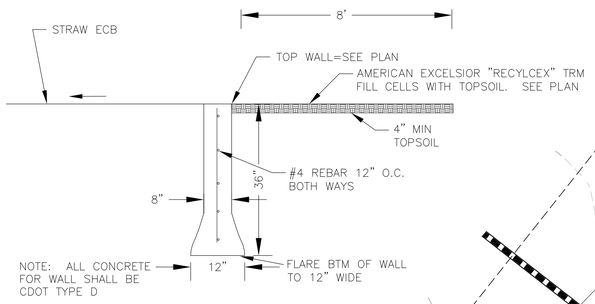

POND CONCRETE CUTOFF WALL
NO SCALE

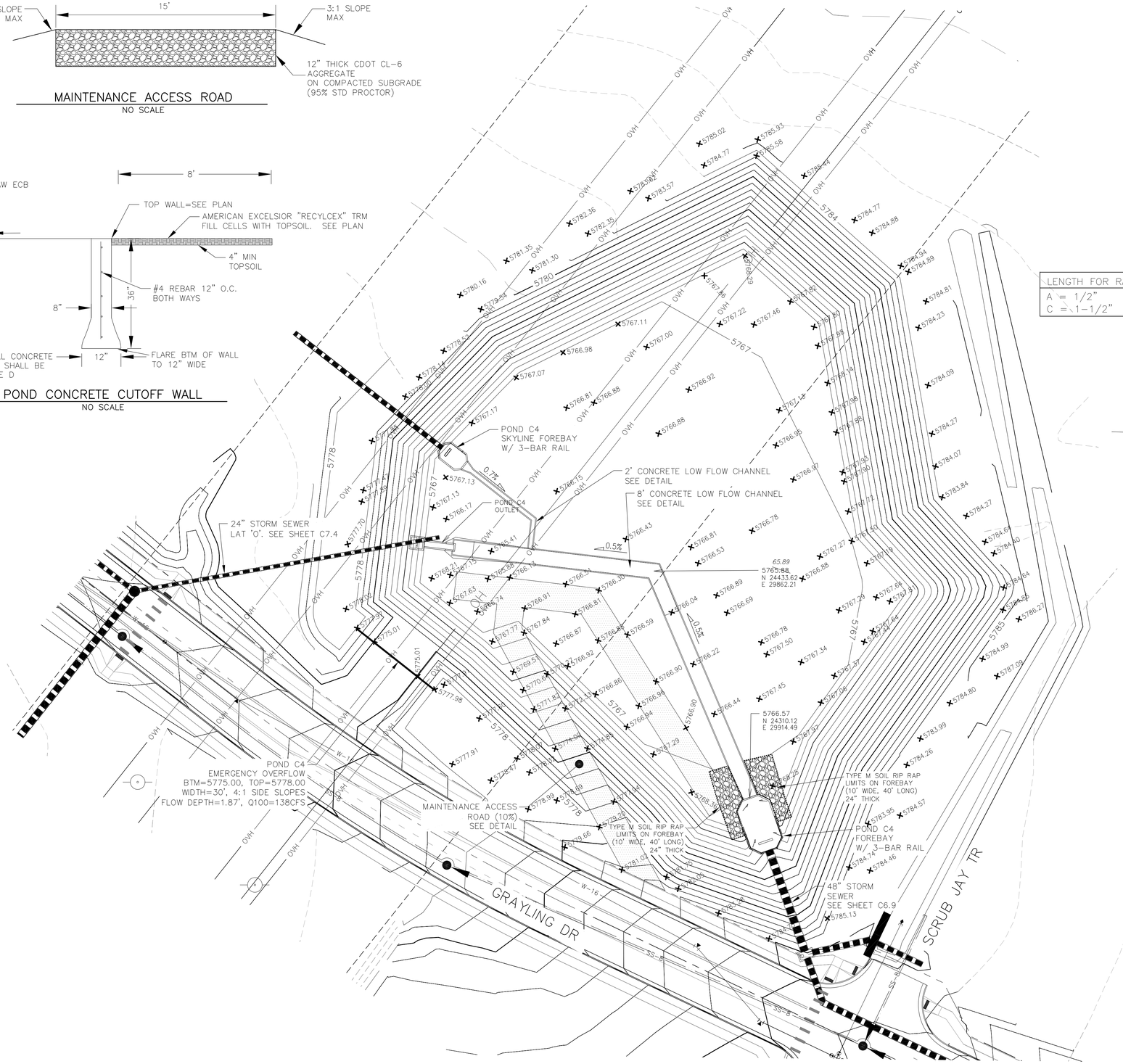

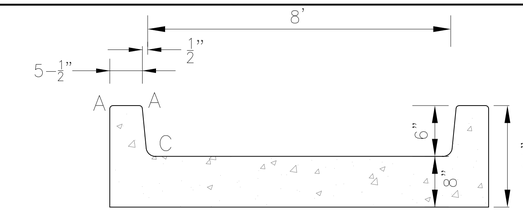

CONCRETE LOW FLOW CHANNEL DETAIL
NO SCALE

LENGTH FOR RADII
A = 1/2"
C = 1-1/2"

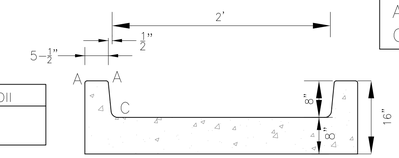

CONCRETE LOW FLOW CHANNEL DETAIL WITH 8" CURBHEAD
NO SCALE

LENGTH FOR RADII
A = 1/2"
C = 1-1/2"

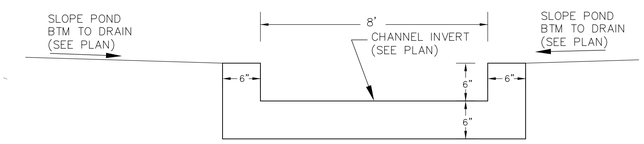

CONCRETE LOW FLOW CHANNEL
N.T.S.

POND C4
EMERGENCY OVERFLOW
AND CONCRETE CUTOFF WALL
BTM=5775.00, TOP=5778.00
WIDTH=30', 4:1 SIDE SLOPES
FLOW DEPTH=1.87', Q100=138CFS

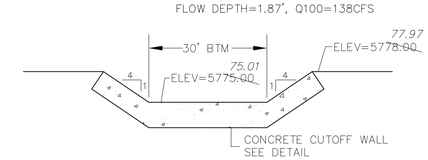

POND C4
EMERGENCY OVERFLOW
AND CONCRETE CUTOFF WALL
PROFILE
SCALE: NTS

AS-BUILT
DATE: 09/30/2022

SCALE: 1"=30'

CORE ENGINEERING GROUP
15004 1ST AVENUE S.
BURNSVILLE, MN 55306
PH: 719.570.1100
CONTACT: RICHARD L. SCHINDLER, P.E.
EMAIL: Rich@ceg1.com

NO.	DESCRIPTION	DATE
1.	RAISE SITE 1' EAST OF POWERLINES	JAN 12, 2021

PREPARED FOR:
LORSON, LLC
212 N. WAHSATCH AVE, SUITE 301
COLORADO SPRINGS, COLORADO 80903
(719) 635-3200
CONTACT: JEFF MARK

PROJECT:
THE HILLS COLLECTOR STREET CONSTRUCTION
FONTAINE BLVD. GRAYLING DR.
LORSON RANCH FILING NO. 10, PHASE 1
COLORADO SPRINGS, COLORADO

DRAWN: RLS
DESIGNED: RLS
CHECKED: RLS

POND C4 FOREBAY & LOW FLOW CHANNEL LAYOUT

COLORADO REGISTERED PROFESSIONAL ENGINEER
RICHARD L. SCHINDLER
33997
11-12-2020

DATE: NOV 12, 2020

PROJECT NO. 100.061

SHEET NUMBER C9.10

TOTAL SHEETS: 58

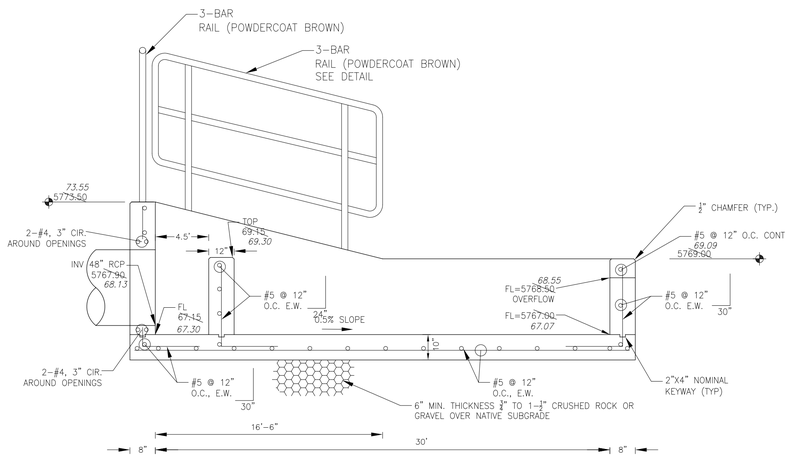

FOREBAY SECTION A–A
NO SCALE

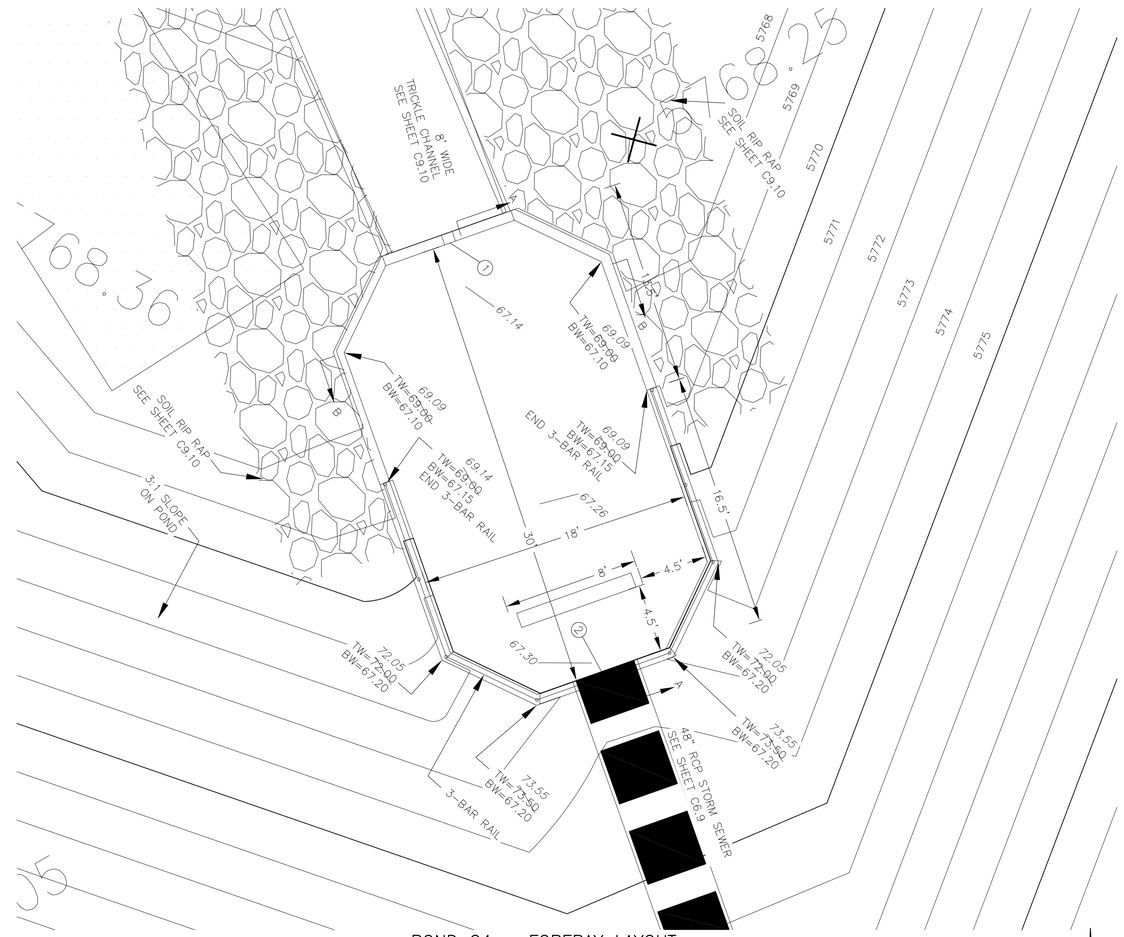

POND C4 – FOREBAY LAYOUT
SCALE: 1"=5'

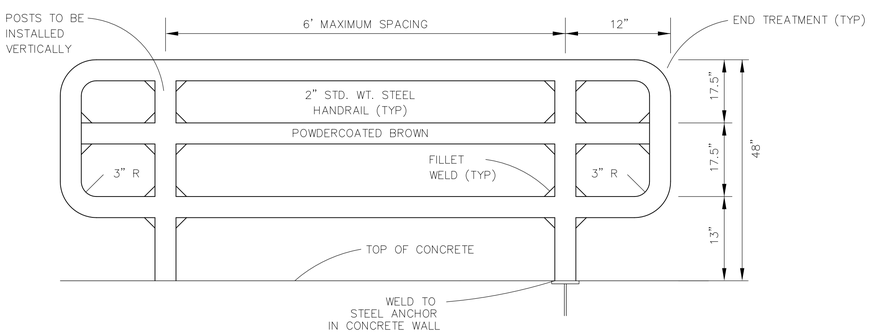

3–BAR RAIL DETAIL
NO SCALE

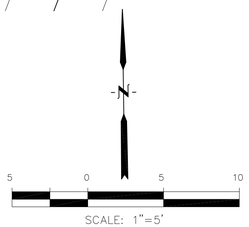

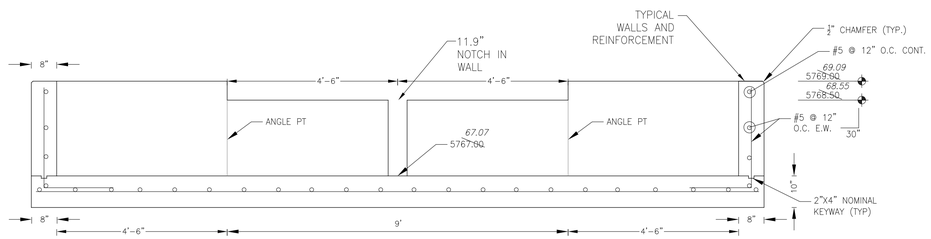

FOREBAY SECTION B–B
NO SCALE

NOTE: ALL CONCRETE
FOR FOREBAY SHALL BE
CDOT TYPE D

POINT TABLE (FOREBAY)				
NUMBER	NORTHING	EASTING	ELEVATION	NOTES
1	24309.51	29914.77	5767.00	FOREBAY BOTTOM
2	24281.30	29924.99	5767.15	FOREBAY BOTTOM, INV 48"=5767.90

AS-BUILT
DATE: 09/30/2022

CORE
ENGINEERING GROUP
15004 1ST AVENUE S.
BURNSVILLE, MN 55306
PH: 719.570.1100
CONTACT: RICHARD L. SCHINDLER, P.E.
EMAIL: Rich@ceg1.com

NO.	DESCRIPTION	DATE
1.	RAISE SITE 1' EAST OF POWERLINES	JAN 12, 2021

PREPARED FOR:
LORSON, LLC
212 N. WAHSATCH AVE, SUITE 301
COLORADO SPRINGS, COLORADO 80903
(719) 635-3200
CONTACT: JEFF MARK

PROJECT:
THE HILLS COLLECTOR
STREET CONSTRUCTION
FONTAINE BLVD - GRAYLING DR
LORSON BLVD - WHITE DOE LANE - TYLER DR
COLORADO SPRINGS, COLORADO

DRAWN: RLS
DESIGNED: RLS
CHECKED: RLS

POND C4

FOREBAY DETAILS

COLORADO REGISTERED PROFESSIONAL ENGINEER
RICHARD L. SCHINDLER
33997
11-12-2020

DATE:
NOV 12, 2020

PROJECT NO.
100.061

SHEET NUMBER
C9.11

TOTAL SHEETS: 58

NOTES
1. ALL SPOT ELEVATIONS ARE FLOW LINE UNLESS OTHERWISE NOTED.
2. SEE GRADING PLAN FOR GRADING INFORMATION.
3. ALL STORM SEWER SHALL BE CLASS III RCP.
4. ALL MHs SHALL BE TYPE 1 UNLESS OTHERWISE NOTED.

1 CURVE DATA ID

2 CURB TRANSITIONS

3 PEDESTRIAN RAMP, SEE SHEET C10.1

30 20 10 0 30 60

SCALE: 1"=30'

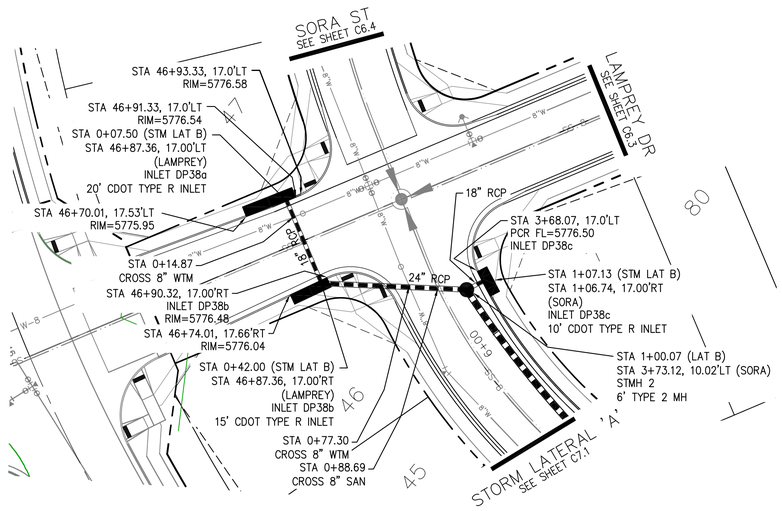

STORM LATERAL 'B' (PUBLIC)

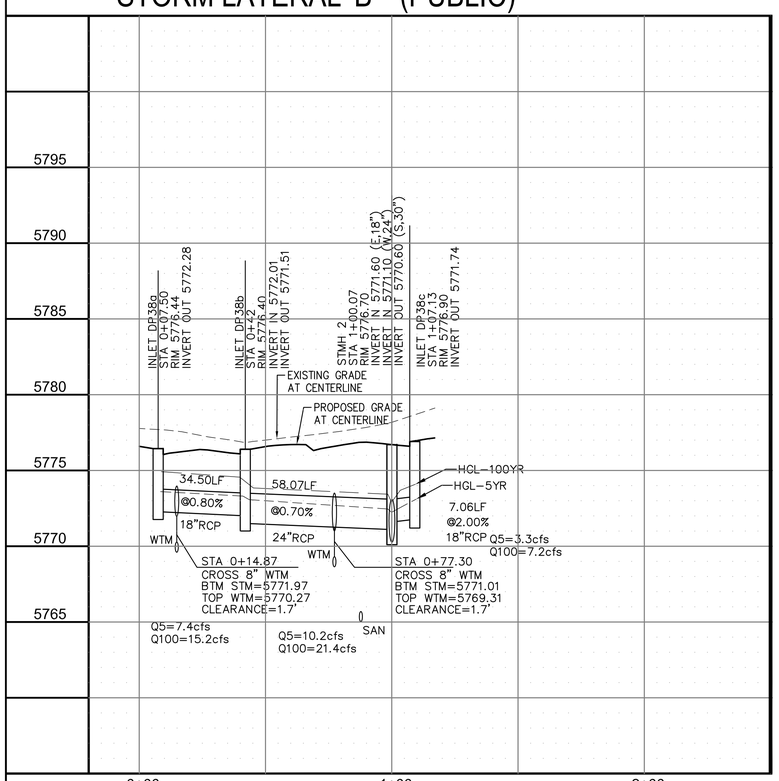

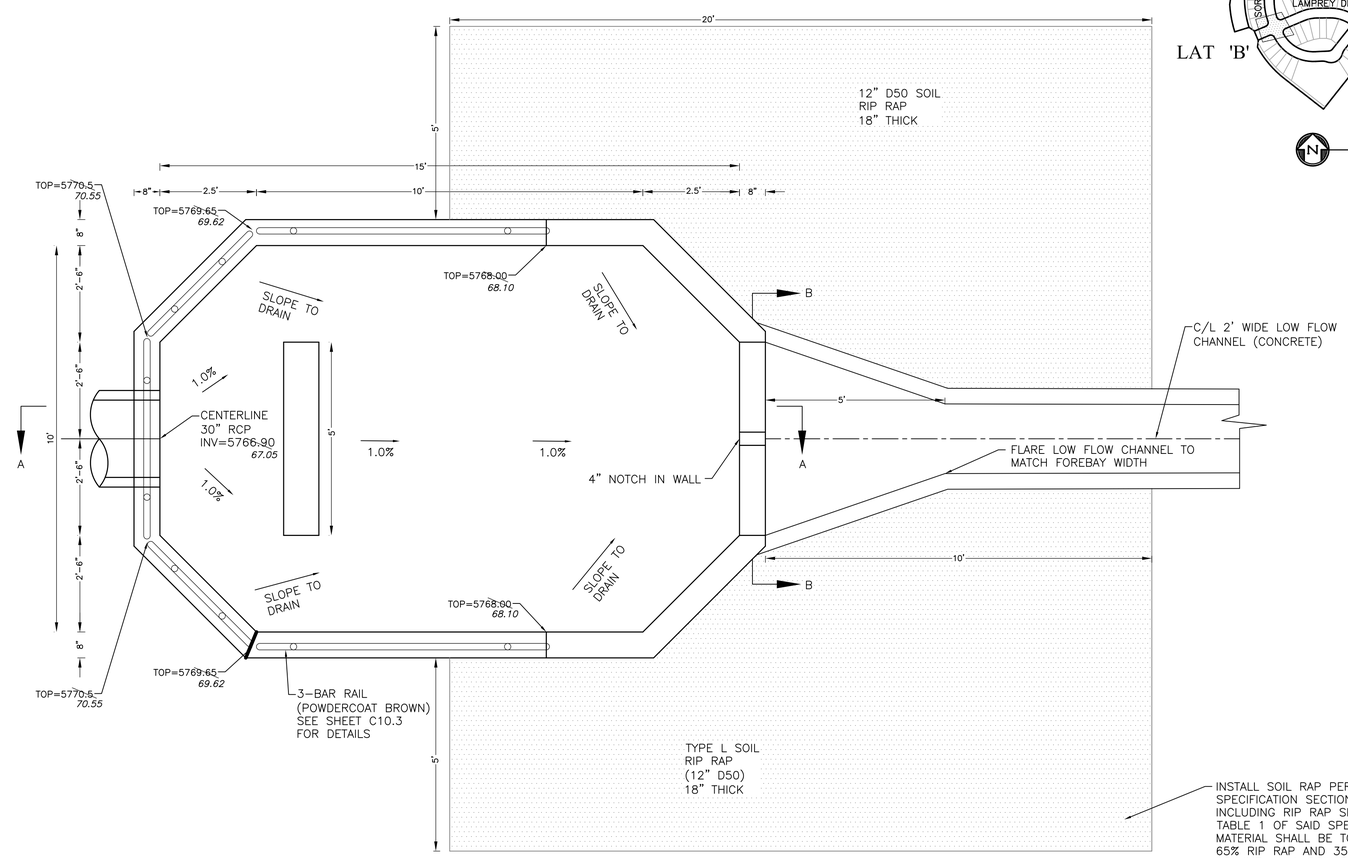

FOREBAY DETAIL
NO SCALE

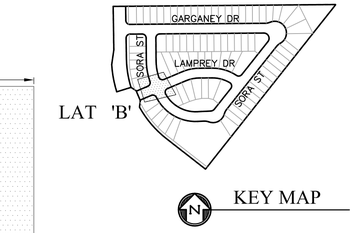

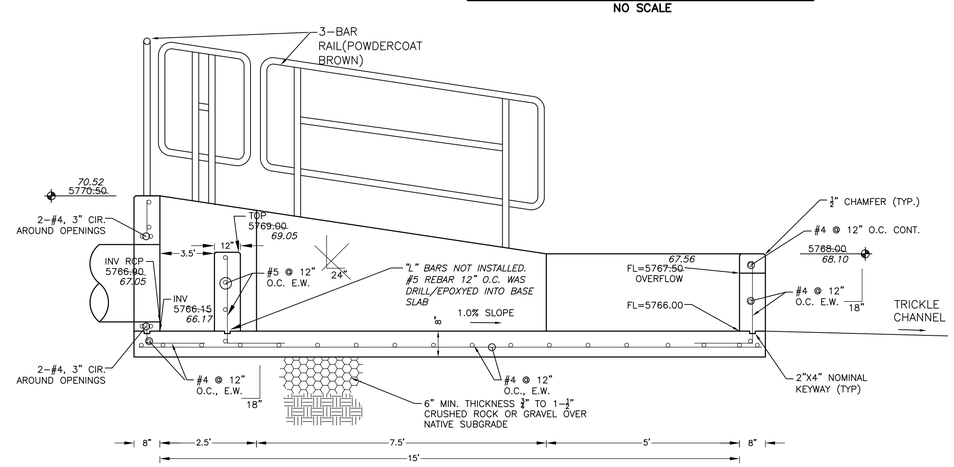

FOREBAY SECTION A-A
NO SCALE

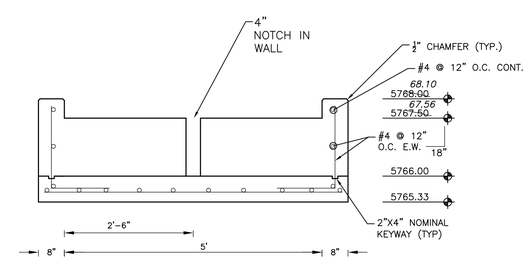

FOREBAY SECTION B-B
NO SCALE

AS-BUILT
DATE: 11/03/2022

CORE ENGINEERING GROUP
15004 1ST AVENUE S.
BURNSVILLE, MN 55306
PH: 719.570.1100
CONTACT: RICHARD L. SCHINDLER, P.E.
EMAIL: Rich@ceg1.com

NO.	DESCRIPTION	DATE

PREPARED FOR:
LORSON, LLC
212 N. WAHSATCH AVE, SUITE 301
COLORADO SPRINGS, COLORADO 80903
(719) 635-3200
CONTACT: JEFF MARK

PROJECT:
SKYLINE AT LORSON RANCH
GRAZING DR. & LAMPREY DR.
COLORADO SPRINGS, COLORADO

DRAWN: RLS
DESIGNED: RLS
CHECKED: RLS

STORM SEWER LATERAL
STORM LATERAL 'B'
AND SKYLINE POND C4 FOREBAY

COLORADO REGISTERED RICHARD L. SCHINDLER NUMBER 33997 PROFESSIONAL ENGINEER 5-2-2022

DATE: MAY 2, 2022

PROJECT NO. 100.063

SHEET NUMBER C7.2

TOTAL SHEETS: 17

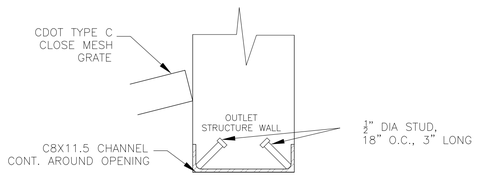

DETAIL A
NO SCALE

NOTE:
AFTER CONCRETE STRUCTURE HAS BEEN POURED ALL GRATE DIMENSIONS SHALL BE FIELD VERIFIED PRIOR TO GRATE CONSTRUCTION

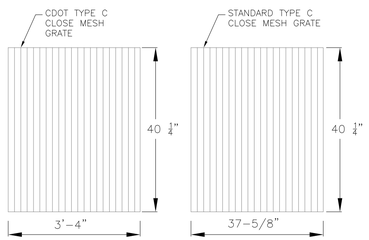

GRATE 1
NO SCALE

GRATES 2,3,4,5
NO SCALE

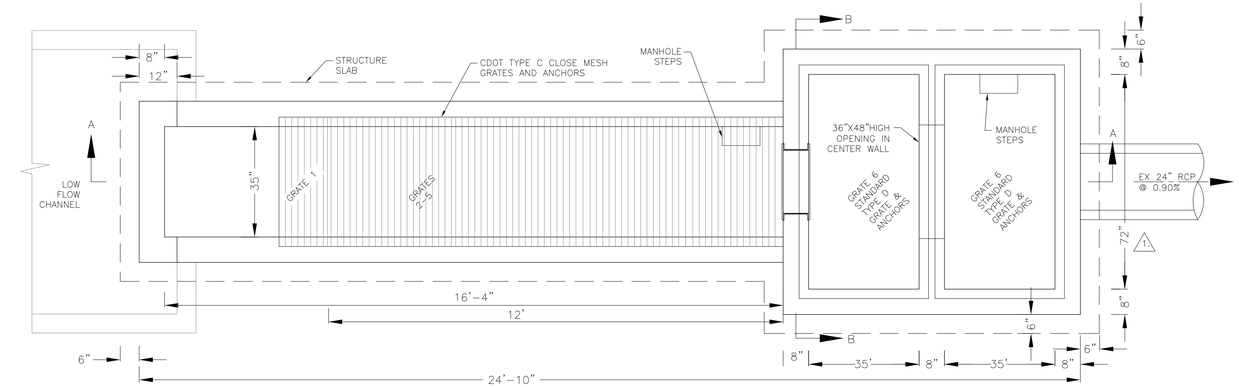

OUTLET STRUCTURE DETAIL – PLAN VIEW
NO SCALE

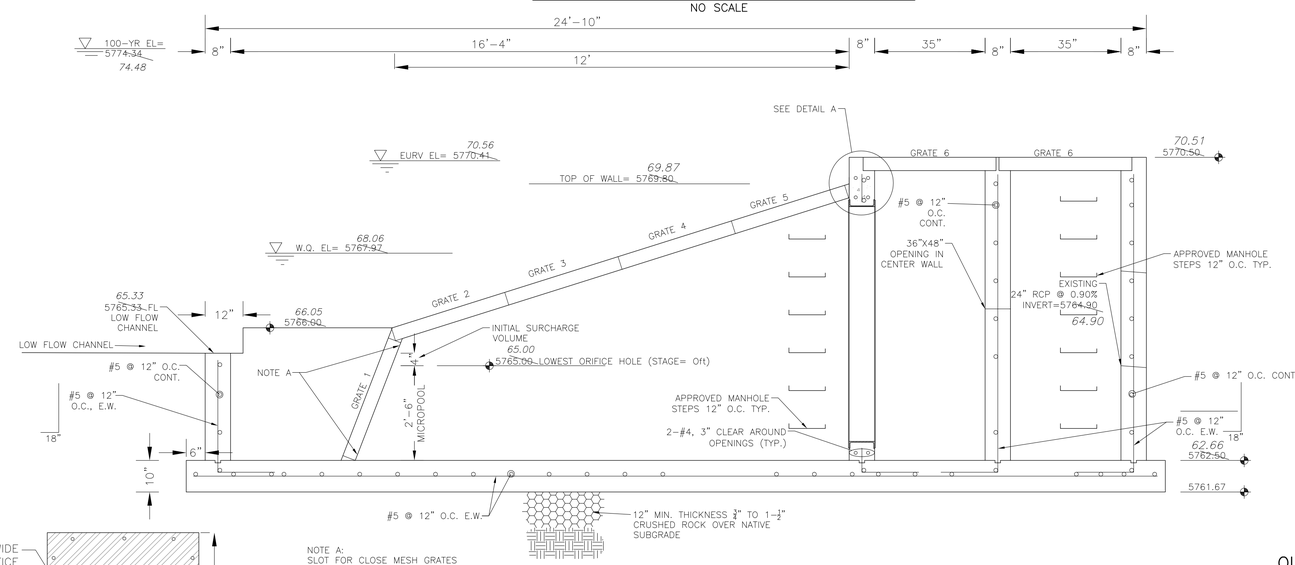

NOTE A:
SLOT FOR CLOSE MESH GRATES

OUTLET STRUCTURE DETAIL – SECTION A–A
NO SCALE

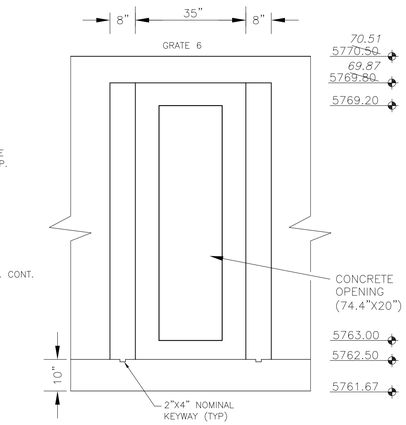

OUTLET STRUCTURE DETAIL – SECTION B–B
NO SCALE

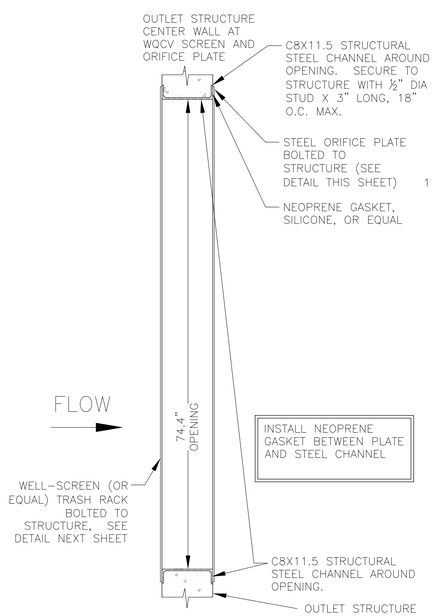

TRASH RACK DETAIL
NO SCALE

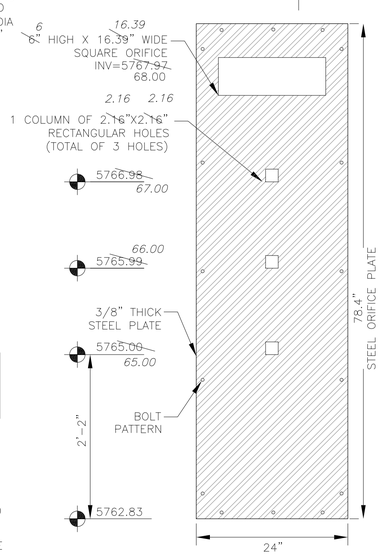

ORIFICE PLATE DETAIL
NO SCALE

OUTLET STRUCTURE, FOREBAY, AND DRAIN CHANNEL NOTES:

1. PRIOR TO CONSTRUCTION, CONTRACTOR SHALL PROVIDE SHOP DRAWINGS FOR ALL COMPONENTS OF THE OUTLET STRUCTURE.
2. GRADE 60 REINFORCING STEEL REQUIRED. SEE TABLE FOR THE MINIMUM LAP SPLICE LENGTH FOR REINFORCING BARS. ALL REINFORCING STEEL SHALL HAVE A TWO-INCH MINIMUM CLEARANCE FROM EDGE OF CONCRETE, UNLESS OTHERWISE NOTED.

BAR SIZE	#4	#5	#6
MIN. SPLICE LENGTH	1'-3"	1'-7"	2'-0"

3. CONCRETE FOR THE OUTLET STRUCTURE AND FOREBAY SHALL BE CDOT CLASS D CONCRETE.
4. CONCRETE FOR DRAIN CHANNELS SHALL BE CDOT CLASS B CONCRETE
5. EXPANSION JOINT MATERIAL SHALL MEET AASHTO SPECIFICATION M-213. EXPANSION JOINT MATERIAL SHALL BE ½" THICK, SHALL EXTEND THE FULL DEPTH OF CONTACT SURFACE AND THE JOINT SHALL BE SEALED, REFER TO DETAILS.
6. ALL EXPOSED CONCRETE CORNERS SHALL HAVE A ⅜" CHAMFER UNLESS OTHERWISE NOTED.
7. SUBGRADE TO BE 12" THICK CLEAN FILL COMPACTED TO 95% STANDARD PROCTOR DENSITY PER ASTM M698 UNDER STRUCTURE.
8. REFER TO POND DETAILS FOR PRESEDIMENTATION/FOREBAY DESIGN.
9. ENGINEER SHALL BE NOTIFIED PRIOR TO BEGINNING CONSTRUCITON OF OUTLET STRUCTURE TO SCHEDULE OBSERVATION VISITS FOR STRUCTURES.

WQCV WELL-SCREEN NOTES:

1. Well-Screen shall be stainless steel and attached by stainless steel bolts along edge of the mounting frame.

2. WQCV Well Screen
- Type of Screen: Stainless steel #93 Vee Wire (Johnson Vee Wire (tm) Stainless Steel Screen or equivalent with 60% open area)
- Screen slot opening dimension: 0.139" (Screen #93 Vee Wire Slot Opening)
- Type and Size of Support Rod: TE 0.074"X0.50"
- Spacing of Support Rod (O.C.): 1.0 Inch
- Total Screen Thickness: 0.655"
- Carbon Steel Holding Frame Type: 3/4" x 1.0" angle

AS-BUILT
DATE: 09/30/2022

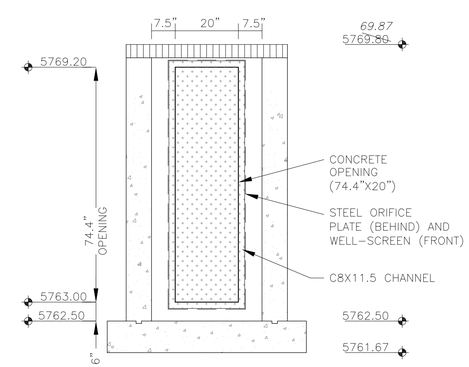

OUTLET STRUCTURE DETAIL – SECTION B–B
NO SCALE

CORE ENGINEERING GROUP
15004 1ST AVENUE S.
BURNSVILLE, MN 55306
PH: 719.570.1100
CONTACT: RICHARD L. SCHINDLER, P.E.
EMAIL: Rich@ceg1.com

NO.	DESCRIPTION	DATE
1.	STRUCTURE WIDTH REVISED TO 72"	3/10/2022

PREPARED FOR:
LORSON, LLC
212 N. WAHSATCH AVE, SUITE 301
COLORADO SPRINGS, COLORADO 80903
(719) 635-3200
CONTACT: JEFF MARK

PROJECT:
THE RIDGE AT LORSON RANCH
FONTAINE BLVD – WALLEYE DR
COLORADO SPRINGS, COLORADO

DRAWN: RLS
DESIGNED: RLS
CHECKED: RLS

POND C4
FULL SPECTRUM
OUTLET STRUCTURE DETAILS

COLORADO REGISTERED PROFESSIONAL ENGINEER
RICHARD L. SCHINDLER
NO. 33997
11/5/2021

DATE: NOV 5, 2021
PROJECT NO. 100.064
SHEET NUMBER C9.5
TOTAL SHEETS: 23