STORM WATER MANAGEMENT PLAN

FOR

LOT 2 BECKETT AT WOODMEN HILLS FILING NO. 3

SHOPS AT MCLAUGHLIN II

7368 MCLAUGHLIN ROAD
PEYTON, CO 80831

OCTOBER 2017
Revised July 2018

PREPARED FOR:

TBONE CONSTRUCTION
1310 FORD ST.
COLORADO SPRINGS, CO 80915

PREPARED BY:

TERRA NOVA ENGINEERING, INC.
721 S. 23RD STREET
COLORADO SPRINGS, CO 80904
(719) 635-6422

JOB NO. 1729.0

CONTACT INFORMATION

SWMP APPLICANT:
T-Bone Construction Inc
1310 Ford Street,
Colorado Springs, CO 80915
719.570.1456

CONTRACTOR:
T-Bone Construction Inc
1310 Ford Street,
Colorado Springs, CO 80915
(719) 570-1456

ENGINEER: Terra Nova Engineering, Inc.
Luanne Ducett P.E.
721 S. 23rd Street
Colorado Springs, CO 80904
719-635-6422 Office
719-635-6426 Fax
L@tnesinc.com

EROSION CONTROL SUPERVISOR/ SWMP ADMINISTRATOR:
T-Bone Construction Inc
1310 Ford Street,
Colorado Springs, CO 80904
(719) 570-1456

SWMP is to be maintained on site in the construction trailer whenever work is occurring. If construction trailer is not available, another alternative must be provided.

COLORADO DISCHARGE PERMIT SYSTEM (CDPS)

TO: Site Inspector Responsible For All CDPS Requirements

The following storm water pollution management plan (SWMP) is a detailed account of the requirements for the CDPS permit. The main objective of this plan is to prevent any contamination of the storm water while construction activity is taking place.

This document must be kept at the construction site at all times and be made available to the public and any representative of the Colorado Department of Health – Water Quality Control Division, if requested.

Enclosed are temporary erosion control details for the construction site and storm drain outfall points (Detail A). The operation and maintenance inspection record should be used as a guideline for the inspection of permanent and temporary control devices. Items to be inspected are not limited to those listed. The inspections should be made at regular intervals and before and after storm events. The inspection records must be signed and kept in this binder for no less than three (3) years.

STORM WATER MANAGEMENT PLAN FOR
LOT 2 BECKETT AT WOODMEN HILLS FILING NO. 3
SHOPS AT MCLAUGHLIN II
7368 MCLAUGHLIN ROAD

TABLE OF CONTENTS

APPENDIX

STORM WATER MANAGEMENT PLAN

FOR

LOT 2 BECKETT AT WOODMEN HILLS FILING NO. 3
SHOPS AT MCLAUGHLIN II
7368 MCLAUGHLIN ROAD

SITE DESCRIPTION & EXISTING CONDITIONS

The site is owned by Shops at McLaughlin II LLC and is approximately 0.86 acres. The area of disturbance is 0.86 acres with the construction of storm channels, site grading for parking, utilities, and building. The site is located in the Sections 7, Township 13 South, Range 64 West of the 6th Principal Meridian currently within El Paso County, Colorado also known as LOT 2 BECKETT AT WOODMEN HILLS FILING NO. 3 or SHOPS AT MCLAUGHLIN 7368 MCLAUGHLIN, Peyton, CO. The site is bounded on the south by vacant land, to the north and west by a shopping center, and to the east by a Meineke Car Care Center and Falcon Pawn.

The site currently consists of undeveloped land that was previously overlot graded. The site is covered with mostly native grasses (~25% of site) and bare earth (~75% of site). The bare earth appears to be the results of vehicle parking on the site. This site flows to the east and south into McLaughlin Road and an existing sump inlet. From here flows continue to the existing detention pond No. 5 located southwest of the site and sized for this area. The existing site runoff coefficients are $C_5 = 0.09$, $C_{100} = 0.36$ and the proposed site runoff coefficients are $C_5 = 0.81$, $C_{100} = 0.88$.

As determined by Flood Insurance Rate Map No. 08041C0575 F dated March 17, 1997 (see appendix), All of this site is within a designated F.E.M.A. floodplain known as Zone X or areas determined to be outside of the 500-year floodplain).

The site is contained in the Black Squirrel Creek Basin. Onsite flows will be captured in proposed drainage channels and gutters and conveyed to the existing area inlet in Mclaughlin Road at the southeast corner of the site.

Soils for this project are delineated by the map in the appendix as 100% columbine (19) having a hydrologic group of 'B' per the USDA, NRCS web soil survey. The existing slopes range from 1% to 6% across the site.

Construction on this site will be limited to the site itself. Traffic, pedestrian and sediment controls will be implemented along the perimeter of the site.

The developed site north of this site is sloped such that it primarily drains to the southeast. The site east of this site drains west and is developed. Mclaughlin is along the western and southern boundary and will be protected from site construction activity by BMP's kept in place until the site is stabilized. Earth moving activities are not proposed beyond the property line. There is no offsite grading proposed for this project in any direction, therefore, sites adjacent to this site should not be adversely affected during construction.

Source Control BMP details are included on the Grading & Erosion Control drawings that are a part of the appendix of this document. They include details for rock socks and inlet protection, vehicle tracking control, a concrete washout, materials staging & dirt stockpile areas. The dirt stockpile (SP) area is contained with silt fence per the included details.

Erosion Control BMP details are also a part of the Grading & Erosion Control drawings which are included in the appendix of this document. Erosion Control measures include crimping and seeding of disturbed areas as prescribed by the general notes on the grading plan document.

Materials Management BMP information is included on the Grading & Erosion Control Plan drawings located in the appendix of this document. These include details for the materials staging and dirt stockpile areas.

Sediment Control BMP included on the Grading & Erosion Control Plan drawings located in the appendix of this document. These include details for rock sock sediment barriers and inlet protection.

Site Management includes inspection of all BMP's on a regular basis and/or as prescribed in the details. Inspections includes maintenance and repairs as necessary to maintain the BMP's in an effective working condition.

CONSTRUCTION ACTIVITY AND STORAGE

No known toxic materials have been treated, stored, disposed, spilled or leaked onto the construction site. Practices to minimize contact of construction materials, equipment and vehicles with the storm water include installation of silt fence, installation of vehicle tracking control, sub-contractor cleaning and hauling of excess debris and material upon completion of work and protection of culverts and inlets with sand bags and straw logs to retain silts. Construction material loading and unloading, and access to such areas occur from staging areas shown on the map. See Erosion Control Plan for Vehicle Tracking access point during construction. The concrete washout area will be removed and disposed of as required by this permit as well as the SWMP permit.

There will be no on-site mobile fueling. Contractor shall have the Hazardous Material emergency response number posted on the construction trailer on site. No concrete or asphalt batch plants are planned for the construction site. The site will be considered stabilized when all grading has been completed and site vegetation is at 70% established, grading, and building construction have been completed. There will be 0.86 acres of disturbed soil with approximately 250 cubic yards of cut and 0 cubic yards of fill for a net export of 250 cubic yards.

TIMING SCHEDULE, BEST MANAGEMENT PRACTICES AND OTHER CONTROLS

Erosion control measures shall be implemented in a manner that will protect properties and public facilities from the adverse effects of erosion and sedimentation as a result of construction and earthwork activities.

Grading will begin in Summer of 2018 or as soon as the Site Development Plan has been approved and the overall area graded and the site shall be considered stabilized in the Fall 2019.

Before clearing and grubbing may begin the first level of BMPs are to be installed (Phase One). These measures include rock socks (RS) protection along the base of existing fence lines, vehicle tracking control

(VTC) at all construction exit points onto paved surfaces, materials staging area (SSA), materials stockpile area (SP) with a silt fence perimeter and a concrete washout area (CW). All BMPs are to be as indicated on the included Grading & Erosion Control Plan unless the contractor changes the plan per procedure noted in the inspection & repair section of this permit. The Phase One activity should be completed approximately 2 months later or August 1, 2018 more or less.

Phase Two beginning on August 1, 2018 more or less shall have BMPs installed per plan once the site is graded in. The measures installed with this phase of construction include all BMPs from Phase One as well as inlet protection (IP). During the installation of the drainage channels, the contractor shall also adhere to this Storm Water Management Plan. Additional BMPs may be included at the discretion of the site contractor where he/she deems it necessary to minimize sedimentation transference. The anticipated completion date of this phase will be September 1, 2018 more or less.

Phase Three BMPs that shall be installed once the storm drain system is completed include the continued use of inlet protection (IP) and rock sock protection (RS). Permanent curb & gutter, pavement and seeding in the balance of exposed surface areas will occur with this phase of construction. This phase begins on September 1, 2018 and continues through June 1, 2019 more or less.

Phase Four BMPs to be installed once the construction is completed will be permanent. This level includes removal of any remaining BMPs that are not a permanent installation. Treating the soil and seeding per the requirements of the landscape plan and mulching any disturbed areas as well as stockpiles that remain after final grading is completed is required. Any area that is anticipated to remain in an interim condition (bare dirt) for more than 60 days shall be seeded and maintained in a fashion that promotes growth and establishment of vegetation per the landscape plan. All temporary soil erosion control measures and BMPs shall be maintained until permanent soil erosion control measures are implemented and vegetation has been established to 70% on areas not to be covered with gravel. These temporary BMPs are to be removed once the 70% vegetation has been established. At this point in the construction process, all landscaping should be in place and maintained for a period of time that allows for its establishment on the site. Once 70% of the site has been revegetated, final stabilization of the site is complete and this permit shall be closed. This phase begins on June 1, 2019 more or less and is anticipated to be stabilized by the end of October 2019.

SEEDING REQUIREMENTS

Seeding includes seeding areas along the fence lines as designated on the plans with a slope of 4:1 or steeper. Seeding must be accepted in the field by the Engineer as complying with the plans and specification. To

verify installation of appropriate seed quantities, Contractor will provide delivery slips for seed as provided by the seed supplier.

Wood stakes are required. No metal stakes will be allowed.

Native Seeding with Temporary Blanket shall be in accordance with the manufacturer's requirements for North American Green SC150BN or approved equal. Blanket shall be installed per manufacturers recommendations and per the plan.

The grass seed mix recommended for this project is a Low Maintenance Seed Mixture available from Arkansas Valley Seed (4300 Monaco Street, Denver, CO 80216, (303) 320-7500 or (877) 907-3337, www.avseeds.com) which includes the following:

35% Chewings Fescue
30% Creeping Red Fescue
25% Hard Fescue
10% Blue Fescue

1. Unless otherwise indicated, the minimum thickness of topsoil in seeded areas shall be 4". Topsoil shall meet the requirements of the City of Colorado Springs Drainage Criteria Manual, Volume 1, Chapter 14.

2. Seed shall be planted by Drill seeding in all accessible areas by means of a Brillion mechanical power-drawn drill seeders, or equal, to a maximum depth of ¼ inch followed by packer wheels or drag chains to provide smooth finish. Seed at the rated given below. Provide markers or other means to assure that the successive seeded strips will overlap or be separated by a space no greater than the space between the rows planted by equipment being used. Do not seed during windy weather.

In areas inaccessible to a drill seeder, broadcast seed by hand in two opposite directions. Rake in seed after broadcasting. Do not broadcast seed during windy weather.

3. Seeding Rates: This seed should be applies at a rate of 4-6 lbs per 1,000 sq ft and over-seeded @ 2-3 lbs per 1,000 sq ft.

4. Do not seed areas in excess of that which can be mulched the same day.

5. Do not sow immediately following rain, when ground is too dry, frozen or during windy periods.

6. Roll seeded area with roller not exceeding 100 pounds.

7. Apply mulch immediately following seeding and compaction.

NON STORM WATER MANAGEMENT

Non-storm water discharges pertaining to landscape irrigation are anticipated on the site, however no spring discharges are expected.

WASTE MANAGEMENT AND DISPOSAL

All waste and debris created by construction activities at the site shall be disposed of in compliance with all laws, regulations, and ordinances of the federal, state and local agencies.

MAINTENANCE, INSPECTION AND REPAIR

The owner or his representative shall inspect and monitor all drainage facilities using the enclosed "Monitoring and Maintenance Inspection Record" checklist in the appendix. In order to ensure that all graded surfaces, structures, vegetation, erosion and sediment control measures and other protective devices identified in the erosion control plan are maintained in good and effective condition, an Operation and Maintenance Inspection Monitoring Program will be implemented by the permit holder during the construction phase. A systematic inspection of all the above mentioned protective devices will be performed by trained personnel using the operation and maintenance inspection record form in the appendix every 14 days. Additional inspections may be required prior to anticipated precipitation events and after precipitation events. All monitoring records are to be kept with the SWMP for a period of no less than three (3) years.

This site will be considered stabilized when all construction activities have been completed and vegetation has been established as previously noted. Erosion control measures including silt fence and inlet protection must be removed after final stabilization.

Any major revisions or modification to this Storm Water Management Plan will require a report addendum and erosion control map revision. Minor revisions may be signed off by the City Storm Water Field Inspector.

PROCEDURE FOR REVISIONS TO THE SWMP

The contractor shall keep a copy of the SWMP, Erosion Control Plan and Permit on the site at all times during construction. At the contractor's discretion, changes may be made to the Erosion Control Plan by noting it on the approved copy kept on site. It is recommended that the contractor consider using a legend using colors that correspond to the changes based on the date of the change or any other method that is appropriate for the purpose of maintaining an up-to-date and accurate plan set on site while construction is under way.

PREPARED BY:

Terra Nova Engineering, Inc.

L Ducett, P.E.
President

Jobs/1729.00/word/SWMP-RPT.doc

APPENDIX

GENERAL LOCATION MAP

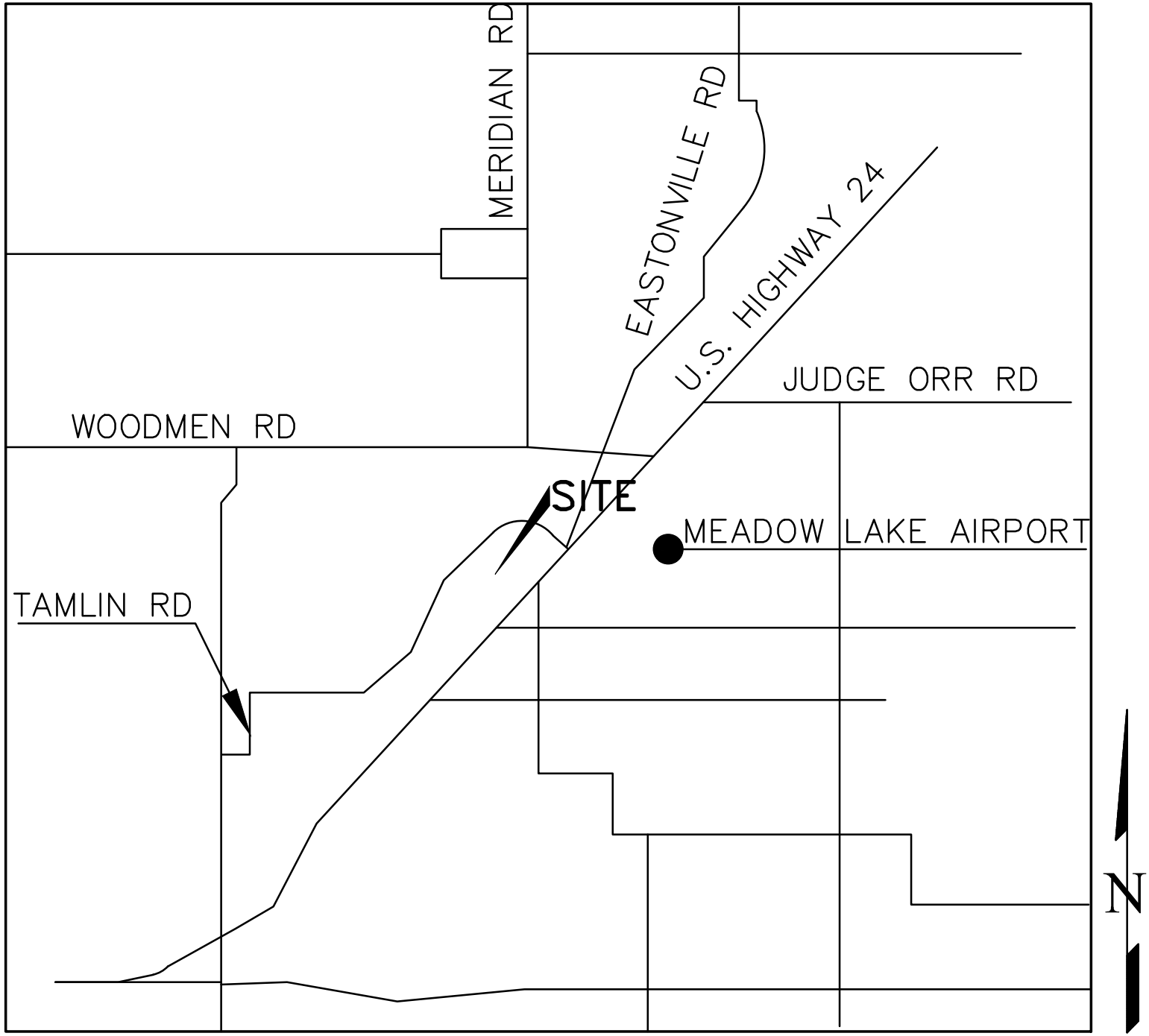

VICINITY MAP

N.T.S.

CONSTRUCTION SCHEDULE AND SEQUENCE

Erosion control measures shall be implemented in a manner that will protect properties and public facilities from the adverse effects of erosion and sedimentation as a result of construction and earthwork activities.

Grading will begin in Summer of 2018 and the overall area graded and the site will be considered stabilized in the Fall 2019.

Before clearing and grubbing may begin the first level of BMPs are to be installed. These measures include erosion control logs (EL), vehicle tracking control (VTC) at all construction exit points onto paved roads, materials staging area (SSA), materials stockpile area (SP) and a concrete washout area (CW).

The Second level of BMPs to be installed once the site is graded in, include erosion control logs (EL) from the previous phase, rock sock protection (RS), and inlet protection (IP). During the installation of the drainage channels, the contractor shall also adhere to this Stormwater management plan. Installation of erosion control measures that are better suited to the work being performed may need to be considered.

Third level of BMPs to be installed once the storm drain system is installed include the continued use of inlet protection (IP), rock sock protection (RS) and erosion control logs (EL). Permanent curb & gutter, pavement and seeding in the balance of exposed surface areas will occur with this phase of construction.

Fourth level of BMPs to be installed once the previous BMPs and construction is completed. This level includes any disturbed areas and stockpiles which are not at final grade, but will remain dormant for longer than 30 days are to be mulched within 21 days after interim grading. An area that is going to remain in an interim state for more than 60 days shall also be seeded. All temporary soil erosion control measures and BMPs shall be maintained until permanent soil erosion control measures are implemented and vegetation has been established to 70% on areas not to be covered with gravel. These temporary BMPs are to be removed once the 70% vegetation has been established. At this point in the construction process, all landscaping should be in place and maintained for a period of time that allows for its establishment on the site.

GENERAL PERMIT APPLICATION

OPERATION AND MAINTENANCE INSPECTION RECORD

The following inspection records are to be used at each bi-monthly stormwater management system inspection and after any precipitation or snowmelt event that causes surface runoff. As a result of these inspections, the SWMP may need to be revised. The inspection records and revised SWMP shall be made available to the division upon request. If the construction activity lasts more than 12 months, a copy of the inspection records and revised SWMP shall be sent to the division by May 1 of each year covering April 1 to March 31.

EROSION CONTROL PLAN

LOT 2 BECKETT AT WOODMEN HILLS FIL. NO. 3

GRADING & EROSION CONTROL PLAN

EL PASO COUNTY, COLORADO

SHOPPS AT MCLAUGHLIN II

GRADING NOTES

1. CONSTRUCTION MAY NOT COMMENCE UNTIL A CONSTRUCTION PERMIT IS OBTAINED FROM DEVELOPMENT SERVICES AND A PRE-CONSTRUCTION CONFERENCE IS HELD WITH DEVELOPMENT SERVICES INSPECTIONS.

2. STORMWATER DISCHARGES FROM CONSTRUCTION SITES SHALL NOT CAUSE OR THREATEN TO CAUSE POLLUTION, CONTAMINATION, OR DEGRADATION OF STATE WATERS. ALL WORK AND EARTH DISTURBANCE SHALL BE DONE IN A MANNER THAT MINIMIZES POLLUTION OF ANY ON-SITE OR OFF-SITE WATERS, INCLUDING WETLANDS.

3. NOTWITHSTANDING ANYTHING DEPICTED IN THESE PLANS IN WORDS OR GRAPHIC REPRESENTATION, ALL DESIGN AND CONSTRUCTION RELATED TO DRAINAGE AND EROSION CONTROL SHALL CONFORM TO THE STANDARDS AND REQUIREMENTS OF THE MOST RECENT VERSION OF THE RELEVANT ADOPTED EL PASO COUNTY STANDARDS, INCLUDING THE LAND DEVELOPMENT CODE, THE ENGINEERING CRITERIA MANUAL, THE DRAINAGE CRITERIA MANUAL, AND THE DRAINAGE CRITERIA MANUAL VOLUME 2. ANY DEVIATIONS TO REGULATIONS AND STANDARDS MUST BE REQUESTED, AND APPROVED, IN WRITING.

4. A SEPARATE STORMWATER MANAGEMENT PLAN (SWMP) FOR THIS PROJECT SHALL BE COMPLETED AND AN EROSION AND STORMWATER QUALITY CONTROL PERMIT (ESQCP) ISSUED PRIOR TO COMMENCING CONSTRUCTION. DURING CONSTRUCTION THE SWMP IS THE RESPONSIBILITY OF THE DESIGNATED STORMWATER MANAGER, SHALL BE LOCATED ON SITE AT ALL TIMES AND SHALL BE KEPT UP TO DATE WITH WORK PROGRESS AND CHANGES IN THE FIELD.

5. ONCE THE ESQCP HAS BEEN ISSUED, THE CONTRACTOR MAY INSTALL THE INITIAL STAGE EROSION AND SEDIMENT CONTROL BMP'S AS INDICATED ON THE GRADING & EROSION CONTROL PLAN. A PRECONSTRUCTION MEETING BETWEEN THE CONTRACTOR, ENGINEER, AND EL PASO COUNTY WILL BE HELD PRIOR TO ANY CONSTRUCTION. IT IS THE RESPONSIBILITY OF THE APPLICANT TO COORDINATE THE MEETING TIME AND PLACE WITH COUNTY DSD INSPECTIONS STAFF.

6. SOIL EROSION CONTROL MEASURES FOR ALL SLOPES, CHANNELS, DITCHES, OR ANY DISTURBED LAND AREA SHALL BE COMPLETED WITHIN 21 CALENDAR DAYS AFTER FINAL GRADING, OR FINAL EARTH DISTURBANCE, HAS BEEN COMPLETED. DISTURBED AREAS AND STOCKPILES WHICH ARE NOT AT FINAL GRADE BUT WILL REMAIN DORMANT FOR LONGER THAN 30 DAYS SHALL ALSO BE MULCHED WITHIN 21 DAYS AFTER INTERIM GRADING. AN AREA THAT IS GOING TO REMAIN IN INTERIM STATE FOR MORE THAN 60 DAYS SHALL ALSO BE SEEDED. ALL TEMPORARY SOIL EROSION CONTROL MEASURES AND BMP'S SHALL BE MAINTAINED UNTIL PERMANENT SOIL EROSION CONTROL MEASURES ARE IMPLEMENTED AND ESTABLISHED.

7. TEMPORARY SOIL EROSION CONTROL FACILITIES SHALL BE REMOVED AND EARTH DISTURBANCE AREAS GRADED AND STABILIZED WITH PERMANENT SOIL EROSION CONTROL MEASURES PURSUANT TO STANDARDS AND SPECIFICATION PRESCRIBED IN THE DRAINAGE CRITERIA MANUAL (DCM) VOLUME 2 AND THE ENGINEERING CRITERIA MANUAL (ECM) APPENDIX I.

8. ALL PERSONS ENGAGED IN EARTH DISTURBANCE SHALL IMPLEMENT AND MAINTAIN ACCEPTABLE SOIL EROSION AND SEDIMENT CONTROL MEASURES INCLUDING BMP'S IN CONFORMANCE WITH THE EROSION CONTROL TECHNICAL STANDARDS OF THE DCM VOLUME 2 AND IN ACCORDANCE WITH THE STORMWATER MANAGEMENT PLAN (SWMP).

9. ALL TEMPORARY EROSION CONTROL FACILITIES INCLUDING BMP'S AND ALL PERMANENT FACILITIES INTENDED TO CONTROL EROSION OF ANY EARTH DISTURBANCE OPERATIONS, SHALL BE INSTALLED AS DEFINED IN THE APPROVED PLANS, THE SWMP AND THE DCM VOLUME 2 AND MAINTAINED THROUGHOUT THE DURATION OF THE EARTH DISTURBANCE OPERATION.

10. ANY EARTH DISTURBANCE SHALL BE CONDUCTED IN SUCH A MANNER SO AS TO EFFECTIVELY REDUCE ACCELERATED SOIL EROSION AND RESULTING SEDIMENTATION. ALL DISTURBANCES SHALL BE DESIGNED, CONSTRUCTED, AND COMPLETED SO THAT THE EXPOSED AREA OF ANY DISTURBED LAND SHALL BE LIMITED TO THE SHORTEST PRACTICAL PERIOD OF TIME.

11. ANY TEMPORARY OR PERMANENT FACILITY DESIGNED AND CONSTRUCTED FOR THE CONVEYANCE OF STORMWATER AROUND, THROUGH, OR FROM THE EARTH DISTURBANCE AREA SHALL BE DESIGNED TO LIMIT THE DISCHARGE TO A NON-EROSIVE VELOCITY.

12. CONCRETE WASH WATER SHALL BE CONTAINED AND DISPOSED OF IN ACCORDANCE WITH THE SWMP. NO WASH WATER SHALL BE DISCHARGED TO OR ALLOWED TO RUNOFF TO STATE WATERS, INCLUDING ANY SURFACE OR SUBSURFACE STORM DRAINAGE SYSTEM OR FACILITIES.

13. EROSION CONTROL BLANKETING IS TO BE USED ON THE RE-GRADED DITCH.

14. VEHICLE TRACKING OF SOILS AND CONSTRUCTION DEBRIS OFF-SITE SHALL BE MINIMIZED. MATERIALS TRACKED OFFSITE SHALL BE CLEANED UP AND PROPERLY DISPOSED OF IMMEDIATELY.

15. CONTRACTOR SHALL BE RESPONSIBLE FOR THE REMOVAL OF ALL WASTES FROM THE CONSTRUCTION SITE FOR DISPOSAL IN ACCORDANCE WITH LOCAL AND STATE REGULATORY REQUIREMENTS. NO CONSTRUCTION DEBRIS, TREE SLASH, BUILDING MATERIAL WASTES OR UNUSED BUILDING MATERIALS SHALL BE BURIED, DUMPED, OR DISCHARGED AT THE SITE.

16. THE OWNER, SITE DEVELOPER, CONTRACTOR, AND/OR THEIR AUTHORIZED AGENTS SHALL BE RESPONSIBLE FOR THE REMOVAL OF ALL CONSTRUCTION DEBRIS, DIRT, TRASH, ROCK, SEDIMENT, AND SAND THAT MAY ACCUMULATE IN THE STORM SEWER OR OTHER DRAINAGE CONVEYANCE SYSTEM AND STORMWATER APPURTENANCES AS A RESULT OF SITE DEVELOPMENT.

17. THE QUANTITY OF MATERIALS STORED ON THE PROJECT SITE SHALL BE LIMITED, AS MUCH AS PRACTICAL, TO THAT QUANTITY REQUIRED TO PERFORM THE WORK IN AN ORDERLY SEQUENCE. ALL MATERIALS STORED ON-SITE SHALL BE STORED IN A NEAT, ORDERLY MANNER, IN THEIR ORIGINAL CONTAINERS, WITH ORIGINAL MANUFACTURERS LABELS.

18. NO CHEMICALS ARE TO BE USED BY THE CONTRACTOR, WHICH HAVE THE POTENTIAL TO BE RELEASED IN STORMWATER UNLESS PERMISSION FOR THE USE OF A SPECIFIC CHEMICAL IS GRANTED IN WRITING BY THE ECM ADMINISTRATOR. IN GRANTING THE USE OF SUCH CHEMICALS, SPECIAL CONDITIONS AND MONITORING MAY BE REQUIRED.

19. BULK STORAGE STRUCTURES FOR PETROLEUM PRODUGTS AND OTHER CHEMICALS SHALL HAVE ADEQUATE PROTECTION SO AS TO CONTAIN ALL SPILLS AND PREVENT ANY SPILLED MATERIAL FROM ENTERING STATE WATERS, INCLUDING ANY SURFACE OR SUBSURFACE STORM DRAINAGE SYSTEM OR FACILITIES.

20. NO PERSON SHALL CAUSE THE IMPEDIMENT OF STORMWATER FLOW IN THE FLOWLINE OF THE CURB & GUTTER OR IN THE DITCHLINE.

21. INDIVIDUALS SHALL COMPLY WITH THE "COLORADO WATER QUALITY CONTROL ACT" (TITLE 25, ARTICLE 8, CRS), AND THE "CLEAN WATER ACT" (33 USC 1344). IN ADDITION TO THE REQUIREMENTS INCLUDED IN THE DCM VOLUME 2 AND THE CM APPENDIX I. ALL APPROPRIATE PERMITS MUST BE OBTAINED BY THE CONTRACTOR PRIOR TO CONSTRUCTION (NPDES, FLOODPLAIN, 404, FUGITIVE DUST, ETC.). IN THE EVENT OF CONFLICTS BETWEEN THESE REQUIREMENTS AND LAWS, RULES OR REGULATIONS OF OTHER FEDERAL, STATE, OR COUNTY AGENCIES, THE MORE RESTRICTIVE LAWS, RULES, OR REGULATIONS SHALL APPLY.

22. ALL CONSTRUCTION TRAFFIC MUST ENTER/EXIT THE SITE AT APPROVED CONSTRUCTION ACCESS POINTS.

23. PRIOR TO ACTUAL CONSTRUCTION THE PERMITEE SHALL VERIFY THE LOCATION OF EXISTING UTILITIES.

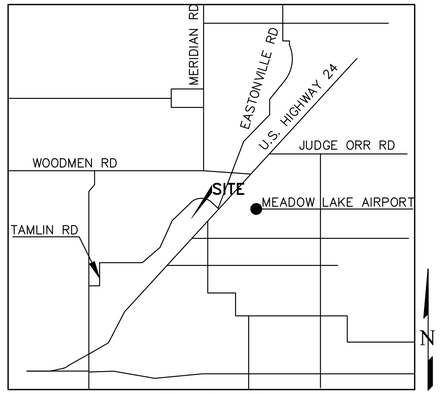

VICINITY MAP
N.T.S.

GRADING NOTES CONTINUED

24. A WATER SOURCE SHALL BE AVAILABLE ON SITE DURING EARTHWORK OPERATIONS AND UTILIZED AS REQUIRED TO MINIMIZE DUST FROM EARTHWORK EQUIPMENT AND WIND.

25. AT LEAST TEN DAYS PRIOR TO THE ANTICIPATED START OF CONSTRUCTION, FOR PROJECTS THAT WILL DISTURB 1 ACRE OR MORE, THE OWNER OR OPERATOR OF CONSTRUCTION ACTIVITY SHALL SUBMIT A PERMIT APPLICATION FOR STORMWATER DISCHARGE TO THE COLORADO DEPARTMENT OF PUBLIC HEALTH AND ENVIRONMENT, WATER QUALITY DIVISION. THE APPLICATION CONTAINS CERTIFICATION OF COMPLETION OF A STORMWATER MANAGEMENT PLAN (SWMP), OF WHICH THIS GRADING AND EROSION CONTROL PLAN MAY BE A PART. FOR INFORMATION OR APPLICATION MATERIALS CONTACT:
COLORADO DEPARTMENT OF PUBLIC HEALTH AND ENVIRONMENT
WATER QUALITY CONTROL DIVISION
WQCD - PERMITS
4300 CHERRY CREEK DRIVE SOUTH
DENVER, CO 80246-1530
ATTENTION: PERMITS UNIT

26. ALL PERSONS ENGAGED IN EARTH DISTURBANCE SHALL IMPLEMENT AND MAINTAIN ACCEPTABLE SOIL EROSION AND SEDIMENT CONTROL MEASURES INCLUDING BMP'S IN CONFORMANCE WITH THE EROSION CONTROL TECHNICAL STANDARDS OF THE MANUAL AND IN ACCORDANCE WITH THE EROSION AND STORMWATER QUALITY CONTROL PLAN APPROVED BY THE EL PASO COUNTY, IF REQUIRED.

27. SPILL PREVENTION AND CONTAINMENT MEASURES SHALL BE USED AT STORAGE, AND EQUIPMENT FUELING AND SERVICING AREAS TO PREVENT THE POLLUTION OF ANY STATE WATERS, INCLUDING WETLANDS. ALL SPILLS SHALL BE CLEANED UP IMMEDIATELY AFTER DISCOVERY, OR CONTAINED UNTIL APPROPRIATE CLEANUP METHODS CAN BE EMPLOYED. MANUFACTURER'S RECOMMENDED METHODS FOR SPILL CLEANUP SHALL BE FOLLOWED, ALONG WITH PROPER DISPOSAL METHODS.

28. A COPY OF THE ACCEPTED EROSION CONTROL PERMIT, SIGNED PLANS AND SIGNED MANUAL SHALL BE ON-SITE @ ALL TIMES DURING CONSTRUCTION.

EL PASO COUNTY STANDARD NOTES

1. ALL DRAINAGE AND ROADWAY CONSTRUCTION SHALL MEET THE STANDARDS AND SPECIFICATIONS OF THE CITY OF COLORADO SPRINGS/EL PASO COUNTY DRAINAGE CRITERIA MANUAL, VOLUMES 1 & 2 AND THE EL PASO COUNTY ENGINEERING CRITERIA MANUAL.

2. CONTRACTOR SHALL BE RESPONSIBLE FOR THE NOTIFICATION AND FIELD NOTIFICATION OF ALL EXISTING UTILITIES, WHETHER SHOWN ON THE PLANS OR NOT, BEFORE BEGINNING CONSTRUCTION. LOCATION OF EXISTING UTILITIES SHALL BE VERIFIED BY THE CONTRACTOR PRIOR TO CONSTRUCTION. ALL 811 TO CONTACT THE UTILITY NOTIFICATION CENTER OF COLORADO (UNCC).

3. CONTRACTOR SHALL KEEP A COPY OF THESE APPROVED PLANS, THE GRADING AND EROSION CONTROL PLAN, THE STORMWATER MANAGEMENT PLAN (SWMP), THE SOILS AND GEOTECHNICAL REPORT, AND THE APPROPRIATE DESIGN AND CONSTRUCTION STANDARDS AND SPECIFICATIONS AT THE JOB SITE AT ALL TIMES, INCLUDING THE FOLLOWING:
A. EL PASO COUNTY ENGINEERING CRITERIA MANUAL (ECM)
B. CITY OF COLORADO SPRINGS/EL PASO COUNTY DRAINAGE CRITERIA MANUAL, VOLUMES 1 & 2
C. COLORADO DEPARTMENT OF TRANSPORTATION (CDOT) STANDARD SPECIFICATIONS FOR ROAD AND BRIDGE CONSTRUCTION
D. CDOT M & s STANDARDS.

4. IT IS THE DESIGN ENGINEER'S RESPONSIBILITY TO ACCURATELY SHOW EXISTING CONDITIONS, BOTH ONSITE AND OFFSITE, ON THE CONSTRUCTION PLANS. ANY MODIFICATIONS NECESSARY DUE TO CONFLICTS, OMISSIONS, OR CHANGED CONDITIONS WILL BE ENTIRELY THE DEVELOPER'S RESPONSIBILITY TO RECTIFY.

5. IT IS THE CONTRACTORS RESPONSIBILITY TO UNDERSTAND THE REQUIREMENTS OF ALL JURISDICTIONAL AGENCIES AND TO OBTAIN ALL REQUIRED PERMITS, INCLUDING BUT NOT LIMITED TO EL PASO COUNTY EROSION AND STORMWATER QUALITY CONTROL PERMIT (ESQCP), REGIONAL BUILDING FLOODPLAIN DEVELOPMENT PERMIT, U.S. ARMY CORPS OF ENGINEERS-ISSUED 401 AND/OR 404 PERMITS, AND COUNTY AND STATE FUGITIVE DUST PERMITS.

6. CONTRACTOR SHALL NOT DEVIATE FROM THE PLANS WITHOUT FIRST OBTAINING WRITTEN APPROVAL FROM THE DESIGN ENGINEER AND DSD CONTRACTOR SHALL NOTIFY THE DESIGN ENGINEER IMMEDIATELY UPON DISCOVERY OF ANY ERRORS OR INCONSISTENCIES.

7. THE LIMITS OF CONSTRUCTION SHALL REMAIN WITHIN THE PROPERTY LINE UNLESS OTHERWISE NOTED. THE OWNER/DEVELOPER SHALL OBTAIN WRITTEN PERMISSION AND EASEMENTS, WHERE REQUIRED, FROM ADJOINING PROPERTY OWNER(S) PRIOR TO ANY OFF-SITE DISTURBANCE, GRADING OR CONSTRUCTION.

LEGAL DESCRIPTION

LOT 2 BECKETT AT WOODMEN HILLS FILING NO. 3

ADDRESS

7368 MCLAUGHLIN ROAD, PEYTON, CO 80831

SITE DATA

OWNER/PETITIONER:
SHOPPES AT MCLAUGHLIN 2, LLC
3902 MAIZELAND RD COLORADO SPRINGS CO 80909-1608

PREPARER:
TERRA NOVA ENGINEERING, INC.
721 S. 23RD STREET
COLORADO SPRINGS, CO 80904
(719) 635-6422 OFFICE
(719) 499-2255 MOBILE

DESCRIPTION OF ACTIVITIES:
THERE ARE NO CONSTRUCTION ACTIVITIES PROPOSED ON THIS SITE. THERE IS NO LAND CLEARING PROPOSED. THE OWNER USES MATERIALS AVAILABLE ONSITE IN ORDER TO REPAIR AND MAINTAIN THE RACE TRACK AREAS. THERE ARE SEVERAL DIRT STOCKPILES ONSITE THAT ARE USED FOR THIS PURPOSE.

A SHORT, STEEP DITCH EXISTS ON THE WEST SIDE OF THE SITE. IT HAS BEEN AN EROSION PROBLEM IN THE PAST. THE OWNER PROPOSES TO RE-GRADE IT AND ADD HEAVY EROSION CONTROL BLANKETS ALONG WITH A NATIVE SEED MIX TO THE AREA IN ORDER TO REDUCE THE MAINTENANCE OF THE AREA AS WELL AS KEEP SEDIMENT FROM ACCUMULATING IN THE DRY CREEK BED (ARROYO) LOCATED APPROXIMATELY 700 LF NORTH OF THE SH94 NORTH R/W.

REPAIR ACTIVITIES ON THE RACE TRACK OCCUR PRIMARILY AFTER PRECIPITATION EVENTS. PER THE URBAN DRAINAGE CRITERIA MANUAL INFORMATION ON CH. 7 EC14 FACT SHEET, THE OWNER WILL USE A WATERING TRUCK ON THE BARE DIRT AREAS OF THE TRACK TO MINIMIZE DUST FROM MIGRATING OFFSITE.

THERE ARE TWO RE-FUELING STATIONS LOCATED WITHIN THE SITE. THESE WILL BE SIMILAR IN NATURE TO A CONCRETE WASHOUT AREA AND ARE INTENDED TO BE USED FOR CAPTURING ANY FUEL SPILLS THAT OCCUR AS A RESULT OF RACING ACTIVITY. FUEL SPILLS WILL BE MITIGATED WITH THE USE OF SPILL KITS AND CONTAMINATED SOIL BARRELS FOR STORAGE OF SOILED DIRT. ONCE THEY ARE FILLED, THEY WILL BE PROPERLY DISPOSED OF BY A QUALIFIED CONTRACTOR.

THE TOTAL SITE SIZE IS 86 ACRES. APPROXIMATELY 8 ACRES WOULD BE USED FOR THE MAINTENANCE OF THE TRACK AREAS AND SHALL BE MAINTAINED TO REDUCE SEDIMENTATION FROM MIGRATING TO OFF-SITE OR TO DOWNSTREAM CREEK BEDS.

THE SOILS ON THIS SITE ARE NOTED AS TYPE 56, NELSON-TASSEL FINE SANDY LOAM W/3-18 PERCENT SLOPES. A SOILS MAP HAS BEEN INCLUDED IN THE FINAL DRAINAGE REPORT. EXISTING SITE VEGETATION IS CONSISTENT WITH AN ARID CLIMATE.

THERE ARE NO WETLANDS ON THIS SITE.

THERE ARE NO POTENTIAL POLLUTANTS EXISTING OR PROPOSED FOR STORAGE ON THIS SITE.

THE RECEIVING WATERS FOR THIS AREA IS JIMMY CAMP CREEK. PER THE FINAL DRAINAGE REPORT, THE MAJORITY OF THE SITE FLOWS TO THE WEST TOWARD AN EXISTING ARROYO. THERE IS NO EXISTING OR PROPOSED STORMWATER CONVEYANCE SYSTEMS ASSOCIATED WITH THIS SITE.

THE BEST MANAGEMENT PRACTICES (BMP'S) PROPOSED FOR THIS SITE INCLUDE THE FOLLOWING:
1. VEHICLE TRACKING CONTROL AT THE EXIT POINT OF THE SITE,
2. SEDIMENT CONTROL STRAW WADDLES INSTALLED AROUND THE DIRT STOCKPILES LOCATED NEAR THE SOUTHERN PROPERTY BOUNDARY & THE TEMPORARY SEDIMENTATION POND AT NORTH EDGE OF EXISTING PARKING AREA,
3. DUST CONTROL MEASURES THROUGHOUT THE TRACK SITE,
4. FUEL SPILL MITIGATION AS PREVIOUSLY DESCRIBED.

THESE MEASURES WILL REMAIN IN PLACE AND BE MAINTAINED WHILE THE RACE TRACK IS IN OPERATION.

THE PROPERTY OWNER OR OWNERS REPRESENTATIVE IS RESPONSIBLE FOR INSPECTING AND MAINTAINING THE SITE ON A REGULAR BASIS. INITIAL CRITERIA FOR THE OCCURRENCE OF INSPECTIONS IS AS FOLLOWS:
1. ONCE EVERY 14 DAYS OR
2. AFTER ANY PRECIPITATION OR SNOWMELT EVENT THAT IS SIGNIFICANT ENOUGH TO CAUSE SURFACE EROSION.

A WRITTEN RECORD OF INSPECTIONS SHALL BE KEPT BY THE OWNER OR OWNERS REPRESENTATIVE AND MADE AVAILABLE TO THE COUNTY UPON REQUEST. THIS WILL CONTINUE UNTIL THE SITE IS STABILIZED AND THE STOCKPILES ARE NO LONGER NEEDED.

SINCE THERE ARE NO STRUCTURES PROPOSED ON THIS SITE, IT IS REQUESTED THAT THE RECORDS BE KEPT NEXT DOOR AT 12750 SH94 WHERE THE OWNER HAS AN AUTOMOBILE SALVAGE YARD.

A COST ESTIMATE FOR THE BMP'S ON THIS SITE IS INCLUDED ON THIS PLAN AND IN THE FINAL DRAINAGE REPORT.

FLOODPLAIN STATEMENT:

THIS PROPERTY IS LOCATED WITHIN ZONE X (AREAS DETERMINED TO BE OUTSIDE OF THE 500-YEAR FLOODPLAIN) AS ESTABLISHED BY THE FEDERAL EMERGENCY MANAGEMENT AGENCY (FEMA), PER FLOOD INSURANCE RATE MAP (FIRM) PANEL 08041C0575 F (EFFECTIVE DATE: MARCH 17, 1997).

GENERAL NOTES

1. THE PLAN SHALL NOT SUBSTANTIALLY CHANGE THE DEPTH OF COVER, OR ACCESS TO UTILITY FACILITIES. ADDITIONALLY, THE PLAN SHALL NOT INCREASE OR DIVERT WATER TOWARDS UTILITY FACILITIES. ANY CHANGES TO UTILITY FACILITIES TO ACCOMMODATE THE PLAN, MUST BE DISCUSSED AND AGREED TO BY THE AFFECTED UTILITY PRIOR TO IMPLEMENTING THE PLAN. THE RESULTING COST TO RELOCATE OR PROTECT UTILITIES, OR PROVIDE INTERIM ACCESS IS AT THE EXPENSE OF THE PLAN APPLICANT.

EROSION CONTROL COST OPINION:

1.	SEDIMENT LOG @ $200 EACH	$	200
2.	VEHICLE TRACKING CONTROL 1 EA. @ $1625/PAD	$	1625
3.	INLET PROTECTION 1 EA. @ $100/EACH	$	100
4.	REFUELING STATIONS 1 EA @ $400/STATION	$	400
5.	FUEL SPILL KIT 2 EA @ $200/KIT	$	400
6.	CONCRETE WASHOUT 1 EA @ $760/EA	$	760
7.	ROCK SOCKS 5 EA @ $110/EA	$	550
8.	MAINTENANCE @ 40%	$	1,614
	TOTAL	$	5,649

SHEET INDEX

STATEMENTS

DESIGN ENGINEER'S STATEMENT:
THESE DETAILED PLANS AND SPECIFICATIONS WERE PREPARED UNDER MY DIRECTION AND SUPERVISION. SAID PLANS AND SPECIFICATIONS HAVE BEEN PREPARED ACCORDING TO THE CRITERIA ESTABLISHED BY THE COUNTY FOR DETAILED ROADWAY, DRAINAGE, GRADING AND EROSION CONTROL PLANS AND SPECIFICATIONS, AND SAID PLANS AND SPECIFICATIONS ARE IN CONFORMITY WITH APPLICABLE MASTER DRAINAGE PLANS AND MASTER TRANSPORTATION PLANS. SAID PLANS AND SPECIFICATIONS MEET THE PURPOSES FOR WHICH THE PARTICULAR ROADWAY AND DRAINAGE FACILITIES ARE DESIGNED AN ARE CORRECT TO THE BEST OF MY KNOWLEDGE AND BELIEF. I ACCEPT RESPONSIBILITY FOR ANY LIABILITY CAUSED BY ANY NEGLIGENT ACTS, ERRORS OR OMISSIONS ON MY PART TO PREPARATION OF THESE DETAILED PLANS AND SPECIFICATIONS.

L DUCETT, P.E. #32339 DATE
FOR AND ON BEHALF OF TERRA NOVA ENGINEERING, INC.

OWNER/DEVELOPERS STATEMENT:
I, THE OWNER/DEVELOPER HAVE READ AND WILL COMPLY WITH ALL OF THE REQUIREMENTS SPECIFIED IN THESE DETAILED PLANS AND SPECIFICATIONS.

OWNER DATE

ADDRESS STATE ZIP

PHONE FAX

EL PASO COUNTY:
COUNTY PLAN REVIEW IS PROVIDED ONLY FOR GENERAL CONFORMANCE WITH COUNTY DESIGN CRITERIA. THE COUNTY IS NOT RESPONSIBLE FOR THE ACCURACY AND ADEQUACY OF THE DESIGN, DIMENSIONS, AND/OR ELEVATIONS WHICH SHALL BE CONFIRMED AT THE JOB SITE. THE COUNTY THROUGH THE APPROVAL OF THIS DOCUMENT ASSUMES NO RESPONSIBILITY FOR COMPLETENESS AND/OR ACCURACY OF THIS DOCUMENT.
FILED IN ACCORDANCE WITH THE REQUIREMENTS OF THE EL PASO COUNTY LAND DEVELOPMENT CODE, DRAINAGE CRITERIA MANUAL AND ENGINEERING CRITERIA MANUAL AS AMENDED.

JENNIFER IRVINE, P.E., COUNTY ENGINEER/ECM ADMINISTRATOR DATE

GENERAL NOTES

1. THE LOCATIONS OF EXISTING UTILITIES HAVE BEEN SHOWN ACCORDING TO THE BEST AVAILABLE INFORMATION. THE CONTRACTOR IS RESPONSIBLE FOR FIELD LOCATION AND VERIFICATION OF EXISTING UTILITIES PRIOR TO BEGINNING WORK. IF IT APPEARS THAT THERE COULD BE A CONFLICT WITH ANY UTILITIES, WHETHER INDICATED ON THE PLANS OR NOT, THE CONTRACTOR IS TO NOTIFY THE ENGINEER AND OWNER IMMEDIATELY. THE CONTRACTOR IS RESPONSIBLE FOR THE PROTECTION AND REPAIR (IF NECESSARY) OF ALL UTILITIES.

2. THE PREPARED EROSION/SEDIMENT CONTROL PLAN IS TO BE CONSIDERED A PART OF THESE PLANS AND ITS REQUIREMENTS ADHERED TO DURING THE CONSTRUCTION OF THIS PROJECT.

REVISIONS

NO.	DESCRIPTION	DATE

UNTIL SUCH TIME AS THESE DRAWINGS ARE APPROVED BY THE APPROPRIATE REVIEWING AGENCIES, TERRA NOVA ENGINEERING, INC. APPROVES THEIR USE FOR ANY PURPOSES DESIGNATED BY WRITTEN AUTHORIZATION.

PREPARED FOR:
TBONE CONSTRUCTION
ATTN: MR. JIM CHILDS
1310 FORD STREET
COLORADO SPRINGS, CO 80915
(719) 470-1456

Terra Nova Engineering, Inc.
"Creative Civil Engineering Solutions"
721 S. 23RD STREET
COLORADO SPRINGS, CO 80904
OFFICE: 719-635-6422
FAX: 719-635-6428
www.tnesinc.com

LOT 2 BECKETT AT WOODMEN HILLS FIL NO. 3

GRADING & EROSION CONTROL PLAN
COVER SHEET
SHOPPES AT MCLAUGHLIN II

DESIGNED BY LD
DRAWN BY DLM
CHECKED BY LD
H-SCALE AS NOTED
V-SCALE N/A
JOB NO. 1729.00
DATE ISSUED 11/2/18
SHEET NO. 1 OF 3

N:\jobs\1729.00\Drawings\CD\172900 GRDG.dwg, 11/6/2018 11:20:44 AM, DWG To PDF.pc3

EROSION CONTROL LEGEND

KEY	TITLE	SYMBOL
SCL	SEDIMENT CONTROL LOG	—SCL—
SSA	STABILIZED STAGING AREA	
VTC	VEHICLE TRACKING CONTROL	
SP	STOCKPILE PROTECTION	
CWA	CONCRETE WASHOUT AREA	
IP	INLET PROTECTION	

4' CONCRETE CHASE
SECTION A–A

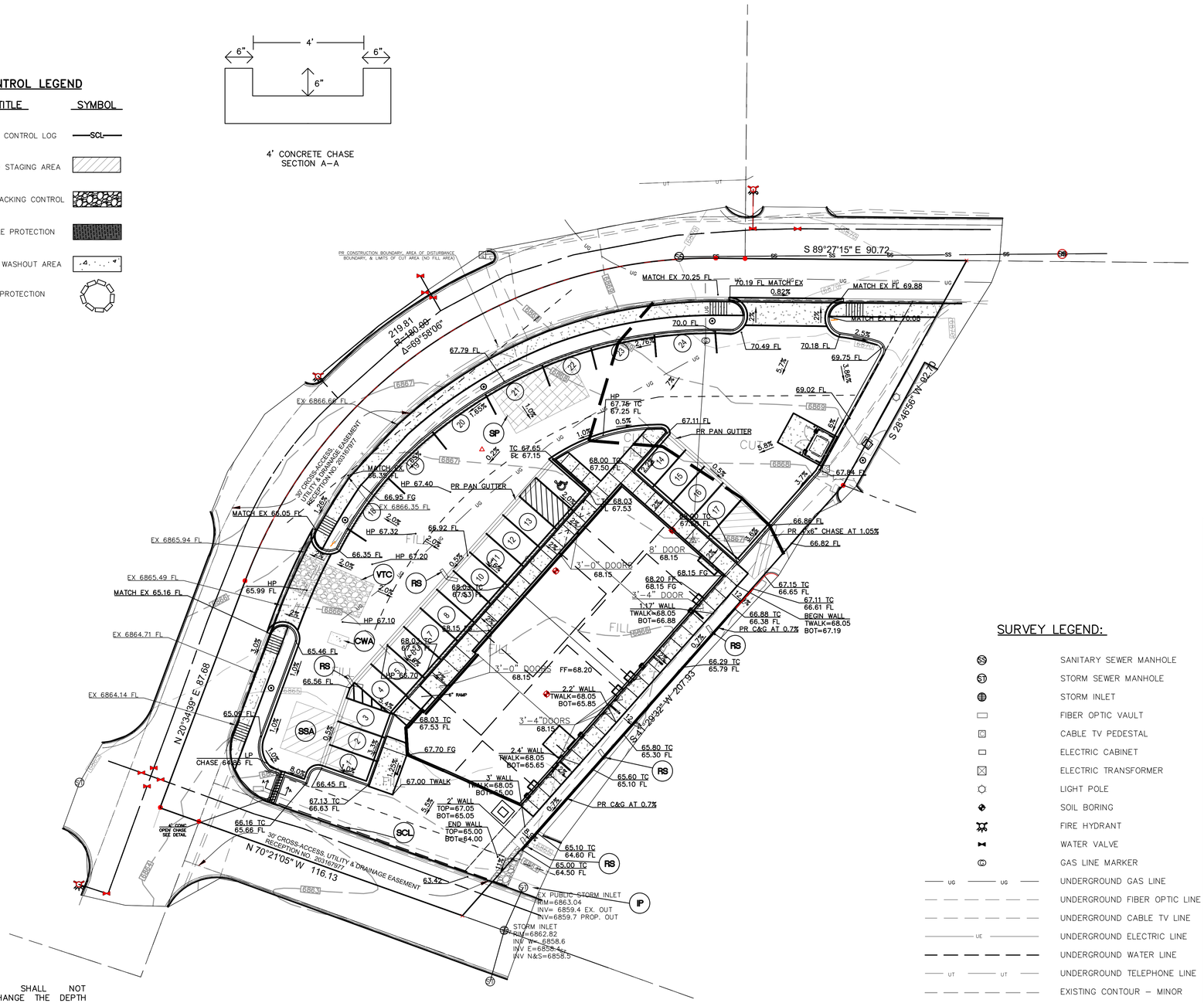

GENERAL NOTES

1. THE PLAN SHALL NOT SUBSTANTIALLY CHANGE THE DEPTH OF COVER, OR ACCESS TO UTILITY FACILITIES. ADDITIONALLY, THE PLAN SHALL NOT INCREASE OR DIVERT WATER TOWARDS UTILITY FACILITIES. ANY CHANGES TO UTILITY FACILITIES TO ACCOMMODATE THE PLAN, MUST BE DISCUSSED AND AGREED TO BY THE AFFECTED UTILITY PRIOR TO IMPLEMENTING THE PLAN. THE RESULTING COST TO RELOCATE OR PROTECT UTILITIES, OR PROVIDE INTERIM ACCESS IS AT THE EXPENSE OF THE PLAN APPLICANT.

N

20' 0 20' 40'

SCALE: 1"=20'

SURVEY LEGEND:

- SANITARY SEWER MANHOLE
- STORM SEWER MANHOLE
- STORM INLET
- FIBER OPTIC VAULT
- CABLE TV PEDESTAL
- ELECTRIC CABINET
- ELECTRIC TRANSFORMER
- LIGHT POLE
- SOIL BORING
- FIRE HYDRANT
- WATER VALVE
- GAS LINE MARKER
- UG — UG — UNDERGROUND GAS LINE
- UNDERGROUND FIBER OPTIC LINE
- UNDERGROUND CABLE TV LINE
- UE — UNDERGROUND ELECTRIC LINE
- UNDERGROUND WATER LINE
- UT — UT — UNDERGROUND TELEPHONE LINE
- EXISTING CONTOUR – MINOR
- EXISTING CONTOUR – MAJOR
- PROPOSED CONTOUR
- SPILL CURB

MM-1 Concrete Washout Area (CWA)

CWA MAINTENANCE NOTES

1. INSPECT BMPs EACH WORKDAY, AND MAINTAIN THEM IN EFFECTIVE OPERATING CONDITION. MAINTENANCE OF BMPs SHOULD BE PROACTIVE, NOT REACTIVE. INSPECT BMPs AS SOON AS POSSIBLE (AND ALWAYS WITHIN 24 HOURS) FOLLOWING A STORM THAT CAUSES SURFACE EROSION, AND PERFORM NECESSARY MAINTENANCE.

2. FREQUENT OBSERVATIONS AND MAINTENANCE ARE NECESSARY TO MAINTAIN BMPs IN EFFECTIVE OPERATING CONDITION. INSPECTIONS AND CORRECTIVE MEASURES SHOULD BE DOCUMENTED THOROUGHLY.

3. WHERE BMPs HAVE FAILED, REPAIR OR REPLACEMENT SHOULD BE INITIATED UPON DISCOVERY OF THE FAILURE.

4. THE CWA SHALL BE REPAIRED, CLEANED, OR ENLARGED AS NECESSARY TO MAINTAIN CAPACITY FOR CONCRETE WASTE. CONCRETE MATERIALS, ACCUMULATED IN PIT, SHALL BE REMOVED ONCE THE MATERIALS HAVE REACHED A DEPTH OF 2'.

5. CONCRETE WASHOUT WATER, WASTED PIECES OF CONCRETE AND ALL OTHER DEBRIS IN THE SUBSURFACE PIT SHALL BE TRANSPORTED FROM THE JOB SITE IN A WATER-TIGHT CONTAINER AND DISPOSED OF PROPERLY.

6. THE CWA SHALL REMAIN IN PLACE UNTIL ALL CONCRETE FOR THE PROJECT IS PLACED.

7. WHEN THE CWA IS REMOVED, COVER THE DISTURBED AREA WITH TOP SOIL, SEED AND MULCH OR OTHERWISE STABILIZED IN A MANNER APPROVED BY THE LOCAL JURISDICTION.

(DETAIL ADAPTED FROM DOUGLAS COUNTY, COLORADO AND THE CITY OF PARKER, COLORADO, NOT AVAILABLE IN AUTOCAD).

NOTE: MANY JURISDICTIONS HAVE BMP DETAILS THAT VARY FROM UDFCD STANDARD DETAILS. CONSULT WITH LOCAL JURISDICTIONS AS TO WHICH DETAIL SHOULD BE USED WHEN DIFFERENCES ARE NOTED.

CWA-4 Urban Drainage and Flood Control District November 2010
Urban Storm Drainage Criteria Manual Volume 3

Concrete Washout Area (CWA) MM-1

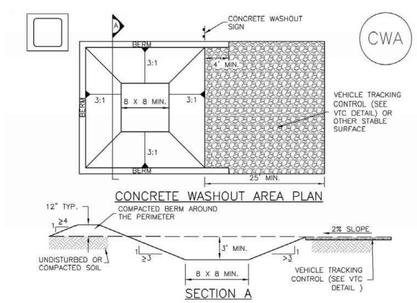

CWA–1. CONCRETE WASHOUT AREA

CWA INSTALLATION NOTES

1. SEE PLAN VIEW FOR:
   –CWA INSTALLATION LOCATION.

2. DO NOT LOCATE AN UNLINED CWA WITHIN 400' OF ANY NATURAL DRAINAGE PATHWAY OR WATERBODY. DO NOT LOCATE WITHIN 1,000' OF ANY WELLS OR DRINKING WATER SOURCES. IF SITE CONSTRAINTS MAKE THIS INFEASIBLE, OR IF HIGHLY PERMEABLE SOILS EXIST ON SITE, THE CWA MUST BE INSTALLED WITH AN IMPERMEABLE LINER (16 MIL MIN. THICKNESS) OR SURFACE STORAGE ALTERNATIVES USING PREFABRICATED CONCRETE WASHOUT DEVICES OR A LINED ABOVE GROUND STORAGE ARE SHOULD BE USED.

3. THE CWA SHALL BE INSTALLED PRIOR TO CONCRETE PLACEMENT ON SITE.

4. CWA SHALL INCLUDE A FLAT SUBSURFACE PIT THAT IS AT LEAST 8' BY 8' SLOPES LEADING OUT OF THE SUBSURFACE PIT SHALL BE 3:1 OR FLATTER. THE PIT SHALL BE AT LEAST 3' DEEP.

5. BERM SURROUNDING SIDES AND BACK OF THE CWA SHALL HAVE MINIMUM HEIGHT OF 1'.

6. VEHICLE TRACKING PAD SHALL BE SLOPED 2% TOWARDS THE CWA.

7. SIGNS SHALL BE PLACED AT THE CONSTRUCTION ENTRANCE, AT THE CWA, AND ELSEWHERE AS NECESSARY TO CLEARLY INDICATE THE LOCATION OF THE CWA TO OPERATORS OF CONCRETE TRUCKS AND PUMP RIGS.

8. USE EXCAVATED MATERIAL FOR PERIMETER BERM CONSTRUCTION.

November 2010 Urban Drainage and Flood Control District CWA-3
Urban Storm Drainage Criteria Manual Volume 3

REVISIONS		
NO.	DESCRIPTION	DATE

UNTIL SUCH TIME AS THESE DRAWINGS ARE APPROVED BY THE APPROPRIATE REVIEWING AGENCIES, TERRA NOVA ENGINEERING, INC. APPROVES THEIR USE FOR PURPOSES DESIGNATED BY WRITTEN AUTHORIZATION.

PREPARED FOR:
SHOPPES AT MCLAUHLIN II
ATTN: OWNER
3902 MAIZELAND RD
COLORADO SPRINGS, CO 80909

Terra Nova Engineering, Inc.
Creative Civil Engineering Solutions
721 S. 23RD STREET
COLORADO SPRINGS, CO 80904
OFFICE: 719-635-6422
FAX: 719-635-6426
www.tneainc.com

LOT 2 BECKETT AT WOODMEN HILLS FILING NO. 3

GRADING & EROSION CONTROL PLAN
7368 MCLAUGHLIN ROAD

DESIGNED BY	LD
DRAWN BY	LD
CHECKED BY	LD
H-SCALE	AS NOTED
V-SCALE	N/A
JOB NO.	1729.00
DATE ISSUED	11/2/18
SHEET NO.	2 OF 3

N:\jobs\1729.00\Drawings\CD\172900 GRDG.dwg, 11/6/2018 11:21:10 AM, DWG To PDF.pc3

Stockpile Management (SP) — MM-2

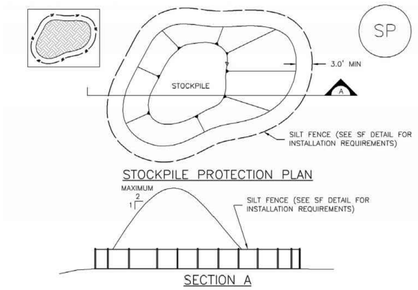

SP–1. STOCKPILE PROTECTION

STOCKPILE PROTECTION INSTALLATION NOTES

1. SEE PLAN VIEW FOR:
   –LOCATION OF STOCKPILES.
   –TYPE OF STOCKPILE PROTECTION.

2. INSTALL PERIMETER CONTROLS IN ACCORDANCE WITH THEIR RESPECTIVE DESIGN DETAILS. SILT FENCE IS SHOWN IN THE STOCKPILE PROTECTION DETAILS; HOWEVER, OTHER TYPES OF PERIMETER CONTROLS INCLUDING SEDIMENT CONTROL LOGS OR ROCK SOCKS MAY BE SUITABLE IN SOME CIRCUMSTANCES. CONSIDERATIONS FOR DETERMINING THE APPROPRIATE TYPE OF PERIMETER CONTROL FOR A STOCKPILE INCLUDE WHETHER THE STOCKPILE IS LOCATED ON A PERVIOUS OR IMPERVIOUS SURFACE, THE RELATIVE HEIGHTS OF THE PERIMETER CONTROL AND STOCKPILE, THE ABILITY OF THE PERIMETER CONTROL TO CONTAIN THE STOCKPILE WITHOUT FAILING IN THE EVENT THAT MATERIAL FROM THE STOCKPILE SHIFTS OR SLUMPS AGAINST THE PERIMETER, AND OTHER FACTORS.

3. STABILIZE THE STOCKPILE SURFACE WITH SURFACE ROUGHENING, TEMPORARY SEEDING AND MULCHING, EROSION CONTROL BLANKETS, OR SOIL BINDERS. SOILS STOCKPILED FOR AN EXTENDED PERIOD (TYPICALLY FOR MORE THAN 60 DAYS) SHOULD BE SEEDED AND MULCHED WITH A TEMPORARY GRASS COVER ONCE THE STOCKPILE IS PLACED (TYPICALLY WITHIN 14 DAYS). USE OF MULCH ONLY OR A SOIL BINDER IS ACCEPTABLE IF THE STOCKPILE WILL BE IN PLACE FOR A MORE LIMITED TIME PERIOD (TYPICALLY 30–60 DAYS).

4. FOR TEMPORARY STOCKPILES ON THE INTERIOR PORTION OF A CONSTRUCTION SITE, WHERE OTHER DOWNGRADIENT CONTROLS, INCLUDING PERIMETER CONTROL, ARE IN PLACE, STOCKPILE PERIMETER CONTROLS MAY NOT BE REQUIRED.

Sediment Control Log (SCL) — SC-2

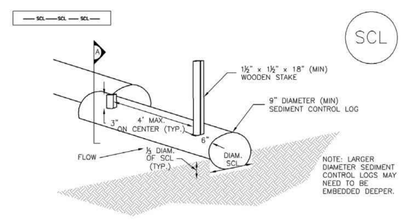

SCL–1. SEDIMENT CONTROL LOG

Stabilized Staging Area (SSA) — SM-6

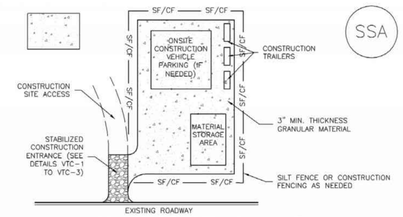

SSA–1. STABILIZED STAGING AREA

STABILIZED STAGING AREA INSTALLATION NOTES

1. SEE PLAN VIEW FOR
   –LOCATION OF STAGING AREA(S).
   –CONTRACTOR MAY ADJUST LOCATION AND SIZE OF STAGING AREA WITH APPROVAL FROM THE LOCAL JURISDICTION.

2. STABILIZED STAGING AREA SHOULD BE APPROPRIATE FOR THE NEEDS OF THE SITE. OVERSIZING RESULTS IN A LARGER AREA TO STABILIZE FOLLOWING CONSTRUCTION.

3. STAGING AREA SHALL BE STABILIZED PRIOR TO OTHER OPERATIONS ON THE SITE.

4. THE STABILIZED STAGING AREA SHALL CONSIST OF A MINIMUM 3" THICK GRANULAR MATERIAL.

5. UNLESS OTHERWISE SPECIFIED BY LOCAL JURISDICTION, ROCK SHALL CONSIST OF DOT SECT. #703, AASHTO #3 COARSE AGGREGATE OR 6" (MINUS) ROCK.

6. ADDITIONAL PERIMETER BMPs MAY BE REQUIRED INCLUDING BUT NOT LIMITED TO SILT FENCE AND CONSTRUCTION FENCING.

STABILIZED STAGING AREA MAINTENANCE NOTES

1. INSPECT BMPs EACH WORKDAY, AND MAINTAIN THEM IN EFFECTIVE OPERATING CONDITION. MAINTENANCE OF BMPs SHOULD BE PROACTIVE, NOT REACTIVE. INSPECT BMPs AS SOON AS POSSIBLE (AND ALWAYS WITHIN 24 HOURS) FOLLOWING A STORM THAT CAUSES SURFACE EROSION, AND PERFORM NECESSARY MAINTENANCE.

2. FREQUENT OBSERVATIONS AND MAINTENANCE ARE NECESSARY TO MAINTAIN BMPs IN EFFECTIVE OPERATING CONDITION. INSPECTIONS AND CORRECTIVE MEASURES SHOULD BE DOCUMENTED THOROUGHLY.

3. WHERE BMPs HAVE FAILED, REPAIR OR REPLACEMENT SHOULD BE INITIATED UPON DISCOVERY OF THE FAILURE.

4. ROCK SHALL BE REAPPLIED OR REGRADED AS NECESSARY IF RUTTING OCCURS OR UNDERLYING SUBGRADE BECOMES EXPOSED.

Vehicle Tracking Control (VTC) — SM-4

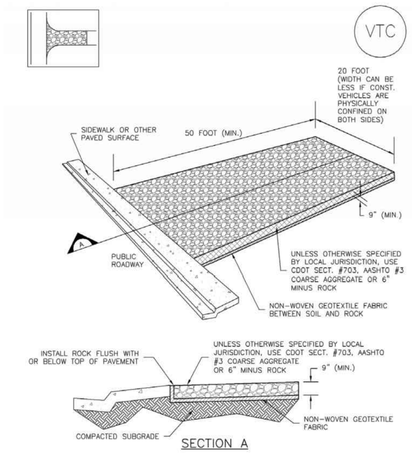

VTC–1. AGGREGATE VEHICLE TRACKING CONTROL

MM-2 Stockpile Management (SM)

STOCKPILE PROTECTION MAINTENANCE NOTES

1. INSPECT BMPs EACH WORKDAY, AND MAINTAIN THEM IN EFFECTIVE OPERATING CONDITION. MAINTENANCE OF BMPs SHOULD BE PROACTIVE, NOT REACTIVE. INSPECT BMPs AS SOON AS POSSIBLE (AND ALWAYS WITHIN 24 HOURS) FOLLOWING A STORM THAT CAUSES SURFACE EROSION, AND PERFORM NECESSARY MAINTENANCE.

2. FREQUENT OBSERVATIONS AND MAINTENANCE ARE NECESSARY TO MAINTAIN BMPs IN EFFECTIVE OPERATING CONDITION. INSPECTIONS AND CORRECTIVE MEASURES SHOULD BE DOCUMENTED THOROUGHLY.

3. WHERE BMPs HAVE FAILED, REPAIR OR REPLACEMENT SHOULD BE INITIATED UPON DISCOVERY OF THE FAILURE.

STOCKPILE PROTECTION MAINTENANCE NOTES

4. IF PERIMETER PROTECTION MUST BE MOVED TO ACCESS SOIL STOCKPILE, REPLACE PERIMETER CONTROLS BY THE END OF THE WORKDAY.

5. STOCKPILE PERIMETER CONTROLS CAN BE REMOVED ONCE ALL THE MATERIAL FROM THE STOCKPILE HAS BEEN USED.

(DETAILS ADAPTED FROM PARKER, COLORADO, NOT AVAILABLE IN AUTOCAD)

NOTE: MANY JURISDICTIONS HAVE BMP DETAILS THAT VARY FROM UDFCD STANDARD DETAILS. CONSULT WITH LOCAL JURISDICTIONS AS TO WHICH DETAIL SHOULD BE USED WHEN DIFFERENCES ARE NOTED.

Sediment Control Log (SCL) — SC-2

SEDIMENT CONTROL LOG INSTALLATION NOTES

1. SEE PLAN VIEW FOR LOCATION AND LENGTH OF SEDIMENT CONTROL LOGS.

2. SEDIMENT CONTROL LOGS THAT ACT AS A PERIMETER CONTROL SHALL BE INSTALLED PRIOR TO ANY UPGRADIENT LAND–DISTURBING ACTIVITIES.

3. SEDIMENT CONTROL LOGS SHALL CONSIST OF STRAW, COMPOST, EXCELSIOR OR COCONUT FIBER, AND SHALL BE FREE OF ANY NOXIOUS WEED SEEDS OR DEFECTS INCLUDING RIPS, HOLES AND OBVIOUS WEAR.

4. SEDIMENT CONTROL LOGS MAY BE USED AS SMALL CHECK DAMS IN DITCHES AND SWALES. HOWEVER, THEY SHOULD NOT BE USED IN PERENNIAL STREAMS OR HIGH VELOCITY DRAINAGE WAYS.

5. IT IS RECOMMENDED THAT SEDIMENT CONTROL LOGS BE TRENCHED INTO THE GROUND TO A DEPTH OF APPROXIMATELY ⅓ OF THE DIAMETER OF THE LOG. IF TRENCHING TO THIS DEPTH IS NOT FEASIBLE AND/OR DESIRABLE (SHORT TERM INSTALLATION WITH DESIRE NOT TO DAMAGE LANDSCAPE) A LESSER TRENCHING DEPTH MAY BE ACCEPTABLE WITH MORE ROBUST STAKING

6. THE UPHILL SIDE OF THE SEDIMENT CONTROL LOG SHALL BE BACKFILLED WITH SOIL THAT IS FREE OF ROCKS AND DEBRIS. THE SOIL SHALL BE TIGHTLY COMPACTED INTO THE SHAPE OF A RIGHT TRIANGLE USING A SHOVEL OR WEIGHTED LAWN ROLLER.

7. FOLLOW MANUFACTURERS' GUIDANCE FOR STAKING. IF MANUFACTURERS' INSTRUCTIONS DO NOT SPECIFY SPACING, STAKES SHALL BE PLACED ON 4' CENTERS AND EMBEDDED A MINIMUM OF 6" INTO THE GROUND. 3" OF THE STAKE SHALL PROTRUDE FROM THE TOP OF THE LOG. STAKES THAT ARE BROKEN PRIOR TO INSTALLATION SHALL BE REPLACED.

SEDIMENT CONTROL LOG MAINTENANCE NOTES

1. INSPECT BMPs EACH WORKDAY, AND MAINTAIN THEM IN EFFECTIVE OPERATING CONDITION. MAINTENANCE OF BMPs SHOULD BE PROACTIVE, NOT REACTIVE. INSPECT BMPs AS SOON AS POSSIBLE (AND ALWAYS WITHIN 24 HOURS) FOLLOWING A STORM THAT CAUSES SURFACE EROSION, AND PERFORM NECESSARY MAINTENANCE.

2. FREQUENT OBSERVATIONS AND MAINTENANCE ARE NECESSARY TO MAINTAIN BMPs IN EFFECTIVE OPERATING CONDITION. INSPECTIONS AND CORRECTIVE MEASURES SHOULD BE DOCUMENTED THOROUGHLY.

3. WHERE BMPs HAVE FAILED, REPAIR OR REPLACEMENT SHOULD BE INITIATED UPON DISCOVERY OF THE FAILURE.

4. SEDIMENT ACCUMULATED UPSTREAM OF SEDIMENT CONTROL LOG SHALL BE REMOVED AS NEEDED TO MAINTAIN FUNCTIONALITY OF THE BMP, TYPICALLY WHEN DEPTH OF ACCUMULATED SEDIMENTS IS APPROXIMATELY ½ OF THE HEIGHT OF THE SEDIMENT CONTROL LOG.

5. SEDIMENT CONTROL LOG SHALL BE REMOVED AT THE END OF CONSTRUCTION. IF DISTURBED AREAS EXIST AFTER REMOVAL, THEY SHALL BE COVERED WITH TOP SOIL, SEEDED AND MULCHED OR OTHERWISE STABILIZED IN A MANNER APPROVED BY THE LOCAL JURISDICTION.

(DETAILS ADAPTED FROM TOWN OF PARKER, COLORADO, JEFFERSON COUNTY, COLORADO, DOUGLAS COUNTY, COLORADO, AND CITY OF AURORA, COLORADO, NOT AVAILABLE IN AUTOCAD)

NOTE: MANY JURISDICTIONS HAVE BMP DETAILS THAT VARY FROM UDFCD STANDARD DETAILS. CONSULT WITH LOCAL JURISDICTIONS AS TO WHICH DETAIL SHOULD BE USED WHEN DIFFERENCES ARE NOTED.

SM-6 Stabilized Staging Area (SSA)

STABILIZED STAGING AREA MAINTENANCE NOTES

5. STABILIZED STAGING AREA SHALL BE ENLARGED IF NECESSARY TO CONTAIN PARKING, STORAGE, AND UNLOADING/LOADING OPERATIONS.

6. THE STABILIZED STAGING AREA SHALL BE REMOVED AT THE END OF CONSTRUCTION. THE GRANULAR MATERIAL SHALL BE REMOVED OR, IF APPROVED BY THE LOCAL JURISDICTION, USED ON SITE, AND THE AREA COVERED WITH TOPSOIL, SEEDED AND MULCHED OR OTHERWISE STABILIZED IN A MANNER APPROVED BY LOCAL JURISDICTION.

NOTE: MANY MUNICIPALITIES PROHIBIT THE USE OF RECYCLED CONCRETE AS GRANULAR MATERIAL FOR STABILIZED STAGING AREAS DUE TO DIFFICULTIES WITH RE–ESTABLISHMENT OF VEGETATION IN AREAS WHERE RECYCLED CONCRETE WAS PLACED.

NOTE: MANY JURISDICTIONS HAVE BMP DETAILS THAT VARY FROM UDFCD STANDARD DETAILS. CONSULT WITH LOCAL JURISDICTIONS AS TO WHICH DETAIL SHOULD BE USED WHEN DIFFERENCES ARE NOTED.

(DETAILS ADAPTED FROM DOUGLAS COUNTY, COLORADO, NOT AVAILABLE IN AUTOCAD)

SM-4 Vehicle Tracking Control (VTC)

STABILIZED CONSTRUCTION ENTRANCE/EXIT INSTALLATION NOTES

1. SEE PLAN VIEW FOR
   –LOCATION OF CONSTRUCTION ENTRANCE(S)/EXIT(S).
   –TYPE OF CONSTRUCTION ENTRANCE(S)/EXITS(S) (WITH/WITHOUT WHEEL WASH, CONSTRUCTION MAT OR TRM).

2. CONSTRUCTION MAT OR TRM STABILIZED CONSTRUCTION ENTRANCES ARE ONLY TO BE USED ON SHORT DURATION PROJECTS (TYPICALLY RANGING FROM A WEEK TO A MONTH) WHERE THERE WILL BE LIMITED VEHICULAR ACCESS.

3. A STABILIZED CONSTRUCTION ENTRANCE/EXIT SHALL BE LOCATED AT ALL ACCESS POINTS WHERE VEHICLES ACCESS THE CONSTRUCTION SITE FROM PAVED RIGHT–OF–WAYS.

4. STABILIZED CONSTRUCTION ENTRANCE/EXIT SHALL BE INSTALLED PRIOR TO ANY LAND DISTURBING ACTIVITIES.

5. A NON–WOVEN GEOTEXTILE FABRIC SHALL BE PLACED UNDER THE STABILIZED CONSTRUCTION ENTRANCE/EXIT PRIOR TO THE PLACEMENT OF ROCK.

6. UNLESS OTHERWISE SPECIFIED BY LOCAL JURISDICTION, ROCK SHALL CONSIST OF DOT SECT. #703, AASHTO #3 COARSE AGGREGATE OR 6" (MINUS) ROCK.

STABILIZED CONSTRUCTION ENTRANCE/EXIT MAINTENANCE NOTES

1. INSPECT BMPs EACH WORKDAY, AND MAINTAIN THEM IN EFFECTIVE OPERATING CONDITION. MAINTENANCE OF BMPs SHOULD BE PROACTIVE, NOT REACTIVE. INSPECT BMPs AS SOON AS POSSIBLE (AND ALWAYS WITHIN 24 HOURS) FOLLOWING A STORM THAT CAUSES SURFACE EROSION, AND PERFORM NECESSARY MAINTENANCE.

2. FREQUENT OBSERVATIONS AND MAINTENANCE ARE NECESSARY TO MAINTAIN BMPs IN EFFECTIVE OPERATING CONDITION. INSPECTIONS AND CORRECTIVE MEASURES SHOULD BE DOCUMENTED THOROUGHLY.

3. WHERE BMPs HAVE FAILED, REPAIR OR REPLACEMENT SHOULD BE INITIATED UPON DISCOVERY OF THE FAILURE.

4. ROCK SHALL BE REAPPLIED OR REGRADED AS NECESSARY TO THE STABILIZED ENTRANCE/EXIT TO MAINTAIN A CONSISTENT DEPTH.

5. SEDIMENT TRACKED ONTO PAVED ROADS IS TO BE REMOVED THROUGHOUT THE DAY AND AT THE END OF THE DAY BY SHOVELING OR SWEEPING. SEDIMENT MAY NOT BE WASHED DOWN STORM SEWER DRAINS.

NOTE: MANY JURISDICTIONS HAVE BMP DETAILS THAT VARY FROM UDFCD STANDARD DETAILS. CONSULT WITH LOCAL JURISDICTIONS AS TO WHICH DETAIL SHOULD BE USED WHEN DIFFERENCES ARE NOTED.

(DETAILS ADAPTED FROM CITY OF BROOMFIELD, COLORADO, NOT AVAILABLE IN AUTOCAD)

REVISIONS		
NO.	DESCRIPTION	DATE

UNTIL SUCH TIME AS THESE DRAWINGS ARE APPROVED BY THE APPROPRIATE REVIEWING AGENCIES, TERRA NOVA ENGINEERING, INC. APPROVES THEIR USE FOR PURPOSES DESIGNATED BY WRITTEN AUTHORIZATION.

PREPARED FOR:
SHOPS AT MCLAUGHLIN II LLC
ATTN: OWNER
3902 MAIZELAND RD
COLORADO SPRINGS, CO 80909

Terra Nova Engineering, Inc.
"Creative Civil Engineering Solutions"
721 S. 23RD STREET
COLORADO SPRINGS, CO 80904
OFFICE: 719–635–6422
FAX: 719–635–6426
www.tnesinc.com

LOT 2 BECKETT AT WOODMEN HILLS FIL. NO. 3

GRADING & EROSION CONTROL PLAN
DETAILS

DESIGNED BY LD
DRAWN BY LD
CHECKED BY LD
H–SCALE N/A
V–SCALE N/A
JOB NO. 1729.00
DATE ISSUED 11/2/18
SHEET NO. 3 OF 3

N:\jobs\1729.00\Drawings\CD\172900.GRDG.dwg, 11/6/2018 11:21:39 AM, DWG To PDF.pc3

OPERATION AND MAINTENANCE INSPECTION RECORD

Appendix C Inspection Checklist – Grading Erosion, and Stormwater Quality Controls

PEYTON, COLORADO

DATE/TIME:
INSPECTOR:
TYPE OF INSPECTION: Self-Monitoring_____ Initial _____ Compliance_____ Follow-Up_____ Reconnaissance_____ Complaint_____ Final____

SITE:	DATE OF PERMIT:
ADDRESS:	
CONTRACTOR: CONTACT: PHONE:	OWNER/OWNER'S REPRESENTATIVE: CONTACT: PHONE:
STAGE OF CONSTRUCTION: Initial BMP Installation/Prior to Construction_____ Clearing & Grubbing_____ Rough Grading_____ Finish Grading_____ Utility Construction_____ Building Construction_____ Final Stabilization_____	

OVERALL SITE INSPECTION	YES/NO/N.A.	REMARKS/ACTIONS
Is there any evidence of sediment leaving the construction site? If so, note areas.		
Have any adverse impacts such as flooding, structural damage, erosion, spillage, or accumulation of sediment, debris or litter occurred on or within public or private property, wetlands or surface waters –to include intermittent drainageways and the City's stormwater system (storm sewers, gutters, ditches, etc.)?		
Are the BMPs properly installed and maintained?		
Have the BMPs been placed as shown on approved plans?		
Are the BMPs functioning as intended?		
Is work being done according to approved plans and any phased construction schedule?		
Is the construction schedule on track?		
Are drainage channels and outlets adequately stabilized?		
Is there any evidence of discharges or spills of fuels, lubricants, chemicals, etc.?		

BMP MAINTENANCE CHECKLIST	YES/NO/N.A.	REMARKS/ACTIONS NECESSARY
CHECK DAM Has accumulated sediment and debris been removed per maintenance requirements?		
EROSION CONTROL BLANKET Is fabric damaged, loose or in need of repairs?		
INLET PROTECTION Is the inlet protection damaged, ineffective or in need of repairs? Has sediment been removed per maintenance requirements?		
MULCHING Distributed uniformly on all disturbed areas? Is the application rate adequate? Any evidence of mulch being blown or washed away? Has the mulched area been seeded, if necessary?		
SEDIMENT BASIN Is the sediment basin properly constructed and operational? Has sediment and debris been cleaned out of the basin?		
SILT FENCE Is the fence damaged, collapsed, unentrenched or ineffective? Has sediment been removed per maintenance requirements? Is the silt fence properly located?		
SLOPE DRAIN Is water bypassing or undercutting the inlet or pipe? Is erosion occurring at the outlet of the pipe?		
STRAW BALE BARRIER Are the straw bales damaged, ineffective or unentrenched? Has sediment been removed per maintenance requirements? Are the bales installed and positioned correctly?		

BMP MAINTENANCE CHECKLIST	YES/NO/N.A.	REMARKS/ACTIONS NECESSARY
SURFACE ROUGHENING Is the roughening consistent/uniform on slopes?? Any evidence of erosion?		
TEMPORARY SEEDING Are the seedbeds protected by mulch? Has any erosion occurred in the seeded area? Any evidence of vehicle tracking on seeded areas?		
TEMPORARY SWALES Has any sediment or debris been deposited within the swales? Have the slopes of the swale eroded or has damage occurred to the lining? Are the swales properly located?		
VEHICLE TRACKING Is gravel surface clogged with mud or sediment? Is the gravel surface sinking into the ground? Has sediment been tracked onto any roads and has it been cleaned up? Is inlet protection placed around curb inlets near construction entrance?		
OTHER		

FINAL INSPECTION CHECKLIST	YES/NO/N.A.	REMARKS/ACTIONS NECESSARY
Has all grading been completed in compliance with the approved Plan, and all stabilization completed, including vegetation, retaining walls or other approved measures?		
Has final stabilization been achieved – uniform vegetative cover with a density of at least 70 percent of pre-disturbance levels, and cover capable of adequately controlling soil erosion; or permanent, physical erosion methods?		
Have all temporary measures been removed?		
Have all stockpiles, construction materials and construction equipment been removed?		
Are all paved surfaces clean (on-site and off-site)?		
Has sediment and debris been removed from drainage facilities (on-site and off-site) and other off-site property, including proper restoration of any damaged property?		
Have all permanent stormwater quality BMPs been installed and completed?		

ADDITIONAL COMMENTS:

The items noted as needing action must be remedied no later than _____.
The contractor shall notify the inspector when all the items noted above have been addressed.

By signing this inspection form, the owner/owner's representative and the contractor acknowledge that they have received a copy of the inspection report and are aware it is their responsibility to take corrective actions by the date noted above. Failure to sign does not relieve the contractor and owner/owner's representative of their responsibility to take the necessary corrective action and of their liability for any damages that have occurred or may occur.

INSPECTOR'S SIGNATURE:	DATE:
OWNER/OWNER'S REPRESENTATIVE SIGNATURE:	DATE:
CONTRACTOR'S SIGNATURE:	DATE: