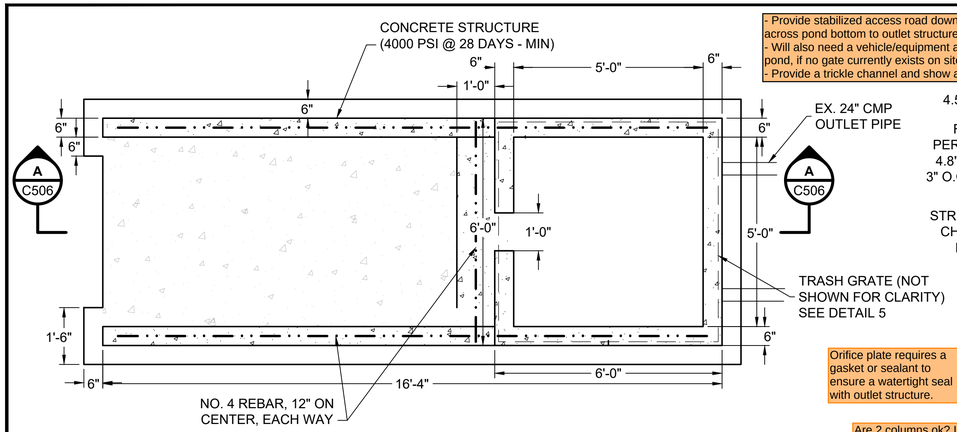

OUTLET STRUCTURE PLAN — 1 / C506
NOT TO SCALE

- Provide stabilized access road down pond embankment and across pond bottom to outlet structure.
- Will also need a vehicle/equipment access gate to get to the pond, if no gate currently exists on site or in proposed plans.
- Provide a trickle channel and show a section on this plan.

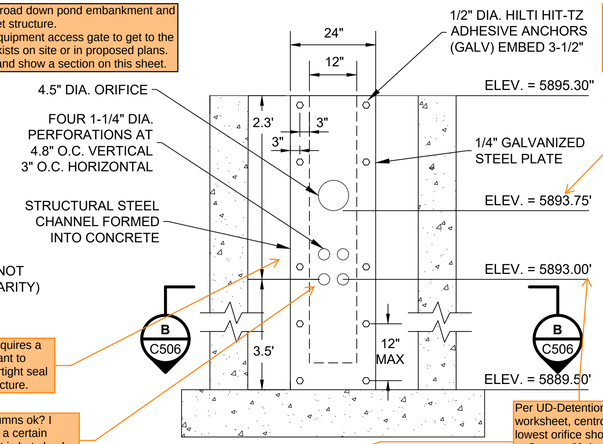

Per UD-Detention worksheet, invert of this orifice should be at Stage = 0.75ft, which is 5892.75ft. Revise.

Orifice plate requires a gasket or sealant to ensure a watertight seal with outlet structure.

Are 2 columns ok? I think over a certain diameter it is but check MHFD req's.

Per UD-Detention worksheet, centroid of lowest orifice should be at Stage = 0ft (top of micropool), which is 5892.0ft. Revise.

STEEL PERFORATED FLOW CONTROL PLATE DETAIL — 2 / C506
NOT TO SCALE

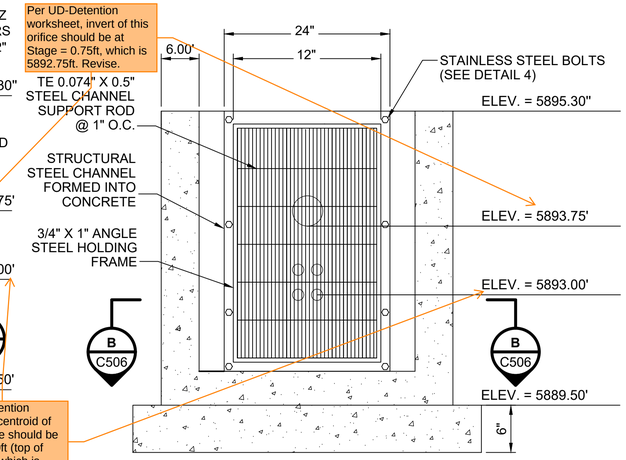

WELL SCREEN TRASH RACK DETAIL — 3 / C506
NOT TO SCALE

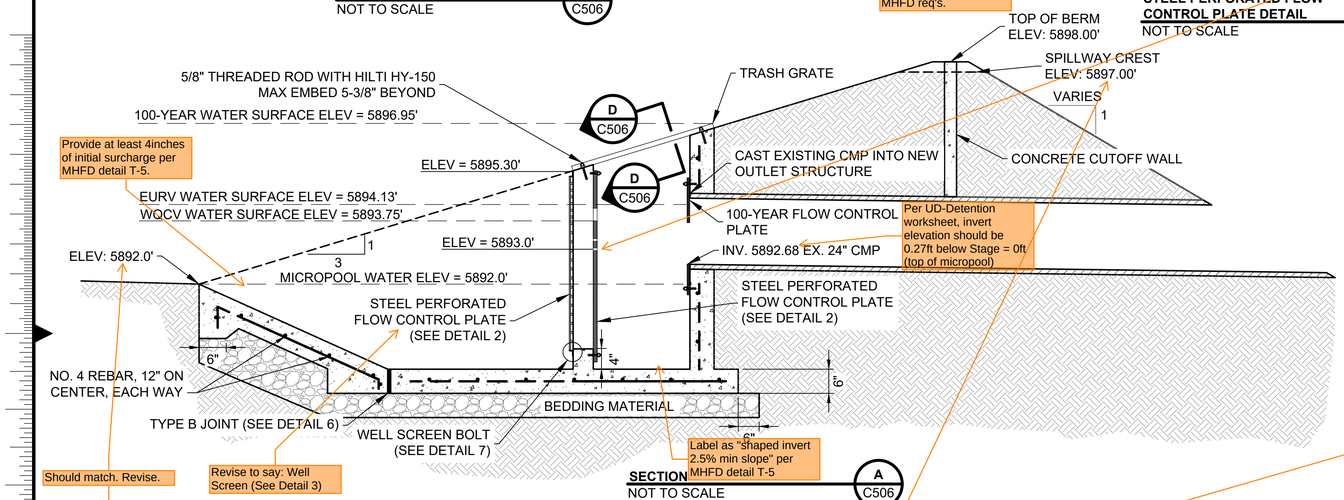

Provide at least 4inches of initial surcharge per MHFD detail T-5.

Per UD-Detention worksheet, invert elevation should be 0.27ft below Stage = 0ft (top of micropool)

Should match. Revise.

Revise to say: Well Screen (See Detail 3)

Label as "shaped invert 2.5% min slope" per MHFD detail T-5

SECTION — A / C506
NOT TO SCALE

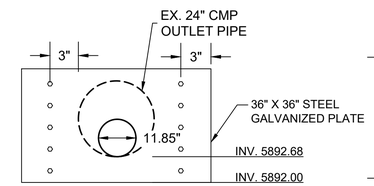

100-YEAR FLOW CONTROL PLATE — 4 / C506
NOT TO SCALE

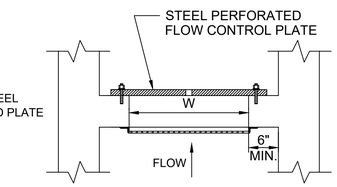

SECTION — B / C506
NOT TO SCALE

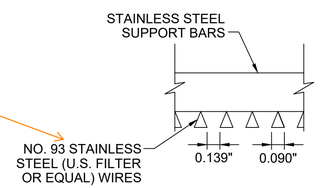

No, 93 Johnson Vee Wire Stainless Steel Well Screen (or equivalent)

Two Section B's. Revise.

SECTION — B / C506
NOT TO SCALE

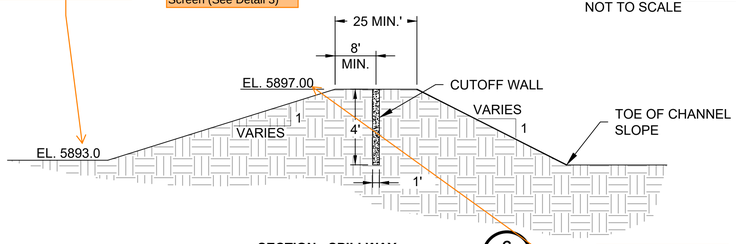

SECTION - SPILLWAY — C / C506
NOT TO SCALE

Per UD-Detention worksheet, spillway invert should be at Stage = 4ft, which is 5896.0ft. Revise.

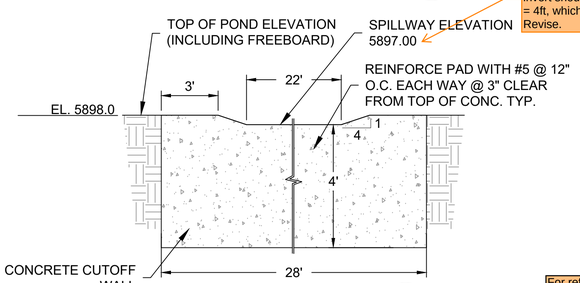

SECTION - SPILLWAY — E / C506
NOT TO SCALE

For reference:
UD-Detention worksheet is located on FDR page 240 of 251 of PPR2044

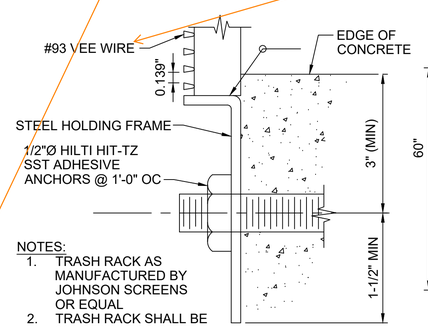

NOTES:
1. TRASH RACK AS MANUFACTURED BY JOHNSON SCREENS OR EQUAL
2. TRASH RACK SHALL BE 304 STAINLESS STEEL

WELL SCREEN BOTL DETAIL — 7 / C506
NOT TO SCALE

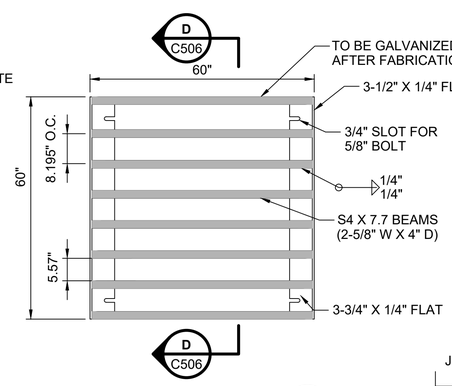

BAR TRASH RACK SECTION — 5 / C506
NOT TO SCALE

NOTES:
1. WELL-SCREEN TRASH RACKS SHALL BE STAINLESS STEEL AND SHALL BE ATTACHED BY STAINLESS STEEL BOLTS ALONG THE EDGE OF THE MOUNTING FRAME.
2. BAR GRATE TRASH RACKS SHALL BE GALVANIZED AND SHALL BE BOLTED USING STAINLESS STEEL HARDWARE.
3. TRASH RACK WIDTHS ARE FOR SPECIFIED TRASH RACK MATERIAL. FINER WELL-SCREEN OR MESH SIZE THAN SPECIFIED IS ACCEPTABLE, HOWEVER, TRASH RACK DIMENSIONS NEED TO BE ADJUSTED FOR MATERIALS HAVING A DIFFERENT OPEN AREA/GROSS AREA RATIO (R VALUE).
4. STRUCTURAL DESIGN OF TRASH RACK SHALL BE BASED ON FULL HYDROSTATIC HEAD WITH ZERO HEAD DOWNSTREAM OF THE RACK.
5. CONCRETE CUT OFF WALL SHALL BE INSTALLED UPSTREAM OF THE SPILLWAY. CUTOFF WALLS SHALL EXTEND A MINIMUM OF 5' PAST THE OPENING OF THE TOP OF THE SPILLWAY ON EACH SIDE OF THE SPILLWAY. CUTOFF WALLS SHALL BE A MINIMUM OF 8" THICK AND MINIMUM 3' DEEP. WALLS SHALL USE 3000 PSI CONCRETE.

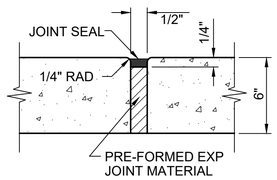

TYPE B JOINT — 6 / C506
NOT TO SCALE

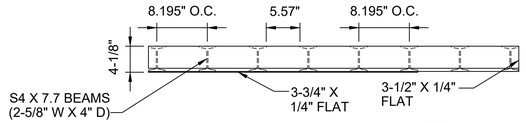

SECTION — D / C506
NOT TO SCALE

PCD FILING NO: PPR-20-044

no.	date	by	ckd	description
0	10/2/20	MJL	NT	ISSUED FOR PERMIT REVIEW
1	11/13/20	MJL	NT	ISSUED FOR EL PASO COUNTY PERMIT REVIEW
2	12/11/20	MJL	NT	REISSUED FOR EL PASO COUNTY PERMIT REVIEW
3	12/22/20	MJL	NT	REISSUED FOR EL PASO COUNTY PERMIT REVIEW

PRELIMINARY - NOT FOR CONSTRUCTION

BURNS McDONNELL
9785 Maroon Cir., Suite 400
Centennial, CO 80112
303-721-9292

date	detailed
DECEMBER 2020	M. LIESENDAHL
designed	**checked**
M. LIESENDAHL	N. TESSITORE

CHEROKEE METROPOLITAN DISTRICT

CHEROKEE METROPOLITAN DISTRICT
TDS REDUCTION FACILITY
CIVIL DETAILS VI

project	contract
119461	

drawing **C506** — rev. **3**

sheet 48 of sheets

file 119461_C506.DWG

COPYRIGHT © BURNS & McDONNELL ENGINEERING COMPANY, INC.