Luminaire Schedule				
Symbol	Tag	Qty	Description	Lum. Watts
▯	D	10	IST-AF-1000-LED-E1-T4FT-7030	54.6
⊙	C	4	RL641-1100L-DIM10-MVOLT	14.8
▯▢	FF	5	TFX2 LED 40K Mvolt	93.1

Calculation Summary							
Label	CalcType	Units	Avg	Max	Min	Avg/Min	Max/Min
20-ft from PL	Illuminance	Fc	0.03	0.09	0.00	N.A.	N.A.
Property Line	Illuminance	Fc	0.11	0.5	0.0	N.A.	N.A.
Site	Illuminance	Fc	3.34	14.7	0.1	33.40	147.00

Include the following note related to TFX LED floodlights: Upward lighting for architectural, landscape or decorative purposes shall have at least 90% of the total distribution pattern within the profile of the illuminated structure or feature.

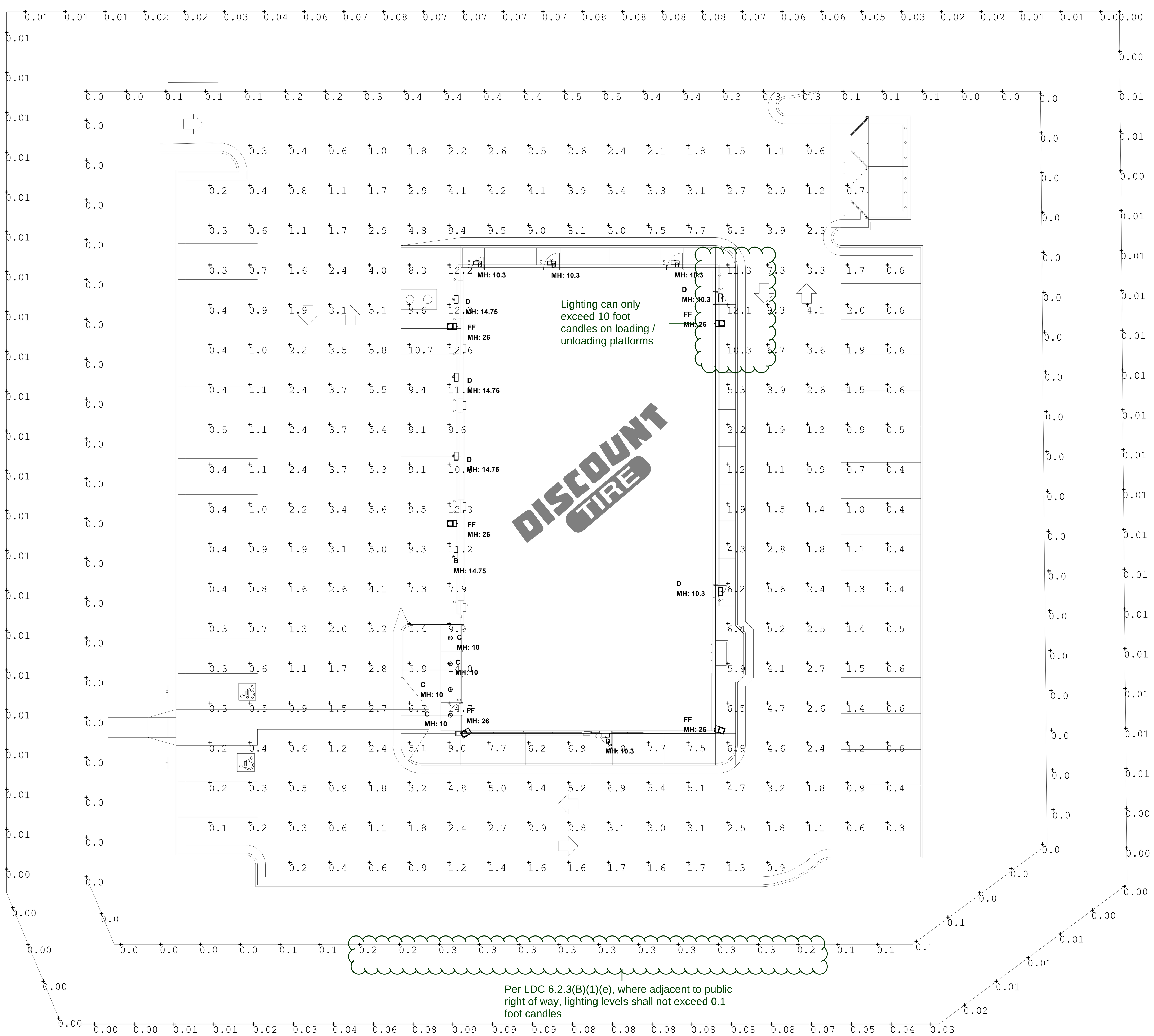

McGraw-Edison

Catalog #		Type
Project		
Comments		Date
Prepared by		

DESCRIPTION

The Impact Elite family of wall luminaires is the ideal complement to site design. Incorporating modular LightSquares technology, the Impact Elite luminaire provides outstanding uniformity and energy-conscious illumination. Combined with a rugged construction, the Impact Elite luminaire is the ideal facade and security luminaire for zones surrounding schools, office complexes, apartments and recreational facilities. UL/cUL listed for wet locations.

SPECIFICATION FEATURES

Construction
Heavy-wall, die-cast aluminum housing and removable hinged door frame for precise tolerance control and repeatability. Hinged door inset for clean mating with housing surface and secured via two captive fasteners. Optional tamper-resistant Torx™ head fasteners offer vandal resistant access to the electrical chamber.

Optics
Choice of 10 patented, high-efficiency AccuLED Optics™ distributions. Optics are precisely designed to shape the light output, maximizing efficiency and application spacing. AccuLED Optics technology creates consistent distributions with the scalability to meet customized application requirements. Offered Standard in 4000K (+/- 275K) CCT and minimum 70 CRI. Optional 3000K, 5000K and 5700K CCT.

Electrical
LED drivers mount to die-cast aluminum back housing for optimal heat sinking, operation efficacy, and prolonged life. Standard drivers feature electronic universal voltage (120-277V 50/60Hz), 347V 60Hz or 480V 60Hz operation, greater than 0.9 power factor, less than 20% harmonic distortion, and are suitable for operation in -40°C to 40°C ambient environments. All fixtures are shipped standard with 10kV/10kA common – and differential – mode surge protection. LightSquares feature an IP66 enclosure rating and maintain greater than 90% lumen maintenance at 60,000 hours per IESNA TM-21. Emergency egress options for -20°C ambient environments and occupancy sensor available.

Mounting
Gasketed and zinc plated rigid steel mounting attachment fits directly to 4" j-box or wall with the Impact Elite "Hook-N-Lock" mechanism for quick installation. Secured with two captive corrosion resistant black oxide coated allen head set screws concealed but accessible from bottom of fixture.

Finish
Cast components finished in a five-stage super TGIC polyester powder coat paint, 2.5 mil nominal thickness for superior protection against fade and wear. Standard colors include black, bronze, grey, white, dark platinum and graphite metallic. RAL and custom color matches available. Consult the McGraw-Edison Architectural Colors brochure for the complete selection.

Warranty
Five-year warranty.

ISC/ISS/IST/ISW
IMPACT ELITE LED

1 LightSquare
Solid State LED

WALL MOUNT LUMINAIRE

DIMENSIONS

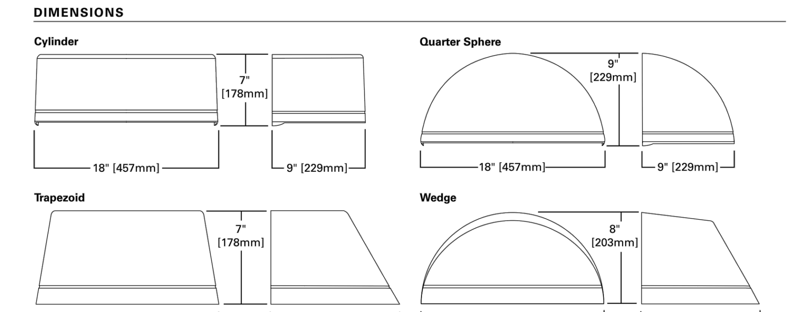

HOOK-N-LOCK MOUNTING

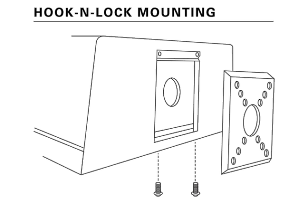

CERTIFICATION DATA
UL/cUL Listed
LM79 / LM80 Compliant
IP66 LightSquare
DesignLights Consortium® Qualified*
ISO 9001

ENERGY DATA
Electronic LED Driver
>0.9 Power Factor
<20% Total Harmonic Distortion
120-277V/50 & 60Hz, 347V/60Hz, 480V/60Hz
-40°C Minimum Temperature
40°C Ambient Temperature Rating

SHIPPING DATA
Approximate Net Weight:
18 lbs. (8 kgs.)

*www.designlights.org

COOPER Lighting Solutions

TD514030EN
October 19, 2020 11:52 AM

KAD LED
LED Area Luminaire

Catalog Number	
Notes	
Type	

Hit the Tab key or mouse over the page to see all interactive elements.

Specifications

EPA:	1.2 ft² (0.11 m²)
Length:	17-1/2" (44.5 cm)
Width:	17-1/2" (44.5 cm)
Height:	7-1/8" (18.1 cm)
Weight (max):	36 lbs. (16.4 kg)

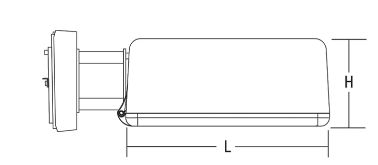

A+ Capable Luminaire

This item is an A+ capable luminaire, which has been designed and tested to provide consistent color appearance and system-level interoperability.

- All configurations of this luminaire meet the Acuity Brands' specification for chromatic consistency
- This luminaire is A+ Certified when ordered with DTL® controls marked by a shaded background. DTL DLL equipped luminaires meet the A+ specification for luminaire to photocontrol interoperability1
- This luminaire is part of an A+ Certified solution for ROAM®2 or XPoint™ Wireless control networks, providing out-of-the-box control compatibility with simple commissioning, when ordered with drivers and control options marked by a shaded background[1]

To learn more about A+, visit www.acuitybrands.com/aplus.

1. See ordering tree for details.
2. A+ Certified Solutions for ROAM require the order of one ROAM node per luminaire. Sold Separately: Link to Roam; Link to DTL DLL

A+ Capable options indicated by this color background.

Ordering Information **EXAMPLE:** KAD LED 40C 1000 40K R5 MVOLT SPD04 DDBXD

Series	LEDs	Drive current	CCT	Distribution	Voltage	Mounting[1]
KAD LED	20C[1] 20 LEDs; 30C[1] 30 LEDs; 40C 40 LEDs; 60C 60 LEDs	530 530 mA[1]; 700 700 mA; 1000 1000 mA	30K 3000 K; 40K 4000 K; 50K 5000 K	R2 Type II; R3 Type III; R4 Type IV; R5 Type V[2]	MVOLT[3]; 120[4]; 208[4,5]; 240[4,5]; 277[4]; 347[1,3]; 480[1,3]	Shipped included: SPUMBAK__ Square pole universal mounting adaptor[6]; RPUMBAK__ Round pole universal mounting adaptor[6]; SPD__ Square pole; RPD__ Round pole; WBD__ Wall bracket[2]; WWD__ Wood pole or wall; 04 4" arm; 06 6" arm; 09 9" arm[5]; 12 12" arm[6]. Shipped separately: DAD12P Degree arm (pole); DAD12WB Degree arm (wall); KMA Mast arm external fitter

Options				Finish (required)
Shipped installed: PER5 NEMA twist-lock five-wire receptacle only (no controls)[7,8,9]; PER7 Seven-wire receptacle only (no controls)[7,8,9]; SF Single fuse (120, 277, 347V)[4]; DF Double fuse (208, 240, 480V)[4]; PIR Bi-level, motion/ambient sensor, 8-15' mounting height, ambient sensor enabled at 5fc[3,10,11,12,13]; PIRH Bi-level, motion/ambient sensor, 15-30' mounting height, ambient sensor enabled at 5fc[3,10,11,12,13]	PIR1FC3V Bi-level, motion/ambient sensor, 8-15' mounting height, ambient sensor enabled at 1fc[3,10,11,12,13]; PIRH1FC3V Bi-level, motion/ambient sensor, 15-30' mounting height, ambient sensor enabled at 1fc[3,10,11,12,13]; BL30 Bi-level switched dimming, 30%[3,9,10,11]; BL50 Bi-level switched dimming, 50%[3,9,10,11]	PNMTDD3 Part night, dim till dawn[3,11,16]; PNMT5D3 Part night, dim 5 hrs[3,11,16]; PNMT6D3 Part night, dim 6 hrs[3,11,16]; PNMT7D3 Part night, dim 7 hrs[3,11,16]; HS Houseside shield[17]	Shipped separately[17]: WG Wire guard	DDBXD Dark bronze; DBLXD Black; DNAXD Natural aluminum; DWHXD White; DDBTXD Textured dark bronze; DBLBXD Textured black; DNATXD Textured natural aluminum; DWHGXD Textured white

LITHONIA LIGHTING. COMMERCIAL OUTDOOR

One Lithonia Way • Conyers, Georgia 30012 • Phone: 800-705-SERV (7378) • www.lithonia.com
© 2012-2020 Acuity Brands Lighting, Inc. All rights reserved.

KAD-LED
Rev. 10/21/20

CS CONTRACTOR SELECT™ — LITHONIA LIGHTING.

Catalog Number	
Notes	
Type	

Contractor Select™
TFX LED
Floodlights

The TFX LED floodlights from Lithonia Lighting deliver the best value in lighting, from a brand you can trust. Superior performance and design make this product suitable for any general purpose floodlighting application.

FEATURES:
- Ideal solution to replace up to 1000W metal halide floodlights
- Floodlight pays for itself in less than 2 years
- Robust design and cost effective – ideal for outdoor installations

Luminaire	CCT	Lumens	Input Watts	Finish	Voltage	Catalog Number	CI Code	UPC	Pallet qty.	Replaces Up To
TFX1	4000K	7,300	54W	DARK BRONZE	120-277V	TFX1 LED 40K MVOLT THK DDBXD M6	*2552M5	193047670173	180	175W Metal Halide
	5000K	7,300	54W	DARK BRONZE	120-277V	TFX1 LED 50K MVOLT YK DDBXD M6	*2581FF	193048041514	180	175W Metal Halide
	4000K	7,300	54W	WHITE	120-277V	TFX1 LED 40K MVOLT THK DWHXD M6	*2552M7	193047670197	180	175W Metal Halide
TFX2	4000K	13,200	94W	DARK BRONZE	120-277V	TFX2 LED 40K MVOLT IS DDBXD	*2552MC	193047670241	45	250W Metal Halide
	4000K	13,200	94W	DARK BRONZE	120-277V	TFX2 LED 40K MVOLT YK DDBXD	*2552ME	193047670234	63	250W Metal Halide
	5000K	13,200	94W	DARK BRONZE	120-277V	TFX2 LED 50K MVOLT IS DDBXD	*2581FG	193048041545	45	250W Metal Halide
	5000K	13,200	94W	DARK BRONZE	120-277V	TFX2 LED 50K MVOLT YK DDBXD	*2581FK	193048041552	63	250W Metal Halide
TFX3	4000K	25,600	188W	DARK BRONZE	120-277V	TFX3 LED 40K MVOLT IS DDBXD	*2552MF	193047670265	24	400W Metal Halide
	4000K	25,600	188W	DARK BRONZE	120-277V	TFX3 LED 40K MVOLT YK DDBXD	*255MJ	193047670258	36	400W Metal Halide
TFX4	4000K	41,000	296W	DARK BRONZE	120-277V	TFX4 LED 40K MVOLT IS DDBXD	*2552MM	193047670302	12	1000W Metal Halide
	4000K	41,000	296W	DARK BRONZE	120-277V	TFX4 LED 40K MVOLT YK DDBXD	*2552MN	193047670326	12	1000W Metal Halide

More configurations are available. Click here or visit www.acuitybrands.com and search for TFX LED.

Accessories: Order as separate catalog number.
Click here to visit Accessories.

CONTRACTOR SELECT TFX SERIES LED

RL641
6" LED RETROFIT BAFFLE LIGHTING MODULE WITH JUNCTION BOX

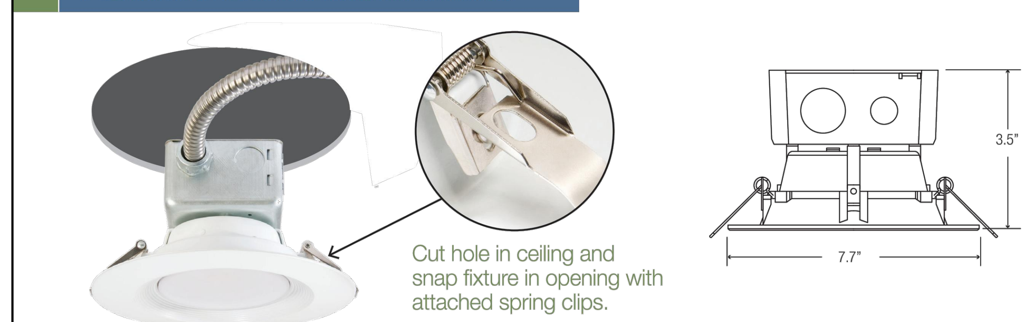

Example: **RL641-1150L-DIM10-MVOLT-35K-90-W-WH**

TYPE	PERFORMANCE	CCT	CRI	FINISH	REFLECTOR TRIM (RT)	HOUSING OPTION
RL641 (Baffle)	❑ 1150L-DIM10-MVOLT	❑ 30K ❑ 35K ❑ 40K ❑ 50K	❑ 90+	❑ W-WH	❑ RL641-RT-CL-WH ❑ RL641-RT-SHZ-WH	❑ BHHR6PL

AVAILABLE TRIM OPTION INSERTS — **FRAME FOR NEW CONSTRUCTION**

LED 6"

RL641-1150L-DIM10-MVOLT TEST NO.: **EL-113916**
INPUT WATTS: **14.8** LUMENS: **1128** CRI: **90+** EFFICACY: **76** CCT: **3000K** SPACING CRITERIA: **1.16**

Candle Power Distribution (Candelas)

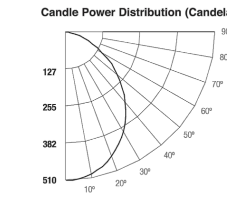

Zonal Lumens Summary

Zone	Lumens	%Lamp	%Fixt
0-20	181.06	16.00	16.00
0-30	374.74	33.20	33.20
0-40	594.41	52.70	52.60
0-60	970.56	86.00	85.90
0-80	1117.24	99.00	98.90
0-90	1129.41	100.00	100.00

Luminance (Average candela/M²)

Angle in Degrees	Average 0°	Average 45°	Average 90°
45	21160	21498	22000
55	18053	18428	19467
65	12707	14389	15415
75	7019	8409	12237
85	2778	7918	12889

Lumens Per Zone

Zone	Lumens
0-10	47.75
10-20	133.31
20-30	193.68
30-40	219.67
40-50	208.77
50-60	167.38
60-70	102.98
70-80	43.71
80-90	12.17

Candela Tabulation

	0
0	509.62
5	506.59
15	478.23
25	425.93
35	356.01
45	273.19
55	189.06
65	98.05
75	33.17
85	4.42
90	0.41

Cone of Light

Distance to Plane	Initial Footcandle at Nadir	Beam diameter
4.0	31.9	8.6'
8.0	7.96	17.2'
12.0	3.54	25.8'
16.0	1.99	34.4'
20.0	1.27	43.0'

BEAM DIA. MEASURED AT 50% OF NADIR F.C.

Coefficients of Utilization - Zonal Cavity Method
Effective Floor Cavity Reflectance 0.20

RC	80%				70%				50%			30%			10%			0%
RW	70%	50%	30%	10%	70%	50%	30%	10%	50%	30%	10%	50%	30%	10%	50%	30%	10%	0%
0	119	119	119	119	116	116	116	116	111	111	111	106	106	106	102	102	102	100
1	110	106	102	99	107	104	100	97	99	97	94	96	93	91	92	90	88	86
2	101	94	87	82	99	92	86	81	88	84	79	85	81	78	82	79	76	74
3	93	83	76	70	90	82	75	69	79	73	68	76	71	67	74	69	66	64
4	86	74	66	60	83	73	65	60	71	64	59	68	63	58	66	61	57	55
5	79	67	59	52	77	66	58	52	64	57	51	62	56	51	60	55	50	48
6	73	61	52	46	71	60	52	46	58	51	46	56	50	45	55	49	45	43
7	68	55	47	41	66	54	47	41	53	46	41	52	45	40	50	45	40	38
8	64	51	43	37	62	50	42	37	49	42	37	47	41	36	46	41	36	34
9	60	47	39	33	58	46	39	33	45	38	33	44	38	33	43	37	33	31
10	56	43	36	31	55	43	35	30	42	35	30	41	35	30	40	34	30	28

ROOM CAVITY RATIO — RC - Ceiling Cavity Reflectance; RW - Wall Reflectance

6 INCH LED RETROFIT MODULE

elite LED LIGHTING

Due to the changes of constant improvement in LED technology, all details are subject to change without notice. Consult factory for up to date information.

DISCOUNT® TIRE

THIS PLAN IS PROPERTY OF KINETIC DESIGN. THIS DRAWING IS LOANED WITHOUT OTHER CONSIDERATION THAN THE AGREEMENT AND CONDITION THAT IT IS NOT BE REPRODUCED, COPIED, OR OTHERWISE DISPOSED OF, DIRECTLY OR INDIRECTLY, AND IS NOT TO BE USED IN WHOLE OR IN PART TO ASSIST IN MAKING OR TO FURNISH ANY INFORMATION FOR THE MAKING OF DRAWINGS, PRINTS, APPARATUS OR PARTS THEREOF. THE ACCEPTANCE OF THIS DRAWING WILL BE CONSTRUED AS AN ACCEPTANCE OF THE FOREGOING CONDITIONS.

SITE PHOTOMETRICS

7585 FALCON MARKETPLACE COLORADO

KD Kinetic Design
Kinetic Design
20381 Lake Forest Dr.,
Suite B16
Lake Forest, CA 92630
951-710-6334 (T)

BUILDING MODEL	NEW FRAME
REVISION	-
DATE	02.11.2021
SCALE	AS NOTED
PROJECT NUMBER	KSK -

Sheet No.
ES.1