PROJECT INFORMATION

AUTHORITY:
El Paso Counties District Health Department
Colorado Springs Office
1675 Garden of the Gods Rd. STE 2044, Colorado Springs, Co. 80907
719-578-3199

SITE:
This on-site wastewater treatment system was designed for:
Patrick Meade
17185 Sage Crest Rd
Peyton, Co 80831
Lot 62 Blue Sage Sub Fil No. 1

DESIGN DATA:
- 6 Bedrooms
- Design Required to be based on 2 people per bedroom or 12 people
- Average Daily Flow = 75 GPD / Person = 900gpd

SOILS SPECIFIC SITE INFORMATION:

- Site soils information provided by Las Animas-Huerfano Counties District Health Department
- 0" - 8" Sandy Loam
- 8" - 27" Sandy Clay Loam.
- 27" - 36" Sandy Loam
- 36" - 80" Loamy Coarse Sand

SCOPE OF WORK:

- 1800 gallon septic tank, and 600 gallon pump tank.
- Mounded system, on top of fractured soil, use secondary sands

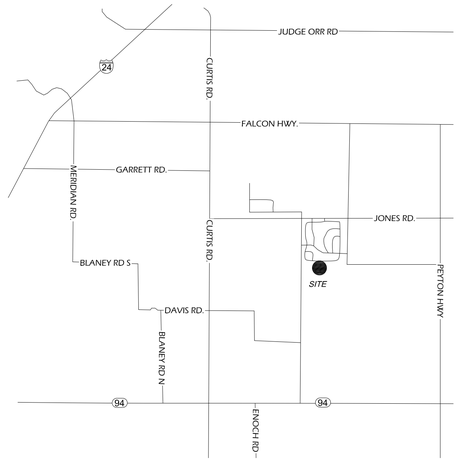

VICINITY MAP
NOT TO SCALE

SYSTEM INFORMATION (GRAVITY FLOW SYSTEM)

CALCULATIONS:

House - 4 Bedrooms
-Design Flow (Q) = 75 GPD/person x 12 people = 900 GPD

-Septic Tank
Tank shall have capacity to hold 48 hours of effluent or 900 x 2 = 1800 gallons. The minimum tank size for 6 bedroom residence is 1750 gallons, so therefore 1,800 gallon septic tank is required.

-Soil Treatment Area (STA) Size
A = 900 GPD = 1,500 SF
Soil Type 2 0.6GPD/SF
Trench Adj Factor *1.0 = 1,500
Chamber Adj Factor *.7 = 1,050 sf
No. of panels (12 SF each): 1,050SF / 12 SF/panel = 88 panels (4 Trenches of 22)

GENERAL NOTES

This design is in accordance with El Paso County Health Department Environmental Health Division and State of Colorado requirements. Installation, inspection and maintenance shall also be in accordance with these requirements and are the responsibility of others.

The guidelines, rules and regulations El Paso County Health Department Environmental Health Division and the Colorado Department of Health and Environment are hereby specified and made part of this design where applicable.

1. The Contractor is responsible for ensuring that the minimum distances below are maintained between the soil treatment area or septic tank and the physical features listed:

	Soil Treatment	Septic Tank
Springs, wells or suction lines	100'	50'
Potable water supply	25'	10'
Cistern	25'	25'
Dwelling or occupied building	20'	5'
Property Line	10'	10'
Subsoil drain	25'	10'
Lake, water course or stream	50'	50'
Dry gulches	25'	10'

2. Sewage pipe crossings or encroachments with water conveyance pipe is acceptable provided that the water conveyance pipe is encased for a minimum distance of ten (10) feet on each side of the crossing. Such length of pipe shall be used with a minimum Schedule 40 rating with sufficient diameter to easily slide over and completely encase the water conveyance. Ridged end caps of at least Schedule 40 rating shall be glued or secured in a watertight fashion to the ends of the encasement pipe. A hole of sufficient size to accommodate the pipe shall be drilled in the lower most section of the ridged end cap so that the conveyance pipe rests on the bottom of the encasement pipe. The area in which the pipe passes through the end caps shall be sealed with an underground sealant compatible with the piping used.

3. Sewer line from building to septic tank shall be laid on a grade of two (2) percent. Bends in the sewer line shall be limited to 22 degrees, 45 degrees or long sweep quarter bends.

4. This sewage disposal system is not designed to carry any loads applied by vehicles or equipment. Schedule 40 PVC pipe shall be installed where vehicles will cross any portion of the system. If necessary, provide a physical barrier around the absorption bed to protect it from vehicle or equipment traffic.

5. Schedule 40 pipe shall extend in to and out of the septic tank a minimum of 5'.

6. Design, fabrication and structural integrity of the septic tank is the responsibility of the tank manufacturer. Fiberglass, fiberglass-reinforced polyester, or plastic tank shall meet the minimum design and structural criteria of IAPMO/ANSI Z2000-2007 (American Standards for Fabricated Septic Tanks) and certified by a professional engineer as meeting these standards. The tank shall also meet requirements set forth in El Paso County Health Department Environmental Health Division On-site Waste Water Treatment Systems Regulations.

7. Final location of soil treatment area shall be confirmed in the field by the contractor and coordinated with the owner, El Paso County Health Department Environmental Health Division and Engineer prior to construction.

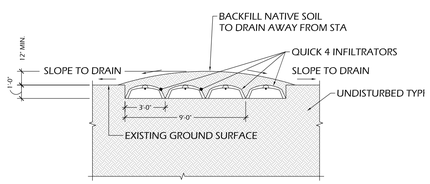

SECTION A-A
NTS

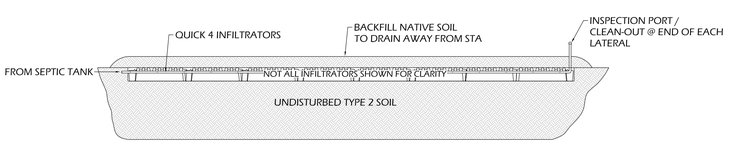

SECTION B-B
NTS

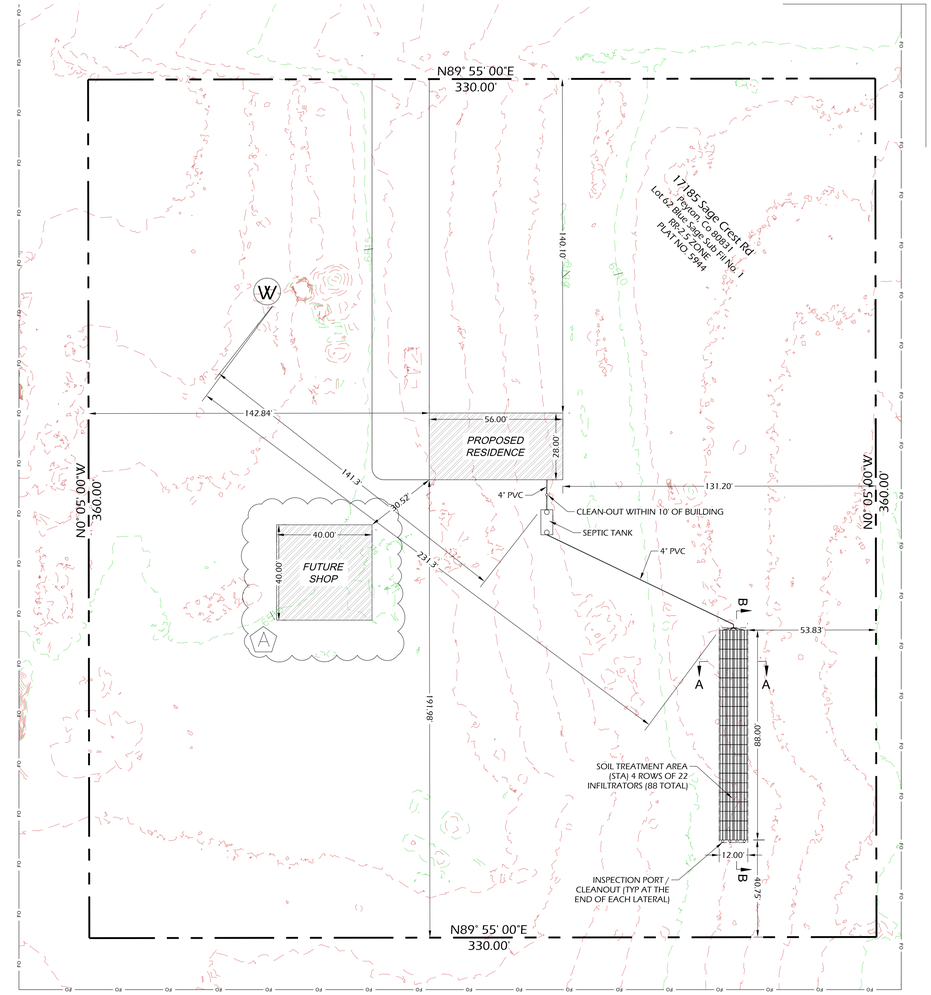

SITE PLAN
0 30 60
SCALE: 1"=30'

Released for Permit
03/16/2021 10:02:18 AM
CONDITIONAL
PER ENGINEER
RECORD DRAWING
CONSTRUCTION

DK Horn Engineering & Design Inc.
2441 S PRAIRIE AVE
PUEBLO, CO 81005
TEL 719.696.8274

COLORADO REGISTERED PROFESSIONAL ENGINEER
DANIEL RAY KOTTAS JR.
42686
2/17/2021
PROFESSIONAL ENGINEER

STAMP:

ONSITE WASTEWATER TREATMENT SYSTEM

17185 SAGE CREST RD
PEYTON, CO 80831

PROJECT NUMBER: 2020-051-A
DRAWN BY: AJM
REVIEWED BY: DKH
DATE: 2-12-2021

ISSUE RECORD:
A 3-01-2021 REVISED STAIR SECTION AS PER PPRBD COMMENTS

SITE PLAN
ONSITE
WASTEWATER
TREATMENT
SYSTEM

OWTS1

GENERAL NOTES:

1. COORDINATE ALL WORK WITH ENGINEERING DRAWINGS AND SPECIFICATIONS.
2. DO NOT SCALE DRAWINGS.
3. CONTRACTOR AND SUB-CONTRACTORS SHALL FAMILIARIZE THEMSELVES WITH EXISTING CONDITIONS, LOCATIONS, AND PROJECT REQUIREMENTS PRIOR TO SUBMITTING A BID.
4. CONTRACTOR AND SUB-CONTRACTORS SHALL FIELD VERIFY DIMENSIONS, AND FAMILIARIZE THEMSELVES WITH PROJECT REQUIREMENTS PRIOR TO COMMENCING WITH THE WORK. CONTRACTOR SHALL REPORT ANY DISCREPANCIES TO ENGINEER.
5. WORK SHALL INCLUDE ALL REQUIRED PERMITS, LABOR, MATERIALS, AND EQUIPMENT TO COMPLETE ALL WORK INDICATED ON DRAWINGS AND AS NECESSARY FOR A COMPLETE PROJECT.
6. PROVIDE TEMPORARY DUST-PROOF PARTITIONS AS REQUIRED TO PROTECT ALL EXIST. AREAS AND EQUIPMENT FROM DAMAGE DUE TO DEMOLITION OR NEW CONSTRUCTION ACTIVITIES. COORDINATE LOCATIONS AND REQUIREMENTS WITH OWNER.
7. GENERAL CONTRACTOR TO PATCH, REPAIR AND PAINT (REFINISH) SURFACES AND BUILDING ELEMENTS DAMAGED BY MECHANICAL, ELECTRICAL, AND PLUMBING WORK AND WHERE ITEMS ARE REMOVED, RELOCATED OR ADDED.
8. REPAIR FLOORS WHERE DAMAGED BY THE WORK OF THIS PROJECT.
9. PATCH AND REPAIR ALL SURFACES TO MATCH EXISTING WHERE ITEMS ARE REMOVED OR ALTERED - FIELD VERIFY EXTENT REQUIRED.
10. ALL PAINTING SHALL BE DONE IN ACCORDANCE WITH MANUFACTURER'S SPECIFICATIONS. CONTRACTOR IS RESPONSIBLE FOR PROTECTING ADJACENT FINISHES AND CLEANUP.
11. CONTRACTOR IS RESPONSIBLE FOR FINAL CLEANUP OF WORK AREA AND ALL EXPOSED BUILDING SURFACES AT SUBSTANTIAL COMPLETION.
12. ALL TRASH AND TOOLS SHALL BE REMOVED FROM PREMISES EACH DAY AND THE AREA LEFT CLEAN WHENEVER UNATTENDED. EACH CONTRACTOR SHALL BE RESPONSIBLE FOR CLEANUP. COORDINATE WITH OWNER IF SECURE STORAGE IS NEEDED ONSITE.
13. CONTRACTOR SHALL BE RESPONSIBLE FOR DAMAGE TO FINISHED SURFACES, EQUIPMENT, FURNITURE, EXISTING MATERIALS OR FINISHES, CAUSED AS A RESULT OF HIS WORK. REPAIR OR REPLACE DAMAGED ITEMS AS DIRECTED BY ENGINEER.
14. ALL WORK SHALL BE DONE IN ACCORDANCE WITH PUEBLO REGIONAL BUILDING DEPARTMENT, **IBC 2015** (INTERNATIONAL BUILDING CODE), **2015 IECC** (INTERNATIONAL ENERGY CODE), **2015 IPC** (INTERNATIONAL PLUMBING CODE), **2015 IMC** (INTERNATIONAL MECHANICAL CODE), **2015 IFGC** (INTERNATIONAL FUEL AND GAS CODE) AND **2017 NEC** (NATIONAL ELECTRICAL CODE)

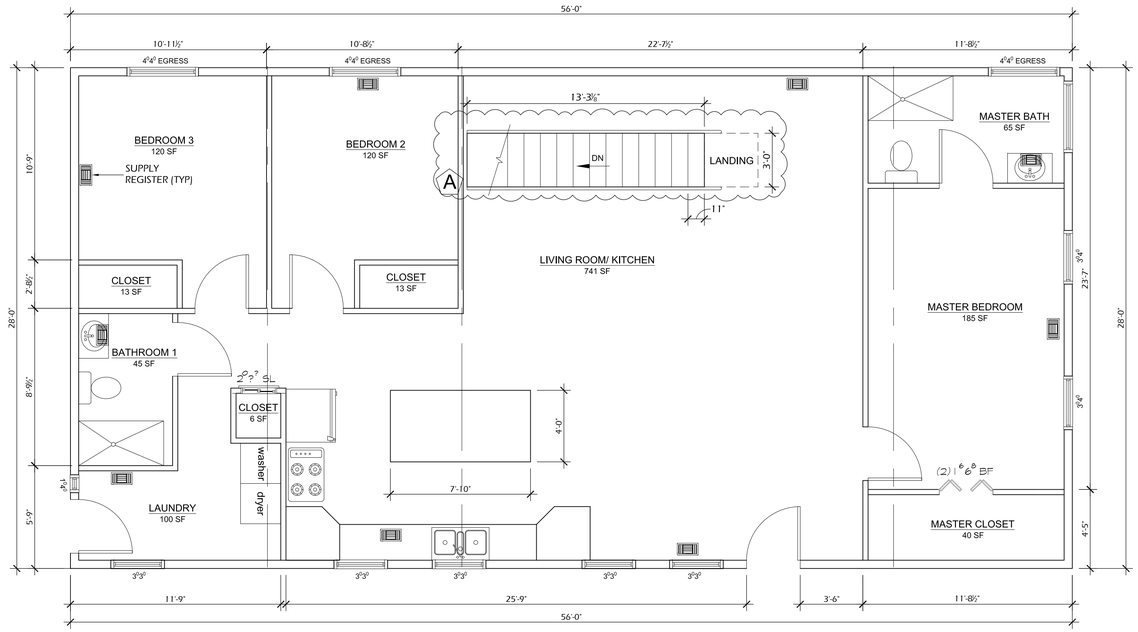

FLOOR PLAN
¼" = 1'-0"

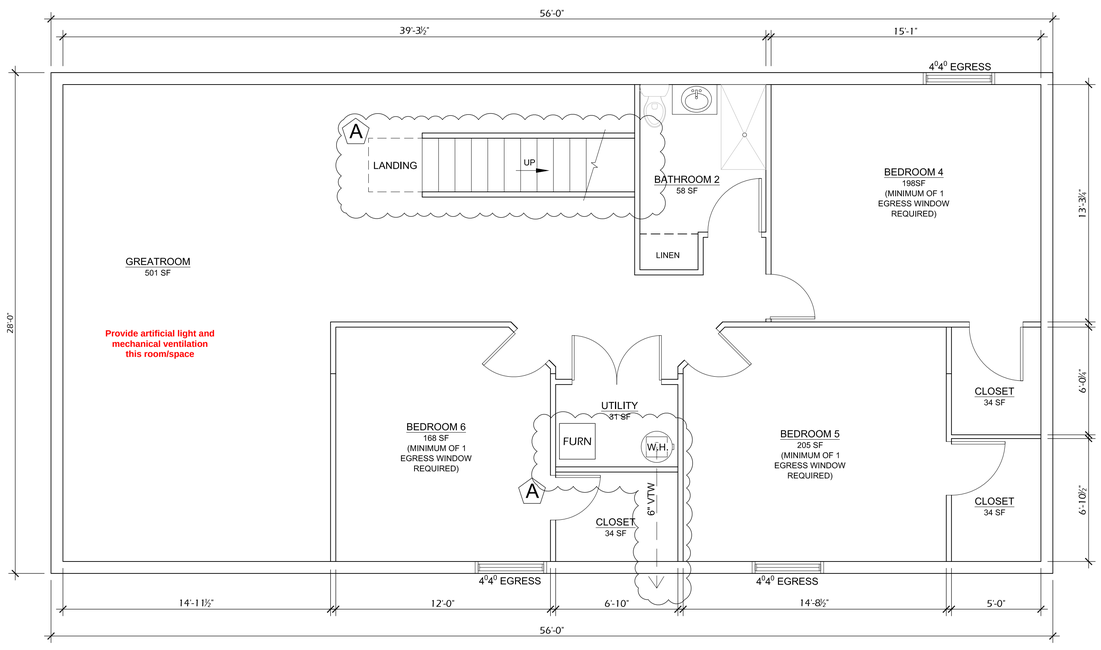

BASEMENT FLOOR PLAN
¼" = 1'-0"

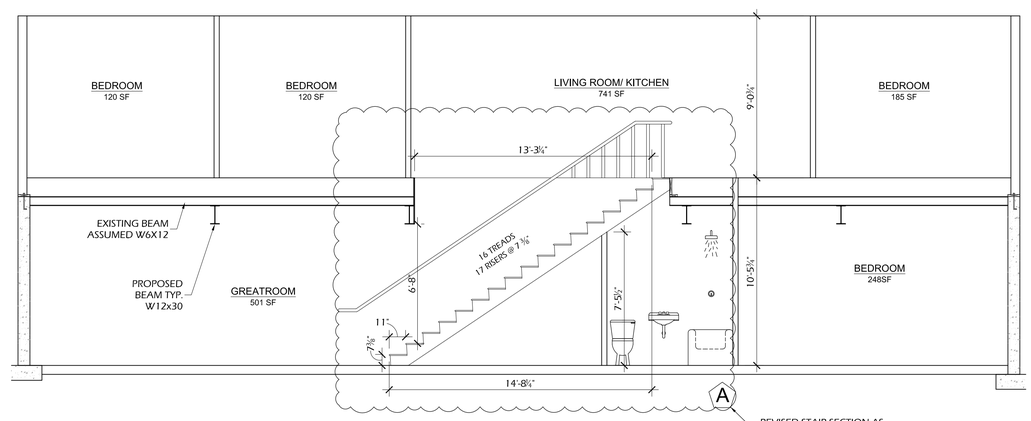

STAIR SECTION
¼" = 1'-0"

Released for Permit
03/16/2021 8:02:15 AM
Comm Dev
REGIONAL
Bldg Inspection
CONSTRUCTION

DKHorn Engineering & Design Inc.

1910 ASPEN CIRCLE
PUEBLO, CO 81006
TEL 719.696.8274
DARLENE@DKHENG.COM

STAMP:

MOBILE HOME BASEMENT

17185 SAGE CREST RD.
PEYTON, CO, 80831

PROJECT NUMBER: 2020-D051-A
DRAWN BY: SAT
REVIEWED BY: DKH
DATE: 06/03/2020

ISSUE RECORD:
A 3-6-2021 REVISED STAIR SECTION AS PER PPRBD COMMENTS

ARCHITECTURAL FLOOR PLANS

A1

GENERAL:

1. DESIGN BASED ON THE FOLLOWING:

   FROST DEPTH: 30 INCHES

   SNOW LOAD: 50 PSF
   WIND LOAD: 130 MPH

2. ALL CONSTRUCTION SHALL BE IN ACCORDANCE WITH THE INTERNATIONAL BUILDING CODE (IBC) 2015, LOCAL BUILDING AUTHORITY AND APPLICABLE REGULATORY AGENCIES.

3. CONTRACTOR SHALL VERIFY ALL DIMENSIONS WITH THE ARCHITECTURAL PLANS AS WELL AS CONDITIONS IN THE FIELD PRIOR TO COMMENCING WORK. ANY DISCREPANCIES SHALL BE REPORTED TO THE ENGINEER AND RESOLVED PRIOR TO COMMENCEMENT OF CONSTRUCTION.

4. CONTRACTOR SHALL ENSURE THAT ALL GRADE BEAMS EXTEND MINIMUM OF 30" BELOW FINISHED GRADE. CONTRACTOR SHALL VERIFY FROST DEPTH PRIOR TO START OF CONSTRUCTION.

5. SOILS: A SOILS REPORT WAS PREPARED BY AMERICAN GEOSERVICES ON MAY 30, 2020, PROJECT NO. 0224-CS20, WHICH RECOMMENDS A SHORT DRILLED PIER TYPE FOUNDATION WITH AT LEAST 7 FEET BELOW EXISTING GROUND. SHALLOW FOOTINGS CAN BE USED WITH MINIMUM DEPTH OF 3' EMBEDMENT: HOWEVER, SUBGRADE SHALL BE SURFICIALLY COMPACTED USING A VIBRATORY COMPACTOR TO ACHIEVE AT LEAST 95% OF ASTM D698 DRY DENSITY. A QUALIFIED REPRESENTATIVE FROM AMERICAL GEOSERVICES SHALL PERFORM COMPACTION TESTING AND GIVE APPROVAL PRIOR TO COMMENCEMENT OF FOUNDATION CONSTRUCTION. DESIGN MAXIMUM SOIL BEARING CAPACITY IS 1500 PSF.

6. REFER TO BUILDING PLANS FOR ALL BLOCKOUTS, WINDOW AND DOOR PLACEMENT.

CONCRETE & REINFORCING:

7. ALL CONCRETE OR SLABS THAT WILL RECEIVE VEHICULAR TRAFFIC SHALL BE 4000 PSI (STEMWALLS, CAISSONS, PADS, ETC. CAN BE 3000 PSI) COMPRESSIVE STRENGTH AT 28 DAYS WITH STONE AGGREGATE (UNLESS OTHERWISE NOTED) AND SHALL BE MIXED, PLACED AND CURED IN ACCORDANCE WITH ACI 318, LATEST EDITION.

7.1. PROVIDE CORNER BARS TO MATCH ALL HORIZONTAL REINFORCING.
7.2. PROVIDE (2) #5 BARS AROUND ALL OPENINGS IN CONCRETE AND EXTEND BARS 24" PAST EDGES OF OPENINGS.
7.3. NO SPLICES OF REINFORCEMENT SHALL BE MADE AND NO WELDING TO REINFORCING SHALL BE PERMITTED EXCEPT AS DETAILED OR PERMITTED BY FOUNDATION 10.4 BARS SHALL BE LAPPED A MINIMUM OF 50 DIAMETERS.
7.5. PROVIDE CHAIRS, STANDEES, ETC. AS NECESSARY TO KEEP REINFORCEMENT IN PLACE AS SHOWN ON DETAILS.
7.6. MINIMUM CONCRETE PROTECTION (COVER) OVER REINFORCEMENT: 3" OF CONCRETE WHERE PERMANENTLY EXPOSED TO EARTH, 2" OF CONCRETE WHERE EXPOSED TO WEATHER.
7.7. PROVIDE #3 DOWELS, AT EXTERIOR STEPS 2'-0" LONG @ 18" O.C. EXTERIOR SLABS SHALL HAVE #3 x 2'-0" @ 30" O.C.
7.8. PROVIDE (2) #5 BARS, ONE AT EACH FACE, WITH 2'-0" PROJECTION ON ALL SIDES OF ALL OPENINGS IN CONCRETE.
7.9 PROVIDE CONTROL JOINTS THAT ARE $\frac{1}{4}$" OF THE SLAB THICKNESS DEEP. SAWN OR FORMED CONTROL JOINTS IN SLABS ON GRADE SHALL BE MADE AS SOON AS POSSIBLE WITHOUT DAMAGE TO THE SURFACE BUT NOT LONGER THAN 48 HOURS AFTER POUR.

8. ANCHOR BOLTS SHALL BE MIN. 1/2" DIA. X 10" IN LENGTH. (MIN EMBED IN CONCRETE FOUNDATION 7", 2" IN SILL PLATE) MINIMUM SPACING IS 36" O.C. AND SHALL BE WITHIN 12" OF EACH END AT SILL PLATE JOINTS.

9. CONTRACTOR SHALL ENSURE THAT BACKFILL AND COMPACTION BE DONE IN 8" LIFTS AND COMPACTED TO 95% MODIFIED PROCTOR OR AS SPECIFIED GEOTECHNICAL REPORT.

10. BACKFILLING SHALL NOT BE DONE UNTIL FLOORS ARE INSTALLED.

11. CONTRACTOR SHALL ENSURE THAT FINISHED GRADE OF SURFACE HAS POSITIVE DRAINAGE AWAY FROM THE FOUNDATION (8" IN THE FIRST 10 FEET AS A MINIMUM) OR AS SPECIFIED IN THE GEOTECHNICAL REPORT.

WOOD:

12. FRAMING LUMBER SHALL BE (U.N.O.)
(A) STUDS.....HEM-FIR STUD GRADE
(B) HEADERS.....HEM-FIR #2
13. WOOD CONSTRUCTION SHALL BE IN CONFORMANCE WITH THE "NATIONAL DESIGN SPECIFICATION FOR STRESS GRADE LUMBER AND ITS FASTENINGS".
14. STAINLESS STEEL OR GALVANIZED CONNECTORS, FASTENERS AND ANCHORS SHALL BE USED WITH PRESERVATION WOODS.
15. PLYWOOD WEB JOISTS, VERSA LAM LVL (2.0E - NOTED V.L. ON PLANS), AND VERSA-STUD LVL (1.7E - NOTED V.S. ON PLANS) SHALL BE MANUFACTURED BY BOISE CASCADE, OR APPROVED EQUAL. BEAMS SHALL NOT BE MODIFIED WITHOUT WRITTEN CONSENT OF THE STRUCTURAL ENGINEER.
16. EXTERIOR WALLS SHALL BE CONSTRUCTED OF 5$\frac{1}{2}$" X 1$\frac{1}{2}$" V.S. @ 16" O.C. AND FULLY SHEATHED WITH $\frac{7}{16}$" ORIENTED STRAND BOARD (O.S.B.), OR APPROVED EQUAL.
17. ROOF TRUSSES SHALL BE DESIGNED BY A REGISTERED PROFESSIONAL ENGINEER LICENSED IN COLORADO. LIVE LOAD DEFLECTIONS SHALL NOT EXCEED $\frac{1}{240}$ OF THE SPAN. CALCULATIONS AND SHOP DRAWINGS BEARING THE SEAL AND SIGNATURE OF THE DESIGN ENGINEER SHALL BE REVIEWED BY THE STRUCTURAL ENGINEER PRIOR TO FABRICATION. SHOP DRAWINGS SHALL SHOW LOCATION OF ALL TRUSSES, CONNECTION PLATE CAPACITY, AND THE SIZE AND GRADE OF THE LUMBER USED. TRUSS MANUFACTURER SHALL PROVIDE BLOCKING AND BRIDGING AS REQUIRED FOR STABILITY, AND BEARING BLOCKS IF NEEDED. TRUSS SUPPLIER SHALL PROVIDE ALL HANGERS AND CONNECTORS NEEDED.

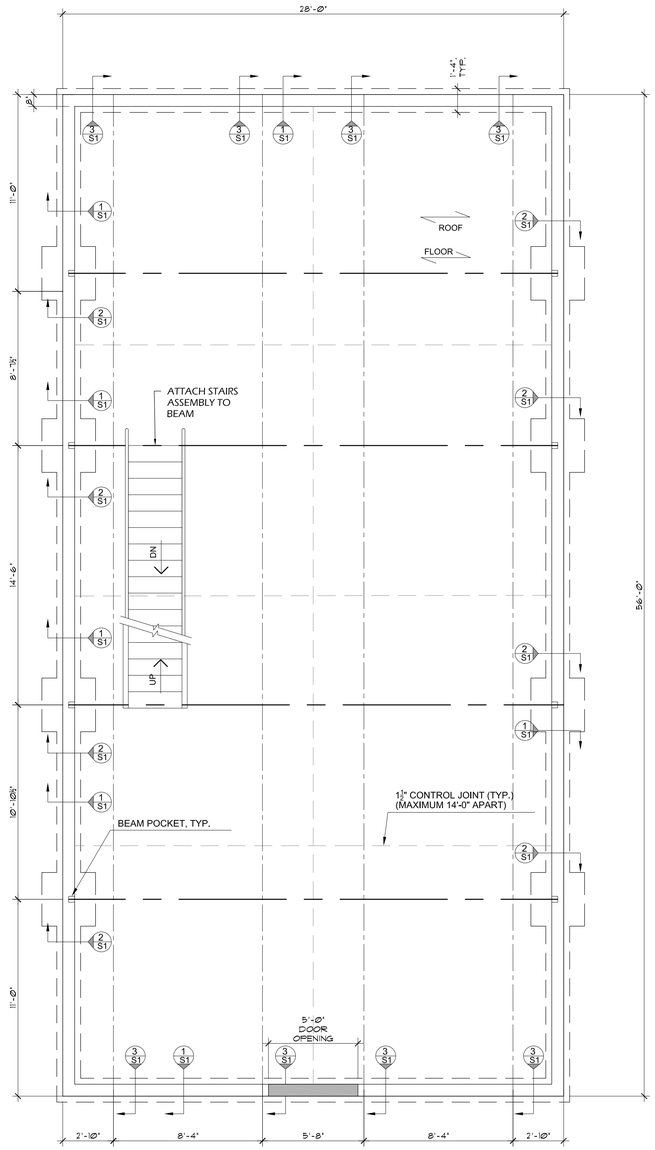

NORTH

FOUNDATION PLAN
1/4" = 1'-0"

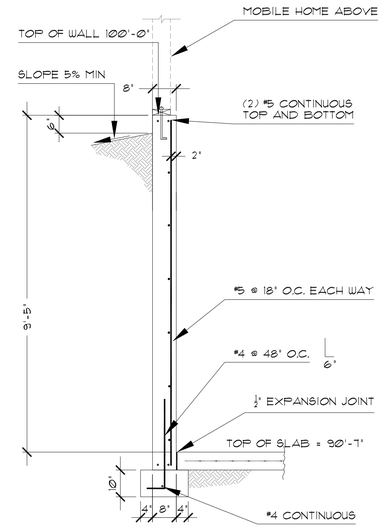

SECTION 1
1/2" = 1'-0"

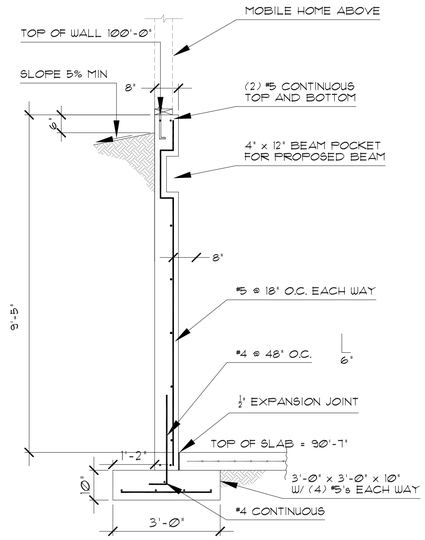

SECTION 2
1/2" = 1'-0"

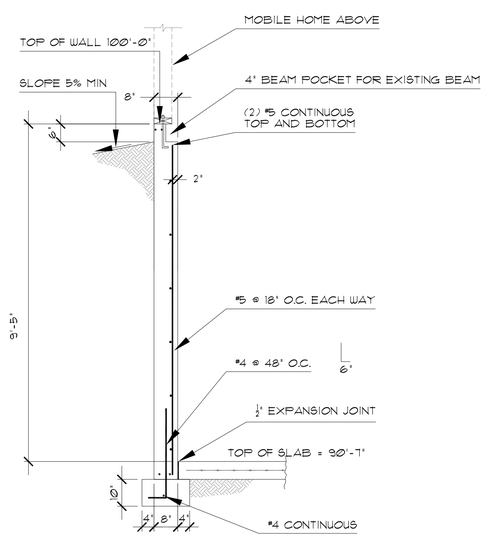

SECTION 3
1/2" = 1'-0"

Released for Permit
03/16/2021 8:02:11 AM
REGIONAL
CONSTRUCTION

DK Horn Engineering & Design Inc.

2441 SOUTH PRAIRIE AVENUE
PUEBLO, CO 81005
TEL 719.696.8274
DARLENE@DKHENG.COM

STAMP:

COLORADO REGISTERED PROFESSIONAL ENGINEER
42686
11/11/2020

MOBILE HOME BASEMENT

17185 SAGE CREST RD.
PEYTON, CO, 80831

PROJECT NUMBER: 2020-D051-A
DRAWN BY: SAT
REVIEWED BY: DKH
DATE: 06-03-2020

ISSUE RECORD:

FOUNDATION PLAN AND SECTION

S1