ROCKY TOP RESOURCES

EXTENDED DETENTION BASIN AND GRADING & EROSION CONTROL PLAN TRACT 7 VALLEY GARDEN SUBDIVISION COLORADO SPRINGS, COLORADO

GENERAL NOTES

1. ALL NEW CONSTRUCTION TO CONFORM TO THE SPECIFICATIONS OF THE EL PASO COUNTY DEPARTMENT OF PUBLIC SERVICES. ANY ASPHALT REMOVED IS TO BE REPLACED TO MEET THE SPECIFICATIONS OF THE EL PASO COUNTY DEPARTMENT OF PUBLIC SERVICES.
2. A PRE-CONSTRUCTION MEETING SHALL BE HELD WITH THE EL PASO COUNTY DEPARTMENT OF DEVELOPMENT SERVICES PRIOR TO ANY CONSTRUCTION.
3. APPROVED PLANS, EL PASO COUNTY ENGINEERING CRITERIA MANUAL, ETC. IS REQUIRED TO BE ON-SITE AT ALL TIMES.
4. ALL NECESSARY PERMITS, SUCH AS WORKING IN THE RIGHT-OF-WAY, SWMP, FUGITIVE DUST, ESQCP, ACCESS, C.O.E. 404, ETC. SHALL BE OBTAINED PRIOR TO CONSTRUCTION.
5. PROFILE DESIGN LINES AND HORIZONTAL STATIONING ARE BASED ON CENTERLINE, AS SHOWN, UNLESS OTHERWISE NOTED.
6. FOR CENTERLINE DESIGN, CURB AND GUTTER, ROAD SIDE DITCH LOCATIONS AND SIDEWALK SEE INDIVIDUAL PLAN AND PROFILE SHEETS. PAVEMENT DESIGN TO BE BASED ON RESISTANCE VALUE 'R' DERIVED FROM HVEEM TESTS AND ARE TO BE APPROVED BY THE EL PASO COUNTY DEPARTMENT OF DEVELOPMENT SERVICES PRIOR TO WORK ABOVE SUBGRADE.
7. ALL VERTICAL DESIGN AND TOP OF CURB ARE BASED ON THE DESIGN POINT AS SHOWN IN THE TYPICAL CROSS SECTION.
8. AT INTERSECTIONS, ALL RADII TO EDGE OF ASPHALT SHALL BE 20-FOOT UNLESS OTHERWISE NOTED.
9. THE LOCATIONS OF THE EXISTING UTILITIES HAVE BEEN SHOWN ACCORDING TO THE BEST AVAILABLE INFORMATION. THE CONTRACTOR IS RESPONSIBLE FOR FIELD LOCATION AND VERIFICATION OF EXISTING UTILITIES PRIOR TO BEGINNING WORK. IF IT APPEARS THAT THERE COULD BE A CONFLICT WITH ANY UTILITIES, WHETHER INDICATED ON THE PLANS OR NOT, THE CONTRACTOR IS TO NOTIFY THE ENGINEER AND OWNER IMMEDIATELY. THE CONTRACTOR IS RESPONSIBLE FOR THE PROTECTION AND REPAIR (IF NECESSARY) OF ALL UTILITIES.
10. WHERE APPROPRIATE, NEATLY SAW CUT ALL EXISTING CONCRETE AND ASPHALT. REPAIR/REPLACE ALL DISTURBED EXISTING ITEMS WITH LIKE MATERIALS AND THICKNESSES. MINIMUM ASPHALT THICKNESS SHALL BE 4-INCHES.
11. ALL DISTURBED AREAS SHALL BE REVEGETATED WITH NATIVE GRASSES WITHIN 21 DAYS OF EXCAVATION PER EROSION CONTROL PLAN.
12. THE PREPARED EROSION/SEDIMENT CONTROL PLAN IS TO BE CONSIDERED A PART OF THESE PLANS AND ITS REQUIREMENTS ADHERED TO DURING THE CONSTRUCTION OF THIS PROJECT.
13. ALL STORM AND SANITARY SEWER PIPE LENGTHS AND SLOPES ARE FIGURED FROM CENTER OF MANHOLE OR BEND. CULVERT PIPE LENGTHS ARE DETERMINED FROM THE END OF THE FLARED END SECTIONS. PIPE LENGTHS ARE GIVEN AS A HORIZONTAL LENGTH.
14. ALL STORM SEWER BEDDING TO BE PER CDOT STANDARDS.
15. ALL STORM SEWER PIPE CLASS AND TYPE IS CALLED OUT ON THE PLAN AND PROFILE SHEETS.
16. CONCRETE PIPE JOINT FASTENERS ARE REQUIRED ON THE FIRST TWO PIPE JOINTS FROM THE DOWNSTREAM FLARED END SECTION OF A DRAINAGE PIPE.
17. ALL WYES AND BENDS USED IN CONSTRUCTION OF STORM SEWER FACILITIES SHALL BE FACTORY FABRICATED, UNLESS APPROVED BY THE EL PASO COUNTY DEPARTMENT OF DEVELOPMENT SERVICES.
18. CONSTRUCTION AND MATERIALS USED IN ALL STORM AND SANITARY SEWER MANHOLES SHALL BE PER SPECIFICATIONS. STORM SEWER RADIAL DEFLECTIONS TO BE GROUTED OR INSTALLED PER MANUFACTURERS RECOMMENDATIONS.
19. STORM SEWER MANHOLE SIZES AS FOLLOWS UNLESS OTHERWISE SHOWN:
    - 18" THRU 36" USE 48" I.D. MANHOLE
    - 42" THRU 48" USE 60" I.D. MANHOLE
    - 54" THRU 60" USE 72" I.D. MANHOLE
    - NOTE: MANHOLE SIZES TABULATED HERE SHALL BE INCREASED, IF NECESSARY, TO ACCOMMODATE INCOMING LATERALS.
20. ALL EARTHWORK, MATERIALS AND INSTALLATION ASSOCIATED WITH THE EXCAVATION, EMBANKMENT AND ASPHALT PAVING TO BE CARRIED OUT IN THIS PROJECT ARE TO BE COMPLETED IN CONFORMANCE WITH THE EL PASO COUNTY ECM AND THE PIKES PEAK ASPHALT PAVING SPECIFICATIONS.

BENCHMARK: FIMS Monument Z-395 is a stainless steel rod inside an aluminum flange stamped "Z 395 1983" set by the NGS 335 feet Northwest of the center of Royer Street, 50 feet Northeast of the center of E. Las Vegas Street, 27 feet Southwest of the near rail of the Denver and Rio Grande Western tracks, 3 feet Northwest of a utility pole with 1 guy wire, 1 foot Southeast of a witness post, 4 feet below the tracks; Elevation = 5914.77 (FIMS datum) plus 3.465 foot adjustment to NAVD 88 datum per VERTCON adjustment = 5918.23.

BASIS OF BEARING: THE BEARINGS & DISTANCES SHOWN ON SITE DEVELOPMENT PLAN

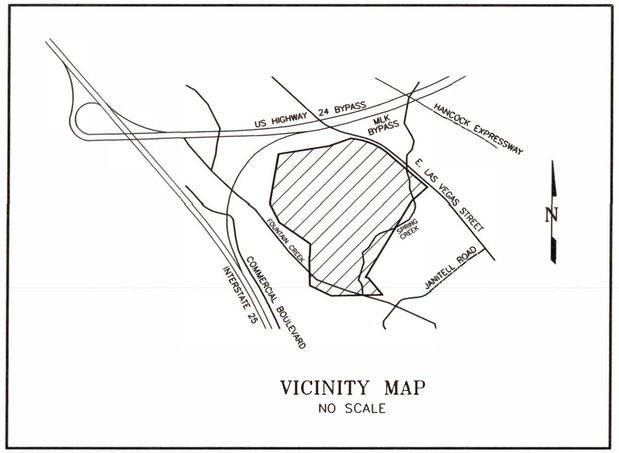

VICINITY MAP
NO SCALE

STANDARD CONSTRUCTION NOTES

1. ALL DRAINAGE AND ROADWAY CONSTRUCTION SHALL MEET THE STANDARDS AND SPECIFICATIONS OF THE EL PASO COUNTY DRAINAGE CRITERIA MANUAL, VOLUMES 1 AND 2, AND THE EL PASO COUNTY ENGINEERING CRITERIA MANUAL.
2. CONTRACTOR SHALL BE RESPONSIBLE FOR THE NOTIFICATION AND FIELD NOTIFICATION OF ALL EXISTING UTILITIES, WHETHER SHOWN ON THE PLANS OR NOT, BEFORE BEGINNING CONSTRUCTION. LOCATION OF EXISTING UTILITIES SHALL BE VERIFIED BY THE CONTRACTOR PRIOR TO CONSTRUCTION. CALL 811 TO CONTACT THE UTILITY NOTIFICATION CENTER OF COLORADO (UNCC).
3. CONTRACTOR SHALL KEEP A COPY OF THESE APPROVED PLANS, THE GRADING AND EROSION CONTROL PLAN, THE STORMWATER MANAGEMENT PLAN (SWMP), THE SOILS AND GEOTECHNICAL REPORT, AND THE APPROPRIATE DESIGN AND CONSTRUCTION STANDARDS AND SPECIFICATIONS AT THE JOB SITE AT ALL TIMES, INCLUDING THE FOLLOWING:
   a. EL PASO COUNTY ENGINEERING CRITERIA MANUAL (ECM)
   b. COLORADO DEPARTMENT OF TRANSPORTATION (CDOT) STANDARD SPECIFICATIONS FOR ROAD AND BRIDGE CONSTRUCTION
   c. CDOT M & S STANDARDS
4. NOTWITHSTANDING ANYTHING DEPICTED IN THESE PLANS IN WORDS OR GRAPHIC REPRESENTATION, ALL DESIGN AND CONSTRUCTION RELATED TO ROADS, STORM DRAINAGE AND EROSION CONTROL SHALL CONFORM TO THE STANDARDS AND REQUIREMENTS OF THE MOST RECENT VERSION OF THE RELEVANT ADOPTED EL PASO COUNTY STANDARDS, INCLUDING THE LAND DEVELOPMENT CODE, THE ENGINEERING CRITERIA MANUAL, THE DRAINAGE CRITERIA MANUAL, AND THE DRAINAGE CRITERIA MANUAL VOLUME 2. ANY DEVIATIONS FROM REGULATIONS AND STANDARDS MUST BE REQUESTED, AND APPROVED, IN WRITING. ANY MODIFICATIONS NECESSARY TO MEET CRITERIA AFTER-THE-FACT WILL BE ENTIRELY THE DEVELOPER'S RESPONSIBILITY TO RECTIFY.
5. IT IS THE DESIGN ENGINEER'S RESPONSIBILITY TO ACCURATELY SHOW EXISTING CONDITIONS, BOTH ONSITE AND OFFSITE, ON THE CONSTRUCTION PLANS. ANY MODIFICATIONS NECESSARY DUE TO CONFLICTS, OMISSIONS, OR CHANGED CONDITIONS WILL BE ENTIRELY THE DEVELOPER'S RESPONSIBILITY TO RECTIFY.
6. CONTRACTOR SHALL SCHEDULE A PRE-CONSTRUCTION MEETING WITH EL PASO COUNTY PUBLIC SERVICES DEPARTMENT – INSPECTIONS, PRIOR TO STARTING CONSTRUCTION.
7. IT IS THE CONTRACTOR'S RESPONSIBILITY TO UNDERSTAND THE REQUIREMENTS OF ALL JURISDICTIONAL AGENCIES AND TO OBTAIN ALL REQUIRED PERMITS, INCLUDING BUT NOT LIMITED TO EL PASO COUNTY EROSION AND STORMWATER QUALITY CONTROL PERMIT (ESQCP), REGIONAL BUILDING FLOODPLAIN DEVELOPMENT PERMIT, U.S. ARMY CORPS OF ENGINEERS-ISSUED 401 AND/OR 404 PERMITS, AND COUNTY AND STATE FUGITIVE DUST PERMITS.
8. CONTRACTOR SHALL NOT DEVIATE FROM THE PLANS WITHOUT FIRST OBTAINING WRITTEN APPROVAL FROM THE DESIGN ENGINEER AND DSD. CONTRACTOR SHALL NOTIFY THE DESIGN ENGINEER OR THE AUTHORITY HAVING JURISDICTION IMMEDIATELY UPON DISCOVERY OF ANY ERRORS OR INCONSISTENCIES.
9. ALL STORM DRAIN PIPE SHALL BE CLASS III RCP UNLESS OTHERWISE NOTED AND APPROVED BY DSD.
10. CONTRACTOR SHALL COORDINATE GEOTECHNICAL TESTING PER ECM STANDARDS. PAVEMENT DESIGN SHALL BE APPROVED BY EL PASO COUNTY DSD PRIOR TO PLACEMENT OF CURB AND GUTTER AND PAVEMENT.
11. ALL CONSTRUCTION TRAFFIC MUST ENTER/EXIT THE SITE AT APPROVED CONSTRUCTION ACCESS POINTS.
12. SIGHT VISIBILITY TRIANGLES AS IDENTIFIED IN THE PLANS SHALL BE PROVIDED AT ALL INTERSECTIONS. OBSTRUCTIONS GREATER THAN 18 INCHES ABOVE FLOWLINE ARE NOT ALLOWED WITHIN SIGHT TRIANGLES.
13. SIGNING AND STRIPING SHALL COMPLY WITH EL PASO COUNTY DOT AND MUTCD CRITERIA. [IF APPLICABLE, ADDITIONAL SIGNING AND STRIPING NOTES WILL BE PROVIDED.]
14. CONTRACTOR SHALL OBTAIN ANY PERMITS REQUIRED BY EL PASO COUNTY PUBLIC SERVICES DEPARTMENT, INCLUDING WORK WITHIN THE RIGHT-OF-WAY AND SPECIAL TRANSPORT PERMITS.

THE LIMITS OF CONSTRUCTION SHALL REMAIN WITHIN THE PROPERTY LINE UNLESS OTHERWISE NOTED. THE OWNER/DEVELOPER SHALL OBTAIN WRITTEN PERMISSION AND EASEMENTS, WHERE REQUIRED, FROM ADJOINING PROPERTY OWNER(S) PRIOR TO ANY OFF-SITE DISTURBANCE, GRADING, OR CONSTRUCTION.

STATEMENTS

Design Engineer's Statement:

These detailed plans and specifications were prepared under my direction and supervision. Said plans and specifications have been prepared according to the criteria established by the County for detailed roadway, drainage, grading and erosion control plans and specifications, and said plans and specifications are in conformity with applicable master drainage plans and master transportation plans. Said plans and specifications meet the purposes for which the particular roadway and drainage facilities are designed and are correct to the best of my knowledge and belief. I accept responsibility for any liability caused by any negligent acts, errors or omissions on my part in preparation of these detailed plans and specifications.

COLORADO LICENSED PROFESSIONAL ENGINEER 10310 09/30/2022 33365

4/15/2020

Richard N. Wray, P.E. #19310 — Date
For and on behalf of Kiowa Engineering Corp.

* APPROVED
Engineering Department
10/18/2022 2:18:20 PM
dsdwhang
EPC Planning & Community Development Department

*EPC accepted changes 10/18/2022

Owner/Developer's Statement:

I, the owner/developer have read and will comply with all of the requirements specified in these detailed plans and specifications.

4/15/20

Frederick Martin
Rocky Top Resources
1755 E. Las Vegas Street
Colorado Springs, Colorado 80903

El Paso County:

County plan review is provided only for general conformance with County Design Criteria. The County is not responsible for the accuracy and adequacy of the design, dimensions, and/or elevations which shall be confirmed at the job site. The County through the approval of this document assumes no responsibility for completeness and/or accuracy of this document.

Filed in accordance with the requirements of the El Paso County Land Development Code, Drainage Criteria Manual, and Engineering Criteria Manual as amended.

In accordance with ECM Section 1.12, these construction documents will be valid for construction for a period of 2 years from the date signed by the El Paso County Engineer. If construction has not started within those 2 years the plans will need to be resubmitted for approval, including payment of review fees at the Planning and Community Development Directors discretion.

Jennifer Irvine, P.E.,
County Engineer / ECM Administrator

Approved
By: Elizabeth Nijkamp
Date:06/23/2020
El Paso County Planning & Community Development

ABBREVIATIONS

ASSY	= ASSEMBLY	MH	= MANHOLE
BNDY	= BOUNDARY	MIN.	= MINIMUM
B.O.P.	= BOTTOM OF PIPE	NTS	= NOT TO SCALE
℄	= CENTERLINE	O.D.	= OUTSIDE DIAMETER
CL	= CLASS	PC	= POINT OF HORIZONTAL CURVATURE
CRA	= CONCRETE REVERSE ANCHOR	PCHC	= POINT OF CURVATURE ON HORIZ. CURVE
CTRB	= CONCRETE THRUST BLOCK	PP	= PROPOSED
CR	= POINT OF CURB RETURN	PT	= POINT OF HORIZONTAL TANGENCY
DIP	= DUCTILE IRON PIPE	PTHC	= POINT OF TANGENCY ON HORIZ. CURVE
EL	= ELEVATION	PVC	= POLY VINYL CHLORIDE PIPE
ESMT	= EASEMENT	PVC	= POINT OF VERTICAL CURVATURE
EX.	= EXISTING	PVI	= POINT OF VERTICAL INTERSECTION
FC	= FACE OF CURB	PVT	= POINT OF VERTICAL TANGENCY
FES	= FLARED END SECTION	RCB	= REINFORCED CONCRETE BOX
FLG	= FLANGE	RCP	= REINFORCED CONCRETE PIPE
FL	= FLOWLINE	ROW	= RIGHT OF WAY
GB	= GRADE BREAK	RT	= RIGHT
HP	= HIGH POINT	SHT	= SHEET
HORIZ.	= HORIZONTAL	SS	= SANITARY SEWER
HYD	= HYDRANT	STA.	= STATION
I.D.	= INSIDE DIAMETER	STD.	= STANDARD
LT	= LEFT	T.O.P.	= TOP OF PIPE
LF	= LINEAR FEET	TYP.	= TYPICAL
LP	= LOW POINT	VC	= VERTICAL CURVE
MAX.	= MAXIMUM	VERT.	= VERTICAL

PREPARED BY:

Kiowa Engineering Corporation
1604 South 21st Street
Colorado Springs, Colorado 80904
(719) 630-7342

DEVELOPER:

ROCKY TOP RESOURCES, INC.
FREDRICK D. MARTIN
1755 E. LAS VEGAS STREET
COLORADO SPRINGS, CO 80903-4323
(719) 579-9103

INDEX OF SHEETS

Kiowa Project No. 17066

FEBRUARY 2020
Revised Sept 2022

*A.G.A./A.P.W.A. STANDARD UTILITY MARKING COLOR CODE

NATURAL GAS	YELLOW
ELECTRIC	RED
WATER	BLUE
WASTEWATER	GREEN

CALL BEFORE YOU DIG...
48 HOURS BEFORE YOU DIG, CALL UTILITY LOCATORS FOR LOCATING AND MARKING GAS, ELECTRIC, WATER AND WASTEWATER
1-800-922-1987

PCD PROJECT NO. PPR1913

17066-OVERLOT-Cov.dwg/Mar 05, 2020/1:51pm

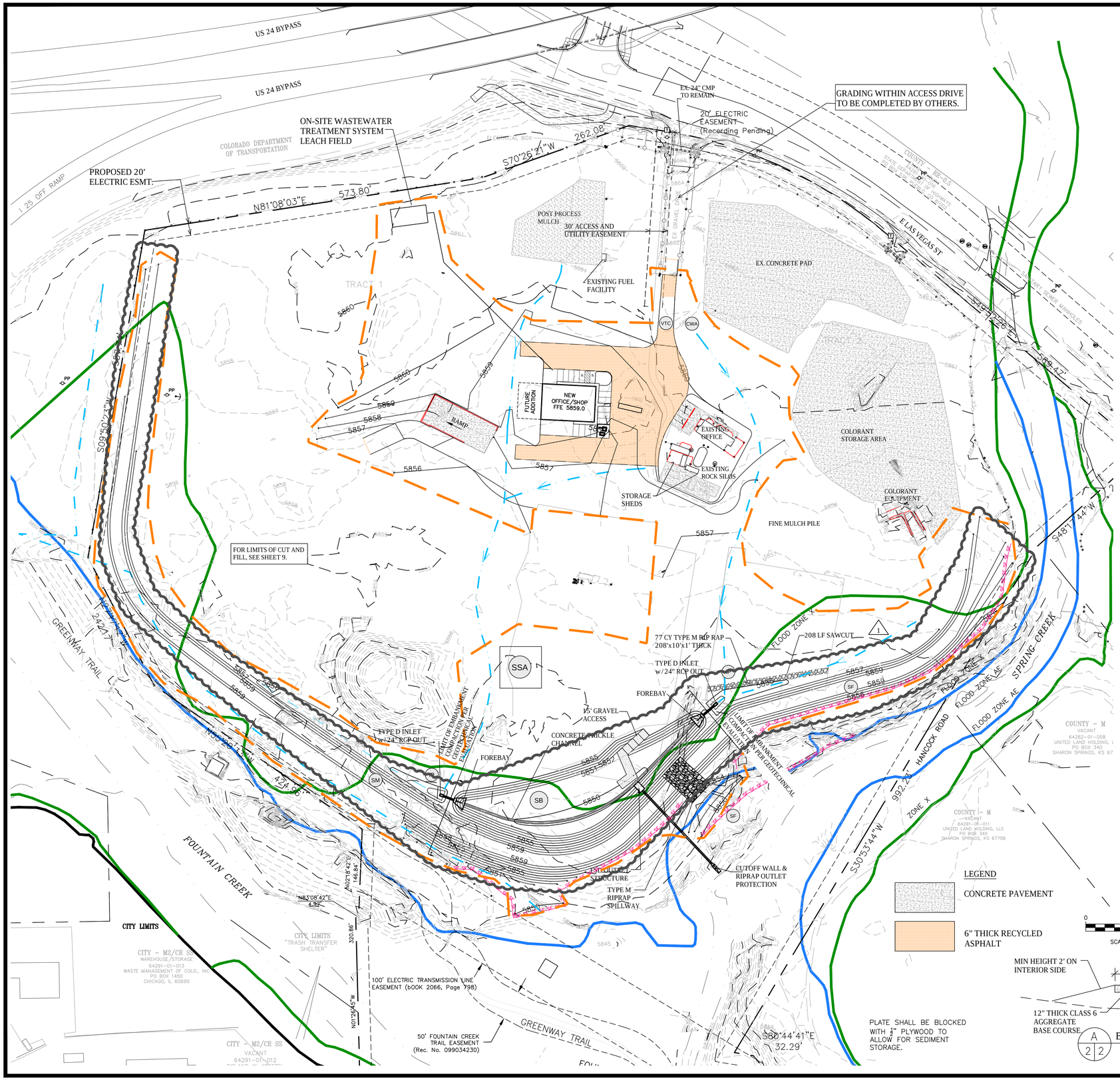

GRADING & EROSION CONTROL BMP PHASING	
BMP	PHASE
SF, SSA	INITIAL
IP, CWA	INTERIM
SM	INTERIM / FINAL

SUMMARY OF EARTHWORK (1)

CUT	13,294 CY
FILL	13,717 CY
NET FILL	423 CY

(1) QUANTITIES SUMMARIZED ARE PROVIDED FOR INFORMATIONAL PURPOSES ONLY. CONTRACTOR SHALL INDEPENDENTLY VERIFY EARTHWORK QUANTITIES AS PART OF BIDDING THE GRADING WORK SHOWN ON THE DESIGN PLANS.

VEGETATION WITHIN THE ACTIVE AREAS OF RECYCLING OPERATIONS CONSIST OF GRASSES AND HERBS. NO SHRUBS OR TREES PRESENTLY LIE WITHIN THE AREA OF DISTURBANCE.

NOTE:
DURING CONSTRUCTION AND UNTIL FINAL STABILIZATION, OPENINGS IN PERFORATED PLATE SHALL BE BLOCKED WITH ½" PLYWOOD TO ALLOW FOR SEDIMENT STORAGE.

LIMIT OF EMBANKMENT COMPACTION PER GEOTECHNICAL EVALUATION

Know what's below. Call before you dig.

EROSION CONTROL LEGEND

- LIMITS OF CONSTRUCTION & DISTURBANCE
- PROPERTY LINE
- SM — SEEDING & MULCHING
- VTC — VEHICLE TRACKING CONTROL
- IP — INLET PROTECTION
- CWA — CONCRETE WASHOUT AREA
- SSA — STABILIZED STAGING AREA
- SB — SEDIMENT BASIN
- SF — SILT FENCE
- FLOODZONE X
- FLOODZONE AE
- DRAINAGE FLOW PATH
- EXISTING CONTOUR
- PROPOSED CONTOUR

PROJECT SPECIFIC GRADING AND EROSION CONTROL NOTES

1. All earthwork required of this construction shall be completed in accordance with all applicable sections of the Project Specifications and Soil Investigation Report (Geotechnical Report).
2. Rubbish including timber, concrete rubble, trees, brush, and asphalt shall not be backfilled adjacent to any of the structures or be in the placement of any unclassified fill. The Contractor shall be responsible for the removal and hauling of such materials to a suitable spoil area. Costs associated with the removal of such materials shall be paid for as documented in the Project Specifications.
3. Excess excavation shall become the property of the Contractor and shall be disposed of at the Contractor's expense. The cost of haulage and spoiling of excess excavated materials shall be paid for as documented in the Project Specifications.
4. Water shall be used as a dust palliative as required and shall be included in the cost for earthwork item(s). No separate payment will be made for dust control associated with the site construction.
5. The road grades shall be cleared of vegetation and the topsoil stockpiled for later use.
6. All grading shall be in conformance with "Subsurface Investigation, 1755 East Las Vegas, Colorado Springs, Colorado", prepared by Entech Engineering, April 2019, Revised December 2019.
7. Placement of fill for roadway embankments shall be completed in conformance with the Geotechnical Report.
8. Grading contours shown on this plan are to final grade.
9. Compaction under filled areas, including roadway and detention basin embankments, shall be 95 percent of the maximum Standard Proctor Density (ASTM D698) at two (2) percent of optimum moisture content.
10. No rubble or debris shall be placed in the backfill under any of the proposed buildings, streets, curb & gutter, sidewalk and drainage structures or within five (5) feet of a building footprint. Properly graded rubble may be used in some locations as specified and verified by the Geotechnical Engineer.
11. Contractor is responsible for reviewing the site prior to bidding to verify site conditions.
12. Contractor is responsible for providing erosion control measures as approved by the El Paso County PCD Engineering Division and as may be required by the El Paso County Inspector.
13. All slopes equal to or greater than 3:1 shall require anchored soil retention blanket (SRB), Geocoir 700 or equal.
14. The Developer is responsible for maintaining erosion control measures until a mature stage of vegetation is established.
15. All soils used for fill must be approved by a representative of the Geotechnical Engineer.
16. All natural ground to receive fill must be properly scarified, watered and compacted prior to placing fill.
17. The Contractor is solely responsible for the design, maintenance and operation of any required dewatering system. The Contractor shall perform such independent investigation as he deems necessary to satisfy himself as to the subsurface groundwater conditions and unstable soil conditions to be encountered throughout the construction. Contractor shall coordinate the dewatering system with El Paso County when associated with public facilities.
18. No fill shall be placed, spread or rolled while it is frozen, thawing or during unfavorable weather conditions. When the work is interrupted by heavy rain, fill operations shall not be resumed until a representative of the Geotechnical Engineer indicates that the moisture content and density of the previously placed fill are as specified. Fill surfaces may be scarified and recompacted after rainfall if necessary, to obtain proper moisture density relation.
19. Additional erosion control structures and/or grading may be required at the time of construction.
20. Sediment removal for erosion control facilities shall be performed continuously for proper function.
21. Base mapping was provided by LDC, Inc, date Sept. 2018.
22. Proposed Construction Schedule:
    Begin Construction: April 1, 2020
    End Construction: January, 2021
    Total Site Area = 44.8 Acres
23. Area to be disturbed = 15.5 Acres (est.).
    Existing 100-year runoff coefficient = 0.65
    Proposed 100-year runoff coefficient = 0.65
    Existing Hydrologic Soil Groups: A/B
    (B Ustic Torrifluvents)
24. Site is currently developed and covered with native grasses on moderate to steep slopes (2%-4%).
25. Site is located in the Spring Creek Drainage Basin.

LEGEND

- CONCRETE PAVEMENT
- 6" THICK RECYCLED ASPHALT

0 80' 160'
SCALE: 1"=80'

*EPC accepted changes 10/18/2022

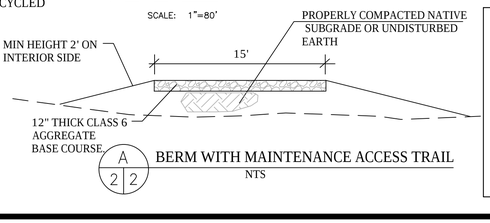

A 2/2 BERM WITH MAINTENANCE ACCESS TRAIL
NTS

PLATE SHALL BE BLOCKED WITH ½" PLYWOOD TO ALLOW FOR SEDIMENT STORAGE.

COLORADO LICENSED
SCOTT A. CARTWRIGHT
09/30/2022
33365
PROFESSIONAL ENGINEER

For and on Behalf of Kiowa Engineering Corporation

Date

Kiowa Engineering Corporation
1604 South 21st Street
Colorado Springs, Colorado 80904
(719) 630-7342

ROCKY TOP RESOURCES
GRADING & EROSION CONTROL PLAN INITIAL & INTERIM PHASES
TRACT 7 VALLEY GARDEN SUBDIVISION
1755 EAST LAS VEGAS STREET
COLORADO SPRINGS, COLORADO

Project No.:	17066
Date:	8/3/22
Design:	RNW
Drawn:	EAK
Check:	RNW
Revisions:	
1	REVISE BERM GRADING

New Sept 2022

2

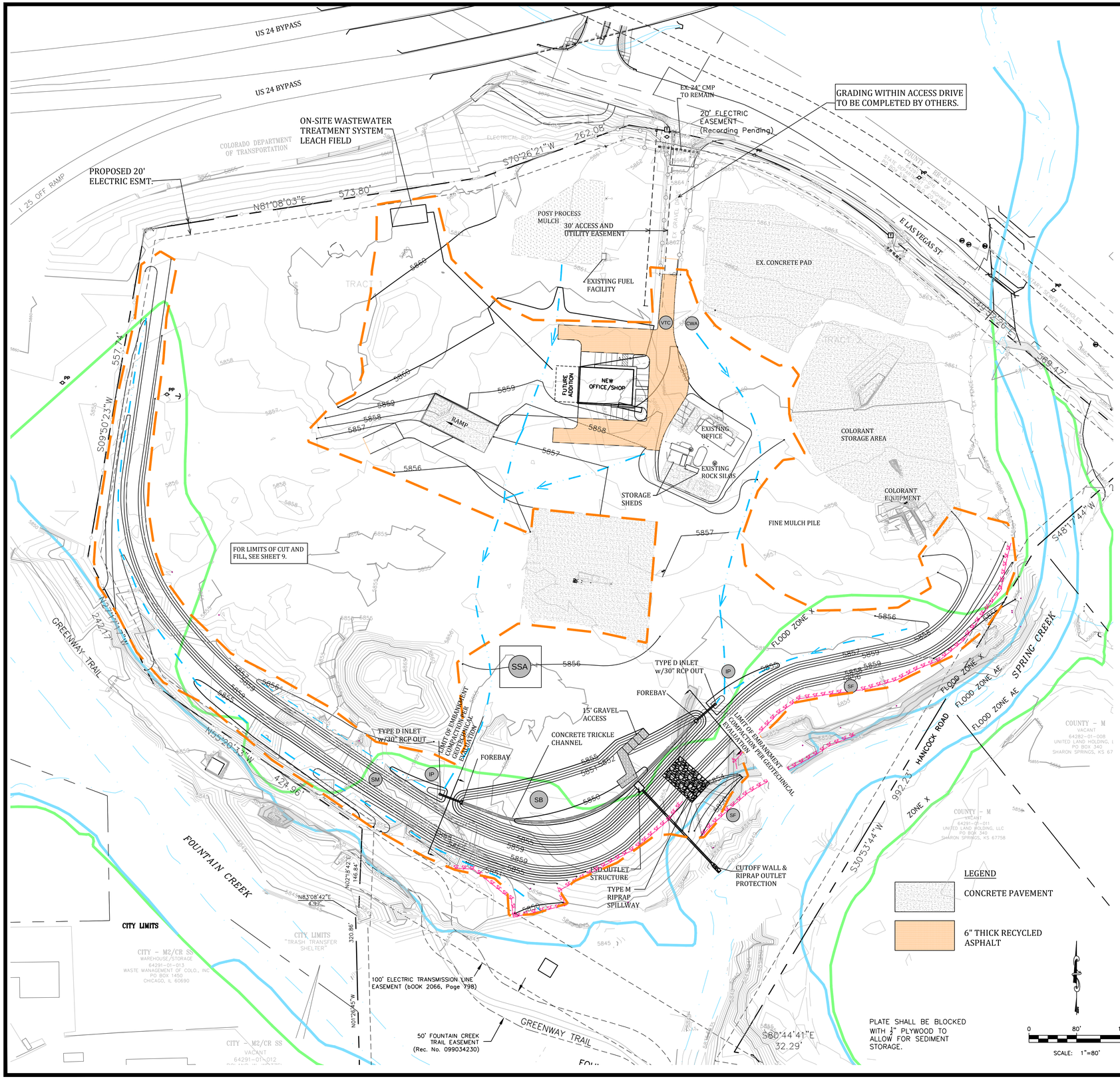

VEGETATION WITHIN THE ACTIVE AREAS OF RECYCLING OPERATIONS CONSIST OF GRASSES AND HERBS. NO SHRUBS OR TREES PRESENTLY LIE WITHIN THE AREA OF DISTURBANCE.

SUMMARY OF EARTHWORK (1)

CUT	13,294 CY
FILL	13,717 CY
NET FILL	423 CY

(1) QUANTITIES SUMMARIZED ARE PROVIDED FOR INFORMATIONAL PURPOSES ONLY. CONTRACTOR SHALL INDEPENDENTLY VERIFY EARTHWORK QUANTITIES AS PART OF BIDDING THE GRADING WORK SHOWN ON THE DESIGN PLANS.

NOTE:
DURING CONSTRUCTION AND UNTIL FINAL STABILIZATION, OPENINGS IN PERFORATED PLATE SHALL BE BLOCKED WITH ½" PLYWOOD TO ALLOW FOR SEDIMENT STORAGE.

LIMIT OF EMBANKMENT COMPACTION PER GEOTECHNICAL EVALUATION

GRADING & EROSION CONTROL BMP PHASING

BMP	PHASE
SF SSA	INITIAL
IP CWA	INTERIM
SM	INTERIM / FINAL

EROSION CONTROL LEGEND

- LIMITS OF CONSTRUCTION & DISTURBANCE
- PROPERTY LINE
- SM — SEEDING & MULCHING
- VTC — VEHICLE TRACKING CONTROL
- IP — INLET PROTECTION
- CWA — CONCRETE WASHOUT AREA
- SSA — STABILIZED STAGING AREA
- SB — SEDIMENT BASIN
- SF — SILT FENCE
- FLOODZONE X
- FLOODZONE AE
- DRAINAGE FLOW PATH
- EXISTING CONTOUR
- PROPOSED CONTOUR

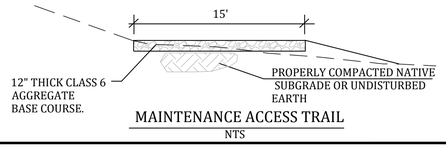

MAINTENANCE ACCESS TRAIL
NTS

LEGEND

- CONCRETE PAVEMENT
- 6" THICK RECYCLED ASPHALT

PROJECT SPECIFIC GRADING AND EROSION CONTROL NOTES

1. All earthwork required of this construction shall be completed in accordance with all applicable sections of the Project Specifications and Soil Investigation Report (Geotechnical Report).
2. Rubbish including timber, concrete rubble, trees, brush, and asphalt shall not be backfilled adjacent to any of the structures or be in the placement of any unclassified fill. The Contractor shall be responsible for the removal and hauling of such materials to a suitable spoil area. Costs associated with the removal of such materials shall be paid for as documented in the Project Specifications.
3. Excess excavation shall become the property of the Contractor and shall be disposed of at the Contractor's expense. The cost of haulage and spoiling of excess excavated materials shall be paid for as documented in the Project Specifications.
4. Water shall be used as a dust palliative as required and shall be included in the cost for earthwork item(s). No separate payment will be made for dust control associated with the site construction.
5. The road grades shall be cleared of vegetation and the topsoil stockpiled for later use.
6. All grading shall be in conformance with "Subsurface Investigation, 1755 East Las Vegas, Colorado Springs, Colorado", prepared by Entech Engineering, April 2019, Revised December 2019.
7. Placement of fill for roadway embankments shall be completed in conformance with the Geotechnical Report.
8. Grading contours shown on this plan are to final grade.
9. Compaction under filled areas, including roadway and detention basin embankments, shall be 95 percent of the maximum Standard Proctor Density (ASTM D698) at two (2) percent of optimum moisture content.
10. No rubble or debris shall be placed in the backfill under any of the proposed buildings, streets, curb & gutter, sidewalk and drainage structures or within five (5) feet of a building footprint. Properly graded rubble may be used in some locations as specified and verified by the Geotechnical Engineer.
11. Contractor is responsible for reviewing the site prior to bidding to verify site conditions.
12. Contractor is responsible for providing erosion control measures as approved by the El Paso County PCD Engineering Division and as may be required by the El Paso County Inspector.
13. All slopes equal to or greater than 3:1 shall require anchored soil retention blanket (SRB), Geocoir 700 or equal.
14. The Developer is responsible for maintaining erosion control measures until a mature stage of vegetation is established.
15. All soils used for fill must be approved by a representative of the Geotechnical Engineer.
16. All natural ground to receive fill must be properly scarified, watered and compacted prior to placing fill.
17. The Contractor is solely responsible for the design, maintenance and operation of any required dewatering system. The Contractor shall perform such independent investigation as he deems necessary to satisfy himself as to the subsurface groundwater conditions and unstable soil conditions to be encountered throughout the construction. Contractor shall coordinate the dewatering system with El Paso County when associated with public facilities.
18. No fill shall be placed, spread or rolled while it is frozen, thawing or during unfavorable weather conditions. When the work is interrupted by heavy rain, fill operations shall not be resumed until a representative of the Geotechnical Engineer indicates that the moisture content and density of the previously placed fill are as specified. Fill surfaces may be scarified and recompacted after rainfall if necessary, to obtain proper moisture density relation.
19. Additional erosion control structures and/or grading may be required at the time of construction.
20. Sediment removal for erosion control facilities shall be performed continuously for proper function.
21. Base mapping was provided by LDC, Inc, date Sept. 2018.
22. Proposed Construction Schedule:
    Begin Construction: April 1, 2020
    End Construction: January, 2021
    Total Site Area = 44.8 Acres
23. Area to be disturbed = 15.5 Acres (est.).
    Existing 100-year runoff coefficient = 0.65
    Proposed 100-year runoff coefficient = 0.65
    Existing Hydrologic Soil Groups: A/B
    (B Ustic Torrifluvents)
24. Site is currently developed and covered with native grasses on moderate to steep slopes (2%-4%).
25. Site is located in the Spring Creek Drainage Basin.

*EPC accepted changes 10/18/2022

EPC 6/23/2020

Kiowa Engineering Corporation
Celebrating 30 years
1604 South 21st Street
Colorado Springs, Colorado 80904
(719) 630-7342

ROCKY TOP RESOURCES
GRADING & EROSION CONTROL PLAN INITIAL & INTERIM PHASES
TRACT 7 VALLEY GARDEN SUBDIVISION
1755 EAST LAS VEGAS STREET
COLORADO SPRINGS, COLORADO

Project No.:	17066
Date:	2/2020
Design:	RNW
Drawn:	EAK
Check:	RNW
Revisions:	

Void Sept 2022

2

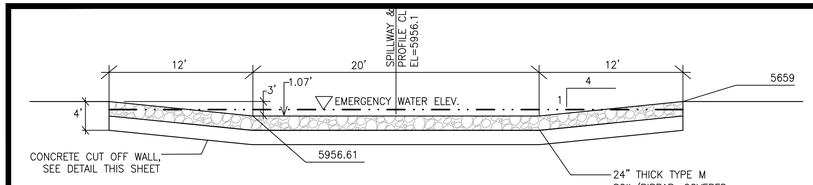

SPILLWAY SECTION
SCALE: NTS

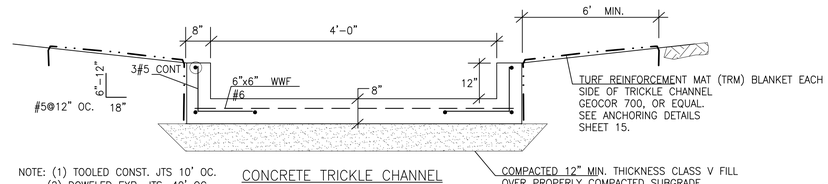

NOTE: (1) TOOLED CONST. JTS 10' OC.
(2) DOWELED EXP. JTS. 40' OC.
(3) f'c = 4000 psi

CONCRETE TRICKLE CHANNEL
NTS

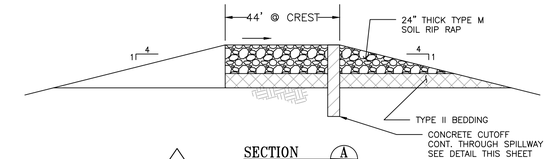

SECTION A 3/3
NTS

SPILLWAY CUTOFF WALL
SCALE: 1"=2'

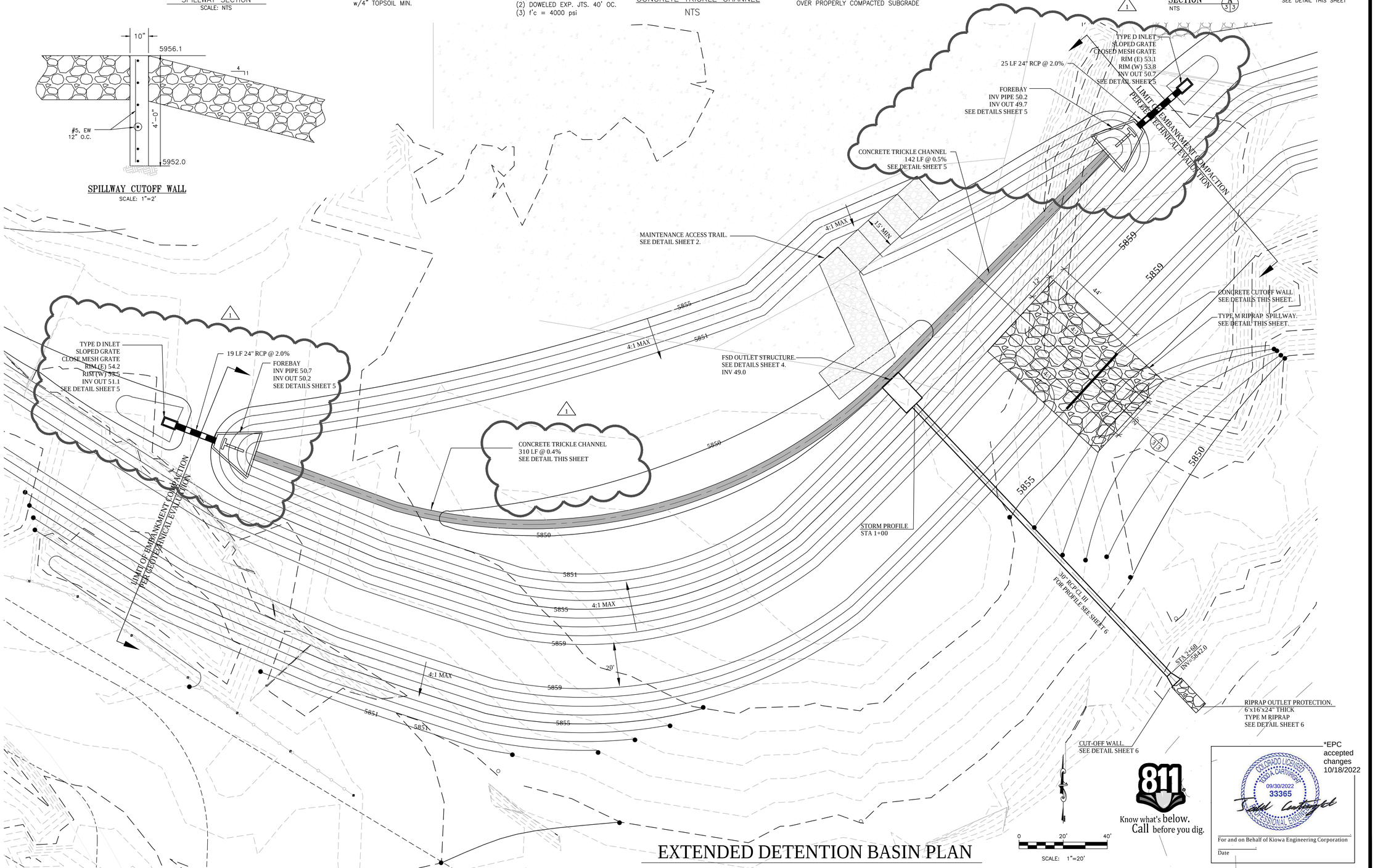

EXTENDED DETENTION BASIN PLAN

811 Know what's below. Call before you dig.

*EPC accepted changes 10/18/2022

COLORADO LICENSED
KODA CARTWRIGHT
09/30/2022
33365
PROFESSIONAL ENGINEER

For and on Behalf of Kiowa Engineering Corporation

Date

Kiowa Engineering Corporation
1604 South 21st Street
Colorado Springs, Colorado 80904
(719) 630-7342

ROCKY TOP RESOURCES
EXTENDED DETENTION BASIN PLAN
TRACT 7 VALLEY GARDEN SUBDIVISION
1755 EAST LAS VEGAS STREET
COLORADO SPRINGS, COLORADO

Project No.:	17066
Date:	8/3/22
Design:	RNW
Drawn:	EAK
Check:	RNW
Revisions:	
1	REVISE RCP SIZE & LENGTH REVISE TRICKLE CHANNEL SLOPES

New Sept 2022

3

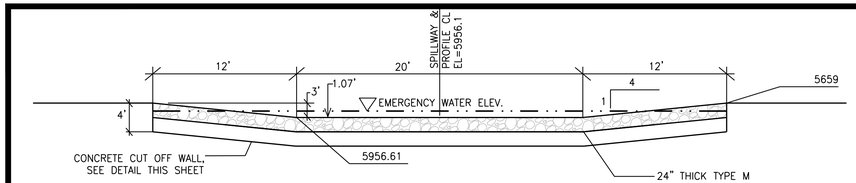

SPILLWAY SECTION
SCALE: NTS

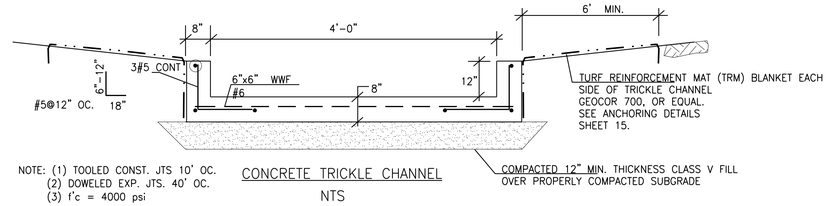

NOTE: (1) TOOLED CONST. JTS 10' OC.
(2) DOWELED EXP. JTS. 40' OC.
(3) f'c = 4000 psi

CONCRETE TRICKLE CHANNEL
NTS

SPILLWAY CUTOFF WALL
SCALE: 1"=2'

SECTION A/3.3
NTS

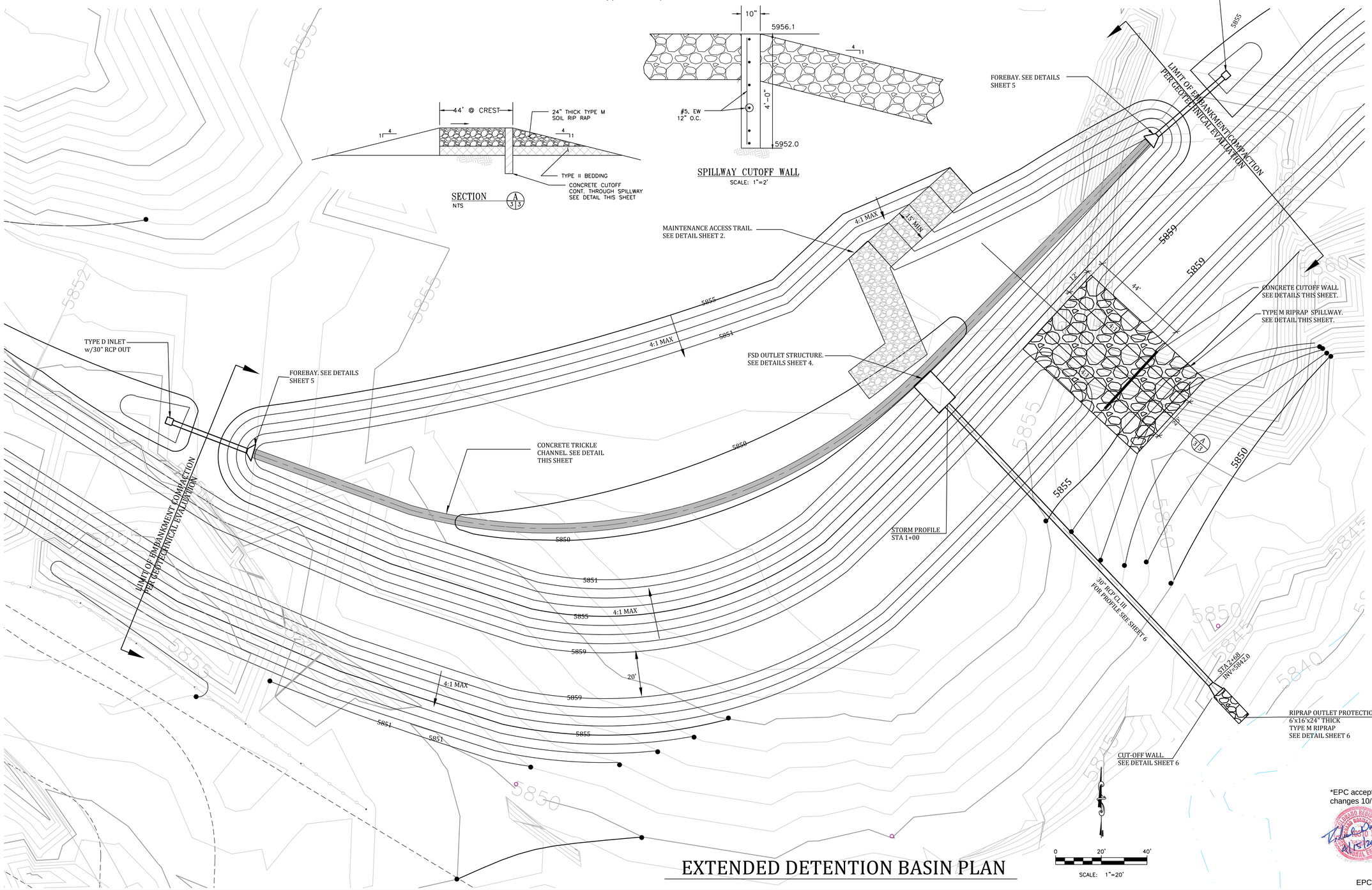

EXTENDED DETENTION BASIN PLAN

*EPC accepted changes 10/18/2022

EPC 6/23/2020

Kiowa Engineering Corporation
Celebrating 30 years
1604 South 21st Street
Colorado Springs, Colorado 80904
(719) 630-7342

ROCKY TOP RESOURCES
EXTENDED DETENTION BASIN PLAN
TRACT 7 VALLEY GARDEN SUBDIVISION
1755 EAST LAS VEGAS STREET
COLORADO SPRINGS, COLORADO

Project No.:	17066
Date:	2/2020
Design:	RNW
Drawn:	EAK
Check:	RNW
Revisions:	

Void Sept 2022

ALL REBAR TO BE EPOXY COATED.

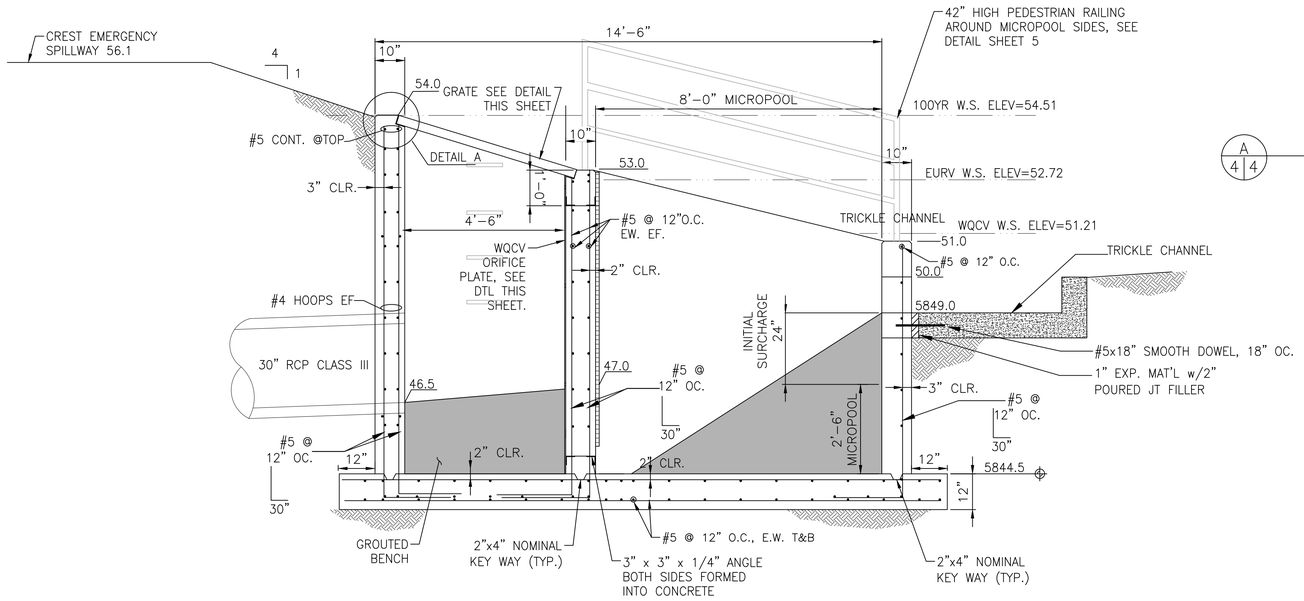

SECTION A 4|4
SCALE: 1"=2'

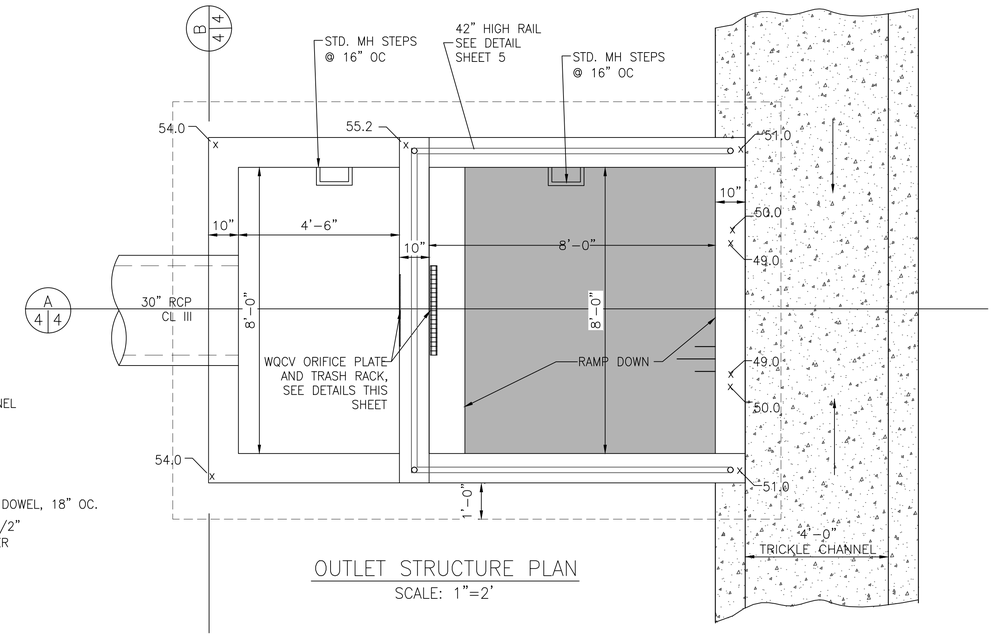

OUTLET STRUCTURE PLAN
SCALE: 1"=2'

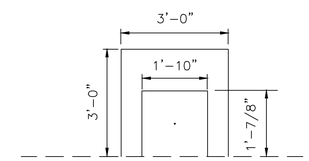

RESTRICTOR PLATE
SCALE: 1"=2'

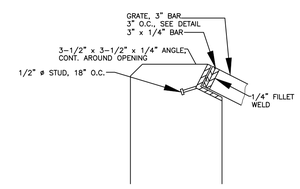

DETAIL A
SCALE: NTS

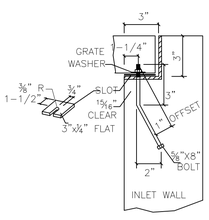

BOLT DOWN GRATE DETAIL
SCALE: NTS

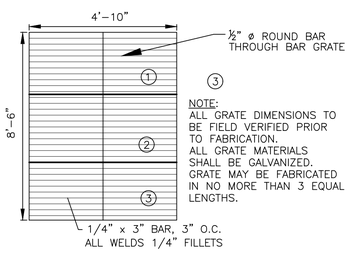

NOTE:
ALL GRATE DIMENSIONS TO BE FIELD VERIFIED PRIOR TO FABRICATION.
ALL GRATE MATERIALS SHALL BE GALVANIZED.
GRATE MAY BE FABRICATED IN NO MORE THAN 3 EQUAL LENGTHS.

MAJOR STORM GRATE DETAIL
SCALE: NTS

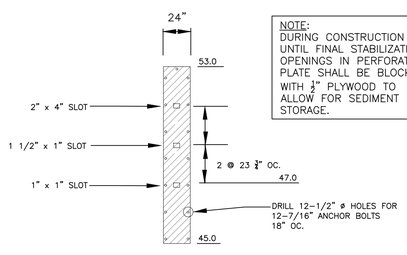

NOTE:
DURING CONSTRUCTION AND UNTIL FINAL STABILIZATION, OPENINGS IN PERFORATED PLATE SHALL BE BLOCKED WITH 1/2" PLYWOOD TO ALLOW FOR SEDIMENT STORAGE.

WQCV ORIFICE PLATE
SCALE: NTS

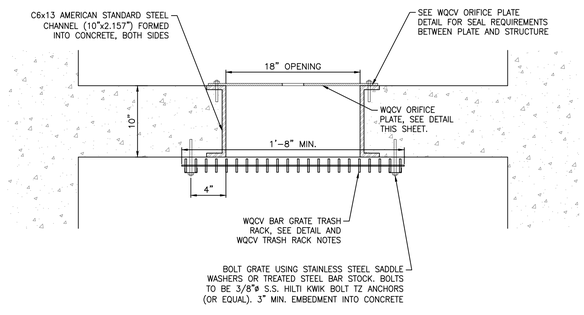

WQCV ORIFICE PLATE AND TRASH RACK
SCALE: NTS

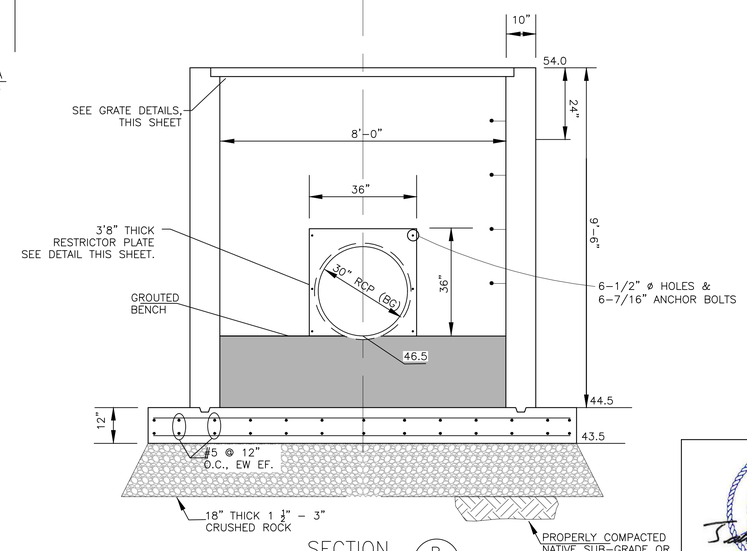

SECTION B 4|4
SCALE: 1"=2'

811 Know what's below. Call before you dig.

*EPC accepted changes 10/18/2022

COLORADO LICENSED KIOWA CERTIFICATE 09/30/2022 33365 PROFESSIONAL ENGINEER

For and on Behalf of Kiowa Engineering Corporation

Date

Kiowa Engineering Corporation
1604 South 21st Street
Colorado Springs, Colorado 80904
(719) 630-7342

ROCKY TOP RESOURCES
EXTENDED DETENTION BASIN OUTLET STRUCTURE DETAILS
TRACT 7 VALLEY GARDEN SUBDIVISION
1755 EAST LAS VEGAS STREET
COLORADO SPRINGS, COLORADO

Project No.:	17066
Date:	8/3/22
Design:	RNW
Drawn:	EAK
Check:	RNW
Revisions:	

New Sept 2022

4

ALL REBAR TO BE EPOXY COATED.

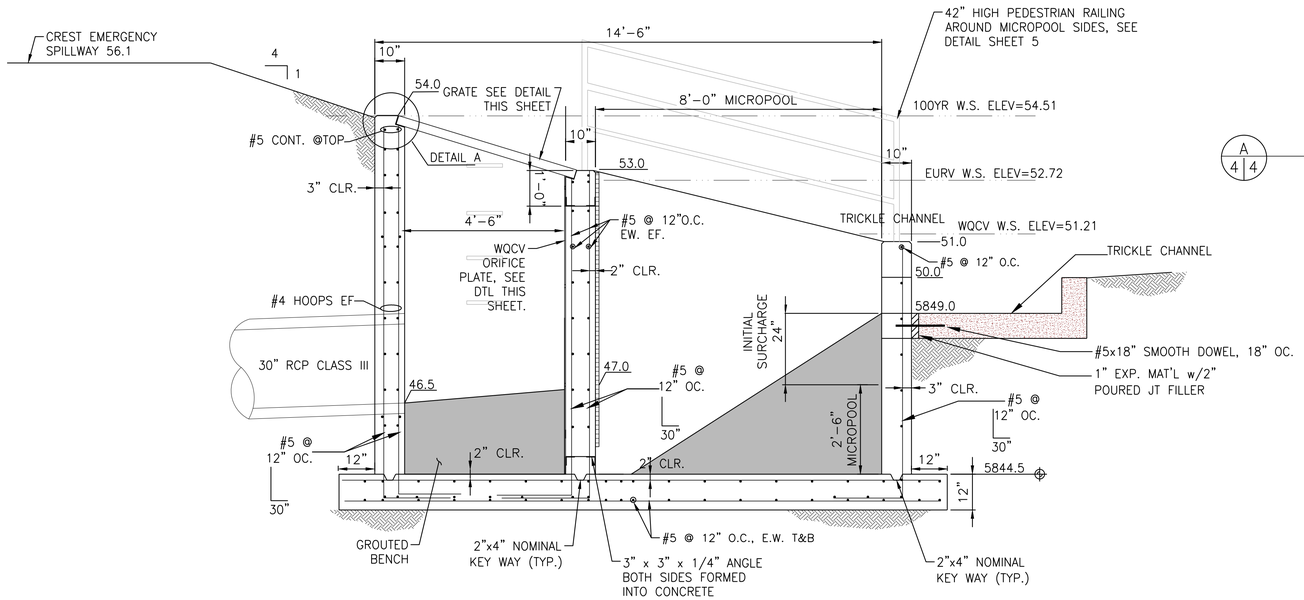

SECTION A 4|4
SCALE: 1"=2'

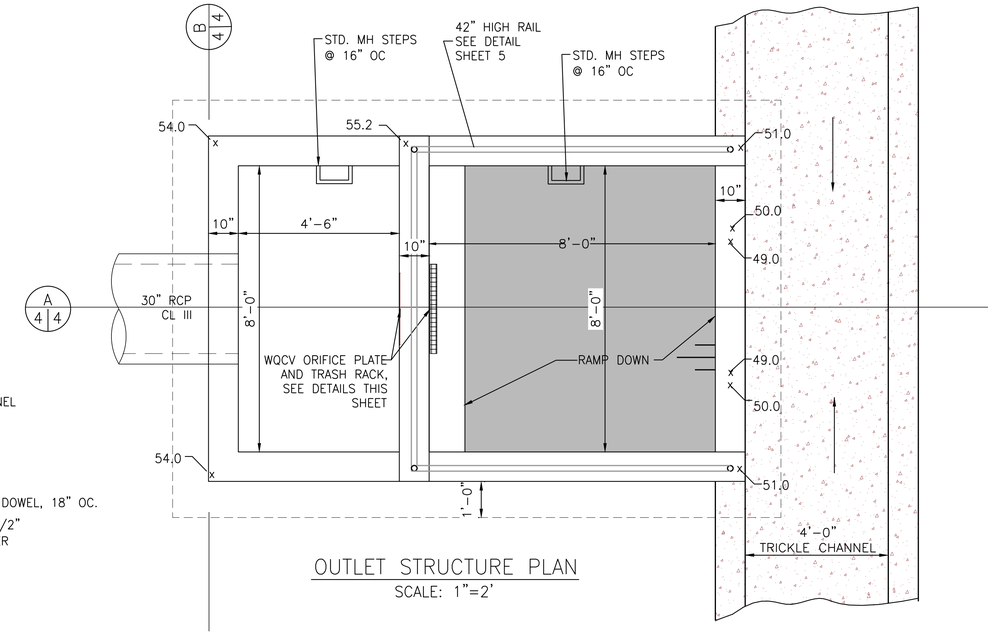

OUTLET STRUCTURE PLAN
SCALE: 1"=2'

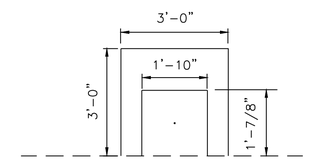

RESTRICTOR PLATE
SCALE: 1"=2'

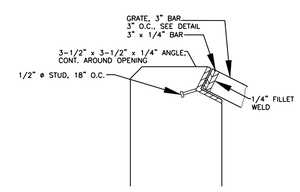

DETAIL A
SCALE: NTS

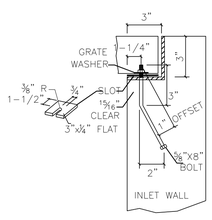

BOLT DOWN GRATE DETAIL
SCALE: NTS

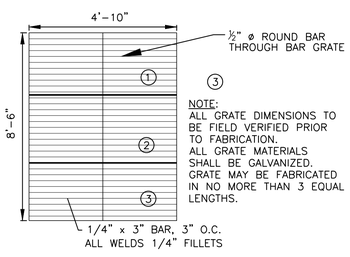

NOTE:
ALL GRATE DIMENSIONS TO BE FIELD VERIFIED PRIOR TO FABRICATION.
ALL GRATE MATERIALS SHALL BE GALVANIZED.
GRATE MAY BE FABRICATED IN NO MORE THAN 3 EQUAL LENGTHS.

MAJOR STORM GRATE DETAIL
SCALE: NTS

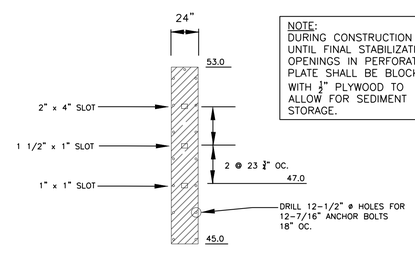

NOTE:
DURING CONSTRUCTION AND UNTIL FINAL STABILIZATION, OPENINGS IN PERFORATED PLATE SHALL BE BLOCKED WITH 1/2" PLYWOOD TO ALLOW FOR SEDIMENT STORAGE.

WQCV ORIFICE PLATE
SCALE: NTS

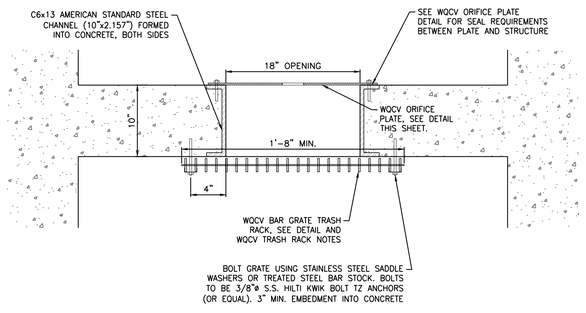

WQCV ORIFICE PLATE AND TRASH RACK
SCALE: NTS

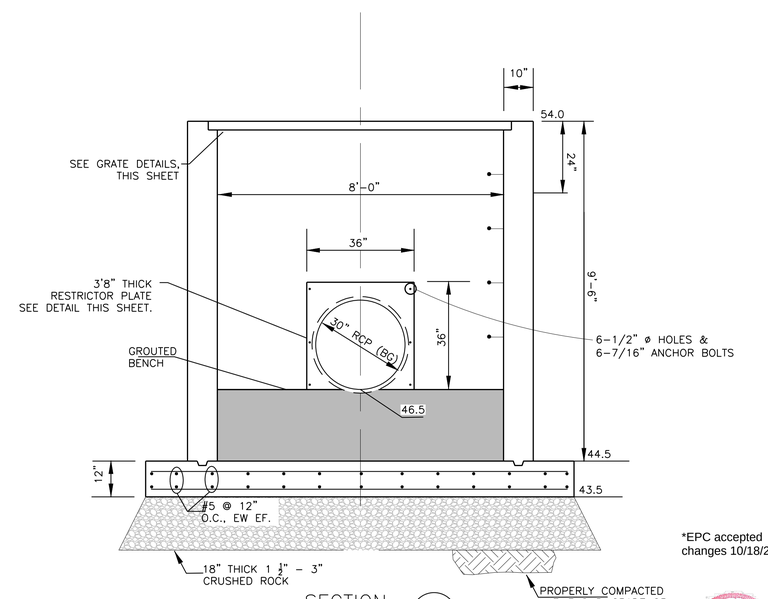

SECTION B 4|4
SCALE: 1"=2'

*EPC accepted changes 10/18/2022

EPC 6/23/2020

Kiowa Engineering Corporation
Celebrating 30 years
1604 South 21st Street
Colorado Springs, Colorado 80904
(719) 630-7342

ROCKY TOP RESOURCES
EXTENDED DETENTION BASIN OUTLET STRUCTURE DETAILS
TRACT 7 VALLEY GARDEN SUBDIVISION
1755 EAST LAS VEGAS STREET
COLORADO SPRINGS, COLORADO

Project No.:	17066
Date:	2/2020
Design:	RNW
Drawn:	EAK
Check:	RNW
Revisions:	

Void Sept 2022

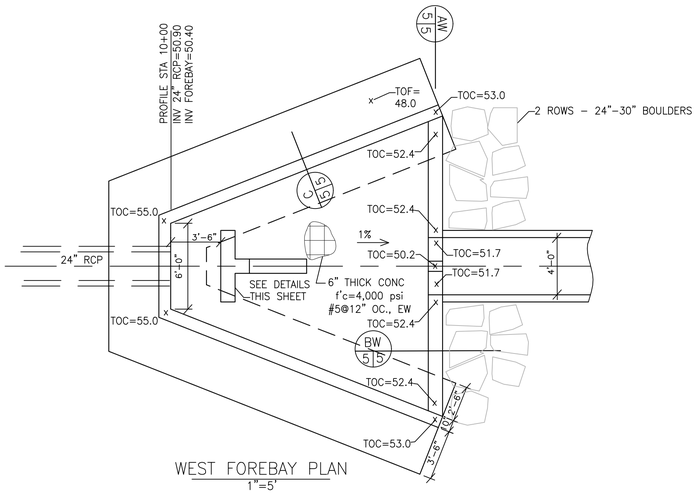

WEST FOREBAY PLAN
1"=5'

ALL REBAR TO BE EPOXY COATED.

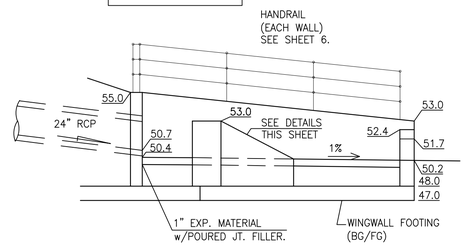

WEST FOREBAY PROFILE
1"=5'

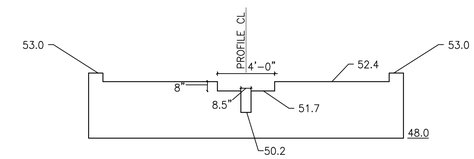

AW 5 5 WEST FOREBAY CREST
1"=5'

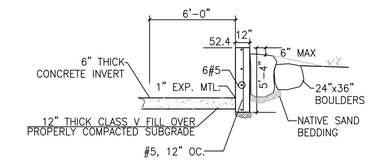

BW 5 5 SECTION
1"=5'

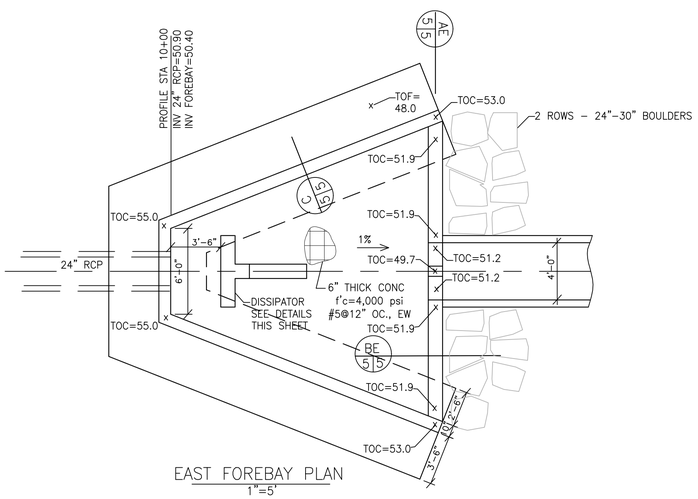

EAST FOREBAY PLAN
1"=5'

ALL REBAR TO BE EPOXY COATED.

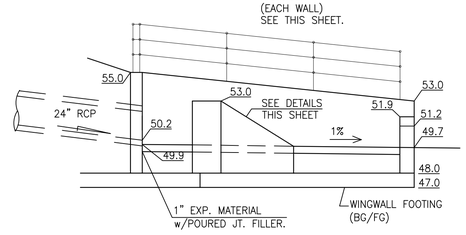

EAST FOREBAY PROFILE
1"=5'

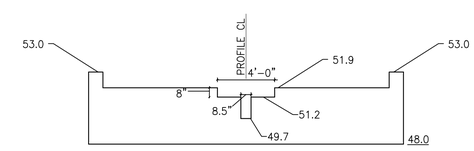

AE 5 5 EAST FOREBAY CREST
1"=5'

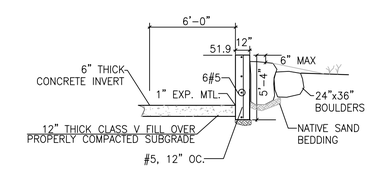

BE 5 5 SECTION
1"=5'

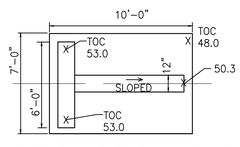

WEST DISSIPATOR STRUCTURE PLAN

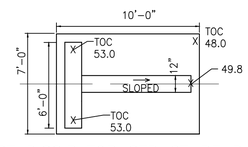

EAST DISSIPATOR STRUCTURE PLAN

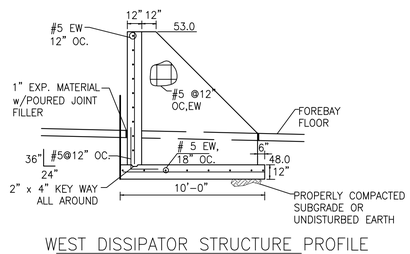

WEST DISSIPATOR STRUCTURE PROFILE
1"=5'

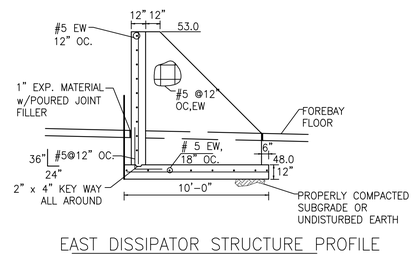

EAST DISSIPATOR STRUCTURE PROFILE
1"=5'

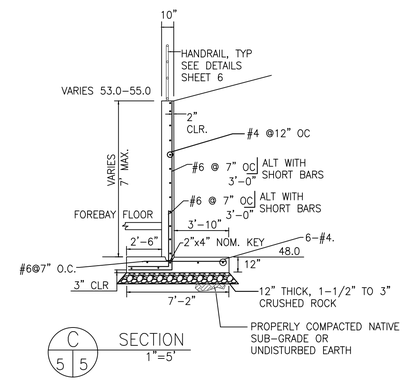

C 5 5 SECTION
1"=5'

*EPC accepted changes
10/18/2022

Know what's below.
Call before you dig.

COLORADO LICENSED
EAK A. CARTWRIGHT
09/30/2022
33365
PROFESSIONAL ENGINEER

For and on Behalf of Kiowa Engineering Corporation

Date

Kiowa Engineering Corporation
1604 South 21st Street
Colorado Springs, Colorado 80904
(719) 630-7342

ROCKY TOP RESOURCES
EXTENDED DETENTION BASIN DETAILS
TRACT 7 VALLEY GARDEN SUBDIVISION
1755 EAST LAS VEGAS STREET
COLORADO SPRINGS, COLORADO

Project No.:	17066
Date:	8/3/22
Design:	RNW
Drawn:	EAK
Check:	RNW
Revisions:	

New Sept 2022

5

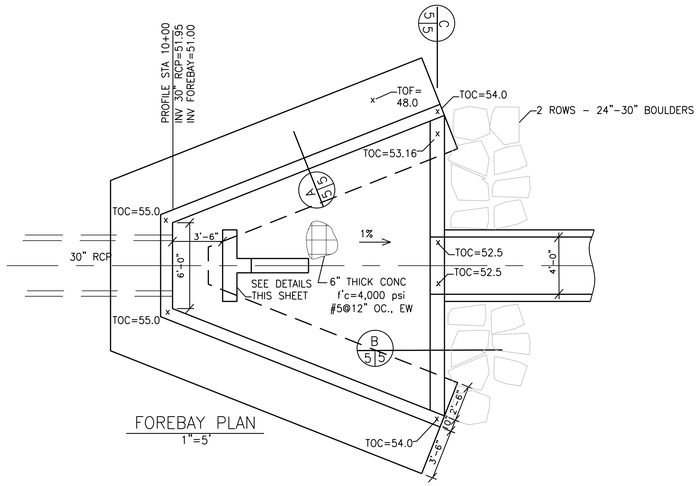

FOREBAY PLAN
1"=5'

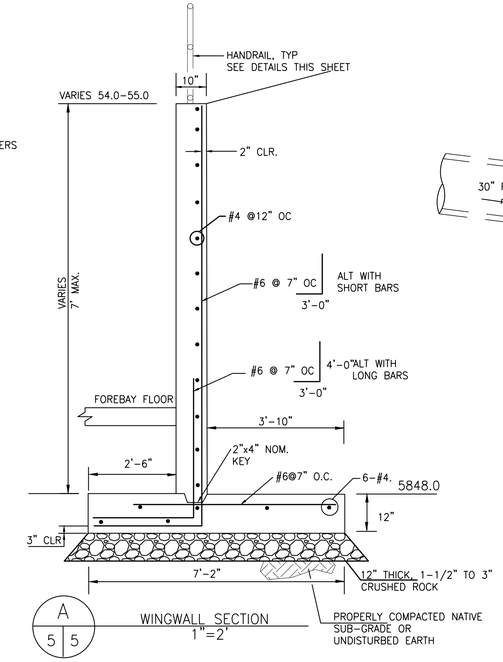

WINGWALL SECTION
1"=2'

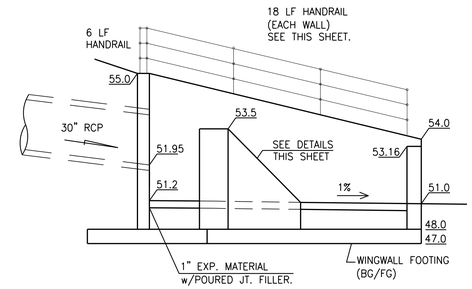

FOREBAY PROFILE
1"=5'

ALL REBAR TO BE EPOXY COATED.

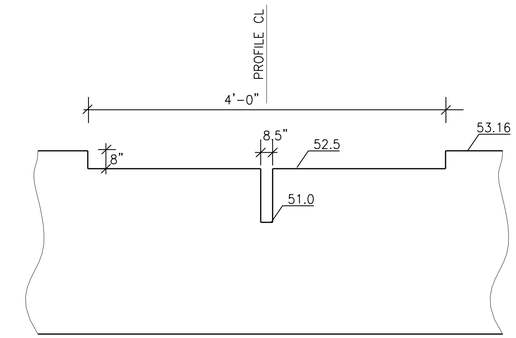

FOREBAY CREST
NTS

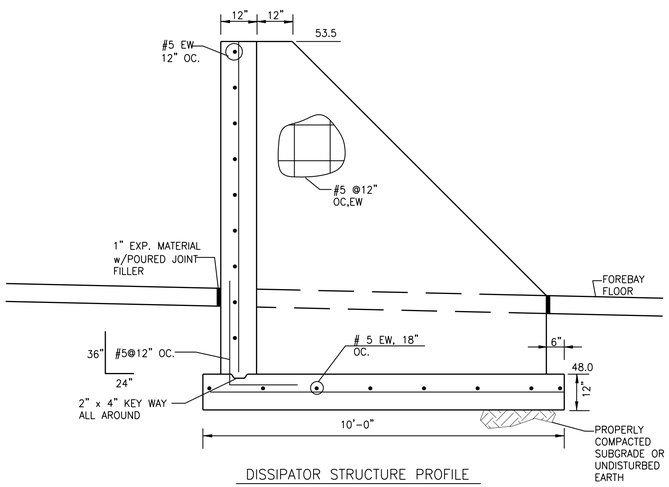

DISSIPATOR STRUCTURE PROFILE
NTS

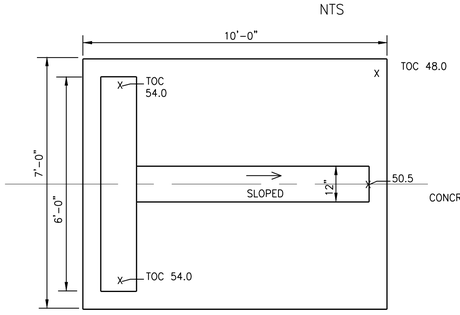

DISSIPATOR STRUCTURE PLAN
NTS

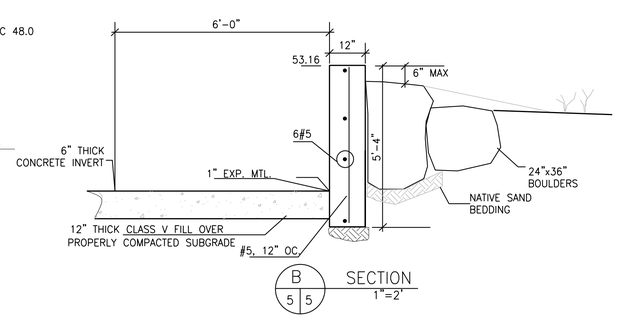

SECTION
1"=2'

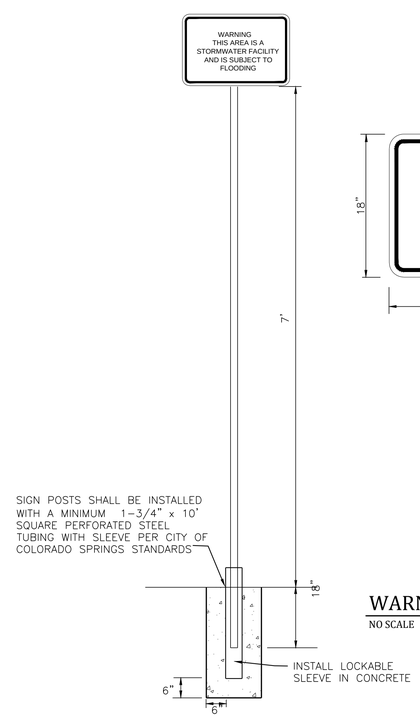

WARNING SIGN
NO SCALE

WARNING SIGN

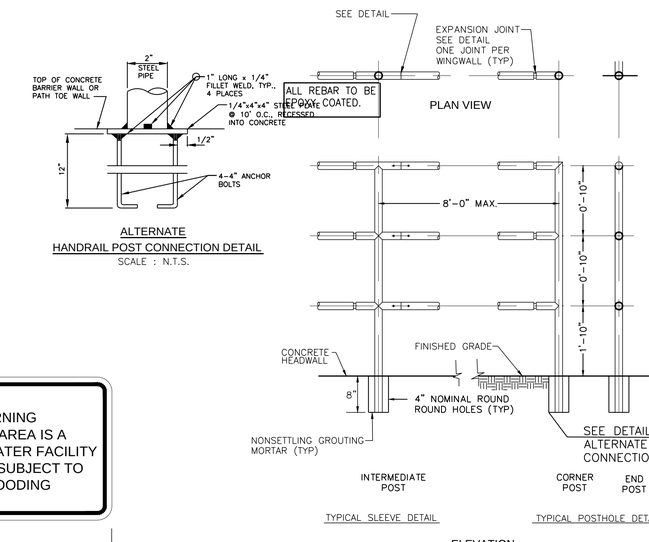

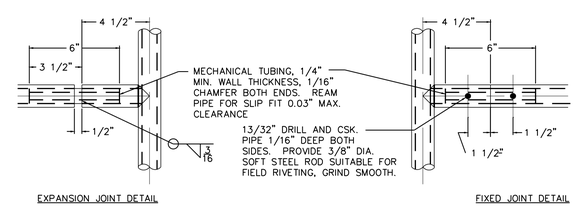

EXPANSION JOINT DETAIL

FIXED JOINT DETAIL

HANDRAIL DETAIL
SCALE: NTS

HANDRAIL NOTES

ALL HANDRAIL SHALL BE FABRICATED WITH NEW 2" DIAMETER STANDARD WEIGHT TUBING.
WELD ALL PIPE JOINTS WITH 1/8" REINFORCED WELDS AND DRESS

CORNERS AND EDGES OF ALL BARS, PLATES AND PIPE ENDS SHALL BE SANDED SMOOTH AND FREE OF BURRS.
ALL HANDRAIL MATERIAL REQUIRED FOR COMPLETE INSTALLATION SHALL BE PROVIDED.
HANDRAIL FINISH SHALL BE ONE COAT RED METAL PRIMER AND TWO COATS ENAMEL (RUSTOLEUM OR EQUIVALENT). COLOR SHALL BE APPROVED BY ENGINEER PRIOR TO APPLICATION.

*EPC accepted changes 10/18/2022

EPC 6/23/2020

Kiowa Engineering Corporation
Celebrating 30 years
1604 South 21st Street
Colorado Springs, Colorado 80904
(719) 630-7342

ROCKY TOP RESOURCES
EXTENDED DETENTION BASIN DETAILS
TRACT 7 VALLEY GARDEN SUBDIVISION
1755 EAST LAS VEGAS STREET
COLORADO SPRINGS, COLORADO

Project No.:	17066
Date:	02/2020
Design:	RNW
Drawn:	EAK
Check:	RNW
Revisions:	

Void Sept 2022

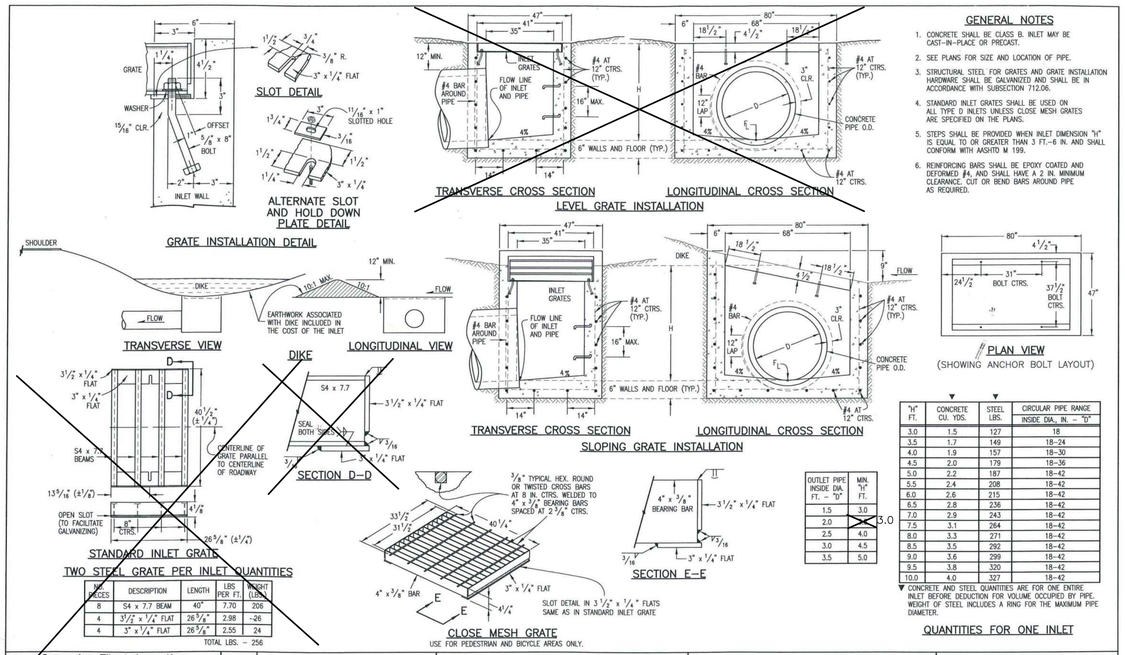

GENERAL NOTES

1. CONCRETE SHALL BE CLASS B. INLET MAY BE CAST-IN-PLACE OR PRECAST.
2. SEE PLANS FOR SIZE AND LOCATION OF PIPE.
3. STRUCTURAL STEEL FOR GRATES AND GRATE INSTALLATION HARDWARE SHALL BE GALVANIZED AND SHALL BE IN ACCORDANCE WITH SUBSECTION 712.06.
4. STANDARD INLET GRATES SHALL BE USED ON ALL TYPE D INLETS UNLESS CLOSE MESH GRATES ARE SPECIFIED ON THE PLANS.
5. STEPS SHALL BE PROVIDED WHEN INLET DIMENSION "H" IS EQUAL TO OR GREATER THAN 3 FT.–6 IN. AND SHALL CONFORM WITH AASHTO M 199.
6. REINFORCING BARS SHALL BE EPOXY COATED AND DEFORMED #4, AND SHALL HAVE A 2 IN. MINIMUM CLEARANCE. CUT OR BEND BARS AROUND PIPE AS REQUIRED.

"H" FT.	CONCRETE CU. YDS.	STEEL LBS.	CIRCULAR PIPE RANGE INSIDE DIA. IN. – "D"
3.0	1.5	127	18
3.5	1.7	149	18–24
4.0	1.9	157	18–30
4.5	2.0	179	18–36
5.0	2.2	187	18–42
5.5	2.4	208	18–42
6.0	2.6	215	18–42
6.5	2.8	236	18–42
7.0	2.9	243	18–42
7.5	3.1	264	18–42
8.0	3.3	271	18–42
8.5	3.5	292	18–42
9.0	3.6	299	18–42
9.5	3.8	320	18–42
10.0	4.0	327	18–42

▼ CONCRETE AND STEEL QUANTITIES ARE FOR ONE ENTIRE INLET BEFORE DEDUCTION FOR VOLUME OCCUPIED BY PIPE. WEIGHT OF STEEL INCLUDES A RING FOR THE MAXIMUM PIPE DIAMETER.

OUTLET PIPE INSIDE DIA. FT. – "D"	MIN. "H" FT.
1.5	3.0
2.0	3.0
2.5	4.0
3.0	4.5
3.5	5.0

NO. PIECES	DESCRIPTION	LENGTH	LBS PER FT.	WEIGHT (LBS.)
8	S4 x 7.7 BEAM	40"	7.70	208
4	3 1/2" x 1/4" FLAT	26 5/8"	2.98	26
4	3" x 1/4" FLAT	26 5/8"	2.55	24

TOTAL LBS. – 256

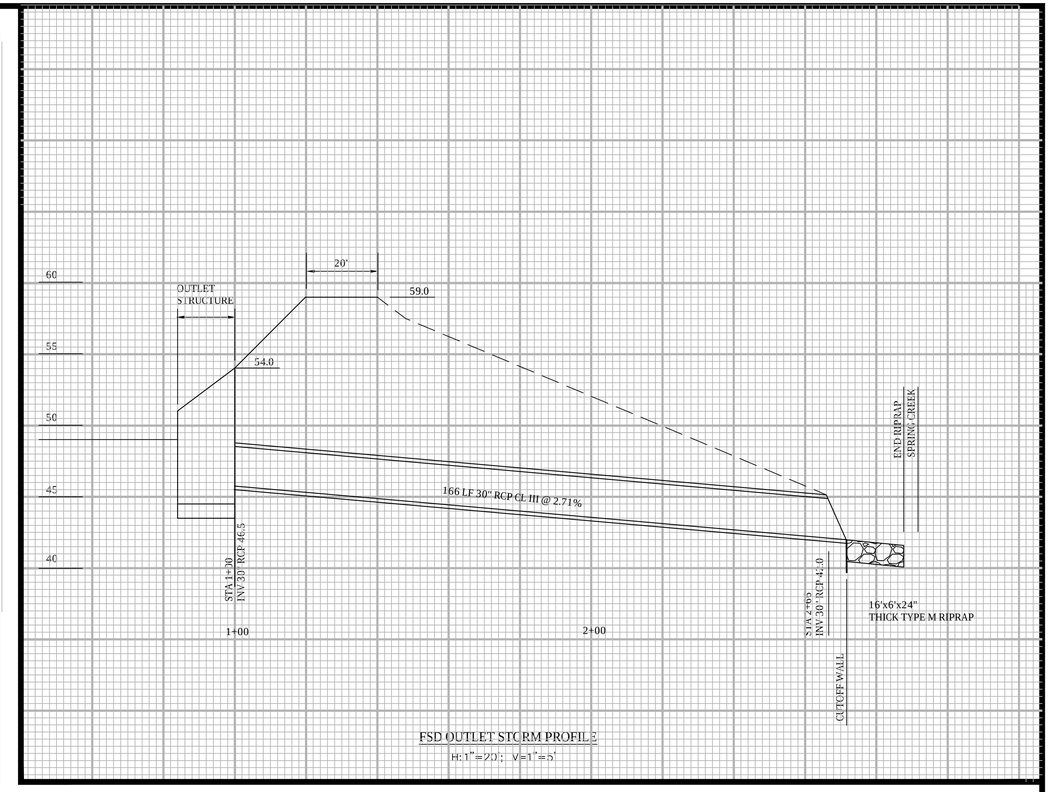

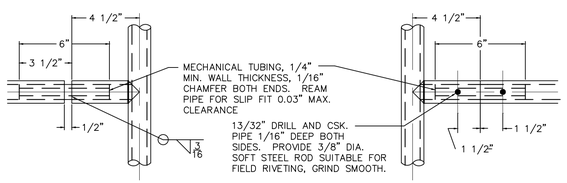

HANDRAIL DETAIL

SCALE: NTS

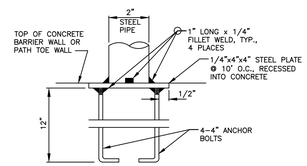

ALTERNATE
HANDRAIL POST CONNECTION DETAIL
SCALE : N.T.S.

HANDRAIL NOTES

ALL HANDRAIL SHALL BE FABRICATED WITH NEW 2" DIAMETER STANDARD WEIGHT TUBING.
WELD ALL PIPE JOINTS WITH 1/8" REINFORCED WELDS AND DRESS

CORNERS AND EDGES OF ALL BARS, PLATES AND PIPE ENDS SHALL BE SANDED SMOOTH AND FREE OF BURRS.
ALL HANDRAIL MATERIAL REQUIRED FOR COMPLETE INSTALLATION SHALL BE PROVIDED.
HANDRAIL FINISH SHALL BE ONE COAT RED METAL PRIMER AND TWO COATS ENAMEL (RUSTOLEUM OR EQUIVALENT). COLOR SHALL BE APPROVED BY ENGINEER PRIOR TO APPLICATION.

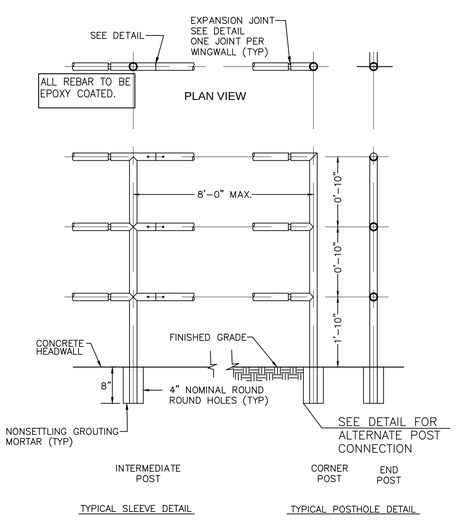

ELEVATION

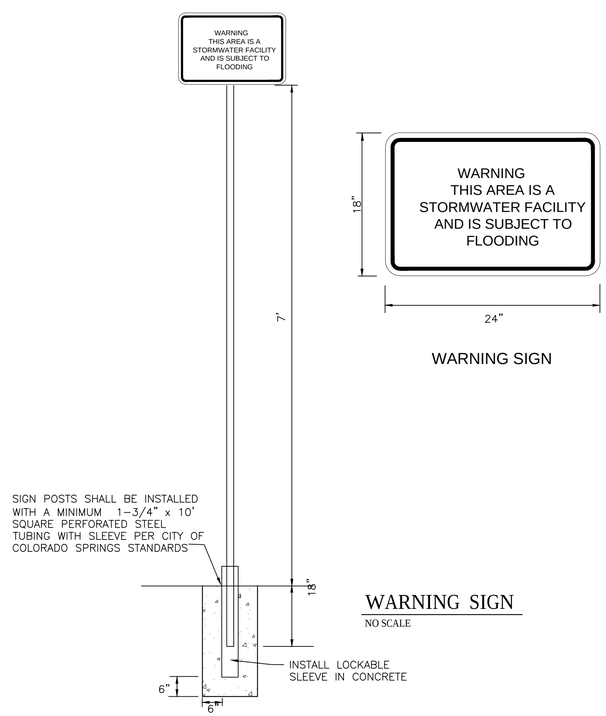

WARNING SIGN
NO SCALE

WARNING SIGN

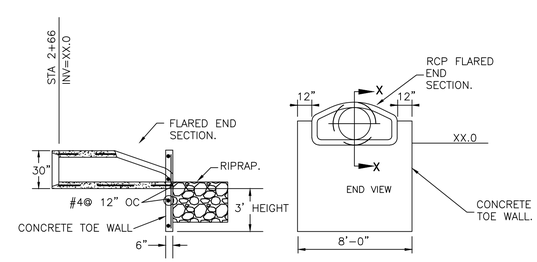

FLARED END SECTION w/ TOE WALL DETAIL
1"=5'

811 Know what's below. Call before you dig.

*EPC accepted changes 10/18/2022

COLORADO LICENSED
ISAAC A CARTWRIGHT
09/30/2022
33365
PROFESSIONAL ENGINEER

For and on Behalf of Kiowa Engineering Corporation

Date

Kiowa Engineering Corporation
1604 South 21st Street
Colorado Springs, Colorado 80904
(719) 630-7342

ROCKY TOP RESOURCES
MISCELLANEOUS AND STANDARD DETAILS
TRACT 7 VALLEY GARDEN SUBDIVISION
1755 EAST LAS VEGAS STREET
COLORADO SPRINGS, COLORADO

Project No.:	17066
	8/3/22
Design:	RNW
Drawn:	EAK
	RNW
Revisions:	

New Sept 2022

6

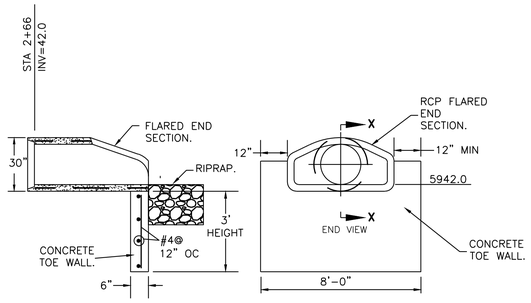

FLARED END SECTION W/TOE WALL DETAIL

NOT TO SCALE

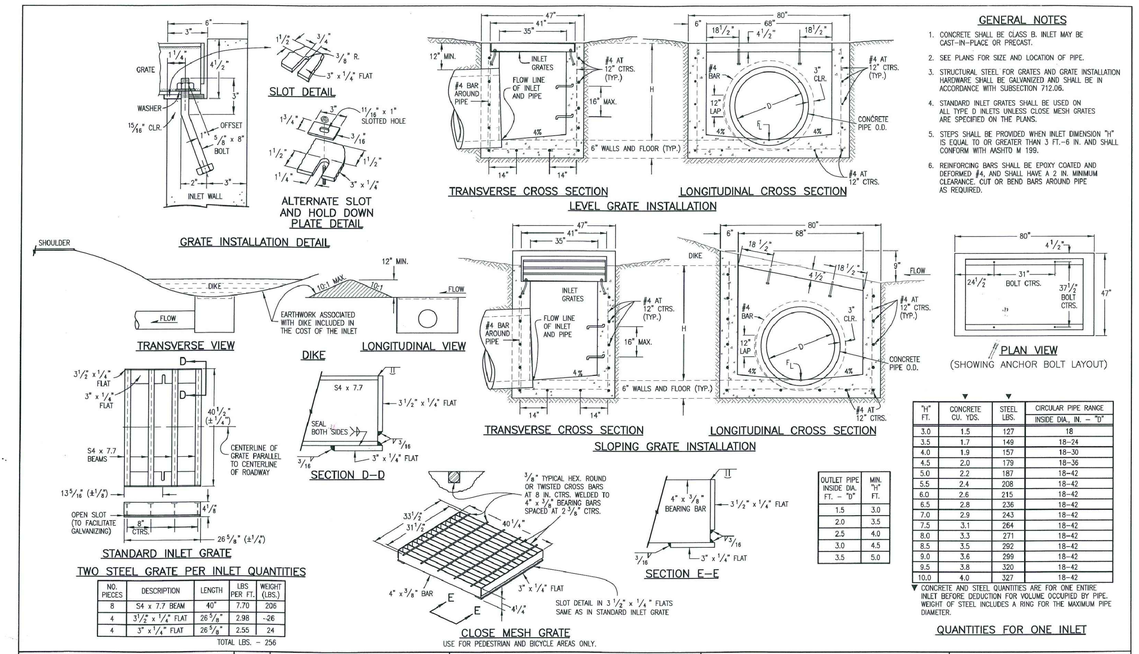

GENERAL NOTES

1. CONCRETE SHALL BE CLASS B. INLET MAY BE CAST-IN-PLACE OR PRECAST.
2. SEE PLANS FOR SIZE AND LOCATION OF PIPE.
3. STRUCTURAL STEEL FOR GRATES AND GRATE INSTALLATION HARDWARE SHALL BE GALVANIZED AND SHALL BE IN ACCORDANCE WITH SUBSECTION 712.06.
4. STANDARD INLET GRATES SHALL BE USED ON ALL TYPE D INLETS UNLESS CLOSE MESH GRATES ARE SPECIFIED ON THE PLANS.
5. STEPS SHALL BE PROVIDED WHEN INLET DIMENSION "H" IS EQUAL TO OR GREATER THAN 3 FT.-6 IN. AND SHALL CONFORM WITH AASHTO M 199.
6. REINFORCING BARS SHALL BE EPOXY COATED AND DEFORMED #4, AND SHALL HAVE A 2 IN. MINIMUM CLEARANCE. CUT OR BEND BARS AROUND PIPE AS REQUIRED.

TWO STEEL GRATE PER INLET QUANTITIES

NO. PIECES	DESCRIPTION	LENGTH	LBS PER FT.	WEIGHT (LBS.)
8	54 x 7.7 BEAM	40"	7.70	206
4	3 1/2" x 1/4" FLAT	26 5/8"	2.98	26
4	3" x 1/4" FLAT	26 5/8"	2.55	24
			TOTAL LBS. =	256

OUTLET PIPE INSIDE DIA. FT. - "D"	MIN. "H" FT.
1.5	3.0
2.0	3.5
2.5	4.0
3.0	4.5
3.5	5.0

"H" FT.	▼ CONCRETE CU. YDS.	▼ STEEL LBS.	CIRCULAR PIPE RANGE INSIDE DIA., IN. - "D"
3.0	1.5	127	18
3.5	1.7	149	18-24
4.0	1.9	157	18-30
4.5	2.0	179	18-36
5.0	2.2	187	18-42
5.5	2.4	208	18-42
6.0	2.6	215	18-42
6.5	2.8	236	18-42
7.0	2.9	243	18-42
7.5	3.1	264	18-42
8.0	3.3	271	18-42
8.5	3.5	292	18-42
9.0	3.6	299	18-42
9.5	3.8	320	18-42
10.0	4.0	327	18-42

▼ CONCRETE AND STEEL QUANTITIES ARE FOR ONE ENTIRE INLET BEFORE DEDUCTION FOR VOLUME OCCUPIED BY PIPE. WEIGHT OF STEEL INCLUDES A RING FOR THE MAXIMUM PIPE DIAMETER.

QUANTITIES FOR ONE INLET

Computer File Information	Sheet Revisions	Colorado Department of Transportation	INLET, TYPE D	STANDARD PLAN NO.
Creation Date: 07/04/06 Initials: SJR	Date: Comments	4201 East Arkansas Avenue, Denver, Colorado 80222, Phone: (303) 757-9083, Fax: (303) 757-9820		M-604-11
Last Modification Date: 07/04/06 Initials: LTA		Project Development Branch SRJ/LTA	Issued By: Project Development Branch on July 04, 2006	Sheet No. 1 of 1
Full Path: www.dot.state.co.us/DesignSupport/				
Drawing File Name: 6040110101.dwg				
CAD Ver.: MicroStation V8 Scale: Not to Scale Units: English				

TYPE D INLET

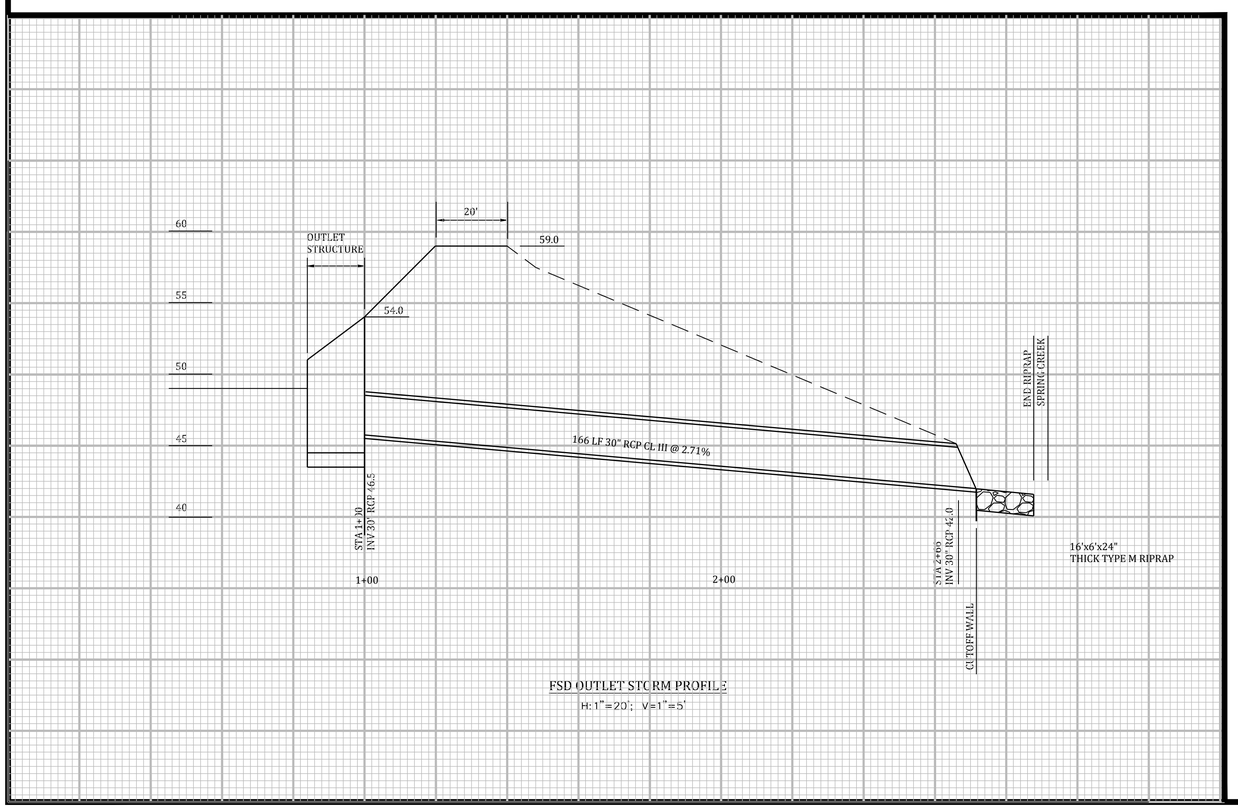

FSD OUTLET STORM PROFILE

H: 1"=20'; V=1"=5'

*EPC accepted changes 10/18/2022

EPC 6/23/2020

Kiowa Engineering Corporation
1604 South 21st Street
Colorado Springs, Colorado 80904
(719) 630-7342

ROCKY TOP RESOURCES
MISCELLANEOUS AND STANDARD DETAILS
TRACT 7 VALLEY GARDEN SUBDIVISION
1755 EAST LAS VEGAS STREET
COLORADO SPRINGS, COLORADO

Project No.:	17066
	2/2020
Design:	RNW
Drawn:	EAK
	RNW
Revisions:	

Void Sept 2022

Concrete Washout Area (CWA) MM-1

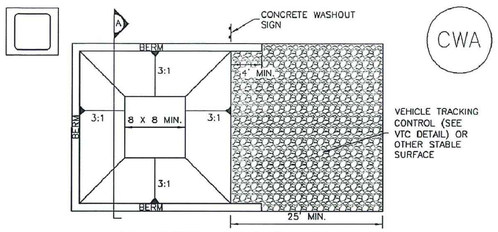

CONCRETE WASHOUT AREA PLAN

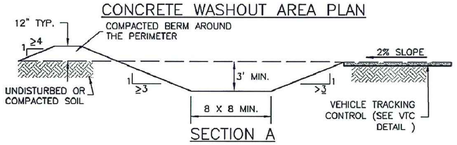

SECTION A

CWA–1. CONCRETE WASHOUT AREA

CWA INSTALLATION NOTES

1. SEE PLAN VIEW FOR:
   –CWA INSTALLATION LOCATION.

2. DO NOT LOCATE AN UNLINED CWA WITHIN 400' OF ANY NATURAL DRAINAGE PATHWAY OR WATERBODY. DO NOT LOCATE WITHIN 1,000' OF ANY WELLS OR DRINKING WATER SOURCES. IF SITE CONSTRAINTS MAKE THIS INFEASIBLE, OR IF HIGHLY PERMEABLE SOILS EXIST ON SITE, THE CWA MUST BE INSTALLED WITH AN IMPERMEABLE LINER (16 MIL MIN. THICKNESS) OR SURFACE STORAGE ALTERNATIVES USING PREFABRICATED CONCRETE WASHOUT DEVICES OR A LINED ABOVE GROUND STORAGE ARE SHOULD BE USED.

3. THE CWA SHALL BE INSTALLED PRIOR TO CONCRETE PLACEMENT ON SITE.

4. CWA SHALL INCLUDE A FLAT SUBSURFACE PIT THAT IS AT LEAST 8' BY 8' SLOPES LEADING OUT OF THE SUBSURFACE PIT SHALL BE 3:1 OR FLATTER. THE PIT SHALL BE AT LEAST 3' DEEP.

5. BERM SURROUNDING SIDES AND BACK OF THE CWA SHALL HAVE MINIMUM HEIGHT OF 1'.

6. VEHICLE TRACKING PAD SHALL BE SLOPED 2% TOWARDS THE CWA.

7. SIGNS SHALL BE PLACED AT THE CONSTRUCTION ENTRANCE, AT THE CWA, AND ELSEWHERE AS NECESSARY TO CLEARLY INDICATE THE LOCATION OF THE CWA TO OPERATORS OF CONCRETE TRUCKS AND PUMP RIGS.

8. USE EXCAVATED MATERIAL FOR PERIMETER BERM CONSTRUCTION.

CWA MAINTENANCE NOTES

1. INSPECT BMPs EACH WORKDAY, AND MAINTAIN THEM IN EFFECTIVE OPERATING CONDITION. MAINTENANCE OF BMPs SHOULD BE PROACTIVE, NOT REACTIVE. INSPECT BMPs AS SOON AS POSSIBLE (AND ALWAYS WITHIN 24 HOURS) FOLLOWING A STORM THAT CAUSES SURFACE EROSION, AND PERFORM NECESSARY MAINTENANCE.

2. FREQUENT OBSERVATIONS AND MAINTENANCE ARE NECESSARY TO MAINTAIN BMPs IN EFFECTIVE OPERATING CONDITION. INSPECTIONS AND CORRECTIVE MEASURES SHOULD BE DOCUMENTED THOROUGHLY.

3. WHERE BMPs HAVE FAILED, REPAIR OR REPLACEMENT SHOULD BE INITIATED UPON DISCOVERY OF THE FAILURE.

4. THE CWA SHALL BE REPAIRED, CLEANED, OR ENLARGED AS NECESSARY TO MAINTAIN CAPACITY FOR CONCRETE WASTE. CONCRETE MATERIALS, ACCUMULATED IN PIT, SHALL BE REMOVED ONCE THE MATERIALS HAVE REACHED A DEPTH OF 2'.

5. CONCRETE WASHOUT WATER, WASTED PIECES OF CONCRETE AND ALL OTHER DEBRIS IN THE SUBSURFACE PIT SHALL BE TRANSPORTED FROM THE JOB SITE IN A WATER–TIGHT CONTAINER AND DISPOSED OF PROPERLY.

6. THE CWA SHALL REMAIN IN PLACE UNTIL ALL CONCRETE FOR THE PROJECT IS PLACED.

7. WHEN THE CWA IS REMOVED, COVER THE DISTURBED AREA WITH TOP SOIL, SEED AND MULCH OR OTHERWISE STABILIZED IN A MANNER APPROVED BY THE LOCAL JURISDICTION.

(DETAIL ADAPTED FROM DOUGLAS COUNTY, COLORADO AND THE CITY OF PARKER, COLORADO, NOT AVAILABLE IN AUTOCAD).

NOTE: MANY JURISDICTIONS HAVE BMP DETAILS THAT VARY FROM UDFCD STANDARD DETAILS. CONSULT WITH LOCAL JURISDICTIONS AS TO WHICH DETAIL SHOULD BE USED WHEN DIFFERENCES ARE NOTED.

Standard Notes for El Paso County Grading and Erosion Control Plans

Revised 7/02/19

1. Stormwater discharges from construction sites shall not cause or threaten to cause pollution, contamination, or degradation of State Waters. All work and earth disturbance shall be done in a manner that minimizes pollution of any on-site or off-site waters, including wetlands.

2. Notwithstanding anything depicted in these plans in words or graphic representation, all design and construction related to roads, storm drainage and erosion control shall conform to the standards and requirements of the most recent version of the relevant adopted El Paso County standards, including the Land Development Code, the Engineering Criteria Manual, the Drainage Criteria Manual, and the Drainage Criteria Manual Volume 2. Any deviations from regulations and standards must be requested, and approved, in writing.

3. A separate Stormwater Management Plan (SMWP) for this project shall be completed and an Erosion and Stormwater Quality Control Permit (ESQCP) issued prior to commencing construction. Management of the SWMP during construction is the responsibility of the designated Qualified Stormwater Manager or Certified Erosion Control Inspector. The SWMP shall be located on site at all times during construction and shall be kept up to date with work progress and changes in the field.

4. Once the ESQCP is approved and a "Notice to Proceed" has been issued, the contractor may install the initial stage erosion and sediment control measures as indicated on the approved GEC. A Preconstruction Meeting between the contractor, engineer, and El Paso County will be held prior to any construction. It is the responsibility of the applicant to coordinate the meeting time and place with County staff.

5. Control measures must be installed prior to commencement of activities that could contribute pollutants to stormwater. Control measures for all slopes, channels, ditches, and disturbed land areas shall be installed immediately upon completion of the disturbance.

6. All temporary sediment and erosion control measures shall be maintained and remain in effective operating condition until permanent soil erosion control measures are implemented and final stabilization is established. All persons engaged in land disturbance activities shall assess the adequacy of control measures at the site and identify if changes to those control measures are needed to ensure the continued effective performance of the control measures. All changes to temporary sediment and erosion control measures must be incorporated into the Stormwater Management Plan.

7. Temporary stabilization shall be implemented on disturbed areas and stockpiles where ground disturbing construction activity has permanently ceased or temporarily ceased for longer than 14 days.

8. Final stabilization must be implemented at all applicable construction sites. Final stabilization is achieved when all ground disturbing activities are complete and all disturbed areas either have a uniform vegetative cover with individual plant density of 70 percent of pre-disturbance levels established or equivalent permanent alternative stabilization method is implemented. All temporary sediment and erosion control measures shall be removed upon final stabilization and before permit closure.

9. All permanent stormwater management facilities shall be installed as designed in the approved plans. Any proposed changes that affect the design or function of permanent stormwater management structures must be approved by the ECM Administrator prior to implementation.

10. Earth disturbances shall be conducted in such a manner so as to effectively minimize accelerated soil erosion and resulting sedimentation. All disturbances shall be designed, constructed, and completed so that the exposed area of any disturbed land shall be limited to the shortest practical period of time. Pre-existing vegetation shall be protected and maintained within 50 horizontal feet of a waters of the state unless shown to be infeasible and specifically requested and approved.

11. Compaction of soil must be prevented in areas designated for infiltration control measures or where final stabilization will be achieved by vegetative cover. Areas designated for infiltration control measures shall also be protected from sedimentation during construction until final stabilization is achieved. If compaction prevention is not feasible due to site constraints, all areas designated for infiltration and vegetation control measures must be loosened prior to installation of the control measure(s).

12. Any temporary or permanent facility designed and constructed for the conveyance of stormwater around, through, or from the earth disturbance area shall be a stabilized conveyance designed to minimize erosion and the discharge of sediment off site.

13. Concrete wash water shall be contained and disposed of in accordance with the SWMP. No wash water shall be discharged to or allowed to enter State Waters, including any surface or subsurface storm drainage system or facilities. Concrete washouts shall not be located in an area where shallow groundwater may be present, or within 50 feet of a surface water body, creek or stream.

14. During dewatering operations of uncontaminated ground water may be discharged on site, but shall not leave the site in the form of surface runoff unless an approved State dewatering permit is in place.

15. Erosion control blanketing or other protective covering shall be used on slopes steeper than 3:1.

16. Contractor shall be responsible for the removal of all wastes from the construction site for disposal in accordance with local and State regulatory requirements. No construction debris, tree slash, building material wastes or unused building materials shall be buried, dumped, or discharged at the site.

17. Waste materials shall not be temporarily placed or stored in the street, alley, or other public way, unless in accordance with an approved Traffic Control Plan. Control measures may be required by El Paso County Engineering if deemed necessary, based on specific conditions and circumstances.

18. Tracking of soils and construction debris off-site shall be minimized. Materials tracked off-site shall be cleaned up and properly disposed of immediately.

19. The owner/developer shall be responsible for the removal of all construction debris, dirt, trash, rock, sediment, soil, and sand that may accumulate in roads, storm drains and other drainage conveyance systems and stormwater appurtenances as a result of site development.

20. The quantity of materials stored on the project site shall be limited, as much as practical, to that quantity required to perform the work in an orderly sequence. All materials stored on-site shall be stored in a neat, orderly manner, in their original containers, with original manufacturer's labels.

21. No chemical(s) having the potential to be released in stormwater are to be stored or used onsite unless permission for the use of such chemical(s) is granted in writing by the ECM Administrator. In granting approval for the use of such chemical(s), special conditions and monitoring may be required.

22. Bulk storage of allowed petroleum products or other allowed liquid chemicals in excess of 55 gallons shall require adequate secondary containment protection to contain all spills onsite and to prevent any spilled materials from entering State Waters, any surface or subsurface storm drainage system or other facilities.

23. No person shall cause the impediment of stormwater flow in the curb and gutter or ditch except with approved sediment control measures.

24. Owner/developer and their agents shall comply with the "Colorado Water Quality Control Act" (Title 25, Article 8, CRS), and the "Clean Water Act" (33 USC 1344), in addition to the requirements of the Land Development Code, DCM Volume II and the ECM Appendix I. All appropriate permits must be obtained by the contractor prior to construction (1041, NPDES, Floodplain, 404, fugitive dust, etc.). In the event of conflicts between these requirements and other laws, rules, or regulations of other Federal, State, local, or County agencies, the most restrictive laws, rules, or regulations shall apply.

25. All construction traffic must enter/exit the site only at approved construction access points.

26. Prior to construction the permittee shall verify the location of existing utilities.

27. A water source shall be available on site during earthwork operations and shall be utilized as required to minimize dust from earthwork equipment and wind.

28. The soils report for this site has been prepared by Entech Engineering entitled "Subsurface Investigation, 1755 E. Las Vegas, Colorado Springs, Colorado, April 2019, Revised December 2019." and shall be considered a part of these plans.

29. At least ten (10) days prior to the anticipated start of construction, for projects that will disturb one (1) acre or more, the owner or operator of construction activity shall submit a permit application for stormwater discharge to the Colorado Department of Public Health and Environment, Water Quality Division. The application contains certification of completion of a stormwater management plan (SWMP), of which this Grading and Erosion Control Plan may be a part. For information or application materials contact:

Colorado Department of Public Health and Environment
Water Quality Control Division
WQCD – Permits
4300 Cherry Creek Drive South
Denver, CO 80246-1530
Attn: Permits Unit

*EPC accepted changes 10/18/2022

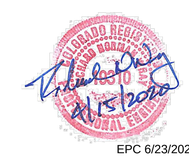

EPC 6/23/2020

Kiowa Engineering Corporation
1604 South 21st Street
Colorado Springs, Colorado 80904
(719) 630-7342

ROCKY TOP RESOURCES
GRADING & EROSION CONTROL DETAILS
TRACT 7 VALLEY GARDEN SUBDIVISION
1755 EAST LAS VEGAS STREET
COLORADO SPRINGS, COLORADO

Project No.:	17066
Date:	02/2020
Design:	RNW
Drawn:	EAK
Check:	RNW
Revisions:	

SEEDING AND MULCHING INSTALLATION NOTES

1. SEE PLAN VIEW FOR:
   - AREA OF SEEDING AND MULCHING.
   - TYPE OF SEED MIX
2. ALL BRANDS FURNISHED SHALL BE FREE FROM SUCH NOXIOUS SEEDS AS RUSSIAN OR CANADIAN THISTLE, COARSE FESCUE, EUROPEAN BINDWEED, JOHNSON GRASS, KNAP WEED AND LEAFY SPURGE.
3. THE SEEDER SHALL FURNISH TO THE CONTRACTOR A SIGNED STATEMENT CERTIFYING THAT THE SEED FURNISHED IS FROM A LOT THAT HAS BEEN TESTED BY A RECOGNIZED LABORATORY. SEED WHICH HAS BECOME WET, MOLDY OR OTHERWISE DAMAGED IN TRANSIT OR IN STORAGE WILL NOT BE ACCEPTABLE. SEED TICKETS SHALL BE PROVIDED TO REGULATING AGENCY UPON REQUEST.
4. DRILL SEEDING MIX SHALL CONFORM TO THE TABLE ON THE RIGHT.
5. IF THE SEED AVAILABLE ON THE MARKET DOES NOT MEET THE MINIMUM PURITY AND GERMINATION PERCENTAGES SPECIFIED, THE SUBCONTRACTOR MUST COMPENSATE FOR A LESSER PERCENTAGE OF PURITY OR GERMINATION BY FURNISHING SUFFICIENT ADDITIONAL SEED TO EQUAL THE SPECIFIED PRODUCT. THE TAGS FROM THE SEED MIXES MUST BE SUPPLIED TO CONTRACTOR AND FORWARDED TO THE REGULATING AGENCY'S GESC INSPECTOR.
6. THE FORMULA USED FOR DETERMINING THE QUANTITY OF PURE LIVE SEED (PLS) SHALL BE (POUNDS OF SEED) X (PURITY) X (GERMINATION) = POUNDS OF PURE LIVE SEED (PLS).
7. PERMANENT SEED MIX SHALL BE USED UNLESS OTHERWISE APPROVED BY THE REGULATING AGENCY.
8. ALL AREAS TO BE SEEDED AND MULCHED SHALL HAVE NATIVE TOPSOIL OR APPROVED SOIL AMENDMENTS SPREAD TO A DEPTH OF AT LEAST 6 INCHES (LOOSE DEPTH). HAUL ROADS AND OTHER COMPACTED AREAS SHALL BE LOOSENED TO A DEPTH OF 6 INCHES PRIOR TO SPREADING TOPSOIL.
9. SOIL IS TO BE THOROUGHLY LOOSENED (TILLED) TO A DEPTH OF AT LEAST 6 INCHES PRIOR TO SEEDING. THE TOP 6 INCHES OF THE SEED BED SHALL BE FREE OF ROCKS GREATER THAN 4 INCHES AND SOIL CLODS GREATER THAN 2 INCHES. SEEDING OVER ANY COMPACTED AREAS THAT HAVEN'T BEEN THOROUGHLY LOOSENED SHALL BE REJECTED.
10. SEED IS TO BE APPLIED USING A MECHANICAL DRILL TO A DEPTH OF 1/4 INCH. ROW SPACING SHALL BE NO MORE THAN 6 INCHES. MATERIAL USED FOR MULCH SHALL CONSIST OF LONG-STEMMED STRAW. AT LEAST 50 PERCENT OF THE MULCH, BY WEIGHT, SHALL BE 10 INCHES OR MORE IN LENGTH. MULCH SHALL BE APPLIED AND MECHANICALLY ANCHORED TO A DEPTH OF AT LEAST 2 INCHES. MULCH SHALL BE APPLIED AT A RATE OF 4000 LB. OF STRAW PER ACRE.
11. IF THE PERMITTEE DEMONSTRATES TO THE REGULATING AGENCY THAT IT IS NOT POSSIBLE TO DRILL SEED, SEED IS TO BE UNIFORMLY BROADCAST AT TWO TIMES THE DRILLED RATE, THEN LIGHTLY HARROWED TO PROVIDE A SEED DEPTH OF APPROXIMATELY 1/4 INCH, THEN ROLLED TO COMPACT, THEN MULCHED AS SPECIFIED ABOVE.
12. SEEDING AND MULCHING SHALL BE COMPLETED WITHIN 30 DAYS OF INITIAL EXPOSURE OR 7 DAYS AFTER GRADING IS SUBSTANTIALLY COMPLETE IN A GIVEN AREA (AS DEFINED BY THE REGULATING AGENCY). THIS MAY REQUIRE MULTIPLE MOBILIZATIONS FOR SEEDING AND MULCHING.
13. MULCH SHALL BE APPLIED WITHIN 24 HOURS OF SEEDING.
14. TACKIFIER SHOULD BE UTILIZED TO HELP WITH STRAW DISPLACEMENT.

SEEDING AND MULCHING MAINTENANCE NOTES

1. SEEDED AND MULCHED AREAS SHALL BE INSPECTED FOR REQUIRED COVERAGE MONTHLY FOR A PERIOD OF TWO YEARS FOLLOWING INITIAL SEEDING. REPAIRS AND RE-SEEDING AND MULCHING SHALL BE UNDERTAKEN AFTER THE FIRST GROWING SEASON FOR ANY AREAS FAILING TO MEET THE REQUIRED COVERAGE.
2. REQUIRED COVERAGE FOR STANDARD, OPEN SPACE AND LOW GROWTH SEED MIXES SHALL BE DEFINED AS FOLLOWS:
   1. THREE (3) PLANTS PER SQUARE FOOT WITH A MINIMUM HEIGHT OF 3 INCHES. THE 3 PLANTS PER SQUARE FOOT SHALL BE OF THE VARIETY AND SPECIES FOUND IN THE DOUGLAS COUNTY-APPROVED MIX.
   2. NO BARE AREAS LARGER THAN 4 SQUARE FEET (TWO-FEET BY TWO-FEET OR EQUIVALENT).
   3. FREE OF ERODED AREAS.
   4. FREE FROM INFESTATION OF NOXIOUS WEEDS IN ACCORDANCE WITH SECTION 6.4 OF THE GESC CRITERIA MANUAL.
3. REQUIRED COVERAGE FOR TURF GRASS AREAS SHALL BE DEFINED AS FOLLOWS:
   1. AT LEAST 80% VEGETATIVE COVER OF GRASS SPECIES PLANTED.
   2. NO BARE AREAS LARGER THAN 4 SQUARE FEET (TWO-FEET BY TWO-FEET OR EQUIVALENT.
   3. FREE OF ERODED AREAS.
   4. FREE FROM INFESTATION OF NOXIOUS WEEDS IN ACCORDANCE WITH SECTION 6.4 OF THE GESC CRITERIA MANUAL.
4. RILL AND GULLY EROSION SHALL BE FILLED WITH TOPSOIL PRIOR TO RESEEDING. THE RESEEDING METHOD SHALL BE APPROVED BY THE COUNTY.

SEED MIX

AREAS DISTURBED BY THE EARTHWORK SHALL BE PERMANENTLY REVEGETATED WITH NATIVE GRASSES. NATIVE SEED MIX FOR THIS PROJECT SHALL BE AS FOLLOWS:

SPECIES		pls/acre
WESTERN WHEAT GRASS	*Pasopyrum smithii*	3.0
SIDEOATS GRAMA	*Boutelova curtipendula*	2.0
SLENDER WHEAT GRASS	*Elymus trachycaulus*	2.0
LITTLE BLUESTEM	*Schizachyrium scoparium*	2.0
BLUE GRAMA	*Boutelova gracilis*	0.5
SWITCH GRASS	*Panicum virgatum*	2.0
JUNE GRASS	*Koeleria cristata*	0.5
SAND DROPSEED	*Sporobolus cryptandrus*	0.5
		12.5 lbs

SEEDING APPLICATION: DRILL SEED 1/4" TO 1/2" INTO TOPSOIL. IN AREAS INACCESSIBLE TO A DRILL, HAND BROADCAST AT DOUBLE THE RATE AND RAKE 1/4" TO 1/2" INTO THE TOPSOIL.
MULCHING APPLICATION: 1-1/2 TONS NATIVE HAY PER ACRE, MECHANICALLY CRIMPED INTO THE TOPSOIL OR HYDROMULCH.

SEEDING AND MULCH (SM)
NTS

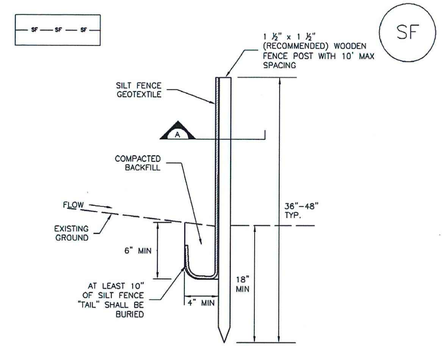

SILT FENCE

SECTION A

SF-1. SILT FENCE

SILT FENCE INSTALLATION NOTES

1. SILT FENCE MUST BE PLACED AWAY FROM THE TOE OF THE SLOPE TO ALLOW FOR WATER PONDING. SILT FENCE AT THE TOE OF A SLOPE SHOULD BE INSTALLED IN A FLAT LOCATION AT LEAST SEVERAL FEET (2-5 FT) FROM THE TOE OF THE SLOPE TO ALLOW ROOM FOR PONDING AND DEPOSITION.

2. A UNIFORM 6" X 4" ANCHOR TRENCH SHALL BE EXCAVATED USING TRENCHER OR SILT FENCE INSTALLATION DEVICE. NO ROAD GRADERS, BACKHOES, OR SIMILAR EQUIPMENT SHALL BE USED.

3. COMPACT ANCHOR TRENCH BY HAND WITH A "JUMPING JACK" OR BY WHEEL ROLLING. COMPACTION SHALL BE SUCH THAT SILT FENCE RESISTS BEING PULLED OUT OF ANCHOR TRENCH BY HAND.

4. SILT FENCE SHALL BE PULLED TIGHT AS IT IS ANCHORED TO THE STAKES. THERE SHOULD BE NO NOTICEABLE SAG BETWEEN STAKES AFTER IT HAS BEEN ANCHORED TO THE STAKES.

5. SILT FENCE FABRIC SHALL BE ANCHORED TO THE STAKES USING 1" HEAVY DUTY STAPLES OR NAILS WITH 1" HEADS. STAPLES AND NAILS SHOULD BE PLACED 3" ALONG THE FABRIC DOWN THE STAKE.

6. AT THE END OF A RUN OF SILT FENCE ALONG A CONTOUR, THE SILT FENCE SHOULD BE TURNED PERPENDICULAR TO THE CONTOUR TO CREATE A "J-HOOK." THE "J-HOOK" EXTENDING PERPENDICULAR TO THE CONTOUR SHOULD BE OF SUFFICIENT LENGTH TO KEEP RUNOFF FROM FLOWING AROUND THE END OF THE SILT FENCE (TYPICALLY 10' - 20').

7. SILT FENCE SHALL BE INSTALLED PRIOR TO ANY LAND DISTURBING ACTIVITIES.

SILT FENCE MAINTENANCE NOTES

1. INSPECT BMPs EACH WORKDAY, AND MAINTAIN THEM IN EFFECTIVE OPERATING CONDITION. MAINTENANCE OF BMPs SHOULD BE PROACTIVE, NOT REACTIVE. INSPECT BMPs AS SOON AS POSSIBLE (AND ALWAYS WITHIN 24 HOURS) FOLLOWING A STORM THAT CAUSES SURFACE EROSION, AND PERFORM NECESSARY MAINTENANCE.

2. FREQUENT OBSERVATIONS AND MAINTENANCE ARE NECESSARY TO MAINTAIN BMPs IN EFFECTIVE OPERATING CONDITION. INSPECTIONS AND CORRECTIVE MEASURES SHOULD BE DOCUMENTED THOROUGHLY.

3. WHERE BMPs HAVE FAILED, REPAIR OR REPLACEMENT SHOULD BE INITIATED UPON DISCOVERY OF THE FAILURE.

4. SEDIMENT ACCUMULATED UPSTREAM OF THE SILT FENCE SHALL BE REMOVED AS NEEDED TO MAINTAIN THE FUNCTIONALITY OF THE BMP, TYPICALLY WHEN DEPTH OF ACCUMULATED SEDIMENTS IS APPROXIMATELY 6".

5. REPAIR OR REPLACE SILT FENCE WHEN THERE ARE SIGNS OF WEAR, SUCH AS SAGGING, TEARING, OR COLLAPSE.

6. SILT FENCE IS TO REMAIN IN PLACE UNTIL THE UPSTREAM DISTURBED AREA IS STABILIZED AND APPROVED BY THE LOCAL JURISDICTION, OR IS REPLACED BY AN EQUIVALENT PERIMETER SEDIMENT CONTROL BMP.

7. WHEN SILT FENCE IS REMOVED, ALL DISTURBED AREAS SHALL BE COVERED WITH TOPSOIL, SEEDED AND MULCHED OR OTHERWISE STABILIZED AS APPROVED BY LOCAL JURISDICTION.

(DETAIL ADAPTED FROM TOWN OF PARKER, COLORADO AND CITY OF AURORA, NOT AVAILABLE IN AUTOCAD)

NOTE: MANY JURISDICTIONS HAVE BMP DETAILS THAT VARY FROM UDFCD STANDARD DETAILS. CONSULT WITH LOCAL JURISDICTIONS AS TO WHICH DETAIL SHOULD BE USED WHEN DIFFERENCES ARE NOTED.

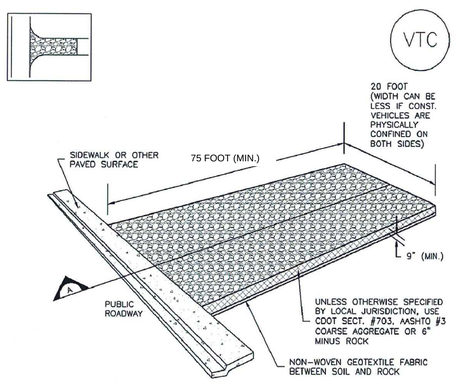

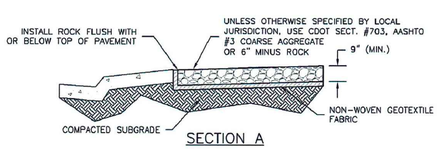

SECTION A

VTC-1. AGGREGATE VEHICLE TRACKING CONTROL

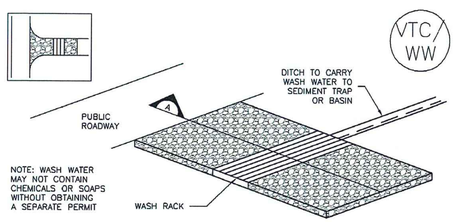

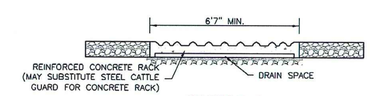

SECTION A

VTC-2. AGGREGATE VEHICLE TRACKING CONTROL WITH WASH RACK

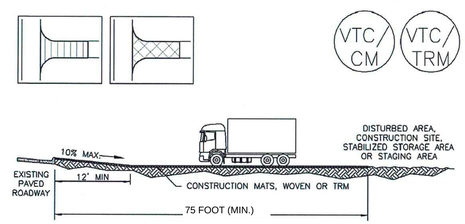

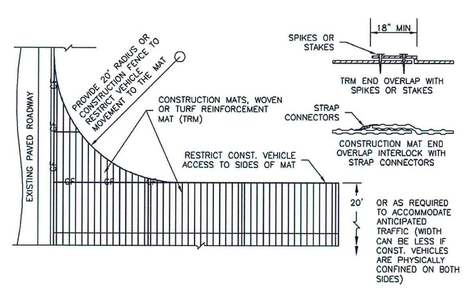

VTC-3. VEHICLE TRACKING CONTROL W/ CONSTRUCTION MAT OR TURF REINFORCEMENT MAT (TRM)

STABILIZED CONSTRUCTION ENTRANCE/EXIT INSTALLATION NOTES

1. SEE PLAN VIEW FOR
   -LOCATION OF CONSTRUCTION ENTRANCE(S)/EXIT(S).
   -TYPE OF CONSTRUCTION ENTRANCE(S)/EXITS(S) (WITH/WITHOUT WHEEL WASH, CONSTRUCTION MAT OR TRM).

2. CONSTRUCTION MAT OR TRM STABILIZED CONSTRUCTION ENTRANCES ARE ONLY TO BE USED ON SHORT DURATION PROJECTS (TYPICALLY RANGING FROM A WEEK TO A MONTH) WHERE THERE WILL BE LIMITED VEHICULAR ACCESS.

3. A STABILIZED CONSTRUCTION ENTRANCE/EXIT SHALL BE LOCATED AT ALL ACCESS POINTS WHERE VEHICLES ACCESS THE CONSTRUCTION SITE FROM PAVED RIGHT-OF-WAYS.

4. STABILIZED CONSTRUCTION ENTRANCE/EXIT SHALL BE INSTALLED PRIOR TO ANY LAND DISTURBING ACTIVITIES.

5. A NON-WOVEN GEOTEXTILE FABRIC SHALL BE PLACED UNDER THE STABILIZED CONSTRUCTION ENTRANCE/EXIT PRIOR TO THE PLACEMENT OF ROCK.

6. UNLESS OTHERWISE SPECIFIED BY LOCAL JURISDICTION, ROCK SHALL CONSIST OF DOT SECT. #703, AASHTO #3 COARSE AGGREGATE OR 6" (MINUS) ROCK.

STABILIZED CONSTRUCTION ENTRANCE/EXIT MAINTENANCE NOTES

1. INSPECT BMPs EACH WORKDAY, AND MAINTAIN THEM IN EFFECTIVE OPERATING CONDITION. MAINTENANCE OF BMPs SHOULD BE PROACTIVE, NOT REACTIVE. INSPECT BMPs AS SOON AS POSSIBLE (AND ALWAYS WITHIN 24 HOURS) FOLLOWING A STORM THAT CAUSES SURFACE EROSION, AND PERFORM NECESSARY MAINTENANCE.

2. FREQUENT OBSERVATIONS AND MAINTENANCE ARE NECESSARY TO MAINTAIN BMPs IN EFFECTIVE OPERATING CONDITION. INSPECTIONS AND CORRECTIVE MEASURES SHOULD BE DOCUMENTED THOROUGHLY.

3. WHERE BMPs HAVE FAILED, REPAIR OR REPLACEMENT SHOULD BE INITIATED UPON DISCOVERY OF THE FAILURE.

4. ROCK SHALL BE REAPPLIED OR REGRADED AS NECESSARY TO THE STABILIZED ENTRANCE/EXIT TO MAINTAIN A CONSISTENT DEPTH.

5. SEDIMENT TRACKED ONTO PAVED ROADS IS TO BE REMOVED THROUGHOUT THE DAY AND AT THE END OF THE DAY BY SHOVELING OR SWEEPING. SEDIMENT MAY NOT BE WASHED DOWN STORM SEWER DRAINS.

NOTE: MANY JURISDICTIONS HAVE BMP DETAILS THAT VARY FROM UDFCD STANDARD DETAILS. CONSULT WITH LOCAL JURISDICTIONS AS TO WHICH DETAIL SHOULD BE USED WHEN DIFFERENCES ARE NOTED.

(DETAILS ADAPTED FROM CITY OF BROOMFIELD, COLORADO, NOT AVAILABLE IN AUTOCAD)

*EPC accepted changes 10/18/2022

EPC 6/23/2020

Kiowa Engineering Corporation
1604 South 21st Street
Colorado Springs, Colorado 80904
(719)630-7342

ROCKY TOP RESOURCES
GRADING & EROSION CONTROL DETAILS
TRACT 7 VALLEY GARDEN SUBDIVISION
1755 EAST LAS VEGAS STREET
COLORADO SPRINGS, COLORADO

Project No.:	17066
Date:	02/2020
Design:	RNW
Drawn:	EAK
Check:	RNW
Revisions:	

Stabilized Staging Area (SSA) SM-6

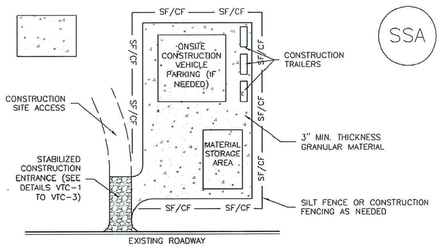

SSA-1. STABILIZED STAGING AREA

STABILIZED STAGING AREA INSTALLATION NOTES

1. SEE PLAN VIEW FOR
   -LOCATION OF STAGING AREA(S).
   -CONTRACTOR MAY ADJUST LOCATION AND SIZE OF STAGING AREA WITH APPROVAL FROM THE LOCAL JURISDICTION.

2. STABILIZED STAGING AREA SHOULD BE APPROPRIATE FOR THE NEEDS OF THE SITE. OVERSIZING RESULTS IN A LARGER AREA TO STABILIZE FOLLOWING CONSTRUCTION.

3. STAGING AREA SHALL BE STABILIZED PRIOR TO OTHER OPERATIONS ON THE SITE.

4. THE STABILIZED STAGING AREA SHALL CONSIST OF A MINIMUM 3" THICK GRANULAR MATERIAL.

5. UNLESS OTHERWISE SPECIFIED BY LOCAL JURISDICTION, ROCK SHALL CONSIST OF DOT SECT. #703, AASHTO #3 COARSE AGGREGATE OR 6" (MINUS) ROCK.

6. ADDITIONAL PERIMETER BMPs MAY BE REQUIRED INCLUDING BUT NOT LIMITED TO SILT FENCE AND CONSTRUCTION FENCING.

STABILIZED STAGING AREA MAINTENANCE NOTES

1. INSPECT BMPs EACH WORKDAY, AND MAINTAIN THEM IN EFFECTIVE OPERATING CONDITION. MAINTENANCE OF BMPs SHOULD BE PROACTIVE, NOT REACTIVE. INSPECT BMPs AS SOON AS POSSIBLE (AND ALWAYS WITHIN 24 HOURS) FOLLOWING A STORM THAT CAUSES SURFACE EROSION, AND PERFORM NECESSARY MAINTENANCE.

2. FREQUENT OBSERVATIONS AND MAINTENANCE ARE NECESSARY TO MAINTAIN BMPs IN EFFECTIVE OPERATING CONDITION. INSPECTIONS AND CORRECTIVE MEASURES SHOULD BE DOCUMENTED THOROUGHLY.

3. WHERE BMPs HAVE FAILED, REPAIR OR REPLACEMENT SHOULD BE INITIATED UPON DISCOVERY OF THE FAILURE.

4. ROCK SHALL BE REAPPLIED OR REGRADED AS NECESSARY IF RUTTING OCCURS OR UNDERLYING SUBGRADE BECOMES EXPOSED.

Stabilized Staging Area (SSA) SM-6

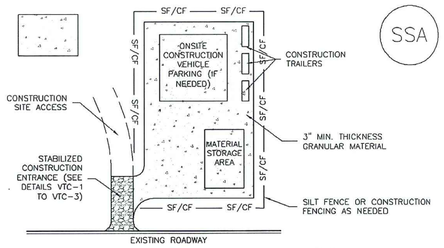

SSA-1. STABILIZED STAGING AREA

STABILIZED STAGING AREA INSTALLATION NOTES

1. SEE PLAN VIEW FOR
   -LOCATION OF STAGING AREA(S).
   -CONTRACTOR MAY ADJUST LOCATION AND SIZE OF STAGING AREA WITH APPROVAL FROM THE LOCAL JURISDICTION.

2. STABILIZED STAGING AREA SHOULD BE APPROPRIATE FOR THE NEEDS OF THE SITE. OVERSIZING RESULTS IN A LARGER AREA TO STABILIZE FOLLOWING CONSTRUCTION.

3. STAGING AREA SHALL BE STABILIZED PRIOR TO OTHER OPERATIONS ON THE SITE.

4. THE STABILIZED STAGING AREA SHALL CONSIST OF A MINIMUM 3" THICK GRANULAR MATERIAL.

5. UNLESS OTHERWISE SPECIFIED BY LOCAL JURISDICTION, ROCK SHALL CONSIST OF DOT SECT. #703, AASHTO #3 COARSE AGGREGATE OR 6" (MINUS) ROCK.

6. ADDITIONAL PERIMETER BMPs MAY BE REQUIRED INCLUDING BUT NOT LIMITED TO SILT FENCE AND CONSTRUCTION FENCING.

STABILIZED STAGING AREA MAINTENANCE NOTES

1. INSPECT BMPs EACH WORKDAY, AND MAINTAIN THEM IN EFFECTIVE OPERATING CONDITION. MAINTENANCE OF BMPs SHOULD BE PROACTIVE, NOT REACTIVE. INSPECT BMPs AS SOON AS POSSIBLE (AND ALWAYS WITHIN 24 HOURS) FOLLOWING A STORM THAT CAUSES SURFACE EROSION, AND PERFORM NECESSARY MAINTENANCE.

2. FREQUENT OBSERVATIONS AND MAINTENANCE ARE NECESSARY TO MAINTAIN BMPs IN EFFECTIVE OPERATING CONDITION. INSPECTIONS AND CORRECTIVE MEASURES SHOULD BE DOCUMENTED THOROUGHLY.

3. WHERE BMPs HAVE FAILED, REPAIR OR REPLACEMENT SHOULD BE INITIATED UPON DISCOVERY OF THE FAILURE.

4. ROCK SHALL BE REAPPLIED OR REGRADED AS NECESSARY IF RUTTING OCCURS OR UNDERLYING SUBGRADE BECOMES EXPOSED.

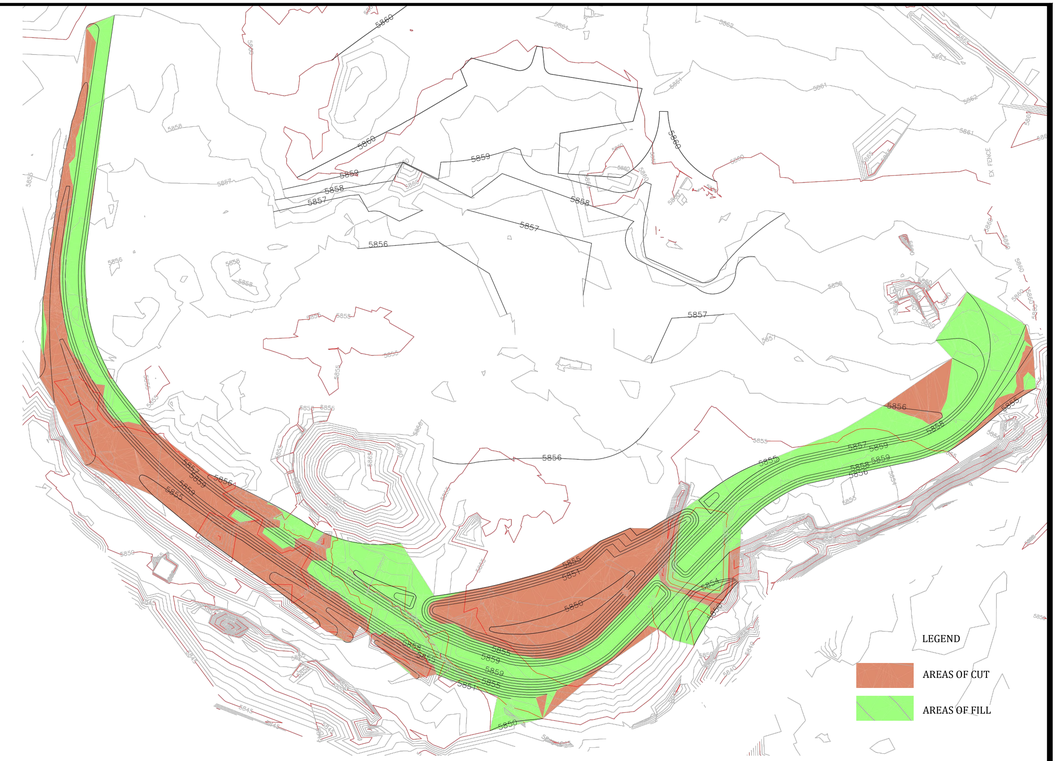

AREAS OF CUT AND FILL

NTS

SC-6 Inlet Protection (IP)

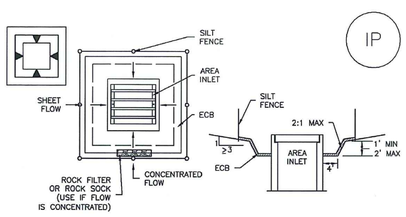

IP-5. OVEREXCAVATION INLET PROTECTION

OVEREXCAVATION INLET PROTECTION INSTALLATION NOTES

1. THIS FORM OF INLET PROTECTION IS PRIMARILY APPLICABLE FOR SITES THAT HAVE NOT YET REACHED FINAL GRADE AND SHOULD BE USED ONLY FOR INLETS WITH A RELATIVELY SMALL CONTRIBUTING DRAINAGE AREA.

2. WHEN USING FOR CONCENTRATED FLOWS, SHAPE BASIN IN 2:1 RATIO WITH LENGTH ORIENTED TOWARDS DIRECTION OF FLOW.

3. SEDIMENT MUST BE PERIODICALLY REMOVED FROM THE OVEREXCAVATED AREA.

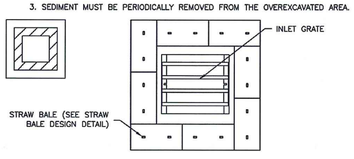

IP-6. STRAW BALE FOR SUMP INLET PROTECTION

STRAW BALE BARRIER INLET PROTECTION INSTALLATION NOTES

1. SEE STRAW BALE DESIGN DETAIL FOR INSTALLATION REQUIREMENTS.

2. BALES SHALL BE PLACED IN A SINGLE ROW AROUND THE INLET WITH ENDS OF BALES TIGHTLY ABUTTING ONE ANOTHER.

SC-6 Inlet Protection (IP)

GENERAL INLET PROTECTION INSTALLATION NOTES

1. SEE PLAN VIEW FOR:
   -LOCATION OF INLET PROTECTION.
   -TYPE OF INLET PROTECTION (IP.1, IP.2, IP.3, IP.4, IP.5, IP.6)

2. INLET PROTECTION SHALL BE INSTALLED PROMPTLY AFTER INLET CONSTRUCTION OR PAVING IS COMPLETE (TYPICALLY WITHIN 48 HOURS). IF A RAINFALL/RUNOFF EVENT IS FORECAST, INSTALL INLET PROTECTION PRIOR TO ONSET OF EVENT.

3. MANY JURISDICTIONS HAVE BMP DETAILS THAT VARY FROM UDFCD STANDARD DETAILS. CONSULT WITH LOCAL JURISDICTIONS AS TO WHICH DETAIL SHOULD BE USED WHEN DIFFERENCES ARE NOTED.

INLET PROTECTION MAINTENANCE NOTES

1. INSPECT BMPs EACH WORKDAY, AND MAINTAIN THEM IN EFFECTIVE OPERATING CONDITION. MAINTENANCE OF BMPs SHOULD BE PROACTIVE, NOT REACTIVE. INSPECT BMPs AS SOON AS POSSIBLE (AND ALWAYS WITHIN 24 HOURS) FOLLOWING A STORM THAT CAUSES SURFACE EROSION, AND PERFORM NECESSARY MAINTENANCE.

2. FREQUENT OBSERVATIONS AND MAINTENANCE ARE NECESSARY TO MAINTAIN BMPs IN EFFECTIVE OPERATING CONDITION. INSPECTIONS AND CORRECTIVE MEASURES SHOULD BE DOCUMENTED THOROUGHLY.

3. WHERE BMPs HAVE FAILED, REPAIR OR REPLACEMENT SHOULD BE INITIATED UPON DISCOVERY OF THE FAILURE.

4. SEDIMENT ACCUMULATED UPSTREAM OF INLET PROTECTION SHALL BE REMOVED AS NECESSARY TO MAINTAIN BMP EFFECTIVENESS, TYPICALLY WHEN STORAGE VOLUME REACHES 50% OF CAPACITY, A DEPTH OF 6" WHEN SILT FENCE IS USED, OR ¼ OF THE HEIGHT FOR STRAW BALES.

5. INLET PROTECTION IS TO REMAIN IN PLACE UNTIL THE UPSTREAM DISTURBED AREA IS PERMANENTLY STABILIZED, UNLESS THE LOCAL JURISDICTION APPROVES EARLIER REMOVAL OF INLET PROTECTION IN STREETS.

6. WHEN INLET PROTECTION AT AREA INLETS IS REMOVED, THE DISTURBED AREA SHALL BE COVERED WITH TOP SOIL, SEEDED AND MULCHED, OR OTHERWISE STABILIZED IN A MANNER APPROVED BY THE LOCAL JURISDICTION.

(DETAIL ADAPTED FROM TOWN OF PARKER, COLORADO AND CITY OF AURORA, COLORADO, NOT AVAILABLE IN AUTOCAD)

NOTE: MANY JURISDICTIONS HAVE BMP DETAILS THAT VARY FROM UDFCD STANDARD DETAILS. CONSULT WITH LOCAL JURISDICTIONS AS TO WHICH DETAIL SHOULD BE USED WHEN DIFFERENCES ARE NOTED.

NOTE: THE DETAILS INCLUDED WITH THIS FACT SHEET SHOW COMMONLY USED, CONVENTIONAL METHODS OF INLET PROTECTION IN THE DENVER METROPOLITAN AREA. THERE ARE MANY PROPRIETARY INLET PROTECTION METHODS ON THE MARKET. UDFCD NEITHER ENDORSES NOR DISCOURAGES USE OF PROPRIETARY INLET PROTECTION; HOWEVER, IN THE EVENT PROPRIETARY METHODS ARE USED, THE APPROPRIATE DETAIL FROM THE MANUFACTURER MUST BE INCLUDED IN THE SWMP AND THE BMP MUST BE INSTALLED AND MAINTAINED AS SHOWN IN THE MANUFACTURER'S DETAILS.

NOTE: SOME MUNICIPALITIES DISCOURAGE OR PROHIBIT THE USE OF STRAW BALES FOR INLET PROTECTION. CHECK WITH LOCAL JURISDICTION TO DETERMINE IF STRAW BALE INLET PROTECTION IS ACCEPTABLE.

Kiowa Engineering Corporation
1604 South 21st Street
Colorado Springs, Colorado 80904
(719) 630-7342

ROCKY TOP RESOURCES
GRADING & EROSION CONTROL DETAILS
TRACT 7 VALLEY GARDEN SUBDIVISION
1755 EAST LAS VEGAS STREET
COLORADO SPRINGS, COLORADO

Project No.:	17066
Date:	2/2020
Design:	RNW
Drawn:	EAK
Check:	RNW
Revisions:	

*EPC accepted changes 10/18/2022
EPC 6/23/2020

Description

Photograph SB-1. Sediment basin at the toe of a slope. Photo courtesy of WWE.

A sediment basin is a temporary pond built on a construction site to capture eroded or disturbed soil transported in storm runoff prior to discharge from the site. Sediment basins are designed to capture site runoff and slowly release it to allow time for settling of sediment prior to discharge. Sediment basins are often constructed in locations that will later be modified to serve as post-construction stormwater basins.

Appropriate Uses

Most large construction sites (typically greater than 2 acres) will require one or more sediment basins for effective management of construction site runoff. On linear construction projects, sediment basins may be impractical; instead, sediment traps or other combinations of BMPs may be more appropriate.

Sediment basins should not be used as stand-alone sediment controls. Erosion and other sediment controls should also be implemented upstream.

When feasible, the sediment basin should be installed in the same location where a permanent post-construction detention pond will be located.

Design and Installation

The design procedure for a sediment basin includes these steps:

- **Basin Storage Volume**: Provide a storage volume of at least 3,600 cubic feet per acre of drainage area. To the extent practical, undisturbed and/or off-site areas should be diverted around sediment basins to prevent "clean" runoff from mixing with runoff from disturbed areas. For undisturbed areas (both on-site and off-site) that cannot be diverted around the sediment basin, provide a minimum of 500 ft^3/acre of storage for undeveloped (but stable) off-site areas in addition to the 3,600 ft^3/acre for disturbed areas. For stable, developed areas that cannot be diverted around the sediment basin, storage volume requirements are summarized in Table SB-1.
- **Basin Geometry:** Design basin with a minimum length-to-width ratio of 2:1 (L:W). If this cannot be achieved because of site space constraints, baffling may be required to extend the effective distance between the inflow point(s) and the outlet to minimize short-circuiting.
- **Dam Embankment**: It is recommended that embankment slopes be 4:1 (H:V) or flatter and no steeper than 3:1 (H:V) in any location.

Sediment Basins	
Functions	
Erosion Control	No
Sediment Control	Yes
Site/Material Management	No

- **Inflow Structure**: For concentrated flow entering the basin, provide energy dissipation at the point of inflow.

Table SB-1. Additional Volume Requirements for Undisturbed and Developed Tributary Areas Draining through Sediment Basins

Imperviousness (%)	Additional Storage Volume (ft^3) Per Acre of Tributary Area
Undeveloped	500
10	800
20	1230
30	1600
40	2030
50	2470
60	2980
70	3560
80	4360
90	5300
100	6460

- **Outlet Works**: The outlet pipe shall extend through the embankment at a minimum slope of 0.5 percent. Outlet works can be designed using one of the following approaches:
  - **Riser Pipe (Simplified Detail):** Detail SB-1 provides a simplified design for basins treating no more than 15 acres.
  - **Orifice Plate or Riser Pipe**: Follow the design criteria for Full Spectrum Detention outlets in the EDB Fact Sheet provided in Chapter 4 of this manual for sizing of outlet perforations with an emptying time of approximately 72 hours. In lieu of the trash rack, pack uniformly sized 1½ - to 2-inch gravel in front of the plate or surrounding the riser pipe. This gravel will need to be cleaned out frequently during the construction period as sediment accumulates within it. The gravel pack will need to be removed and disposed of following construction to reclaim the basin for use as a permanent detention facility. If the basin will be used as a permanent extended detention basin for the site, a trash rack will need to be installed once contributing drainage areas have been stabilized and the gravel pack and accumulated sediment have been removed.

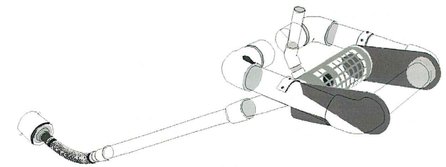

Illustration SB-1. Outlet structure for a temporary sediment basin - Faircloth Skimmer Floating Outlet. Illustration courtesy of J. W. Faircloth & Sons, Inc., FairclothSkimmer.com.

- **Outlet Protection and Spillway:** Consider all flow paths for runoff leaving the basin, including protection at the typical point of discharge as well as overtopping.
  - **Outlet Protection:** Outlet protection should be provided where the velocity of flow will exceed the maximum permissible velocity of the material of the waterway into which discharge occurs. This may require the use of a riprap apron at the outlet location and/or other measures to keep the waterway from eroding.
  - **Emergency Spillway:** Provide a stabilized emergency overflow spillway for rainstorms that exceed the capacity of the sediment basin volume and its outlet. Protect basin embankments from erosion and overtopping. If the sediment basin will be converted to a permanent detention basin, design and construct the emergency spillway(s) as required for the permanent facility. If the sediment basin will not become a permanent detention basin, it may be possible to substitute a heavy polyvinyl membrane or properly bedded rock cover to line the spillway and downstream embankment, depending on the height, slope, and width of the embankments.

Maintenance and Removal

Maintenance activities include the following:

- Dredge sediment from the basin, as needed to maintain BMP effectiveness, typically when the design storage volume is no more than one-third filled with sediment.
- Inspect the sediment basin embankments for stability and seepage.
- Inspect the inlet and outlet of the basin, repair damage, and remove debris. Remove, clean and replace the gravel around the outlet on a regular basis to remove the accumulated sediment within it and keep the outlet functioning.
- Be aware that removal of a sediment basin may require dewatering and associated permit requirements.
- Do not remove a sediment basin until the upstream area has been stabilized with vegetation.

Final disposition of the sediment basin depends on whether the basin will be converted to a permanent post-construction stormwater basin or whether the basin area will be returned to grade. For basins being converted to permanent detention basins, remove accumulated sediment and reconfigure the basin and outlet to meet the requirements of the final design for the detention facility. If the sediment basin is not to be used as a permanent detention facility, fill the excavated area with soil and stabilize with vegetation.

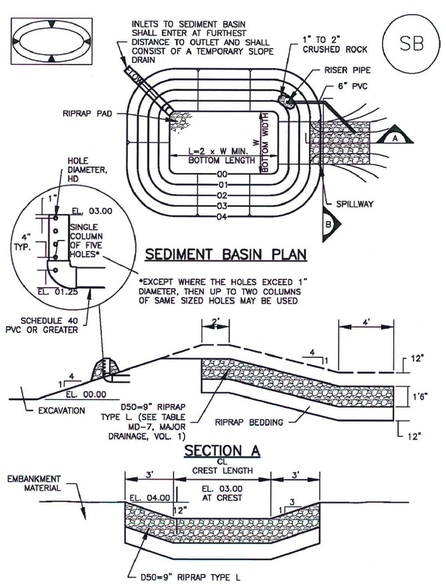

TABLE SB-1. SIZING INFORMATION FOR STANDARD SEDIMENT BASIN

Upstream Drainage Area (rounded to nearest acre), (ac)	Basin Bottom Width (W), (ft)	Spillway Crest Length (CL), (ft)	Hole Diameter (HD), (in)
1	12 ½	2	9/32
2	21	3	11/64
3	28	5	½
4	33 ½	6	9/16
5	38 ½	8	17/32
6	43	9	17/32
7	47 ¼	11	25/32
8	51	12	25/32
9	55	13	⅞
10	58 ¼	15	15/16
11	61	16	15/32
12	64	18	1
13	67 ½	19	1 1/16
14	70 ½	21	1 ⅛
15	73 ¼	22	1 3/16

SEDIMENT BASIN INSTALLATION NOTES

1. SEE PLAN VIEW FOR:
   -LOCATION OF SEDIMENT BASIN.
   -TYPE OF BASIN (STANDARD BASIN OR NONSTANDARD BASIN).
   -FOR STANDARD BASIN, BOTTOM WIDTH W, CREST LENGTH CL, AND HOLE DIAMETER, HD.
   -FOR NONSTANDARD BASIN, SEE CONSTRUCTION DRAWINGS FOR DESIGN OF BASIN INCLUDING RISER HEIGHT H, NUMBER OF COLUMNS N, HOLE DIAMETER HD AND PIPE DIAMETER D.
2. FOR STANDARD BASIN, BOTTOM DIMENSION MAY BE MODIFIED AS LONG AS BOTTOM AREA IS NOT REDUCED.
3. SEDIMENT BASINS SHALL BE INSTALLED PRIOR TO ANY OTHER LAND-DISTURBING ACTIVITY THAT RELIES ON ON BASINS AS AS A STORMWATER CONTROL.
4. EMBANKMENT MATERIAL SHALL CONSIST OF SOIL FREE OF DEBRIS, ORGANIC MATERIAL, AND ROCKS OR CONCRETE GREATER THAN 3 INCHES AND SHALL HAVE A MINIMUM OF 15 PERCENT BY WEIGHT PASSING THE NO. 200 SIEVE.
5. EMBANKMENT MATERIAL SHALL BE COMPACTED TO AT LEAST 95 PERCENT OF MAXIMUM DENSITY IN ACCORDANCE WITH ASTM D698.
6. PIPE SCH 40 OR GREATER SHALL BE USED.
7. THE DETAILS SHOWN ON THESE SHEETS PERTAIN TO STANDARD SEDIMENT BASIN(S) FOR DRAINAGE AREAS LESS THAN 15 ACRES. SEE CONSTRUCTION DRAWINGS FOR EMBANKMENT, STORAGE VOLUME, SPILLWAY, OUTLET, AND OUTLET PROTECTION DETAILS FOR ANY SEDIMENT BASIN(S) THAT HAVE BEEN INDIVIDUALLY DESIGNED FOR DRAINAGE AREAS LARGER THAN 15 ACRES.

SEDIMENT BASIN MAINTENANCE NOTES

1. INSPECT BMPs EACH WORKDAY, AND MAINTAIN THEM IN EFFECTIVE OPERATING CONDITION. MAINTENANCE OF BMPs SHOULD BE PROACTIVE, NOT REACTIVE. INSPECT BMPs AS SOON AS POSSIBLE (AND ALWAYS WITHIN 24 HOURS) FOLLOWING A STORM THAT CAUSES SURFACE EROSION, AND PERFORM NECESSARY MAINTENANCE.
2. FREQUENT OBSERVATIONS AND MAINTENANCE ARE NECESSARY TO MAINTAIN BMPs IN EFFECTIVE OPERATING CONDITION. INSPECTIONS AND CORRECTIVE MEASURES SHOULD BE DOCUMENTED THOROUGHLY.
3. WHERE BMPs HAVE FAILED, REPAIR OR REPLACEMENT SHOULD BE INITIATED UPON DISCOVERY OF THE FAILURE.
4. SEDIMENT ACCUMULATED IN BASIN SHALL BE REMOVED AS NEEDED TO MAINTAIN BMP EFFECTIVENESS, TYPICALLY WHEN SEDIMENT DEPTH REACHES ONE FOOT (I.E., TWO FEET BELOW THE SPILLWAY CREST).
5. SEDIMENT BASINS ARE TO REMAIN IN PLACE UNTIL THE UPSTREAM DISTURBED AREA IS STABILIZED AND GRASS COVER IS ACCEPTED BY THE LOCAL JURISDICTION.
6. WHEN SEDIMENT BASINS ARE REMOVED, ALL DISTURBED AREAS SHALL BE COVERED WITH TOPSOIL, SEEDED AND MULCHED OR OTHERWISE STABILIZED AS APPROVED BY LOCAL JURISDICTION.

(DETAILS ADAPTED FROM DOUGLAS COUNTY, COLORADO)

NOTE: MANY JURISDICTIONS HAVE BMP DETAILS THAT VARY FROM UDFCD STANDARD DETAILS. CONSULT WITH LOCAL JURISDICTIONS AS TO WHICH DETAIL SHOULD BE USED WHEN DIFFERENCES ARE NOTED.

*EPC accepted changes 10/18/2022

COLORADO REGISTERED PROFESSIONAL ENGINEER
10/15/2020

EPC 6/23/2020

Kiowa Engineering Corporation
1604 South 21st Street
Colorado Springs, Colorado 80904
(719) 630-7342

ROCKY TOP RESOURCES
GRADING & EROSION CONTROL DETAILS
TRACT 7 VALLEY GARDEN SUBDIVISION
1755 EAST LAS VEGAS STREET
COLORADO SPRINGS, COLORADO

Project No.:	17066
Date:	02/2020
Design:	RNW
Drawn:	EAK
Check:	RNW
Revisions:	