WOODMOOR WATER AND SANITATION DISTRICT NO.1

LAKE PUMP STATION NO. 2 AND TRANSMISSION PIPELINE

EL PASO COUNTY, COLORADO

GRADING AND EROSION CONTROL PLAN

PPR-21-019

CONTACTS

OWNER:	WOODMOOR WATER AND SANITATION DISTRICT NO. 1 1845 WOODMOOR DRIVE MONUMENT, CO 80132	JESSIE SHAFFER, P.E. (719) 488-2525 JESSIES@WOODMOORWATER.COM
ENVIRONMENTAL ENGINEER:	JVA, INC 1512 LARIMER STREET, SUITE 710 DENVER, CO 80202	RICHARD HOOD, P.E. (303) 565-4901 RHOOD@JVAJVA.COM
STRUCTURAL ENGINEER:	JVA, INC 1512 LARIMER STREET, SUITE 710 DENVER, CO 80202	ADAM TEUNISSEN, P.E. (303) 565-4936 ATEUNISSEN@JVAJVA.COM
ELECTRICAL ENGINEER:	BROWNS HILL ENGINEERING AND CONTROLS 8130 SHAFFER PARKWAY, SUITE A LITTLETON, CO 80127	TED WILLE, P.E. (720) 344-7771 TWILLE@BROWNSHILLENG.COM
MECHANICAL ENGINEER:	MEC, INC. 4919 W. 98TH WAY WESTMINSTER, CO 80031	BRYAN MOEN, P.E. (303) 907-4285 BMOEN@MECENGR.COM

CONSULTING ENGINEERS

JVA, Inc. 1512 Larimer Street, Suite 710
Denver, CO 80202 303.444.1951
www.jvajva.com
Boulder • Fort Collins • Winter Park
Glenwood Springs • Denver

JULY 2021

PREPARED UNDER THE SUPERVISION OF

JVA, Inc.

DRAWING INDEX

SHEET NO.	TITLE
G0.1	LEGEND, NOTES, & ABBREVIATIONS
C0.1	OVERALL KEY MAP
CE1.0	EROSION CONTROL PLAN
CE1.1	EROSION CONTROL PLAN
CE1.2	EROSION CONTROL PLAN
CE1.3	GRADING AND EROSION CONTROL PLAN
CE1.4	EROSION CONTROL DETAILS AND COUNTY NOTES
CE1.5	EROSION CONTROL DETAILS
CE1.6	EROSION CONTROL DETAILS
CE1.7	EROSION CONTROL DETAILS
C2.0	TRANSMISSION MAIN PLAN AND PROFILE
C2.1	TRANSMISSION MAIN PLAN AND PROFILE
C2.2	TRANSMISSION MAIN PLAN AND PROFILE
C2.3	TRANSMISSION MAIN PLAN AND PROFILE
C2.4	TRANSMISSION MAIN PLAN AND PROFILE
C2.5	TRANSMISSION MAIN PLAN AND PROFILE
CD1.0	CIVIL DETAILS
CD1.1	CIVIL DETAILS
CD1.2	CIVIL DETAILS

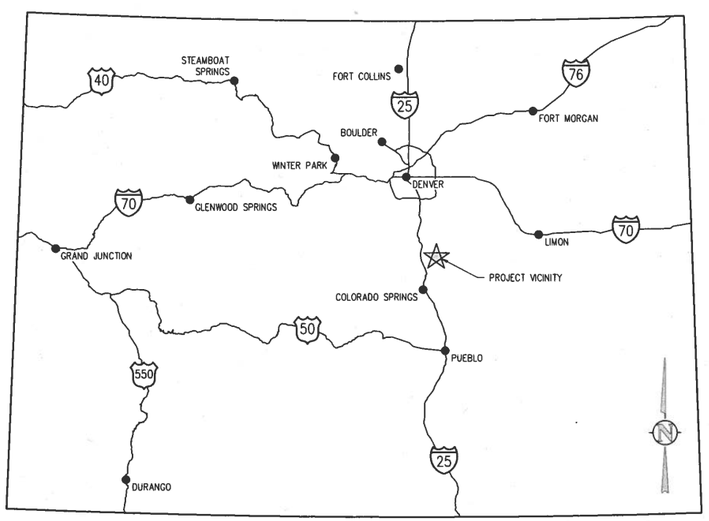

VICINITY MAP
NTS

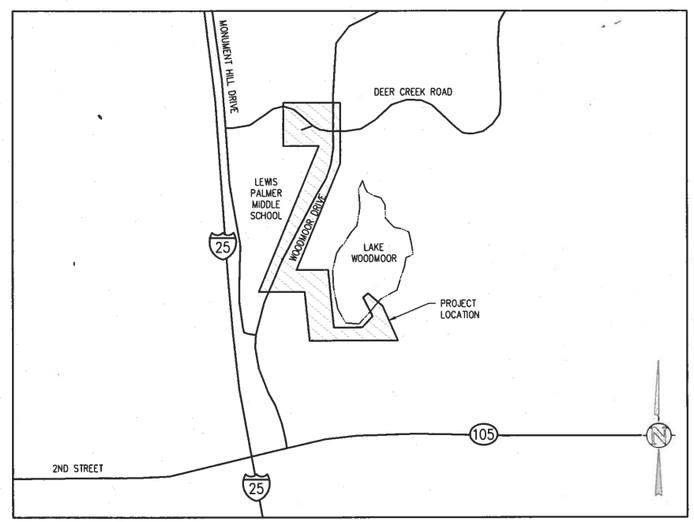

PROJECT LOCATION MAP
NTS

ENGINEER'S STATEMENT:

THIS GRADING AND EROSION CONTROL PLAN WAS PREPARED UNDER MY DIRECTION AND SUPERVISION AND IS CORRECT TO THE BEST OF MY KNOWLEDGE AND BELIEF. SAID PLAN HAS BEEN PREPARED ACCORDING TO THE CRITERIA ESTABLISHED BY THE COUNTY FOR GRADING AND EROSION CONTROL PLANS. I ACCEPT RESPONSIBILITY FOR ANY LIABILITY CAUSED BY MY NEGLIGENT ACTS, ERRORS OR OMISSIONS ON MY PART IN PREPARING THIS PLAN.

Kenneth J. Clifford — Digitally signed by Kenneth J. Clifford DN: cn=Kenneth J. Clifford, o=JVA, Inc., ou=Principal, email=kclifford@jvajva.com, c=US Date: 2021.07.01 07:41:41 -06'00'

COLORADO LICENSED — KENNETH J. CLIFFORD — 47654 — PROFESSIONAL ENGINEER

ENGINEER OF RECORD SIGNATURE 7/1/2021 DATE

OWNER'S STATEMENT:

I, THE OWNER/DEVELOPER HAVE READ AND WILL COMPLY WITH THE REQUIREMENTS OF THE GRADING AND EROSION CONTROL PLAN.

Jessie J. Shaffer 7-6-21

OWNER SIGNATURE DATE

EL PASO COUNTY:

COUNTY PLAN REVIEW IS PROVIDED ONLY FOR GENERAL CONFORMANCE WITH THE COUNTY DESIGN CRITERIA. THE COUNTY IS NOT RESPONSIBLE FOR THE ACCURACY AND ADEQUACY OF THE DESIGN, DIMENSIONS, AND/OR ELEVATIONS WHICH SHALL BE CONFIRMED AT THE JOB SITE. THE COUNTY THROUGH THE APPROVAL OF THIS DOCUMENT ASSUMES NO RESPONSIBILITY FOR COMPLETENESS AND/ OR ACCURACY OF THIS DOCUMENT.

FILED IN ACCORDANCE WITH THE REQUIREMENTS OF THE EL PASO COUNTY LAND DEVELOPMENT CODE. DRAINAGE CRITERIA MANUAL VOLUMES 1 AND 2, AND ENGINEERING CRITERIA MANUAL, AS AMENDED.

IN ACCORDANCE WITH ECM SECTION 1.12, THESE CONSTRUCTION DOCUMENTS WILL BE VALID FOR CONSTRUCTION FOR A PERIOD OF 2 YEARS FROM THE DATE SIGNED BY THE EL PASO COUNTY ENGINEER. IF CONSTRUCTION HAS NOT STARTED WITHIN THOSE 2 YEARS, THE PLANS WILL NEED TO BE RESUBMITTED FOR APPROVAL, INCLUDING PAYMENT OF REVIEW FEES AT THE PLANNING AND COMMUNITY DEVELOPMENT DIRECTOR'S DISCRETION.

COUNTY ENGINEER SIGNATURE

APPROVED
Engineering Department
07/12/2021 3:40:18 PM
dsdnijkamp
EPC Planning & Community Development Department

N:\1051.6a\Drawings\1051.6a - Site Development Plan - Cover.dwg, 7/01/2021 - 2:30 PM, mmh

ABBREVIATIONS

AASHTO	AMERICAN ASSOC. OF STATE HIGHWAY AND TRANSPORTATION OFFICIALS
ABAN	ABANDON
AC	ASPHALTIC CONCRETE PAVING
ADDL	ADDITIONAL
ADDM	ADDENDUM
ADJ	ADJUSTABLE
AL	ALUMINUM
ALT	ALTERNATE
AMT	AMOUNT
APPROX	APPROXIMATE
ARCH	ARCHITECT(URAL)
ARV	AIR RELIEF VALVE
ASTM	AMERICAN SOCIETY FOR TESTING AND MATERIALS
ASPH	ASPHALT
ASSY	ASSEMBLY
ASYM	ASYMMETRICAL
AUTO	AUTOMATIC
AVG	AVERAGE
AWWA	AMERICAN WATER WORKS ASSOC.
BC	BACK OF CURB
BFV	BUTTERFLY VALVE
BG	FINISHED GRADE ADJACENT TO BOTTOM OF WALL
BLDG	BUILDING
BLK	BLOCK
BM	BENCH MARK
BMP	BEST MANAGEMENT PRACTICE
BS	BACKSIGHT
BOS	BOTTOM OF STEP
BOT	BOTTOM
BSMT	BASEMENT
BVCE	BEGIN VERTICAL CURVE ELEVATION
BVCS	BEGIN VERTICAL CURVE STATION
BW	BOTTOM OF WALL
CB	CATCH BASIN
CCW	COUNTER CLOCKWISE
CDOT	COLORADO DEPARTMENT OF TRANSPORTATION
CIP	CAST IRON PIPE
CJ	CONSTRUCTION JOINT
CL	CENTER LINE OR CHAIN LINK
CLR	CLEAR
CMP	CORRUGATED METAL PIPE
CMU	CONCRETE MASONRY UNIT
CO	CLEANOUT
CONC	CONCRETE
CONST	CONSTRUCTION
CONT	CONTINUOUS(ATION)
COR	CORNER
CR	CONCENTRIC REDUCER
CTR	CENTER
CY	CUBIC YARDS
DEMO	DEMOLITION
DIA	DIAMETER
DIAG	DIAGONAL
DIP	DUCTILE IRON PIPE
DOM	DOMESTIC
DN	DOWN
DR	DRAIN
DWG	DRAWING
DWL	DOWEL
E	EAST
EA	EACH
ECC	ECCENTRIC
EJ	EXPANSION JT
EL	ELEVATION
ELB	ELBOW
ELEC	ELECTRICAL
ENGR	ENGINEER
EOP	EDGE OF PAVEMENT
EQ	EQUAL
EQUIP	EQUIPMENT
EQUIV	EQUIVALENT
ESMT	EASEMENT
EST	ESTIMATE
EVCE	END VERTICAL CURVE ELEVATION
EVCS	END VERTICAL CURVE STATION
EW	EACH WAY
EXP JT	EXPANSION JOINT
EXIST	EXISTING
FND	FOUNDATION
FES	FLARED END SECTION
FF	FINISH FLOOR
FG	FINISH GRADE
FH	FIRE HYDRANT
FL	FLOW LINE
FN	FENCE
FOC	FACE OF CONCRETE
FPM	FEET PER MINUTE
FPS	FEET PER SECOND
FT	FEET
FTG	FOOTING OR FITTING
G	GAS
GA	GAUGE
GAL	GALLON
GALV	GALVANIZED
GCO	GRADE CLEANOUT
GIP	GALVANIZED IRON PIPE
GND	GROUND
GPD	GALLONS PER DAY
GPM	GALLONS PER MINUTE
GR	GRATE
GRTG	GRATING
GSP	GALVANIZED STEEL PIPE
GV	GATE VALVE
H	HIGH
HB	HOSE BIB
HE	HORIZONTAL ELLIPTICAL
HDWL	HEADWALL
HNDRL	HAND RAIL
HORIZ	HORIZONTAL
HP	HIGH POINT
HR	HOUR
HVAC	HEATING, VENTILATION, AIR CONDITIONING
HWY	HIGHWAY
HWL	HIGH WATER LINE
HYD	HYDRANT
INCL	INCLUDED
ID	INSIDE DIAMETER
IN	INLET
INSUL	INSULATION
INV	INVERT
IRR	IRRIGATION
JTS	JOINTS
KO	KNOCKOUT
KPL	KICK PLATE
KWY	KEYWAY
L	LEFT OR LITER
LSCAPE	LANDSCAPE(ING)
LF	LINEAR FOOT
LP	LOW POINT
LT	LIGHT
LWL	LOW WATER LEVEL
MAINT	MAINTENANCE
MAN	MANUAL
MATL	MATERIAL
MAX	MAXIMUM
ME	MATCH EXISTING
MECH	MECHANICAL
MFR	MANUFACTURER
MH	MANHOLE
MIN	MINIMUM
MISC	MISCELLANEOUS
MJ	MECHANICAL JOINT
N	NORTH
NA	NOT APPLICABLE
NIC	NOT IN CONTRACT
NPT	NATIONAL PIPE THREAD
NTS	NOT TO SCALE
OC	ON CENTER
OD	OUTSIDE DIAMETER
OPP	OPPOSITE
OPT	OPTIONAL
PC	POINT OF CURVATURE
PCO	PRESSURE CLEAN OUT
PCR	POINT OF CURVE RETURN
PI	POINT OF INTERSECTION
PVI	POINT OF VERTICAL INTERSECTION
PL	PROPERTY LINE
PE	POLYETHYLENE
PREFAB	PREFABRICATED
PRELIM	PRELIMINARY
PREP	PREPARATION
PROP	PROPOSED
PRV	PRESSURE REDUCING VALVE OR PRESSURE RELIEF VALVE
PSF	POUNDS PER SQUARE FOOT
PSI	POUNDS PER SQUARE INCH
PT	POINT OF TANGENCY
PV	PLUG VALVE
PVC	POLYVINYL CHLORIDE OR POINT OF VERTICAL CURVATURE
PVMT	PAVEMENT
QTY	QUANTITY
R	RIGHT
RAD	RADIUS
RCP	REINFORCED CONCRETE PIPE
RD	ROOF DRAIN
RE	REFERENCE
RECT	RECTANGULAR
REINF	REINFORCE (D) (ING) (MENT)
REQD	REQUIRED
ROW	RIGHT OF WAY
SAN	SANITARY
SD	STORM DRAIN
SECT	SECTION
SPD	STANDARD PROCTOR DENSITY
SPEC	SPECIFICATION
SQ	SQUARE
SQ IN	SQUARE INCH
SQ FT	SQUARE FOOT
SQ YD	SQUARE YARD
SS	SANITARY SEWER
SST	STAINLESS STEEL
STA	STATION
STD	STANDARD
STL	STEEL
STRUCT	STRUCTURAL
SVC	SERVICE
SWMP	STORMWATER MANAGEMENT PLAN
SYM	SYMMETRICAL
TB	THRUST BLOCK
TBC	TOP BACK OF CURB
TBM	TEMPORARY BENCH MARK
TEMP	TEMPORARY
TG	FINISHED GRADE ADJACENT TO TOP OF WALL
THK	THICK
TOB	TOP OF BANK
TOC	TOP OF CONCRETE OR TOP OF CURB
TOS	TOP OF STEP
TOT	TOTAL
TW	TOP OF WALL OR CAP OF WALL
TYP	TYPICAL
UBC	UNIFORM BUILDING CODE
UGE	UNDERGROUND ELECTRIC
UTIL	UTILITY
VERT	VERTICAL
VC	POINT OF VERTICAL CURVATURE
VCP	VITRIFIED CLAY PIPE
W	WIDE OR WIDTH
W/	WITH
W/O	WITHOUT
WQCE	WATER QUALITY CONTROL ELEVATION
WSE	WATER SURFACE ELEVATION
WW	WASTEWATER
X SECT	CROSS SECTION
XFMR	ELECTRONIC TRANSFORMER
YH	YARD HYDRANT

DESIGN LEGEND

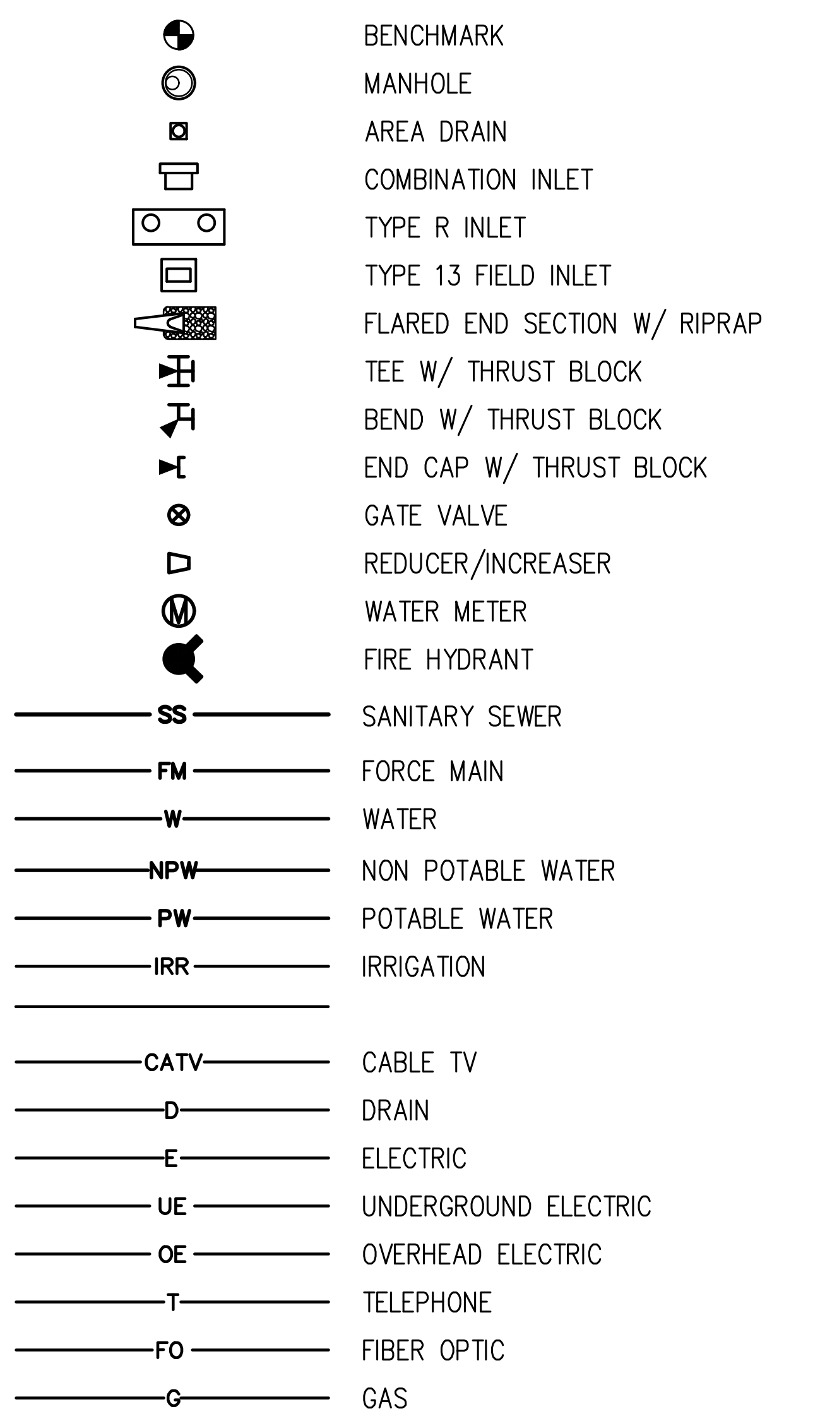

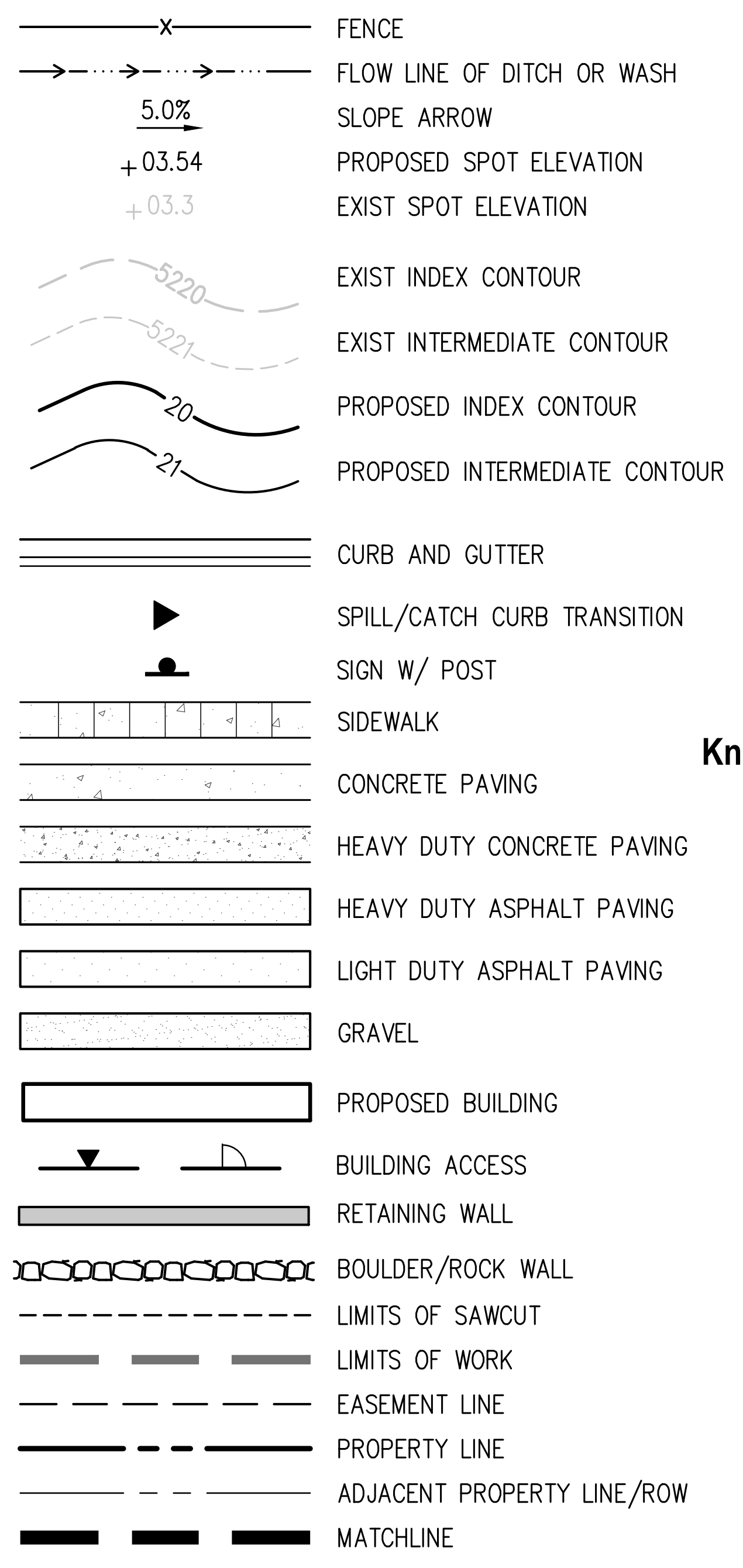

Know what's **below.**
Call before you dig.

DEMOLITION LEGEND

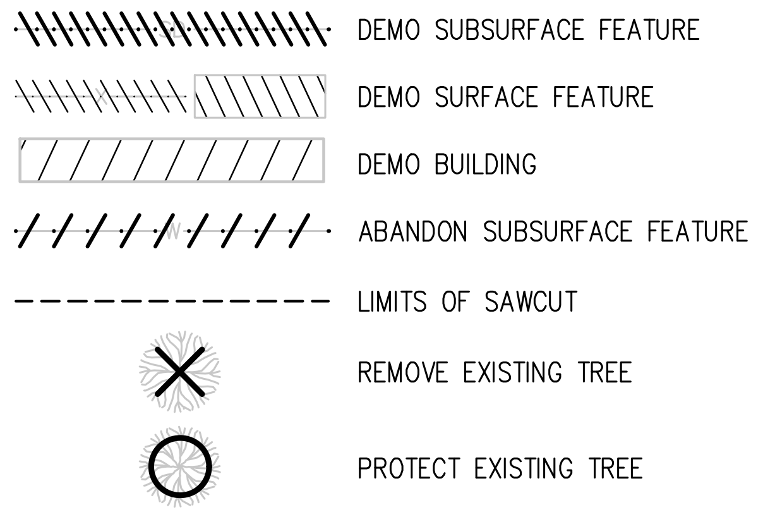

SECTION CALLOUT

DETAIL MARKER

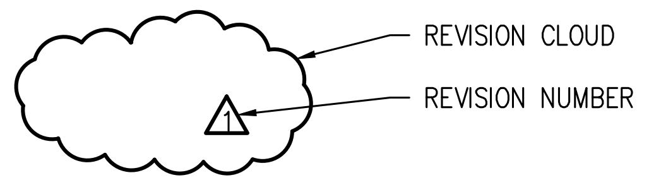

DETAIL TITLE

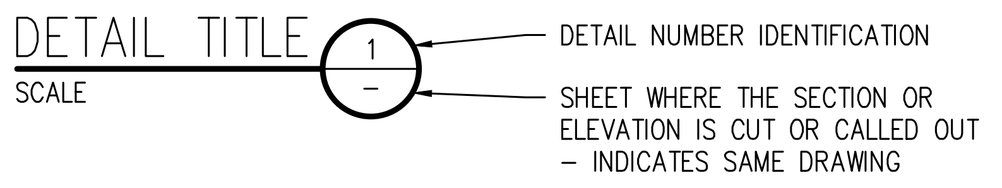

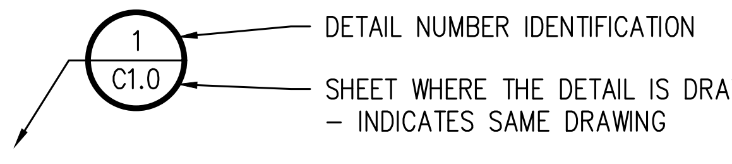

DUCTILE IRON PIPE LEGEND

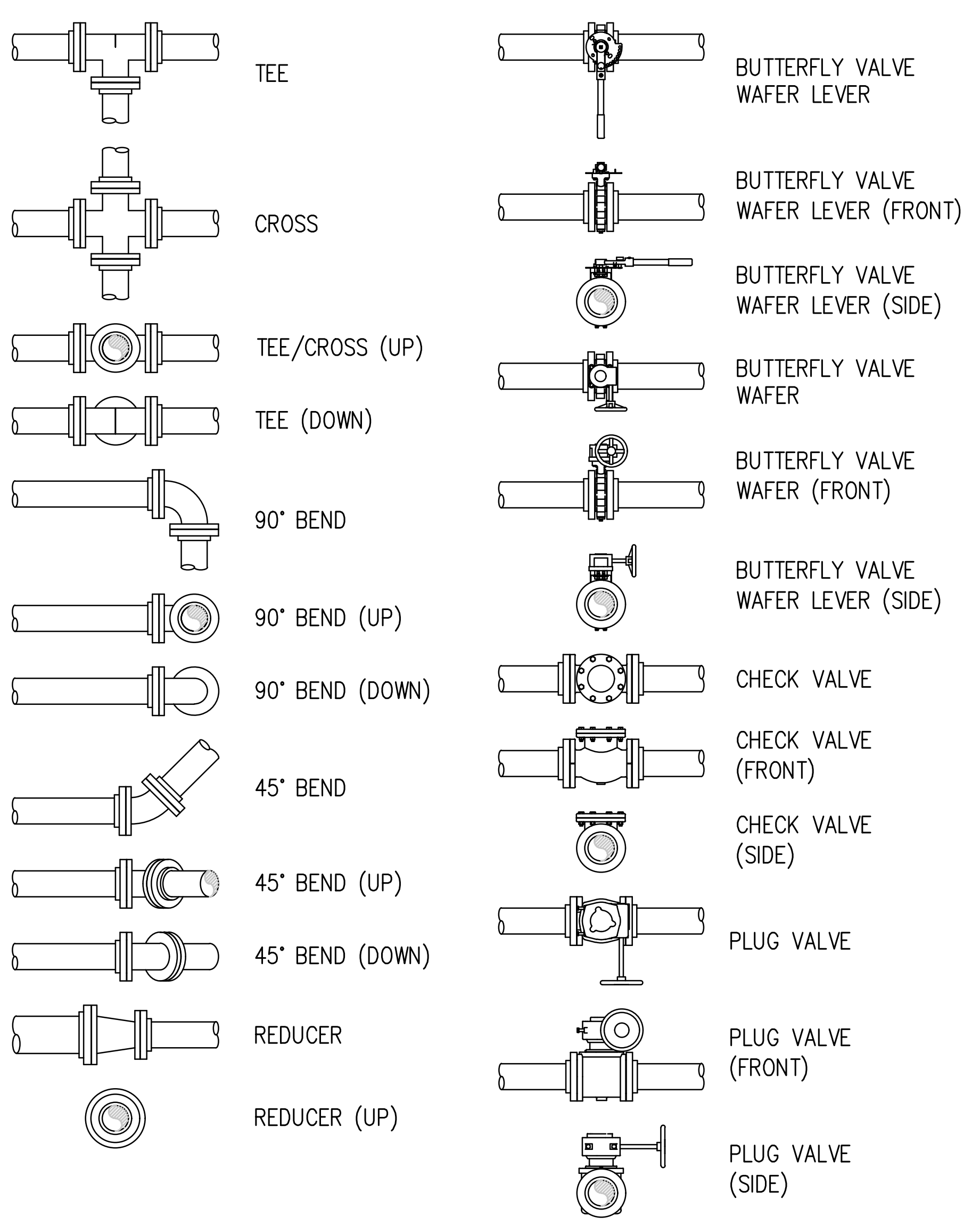

DESIGN CRITERIA

DESIGN FLOW

TO CWTP

$Q_{IRRIGATION}$:	300 GPM
Q_{FIRM}:	1,200 GPM
Q_{MAX}:	1,550 GPM

TO SWTP

$Q_{IRRIGATION}$:	700 GPM
Q_{FIRM}:	2,100 GPM
Q_{MAX}:	2,800 GPM

PUMP STATION

CWTP PUMPS

PUMP QUANTITY:	3
TYPE:	SUBMERSIBLE
PUMP DESIGN FLOW, EACH:	750 GPM
TDH:	120 FT
OPERATIONS:	LEAD/LAG/SWING
MOTOR HP, EACH:	45 HP
POWER:	480V, 3 PHASE

SWTP PUMPS

PUMP QUANTITY:	5 (4 FUTURE)
TYPE:	SUBMERSIBLE
PUMP DESIGN FLOW, EACH:	560 GPM
TDH:	179 FT
OPERATIONS:	LEAD/LAG/LAG/LAG/LAG (WITH 2 EXIST PUMPS)
MOTOR HP, EACH:	45 HP
POWER:	480V, 3 PHASE

EXIST PUMP STATION

EXIST SWTP PUMPS (TO BE REPLACED IN THE FUTURE)

PUMP QUANTITY:	2
TYPE:	SUBMERSIBLE
PUMP DESIGN FLOW, EACH:	700 GPM
TDH:	_____ FT
MOTOR HP, EACH:	20 HP
POWER:	480V, 3 PHASE

EXIST IRRIGATION PUMP

PUMP QUANTITY:	1
TYPE:	SUBMERSIBLE
PUMP DESIGN FLOW:	500 GPM
TDH:	______ FT
OPERATIONS:	DUTY
MOTRO HP, EACH:	20 HP
POWER:	480V, 3 PHASE

GENERAL NOTES

1. ALL MATERIALS AND WORKMANSHIP SHALL BE IN CONFORMANCE WITH THE LATEST STANDARDS AND SPECIFICATIONS OF EL PASO COUNTY, COLORADO, WOODMOOR WATER AND SANITATION DISTRICT, COLORADO DEPARTMENT OF TRANSPORTATION, TRI-LAKES MONUMENT FIRE PROTECTION DISTRICT REQUIREMENTS, AND APPLICABLE STATE AND LOCAL STANDARDS AND SPECIFICATIONS. THE CONTRACTOR SHALL HAVE IN POSSESSION AT THE JOB SITE AT ALL TIMES ONE (1) SIGNED COPY OF APPROVED PLANS, STANDARDS AND SPECIFICATIONS. CONTRACTOR SHALL CONSTRUCT AND MAINTAIN EMERGENCY ACCESS ROUTES TO THE SITE AND STRUCTURE AT ALL TIMES PER THE APPLICABLE TRI-LAKES MONUMENT FIRE PROTECTION DISTRICT REQUIREMENTS. THE CONTRACTOR SHALL OBTAIN WRITTEN APPROVAL FOR ANY VARIANCE TO THE ABOVE DOCUMENTS. NOTIFY ENGINEER OF ANY CONFLICTING STANDARDS OR SPECIFICATIONS. IN THE EVENT OF ANY CONFLICTING STANDARD OR SPECIFICATION, THE MORE STRINGENT OR HIGHER QUALITY STANDARD, DETAIL OR SPECIFICATION SHALL APPLY.

2. THE CONTRACTOR SHALL OBTAIN, AT HIS OWN EXPENSE, ALL APPLICABLE CODES, LICENSES, STANDARD SPECIFICATIONS, PERMITS, BONDS, ETC., WHICH ARE NECESSARY TO PERFORM THE PROPOSED WORK, INCLUDING, BUT NOT LIMITED TO A LOCAL AND STATE GROUNDWATER DISCHARGE AND COLORADO DEPARTMENT OF HEALTH AND ENVIRONMENT (CDPHE) STORMWATER DISCHARGE PERMIT ASSOCIATED WITH CONSTRUCTION ACTIVITY.

3. THE CONTRACTOR SHALL BE RESPONSIBLE FOR NOTIFYING THE REQUIRED PARTY (OWNER AND ENGINEER) AT LEAST 48 HOURS PRIOR TO START OF ANY CONSTRUCTION, PRIOR TO BACKFILLING, AND AS REQUIRED BY JURISDICTIONAL AUTHORITY AND/OR PROJECT SPECIFICATIONS. THE CONTRACTOR SHALL CONTINUE WITH NOTIFICATIONS THROUGHOUT THE PROJECT AS REQUIRED BY THE STANDARDS AND SPECIFICATIONS.

4. THE LOCATIONS OF EXISTING UTILITIES ARE SHOWN IN THE APPROXIMATE LOCATION BASED ON INFORMATION BY OTHERS. NOT ALL UTILITIES MAY BE SHOWN. THE CONTRACTOR SHALL DETERMINE THE EXACT SIZE, LOCATION AND TYPE OF ALL EXISTING UTILITIES WHETHER SHOWN OR NOT BEFORE COMMENCING WORK. THE ENGINEER AND/OR OWNER ASSUMES NO RESPONSIBILITY FOR THE ACCURACY OR COMPLETENESS SHOWN ON PLANS. THE CONTRACTOR SHALL BE FULLY AND SOLELY RESPONSIBLE FOR ANY AND ALL DAMAGES AND COSTS WHICH MIGHT OCCUR BY THE CONTRACTOR'S FAILURE TO EXACTLY LOCATE AND PRESERVE ANY AND ALL UTILITIES. THE CONTRACTOR SHALL NOTIFY ALL PUBLIC AND PRIVATE UTILITY COMPANIES AND DETERMINE THE LOCATION OF ALL EXISTING UTILITIES PRIOR TO PROCEEDING WITH GRADING AND CONSTRUCTION. ALL WORK PERFORMED IN THE AREA OF UTILITIES SHALL BE PERFORMED AND INSPECTED ACCORDING TO THE REQUIREMENTS OF THE UTILITY OWNER. LIKEWISE, THE CONTRACTOR SHALL BE RESPONSIBLE FOR LOCATING AND MAPPING ANY EXISTING UTILITY (INCLUDING DEPTH) WHICH MAY CONFLICT WITH THE PROPOSED CONSTRUCTION, AND FOR RELOCATING ENCOUNTERED UTILITIES AS DIRECTED BY THE ENGINEER. CONTRACTOR SHALL CONTACT AND RECEIVE APPROVAL FROM UTILITY OWNER AND ENGINEER BEFORE RELOCATING ANY ENCOUNTERED UTILITIES. CONTRACTOR RESPONSIBLE FOR SERVICE CONNECTIONS, AND RELOCATING AND RECONNECTING AFFECTED UTILITIES AS COORDINATED WITH UTILITY OWNER AND/OR ENGINEER, INCLUDING NON-MUNICIPAL UTILITIES (TELEPHONE, GAS, CABLE, ETC., WHICH SHALL BE COORDINATED WITH THE UTILITY OWNER). THE CONTRACTOR SHALL IMMEDIATELY CONTACT ENGINEER UPON DISCOVERY OF A UTILITY DISCREPANCY OR CONFLICT. AT LEAST 48 HOURS PRIOR TO CONSTRUCTION, THE CONTRACTOR SHALL NOTIFY THE UTILITY NOTIFICATION CENTER OF COLORADO (1-800-922-1987, WWW.UNCC.ORG). SEE SURVEY UTILITY LOCATION INFORMATION BELOW.

5. THE CONTRACTOR SHALL BE SOLELY AND COMPLETELY RESPONSIBLE FOR CONDITIONS AT AND ADJACENT TO THE JOB SITE, INCLUDING SAFETY OF ALL PERSONS AND PROPERTY DURING THE PERFORMANCE OF THE WORK. THE CONTRACTOR SHALL PREPARE A TRAFFIC CONTROL PLAN FOR OWNER AND/OR CITY APPROVAL AND PROVIDE ALL LIGHTS, SIGNS, BARRICADES, FENCING, FLAGMEN OR OTHER DEVICES NECESSARY TO PROVIDE FOR PUBLIC SAFETY. THIS REQUIREMENT SHALL APPLY CONTINUOUSLY AND NOT BE LIMITED TO NORMAL WORKING HOURS. THE CONTRACTOR AGREES TO COMPLY WITH THE PROVISIONS OF THE TRAFFIC CONTROL PLAN AND THE LATEST EDITION OF THE "MANUAL ON UNIFORM TRAFFIC CONTROL DEVICES," PART VI, FOR CONSTRUCTION SIGNAGE AND TRAFFIC CONTROL. ALL TEMPORARY AND PERMANENT TRAFFIC SIGNS SHALL COMPLY TO THE MANUAL ON UNIFORM TRAFFIC CONTROL DEVICES (MUTCD) WITH REGARD TO SIGN SHAPE, COLOR, SIZE, LETTERING, ETC. UNLESS OTHERWISE SPECIFIED. IF APPLICABLE, PART NUMBERS ON SIGNAGE DETAILS REFER TO MUTCD SIGN NUMBERS.

6. THE CONTRACTOR SHALL BE RESPONSIBLE FOR REMOVING ANY GROUNDWATER ENCOUNTERED DURING THE CONSTRUCTION OF ANY PORTION OF THIS PROJECT. GROUNDWATER SHALL BE PUMPED, PIPED, REMOVED AND DISPOSED OF IN A MANNER WHICH DOES NOT CAUSE FLOODING OF EXISTING STREETS NOR EROSION ON ABUTTING PROPERTIES IN ORDER TO CONSTRUCT THE IMPROVEMENTS SHOWN ON THESE PLANS. GROUNDWATER TO BE PUMPED SHALL BE TESTED, PERMITTED, AND PUMPED PER THE STATE OF COLORADO AND LOCAL GROUNDWATER DISCHARGING PERMIT REQUIREMENTS.

7. RIM AND GRATE ELEVATIONS SHOWN ON PLANS ARE APPROXIMATE ONLY AND ARE NOT TO BE TAKEN AS FINAL ELEVATIONS. THE CONTRACTOR SHALL ADJUST RIMS AND OTHER IMPROVEMENTS TO MATCH FINAL PAVEMENT AND FINISHED GRADE ELEVATIONS.

8. THE EXISTING AND PROPOSED ELEVATIONS OF FLATWORK, SIDEWALKS, CURBS, THRESHOLDS, PAVING, ETC. AS SHOWN HEREON ARE BASED ON EXTRAPOLATION OF FIELD SURVEY DATA, EXISTING CONDITIONS, AND DATA PROVIDED BY OTHERS. AT CRITICAL AREAS AND SITE FEATURES, CONTRACTOR SHALL HAVE FORMWORK INSPECTED AND APPROVED BY OWNER, OWNER'S REPRESENTATIVE, OR ENGINEER PRIOR TO PLACING CONCRETE. MINOR ADJUSTMENTS, AS APPROVED, TO PROPOSED GRADES, INVERTS, ETC. MAY BE REQUIRED TO PREVENT PONDING OR SLOPE NOT IN CONFORMANCE WITH MUNICIPAL STANDARDS. ALL FLATWORK MUST PREVENT PONDING AND PROVIDE POSITIVE DRAINAGE AWAY FROM EXISTING AND PROPOSED BUILDINGS, WALLS, ROOF DRAIN OUTFALLS, ACROSS DRIVES AND WALKS, ETC., TOWARDS THE PROPOSED INTENDED DRAINAGE FEATURES AND CONVEYANCES. EARTHEN FORM WORK SHALL NOT BE ALLOWED.

9. FINAL LIMITS OF REQUIRED ASPHALT SAWCUTTING AND PATCHING MAY VARY FROM LIMITS SHOWN ON PLANS. CONTRACTOR TO PROVIDE SAWCUT AND PATCH WORK TO ACHIEVE POSITIVE DRAINAGE AND A SMOOTH TRANSITION TO EXISTING ASPHALT WITHIN SLOPES ACCEPTABLE TO THE ENGINEER AND WITHIN MUNICIPAL STANDARDS. CONTRACTOR SHALL PROVIDE ADDITIONAL SAWCUTTING AND PATCHING AT UTILITY WORK, CONNECTION POINTS TO EXISTING PAVEMENT AND FEATURES, ETC. THAT MAY NOT BE DELINEATED ON PLANS.

10. ANY EXISTING MONITORING WELLS, CLEANOUTS, VALVE BOXES, ETC. TO BE PROTECTED AND TO REMAIN IN SERVICE. IF FEATURES EXIST, EXTEND OR LOWER TO FINAL SURFACE WITH LIKE KIND CAP WITH STANDARD CAST ACCESS LID WITH SAME MARKINGS. IN LANDSCAPED AREAS PROVIDE A CONCRETE COLLAR (18"X18"X6" THICK) AT ALL EXISTING AND PROPOSED MONITORING WELLS, CLEANOUTS, VALVE BOXES, ETC.

11. OWNER TO APPROVE ALL PRIVATE CONCRETE FINISHING, JOINT PATTERNS AND COLORING REQUIREMENTS PRIOR TO CONSTRUCTION. SUBMIT JOINT LAYOUT PLAN TO OWNER FOR APPROVAL PRIOR TO CONSTRUCTION.

12. PIPE LENGTHS AND HORIZONTAL CONTROL POINTS SHOWN ARE FROM CENTER OF STRUCTURES, END OF FLARED END SECTIONS, ETC. SEE STRUCTURE DETAILS FOR EXACT HORIZONTAL CONTROL LOCATION. CONTRACTOR IS RESPONSIBLE FOR ADJUSTING ACTUAL PIPE LENGTHS TO ACCOUNT FOR STRUCTURES AND LENGTH OF FLARED END SECTIONS.

13. ALL SURPLUS MATERIALS, TOOLS, AND TEMPORARY STRUCTURES, FURNISHED BY THE CONTRACTOR, SHALL BE REMOVED FROM THE PROJECT SITE BY THE CONTRACTOR. ALL DEBRIS AND RUBBISH CAUSED BY THE OPERATIONS OF THE CONTRACTOR SHALL BE REMOVED, AND THE AREA OCCUPIED DURING CONSTRUCTION ACTIVITIES SHALL BE RESTORED TO ITS ORIGINAL CONDITION, WITHIN 48 HOURS OF PROJECT COMPLETION, UNLESS OTHERWISE DIRECTED BY THE MUNICIPALITY OR OWNER'S REPRESENTATIVE.

14. THE CONTRACTOR IS REQUIRED TO PROVIDE AND MAINTAIN EROSION AND SEDIMENT CONTROL MEASURES IN ACCORDANCE WITH THE LOCAL JURISDICTION, THE STATE OF COLORADO, THE M-STANDARD PLANS OF THE COLORADO DEPARTMENT OF TRANSPORTATION, AND THE APPROVED EROSION CONTROL PLAN. JURISDICTIONAL AUTHORITY MAY REQUIRE THE CONTRACTOR TO PROVIDE ADDITIONAL EROSION CONTROL MEASURES AT THE CONTRACTOR'S EXPENSE DUE TO UNFORESEEN EROSION PROBLEMS OR IF THE PLANS DO NOT FUNCTION AS INTENDED. THE CONTRACTOR IS RESPONSIBLE FOR PROHIBITING SILT AND DEBRIS LADEN RUNOFF FROM LEAVING THE SITE, AND FOR KEEPING ALL PUBLIC AREAS FREE OF MUD AND DEBRIS. THE CONTRACTOR IS RESPONSIBLE FOR RE-ESTABLISHING FINAL GRADES AND FOR REMOVING ACCUMULATED SEDIMENTATION FROM ALL AREAS INCLUDING SWALES AND DETENTION/WATER QUALITY AREAS. CONTRACTOR SHALL REMOVE TEMPORARY EROSION CONTROL MEASURES AND REPAIR AREAS AS REQUIRED AFTER VEGETATION IS ESTABLISHED AND ACCEPTED BY OWNER AND MUNICIPALITY.

15. PROTECT ALL TREES AND VEGETATION. PLACE CONSTRUCTION FENCING AT DRIP LINE OF TREES AND PLANTS NEAR THE WORK ZONE. DEEP WATER TREES WEEKLY. HAND EXCAVATION REQUIRED AT ROOT ZONES WHERE PROPOSED PAVING OR UTILITY WORK IS WITHIN DRIPLINE OF TREES.

16. SURVEY INFORMATION:
    - 16.1. BENCHMARK INFORMATION: TOPOGRAPHIC INFORMATION WAS PROVIDED BY FLATIRONS SURVEYING, INC. SEE "EFILE-C19-75763-LSP_2021-01-19" DATED 01/19/2021. PROJECT BENCHMARK ELEVATION: 7111.32' AT NGS CONTROL POINT T 395 (STAINLESS STEEL ROD). THE DATUM IS NAVD88 PER SURVEY. COORDINATE AND VERIFY ALL VERTICAL AND HORIZONTAL DATA SHOWN IN SURVEY AND REPORT ANY IRREGULARITIES OR DISCREPANCIES TO ENGINEER PRIOR TO CONSTRUCTION.
    - 16.2. BASIS OF BEARINGS: GPS DERIVED BEARINGS BASED ON A BEARING OF S64°36'08"E ALONG THE NORTHERLY LINE OF THE DUNES AT WOODMOOR, FILING NO. 2 AS DESCRIBED IN THE RECORDS OF EL PASO COUNTY, RECORDED ON DECEMBER 09, 2016 AT RECEPTION NO. 216713876, BETWEEN A FOUND #4 REBAR WITH 1 1/4" YELLOW PLASTIC CAP "EDWARD JAMES LS 33196" AT THE NORTHWESTERLY CORNER OF LOT 14 OF SAID PLAT AND A FOUND #4 REBAR WITH 1 1/4" YELLOW PLASTIC CAP "LS 31548" AT THE NORTHEASTERLY CORNER OF LOT 20 OF SAID PLAT AS SHOWN HEREON. COLORADO STATE PLANE COORDINATE SYSTEM, CENTRAL ZONE, NORTH AMERICAN DATUM 1983 (NAD83). ALL BEARINGS SHOWN HEREON ARE RELATIVE THERETO
    - 16.3. HORIZONTAL CONTROL INFORMATION: HORIZONTAL CONTROL COORDINATES ARE BASED ON THE REFERENCED SURVEY AND ARE PROVIDED BY THE FOLLOWING POINTS AS SHOWN ON THE PLANS:

CP-1	N1463889.46	E3181603.53	ELEV 7146.81	
CP-3	N1463758.58	E318955.55	ELEV 7147.60	
CP-4	N1463758.57	E3181955.58	ELEV 7147.85	
CP-28	N1461914.45	E3181634.98	ELEV 7096.08	PIN 4RBR 1.25IN YPC EDWARD JAMES LS 33196
CP-38	N1461267.86	E3181664.59	ELEV 7088.36	PIN 4RBR 1.25IN YPC EDWARD JAMES LS 33196
CP-45	N1460943.23	E3182734.55	ELEV 7102.66	PIN 4RBR 1.5IN OPC LS 25966

    - 16.4 SURVEY UTILITY LOCATION INFORMATION PER THE SURVEYOR: SUBSURFACE UTILITIES ARE SHOWN IN APPROXIMATE HORIZONTAL AND VERTICAL LOCATIONS CONSISTENT WITH ASCE 38-02 QUALITY LEVEL "B" (INFORMATION OBTAINED BY THE APPLICATION OF APPROPRIATE SURFACE GEOPHYSICAL METHODS TO DETERMINE THE EXISTENCE AND HORIZONTAL POSITION OF VIRTUALLY ALL UTILITIES WITHIN THE PROJECT LIMITS. THE INFORMATION OBTAINED IN THIS MANNER IS SURVEYED TO PROJECT CONTROL.) AND QUALITY LEVEL "C" (INFORMATION OBTAINED BY SURVEYING AND PLOTTING VISIBLE ABOVE-GROUND UTILITY FEATURES AND BY USING PROFESSIONAL JUDGMENT IN CORRELATING THIS INFORMATION TO QUALITY LEVEL D; INFORMATION DERIVED FROM EXISTING RECORDS OR ORAL RECOLLECTIONS), AND BASED ON FIELD MEASUREMENTS PROVIDED BY THE OWNER AND THE CONTRACTOR. SUBSURFACE UTILITIES ARE NOT DEPICTED TO THE EXTENT SET FORTH IN ASCE 38-02 QUALITY LEVELS "A" (INFORMATION OBTAINED THROUGH THE NONDESTRUCTIVE EXPOSURE OF UNDERGROUND UTILITIES, AND ALSO PROVIDES THE TYPE, SIZE, CONDITION, MATERIAL AND OTHER CHARACTERISTICS OF UNDERGROUND FEATURES.). TO THE EXTENT DEEMED NECESSARY FOR THE PROTECTION OF PERSONS AND PROPERTY, POTHOLING OR OTHER PRECISE MAPPING MAY BE COMPLETED TO CONFIRM THE EXACT LOCATION OF ANY SUBSURFACE UTILITIES. NOTIFY OWNER AND ENGINEER WITH ALL UTILITY INFORMATION PRIOR TO CONSTRUCTION. VISIT HTTPS://WWW.FHWA.DOT.GOV/PROGRAMADMIN/SUEINDEX.CFM FOR MORE INFORMATION.

17. THE CONTRACTOR AT THE CONTRACTORS EXPENSE SHALL FURNISH THE OWNER AND ENGINEER OF RECORD A COMPLETE SET OF CONSTRUCTION RECORD DRAWINGS ("AS-BUILTS") FOR THE CONSTRUCTED IMPROVEMENTS. THE AS-BUILT SET SHALL SHOW SUFFICIENT DIMENSION TIES TO PERMANENT SURFACE FEATURES OR NORTHING/EASTING POINTS FOR ALL BURIED FACILITIES TO ALLOW FOR FUTURE LOCATING. THE AS-BUILT SET SHALL SHOW AS-BUILT CONTOURS AND ELEVATIONS OF ASPHALT AND CONCRETE FLATWORK, FLOWLINES, GRADE BREAKS, STAIRS, CROSS-SLOPES, HIGH AND LOW POINTS, AND ADDITIONAL ELEVATIONS TO DEMONSTRATE IMPROVEMENTS WERE CONSTRUCTED PER PLANS. THE AS-BUILT SET SHALL SHOW ELEVATIONS OF ALL DETENTION/WATER QUALITY FACILITIES, INCLUDING BUT NOT LIMITED TO BERMS, SPILLWAYS, BASIN BOTTOM, PIPE INVERTS, AND CONTROL STRUCTURE FEATURES (AS SURVEYED AND STAMPED BY A CERTIFIED P.L.S.). THE AS-BUILT SET SHALL ALSO INCLUDE ELEVATIONS OF MANHOLES, PIPES, INLETS, GRATES, AND SIZES OF ALL UTILITIES. THE AS-BUILT SET SHALL SHOW ANY AND ALL VARIATIONS FROM THE APPROVED PLAN. ENGINEER WILL PRODUCE FINAL RECORD DRAWINGS.

DEMOLITION NOTES:

1. CONTRACTOR TO FIELD VERIFY ALL EXISTING UNDERGROUND UTILITIES PRIOR TO CONSTRUCTION. REFER TO GENERAL NOTES FOR UTILITY LOCATION AND PROTECTION.
2. ACTUAL LIMITS MAY VARY, CONTRACTOR IS RESPONSIBLE FOR ADJUSTING LIMITS OF DEMOLITION AND CONSTRUCTION AS NECESSARY. COORDINATE DEMOLITION REQUIREMENTS, LIMITS OF DEMOLITION, SALVAGE ITEMS, PROTECTION OF ITEMS TO REMAIN, TREES, FENCING, ETC. WITH OWNER, ARCHITECT, ENGINEER, AND RELEVANT CONSTRUCTION AND PHASING PLANS.
3. REPLACE EXISTING FLATWORK AT UTILITY TRENCHES AS REQUIRED.
4. ALL SAWCUTTING AND PAVEMENT REMOVAL SHOULD BE TO THE NEAREST JOINT.
5. ALL DRY UTILITY AND ELECTRIC DEMOLITION OR RELOCATION SHOULD BE COORDINATED WITH PROPERTY OWNER, UTILITY OWNER, MECHANICAL ENGINEER, AND ARCHITECT PRIOR TO CONSTRUCTION.
6. ALL NECESSARY EROSION AND SEDIMENTATION CONTROLS MUST BE INSTALLED PRIOR TO CONSTRUCTION.
7. CONTRACTOR TO COMPLY WITH ALL REGULATORY REQUIREMENTS FOR HAZARDOUS MATERIAL REMOVAL AND DISPOSAL.
8. REFER TO GENERAL NOTES FOR TREE PROTECTION. COORDINATE WITH LANDSCAPE ARCHITECT FOR TREE REMOVAL.
9. CONTRACTOR TO MAINTAIN SAFE PEDESTRIAN ACCESS. PROVIDE TEMPORARY ROUTE AND SIGNAGE AS NEEDED.
10. CONTRACTOR TO TAKE NECESSARY PRECAUTIONS TO PROTECT AND MAINTAIN SERVICES DURING CONSTRUCTION.
11. CONTRACTOR TO REPAIR/REPLACE ALL DAMAGE TO EXISTING FLATWORK OR SITE FEATURES NOT INTENDED FOR DEMOLITION.

EPC 7/12/2021

CONSULTING ENGINEERS
JVA, Inc. 1512 Larimer Street, Suite 710
Denver, CO 80202 303.444.1951
www.jvajva.com
Boulder • Fort Collins • Winter Park
Glenwood Springs • Denver

NO.	DATE	DES'D	D'WN	REVISION DESCRIPTION

KENNETH JAMES CLIFFORD
41654
7/1/2021

DESIGNED BY:	KCT/MHT
DRAWN BY:	JCD
CHECKED BY:	RAH/JJM
JOB #:	1051.6e
DATE:	JULY 2021

WOODMOOR WSD NO.1
LAKE PUMP STATION NO. 2 AND PIPELINE
EL PASO COUNTY, COLORADO

LEGEND, NOTES, & ABBREVIATIONS

SHEET NO.
G0.1

NOTES:

1. PARCELS AFFECTED BY THE PUMP STATION AND/OR THE TRANSMISSION MAIN ARE HIGHLIGHTED IN YELLOW. INFORMATION REGARDING THESE PARCELS IS INCLUDED IN THE "SITE DEVELOPMENT PLAN SUBJECT PROPERTY" AND "PROPERTIES AFFECTED BY TRANSMISSION PIPELINE" TABLES BELOW. EACH AFFECTED PARCEL IS ASSIGNED A REFERENCE LETTER FOR CLARITY. LEGAL DESCRIPTIONS ARE ATTACHED FOR REFERENCE.
2. ADJACENT PARCELS ARE SHOWN FOR REFERENCE. INFORMATION REGARDING THESE PARCELS IS INCLUDED IN THE "ADJACENT PROPERTIES" TABLES BELOW. EACH ADJACENT PARCEL IS ASSIGNED A REFERENCE NUMBER FOR CLARITY

150 0 150 300
SCALE IN FEET

SITE DEVELOPMENT PLAN SUBJECT PROPERTY

REFERENCE LETTER	PARCEL NUMBER	ADDRESS	PARCEL OWNER	ZONING DESIGNATION	LAND USE	PARCEL SIZE (AC)
A	7111400008	1596 LAKE WOODMOOR DRIVE	WOODMOOR WATER & SANITATION	R-4	PLANNED DEVELOPMENT	43.19

PROPERTIES AFFECTED BY TRANSMISSION PIPELINE

REFERENCE LETTER	PARCEL NUMBER	ADDRESS	PARCEL OWNER	ZONING DESIGNATION	LAND USE	PARCEL SIZE (AC)
B	7114107034	1592 LAKE WOODMOOR DRIVE	BEACH AT WOODMOOR HOA	PUD	HOMEOWNERS ASSOCIATION	0.66
C	7114112002	1640 LAKE WOODMOOR DRIVE	CS LAND COMPANY LLC	PUD	VACANT COMMERCIAL LOTS	1.20
D	7114112001	1680 LAKE WOODMOOR DRIVE	CS LAND COMPANY LLC	PUD	VACANT COMMERCIAL LOTS	1.34
E	7114200041		WOODMOOR WATER & SANITATION	C-2; RR-5	POLITICAL SUBDIVISION	4.68
F	7114205030	1754 WILLOW PARKWAY	DUNES AT WOODMOOR HOA	PUD	HOMEOWNERS ASSOCIATION	2.62
G	7111304014	1776 WOODMOOR DRIVE	LEWIS PALMER SCHOOL DISTRICT #38	RR-5	POLITICAL SUBDIVISION	21.63
H	7111304015	1765 DEER CREEK ROAD	WOODMOOR WATER & SANITATION	I-2	POLITICAL SUBDIVISION	2.32

ADJACENT PROPERTIES

REFERENCE NUMBER	PARCEL NUMBER	PARCEL OWNER	ZONING DESIGNATION	LAND USE
1	7111301009	REDNER FAMILY TRUST	CC	SPECIAL PURPOSE
2	7111301010	TRI-LAKES CHAPEL INC	A-5	RELIGIOUS WORSHIP
3	7111406056	WOODMOOR LAKEHOUSE ASSN INC	R-4	HOMEOWNERS ASSOCIATION
4	7111406055	WOODMOOR LAKEHOUSE ASSN INC	R-4	HOMEOWNERS ASSOCIATION
5	7111305005	WOODMOOR WATER & SANITATION	RR-5	POLITICAL SUBDIVISION
6	7111305034	VILLAGE AT MOOR-WOOD OWNERS ASSN	R-4	HOMEOWNERS ASSOCIATION
7	7114204018	TAHSK LLC	CC	RECREATION
8	7114205032	DUNES AT WOODMOOR HOMEOWNERS ASSN	R-4; PUD	HOMEOWNERS ASSOCIATION
9	7114207014	DUNES AT WOODMOOR HOMEOWNERS ASSN	R-4; PUD	HOMEOWNERS ASSOCIATION
10	7114208019	DUNES AT WOODMOOR HOMEOWNERS ASSN	PUD	HOMEOWNERS ASSOCIATION
11	7114205011	FORRISTAL JEFFREY	PUD	SINGLE FAMILY RES
12	7114205012	ILARRAZA ERIC	PUD	SINGLE FAMILY RES
13	7114205013	MATTEA MELISSA	PUD	SINGLE FAMILY RES
14	7114205014	FRIEND EVA K	PUD	SINGLE FAMILY RES
15	7114205015	MCGOUGH ALBERT C	PUD	SINGLE FAMILY RES

ADJACENT PROPERTIES

REFERENCE NUMBER	PARCEL NUMBER	PARCEL OWNER	ZONING DESIGNATION	LAND USE
16	7114205016	TRASK CRAIG	PUD	SINGLE FAMILY RES
17	7114205017	HARRIS NATHAN P	PUD	SINGLE FAMILY RES
18	7114205018	FLORIA JOHN JR	PUD	SINGLE FAMILY RES
19	7114205019	KRAEMER MAX W	PUD	SINGLE FAMILY RES
20	7114205020	ULRICH DAN L	PUD	SINGLE FAMILY RES
21	7114205021	HAMILTON-SMITH DAVID	PUD	SINGLE FAMILY RES
22	7114109007	JONES JENNIFER KRISTEN	PUD	VACANT RESIDENTIAL LOTS
23	7114109008	SARGENT GREGORY LEE	PUD	SINGLE FAMILY RES
24	7114100015	WOODMOOR WATER & SANITATION	RR-5	POLITICAL SUBDIVISION
25	7114109034	BEACH AT WOODMOOR HOA	PUD	HOMEOWNERS ASSOCIATION
26	7114107019	CAMPBELL HOMES LLC	PUD	SINGLE FAMILY RES
27	7114107020	CASEY JEFFREY S	PUD	SINGLE FAMILY RES
28	7114107021	KANGAS GARY E JR	PUD	SINGLE FAMILY RES
29	7114107022	MAGILL ROBERT T	PUD	SINGLE FAMILY RES

EPC 7/12/2021

JVA, Inc. 1512 Larimer Street, Suite 710
Denver, CO 80202 303.444.1951
www.jvajva.com
Boulder • Fort Collins • Winter Park
Glenwood Springs • Denver

NO.	DATE	DES'D	DWN	REVISION DESCRIPTION

COLORADO LICENSED PROFESSIONAL ENGINEER
KENNETH JAMES HOLT
41654
7/1/2021

DESIGNED BY:	RAH/MHT
DRAWN BY:	MHT
CHECKED BY:	JJM
JOB #:	1051.6e
DATE:	JULY 2021

WOODMOOR WSD NO.1
LAKE PUMP STATION NO. 2 AND PIPELINE
EL PASO COUNTY, COLORADO

VICINITY MAP

SHEET NO.
C0.1

N:\1051.6e\Drawings\1051.6e - Site Development Plan - Key Map.dwg, 7/01/2021 - 2:30 PM, mht

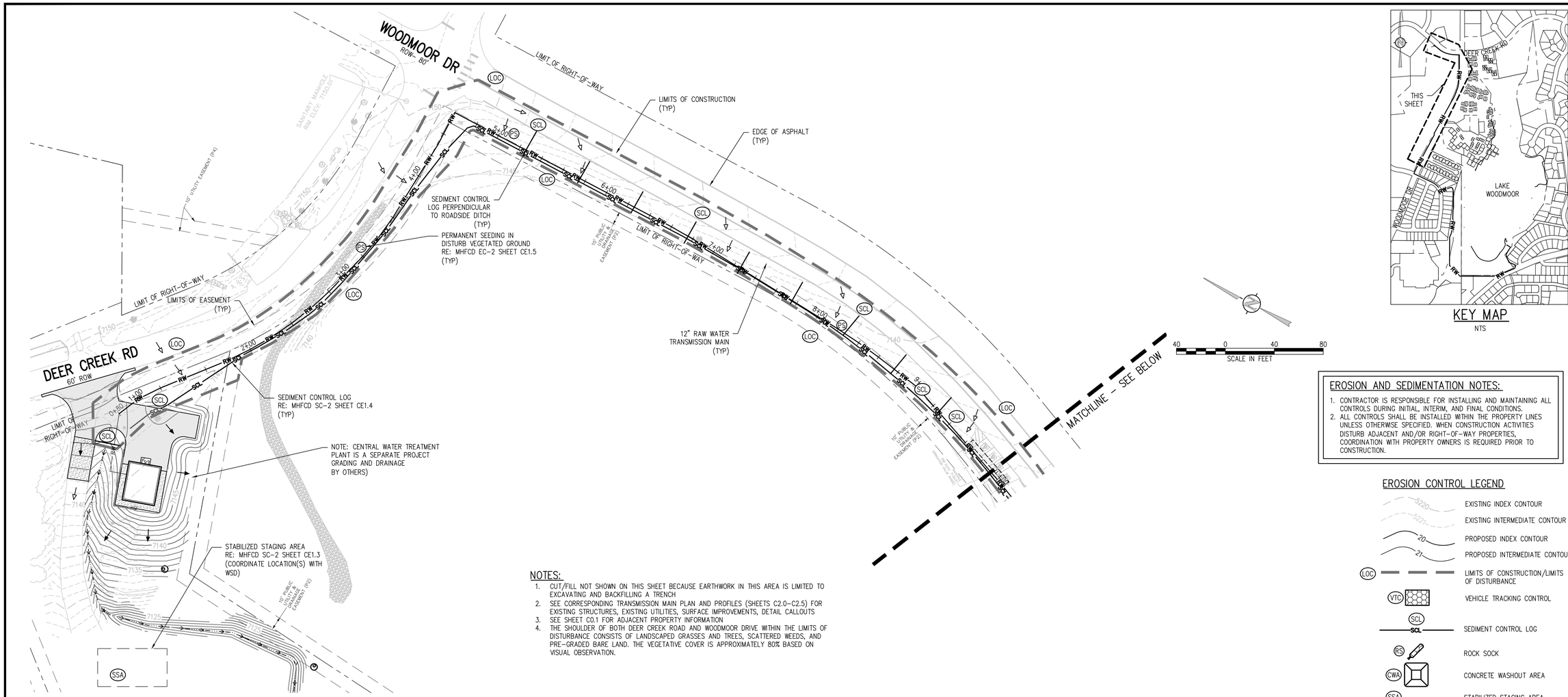

KEY MAP

NTS

NOTES:

1. CUT/FILL NOT SHOWN ON THIS SHEET BECAUSE EARTHWORK IN THIS AREA IS LIMITED TO EXCAVATING AND BACKFILLING A TRENCH
2. SEE CORRESPONDING TRANSMISSION MAIN PLAN AND PROFILES (SHEETS C2.0–C2.5) FOR EXISTING STRUCTURES, EXISTING UTILITIES, SURFACE IMPROVEMENTS, DETAIL CALLOUTS
3. SEE SHEET C0.1 FOR ADJACENT PROPERTY INFORMATION
4. THE SHOULDER OF BOTH DEER CREEK ROAD AND WOODMOOR DRIVE WITHIN THE LIMITS OF DISTURBANCE CONSISTS OF LANDSCAPED GRASSES AND TREES, SCATTERED WEEDS, AND PRE-GRADED BARE LAND. THE VEGETATIVE COVER IS APPROXIMATELY 80% BASED ON VISUAL OBSERVATION.

EROSION AND SEDIMENTATION NOTES:

1. CONTRACTOR IS RESPONSIBLE FOR INSTALLING AND MAINTAINING ALL CONTROLS DURING INITIAL, INTERIM, AND FINAL CONDITIONS.
2. ALL CONTROLS SHALL BE INSTALLED WITHIN THE PROPERTY LINES UNLESS OTHERWISE SPECIFIED. WHEN CONSTRUCTION ACTIVITIES DISTURB ADJACENT AND/OR RIGHT-OF-WAY PROPERTIES, COORDINATION WITH PROPERTY OWNERS IS REQUIRED PRIOR TO CONSTRUCTION.

EROSION CONTROL LEGEND

- EXISTING INDEX CONTOUR
- EXISTING INTERMEDIATE CONTOUR
- PROPOSED INDEX CONTOUR
- PROPOSED INTERMEDIATE CONTOUR
- LOC — LIMITS OF CONSTRUCTION/LIMITS OF DISTURBANCE
- VTC — VEHICLE TRACKING CONTROL
- SCL — SEDIMENT CONTROL LOG
- RS — ROCK SOCK
- CWA — CONCRETE WASHOUT AREA
- SSA — STABILIZED STAGING AREA
- PS — PERMANENT SEEDING
- HISTORIC DRAINAGE PATTERN
- PROPOSED DRAINAGE PATTERN

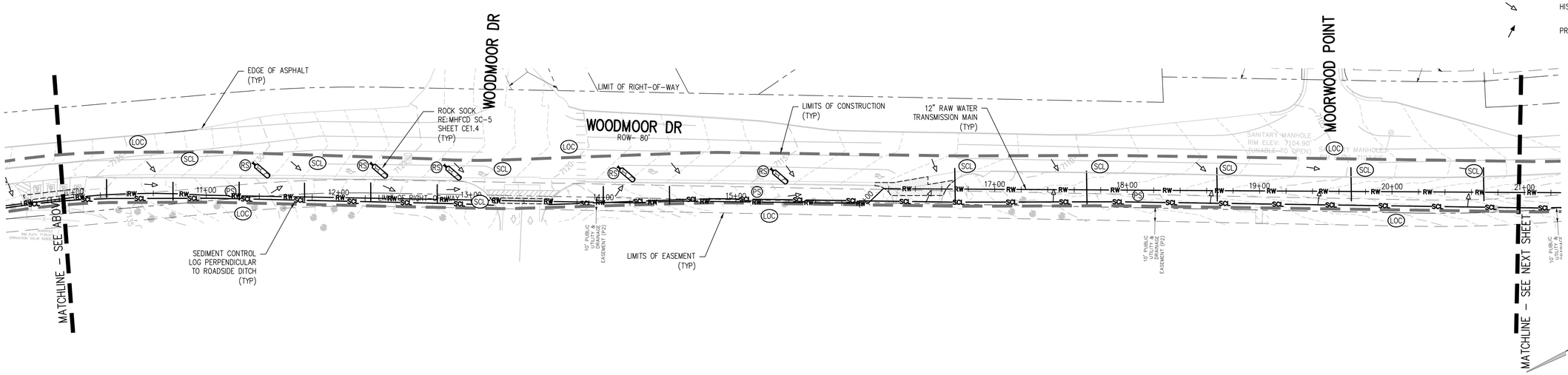

JVA, Inc. 1512 Larimer Street, Suite 710
Denver, CO 80202 303.444.1951
www.jvajva.com
Boulder • Fort Collins • Winter Park
Glenwood Springs • Denver

NO.	DATE	DES'D	DWN	REVISION DESCRIPTION

COLORADO LICENSED PROFESSIONAL ENGINEER KENNETH JAMES FIEDLER 41654 7/1/2021

DESIGNED BY:	RAH/MHT
DRAWN BY:	MHT
CHECKED BY:	JJM
JOB #:	1051.6e
DATE:	JULY 2021

WOODMOOR WSD NO.1
LAKE PUMP STATION NO. 2 AND PIPELINE
EL PASO COUNTY, COLORADO

EROSION CONTROL PLAN

SHEET NO.

CE1.0

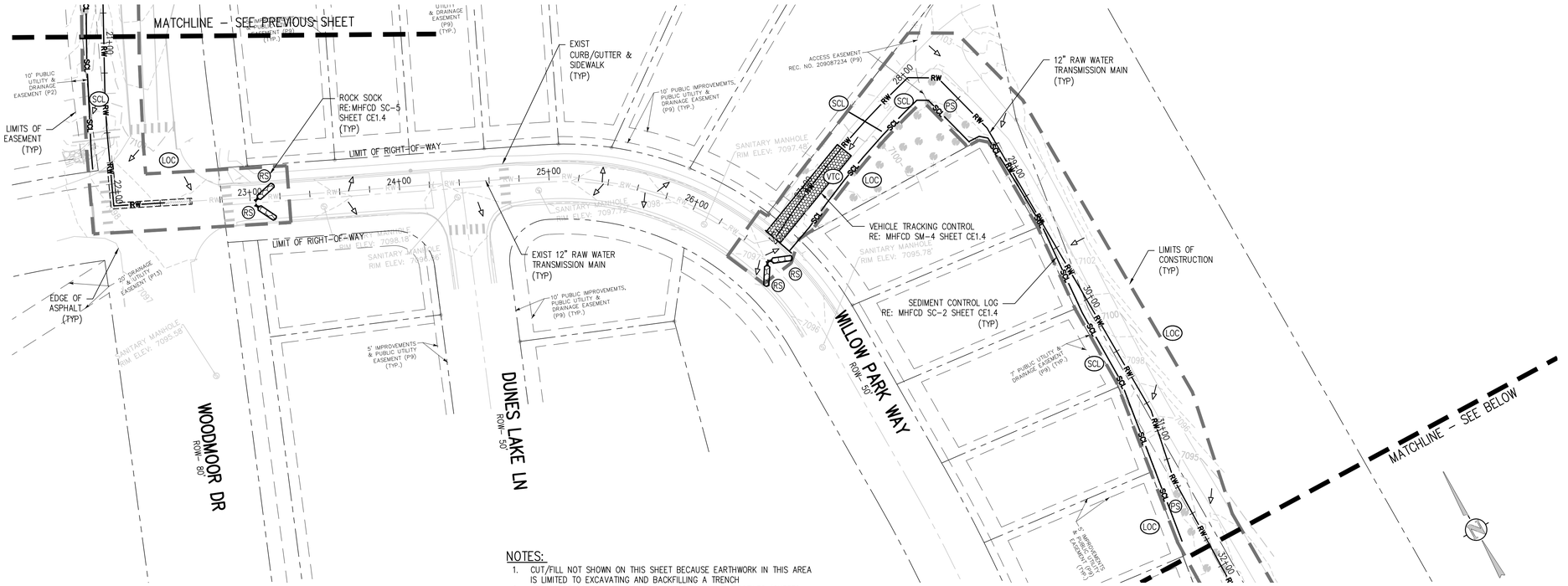

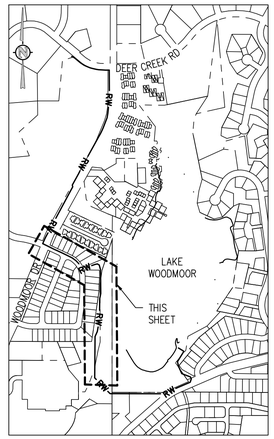

KEY MAP

NTS

NOTES:

1. CUT/FILL NOT SHOWN ON THIS SHEET BECAUSE EARTHWORK IN THIS AREA IS LIMITED TO EXCAVATING AND BACKFILLING A TRENCH
2. SEE CORRESPONDING TRANSMISSION MAIN PLAN AND PROFILES (SHEETS C2.0–C2.5) FOR EXISTING STRUCTURES, EXISTING UTILITIES, SURFACE IMPROVEMENTS, DETAIL CALLOUTS
3. SEE SHEET C0.1 FOR ADJACENT PROPERTY INFORMATION
4. THE SHOULDER OF WOODMOOR DRIVE WITHIN THE LIMITS OF DISTURBANCE CONSISTS OF LANDSCAPED GRASSES AND TREES, SCATTERED WEEDS, AND PRE–GRADED BARE LAND. THE AREA SURROUNDING THE WALKING PATH ADJACENT TO THE LAKE'S DAM TOE CONSISTS OF NATIVE GRASSES AND SHRUBS, SCATTERED WEEDS, AND PRE–GRADED BARE LAND. LANDSCAPED TREES AND GRASSES EXIST DIRECTLY ADJACENT TO THE HOMES ALONG WILLOW PARK WAY. THE VEGETATIVE COVER WITHIN THE LIMITS OF DISTURBANCE IS APPROXIMATELY 80% BASED ON VISUAL OBSERVATION.

EROSION AND SEDIMENTATION NOTES:

1. CONTRACTOR IS RESPONSIBLE FOR INSTALLING AND MAINTAINING ALL CONTROLS DURING INITIAL, INTERIM, AND FINAL CONDITIONS.
2. ALL CONTROLS SHALL BE INSTALLED WITHIN THE PROPERTY LINES UNLESS OTHERWISE SPECIFIED. WHEN CONSTRUCTION ACTIVITIES DISTURB ADJACENT AND/OR RIGHT–OF–WAY PROPERTIES, COORDINATION WITH PROPERTY OWNERS IS REQUIRED PRIOR TO CONSTRUCTION.

40 0 40 80
SCALE IN FEET

EROSION CONTROL LEGEND

- EXISTING INDEX CONTOUR
- EXISTING INTERMEDIATE CONTOUR
- PROPOSED INDEX CONTOUR
- PROPOSED INTERMEDIATE CONTOUR
- LOC — LIMITS OF CONSTRUCTION/LIMITS OF DISTURBANCE
- VTC — VEHICLE TRACKING CONTROL
- SCL — SEDIMENT CONTROL LOG
- RS — ROCK SOCK
- CWA — CONCRETE WASHOUT AREA
- SSA — STABILIZED STAGING AREA
- PS — PERMANENT SEEDING
- HISTORIC DRAINAGE PATTERN
- PROPOSED DRAINAGE PATTERN

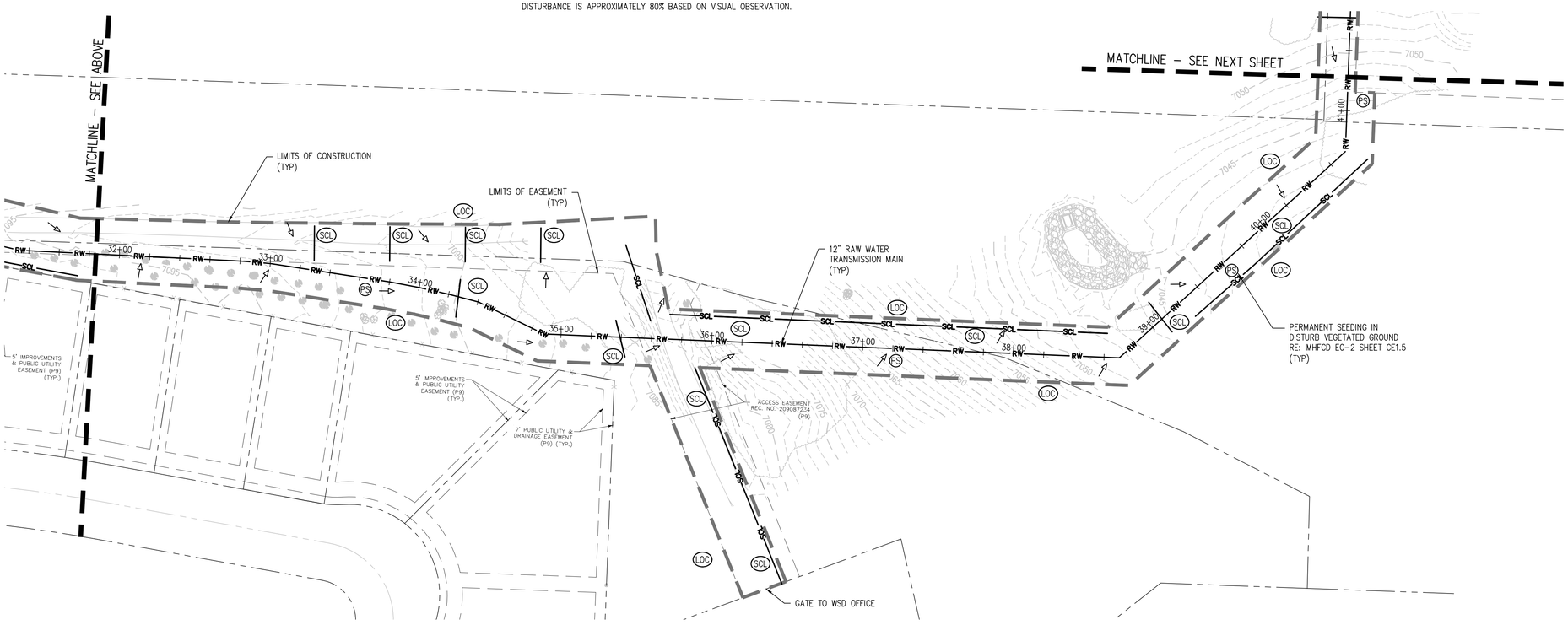

EPC 7/12/2021

40 0 40 80
SCALE IN FEET

JVA, Inc. 1512 Larimer Street, Suite 710
Denver, CO 80202 303.444.1951
www.jvajva.com
Boulder • Fort Collins • Winter Park
Glenwood Springs • Denver

NO.	DATE	DES'D	DWN	REVISION DESCRIPTION

COLORADO LICENSED PROFESSIONAL ENGINEER KENNETH JAMES MCHUGH 41654 7/1/2021

DESIGNED BY:	RAH/MHT
DRAWN BY:	MHT
CHECKED BY:	JJM
JOB #:	1051.6e
DATE:	JULY 2021

WOODMOOR WSD NO.1
LAKE PUMP STATION NO. 2 AND PIPELINE
EL PASO COUNTY, COLORADO

EROSION CONTROL PLAN

SHEET NO.
CE1.1

N:\1051.6e\Drawings\1051.6e – Site Development Plan – ECP.dwg, 7/01/2021 – 2:30 PM, mht

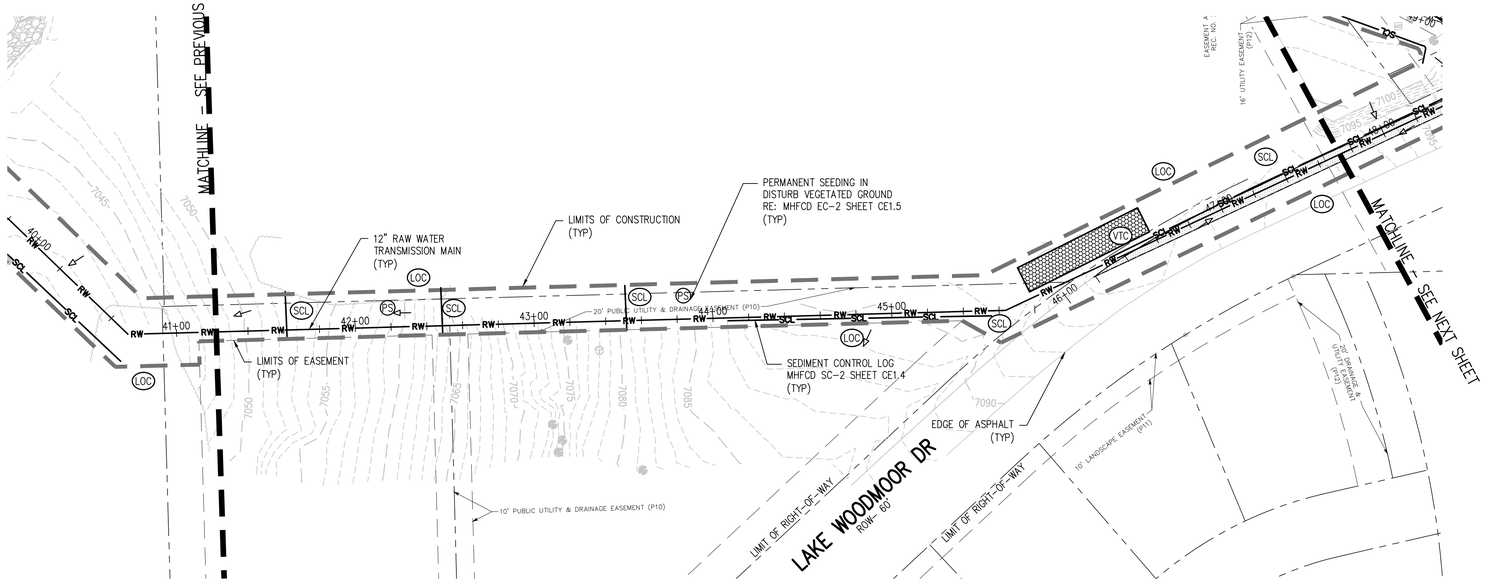

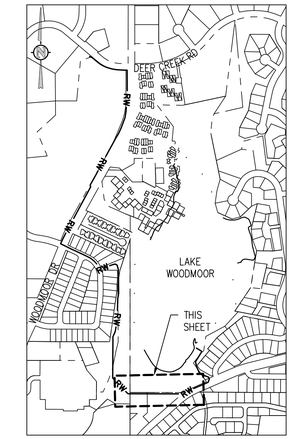

KEY MAP

NTS

NOTES:

1. CUT/FILL NOT SHOWN ON THIS SHEET BECAUSE EARTHWORK IN THIS AREA IS LIMITED TO EXCAVATING AND BACKFILLING A TRENCH
2. SEE CORRESPONDING TRANSMISSION MAIN PLAN AND PROFILES (SHEETS C2.0–C2.5) FOR EXISTING STRUCTURES, EXISTING UTILITIES, SURFACE IMPROVEMENTS, DETAIL CALLOUTS
3. SEE SHEET C0.1 FOR ADJACENT PROPERTY INFORMATION
4. THE AREA SURROUNDING THE WALKING PATH ADJACENT TO THE LAKE'S DAM TOE AS WELL AS THE SHOULDER OF LAKE WOODMOOR DRIVE WITHIN THE LIMITS OF DISTURBANCE CONSISTS OF NATIVE GRASSES AND SHRUBS, SCATTERED WEEDS AND TREES, AND PRE-GRADED BARE LAND. THE VEGETATIVE COVER WITHIN THE LIMITS OF DISTURBANCE IS APPROXIMATELY 80% BASED ON VISUAL OBSERVATION.

40 0 40 80

SCALE IN FEET

EROSION AND SEDIMENTATION NOTES:

1. CONTRACTOR IS RESPONSIBLE FOR INSTALLING AND MAINTAINING ALL CONTROLS DURING INITIAL, INTERIM, AND FINAL CONDITIONS.
2. ALL CONTROLS SHALL BE INSTALLED WITHIN THE PROPERTY LINES UNLESS OTHERWISE SPECIFIED. WHEN CONSTRUCTION ACTIVITIES DISTURB ADJACENT AND/OR RIGHT-OF-WAY PROPERTIES, COORDINATION WITH PROPERTY OWNERS IS REQUIRED PRIOR TO CONSTRUCTION.

EROSION CONTROL LEGEND

- 5220 — EXISTING INDEX CONTOUR
- 5221 — EXISTING INTERMEDIATE CONTOUR
- 20 — PROPOSED INDEX CONTOUR
- 21 — PROPOSED INTERMEDIATE CONTOUR
- LOC — LIMITS OF CONSTRUCTION/LIMITS OF DISTURBANCE
- VTC — VEHICLE TRACKING CONTROL
- SCL — SEDIMENT CONTROL LOG
- RS — ROCK SOCK
- CWA — CONCRETE WASHOUT AREA
- SSA — STABILIZED STAGING AREA
- PS — PERMANENT SEEDING
- HISTORIC DRAINAGE PATTERN
- PROPOSED DRAINAGE PATTERN

EPC 7/12/2021

JVA, Inc. 1512 Larimer Street, Suite 710
Denver, CO 80202 303.444.1951
www.jvajva.com
Boulder • Fort Collins • Winter Park
Glenwood Springs • Denver

NO.	DATE	DES'D	DWN	REVISION DESCRIPTION

COLORADO LICENSED PROFESSIONAL ENGINEER KENNETH JAMES MCHUGH 41654 7/1/2021

DESIGNED BY:	RAH/MHT
DRAWN BY:	MHT
CHECKED BY:	JJM
JOB #:	1051.6e
DATE:	JULY 2021

WOODMOOR WSD NO.1
LAKE PUMP STATION NO. 2 AND PIPELINE
EL PASO COUNTY, COLORADO

EROSION CONTROL PLAN

SHEET NO.

CE1.2

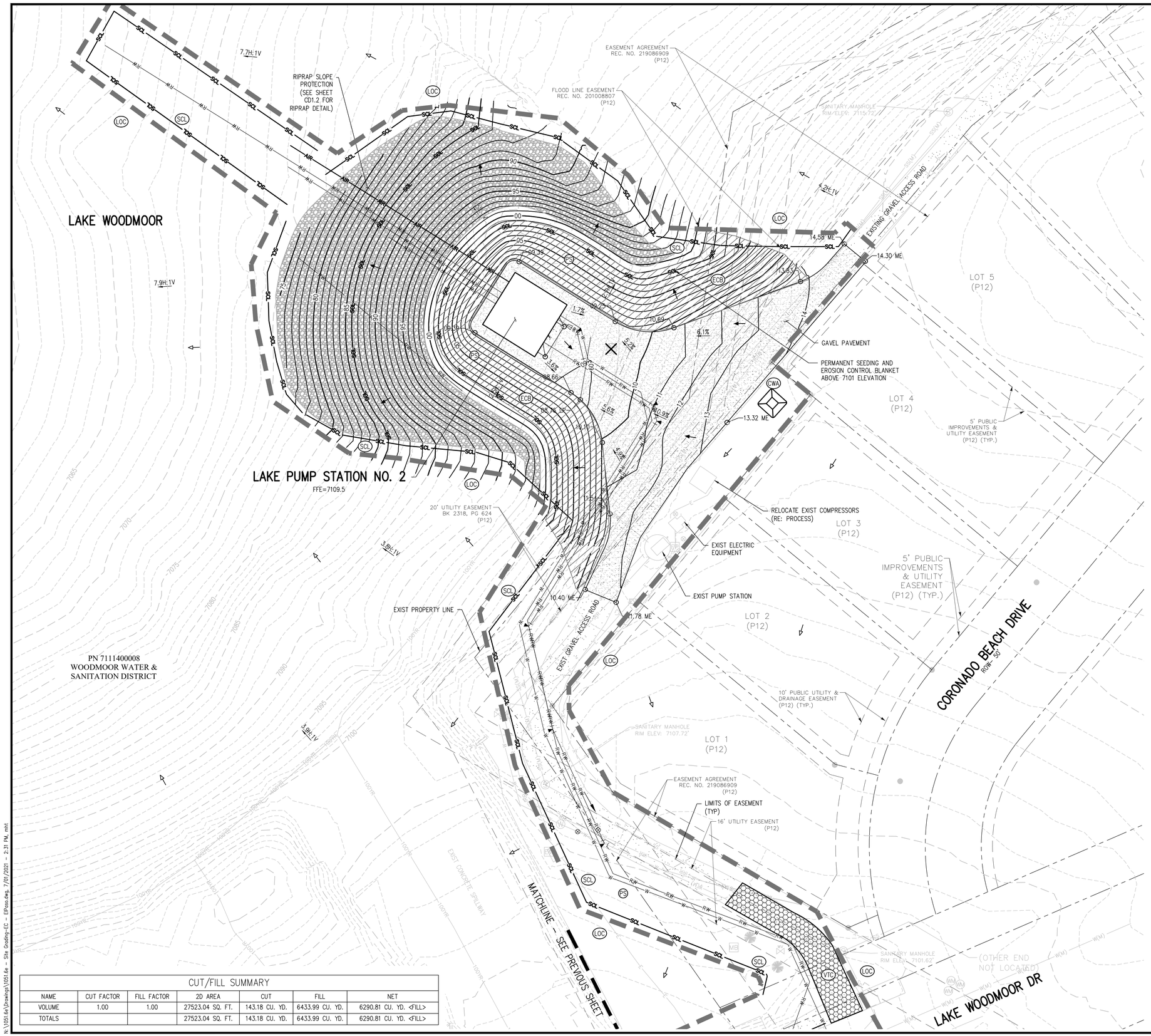

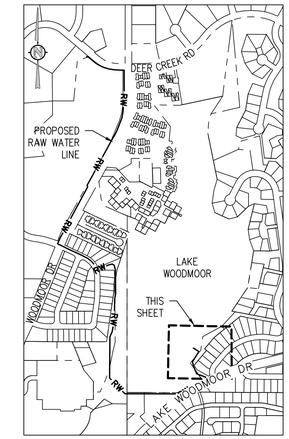

KEY MAP

NTS

EROSION AND SEDIMENTATION NOTES:

1. CONTRACTOR IS RESPONSIBLE FOR INSTALLING AND MAINTAINING ALL CONTROLS DURING INITIAL, INTERIM, AND FINAL CONDITIONS.
2. ALL CONTROLS SHALL BE INSTALLED WITHIN THE PROPERTY LINES UNLESS OTHERWISE SPECIFIED. WHEN CONSTRUCTION ACTIVITIES DISTURB ADJACENT AND/OR RIGHT-OF-WAY PROPERTIES, COORDINATION WITH PROPERTY OWNERS IS REQUIRED PRIOR TO CONSTRUCTION.

EROSION CONTROL LEGEND

- EXISTING INDEX CONTOUR
- EXISTING INTERMEDIATE CONTOUR
- PROPOSED INDEX CONTOUR
- PROPOSED INTERMEDIATE CONTOUR
- LOC — LIMITS OF CONSTRUCTION
- VTC — VEHICLE TRACKING CONTROL
- SCL — SEDIMENT CONTROL LOG
- CWA — CONCRETE WASHOUT AREA
- PS — PERMANENT SEEDING
- ECB — EROSION CONTROL BLANKET
- HISTORIC DRAINAGE PATTERN
- PROPOSED DRAINAGE PATTERN

NOTES:

1. SEE CORRESPONDING TRANSMISSION MAIN PLAN AND PROFILES (SHEETS C2.0–C2.5) FOR EXISTING STRUCTURES, EXISTING UTILITIES, SURFACE IMPROVEMENTS, DETAIL CALLOUTS
2. SEE SHEET C0.1 FOR ADJACENT PROPERTY INFORMATION
3. THE AREA SURROUNDING THE SHOULDER OF LAKE WOODMOOR DRIVE WITHIN THE LIMITS OF DISTURBANCE AS WELL AS THE AREA SURROUNDING THE EXISTING PUMP STATION ACCESS PATH CONSISTS OF NATIVE GRASSES AND SHRUBS, SCATTERED WEEDS AND TREES, AND PRE-GRADED BARE LAND. THE VEGETATIVE COVER WITHIN THE LIMITS OF DISTURBANCE IS APPROXIMATELY 80% BASED ON VISUAL OBSERVATION. IT IS ASSUMED THE AREA DIRECTLY ADJACENT TO THE HOMES ON CORONADO DRIVE WILL CONSIST OF LANDSCAPED GRASSES AND TREES.

EPC 7/12/2021

20 0 20 40
SCALE IN FEET

CUT/FILL SUMMARY

NAME	CUT FACTOR	FILL FACTOR	2D AREA	CUT	FILL	NET
VOLUME	1.00	1.00	27523.04 SQ. FT.	143.18 CU. YD.	6433.99 CU. YD.	6290.81 CU. YD. <FILL>
TOTALS			27523.04 SQ. FT.	143.18 CU. YD.	6433.99 CU. YD.	6290.81 CU. YD. <FILL>

CONSULTING ENGINEERS
JVA, Inc. 1512 Larimer Street, Suite 710
Denver, CO 80202 303.444.1951
www.jvajva.com
Boulder • Fort Collins • Winter Park
Glenwood Springs • Denver

NO.	DATE	DES'D	DWN	REVISION DESCRIPTION

COLORADO LICENSED PROFESSIONAL ENGINEER KENNETH JAMES TAYLOR 41654 7/1/2021

DESIGNED BY:	KCT
DRAWN BY:	JGJ
CHECKED BY:	KJC
JOB #:	1051.6e
DATE:	JULY 2021

WOODMOOR WSD NO.1
LAKE PUMP STATION NO. 2 AND PIPELINE
EL PASO COUNTY, COLORADO

GRADING AND EROSION CONTROL PLAN

SHEET NO.
CE1.3

N:\1051.6e\Drawings\1051.6e - Site Grading-EC - ElPaso.dwg, 7/01/2021 - 2:31 PM, mht

STANDARD NOTES FOR EL PASO COUNTY GRADING AND EROSION CONTROL PLANS

1. STORMWATER DISCHARGES FROM CONSTRUCTION SITES SHALL NOT CAUSE OR THREATEN TO CAUSE POLLUTION, CONTAMINATION, OR DEGRADATION OF STATE WATERS. ALL WORK AND EARTH DISTURBANCE SHALL BE DONE IN A MANNER THAT MINIMIZES POLLUTION OF ANY ON-SITE OR OFFSITE WATERS, INCLUDING WETLANDS.
2. NOTWITHSTANDING ANYTHING DEPICTED IN THESE PLANS IN WORDS OR GRAPHIC REPRESENTATION, ALL DESIGN AND CONSTRUCTION RELATED TO ROADS, STORM DRAINAGE AND EROSION CONTROL SHALL CONFORM TO THE STANDARDS AND REQUIREMENTS OF THE MOST RECENT VERSION OF THE RELEVANT ADOPTED EL PASO COUNTY STANDARDS, INCLUDING THE LAND DEVELOPMENT CODE, THE ENGINEERING CRITERIA MANUAL, THE DRAINAGE CRITERIA MANUAL, AND THE DRAINAGE CRITERIA MANUAL VOLUME 2. ANY DEVIATIONS TO REGULATIONS AND STANDARDS MUST BE REQUESTED, AND APPROVED, IN WRITING.
3. A SEPARATE STORMWATER MANAGEMENT PLAN (SMWP) FOR THIS PROJECT SHALL BE COMPLETED AND AN EROSION AND STORMWATER QUALITY CONTROL PERMIT (ESQCP) ISSUED PRIOR TO COMMENCING CONSTRUCTION. DURING CONSTRUCTION THE SWMP IS THE RESPONSIBILITY OF THE DESIGNATED QUALIFIED STORMWATER MANAGER OR CERTIFIED EROSION CONTROL INSPECTOR AND SHALL BE LOCATED ON SITE AT ALL TIMES DURING CONSTRUCTION AND SHALL BE KEPT UP TO DATE WITH WORK PROGRESS AND CHANGES IN THE FIELD.
4. ONCE THE ESQCP IS APPROVED AND A "NOTICE TO PROCEED" HAS BEEN ISSUED, THE CONTRACTOR MAY INSTALL THE INITIAL STAGE EROSION AND SEDIMENT CONTROL MEASURES AS INDICATED ON THE APPROVED GEC. A PRECONSTRUCTION MEETING BETWEEN THE CONTRACTOR, ENGINEER, AND EL PASO COUNTY WILL BE HELD PRIOR TO ANY CONSTRUCTION. IT IS THE RESPONSIBILITY OF THE APPLICANT TO COORDINATE THE MEETING TIME AND PLACE WITH COUNTY STAFF.
5. CONTROL MEASURES MUST BE INSTALLED PRIOR TO COMMENCEMENT OF ACTIVITIES THAT MAY CONTRIBUTE POLLUTANTS TO STORMWATER. TEMPORARY SEDIMENT AND EROSION CONTROL MEASURES FOR ALL SLOPES, CHANNELS, DITCHES, OR ANY DISTURBED LAND AREA SHALL BE COMPLETED IMMEDIATELY UPON COMPLETION OF THE DISTURBANCE.
6. ALL TEMPORARY SEDIMENT AND EROSION CONTROL MEASURES SHALL BE MAINTAINED AND REMAIN IN EFFECTIVE OPERATING CONDITION UNTIL PERMANENT SOIL EROSION CONTROL MEASURES ARE IMPLEMENTED AND FINAL STABILIZATION IS ESTABLISHED. ALL PERSONS ENGAGED IN LAND DISTURBANCE ACTIVITIES SHALL ASSESS THE ADEQUACY OF CONTROL MEASURES AT THE SITE AND IDENTIFY IF CHANGES TO THOSE CONTROL MEASURES IS NEEDED TO ENSURE THE CONTINUED EFFECTIVE PERFORMANCE OF THE CONTROL MEASURES. ALL CHANGES TO TEMPORARY SEDIMENT AND EROSION CONTROL MEASURES MUST BE INCORPORATED INTO THE STORMWATER MANAGEMENT PLAN PRIOR TO IMPLEMENTATION.
7. TEMPORARY STABILIZATION SHALL BE IMPLEMENTED ON DISTURBED AREAS AND STOCKPILES WHERE GROUND DISTURBING CONSTRUCTION ACTIVITY HAS PERMANENTLY CEASED OR TEMPORARILY CEASED FOR LONGER THAN 14 DAYS. AN AREA THAT IS GOING TO REMAIN IN AN INTERIM STATE FOR MORE THAN 60 DAYS SHALL ALSO BE STABILIZED.
8. FINAL STABILIZATION MUST BE IMPLEMENTED AT ALL APPLICABLE CONSTRUCTION SITES. FINAL STABILIZATION IS ACHIEVED WHEN ALL GROUND DISTURBING ACTIVITIES ARE COMPLETE AND ALL DISTURBED AREAS EITHER HAVE A UNIFORM VEGETATIVE COVER WITH INDIVIDUAL PLAN DENSITY OF 70 PERCENT OF PRE-DISTURBANCE LEVELS ESTABLISHED OR EQUIVALENT PERMANENT ALTERNATIVE STABILIZATION METHOD IS IMPLEMENTED. ALL TEMPORARY SEDIMENT AND EROSION CONTROL MEASURES SHALL BE REMOVED UPON FINAL STABILIZATION AND BEFORE PERMIT CLOSURE.
9. ALL PERMANENT STORMWATER MANAGEMENT FACILITIES SHALL BE INSTALLED AS DEFINED IN THE APPROVED PLANS. ANY PROPOSED CHANGES THAT EFFECT THE HYDROLOGY OR HYDRAULICS OF A PERMANENT STORMWATER MANAGEMENT STRUCTURES MUST BE APPROVED BY THE ECM ADMINISTRATOR PRIOR TO IMPLEMENTATION.
10. ANY EARTH DISTURBANCE SHALL BE CONDUCTED IN SUCH A MANNER SO AS TO EFFECTIVELY MINIMIZE ACCELERATED SOIL EROSION AND RESULTING SEDIMENTATION. ALL DISTURBANCES SHALL BE DESIGNED, CONSTRUCTED, AND COMPLETED SO THAT THE EXPOSED AREA OF ANY DISTURBED LAND SHALL BE LIMITED TO THE SHORTEST PRACTICAL PERIOD OF TIME. PRE-EXISTING VEGETATION SHALL BE PROTECTED AND MAINTAINED WITHIN 50 HORIZONTAL FEET OF A WATERS OF THE STATE, UNLESS INFEASIBLE.
11. COMPACTION OF SOIL MUST BE PREVENTED IN AREAS DESIGNATED FOR INFILTRATION CONTROL MEASURES OR WHERE FINAL STABILIZATION WILL BE ACHIEVED BY VEGETATIVE COVER. AREAS DESIGNATED FOR INFILTRATION CONTROL SHALL ALSO BE PROTECTED FROM SEDIMENTATION DURING CONSTRUCTION UNTIL FINAL STABILIZATION IS ACHIEVED.
12. ANY TEMPORARY OR PERMANENT FACILITY DESIGNED AND CONSTRUCTED FOR THE CONVEYANCE OF STORMWATER AROUND, THROUGH, OR FROM THE EARTH DISTURBANCE AREA SHALL BE A STABILIZED CONVEYANCE DESIGNED TO MINIMIZE EROSION AND THE DISCHARGE OF SEDIMENT OFF SITE.
13. CONCRETE WASH WATER SHALL BE CONTAINED AND DISPOSED OF IN ACCORDANCE WITH THE SWMP. NO WASH WATER SHALL BE DISCHARGED TO OR ALLOWED TO RUNOFF TO STATE WATERS, INCLUDING ANY SURFACE OR SUBSURFACE STORM DRAINAGE SYSTEM OR FACILITIES. CONCRETE WASHOUT SHALL NOT BE LOCATED IN AN AREA WHERE SHALLOW GROUNDWATER MAY BE PRESENT, OR WITHIN 50 FEET OF A SURFACE WATER BODY.
14. DEWATERING OPERATIONS: UNCONTAMINATED GROUND WATER MAY BE DISCHARGED ON SITE, BUT MAY NOT LEAVE THE SITE IN THE FORM OF SURFACE RUNOFF.
15. EROSION CONTROL BLANKETING IS TO BE USED ON SLOPES STEEPER THAN 3:1.
16. CONTRACTOR SHALL BE RESPONSIBLE FOR THE REMOVAL OF ALL WASTES FROM CONSTRUCTION SITES FOR DISPOSAL IN ACCORDANCE WITH LOCAL AND STATE REGULATORY REQUIREMENTS. NO CONSTRUCTION DEBRIS, TREE SLASH, BUILDING MATERIAL WASTES, OR UNUSED BUILDING MATERIALS SHALL BE BURIED, DUMPED, OR DISCHARGED AT THE SITE.
17. WASTE MATERIALS SHALL NOT BE TEMPORARILY PLACED OR STORED IN THE STREET, ALLEY, OR OTHER PUBLIC WAY, UNLESS IN ACCORDANCE WITH AN APPROVED TRAFFIC CONTROL PLAN. CONTROL MEASURES MAY BE REQUIRED BY EL PASO COUNTY ENGINEERING IF DEEMED NECESSARY, BASED ON SPECIFIC CONDITIONS AND CIRCUMSTANCES.
18. TRACKING OF SOILS AND CONSTRUCTION DEBRIS OFF-SITE SHALL BE MINIMIZED. MATERIALS TRACKED OFF-SITE SHALL BE CLEANED UP AND PROPERLY DISPOSED OF IMMEDIATELY.
19. THE OWNER, SITE DEVELOPER, CONTRACTOR, AND/OR THEIR AUTHORIZED AGENTS SHALL BE RESPONSIBLE FOR THE REMOVAL OF ALL CONSTRUCTION DEBRIS, DIRT, TRASH, ROCK, SEDIMENT, AND SAND THAT MAY ACCUMULATE IN THE STORM SEWER OR OTHER DRAINAGE CONVEYANCE SYSTEM AND STORMWATER APPURTENANCES AS A RESULT OF SITE DEVELOPMENT.
20. THE QUANTITY OF MATERIALS STORED ON THE PROJECT SITE SHALL BE LIMITED, AS MUCH AS PRACTICAL, TO THAT QUANTITY REQUIRED TO PERFORM THE WORK IN AN ORDERLY SEQUENCE. ALL MATERIALS STORED ON-SITE SHALL BE STORED IN A NEAT, ORDERLY MANNER, IN THEIR ORIGINAL CONTAINERS, WITH ORIGINAL MANUFACTURER'S LABELS.
21. NO CHEMICALS ARE TO BE USED BY THE CONTRACTOR, WHICH HAVE THE POTENTIAL TO BE RELEASED IN STORMWATER UNLESS PERMISSION FOR THE USE OF A SPECIFIC CHEMICAL IS GRANTED IN WRITING BY THE ECM ADMINISTRATOR. IN GRANTING THE USE OF SUCH CHEMICALS, SPECIAL CONDITIONS AND MONITORING MAY BE REQUIRED.
22. BULK STORAGE OF PETROLEUM PRODUCTS OR OTHER LIQUID CHEMICALS IN EXCESS OF 55 GALLONS SHALL HAVE ADEQUATE SECONDARY CONTAINMENT PROTECTION TO CONTAIN ALL SPILLS AND PREVENT ANY SPILLED MATERIAL FROM ENTERING STATE WATERS, INCLUDING ANY SURFACE OR SUBSURFACE STORM DRAINAGE SYSTEM OR FACILITIES.
23. NO PERSON SHALL CAUSE THE IMPEDIMENT OF STORMWATER FLOW IN THE CURB AND GUTTER OR DITCH EXCEPT WITH APPROVED SEDIMENT CONTROL MEASURES.
24. INDIVIDUALS SHALL COMPLY WITH THE "COLORADO WATER QUALITY CONTROL ACT" (TITLE 25, ARTICLE 8, CRS), AND THE "CLEAN WATER ACT" (33 USC 1344), IN ADDITION TO THE REQUIREMENTS INCLUDED IN THE DCM VOLUME II AND THE ECM APPENDIX I. ALL APPROPRIATE PERMITS MUST BE OBTAINED BY THE CONTRACTOR PRIOR TO CONSTRUCTION (NPDES, FLOODPLAIN, 404, FUGITIVE DUST, ETC.). IN THE EVENT OF CONFLICTS BETWEEN THESE REQUIREMENTS AND LAWS, RULES, OR REGULATIONS OF OTHER FEDERAL, STATE, OR COUNTY AGENCIES, THE MORE RESTRICTIVE LAWS, RULES, OR REGULATIONS SHALL APPLY.
25. ALL CONSTRUCTION TRAFFIC MUST ENTER/EXIT THE SITE AT APPROVED CONSTRUCTION ACCESS POINTS.
26. PRIOR TO ACTUAL CONSTRUCTION THE PERMITEE SHALL VERIFY THE LOCATION OF EXISTING UTILITIES.
27. A WATER SOURCE SHALL BE AVAILABLE ON SITE DURING EARTHWORK OPERATIONS AND UTILIZED AS REQUIRED TO MINIMIZE DUST FROM EARTHWORK EQUIPMENT AND WIND.
28. THE SOILS REPORT FOR THIS SITE HAS BEEN PREPARED BY TERRACON (DECEMBER 2020) AND SHALL BE CONSIDERED A PART OF THESE PLANS.
29. AT LEAST TEN (10) DAYS PRIOR TO THE ANTICIPATED START OF CONSTRUCTION, FOR PROJECTS THAT WILL DISTURB 1 ACRE OR MORE, THE OWNER OR OPERATOR OF CONSTRUCTION ACTIVITY SHALL SUBMIT A PERMIT APPLICATION FOR STORMWATER DISCHARGE TO THE COLORADO DEPARTMENT OF PUBLIC HEALTH AND ENVIRONMENT, WATER QUALITY DIVISION. THE APPLICATION CONTAINS CERTIFICATION OF COMPLETION OF A STORMWATER MANAGEMENT PLAN (SWMP), OF WHICH THIS GRADING AND EROSION CONTROL PLAN MAY BE A PART. FOR INFORMATION OR APPLICATION MATERIALS CONTACT:

COLORADO DEPARTMENT OF PUBLIC HEALTH AND ENVIRONMENT
WATER QUALITY CONTROL DIVISION
WQCD - PERMITS
4300 CHERRY CREEK DRIVE SOUTH
DENVER, CO 80246-1530
ATTN: PERMITS UNIT

STANDARD NOTES FOR EL PASO COUNTY CONSTRUCTION PLANS

1. ALL DRAINAGE AND ROADWAY CONSTRUCTION SHALL MEET THE STANDARDS AND SPECIFICATIONS OF THE CITY OF COLORADO SPRINGS/EL PASO COUNTY DRAINAGE CRITERIA MANUAL, VOLUMES 1 AND 2, AND THE EL PASO COUNTY ENGINEERING CRITERIA MANUAL.
2. CONTRACTOR SHALL BE RESPONSIBLE FOR THE NOTIFICATION AND FIELD NOTIFICATION OF ALL EXISTING UTILITIES, WHETHER SHOWN ON THE PLANS OR NOT, BEFORE BEGINNING CONSTRUCTION. LOCATION OF EXISTING UTILITIES SHALL BE VERIFIED BY THE CONTRACTOR PRIOR TO CONSTRUCTION. CALL 811 TO CONTACT THE UTILITY NOTIFICATION CENTER OF COLORADO (UNCC).
3. CONTRACTOR SHALL KEEP A COPY OF THESE APPROVED PLANS, THE GRADING AND EROSION CONTROL PLAN, THE STORMWATER MANAGEMENT PLAN (SWMP), THE SOILS AND GEOTECHNICAL REPORT, AND THE APPROPRIATE DESIGN AND CONSTRUCTION STANDARDS AND SPECIFICATIONS AT THE JOB SITE AT ALL TIMES, INCLUDING THE FOLLOWING:
   A.EL PASO COUNTY ENGINEERING CRITERIA MANUAL (ECM)
   B.CITY OF COLORADO SPRINGS/EL PASO COUNTY DRAINAGE CRITERIA MANUAL, VOLUMES 1 AND 2
   C.COLORADO DEPARTMENT OF TRANSPORTATION (CDOT) STANDARD SPECIFICATIONS FOR ROAD AND BRIDGE CONSTRUCTION
   D.CDOT M & S STANDARDS
4. NOTWITHSTANDING ANYTHING DEPICTED IN THESE PLANS IN WORDS OR GRAPHIC REPRESENTATION, ALL DESIGN AND CONSTRUCTION RELATED TO ROADS, STORM DRAINAGE AND EROSION CONTROL SHALL CONFORM TO THE STANDARDS AND REQUIREMENTS OF THE MOST RECENT VERSION OF THE RELEVANT ADOPTED EL PASO COUNTY STANDARDS, INCLUDING THE LAND DEVELOPMENT CODE, THE ENGINEERING CRITERIA MANUAL, THE DRAINAGE CRITERIA MANUAL, AND THE DRAINAGE CRITERIA MANUAL VOLUME 2. ANY DEVIATIONS FROM REGULATIONS AND STANDARDS MUST BE REQUESTED, AND APPROVED, IN WRITING. ANY MODIFICATIONS NECESSARY TO MEET CRITERIA AFTER-THE-FACT WILL BE ENTIRELY THE DEVELOPER'S RESPONSIBILITY TO RECTIFY.
5. IT IS THE DESIGN ENGINEER'S RESPONSIBILITY TO ACCURATELY SHOW EXISTING CONDITIONS, BOTH ONSITE AND OFFSITE, ON THE CONSTRUCTION PLANS. ANY MODIFICATIONS NECESSARY DUE TO CONFLICTS, OMISSIONS, OR CHANGED CONDITIONS WILL BE ENTIRELY THE DEVELOPER'S RESPONSIBILITY TO RECTIFY.
6. CONTRACTOR SHALL SCHEDULE A PRE-CONSTRUCTION MEETING WITH EL PASO COUNTY PLANNING AND COMMUNITY DEVELOPMENT (PCD) -INSPECTIONS, PRIOR TO STARTING CONSTRUCTION.
7. IT IS THE CONTRACTOR'S RESPONSIBILITY TO UNDERSTAND THE REQUIREMENTS OF ALL JURISDICTIONAL AGENCIES AND TO OBTAIN ALL REQUIRED PERMITS, INCLUDING BUT NOT LIMITED TO EL PASO COUNTY EROSION AND STORMWATER QUALITY CONTROL PERMIT (ESQCP), REGIONAL BUILDING FLOODPLAIN DEVELOPMENT PERMIT, U.S. ARMY CORPS OF ENGINEERS-ISSUED 401 AND/OR 404 PERMITS, AND COUNTY AND STATE FUGITIVE DUST PERMITS.
8. CONTRACTOR SHALL NOT DEVIATE FROM THE PLANS WITHOUT FIRST OBTAINING WRITTEN APPROVAL FROM THE DESIGN ENGINEER AND PCD. CONTRACTOR SHALL NOTIFY THE DESIGN ENGINEER IMMEDIATELY UPON DISCOVERY OF ANY ERRORS OR INCONSISTENCIES.
9. ALL STORM DRAIN PIPE SHALL BE CLASS III RCP UNLESS OTHERWISE NOTED AND APPROVED BY PCD.
10. CONTRACTOR SHALL COORDINATE GEOTECHNICAL TESTING PER ECM STANDARDS. PAVEMENT DESIGN SHALL BE APPROVED BY EL PASO COUNTY PCD PRIOR TO PLACEMENT OF CURB AND GUTTER AND PAVEMENT.
11. ALL CONSTRUCTION TRAFFIC MUST ENTER/EXIT THE SITE AT APPROVED CONSTRUCTION ACCESS POINTS.
12. SIGHT VISIBILITY TRIANGLES AS IDENTIFIED IN THE PLANS SHALL BE PROVIDED AT ALL INTERSECTIONS. OBSTRUCTIONS GREATER THAN 18 INCHES ABOVE FLOWLINE ARE NOT ALLOWED WITHIN SIGHT TRIANGLES.
13. SIGNING AND STRIPING SHALL COMPLY WITH EL PASO COUNTY DOT AND MUTCD CRITERIA. [IF APPLICABLE, ADDITIONAL SIGNING AND STRIPING NOTES WILL BE PROVIDED.]
14. CONTRACTOR SHALL OBTAIN ANY PERMITS REQUIRED BY EL PASO COUNTY DOT, INCLUDING WORK WITHIN THE RIGHT-OF-WAY AND SPECIAL TRANSPORT PERMITS.
15. THE LIMITS OF CONSTRUCTION SHALL REMAIN WITHIN THE PROPERTY LINE UNLESS OTHERWISE NOTED. THE OWNER/DEVELOPER SHALL OBTAIN WRITTEN PERMISSION AND EASEMENTS, WHERE REQUIRED, FROM ADJOINING PROPERTY OWNER(S) PRIOR TO ANY OFF-SITE DISTURBANCE, GRADING, OR CONSTRUCTION.

STANDARD NOTES FOR EL PASO COUNTY SIGNAGE & STRIPING

1. ALL SIGNS AND PAVEMENT MARKINGS SHALL BE IN COMPLIANCE WITH THE CURRENT MANUAL ON UNIFORM TRAFFIC CONTROL DEVICES (MUTCD).
2. REMOVAL OF EXISTING PAVEMENT MARKINGS SHALL BE ACCOMPLISHED BY A METHOD THAT DOES NOT MATERIALLY DAMAGE THE PAVEMENT. THE PAVEMENT MARKINGS SHALL BE REMOVED TO THE EXTENT THAT THEY WILL NOT BE VISIBLE UNDER DAY OR NIGHT CONDITIONS. AT NO TIME WILL IT BE ACCEPTABLE TO PAINT OVER EXISTING PAVEMENT MARKINGS.
3. ANY DEVIATION FROM THE STRIPING AND SIGNING PLAN SHALL BE APPROVED BY EL PASO COUNTY PLANNING AND COMMUNITY DEVELOPMENT.
4. ALL SIGNS SHOWN ON THE SIGNING AND STRIPING PLAN SHALL BE NEW SIGNS. EXISTING SIGNS MAY REMAIN OR BE REUSED IF THEY MEET CURRENT EL PASO COUNTY AND MUTCD STANDARDS.
5. STREET NAME AND REGULATORY STOP SIGNS SHALL BE ON THE SAME POST AT INTERSECTIONS.
6. ALL REMOVED SIGNS SHALL BE DISPOSED OF IN A PROPER MANNER BY THE CONTRACTOR.
7. ALL STREET NAME SIGNS SHALL HAVE "D"SERIES LETTERS, WITH LOCAL ROADWAY SIGNS BEING 4"UPPER-LOWER CASE LETTERING ON 8"BLANK AND NON-LOCAL ROADWAY SIGNS BEING 6"LETTERING, UPPER-LOWER CASE ON 12"BLANK, WITH A WHITE BORDER THAT IS NOT RECESSED. MULTI-LANE ROADWAYS WITH SPEED LIMITS OF 40 MPH OR HIGHER SHALL HAVE 8"UPPER-LOWER CASE LETTERING ON 18"BLANK WITH A WHITE BORDER THAT IS NOT RECESSED. THE WIDTH OF THE NON-RECESSED WHITE BORDERS SHALL MATCH PAGE 255 OF THE 2012 MUTCD "STANDARD HIGHWAY SIGNS"
8. ALL TRAFFIC SIGNS SHALL HAVE A MINIMUM HIGH INTENSITY PRISMATIC GRADE SHEETING.
9. ALL LOCAL RESIDENTIAL STREET SIGNS SHALL BE MOUNTED ON A 1.75"X 1.75"SQUARE TUBE SIGN POST AND STUB POST BASE. FOR OTHER APPLICATIONS, REFER TO THE CDOT STANDARD S-614-8 REGARDING USE OF THE P2 TUBULAR STEEL POST SLIPBASE DESIGN.
10. ALL SIGNS SHALL BE SINGLE SHEET ALUMINUM WITH 0.100"MINIMUM THICKNESS.
11. ALL LIMIT LINES/STOP LINES, CROSSWALK LINES, PAVEMENT LEGENDS, AND ARROWS SHALL BE A MINIMUM 125 MIL THICKNESS PREFORMED THERMOPLASTIC PAVEMENT MARKINGS WITH TAPERED LEADING EDGES PER CDOT STANDARD S-627-1. WORD AND SYMBOL MARKINGS SHALL BE THE NARROW TYPE. STOP BARS SHALL BE 24"IN WIDTH. CROSSWALKS LINES SHALL BE 12"WIDE AND 8'LONG PER CDOT S-627-1.
12. ALL LONGITUDINAL LINES SHALL BE A MINIMUM 15MIL THICKNESS EPOXY PAINT. ALL NON-LOCAL RESIDENTIAL ROADWAYS SHALL INCLUDE BOTH RIGHT AND LEFT EDGE LINE STRIPING AND ANY ADDITIONAL STRIPING AS REQUIRED BY CDOT S-627-1.
13. THE CONTRACTOR SHALL NOTIFY EL PASO COUNTY PLANNING AND COMMUNITY DEVELOPMENT (719) 520-6819 PRIOR TO AND UPON COMPLETION OF SIGNING AND STRIPING.
14. THE CONTRACTOR SHALL OBTAIN A WORK IN THE RIGHT OF WAY PERMIT FROM THE EL PASO COUNTY DEPARTMENT OF PUBLIC WORKS (DPW) PRIOR TO ANY SIGNAGE OR STRIPING WORK WITHIN AN EXISTING EL PASO COUNTY ROADWAY.

Stabilized Staging Area (SSA) SM-6

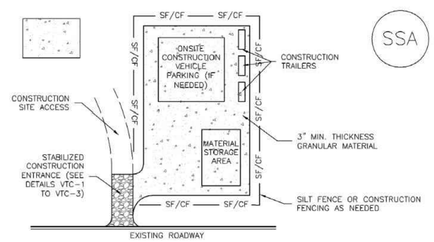

SSA-1. STABILIZED STAGING AREA

STABILIZED STAGING AREA INSTALLATION NOTES

1. SEE PLAN VIEW FOR
   -LOCATION OF STAGING AREA(S).
   -CONTRACTOR MAY ADJUST LOCATION AND SIZE OF STAGING AREA WITH APPROVAL FROM THE LOCAL JURISDICTION.

2. STABILIZED STAGING AREA SHOULD BE APPROPRIATE FOR THE NEEDS OF THE SITE. OVERSIZING RESULTS IN A LARGER AREA TO STABILIZE FOLLOWING CONSTRUCTION.

3. STAGING AREA SHALL BE STABILIZED PRIOR TO OTHER OPERATIONS ON THE SITE.

4. THE STABILIZED STAGING AREA SHALL CONSIST OF A MINIMUM 3" THICK GRANULAR MATERIAL.

5. UNLESS OTHERWISE SPECIFIED BY LOCAL JURISDICTION, ROCK SHALL CONSIST OF DOT SECT. #703, AASHTO #3 COARSE AGGREGATE OR 6" (MINUS) ROCK.

6. ADDITIONAL PERIMETER BMPs MAY BE REQUIRED INCLUDING BUT NOT LIMITED TO SILT FENCE AND CONSTRUCTION FENCING.

STABILIZED STAGING AREA MAINTENANCE NOTES

1. INSPECT BMPs EACH WORKDAY, AND MAINTAIN THEM IN EFFECTIVE OPERATING CONDITION. MAINTENANCE OF BMPs SHOULD BE PROACTIVE, NOT REACTIVE. INSPECT BMPs AS SOON AS POSSIBLE (AND ALWAYS WITHIN 24 HOURS) FOLLOWING A STORM THAT CAUSES SURFACE EROSION, AND PERFORM NECESSARY MAINTENANCE.

2. FREQUENT OBSERVATIONS AND MAINTENANCE ARE NECESSARY TO MAINTAIN BMPs IN EFFECTIVE OPERATING CONDITION. INSPECTIONS AND CORRECTIVE MEASURES SHOULD BE DOCUMENTED THOROUGHLY.

3. WHERE BMPs HAVE FAILED, REPAIR OR REPLACEMENT SHOULD BE INITIATED UPON DISCOVERY OF THE FAILURE.

4. ROCK SHALL BE REAPPLIED OR REGRADED AS NECESSARY IF RUTTING OCCURS OR UNDERLYING SUBGRADE BECOMES EXPOSED.

Concrete Washout Area (CWA) MM-1

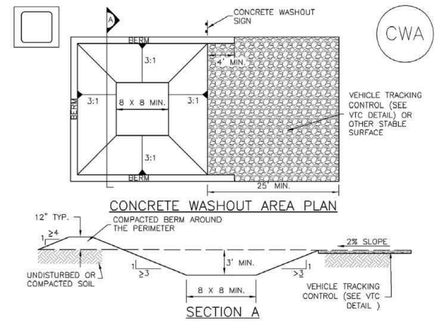

CWA-1. CONCRETE WASHOUT AREA

CWA INSTALLATION NOTES

1. SEE PLAN VIEW FOR:
   -CWA INSTALLATION LOCATION.

2. DO NOT LOCATE AN UNLINED CWA WITHIN 400' OF ANY NATURAL DRAINAGE PATHWAY OR WATERBODY. DO NOT LOCATE WITHIN 1,000' OF ANY WELLS OR DRINKING WATER SOURCES. IF SITE CONSTRAINTS MAKE THIS INFEASIBLE, OR IF HIGHLY PERMEABLE SOILS EXIST ON SITE, THE CWA MUST BE INSTALLED WITH AN IMPERMEABLE LINER (16 MIL MIN. THICKNESS) OR SURFACE STORAGE ALTERNATIVES USING PREFABRICATED CONCRETE WASHOUT DEVICES OR A LINED ABOVE GROUND STORAGE ARE SHOULD BE USED.

3. THE CWA SHALL BE INSTALLED PRIOR TO CONCRETE PLACEMENT ON SITE.

4. CWA SHALL INCLUDE A FLAT SUBSURFACE PIT THAT IS AT LEAST 8' BY 8' SLOPES LEADING OUT OF THE SUBSURFACE PIT SHALL BE 3:1 OR FLATTER. THE PIT SHALL BE AT LEAST 3' DEEP.

5. BERM SURROUNDING SIDES AND BACK OF THE CWA SHALL HAVE MINIMUM HEIGHT OF 1'.

6. VEHICLE TRACKING PAD SHALL BE SLOPED 2% TOWARDS THE CWA.

7. SIGNS SHALL BE PLACED AT THE CONSTRUCTION ENTRANCE, AT THE CWA, AND ELSEWHERE AS NECESSARY TO CLEARLY INDICATE THE LOCATION OF THE CWA TO OPERATORS OF CONCRETE TRUCKS AND PUMP RIGS.

8. USE EXCAVATED MATERIAL FOR PERIMETER BERM CONSTRUCTION.

MM-1 Concrete Washout Area (CWA)

CWA MAINTENANCE NOTES

1. INSPECT BMPs EACH WORKDAY, AND MAINTAIN THEM IN EFFECTIVE OPERATING CONDITION. MAINTENANCE OF BMPs SHOULD BE PROACTIVE, NOT REACTIVE. INSPECT BMPs AS SOON AS POSSIBLE (AND ALWAYS WITHIN 24 HOURS) FOLLOWING A STORM THAT CAUSES SURFACE EROSION, AND PERFORM NECESSARY MAINTENANCE.

2. FREQUENT OBSERVATIONS AND MAINTENANCE ARE NECESSARY TO MAINTAIN BMPs IN EFFECTIVE OPERATING CONDITION. INSPECTIONS AND CORRECTIVE MEASURES SHOULD BE DOCUMENTED THOROUGHLY.

3. WHERE BMPs HAVE FAILED, REPAIR OR REPLACEMENT SHOULD BE INITIATED UPON DISCOVERY OF THE FAILURE.

4. THE CWA SHALL BE REPAIRED, CLEANED, OR ENLARGED AS NECESSARY TO MAINTAIN CAPACITY FOR CONCRETE WASTE. CONCRETE MATERIALS, ACCUMULATED IN PIT, SHALL BE REMOVED ONCE THE MATERIALS HAVE REACHED A DEPTH OF 2'.

5. CONCRETE WASHOUT WATER, WASTED PIECES OF CONCRETE AND ALL OTHER DEBRIS IN THE SUBSURFACE PIT SHALL BE TRANSPORTED FROM THE JOB SITE IN A WATER-TIGHT CONTAINER AND DISPOSED OF PROPERLY.

6. THE CWA SHALL REMAIN IN PLACE UNTIL ALL CONCRETE FOR THE PROJECT IS PLACED.

7. WHEN THE CWA IS REMOVED, COVER THE DISTURBED AREA WITH TOP SOIL, SEED AND MULCH OR OTHERWISE STABILIZED IN A MANNER APPROVED BY THE LOCAL JURISDICTION.

(DETAIL ADAPTED FROM DOUGLAS COUNTY, COLORADO AND THE CITY OF PARKER, COLORADO, NOT AVAILABLE IN AUTOCAD).

NOTE: MANY JURISDICTIONS HAVE BMP DETAILS THAT VARY FROM UDFCD STANDARD DETAILS. CONSULT WITH LOCAL JURISDICTIONS AS TO WHICH DETAIL SHOULD BE USED WHEN DIFFERENCES ARE NOTED.

EPC 7/12/2021

N:\1051.6e\Drawings\1051.6e - Site Development Plan - EOP - DET.dwg, 7/01/2021 - 2:31 PM, jgj

CONSULTING ENGINEERS
JVA, Inc. 1512 Larimer Street, Suite 710
Denver, CO 80202 303.444.1951
www.jvajva.com
Boulder • Fort Collins • Winter Park
Glenwood Springs • Denver

NO.	DATE	DES'D	DWN	REVISION DESCRIPTION

COLORADO LICENSED PROFESSIONAL ENGINEER KENNETH JAMES JOHNSON 41654 7/1/2021

DESIGNED BY:	RAH/MHT
DRAWN BY:	JGJ
CHECKED BY:	JJM
JOB #:	1051.6e
DATE:	JULY 2021

WOODMOOR WSD NO.1
LAKE PUMP STATION NO. 2 AND PIPELINE
EL PASO COUNTY, COLORADO

EROSION CONTROL DETAILS AND COUNTY NOTES

SHEET NO.
CE1.4

Vehicle Tracking Control (VTC) SM-4

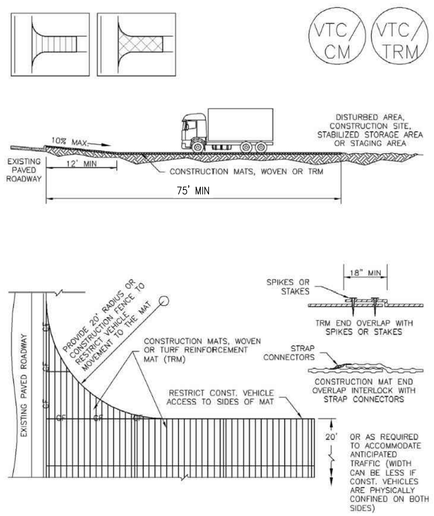

VTC–3. VEHICLE TRACKING CONTROL W/ CONSTRUCTION MAT OR TURF REINFORCEMENT MAT (TRM)

SC-2 Sediment Control Log (SCL)

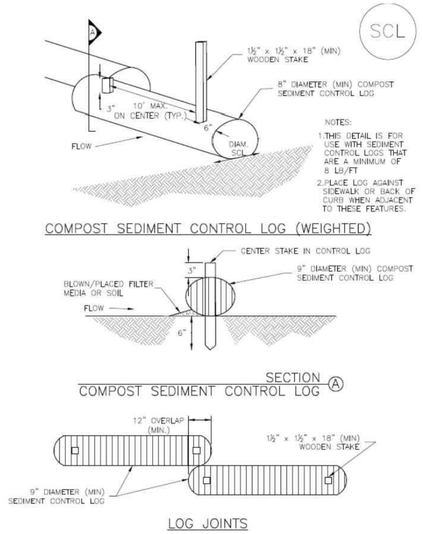

COMPOST SEDIMENT CONTROL LOG (WEIGHTED)

SECTION (A)
COMPOST SEDIMENT CONTROL LOG

LOG JOINTS

SCL–2. COMPOST SEDIMENT CONTROL LOG (WEIGHTED)

SC-5 Rock Sock (RS)

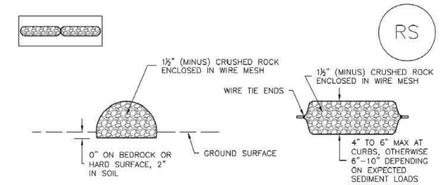

ROCK SOCK SECTION ROCK SOCK PLAN

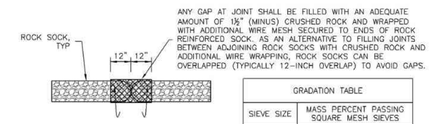

ROCK SOCK JOINTING

GRADATION TABLE	
SIEVE SIZE	MASS PERCENT PASSING SQUARE MESH SIEVES
	NO. 4
2"	100
1½"	90 – 100
1"	20 – 55
¾"	0 – 15
⅜"	0 – 5
MATCHES SPECIFICATIONS FOR NO. 4 COARSE AGGREGATE FOR CONCRETE PER AASHTO M43. ALL ROCK SHALL BE FRACTURED FACE, ALL SIDES.	

ROCK SOCK INSTALLATION NOTES

1. SEE PLAN VIEW FOR:
   –LOCATION(S) OF ROCK SOCKS.

2. CRUSHED ROCK SHALL BE 1½" (MINUS) IN SIZE WITH A FRACTURED FACE (ALL SIDES) AND SHALL COMPLY WITH GRADATION SHOWN ON THIS SHEET (1½" MINUS).

3. WIRE MESH SHALL BE FABRICATED OF 10 GAGE POULTRY MESH, OR EQUIVALENT, WITH A MAXIMUM OPENING OF ½", RECOMMENDED MINIMUM ROLL WIDTH OF 48"

4. WIRE MESH SHALL BE SECURED USING "HOG RINGS" OR WIRE TIES AT 6" CENTERS ALONG ALL JOINTS AND AT 2" CENTERS ON ENDS OF SOCKS.

5. SOME MUNICIPALITIES MAY ALLOW THE USE OF FILTER FABRIC AS AN ALTERNATIVE TO WIRE MESH FOR THE ROCK ENCLOSURE.

RS–1. ROCK SOCK PERIMETER CONTROL

SM-4 Vehicle Tracking Control (VTC)

STABILIZED CONSTRUCTION ENTRANCE/EXIT INSTALLATION NOTES

1. SEE PLAN VIEW FOR
   –LOCATION OF CONSTRUCTION ENTRANCE(S)/EXIT(S).
   –TYPE OF CONSTRUCTION ENTRANCE(S)/EXITS(S) (WITH/WITHOUT WHEEL WASH, CONSTRUCTION MAT OR TRM).

2. CONSTRUCTION MAT OR TRM STABILIZED CONSTRUCTION ENTRANCES ARE ONLY TO BE USED ON SHORT DURATION PROJECTS (TYPICALLY RANGING FROM A WEEK TO A MONTH) WHERE THERE WILL BE LIMITED VEHICULAR ACCESS.

3. A STABILIZED CONSTRUCTION ENTRANCE/EXIT SHALL BE LOCATED AT ALL ACCESS POINTS WHERE VEHICLES ACCESS THE CONSTRUCTION SITE FROM PAVED RIGHT–OF–WAYS.

4. STABILIZED CONSTRUCTION ENTRANCE/EXIT SHALL BE INSTALLED PRIOR TO ANY LAND DISTURBING ACTIVITIES.

5. A NON–WOVEN GEOTEXTILE FABRIC SHALL BE PLACED UNDER THE STABILIZED CONSTRUCTION ENTRANCE/EXIT PRIOR TO THE PLACEMENT OF ROCK.

6. UNLESS OTHERWISE SPECIFIED BY LOCAL JURISDICTION, ROCK SHALL CONSIST OF DOT SECT. #703, AASHTO #3 COARSE AGGREGATE OR 6" (MINUS) ROCK.

STABILIZED CONSTRUCTION ENTRANCE/EXIT MAINTENANCE NOTES

1. INSPECT BMPs EACH WORKDAY, AND MAINTAIN THEM IN EFFECTIVE OPERATING CONDITION. MAINTENANCE OF BMPs SHOULD BE PROACTIVE, NOT REACTIVE. INSPECT BMPs AS SOON AS POSSIBLE (AND ALWAYS WITHIN 24 HOURS) FOLLOWING A STORM THAT CAUSES SURFACE EROSION, AND PERFORM NECESSARY MAINTENANCE.

2. FREQUENT OBSERVATIONS AND MAINTENANCE ARE NECESSARY TO MAINTAIN BMPs IN EFFECTIVE OPERATING CONDITION. INSPECTIONS AND CORRECTIVE MEASURES SHOULD BE DOCUMENTED THOROUGHLY.

3. WHERE BMPs HAVE FAILED, REPAIR OR REPLACEMENT SHOULD BE INITIATED UPON DISCOVERY OF THE FAILURE.

4. ROCK SHALL BE REAPPLIED OR REGRADED AS NECESSARY TO THE STABILIZED ENTRANCE/EXIT TO MAINTAIN A CONSISTENT DEPTH.

5. SEDIMENT TRACKED ONTO PAVED ROADS IS TO BE REMOVED THROUGHOUT THE DAY AND AT THE END OF THE DAY BY SHOVELING OR SWEEPING. SEDIMENT MAY NOT BE WASHED DOWN STORM SEWER DRAINS.

NOTE: MANY JURISDICTIONS HAVE BMP DETAILS THAT VARY FROM UDFCD STANDARD DETAILS. CONSULT WITH LOCAL JURISDICTIONS AS TO WHICH DETAIL SHOULD BE USED WHEN DIFFERENCES ARE NOTED.

(DETAILS ADAPTED FROM CITY OF BROOMFIELD, COLORADO, NOT AVAILABLE IN AUTOCAD)

SC-2 Sediment Control Log (SCL)

SEDIMENT CONTROL LOG INSTALLATION NOTES

1. SEE PLAN VIEW FOR LOCATION AND LENGTH OF SEDIMENT CONTROL LOGS.

2. SEDIMENT CONTROL LOGS THAT ACT AS A PERIMETER CONTROL SHALL BE INSTALLED PRIOR TO ANY UPGRADIENT LAND–DISTURBING ACTIVITIES.

3. SEDIMENT CONTROL LOGS SHALL CONSIST OF STRAW, COMPOST, EXCELSIOR OR COCONUT FIBER, AND SHALL BE FREE OF ANY NOXIOUS WEED SEEDS OR DEFECTS INCLUDING RIPS, HOLES AND OBVIOUS WEAR.

4. SEDIMENT CONTROL LOGS MAY BE USED AS SMALL CHECK DAMS IN DITCHES AND SWALES. HOWEVER, THEY SHOULD NOT BE USED IN PERENNIAL STREAMS.

5. IT IS RECOMMENDED THAT SEDIMENT CONTROL LOGS BE TRENCHED INTO THE GROUND TO A DEPTH OF APPROXIMATELY ⅓ OF THE DIAMETER OF THE LOG. IF TRENCHING TO THIS DEPTH IS NOT FEASIBLE AND/OR DESIRABLE (SHORT TERM INSTALLATION WITH DESIRE NOT TO DAMAGE LANDSCAPE) A LESSER TRENCHING DEPTH MAY BE ACCEPTABLE WITH MORE ROBUST STAKING. COMPOST LOGS THAT ARE 8 LB/FT DO NOT NEED TO BE TRENCHED.

6. THE UPHILL SIDE OF THE SEDIMENT CONTROL LOG SHALL BE BACKFILLED WITH SOIL OR FILTER MATERIAL THAT IS FREE OF ROCKS AND DEBRIS. THE SOIL SHALL BE TIGHTLY COMPACTED INTO THE SHAPE OF A RIGHT TRIANGLE USING A SHOVEL OR WEIGHTED LAWN ROLLER OR BLOWN IN PLACE.

7. FOLLOW MANUFACTURERS' GUIDANCE FOR STAKING. IF MANUFACTURERS' INSTRUCTIONS DO NOT SPECIFY SPACING, STAKES SHALL BE PLACED ON 4' CENTERS AND EMBEDDED A MINIMUM OF 6" INTO THE GROUND. 3" OF THE STAKE SHALL PROTRUDE FROM THE TOP OF THE LOG. STAKES THAT ARE BROKEN PRIOR TO INSTALLATION SHALL BE REPLACED. COMPOST LOGS SHOULD BE STAKED 10' ON CENTER.

SEDIMENT CONTROL LOG MAINTENANCE NOTES

1. INSPECT BMPs EACH WORKDAY, AND MAINTAIN THEM IN EFFECTIVE OPERATING CONDITION. MAINTENANCE OF BMPs SHOULD BE PROACTIVE, NOT REACTIVE. INSPECT BMPs AS SOON AS POSSIBLE (AND ALWAYS WITHIN 24 HOURS) FOLLOWING A STORM THAT CAUSES SURFACE EROSION, AND PERFORM NECESSARY MAINTENANCE.

2. FREQUENT OBSERVATIONS AND MAINTENANCE ARE NECESSARY TO MAINTAIN BMPs IN EFFECTIVE OPERATING CONDITION. INSPECTIONS AND CORRECTIVE MEASURES SHOULD BE DOCUMENTED THOROUGHLY.

3. WHERE BMPs HAVE FAILED, REPAIR OR REPLACEMENT SHOULD BE INITIATED UPON DISCOVERY OF THE FAILURE.

4. SEDIMENT ACCUMULATED UPSTREAM OF SEDIMENT CONTROL LOG SHALL BE REMOVED AS NEEDED TO MAINTAIN FUNCTIONALITY OF THE BMP, TYPICALLY WHEN DEPTH OF ACCUMULATED SEDIMENTS IS APPROXIMATELY ½ OF THE HEIGHT OF THE SEDIMENT CONTROL LOG.

5. SEDIMENT CONTROL LOG SHALL BE REMOVED AT THE END OF CONSTRUCTION.COMPOST FROM COMPOST LOGS MAY BE LEFT IN PLACE AS LONG AS BAGS ARE REMOVED AND THE AREA SEEDED. IF DISTURBED AREAS EXIST AFTER REMOVAL, THEY SHALL BE COVERED WITH TOP SOIL, SEEDED AND MULCHED OR OTHERWISE STABILIZED IN A MANNER APPROVED BY THE LOCAL JURISDICTION.

(DETAILS ADAPTED FROM TOWN OF PARKER, COLORADO, JEFFERSON COUNTY, COLORADO, DOUGLAS COUNTY, COLORADO, AND CITY OF AURORA, COLORADO, NOT AVAILABLE IN AUTOCAD)

NOTE: MANY JURISDICTIONS HAVE BMP DETAILS THAT VARY FROM UDFCD STANDARD DETAILS. CONSULT WITH LOCAL JURISDICTIONS AS TO WHICH DETAIL SHOULD BE USED WHEN DIFFERENCES ARE NOTED.

Rock Sock (RS) SC-5

ROCK SOCK MAINTENANCE NOTES

1. INSPECT BMPs EACH WORKDAY, AND MAINTAIN THEM IN EFFECTIVE OPERATING CONDITION. MAINTENANCE OF BMPs SHOULD BE PROACTIVE, NOT REACTIVE. INSPECT BMPs AS SOON AS POSSIBLE (AND ALWAYS WITHIN 24 HOURS) FOLLOWING A STORM THAT CAUSES SURFACE EROSION, AND PERFORM NECESSARY MAINTENANCE.

2. FREQUENT OBSERVATIONS AND MAINTENANCE ARE NECESSARY TO MAINTAIN BMPs IN EFFECTIVE OPERATING CONDITION. INSPECTIONS AND CORRECTIVE MEASURES SHOULD BE DOCUMENTED THOROUGHLY.

3. WHERE BMPs HAVE FAILED, REPAIR OR REPLACEMENT SHOULD BE INITIATED UPON DISCOVERY OF THE FAILURE.

4. ROCK SOCKS SHALL BE REPLACED IF THEY BECOME HEAVILY SOILED, OR DAMAGED BEYOND REPAIR.

5. SEDIMENT ACCUMULATED UPSTREAM OF ROCK SOCKS SHALL BE REMOVED AS NEEDED TO MAINTAIN FUNCTIONALITY OF THE BMP, TYPICALLY WHEN DEPTH OF ACCUMULATED SEDIMENTS IS APPROXIMATELY ½ OF THE HEIGHT OF THE ROCK SOCK.

6. ROCK SOCKS ARE TO REMAIN IN PLACE UNTIL THE UPSTREAM DISTURBED AREA IS STABILIZED AND APPROVED BY THE LOCAL JURISDICTION.

7. WHEN ROCK SOCKS ARE REMOVED, ALL DISTURBED AREAS SHALL BE COVERED WITH TOPSOIL, SEEDED AND MULCHED OR OTHERWISE STABILIZED AS APPROVED BY LOCAL JURISDICTION.

(DETAIL ADAPTED FROM TOWN OF PARKER, COLORADO AND CITY OF AURORA, COLORADO, NOT AVAILABLE IN AUTOCAD)

NOTE: MANY JURISDICTIONS HAVE BMP DETAILS THAT VARY FROM UDFCD STANDARD DETAILS. CONSULT WITH LOCAL JURISDICTIONS AS TO WHICH DETAIL SHOULD BE USED WHEN DIFFERENCES ARE NOTED.

NOTE: THE DETAILS INCLUDED WITH THIS FACT SHEET SHOW COMMONLY USED, CONVENTIONAL METHODS OF ROCK SOCK INSTALLATION IN THE DENVER METROPOLITAN AREA. THERE ARE MANY OTHER SIMILAR PROPRIETARY PRODUCTS ON THE MARKET. UDFCD NEITHER NOORSES NOR DISCOURAGES USE OF PROPRIETARY PROTECTION PRODUCTS; HOWEVER, IN THE EVENT PROPRIETARY METHODS ARE USED, THE APPROPRIATE DETAIL FROM THE MANUFACTURER MUST BE INCLUDED IN THE SWMP AND THE BMP MUST BE INSTALLED AND MAINTAINED AS SHOWN IN THE MANUFACTURER'S DETAILS.

EPC 7/12/2021

JVA, Inc. 1512 Larimer Street, Suite 710
Denver, CO 80202 303.444.1951
www.jvajva.com
Boulder • Fort Collins • Winter Park
Glenwood Springs • Denver

NO.	DATE	DES'D	DWN	REVISION DESCRIPTION

COLORADO LICENSED PROFESSIONAL ENGINEER KENNETH JAMES MITCHELL 41654 7/1/2021

DESIGNED BY:	RAH/MHT
DRAWN BY:	JGJ
CHECKED BY:	JJM
JOB #:	1051.6e
DATE:	JULY 2021

WOODMOOR WSD NO.1
LAKE PUMP STATION NO. 2 AND PIPELINE
EL PASO COUNTY, COLORADO

EROSION CONTROL DETAILS

SHEET NO.
CE1.5

N:\1051.6e\Drawings\1051.6e – Site Development Plan – ECP – DET.dwg, 7/01/2021 – 2:31 PM, jgj

soil amendments and rototill them into the soil to a depth of 6 inches or more.

Topsoil should be salvaged during grading operations for use and spread on areas to be revegetated later. Topsoil should be viewed as an important resource to be utilized for vegetation establishment, due to its water-holding capacity, structure, texture, organic matter content, biological activity, and nutrient content. The rooting depth of most native grasses in the semi-arid Denver metropolitan area is 6 to 18 inches. At a minimum, the upper 6 inches of topsoil should be stripped, stockpiled, and ultimately respread across areas that will be revegetated.

Where topsoil is not available, subsoils should be amended to provide an appropriate plant-growth medium. Organic matter, such as well digested compost, can be added to improve soil characteristics conducive to plant growth. Other treatments can be used to adjust soil pH conditions when needed. Soil testing, which is typically inexpensive, should be completed to determine and optimize the types and amounts of amendments that are required.

If the disturbed ground surface is compacted, rip or rototill the surface prior to placing topsoil. If adding compost to the existing soil surface, rototilling is necessary. Surface roughening will assist in placement of a stable topsoil layer on steeper slopes, and allow infiltration and root penetration to greater depth.

Prior to seeding, the soil surface should be rough and the seedbed should be firm, but neither too loose nor compacted. The upper layer of soil should be in a condition suitable for seeding at the proper depth and conducive to plant growth. Seed-to-soil contact is the key to good germination.

Seed Mix for Temporary Vegetation

To provide temporary vegetative cover on disturbed areas which will not be paved, built upon, or fully landscaped or worked for an extended period (typically 30 days or more), plant an annual grass appropriate for the time of planting and mulch the planted areas. Annual grasses suitable for the Denver metropolitan area are listed in Table TS/PS-1. These are to be considered only as general recommendations when specific design guidance for a particular site is not available. Local governments typically specify seed mixes appropriate for their jurisdiction.

Seed Mix for Permanent Revegetation

To provide vegetative cover on disturbed areas that have reached final grade, a perennial grass mix should be established. Permanent seeding should be performed promptly (typically within 14 days) after reaching final grade. Each site will have different characteristics and a landscape professional or the local jurisdiction should be contacted to determine the most suitable seed mix for a specific site. In lieu of a specific recommendation, one of the perennial grass mixes appropriate for site conditions and growth season listed in Table TS/PS-2 can be used. The pure live seed (PLS) rates of application recommended in these tables are considered to be absolute minimum rates for seed applied using proper drill-seeding equipment.

If desired for wildlife habitat or landscape diversity, shrubs such as rubber rabbitbrush (*Chrysothamnus nauseosus*), fourwing saltbush (*Atriplex canescens*) and skunkbrush sumac (*Rhus trilobata*) could be added to the upland seedmixes at 0.25, 0.5 and 1 pound PLS/acre, respectively. In riparian zones, planting root stock of such species as American plum (*Prunus americana*), woods rose (*Rosa woodsii*), plains cottonwood (*Populus sargentii*), and willow (*Populus spp.*) may be considered. On non-topsoiled upland sites, a legume such as Ladak alfalfa at 1 pound PLS/acre can be included as a source of nitrogen for perennial grasses.

Seeding dates for the highest success probability of perennial species along the Front Range are generally in the spring from April through early May and in the fall after the first of September until the ground freezes. If the area is irrigated, seeding may occur in summer months, as well. See Table TS/PS-3 for appropriate seeding dates.

Table TS/PS-1. Minimum Drill Seeding Rates for Various Temporary Annual Grasses

Species[a] (Common name)	Growth Season[b]	Pounds of Pure Live Seed (PLS)/acre[c]	Planting Depth (inches)
1. Oats	Cool	35 - 50	1 - 2
2. Spring wheat	Cool	25 - 35	1 - 2
3. Spring barley	Cool	25 - 35	1 - 2
4. Annual ryegrass	Cool	10 - 15	½
5. Millet	Warm	3 - 15	½ - ¾
6. Sudangrass	Warm	5–10	½ - ¾
7. Sorghum	Warm	5–10	½ - ¾
8. Winter wheat	Cool	20–35	1 - 2
9. Winter barley	Cool	20–35	1 - 2
10. Winter rye	Cool	20–35	1 - 2
11. Triticale	Cool	25–40	1 - 2

[a] Successful seeding of annual grass resulting in adequate plant growth will usually produce enough dead-plant residue to provide protection from wind and water erosion for an additional year. This assumes that the cover is not disturbed or mowed closer than 8 inches.

Hydraulic seeding may be substituted for drilling only where slopes are steeper than 3:1 or where access limitations exist. When hydraulic seeding is used, hydraulic mulching should be applied as a separate operation, when practical, to prevent the seeds from being encapsulated in the mulch.

[b] See Table TS/PS-3 for seeding dates. Irrigation, if consistently applied, may extend the use of cool season species during the summer months.

[c] Seeding rates should be doubled if seed is broadcast, or increased by 50 percent if done using a Brillion Drill or by hydraulic seeding.

Table TS/PS-2. Minimum Drill Seeding Rates for Perennial Grasses

Common[a] Name	Botanical Name	Growth Season[b]	Growth Form	Seeds/ Pound	Pounds of PLS/acre
Alakali Soil Seed Mix					
Alkali sacaton	*Sporobolus airoides*	Cool	Bunch	1,750,000	0.25
Basin wildrye	*Elymus cinereus*	Cool	Bunch	165,000	2.5
Sodar streambank wheatgrass	*Agropyron riparium 'Sodar'*	Cool	Sod	170,000	2.5
Jose tall wheatgrass	*Agropyron elongatum 'Jose'*	Cool	Bunch	79,000	7.0
Arriba western wheatgrass	*Agropyron smithii 'Arriba'*	Cool	Sod	110,000	5.5
Total					**17.75**
Fertile Loamy Soil Seed Mix					
Ephriam crested wheatgrass	*Agropyron cristatum 'Ephriam'*	Cool	Sod	175,000	2.0
Dural hard fescue	*Festuca ovina 'duriuscula'*	Cool	Bunch	565,000	1.0
Lincoln smooth brome	*Bromus inermis leyss 'Lincoln'*	Cool	Sod	130,000	3.0
Sodar streambank wheatgrass	*Agropyron riparium 'Sodar'*	Cool	Sod	170,000	2.5
Arriba western wheatgrass	*Agropyron smithii 'Arriba'*	Cool	Sod	110,000	7.0
Total					**15.5**
High Water Table Soil Seed Mix					
Meadow foxtail	*Alopecurus pratensis*	Cool	Sod	900,000	0.5
Redtop	*Agrostis alba*	Warm	Open sod	5,000,000	0.25
Reed canarygrass	*Phalaris arundinacea*	Cool	Sod	68,000	0.5
Lincoln smooth brome	*Bromus inermis leyss 'Lincoln'*	Cool	Sod	130,000	3.0
Pathfinder switchgrass	*Panicum virgatum 'Pathfinder'*	Warm	Sod	389,000	1.0
Alkar tall wheatgrass	*Agropyron elongatum 'Alkar'*	Cool	Bunch	79,000	5.5
Total					**10.75**
Transition Turf Seed Mix[c]					
Ruebens Canadian bluegrass	*Poa compressa 'Ruebens'*	Cool	Sod	2,500,000	0.5
Dural hard fescue	*Festuca ovina 'duriuscula'*	Cool	Bunch	565,000	1.0
Citation perennial ryegrass	*Lolium perenne 'Citation'*	Cool	Sod	247,000	3.0
Lincoln smooth brome	*Bromus inermis leyss 'Lincoln'*	Cool	Sod	130,000	3.0
Total					**7.5**

Table TS/PS-2. Minimum Drill Seeding Rates for Perennial Grasses (cont.)

Common Name	Botanical Name	Growth Season[b]	Growth Form	Seeds/ Pound	Pounds of PLS/acre
Sandy Soil Seed Mix					
Blue grama	*Bouteloua gracilis*	Warm	Sod-forming bunchgrass	825,000	0.5
Camper little bluestem	*Schizachyrium scoparium 'Camper'*	Warm	Bunch	240,000	1.0
Prairie sandreed	*Calamovilfa longifolia*	Warm	Open sod	274,000	1.0
Sand dropseed	*Sporobolus cryptandrus*	Cool	Bunch	5,298,000	0.25
Vaughn sideoats grama	*Bouteloua curtipendula 'Vaughn'*	Warm	Sod	191,000	2.0
Arriba western wheatgrass	*Agropyron smithii 'Arriba'*	Cool	Sod	110,000	5.5
Total					**10.25**
Heavy Clay, Rocky Foothill Seed Mix					
Ephriam crested wheatgrass[d]	*Agropyron cristatum 'Ephriam'*	Cool	Sod	175,000	1.5
Oahe Intermediate wheatgrass	*Agropyron intermedium 'Oahe'*	Cool	Sod	115,000	5.5
Vaughn sideoats grama[e]	*Bouteloua curtipendula 'Vaughn'*	Warm	Sod	191,000	2.0
Lincoln smooth brome	*Bromus inermis leyss 'Lincoln'*	Cool	Sod	130,000	3.0
Arriba western wheatgrass	*Agropyron smithii 'Arriba'*	Cool	Sod	110,000	5.5
Total					**17.5**

[a] All of the above seeding mixes and rates are based on drill seeding followed by crimped straw mulch. These rates should be doubled if seed is broadcast and should be increased by 50 percent if the seeding is done using a Brillion Drill or is applied through hydraulic seeding. Hydraulic seeding may be substituted for drilling only where slopes are steeper than 3:1. If hydraulic seeding is used, hydraulic mulching should be done as a separate operation.

[b] See Table TS/PS-3 for seeding dates.

[c] If site is to be irrigated, the transition turf seed rates should be doubled.

[d] Crested wheatgrass should not be used on slopes steeper than 6H to 1V.

[e] Can substitute 0.5 lbs PLS of blue grama for the 2.0 lbs PLS of Vaughn sideoats grama.

Table TS/PS-3. Seeding Dates for Annual and Perennial Grasses

	Annual Grasses (Numbers in table reference species in Table TS/PS-1)		Perennial Grasses	
Seeding Dates	**Warm**	**Cool**	**Warm**	**Cool**
January 1–March 15			✓	✓
March 16–April 30	4	1,2,3	✓	✓
May 1–May 15	4		✓	
May 16–June 30	4,5,6,7			
July 1–July 15	5,6,7			
July 16–August 31				
September 1–September 30		8,9,10,11		
October 1–December 31			✓	✓

Mulch

Cover seeded areas with mulch or an appropriate rolled erosion control product to promote establishment of vegetation. Anchor mulch by crimping, netting or use of a non-toxic tackifier. See the Mulching BMP Fact Sheet for additional guidance.

Maintenance and Removal

Monitor and observe seeded areas to identify areas of poor growth or areas that fail to germinate. Reseed and mulch these areas, as needed.

An area that has been permanently seeded should have a good stand of vegetation within one growing season if irrigated and within three growing seasons without irrigation in Colorado. Reseed portions of the site that fail to germinate or remain bare after the first growing season.

Seeded areas may require irrigation, particularly during extended dry periods. Targeted weed control may also be necessary.

Protect seeded areas from construction equipment and vehicle access.

EPC 7/12/2021

JVA, Inc. 1512 Larimer Street, Suite 710
Denver, CO 80202 303.444.1951
www.jvajva.com
Boulder • Fort Collins • Winter Park
Glenwood Springs • Denver

NO.	DATE	DES'D	DWN	REVISION DESCRIPTION

COLORADO LICENSED PROFESSIONAL ENGINEER KENNETH JAMES MCDONALD 41654 7/1/2021

DESIGNED BY: RAH/MHT
DRAWN BY: JGJ
CHECKED BY: JJM
JOB #: 1051.6e
DATE: JULY 2021

WOODMOOR WSD NO.1
LAKE PUMP STATION NO. 2 AND PIPELINE
EL PASO COUNTY, COLORADO

EROSION CONTROL DETAILS

SHEET NO.
CE1.6

N:\1051.6e\Drawings\1051.6e - Site Development Plan - ECP - DET.dwg, 7/01/2021 - 2:31 PM, jgj

Description

Photograph RECP-1. Erosion control blanket protecting the slope from erosion and providing favorable conditions for revegetation.

Rolled Erosion Control Products (RECPs) include a variety of temporary or permanently installed manufactured products designed to control erosion and enhance vegetation establishment and survivability, particularly on slopes and in channels. For applications where natural vegetation alone will provide sufficient permanent erosion protection, temporary products such as netting, open weave textiles and a variety of erosion control blankets (ECBs) made of biodegradable natural materials (e.g., straw, coconut fiber) can be used. For applications where natural vegetation alone will not be sustainable under expected flow conditions, permanent rolled erosion control products such as turf reinforcement mats (TRMs) can be used. In particular, turf reinforcement mats are designed for discharges that exert velocities and sheer stresses that exceed the typical limits of mature natural vegetation.

Appropriate Uses

RECPs can be used to control erosion in conjunction with revegetation efforts, providing seedbed protection from wind and water erosion. These products are often used on disturbed areas on steep slopes, in areas with highly erosive soils, or as part of drainageway stabilization. In order to select the appropriate RECP for site conditions, it is important to have a general understanding of the general types of these products, their expected longevity, and general characteristics.

The Erosion Control Technology Council (ECTC 2005) characterizes rolled erosion control products according to these categories:

- **Mulch control netting**: A planar woven natural fiber or extruded geosynthetic mesh used as a temporary degradable rolled erosion control product to anchor loose fiber mulches.
- **Open weave textile**: A temporary degradable rolled erosion control product composed of processed natural or polymer yarns woven into a matrix, used to provide erosion control and facilitate vegetation establishment.
- **Erosion control blanket (ECB)**: A temporary degradable rolled erosion control product composed of processed natural or polymer fibers which are mechanically, structurally or chemically bound together to form a continuous matrix to provide erosion control and facilitate vegetation establishment. ECBs can be further differentiated into rapidly degrading single-net and double-net types or slowly degrading types.

Rolled Erosion Control Products	
Functions	
Erosion Control	Yes
Sediment Control	No
Site/Material Management	No

Table RECP-1. ECTC Standard Specification for Temporary Rolled Erosion Control Products
(Adapted from Erosion Control Technology Council 2005)

Product Description	Slope Applications*		Channel Applications*	Minimum Tensile Strength[1]	Expected Longevity
	Maximum Gradient	C Factor[2,5]	Max. Shear Stress[3,4,6]		
Mulch Control Nets	5:1 (H:V)	≤0.10 @ 5:1	0.25 lbs/ft^2 (12 Pa)	5 lbs/ft (0.073 kN/m)	Up to 12 months
Netless Rolled Erosion Control Blankets	4:1 (H:V)	≤0.10 @ 4:1	0.5 lbs/ft^2 (24 Pa)	5 lbs/ft (0.073 kN/m)	
Single-net Erosion Control Blankets & Open Weave Textiles	3:1 (H:V)	≤0.15 @ 3:1	1.5 lbs/ft^2 (72 Pa)	50 lbs/ft (0.73 kN/m)	
Double-net Erosion Control Blankets	2:1 (H:V)	≤0.20 @ 2:1	1.75 lbs/ft^2 (84 Pa)	75 lbs/ft (1.09 kN/m)	
Mulch Control Nets	5:1 (H:V)	≤0.10 @ 5:1	0.25 lbs/ft^2 (12 Pa)	25 lbs/ft (0.36 kN/m)	24 months
Erosion Control Blankets & Open Weave Textiles (slowly degrading)	1.5:1 (H:V)	≤0.25 @ 1.5:1	2.00 lbs/ft^2 (96 Pa)	100 lbs/ft (1.45 kN/m)	24 months
Erosion Control Blankets & Open Weave Textiles	1:1 (H:V)	≤0.25 @ 1:1	2.25 lbs/ft^2 (108 Pa)	125 lbs/ft (1.82 kN/m)	36 months

* C Factor and shear stress for mulch control nettings must be obtained with netting used in conjunction with pre-applied mulch material. (*See Section 5.3 of Chapter 7 Construction BMPs for more information on the C Factor.*)

[1] Minimum Average Roll Values, Machine direction using ECTC Mod. ASTM D 5035.

[2] C Factor calculated as ratio of soil loss from RECP protected slope (tested at specified or greater gradient, H:V) to ratio of soil loss from unprotected (control) plot in large-scale testing.

[3] Required minimum shear stress RECP (unvegetated) can sustain without physical damage or excess erosion (> 12.7 mm (0.5 in) soil loss) during a 30-minute flow event in large-scale testing.

[4] The permissible shear stress levels established for each performance category are based on historical experience with products characterized by Manning's roughness coefficients in the range of 0.01 - 0.05.

[5] Acceptable large-scale test methods may include ASTM D 6459, or other independent testing deemed acceptable by the engineer.

[6] Per the engineer's discretion. Recommended acceptable large-scale testing protocol may include ASTM D 6460, or other independent testing deemed acceptable by the engineer.

Staking patterns are also provided in the design details according to these factors:

- ECB type
- Slope or channel type

For other types of RECPs including TRMs, these design details are intended to serve as general guidelines for design and installation; however, engineers should adhere to manufacturer's installation recommendations.

Maintenance and Removal

Inspection of erosion control blankets and other RECPs includes:

- Check for general signs of erosion, including voids beneath the mat. If voids are apparent, fill the void with suitable soil and replace the erosion control blanket, following the appropriate staking pattern.
- Check for damaged or loose stakes and secure loose portions of the blanket.

Erosion control blankets and other RECPs that are biodegradable typically do not need to be removed after construction. If they must be removed, then an alternate soil stabilization method should be installed promptly following removal.

Turf reinforcement mats, although generally resistant to biodegradation, are typically left in place as a dense vegetated cover grows in through the mat matrix. The turf reinforcement mat provides long-term stability and helps the established vegetation resist erosive forces.

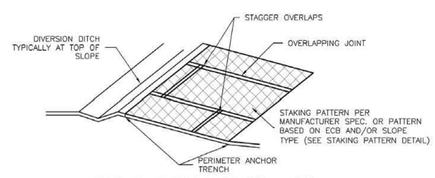

ECB–3. OUTSIDE OF DRAINAGEWAY

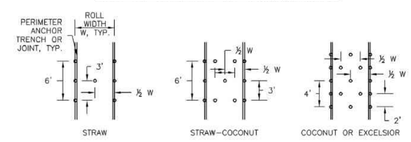

STAKING PATTERNS BY ECB TYPE

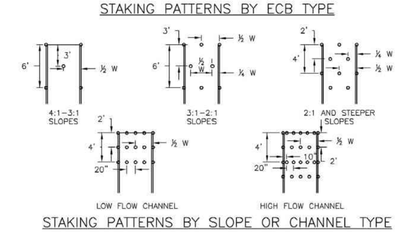

STAKING PATTERNS BY SLOPE OR CHANNEL TYPE

EROSION CONTROL BLANKET INSTALLATION NOTES

1. SEE PLAN VIEW FOR:
   –LOCATION OF ECB.
   –TYPE OF ECB (STRAW, STRAW–COCONUT, COCONUT, OR EXCELSIOR).
   –AREA, A, IN SQUARE YARDS OF EACH TYPE OF ECB.

2. 100% NATURAL AND BIODEGRADABLE MATERIALS ARE PREFERRED FOR RECPs, ALTHOUGH SOME JURISDICTIONS MAY ALLOW OTHER MATERIALS IN SOME APPLICATIONS.

3. IN AREAS WHERE ECBs ARE SHOWN ON THE PLANS, THE PERMITTEE SHALL PLACE TOPSOIL AND PERFORM FINAL GRADING, SURFACE PREPARATION, AND SEEDING AND MULCHING. SUBGRADE SHALL BE SMOOTH AND MOIST PRIOR TO ECB INSTALLATION AND THE ECB SHALL BE IN FULL CONTACT WITH SUBGRADE. NO GAPS OR VOIDS SHALL EXIST UNDER THE BLANKET.

4. PERIMETER ANCHOR TRENCH SHALL BE USED ALONG THE OUTSIDE PERIMETER OF ALL BLANKET AREAS.

5. JOINT ANCHOR TRENCH SHALL BE USED TO JOIN ROLLS OF ECBs TOGETHER (LONGITUDINALLY AND TRANSVERSELY) FOR ALL ECBs EXCEPT STRAW WHICH MAY USE AN OVERLAPPING JOINT.

6. INTERMEDIATE ANCHOR TRENCH SHALL BE USED AT SPACING OF ONE–HALF ROLL LENGTH FOR COCONUT AND EXCELSIOR ECBs.

7. OVERLAPPING JOINT DETAIL SHALL BE USED TO JOIN ROLLS OF ECBs TOGETHER FOR ECBs ON SLOPES.

8. MATERIAL SPECIFICATIONS OF ECBs SHALL CONFORM TO TABLE ECB–1.

9. ANY AREAS OF SEEDING AND MULCHING DISTURBED IN THE PROCESS OF INSTALLING ECBS SHALL BE RESEEDED AND MULCHED.

10. DETAILS ON DESIGN PLANS FOR MAJOR DRAINAGEWAY STABILIZATION WILL GOVERN IF DIFFERENT FROM THOSE SHOWN HERE.

TABLE ECB–1. ECB MATERIAL SPECIFICATIONS

TYPE	COCONUT CONTENT	STRAW CONTENT	EXCELSIOR CONTENT	RECOMMENDED NETTING**
STRAW*	–	100%	–	DOUBLE/ NATURAL
STRAW–COCONUT	30% MIN	70% MAX	–	DOUBLE/ NATURAL
COCONUT	100%	–	–	DOUBLE/ NATURAL
EXCELSIOR	–	–	100%	DOUBLE/ NATURAL

*STRAW ECBs MAY ONLY BE USED OUTSIDE OF STREAMS AND DRAINAGE CHANNEL.
**ALTERNATE NETTING MAY BE ACCEPTABLE IN SOME JURISDICTIONS

EROSION CONTROL BLANKET MAINTENANCE NOTES

1. INSPECT BMPs EACH WORKDAY, AND MAINTAIN THEM IN EFFECTIVE OPERATING CONDITION. MAINTENANCE OF BMPs SHOULD BE PROACTIVE, NOT REACTIVE. INSPECT BMPs AS SOON AS POSSIBLE (AND ALWAYS WITHIN 24 HOURS) FOLLOWING A STORM THAT CAUSES SURFACE EROSION, AND PERFORM NECESSARY MAINTENANCE.

2. FREQUENT OBSERVATIONS AND MAINTENANCE ARE NECESSARY TO MAINTAIN BMPs IN EFFECTIVE OPERATING CONDITION. INSPECTIONS AND CORRECTIVE MEASURES SHOULD BE DOCUMENTED THOROUGHLY.

3. WHERE BMPs HAVE FAILED, REPAIR OR REPLACEMENT SHOULD BE INITIATED UPON DISCOVERY OF THE FAILURE.

4. ECBs SHALL BE LEFT IN PLACE TO EVENTUALLY BIODEGRADE, UNLESS REQUESTED TO BE REMOVED BY THE LOCAL JURISDICTION.

5. ANY ECB PULLED OUT, TORN, OR OTHERWISE DAMAGED SHALL BE REPAIRED OR REINSTALLED. ANY SUBGRADE AREAS BELOW THE GEOTEXTILE THAT HAVE ERODED TO CREATED A VOID UNDER THE BLANKET, OR THAT REMAIN DEVOID OF GRASS SHALL BE REPAIRED, RESEEDED AND MULCHED AND THE ECB REINSTALLED.

NOTE: MANY JURISDICTIONS HAVE BMP DETAILS THAT VARY FROM UDFCD STANDARD DETAILS. CONSULT WITH LOCAL JURISDICTIONS AS TO WHICH DETAIL SHOULD BE USED WHEN DIFFERENCES ARE NOTED.

(DETAILS ADAPTED FROM DOUGLAS COUNTY, COLORADO AND TOWN OF PARKER COLORADO, NOT AVAILABLE IN AUTOCAD)

EPC 7/12/2021

JVA, Inc. 1512 Larimer Street, Suite 710
Denver, CO 80202 303.444.1951
www.jvajva.com
Boulder • Fort Collins • Winter Park
Glenwood Springs • Denver

NO.	DATE	DES'D	DWN	REVISION DESCRIPTION

COLORADO LICENSED PROFESSIONAL ENGINEER KENNETH JAMES TEMPLE 41654 7/1/2021

DESIGNED BY:	RAH/MHT
DRAWN BY:	JGJ
CHECKED BY:	JJM
JOB #:	1051.6e
DATE:	JULY 2021

WOODMOOR WSD NO.1
LAKE PUMP STATION NO. 2 AND PIPELINE
EL PASO COUNTY, COLORADO

EROSION CONTROL DETAILS

SHEET NO.
CE1.7

N:\1051.6e\Drawings\1051.6e - Site Development Plan - ECP - DET.dwg, 7/01/2021 - 2:31 PM, jgj

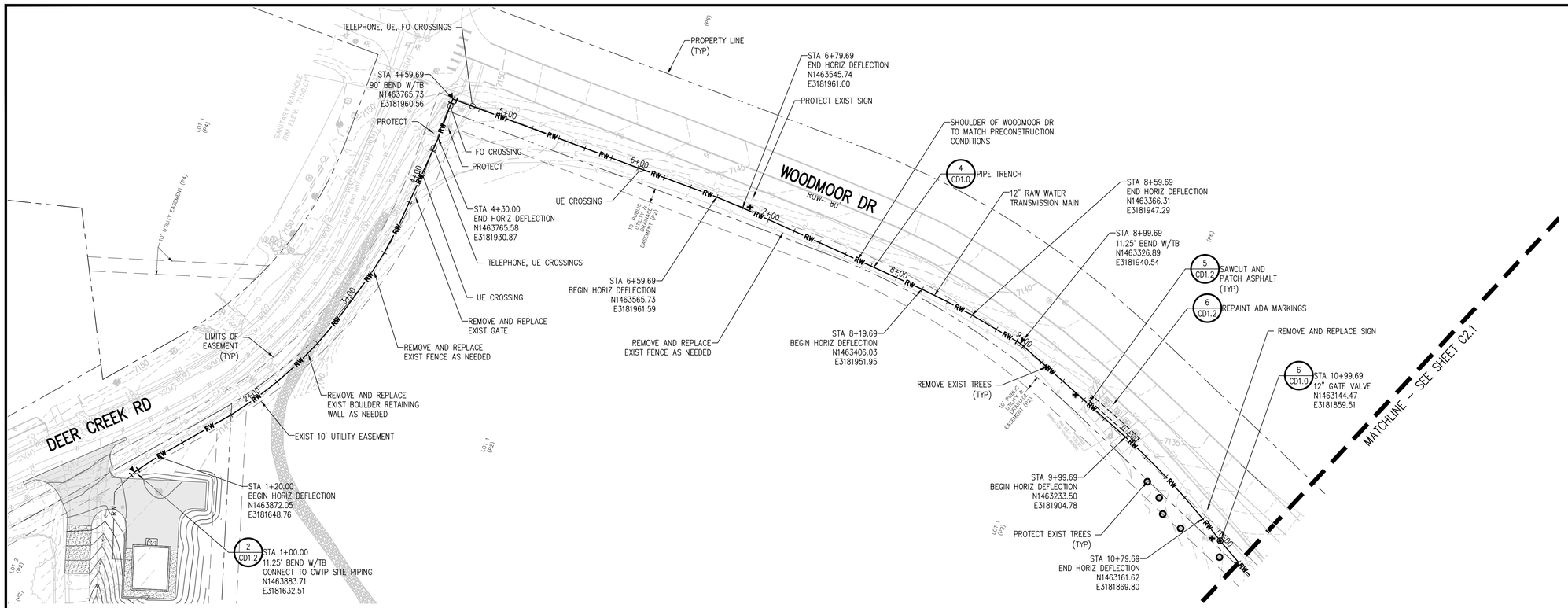

TRANSMISSION MAIN PLAN

SCALE: 1" =40'

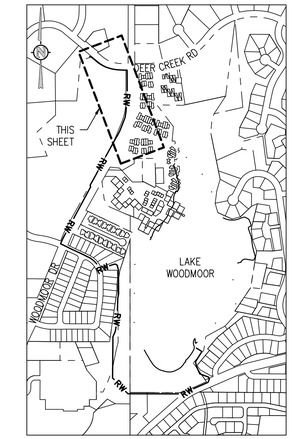

KEY MAP

NTS

40 0 40 80

SCALE IN FEET

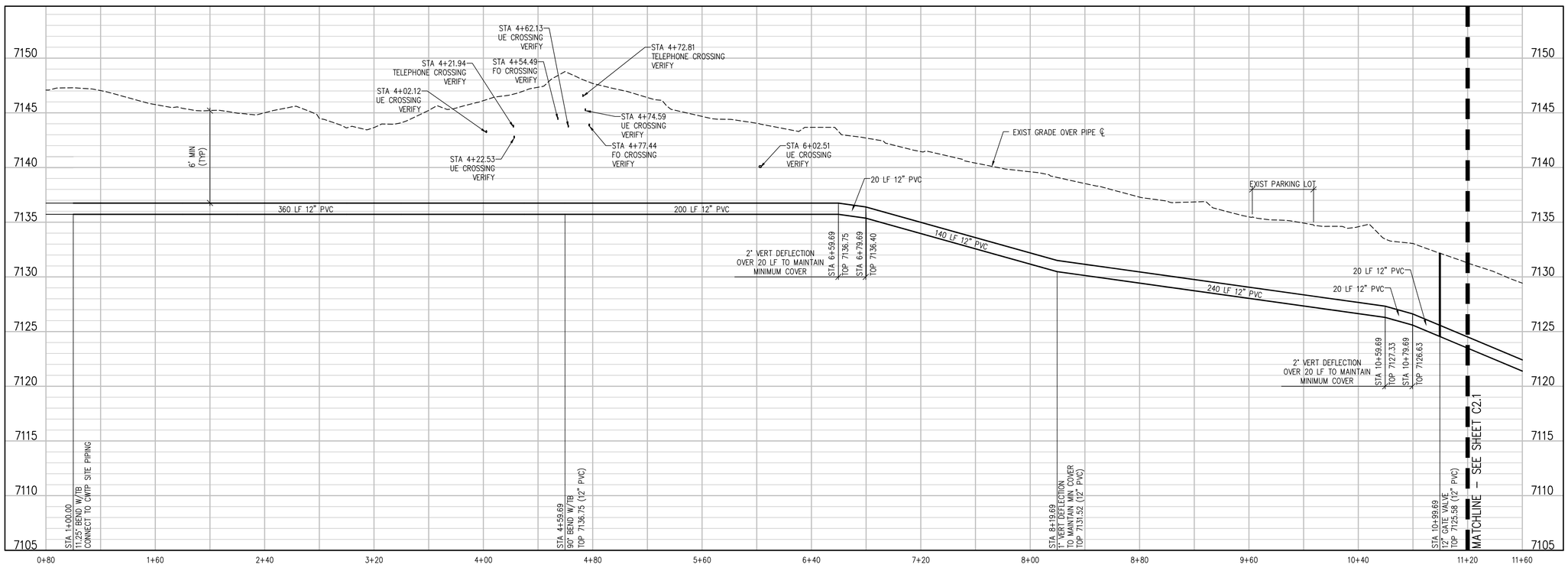

TRANSMISSION MAIN PROFILE

SCALE: 1"=40' HORIZ
1"=5' VERT

EPC 7/12/2021

JVA, Inc.
CONSULTING ENGINEERS
1512 Larimer Street, Suite 710
Denver, CO 80202
303.444.1951
www.jvajva.com
Boulder • Fort Collins • Winter Park
Glenwood Springs • Denver

NO.	DATE	DES'D	DWN	REVISION DESCRIPTION

COLORADO LICENSED PROFESSIONAL ENGINEER
KENNETH JAMES HOLSTEN
41654
7/1/2021

DESIGNED BY:	RAH/MHT
DRAWN BY:	MHT
CHECKED BY:	JJM
JOB #:	1051.6e
DATE:	JULY 2021

WOODMOOR WSD NO.1
LAKE PUMP STATION NO. 2 AND PIPELINE
EL PASO COUNTY, COLORADO

TRANSMISSION MAIN PLAN AND PROFILE

SHEET NO.

C2.0

N:\1051.6e\Drawings\1051.6e – Site Development Plan – PNP.dwg, 7/01/2021 – 2:46 PM, mht

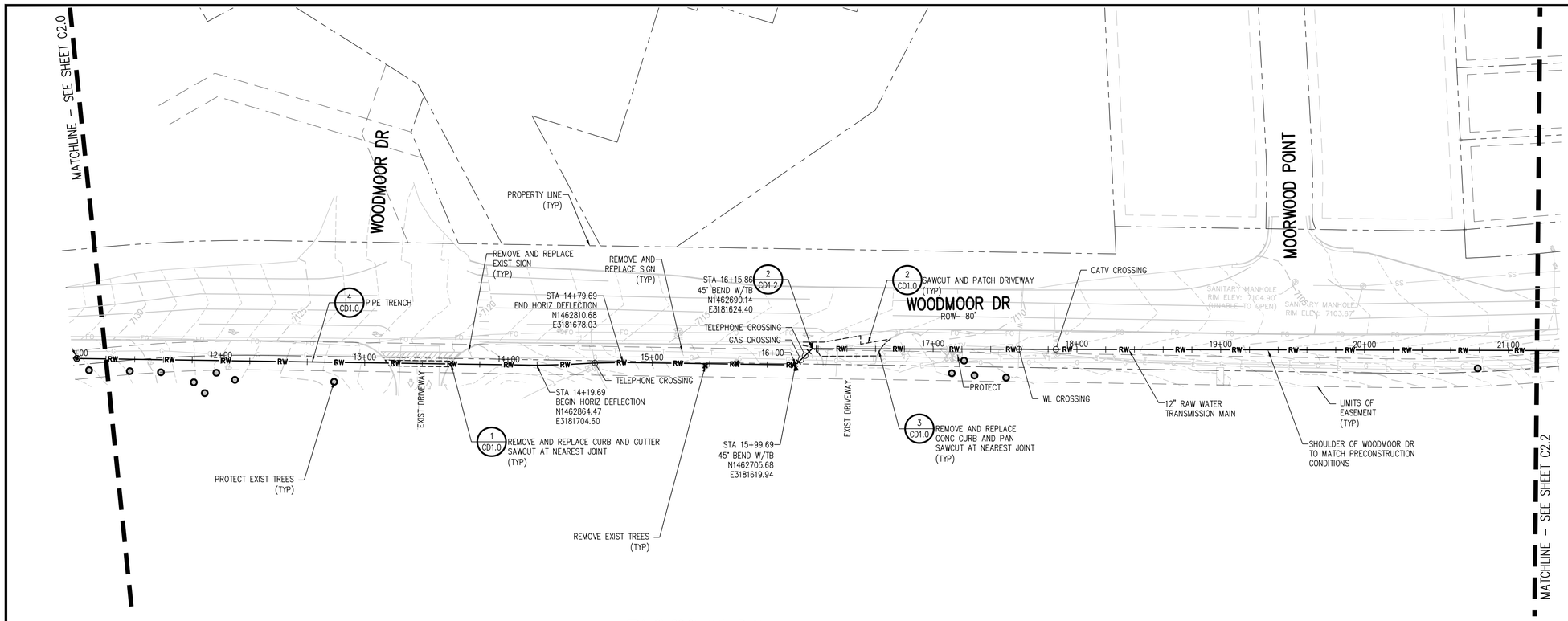

TRANSMISSION MAIN PLAN
SCALE: 1" =40'

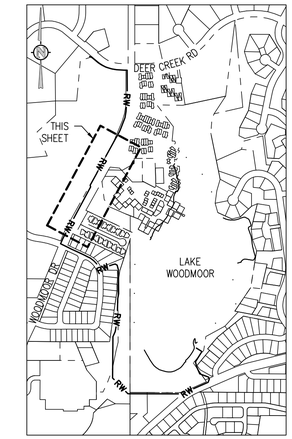

KEY MAP
NTS

40 0 40 80
SCALE IN FEET

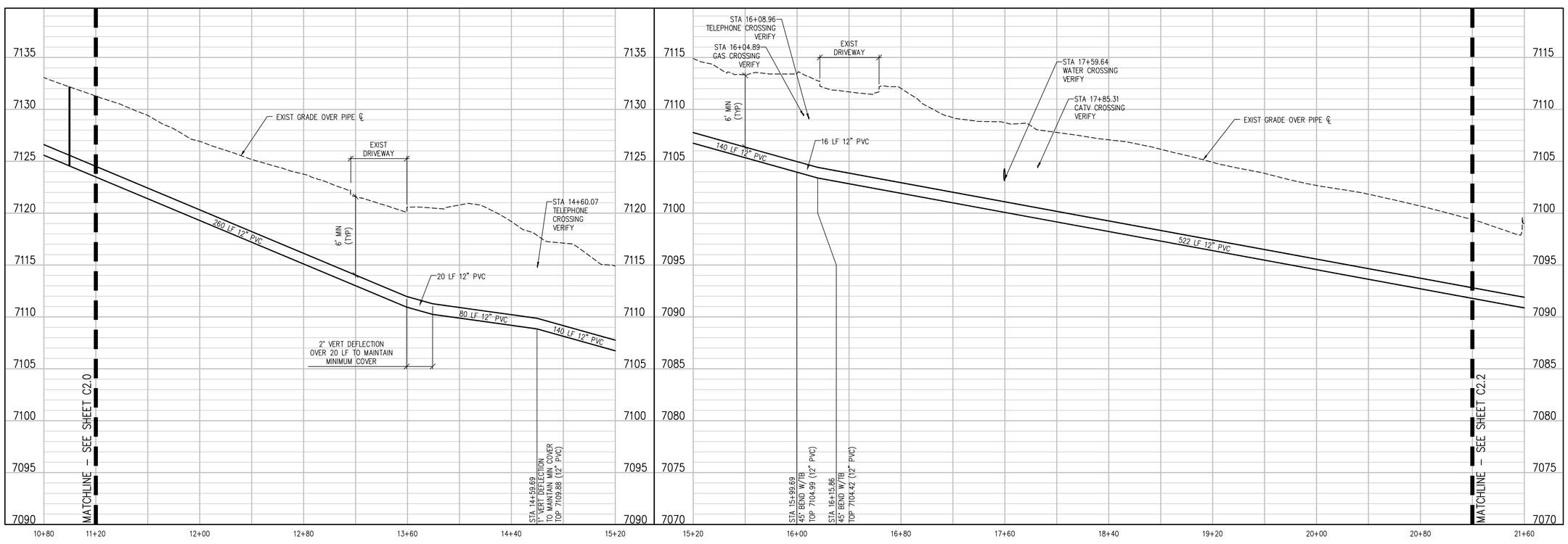

TRANSMISSION MAIN PROFILE
SCALE: 1"=40' HORIZ
1"=5' VERT

TRANSMISSION MAIN PROFILE
SCALE: 1"=40' HORIZ
1"=5' VERT

EPC 7/12/2021

CONSULTING ENGINEERS
JVA, Inc. 1512 Larimer Street, Suite 710
Denver, CO 80202 303.444.1951
www.jvajva.com
Boulder • Fort Collins • Winter Park
Glenwood Springs • Denver

NO.	DATE	DES'D	DWN	REVISION DESCRIPTION

COLORADO LICENSED PROFESSIONAL ENGINEER KENNETH JAMES MCDONALD 41654 7/1/2021

DESIGNED BY:	RAH/MHT
DRAWN BY:	MHT
CHECKED BY:	JJM
JOB #:	1051.6e
DATE:	JULY 2021

WOODMOOR WSD NO.1
LAKE PUMP STATION NO. 2 AND PIPELINE
EL PASO COUNTY, COLORADO

TRANSMISSION MAIN PLAN AND PROFILE

SHEET NO.
C2.1

N:\1051.6e\Drawings\1051.6e – Site Development Plan – PNP.dwg, 7/01/2021 – 2:47 PM, mht

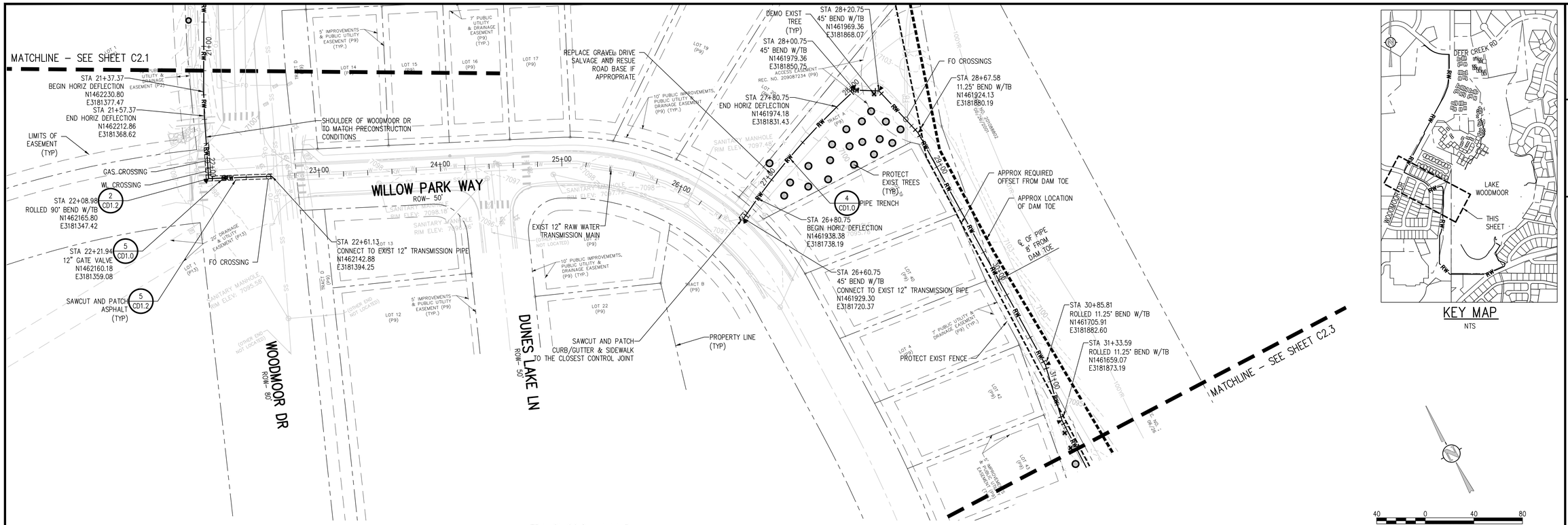

TRANSMISSION MAIN PLAN

SCALE: 1" =40'

KEY MAP

NTS

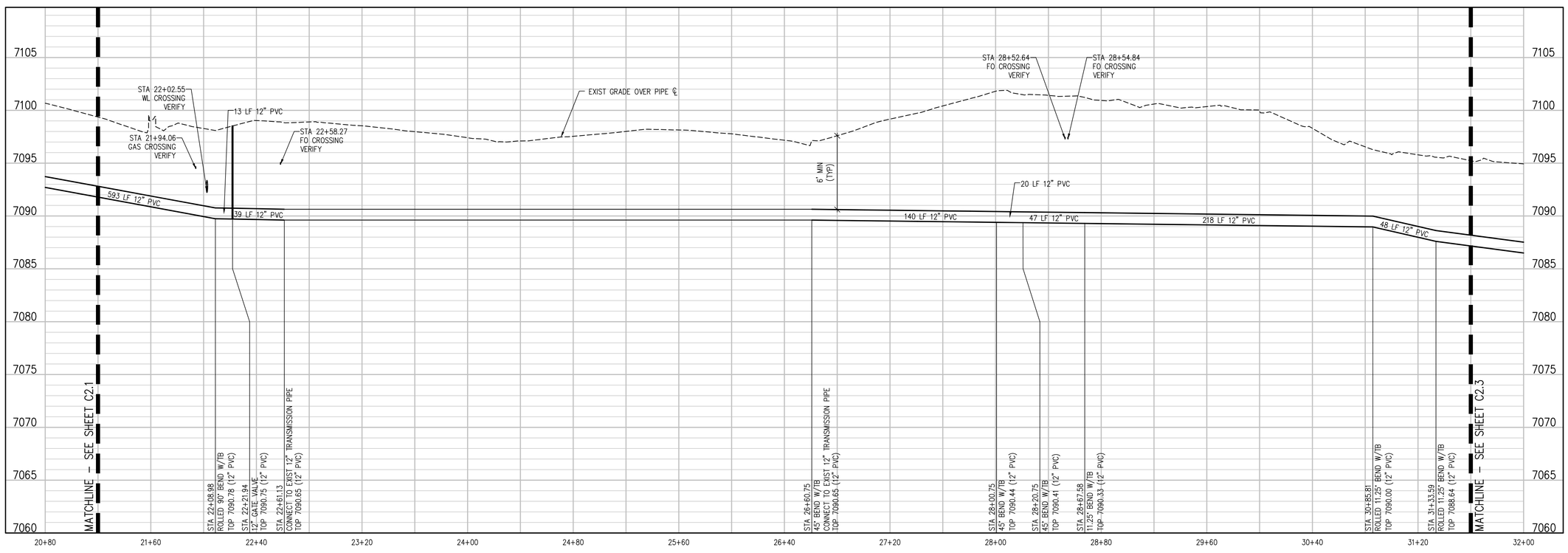

TRANSMISSION MAIN PROFILE

SCALE: 1"=40' HORIZ
1"=5' VERT

EPC 7/12/2021

JVA, Inc. 1512 Larimer Street, Suite 710
Denver, CO 80202 303.444.1951
www.jvajva.com
Boulder • Fort Collins • Winter Park
Glenwood Springs • Denver

NO.	DATE	DES'D	DWN	REVISION DESCRIPTION

COLORADO LICENSED PROFESSIONAL ENGINEER KENNETH JAMES HOFFMAN 41654 7/1/2021

DESIGNED BY:	RAH/MHT
DRAWN BY:	MHT
CHECKED BY:	JJM
JOB #:	1051.6e
DATE:	JULY 2021

WOODMOOR WSD NO.1
LAKE PUMP STATION NO. 2 AND PIPELINE
EL PASO COUNTY, COLORADO

TRANSMISSION MAIN PLAN AND PROFILE

SHEET NO.

C2.2

N:\1051.6e\Drawings\1051.6e – Site Development Plan – PNP.dwg, 7/01/2021 – 2:47 PM, mht

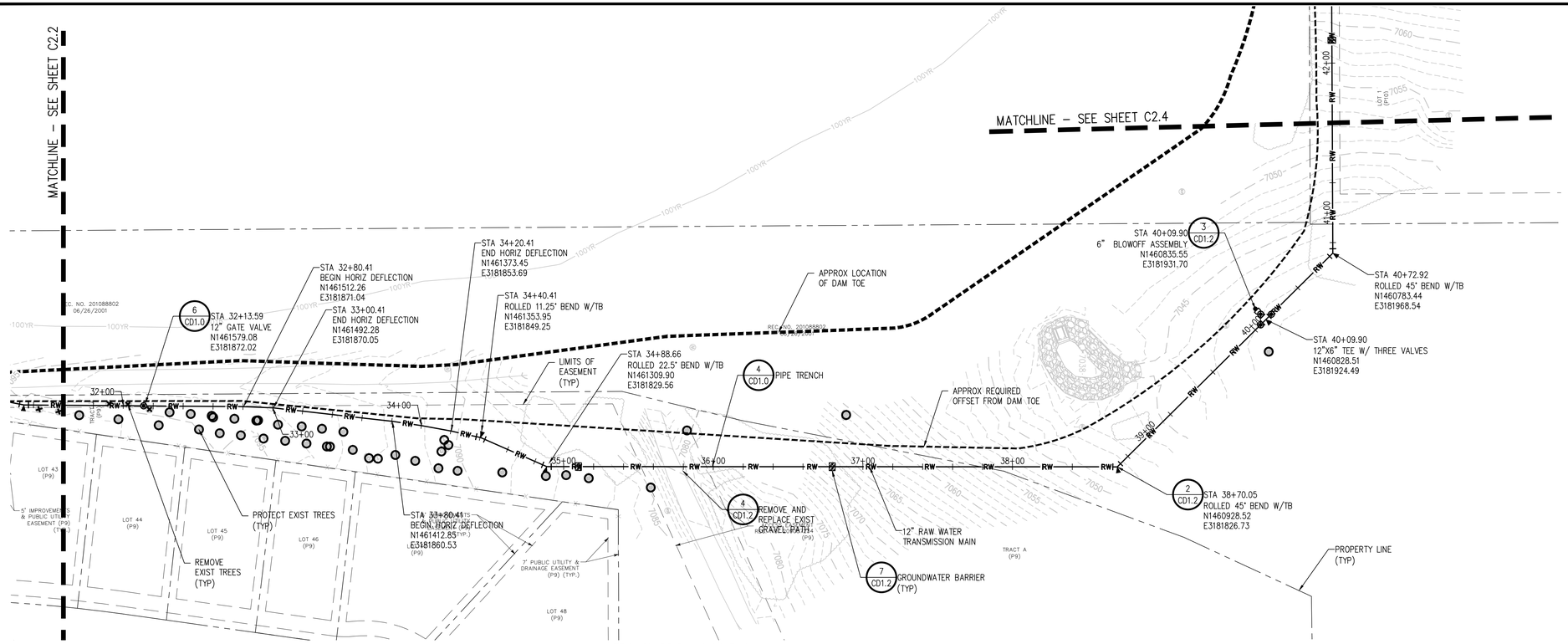

TRANSMISSION MAIN PLAN

SCALE: 1" =40'

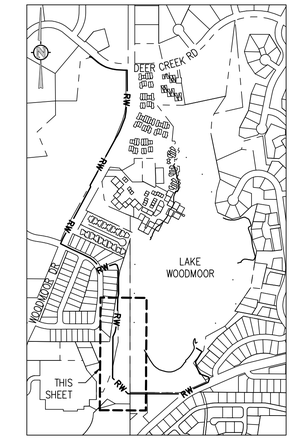

KEY MAP

NTS

40 0 40 80

SCALE IN FEET

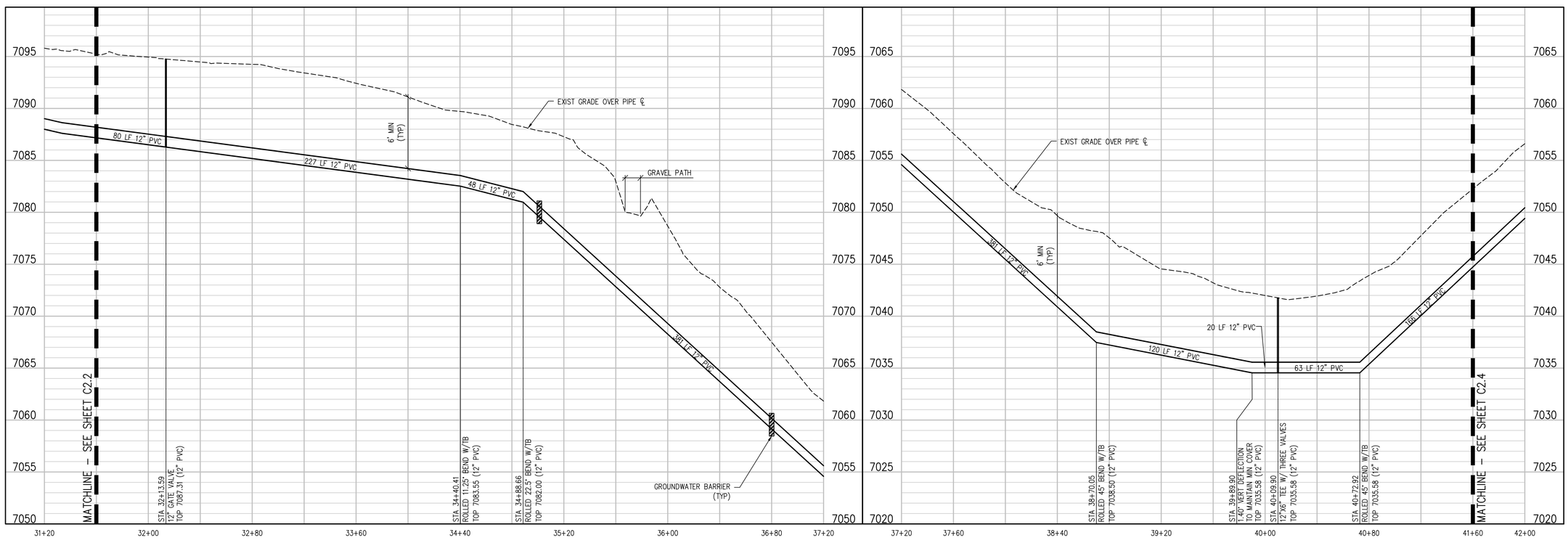

TRANSMISSION MAIN PROFILE

SCALE: 1"=40' HORIZ
1"=5' VERT

TRANSMISSION MAIN PROFILE

SCALE: 1"=40' HORIZ
1"=5' VERT

EPC 7/12/2021

CONSULTING ENGINEERS
JVA, Inc. 1512 Larimer Street, Suite 710
Denver, CO 80202 303.444.1951
www.jvajva.com
Boulder • Fort Collins • Winter Park
Glenwood Springs • Denver

NO.	DATE	DES'D	DWN

REVISION DESCRIPTION

COLORADO LICENSED
KENNETH JAMES CHRISTOPHER
41654
7/1/2021
PROFESSIONAL ENGINEER

DESIGNED BY:	RAH/MHT
DRAWN BY:	MHT
CHECKED BY:	JJM
JOB #:	1051.6e
DATE:	JULY 2021

WOODMOOR WSD NO.1
LAKE PUMP STATION NO. 2 AND PIPELINE
EL PASO COUNTY, COLORADO

TRANSMISSION MAIN PLAN AND PROFILE

SHEET NO.

C2.3

N:\1051.6e\Drawings\1051.6e – Site Development Plan – PNP.dwg, 7/01/2021 – 2:47 PM, mht

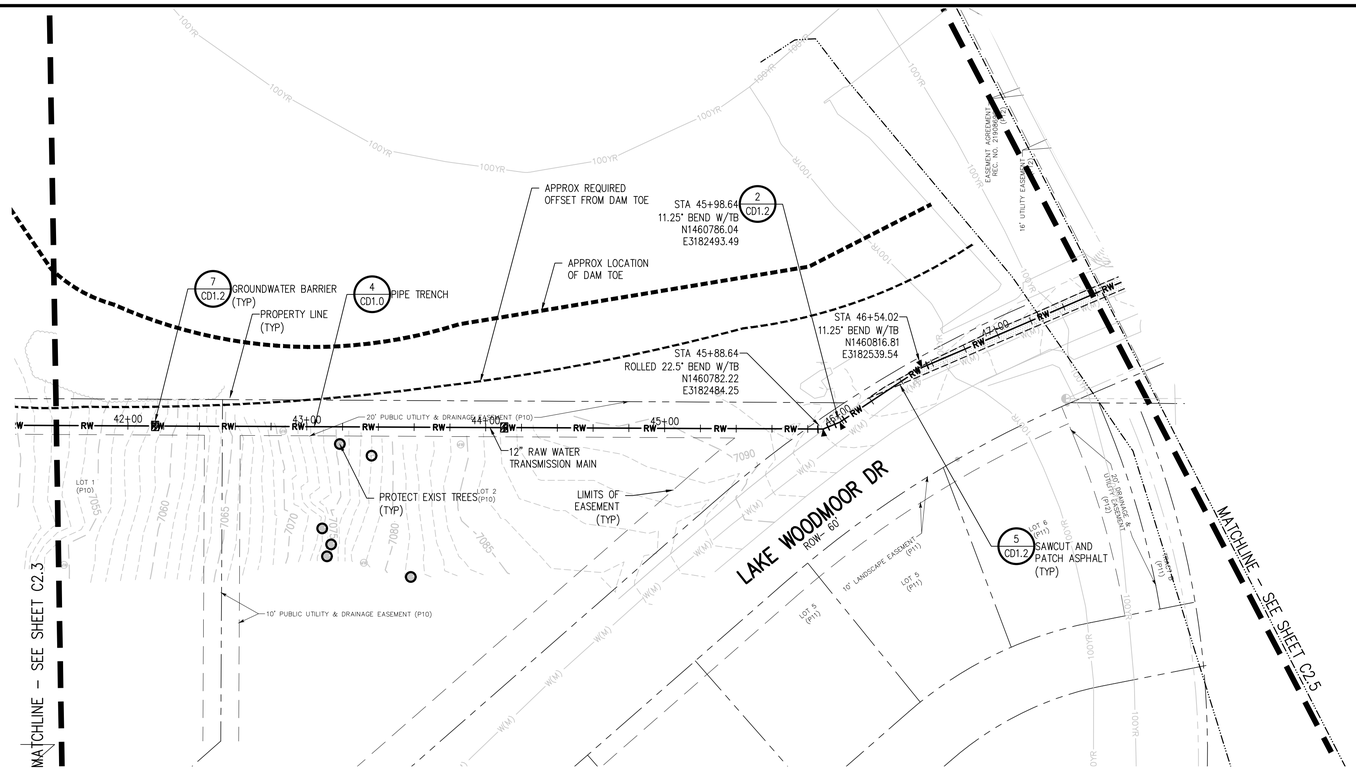

TRANSMISSION MAIN PLAN
SCALE: 1" =40'

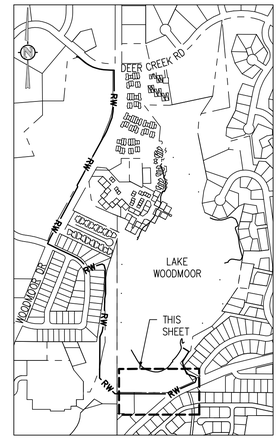

KEY MAP
NTS

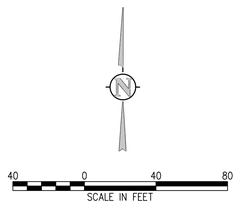

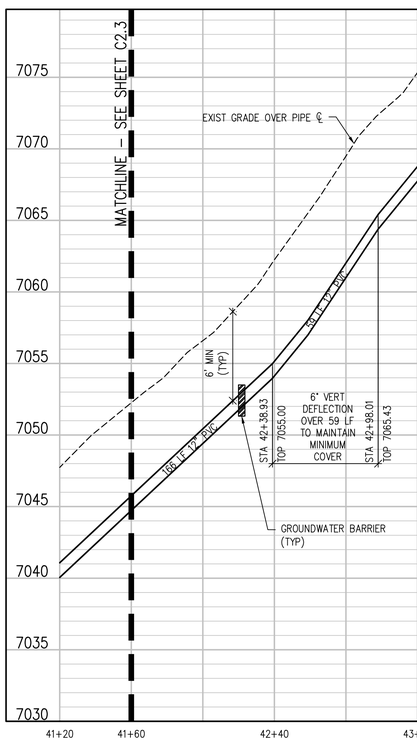

TRANSMISSION MAIN PROFILE
SCALE: 1"=40' HORIZ
1"=5' VERT

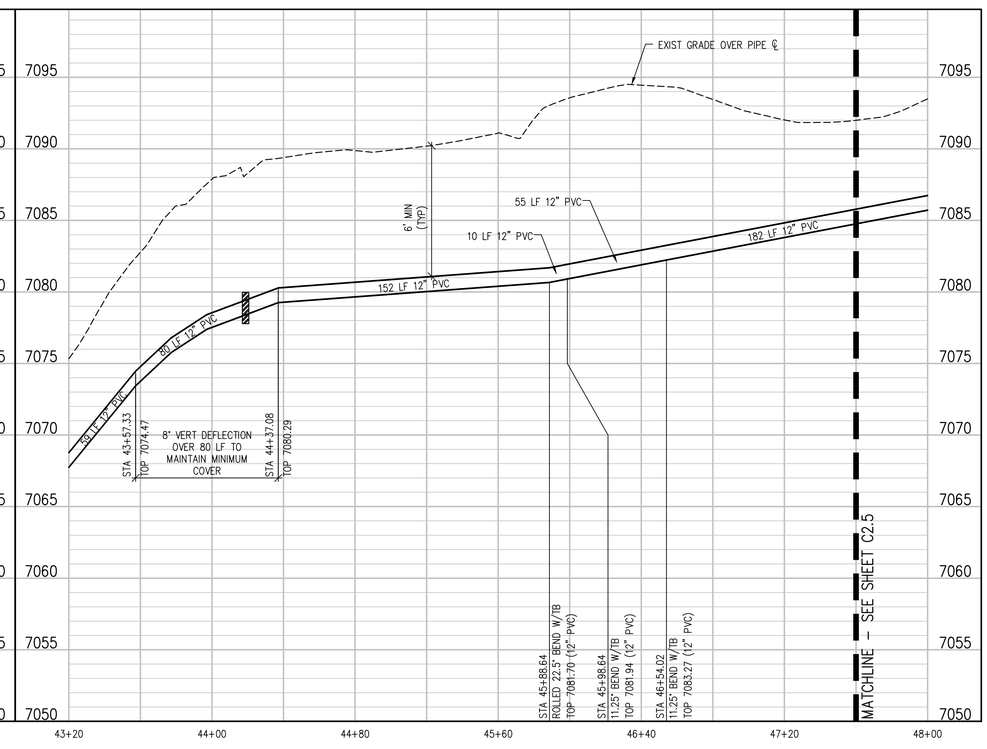

TRANSMISSION MAIN PROFILE
SCALE: 1"=40' HORIZ
1"=5' VERT

EPC 7/12/2021

JVA CONSULTING ENGINEERS
JVA, Inc. 1512 Larimer Street, Suite 710
Denver, CO 80202 303.444.1951
www.jvajva.com
Boulder • Fort Collins • Winter Park
Glenwood Springs • Denver

NO.	DATE	DES'D	DWN	REVISION DESCRIPTION

COLORADO LICENSED PROFESSIONAL ENGINEER KENNETH JAMES MCHUGH 41654 7/1/2021

DESIGNED BY:	RAH/MHT
DRAWN BY:	MHT
CHECKED BY:	JJM
JOB #:	1051.6e
DATE:	JULY 2021

WOODMOOR WSD NO.1
LAKE PUMP STATION NO. 2 AND PIPELINE
EL PASO COUNTY, COLORADO

TRANSMISSION MAIN PLAN AND PROFILE

SHEET NO.
C2.4

N:\1051.6e\Drawings\1051.6e – Site Development Plan – PNP.dwg, 7/01/2021 – 2:47 PM, mht

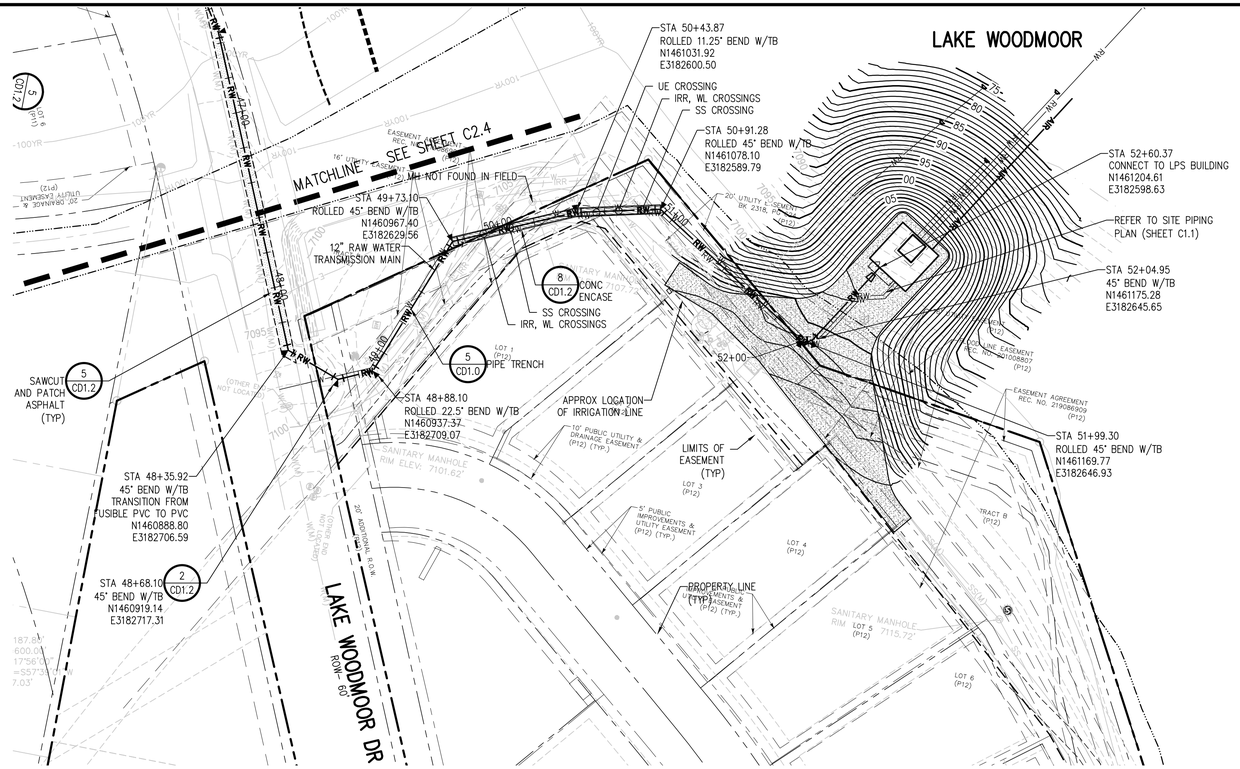

TRANSMISSION MAIN PLAN

SCALE: 1" =40'

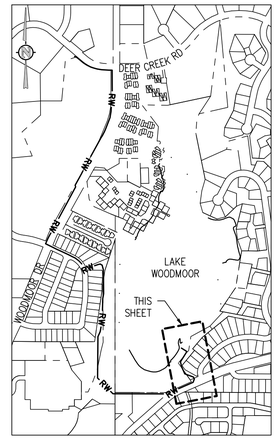

KEY MAP

NTS

40 0 40 80

SCALE IN FEET

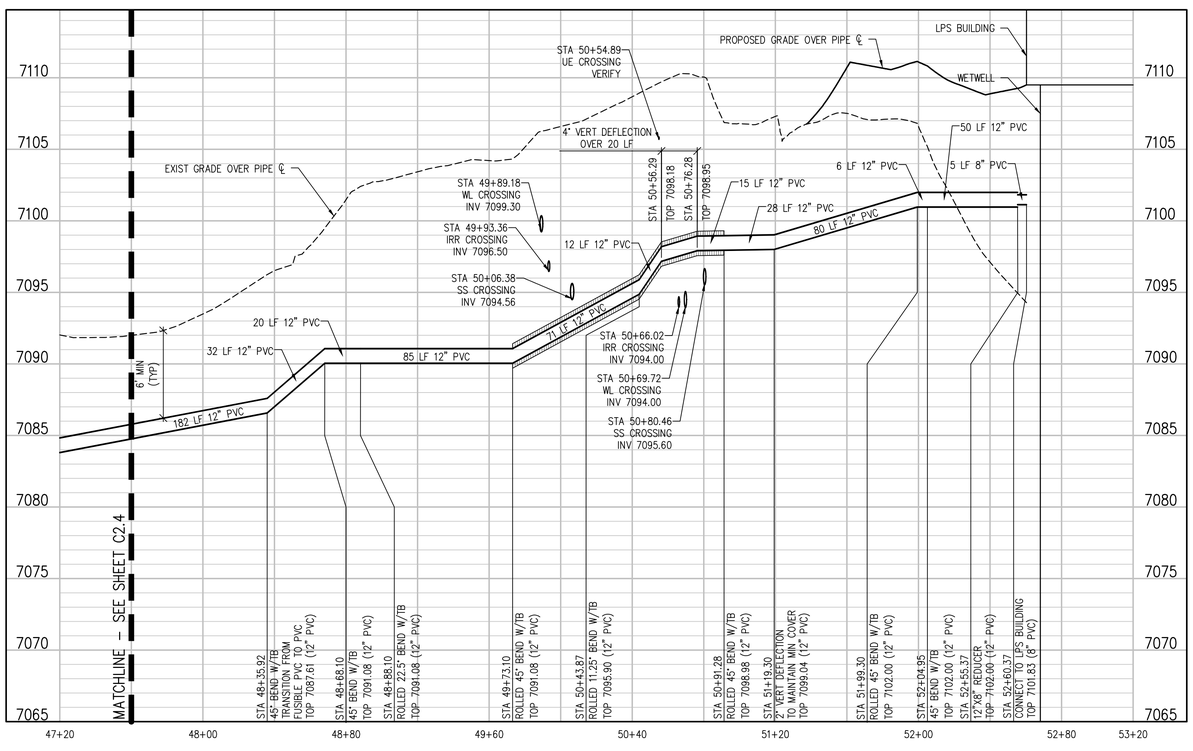

TRANSMISSION MAIN PROFILE

SCALE: 1"=40' HORIZ
1"=5' VERT

EPC 7/12/2021

JVA, Inc. 1512 Larimer Street, Suite 710
Denver, CO 80202 303.444.1951
www.jvajva.com
Boulder • Fort Collins • Winter Park
Glenwood Springs • Denver

NO.	DATE	DES'D	DWN	REVISION DESCRIPTION

COLORADO LICENSED
KENNETH JAMES MCDONALD
41654
7/1/2021
PROFESSIONAL ENGINEER

DESIGNED BY:	RAH/MHT
DRAWN BY:	MHT
CHECKED BY:	JJM
JOB #:	1051.6e
DATE:	JULY 2021

WOODMOOR WSD NO.1
LAKE PUMP STATION NO. 2 AND PIPELINE
EL PASO COUNTY, COLORADO

TRANSMISSION MAIN PLAN AND PROFILE

SHEET NO.

C2.5

N:\1051.6e\Drawings\1051.6e - Site Development Plan - PNP.dwg, 7/01/2021 - 2:47 PM, mht

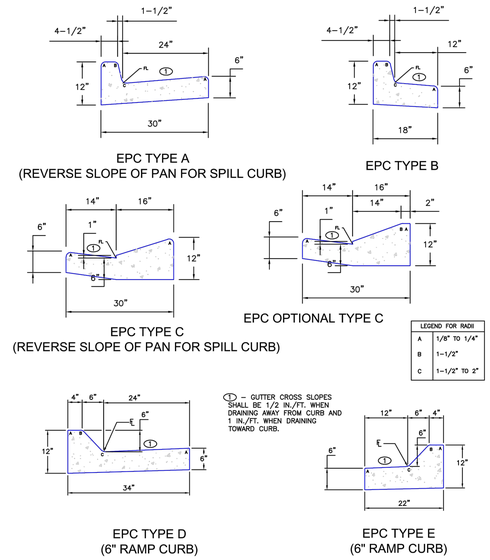

LEGEND FOR RADII	
A	1/8" TO 1/4"
B	1-1/2"
C	1-1/2" TO 2"

SCALE: NOT TO SCALE

8/11/11 DATE APPROVED: André P. Brackin DEPARTMENT OF TRANSPORTATION	Typical Curb and Gutter Details Standard Drawing	REVISION DATE: 12/8/15 FILE NAME: SD_2-20

TYPICAL CURB AND GUTTER DETAIL (1 / C2.1)
NTS

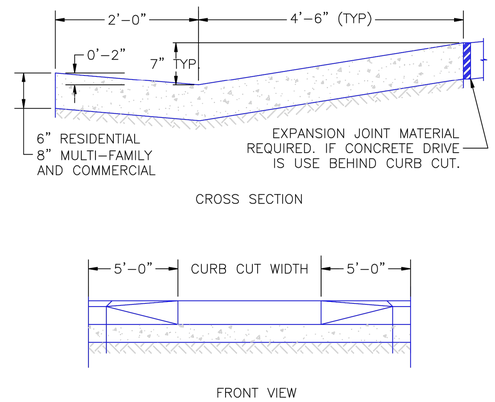

SCALE: NOT TO SCALE

8/11/11 DATE APPROVED: André P. Brackin DEPARTMENT OF TRANSPORTATION	Driveway Cut Detail Standard Drawing	REVISION DATE: 11/10/04 FILE NAME: SD_2-23

DRIVEWAY CUT DETAIL (2 / C2.1)
NTS

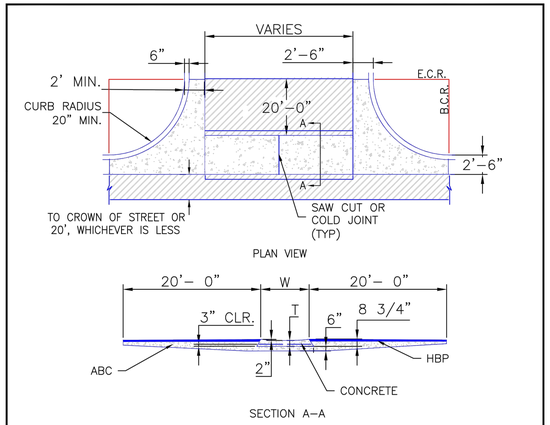

NOTES

1. W – WIDTH SHALL BE 6' FOR LOCAL, 8' FOR COLLECTORS, AND 10' FOR ARTERIAL ROADS.

2. T – SQUARED-OFF RETURN TO BE POURED MONOLITHICALLY, 8" PCC FOR LOCAL ROADS, 9" FOR COLLECTORS WITH 6x6 – 4.4 W.W.F. OR #4 REINFORCING BAR @ 18" EACH WAY.

3. = 3" MINIMUM ASPHALT DEPTH (2 LIFTS).

4. DESIGN TO SPECIFY ELEVATIONS AT PI AND PCR.

SCALE: NOT TO SCALE

8/11/11 DATE APPROVED: André P. Brackin DEPARTMENT OF TRANSPORTATION	Typical Cross Pan Layout Detail Standard Drawing	REVISION DATE: 12/8/15 FILE NAME: SD_2-26

TYPICAL CROSS PAN LAYOUT DETAIL (3 / C2.1)
NTS

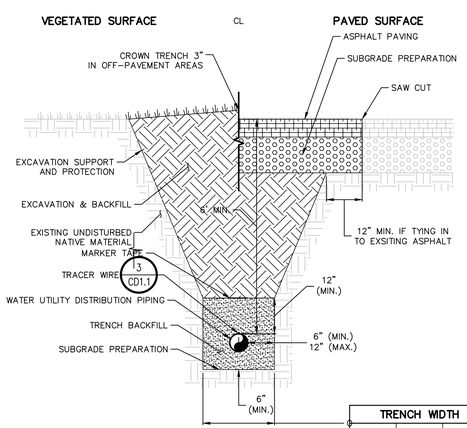

TRENCH WIDTH		
PIPE DIAMETER	MINIMUM WIDTH	MAXIMUM WIDTH
4"	1'-4"	2'-4"
6"	1'-6"	2'-6"
8"	1'-8"	2'-8"
10"	1'-10"	2'-10"
12"	2'-0"	3'-0"
14"	2'-2"	3'-2"

WOODMOOR WATER & SANITATION DISTRICT NO. 1 STANDARD DETAIL W-1

TYPICAL WATER TRENCH DETAIL (4 / C2.0)
NTS

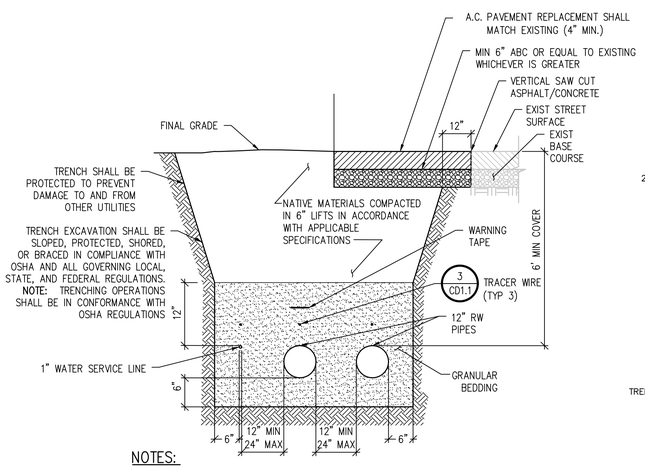

NOTES:

1. IF UNSTABLE MATERIALS ARE FOUND IN TRENCH BOTTOM, OVER EXCAVATE 12" BELOW STD EMBEDMENT AND FILL WITH 3/4" CRUSHED ROCK, COMPACTED TO 95%
2. COMPACTED BACKFILL TO 90% STD PROCTOR DENSITY IN NON-DRIVING SURFACES AND 95% UNDER PAVEMENT
3. SHOULD THE TRENCH BE EXCAVATED WIDER THAN ALLOWED A CONCRETE CRADLE SHALL BE PLACED WITH 2500PSI CONCRETE FROM TRENCH BOTTOM TO PIPE SPRINGLINE

UTILITY TRENCH DETAIL (5 / C1.1)
NTS

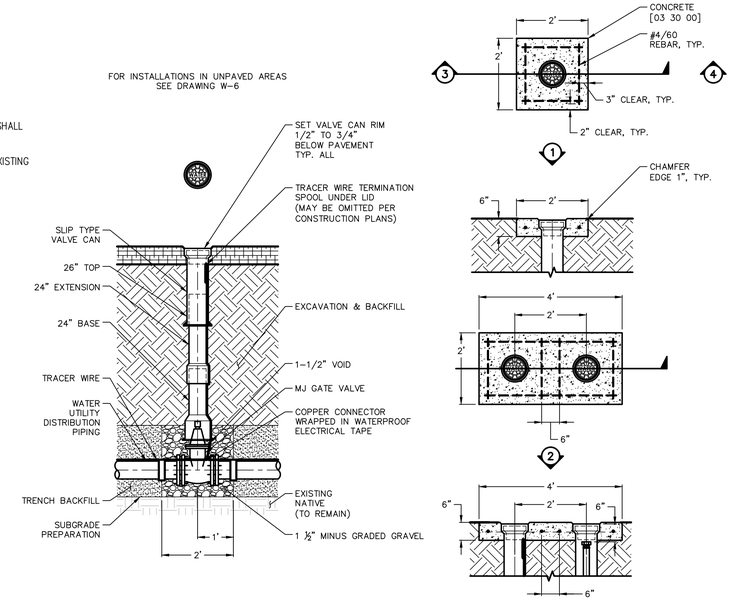

WOODMOOR WATER & SANITATION DISTRICT NO. 1 STANDARD DETAIL W-4

WOODMOOR WATER & SANITATION DISTRICT NO. 1 STANDARD DETAIL W-6

GATE VALVE DETAIL (6 / C2.0)
NTS

EPC 7/12/2021

JVA, Inc. 1512 Larimer Street, Suite 710
Denver, CO 80202 303.444.1951
www.jvajva.com
Boulder • Fort Collins • Winter Park
Glenwood Springs • Denver

NO.	DATE	DES'D	DWN	REVISION DESCRIPTION

COLORADO LICENSED PROFESSIONAL ENGINEER KENNETH JAMES MARTIN 41654 7/1/2021

DESIGNED BY:	RAH/MHT
DRAWN BY:	MHT
CHECKED BY:	JJM
JOB #:	1051.6e
DATE:	JULY 2021

WOODMOOR WSD NO.1
LAKE PUMP STATION NO. 2 AND PIPELINE
EL PASO COUNTY, COLORADO

CIVIL DETAILS

SHEET NO.
CD1.0

N:\1051.6e\Drawings\1051.6e – Site Development Plan – CD10.dwg, 7/01/2021 – 2:32 PM, jbj

ROD DIAMETER, GRADE & LENGTH OF RESTRAINED PIPE

PIPE SIZE	4"			6"			8"			12"			16"			20"			24"		
FITTING	D	L	G	D	L	G	D	L	G	D	L	G	D	L	G	D	L	G	D	L	G
90° BEND, TEE, OR PLUG	3/4"	30'	MS	3/4"	45'	MS	3/4"	60'	MS	3/4"	86'	HS	1"	108'	MS	1-1/4"	132'	HS	—	155'	—
VALVE	—	—	—	—	—	—	—	—	—	—	—	—	1"	108'	MS	1-1/4"	132'	HS	—	155'	—
45° BEND	3/4"	9'	MS	3/4"	13'	MS	3/4"	18'	MS	3/4"	25'	MS	1"	32'	MS	3/4"	39'	HS	—	45'	—
22-1/2° BEND	3/4"	1'	MS	3/4"	4'	MS	3/4"	5'	MS	3/4"	7'	MS	3/4"	8'	MS	3/4"	10'	MS	—	12'	—
11-1/4° BEND	—	—	—	—	—	—	3/4"	1'	MS	3/4"	2'	MS	3/4"	2'	MS	3/4"	3'	MS	—	3'	—

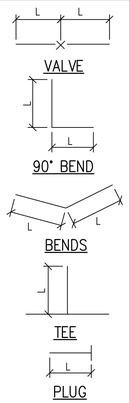

NOTES:

1. LENGTH OF RESTRAINED PIPE MEASURED EACH WAY FROM VALVES AND BENDS
2. CLAMPS, RODS & MEGALUGS NOT ALLOWED FOR 24" & LARGER PIPES
3. D=DIAMETER, L=LENGTH, G=GRADE, MS=MILD STEEL, HS=HIGH STRENGTH
4. MINIMUM 4.5' GROUND COVER REQUIRED
5. MS MEANS MILD STEEL ROD ASTM STANDARD DESIGNATION A-36
6. HS MEANS HIGH STRENGTH ROD ASTM STANDARD DESIGNATION A-193 GRADE B-7
7. NUTS SHALL BE ASTM STANDARD DESIGNATION A-307 GRADE A OR B HEXAGON HEAVY SERIES. HIGH STRENGTH NUTS SHALL CONFORM TO MS-22
8. MEGALUG MECHANICAL JOINT RESTRAINT CAN BE USED IN LIEU OF TIE RODS FOR DIP OR PVC MAINS
9. LENGTH REFERS TO THE AMOUNT OF PIPE WHICH MUST BE RESTRAINED TOGETHER AND IS NOT NECESSARILY THE LENGTH OF THE RODS
10. LENGTH OF RESTRAINED PIPE CHART IS ALSO FOR THE LENGTH OF JOINT RESTRAINT FOR MEGALUGS
11. CROSSES MUST BE RESTRAINED IN ALL APPLICABLE DIRECTIONS
12. 12" AND SMALLER IN LINE VALVES AND TEES SHALL HAVE A MECHANICAL JOINT RESTRAINT DEVICES ON EACH SIDE OF THE FITTING OR VALVE. MECHANICAL JOINT RESTRAINT DEVICES SHALL BE PER MS-2 OF THE ENGINEERING STANDARDS.
13. A SECOND VALVE WILL BE REQUIRED TO BE CLOSED WHEN EXCAVATING NEXT TO AN EXISTING VALVE

LENGTH OF RESTRAINED PIPE DETAIL (1)
NTS

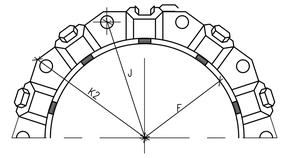

MECHANICAL JOINT RESTRAINT

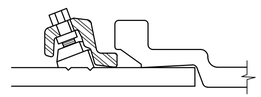

WEDGE DETAIL

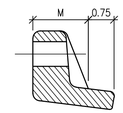

BOLT HOLE DETAIL

DIMENSIONS

	NOMINAL PIPE SIZE	NO. OF BOLTS	NO. OF WEDGES	K2 INCHES	J INCHES	F INCHES	M INCHES	
PVC	4"	2	2					PVC
	6"	6	3	11.12	9.50	7.00	0.88	
	8"	6	4	13.37	11.75	9.15	1.00	
	10"	8	6	15.62	14.00	11.20	1.00	
	12"	8	8	17.88	16.25	13.30	1.25	
DI	4"	4	2					DI
	6"	6	3	11.12	9.50	7.00	0.88	
	8"	6	4	13.37	11.75	9.15	1.00	
	10"	8	6	15.62	14.00	11.20	1.00	
	12"	8	8	17.88	16.25	13.30	1.25	
	16"	12	12	22.50	21.00	17.54	1.56	
	20"	14	14	27.00	25.50	21.74	1.69	

NOTE:

1. BASED ON "MEGA LUG" PIPE RESTRAINT SYSTEM BY EBAA IRON
2. OTHER MECHANICAL JOINT RESTRAINT DEVICES MUST BE APPROVED BEFORE INSTALLATION.

MECHANICAL JOINT RESTRAINT DETAIL (2)
NTS

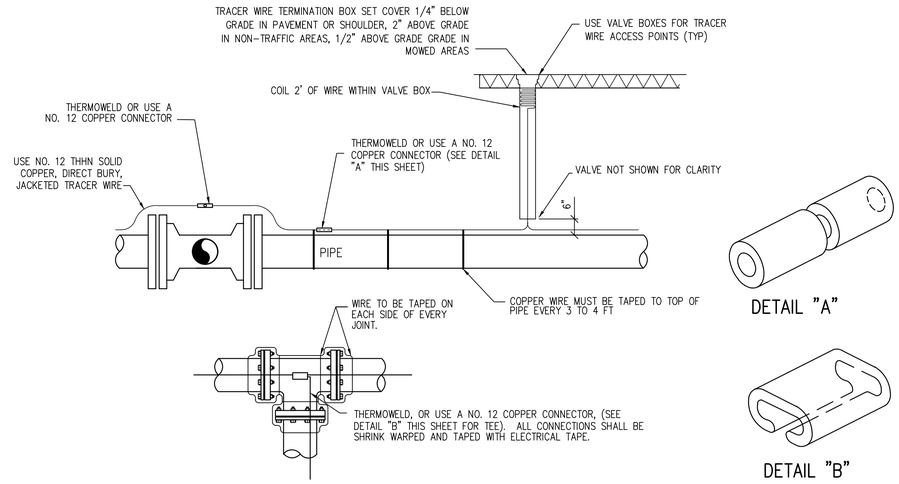

COPPER TRACER WIRE DETAIL (OPEN CUT METHOD) (3 CD1.0)
NTS

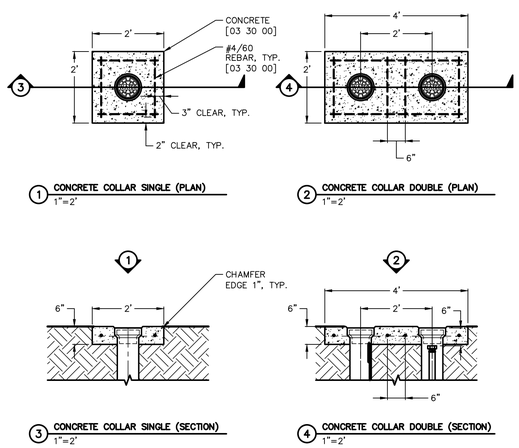

(1) CONCRETE COLLAR SINGLE (PLAN) 1"=2'

(2) CONCRETE COLLAR DOUBLE (PLAN) 1"=2'

(3) CONCRETE COLLAR SINGLE (SECTION) 1"=2'

(4) CONCRETE COLLAR DOUBLE (SECTION) 1"=2'

WOODMOOR WATER & SANITATION DISTRICT NO. 1 STANDARD DETAIL W-6

VALVE CANS IN UNPAVED AREAS (4)
NTS

REFER TO WATER & SEWER SERVICE LINE EQUIPMENT SPECIFICATIONS FOR SUPPLEMENTAL INFORMATION (APP C OF THE SYSTEM SPECIFICATIONS)

GENERAL NOTES:
- PROVIDE METAL T-POST AT CURB STOP WHEN CONSTRUCTION OF STUB-OUT TO LOT IS COMPLETE. T-POST MAY BE REMOVED AFTER CONNECTION TO SERVICE STUB.

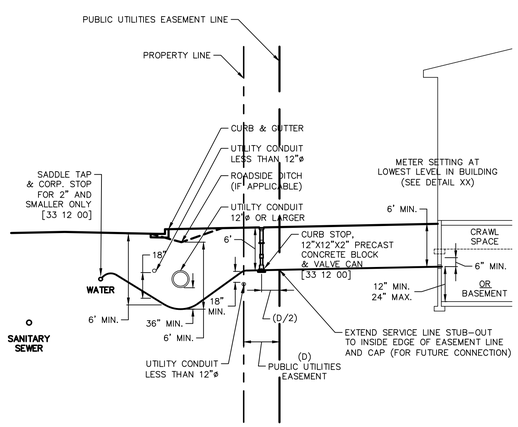

WOODMOOR WATER & SANITATION DISTRICT NO. 1 STANDARD DETAIL G-6

WATER SERVICE (3/4" TO 2") (5 C1.1)
NTS

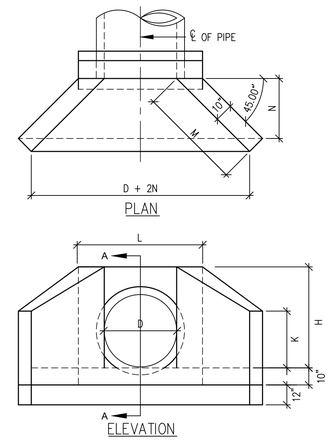

DIMENSIONS

D	AREA SQ FT	T	H	K	L	M	N
15"	1.23	2 1/4"	2'-5 1/4"	1'-5"	3'-7"	1'-9"	1'-3"
18"	1.77	2 1/2"	2'-8 1/2"	1'-7"	3'-10"	2'-1 1/2"	1'-6"
24"	3.14	3"	3'-3"	1'-10 1/2"	4'-4"	2'-10"	2'-0"
30"	4.91	3 1/2"	3'-9 1/2"	2'-2"	4'-10"	3'-6 1/2"	2'-6"
36"	7.07	4"	4'-4"	2'-5 1/2"	5'-4"	4'-3"	3'-0"
42"	9.62	4 1/2"	4'-10 1/2"	2'-9"	5'-10"	4'-1 1/2"	3'-6"

NOTES:

1. CONCRETE SHALL BE CLASS B. CAST-IN-PLACE CONCRETE SHALL CONFORM TO ASTM C478
2. CAST-IN-PLACE CONCRETE WALL EDGES SHALL BE CHAMFERED 3/4".
3. ALL WALLS AND BASE SHALL BE REINFORCED WITH #4'S @ 12" OC EACH WAY. REINFORCING BARS SHALL BE DEFORMED AND SHALL HAVE 3" MINIMUM CLEARANCE FROM FACE OF CONCRETE.
4. DIMENSIONS AND MATERIAL REQUIREMENTS VARY DEPENDING ON APPLICATION. FOR COMPLETE DETAILS, MEASUREMENTS, MATERIALS LIST, AND OTHER FACTORS REFER TO THE CURRENT CDOT M7S STANDARDS.
5. TRASH RACK SHALL BE RFP, OR ENGINEER ACCEPTED CORROSION RESISTANT MATERIAL, WITH 1" OPENINGS. TRASH RACK SHALL BE SECURED TO THE CONCRETE HEADWALL WITH STAINLESS STEEL HARDWARE.

HEADWALL WITH CIRCULAR PIPE DETAIL (6 C1.1)
NTS

EPC 7/12/2021

JVA, Inc. 1512 Larimer Street, Suite 710
Denver, CO 80202 303.444.1951
www.jvajva.com
Boulder • Fort Collins • Winter Park
Glenwood Springs • Denver

NO.	DATE	DES'D	DWN	REVISION DESCRIPTION

COLORADO LICENSED PROFESSIONAL ENGINEER KENNETH JAMES MCDONALD 41654 7/1/2021

DESIGNED BY:	RAH/MHT
DRAWN BY:	MHT
CHECKED BY:	JJM
JOB #:	1051.6e
DATE:	JULY 2021

WOODMOOR WSD NO.1
LAKE PUMP STATION NO. 2 AND PIPELINE
EL PASO COUNTY, COLORADO

CIVIL DETAILS

SHEET NO.
CD1.1

N:\1051.6e\Drawings\1051.6e - Site Development Plan - CD10.dwg, 7/01/2021 - 2:32 PM, jbj

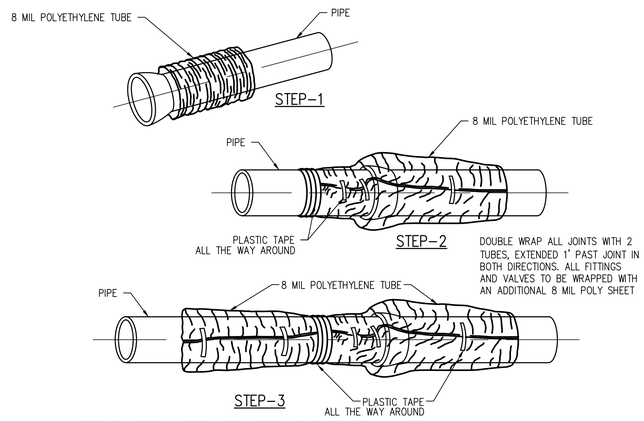

FIELD INSTALLATION-POLYETHYLENE WRAP

STEP-1 PLACE TUBE OF POLYETHYLENE MATERIAL AROUND PIPE PRIOR TO LOWERING PIPE INTO TRENCH

STEP-2 PULL THE TUBE OVER THE LENGTH OF THE PIPE. TAPE TUBE TO PIPE AT JOINT FOLD MATERIAL AROUND THE ADJACENT SPIGOT END AND WRAP WITH THREE CIRCUMFERENTIAL TURNS OF TWO-INCH WIDE PLASTIC TAPE TO HOLD PLASTIC TUBE AROUND SPIGOT END

STEP-3 ADJACENT TUBE OVERLAPS FIRST TUBE AND IS SECURED WITH PLASTIC ADHESIVE TAPE. THE POLYETHYLENE TUBE MATERIAL COVERING THE PIPE WILL BE LOOSE. EXCESS MATERIAL AND SHOULD BE NEATLY DRAWN UP AROUND THE PIPE BARREL, FOLDED INTO AN OVERLAP ON TOP OF THE PIPE AND HELD IN PLACE BY MEANS OF PIECES OF THE PLASTIC TAPE AT APPROXIMATELY THREE TO FIVE FOOT INTERVALS

NOTE:
ALL RODDING TO BE ENCASED IN POLYETHYLENE SEPARATED FROM THE PIPE

POLYETHYLENE WRAP DETAIL (1)
NTS

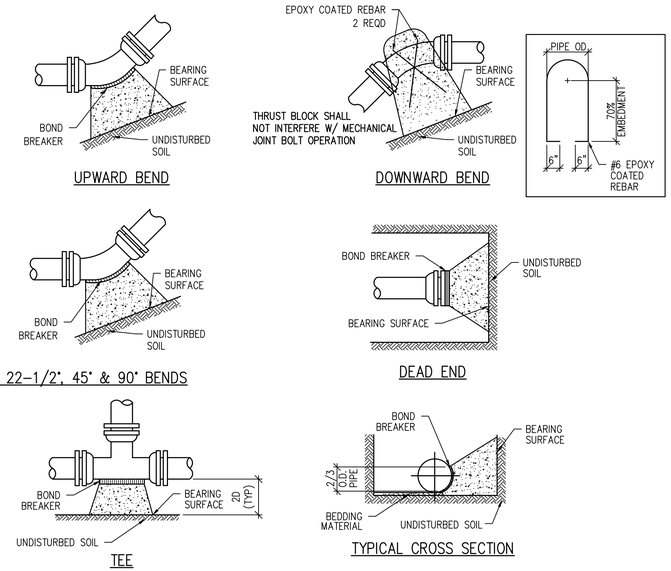

NOTES:
1. BEARING SURFACES SHOWN IN CHART ARE MINIMUM SQUARE FEET
2. BASED ON 150 PSI INTERNAL PIPE PRESSURE PLUS WATER HAMMER. 4", 6", 8", & 12" WATER HAMMER = 110 PSI 16", 20" AND 24" WATER HAMMER = 70 PSI
3. BASED ON 3000 PSF SOIL BEARING CAPACITY
4. USE TYPE II PORTLAND CEMENT 3000 PSI CONCRETE
5. ALL VALVES, TEES, BENDS AND PLUGS SHALL BE RESTRAINED AND KICKBLOCKED

SIZE OF PIPE	SURFACE AREA (SQ FT)					CONC VOL (CU YD)
	TEE OR DEAD END	BENDS				
		11-1/4°	22-1/2°	45°	90°	VERT 45°
2"	1.50	1.00	1.00	1.00	2.0	0.34
4"	1.50	1.00	1.00	1.00	2.0	0.34
6"	3.00	1.00	1.25	2.25	4.5	0.71
8"	5.25	1.00	2.00	4.00	8.0	1.22
12"	11.25	2.25	4.50	8.75	17.0	1.83
16"	19.00	3.50	7.50	14.50	27.00	2.59
20"	25.00	5.00	10.00	19.50	35.50	6.93
24"	36.00	6.50	14.00	27.75	51.00	9.88

MINIMUM BEARING SURFACE AREA (IN SQUARE FEET)

CONCRETE THRUST BLOCK DETAIL (2 C2.0)
NTS

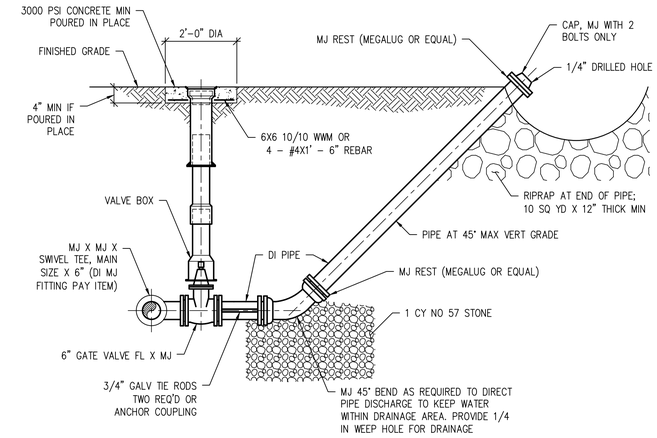

6" BLOW-OFF ASSEMBLY DETAIL (3 C2.3)
NTS

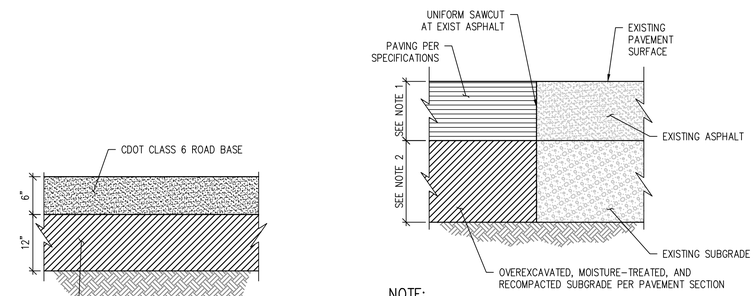

NOTE:
1. MATCH EXISTING DEPTH +1" OR 3" MINIMUM, WHICHEVER IS GREATER
2. MATCH EXIST SUBGRADE DEPTH UNLESS OTHERWISE SPECIFIED
3. APPLY TACKIFIER AT SAWCUT PRIOR TO PAVING.

ASPHALT PATCH DETAIL (5 C2.0)
NTS

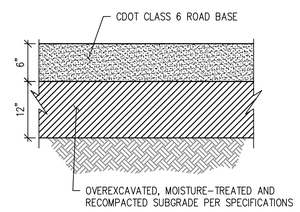

GRAVEL SECTION DETAIL (4 C1.0)
NTS

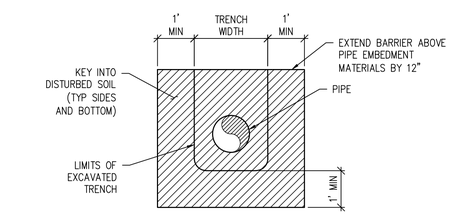

SECTION A

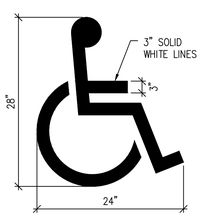

ACCESSIBLE SYMBOL DETAIL (6 C2.0)
NTS

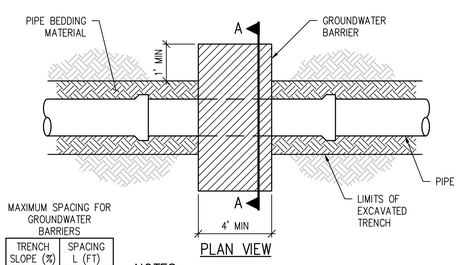

PLAN VIEW

MAXIMUM SPACING FOR GROUNDWATER BARRIERS

TRENCH SLOPE (%)	SPACING L (FT)
< 5	1,000
5 - 15	500
15 - 25	300
25 - 35	200
35 - 100	100
> 100	50

NOTES:
1. LOCATE GROUNDWATER BARRIERS PER ACCEPTED CONSTRUCTION DRAWINGS AND WATER AND SEWER DEPARTMENT CONSTRUCTION STANDARDS.
2. GROUNDWATER BARRIER TO BE CLAY OR OTHER DISTRICT APPROVED MATERIAL.

GROUNDWATER BARRIER DETAIL (7 C2.3)
NTS

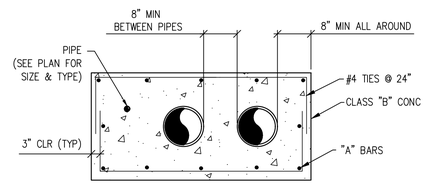

PIPE SIZE	"A" BARS
4" AND SMALLER PIPE	6-#4
5" TO 12" PIPE	12-#4
14" TO 36" PIPE	12-#5
42" AND LARGER PIPE	16-#5

NOTE:
EXTEND HORIZONTAL REINF. A MINIMUM OF 12" INTO STRUCTURE.

CONCRETE ENCASEMENT DETAIL (8 C2.5)
NTS

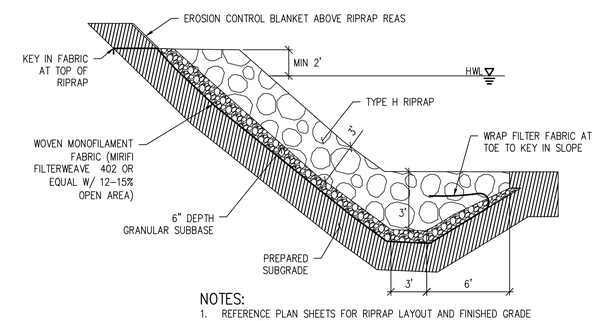

NOTES:
1. REFERENCE PLAN SHEETS FOR RIPRAP LAYOUT AND FINISHED GRADE ELEVATIONS
2. RIPRAP SHALL BE HAND OR MACHINE PLACED. DUMPING ALONG SLOPE IS NOT ACCEPTABLE

TYPE H RIPRAP SLOPE PROTECTION (9 C1.0)
NTS

EPC 7/12/2021

JVA, Inc. 1512 Larimer Street, Suite 710
Denver, CO 80202 303.444.1951
www.jvajva.com
Boulder • Fort Collins • Winter Park
Glenwood Springs • Denver

NO.	DATE	DES'D	DWN	REVISION DESCRIPTION

COLORADO LICENSED PROFESSIONAL ENGINEER 41654 7/1/2021

DESIGNED BY:	RAH/MHT
DRAWN BY:	MHT
CHECKED BY:	JJM
JOB #:	1051.6e
DATE:	JULY 2021

WOODMOOR WSD NO.1
LAKE PUMP STATION NO. 2 AND PIPELINE
EL PASO COUNTY, COLORADO

CIVIL DETAILS

SHEET NO.
CD1.2

N:\1051.6e\Drawings\1051.6e - Site Development Plan - CD10.dwg, 7/01/2021 - 2:32 PM, kji

WOODMOOR
Water & Sanitation District No. 1
P. O. Box 1407 • Monument, Colorado 80132
Phone (719) 488-2525 • Fax (719) 488-2530

Jennifer Irvine
El Paso County Department of Transportation
3275 Akers Drive
Colorado Springs, CO 80922

Re: Payment of Permit Fees & Restoration of Usefulness

Dear Ms. Irvine:

The Woodmoor Water and Sanitation District is in receipt of comments from El Paso County Planning and community development regarding a planned road cut for the establishment of a raw water transmission line in Woodmoor Drive.

General counsel for the District has advised us that under Colorado law, the District has express legislative authority to perform road cuts. §32-1-1006(1)(c)(I), C.R.S. Where the District restores a location to its former state of usefulness, the District is not required to pay any fees to the County. §32-1-1006(1)(c)(II), C.R.S.

Based on this advice, the District has taken the position that the District has no legal obligation to pay permit fees nor perform restoration beyond that which is necessary to restore the location to its former state of usefulness.

Very truly yours,

WOODMOOR WATER & SANITATION DISTRICT

Jessie J. Shaffer

Jessie J. Shaffer
District Manager

cc: El Paso County Planning & Community Development
Members of the District Board of Directors