MERIDIAN STORAGE, LLC

MERIDIAN STORAGE

FALCON RANCHETTES FILING NO. 1A, NORTH HALF OF THE SOUTHEAST QUARTER OF SECTION 1 TOWNSHIP 13 SOUTH, RANGE 65 WEST OF THE 6TH P.M., COUNTY OF EL PASO STATE OF COLORADO, MERIDIAN ROAD & OWL PLACE

SITE DEVELOPMENT PLAN

PPR2336

PROJECT CONTACTS

PROPERTY OWNER
MIKE D TEXER
11750 OWL PLACE
PEYTON, CO 80831
TELE: (719) 641-9261
CONTACT: MIKE D TEXER
EMAIL: MIKE.TEXER@GMAIL.COM

APPLICANT
GALLOWAY & CO., INC.
1155 KELLY JOHNSON BLVD., SUITE 305
COLORADO SPRINGS, CO 80920
TELE: (719) 900-7220
CONTACT: CALEB JOHNSON
EMAIL: CALEBJOHNSON@GALLOWAYUS.COM

CIVIL ENGINEER
GALLOWAY & CO., INC.
1155 KELLY JOHNSON BLVD., SUITE 305
COLORADO SPRINGS, CO 80920
TELE: (719) 900-7220
CONTACT: BRADY SHYROCK, P.E.
EMAIL: BRADYSHYROCK@GALLOWAYUS.COM

LANDSCAPE ARCHITECT
GALLOWAY & CO., INC.
1155 KELLY JOHNSON BLVD., SUITE 305
COLORADO SPRINGS, CO 80920
TELE: (719) 900-7220
CONTACT: JON ROMERO. PLA
EMAIL: JONROMERO@GALLOWAYUS.COM

SURVEYOR
GALLOWAY & CO., INC.
1155 KELLY JOHNSON BLVD., SUITE 305
COLORADO SPRINGS, CO 80920
TELE: (719) 900-7220
CONTACT: BILL BROOKS
EMAIL: BILLBROOKS@GALLOWAYUS.COM

CITY & UTILITY CONTACTS

WATER
WOODMEN HILLS METRO DISTRICT
8046 EASTONVILLE ROAD
FALCON, CO 80831
TELE: (719) 495-2500
CONTACT: CODY RITTER
EMAIL: CODY@WHMD.ORG

WASTEWATER
WOODMEN HILLS METRO DISTRICT
8046 EASTONVILLE ROAD
FALCON, CO 80831
TELE: (719) 495-2500
CONTACT: CODY RITTER
EMAIL: CODY@WHMD.ORG

ELECTRIC
MOUNTAIN VIEW ELECTRIC ASSOCIATION
11140 E. WOODMEN RD.,
FALCON, CO 80831
TELE: (800) 388-9881
CONTACT: GINA PERRY
EMAIL: GINA.P@MVEA.COOP

NATURAL GAS
COLORADO SPRINGS UTILITIES
7710 DURANT DRIVE, P.O. BOX 1103, MAIL CODE 2150
COLORADO SPRINGS, CO 80947-2150
(719) 668-5573
CONTACT: AARON CASSIO
EMAIL: ACASSIO@CSU.ORG

FIRE
FALCON FIRE PROTECTION DISTRICT
7030 OLD MERIDIAN RD.,
FALCON, CO 80831
TELE: (719) 495-4050
CONTACT: TRENT HARWIG
EMAIL: THARWIG@FALCONFIREPD.ORG

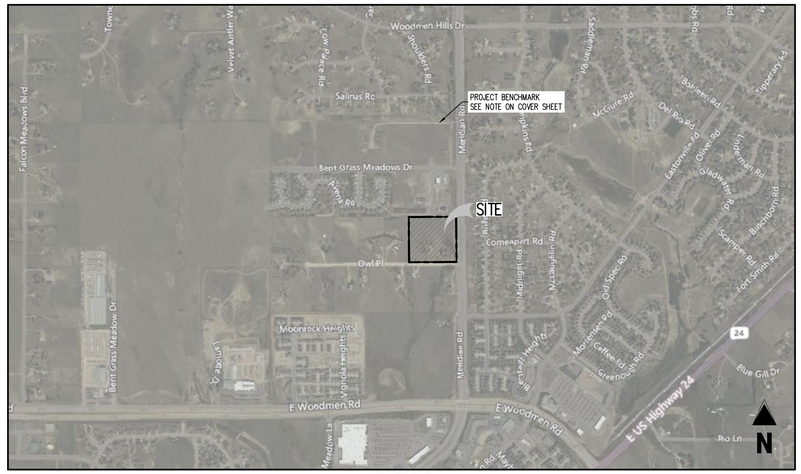

VICINITY MAP
0 200 500 1000
SCALE: 1"=1000'

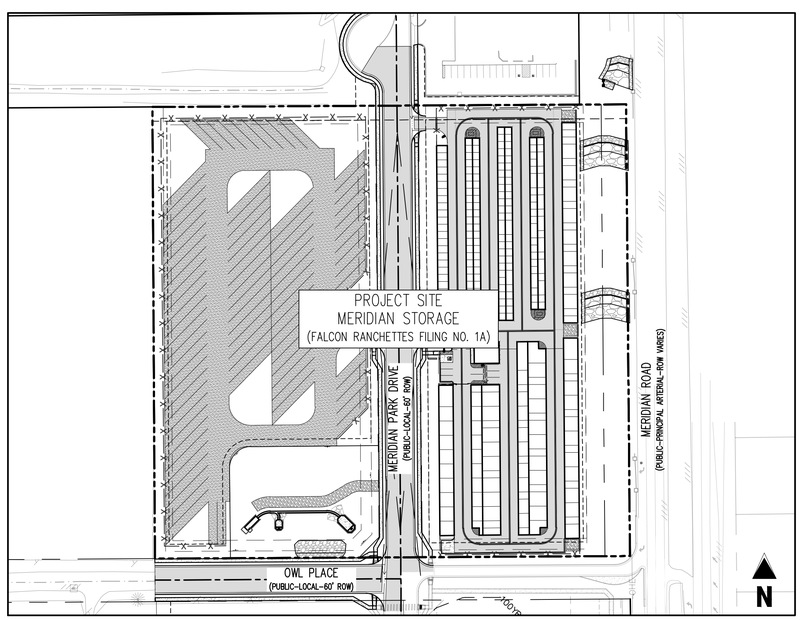

SITE MAP
0 20 50 100
SCALE: 1"=100'

SHEET INDEX		
SHEET NUMBER	SHEET DESCRIPTION	SHEET TITLE
1	C0.0	COVER SHEET
2	C1.1	SITE PLAN
3	C2.1	SITE DETAILS

LEGAL DESCRIPTION
A PARCEL OF LAND IN THE SOUTHEAST QUARTER OF SECTION 1, TOWNSHIP 13 SOUTH, RANGE 65 WEST, OF THE SIXTH PRINCIPAL MERIDIAN, COUNTY OF EL PASO, STATE OF COLORADO, MORE PARTICULARLY DESCRIBED AS FOLLOWS:

LOTS 1 & 2, FALCON RANCHETTES, ACCORDING TO THE PLAT THEREOF RECORDED IN PLAT BOOK V-2, PAGE 15, OF THE RECORDS OF EL PASO COUNTY, COLORADO.

CONTAINING 9.604 ACRES, MORE OR LESS.

BENCHMARK
THE SOUTHWEST CORNER OF LOT 1 WOODMEN HILLS FILING NO. 4,
MONUMENTED BY A NO. 4 REBAR WITH A YELLOW PLASTIC CAP
STAMPED "PLS 24964"
NAVD88 ELEVATION = 6947.67

BASIS OF BEARING
ALL BEARINGS ARE GRID BEARINGS OF THE COLORADO STATE PLANE COORDINATE SYSTEM, CENTRAL ZONE, NORTH AMERICAN DATUM 1983. BEARINGS ARE BASED ON THE SOUTH LINE OF LOTS 2, 3, & 4 OF FALCON RANCHETTES, AND IS CONSIDERED TO BEAR S89°40'45"W. DEFINED BY FOUND MONUMENTS AS FOLLOWS: A NO. 4 REBAR WITH A 1-1/4" YELLOW PLASTIC CAP STAMPED "LS 2372", BEING THE SOUTHEAST CORNER OF LOT 2; AND A NO. 4 REBAR WITH A 1-1/4" YELLOW PLASTIC CAP STAMPED "LS 2372", BEING THE SOUTHWEST CORNER OF LOT 4.

PROJECT DESCRIPTION:
THE PROPOSED SELF-STORAGE FACILITY WILL PROVIDE SELF-STORAGE UNITS FOR RENT ON AN AS-NEEDED BASIS TO CUSTOMERS IN COLORADO SPRINGS AND EL PASO COUNTY. THE FACILITY WILL HAVE APPROXIMATELY 362 SELF-STORAGE UNITS OF VARIOUS SIZES. ONE EMPLOYEE WILL BE REQUIRED TO OPERATE THE FACILITY AND THE HOURS OF OPERATION WILL BE LIMITED TO BETWEEN 6:00AM AND 11:00PM DAILY.

GENERAL NOTES:
1. SIGNAGE IS NOT APPROVED PER THIS PLAN. A SEPARATE SIGN APPLICATION SUBMITTED AND REVIEWED THROUGH EDARP IS REQUIRED..
2. THE MINERAL ESTATE OWNER NOTIFICATION CERTIFICATION AFFIDAVIT WAS SUBMITTED AND CAN BE FOUND IN FILE VR239. THE APPLICANT (OR PROPERTY OWNER) HAS ATTESTED THERE ARE NO SEPARATE MINERAL ESTATE OWNER(S) IDENTIFIED AND NO FURTHER ACTION WAS TAKEN.
3. ACCESSIBLE ROUTES, INCLUDING RAMPS AND SIDEWALKS, WITHIN THE PUBLIC RIGHT-OF-WAY SHALL BE PER EL PASO COUNTY'S STANDARD DRAWINGS AND SPECIFICATIONS. EL PASO COUNTY'S INSPECTOR WILL HAVE THE FINAL AUTHORITY ON ACCEPTING THE PUBLIC IMPROVEMENTS.
4. THE OWNER AGREES ON BEHALF OF HIM/HERSELF AND ANY DEVELOPER OR BUILDER SUCCESSORS AND ASSIGNEES THAT SUBDIVIDER AND/OR SAID SUCCESSORS AND ASSIGNS SHALL BE REQUIRED TO PAY TRAFFIC IMPACT FEES IN ACCORDANCE WITH THE EL PASO COUNTY ROAD IMPACT FEE PROGRAM RESOLUTION (RESOLUTION NO. 19-471), OR ANY AMENDMENTS THERETO, AT OR PRIOR TO THE TIME OF BUILDING PERMIT SUBMITTALS. THE FEE OBLIGATION, IF NOT PAID AT FINAL PLAT RECORDING, SHALL BE DOCUMENTED ON ALL SALES DOCUMENTS AND ON PLAT NOTES TO ENSURE THAT A TITLE SEARCH WOULD FIND THE FEE OBLIGATION BEFORE SALE OF THE PROPERTY.
5. THE PARTIES RESPONSIBLE FOR THIS PLAN HAVE FAMILIARIZED THEMSELVES WITH ALL CURRENT ACCESSIBILITY CRITERIA AND SPECIFICATIONS AND THE PROPOSED PLAN REFLECTS ALL SITE ELEMENTS REQUIRED BY THE APPLICABLE ADA DESIGN STANDARDS AND GUIDELINES AS PUBLISHED BY THE UNITED STATES DEPARTMENT OF JUSTICE. APPROVAL OF THIS PLAN BY EL PASO COUNTY DOES NOT ASSURE COMPLIANCE WITH THE ADA OR ANY REGULATIONS OR GUIDELINES ENACTED OR PROMULGATED UNDER OR WITH RESPECT TO SUCH LAWS.

SUMMARY TABLE

OWNER NAME, CONTACT TELEPHONE NUMBER, AND EMAIL FOR RESPONSIBLE PARTY	SEE PROJECT CONTACTS, THIS SHEET, UPPER LEFT CORNER	
APPLICANT NAME (IF NOT OWNER), CONTRACT TELEPHONE NUMBER, AND EMAIL FOR RESPONSIBLE PARTY	SEE PROJECT CONTACTS, THIS SHEET, UPPER LEFT CORNER	
PROPERTY ADDRESS	LOT 1A:	7945 MERIDIAN PARK DRIVE
	LOT 2A:	7940 MERIDIAN PARK DRIVE
PROPERTY TAX SCHEDULE NUMBER	LOT 1A:	5301001001 (SUBJECT TO CHANGE AFTER PLAT RECORDING)
	LOT 2A:	5301001002 (SUBJECT TO CHANGE AFTER PLAT RECORDING)
CURRENT ZONING OF THE PROPERTY	CS	
LEGAL DESCRIPTION	LOT 1A, LOT 2A, FALCON RANCHETTES FILING NO. 1A	
LOT/PARCEL SIZE	LOT 1A:	3.698 ACRES
	LOT 2A:	3.788 ACRES
LOT AREA COVERAGE CALCULATION	LOT 1A:	33.4%
	LOT 2A:	NOT APPLICABLE
EXISTING/PROPOSED LAND USE AND ZONING	LOT 1A:	CS, SELF STORAGE
	LOT 2A:	CS, RV STORAGE
TOTAL GROSS BUILDING SQUARE FOOTAGE	LOT 1A:	53,800 SF
	LOT 2A:	NOT APPLICABLE
OPEN SPACE, LANDSCAPING, AND IMPERMEABLE SURFACE PERCENTAGE	OPEN SPACE AND LANDSCAPING:	2.215 ACRES
	IMPERMEABLE SURFACE:	7.389 ACRES
REQUIRED NOTE PER EL PASO COUNTY SITE DEVELOPMENT PLAN CHECKLIST	SEE NOTE 6 UNDER "GENERAL NOTES", THIS SHEET	
PARKING COMPUTATIONS (REQUIRED, PROVIDED, ETC.)	SEE PARKING PLAN	

Annotate the number of RV parking stalls by # and sqft
RV Storage is assessed as Mini Storage for EPC Road Impact fees and is calculated based on the number and sqft size of the parking stalls.

PLANNING AND COMMUNITY DEVELOPMENT DIRECTOR:

MEGGAN HERINGTON
EXECUTIVE DIRECTOR

DATE

Galloway
1155 Kelly Johnson Blvd., Suite 305
Colorado Springs, CO 80920
719.900.7220
GallowayUS.com

PRELIMINARY
NOT FOR BIDDING
NOT FOR CONSTRUCTION

COPYRIGHT
THESE PLANS ARE AN INSTRUMENT OF SERVICE AND ARE THE PROPERTY OF GALLOWAY, AND MAY NOT BE DUPLICATED, DISCLOSED, OR REPRODUCED WITHOUT THE WRITTEN CONSENT OF GALLOWAY. COPYRIGHTS AND INFRINGEMENTS WILL BE ENFORCED AND PROSECUTED.

SITE DEVELOPMENT PLAN
MERIDIAN STORAGE
MERIDIAN STORAGE, LLC
PPR2336

STATE OF COLORADO, MERIDIAN ROAD & OWL PLACE
EL PASO COUNTY, FALCON, CO 80931

#	Date	Issue / Description	Init.

Project No:	MRS01
Drawn By:	ASA, BLB
Checked By:	BAS, CMWJ
Date:	05/06/2024

COVER SHEET

PPR2336

C0.0
Sheet 1 of 3

H:\Meridian Storage LLC\01 El Paso County - MRS01 - Storage\PLANS\Plans\SDP\MRS01_SP_C0.dwg, Caleb Johnson, 5/6/2024

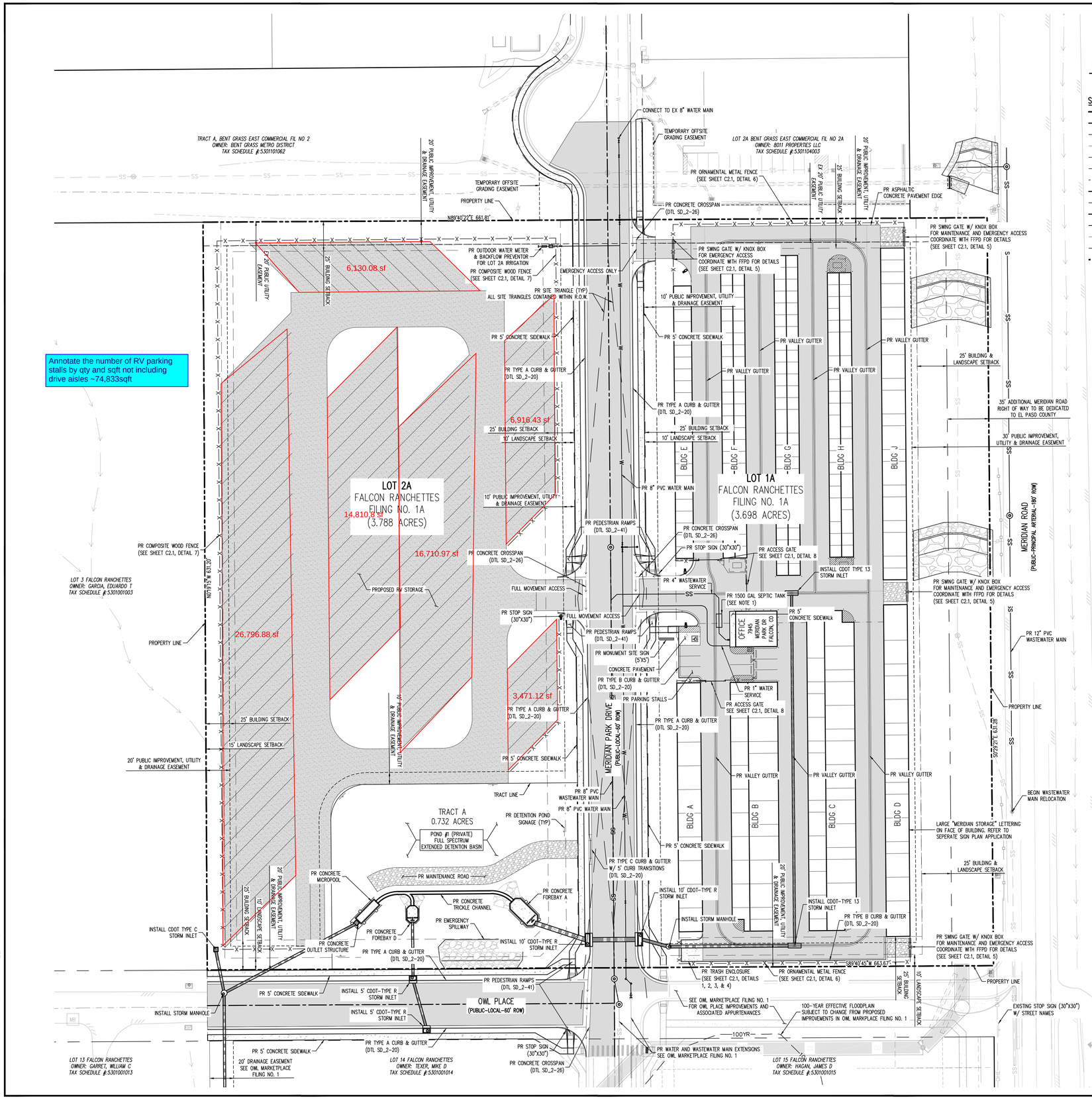

Annotate the number of RV parking stalls by qty and sqft not including drive aisles ~74,833sqft

Please depict :

-traffic circulation of the properties

SITE LEGEND

- PROJECT BOUNDARY LINE
- ADJACENT PROPERTY BOUNDARY LINE
- RIGHT OF WAY LINE
- EXISTING ADJACENT LOT LINE
- PROPOSED LOT LINE
- EXISTING EASEMENT LINE
- PROPOSED EASEMENT LINE
- PROPOSED ROAD CENTERLINE
- EXISTING ROAD CENTERLINE
- PROPOSED RIDGE LINE
- PROPOSED SWALE LINE
- EXISTING SWALE LINE
- 100YR FLOODPLAIN BOUNDARY
- PROPOSED ADA ROUTE
- 31 PARKING STALL COUNT
- EXISTING FENCE
- PROPOSED FENCE
- EXISTING GUARDRAIL
- PROPOSED CURB AND GUTTER
- EXISTING CURB AND GUTTER
- EXISTING EDGE OF ASPHALT
- PROPOSED SIDEWALK
- PROPOSED TRAIL
- PROPOSED GRAVEL PER ECM TABLE D-7
- RIPRAP OUTFALL PADS
- 12" CLASS 6 AGGREGATE BASE COURSE OR CRUSHED FINES OVER COMPACTED SUBGRADE
- EXISTING SIGN
- PROPOSED SIGN
- PROPOSED BOLLARDS

PAVING LEGEND

- PROPOSED CONCRETE
- EXISTING CONCRETE/ASPHALT PAVING
- PROPOSED ASPHALT PAVING

UTILITY LEGEND

- EXISTING WATER LINE
- PROPOSED WATER LINE
- EXISTING SANITARY SEWER
- PROPOSED SANITARY SEWER
- EXISTING STORM SEWER
- PROPOSED STORM SEWER
- EXISTING GAS LINE
- PROPOSED GAS LINE
- EXISTING UNDERGROUND TELEPHONE
- EXISTING OVERHEAD ELECTRIC
- EXISTING FIBER OPTIC LINE
- EXISTING FIBER OPTIC STRUCTURES
- EXISTING TELEPHONE PEDESTAL
- EXISTING ELECTRIC TRANSFORMER
- EXISTING POWER POLE
- EXISTING STREET LIGHT
- PROPOSED STREET LIGHT
- PROPOSED WATER METER
- EXISTING WATER VALVE
- PROPOSED WATER VALVE
- EXISTING FIRE HYDRANT
- PROPOSED FIRE HYDRANT
- EXISTING STORM SEWER MANHOLE
- PROPOSED STORM SEWER MANHOLE
- EXISTING SANITARY SEWER MANHOLE
- PROPOSED SANITARY SEWER MANHOLE

NOTES

1. 1500 GALLON SEPTIC TANK TO BE INSTALLED ONLY IF THE DEVELOPMENT TO THE SOUTH (KOWN AS OWL MARKETPLACE) IS NOT YET COMPLETED. ONCE THE DOWNSTREAM WASTEWATER INFRASTRUCTURE IN MERIDIAN PARK DRIVE IS COMPLETED, THE SEPTIC TANK WILL BE REMOVED AND/OR BYPASSED.
2. NO PROPOSED IMPROVEMENTS ARE LOCATED WITHIN FLOODPLAIN OR NO BUILD AREAS.
3. SELF STORAGE BUILDINGS F AND H ARE ALL CLIMATE CONTROLLED UNITS.
4. REFER TO PARKING PLAN FOR THE LAYOUT AND LOCATION OF ALL OFF-STREET PARKING AND ASSOCIATED VEHICULAR USE AREAS.
5. REFER TO MERIDIAN STORAGE LANDSCAPE PLAN FOR ALL LANDSCAPING LAYOUT AND DETAILS.

CAUTION – NOTICE TO CONTRACTOR

1. ALL UTILITY LOCATIONS SHOWN ARE BASED ON MAPS PROVIDED BY THE APPROPRIATE UTILITY COMPANY AND FIELD SURFACE EVIDENCE AT THE TIME OF SURVEY AND IS TO BE CONSIDERED AN APPROXIMATE LOCATION ONLY. IT IS THE CONTRACTOR'S RESPONSIBILITY TO FIELD VERIFY THE LOCATION OF ALL UTILITIES, PUBLIC OR PRIVATE, WHETHER SHOWN ON THE PLANS OR NOT, PRIOR TO CONSTRUCTION. REPORT ANY DISCREPANCIESTO THE ENGINEER PRIOR TO CONSTRUCTION.
2. WHERE A PROPOSED UTILITY CROSSES AN EXISTING UTILITY, IT IS THE CONTRACTOR'S RESPONSIBILITY TO FIELD VERIFY THE HORIZONTAL AND VERTICAL LOCATION OF SUCH EXISTING UTILITY, EITHER THROUGH POTHOLING OR ALTERNATIVE METHOD. REPORT INFORMATION TO THE ENGINEER PRIOR TO CONSTRUCTION.

811 Know what's below. Call before you dig.

Galloway
1155 Kelly Johnson Blvd., Suite 305
Colorado Springs, CO 80920
719.900.7220
GallowayUS.com

PRELIMINARY
NOT FOR BIDDING
NOT FOR CONSTRUCTION

COPYRIGHT
THESE PLANS ARE AN INSTRUMENT OF SERVICE AND ARE THE PROPERTY OF GALLOWAY, AND MAY NOT BE DUPLICATED, DISCLOSED, OR REPRODUCED WITHOUT THE WRITTEN CONSENT OF GALLOWAY. COPYRIGHTS AND INFRINGEMENTS WILL BE ENFORCED AND PROSECUTED.

Remove.

SITE DEVELOPMENT PLAN
MERIDIAN STORAGE
MERIDIAN STORAGE, LLC
PPR2336

STATE OF COLORADO, MERIDIAN ROAD & OWL PLACE
EL PASO COUNTY, FALCON, CO 80931

#	Date	Issue / Description	Init.

Project No:	MRS01
Drawn By:	ASA, BLB
Checked By:	BAS, CMWJ
Date:	05/06/2024

SITE PLAN

PPR2336

C1.1

Sheet 2 of 3

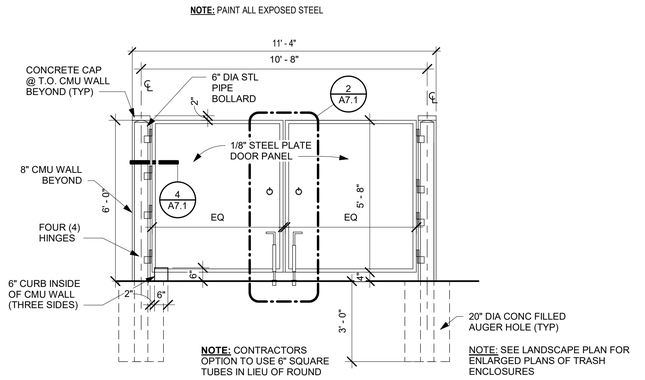

1 TRASH ENCLOSURE GATE ELEVATION
NOT TO SCALE

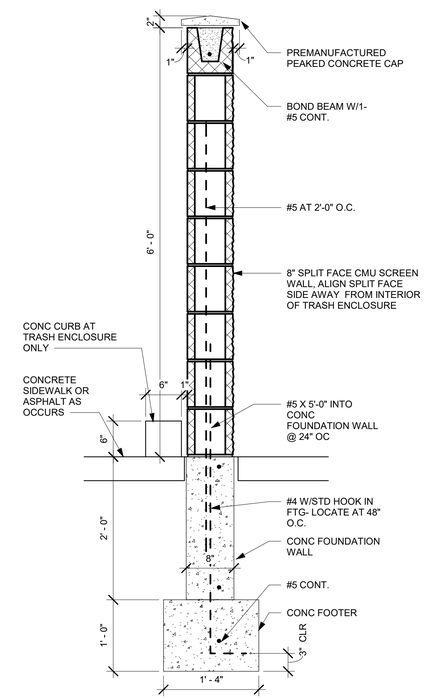

2 TRASH ENCLOSURE SECTION DETAIL
NOT TO SCALE

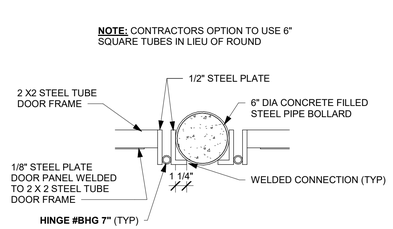

3 HINGE PLAN DETAIL
NOT TO SCALE

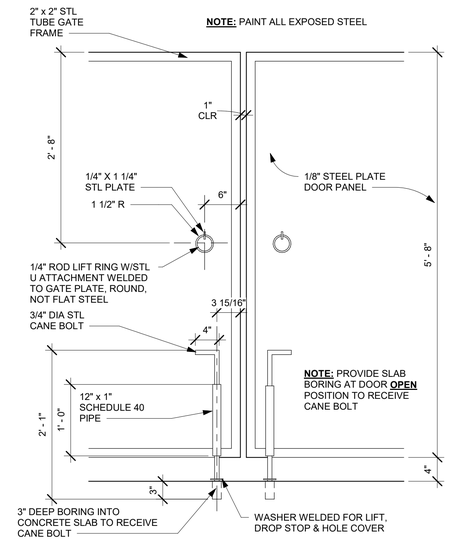

4 TRASH ENCLOSURE ENLARGED ELEVATION
NOT TO SCALE

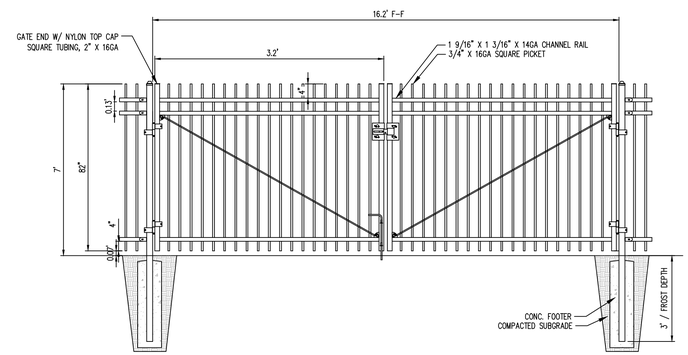

5 SWING GATE
NOT TO SCALE

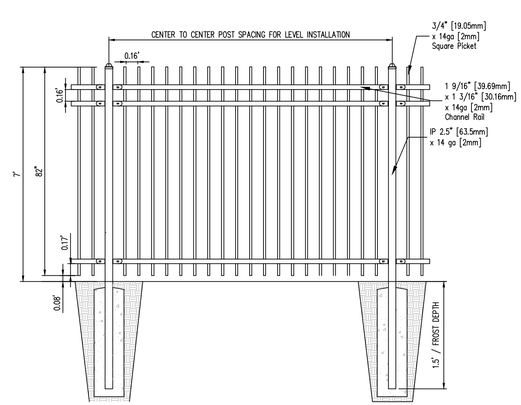

6 ORNAMENTAL METAL FENCE
NOT TO SCALE

PRIVACYLINK®
P.O. BOX 295
HYDE PARK, UT 84318
TOLL FREE: 1- 800-574-1076
PHONE: (435) 563-1058
FAX: (435) 563-1062
www.eprivacylink.com

☑ SELECT DESIRED COLOR:
- ☐ SADDLE
- ☐ WINCHESTER GRAY
- ☐ WOODLAND BROWN

☑ SELECT DESIRED POST CAP:
- ☐ PYRAMID CAP
- ☐ FLAT CAP

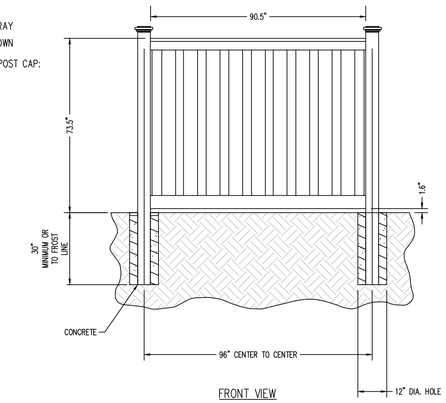

FRONT VIEW

NOTES:
1. INSTALLATION TO BE COMPLETED IN ACCORDANCE WITH MANUFACTURER'S SPECIFICATIONS.
2. DO NOT SCALE DRAWING.
3. THIS DRAWING IS INTENDED FOR USE BY ARCHITECTS, ENGINEERS, CONTRACTORS, CONSULTANTS AND DESIGN PROFESSIONALS FOR PLANNING PURPOSES ONLY. THIS DRAWING MAY NOT BE USED FOR CONSTRUCTION.
4. ALL INFORMATION CONTAINED HEREIN WAS CURRENT AT THE TIME OF DEVELOPMENT BUT MUST BE REVIEWED AND APPROVED BY THE PRODUCT MANUFACTURER TO BE CONSIDERED ACCURATE.
5. CONTRACTOR'S NOTE: FOR PRODUCT AND COMPANY INFORMATION VISIT www.CADdetails.com/info AND ENTER REFERENCE NUMBER MRS01_P_0

7 TREX® SECLUSIONS COMPOSITE FENCE
NOT TO SCALE

MRS01_P_ REVISION DATE 06/05/2024

PROTECTED BY COPYRIGHT ©2023 CADDETAILS.COM LTD. CADdetails.com

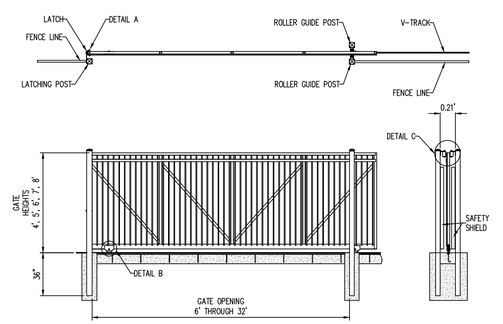

8 ROLLER GATE
NOT TO SCALE

Galloway
1155 Kelly Johnson Blvd., Suite 305
Colorado Springs, CO 80920
719.900.7220
GallowayUS.com

PRELIMINARY
NOT FOR BIDDING
NOT FOR CONSTRUCTION

COPYRIGHT
THESE PLANS ARE AN INSTRUMENT OF SERVICE AND ARE THE PROPERTY OF GALLOWAY, AND MAY NOT BE DUPLICATED, DISCLOSED, OR REPRODUCED WITHOUT THE WRITTEN CONSENT OF GALLOWAY. COPYRIGHTS AND INFRINGEMENTS WILL BE ENFORCED AND PROSECUTED.

SITE DEVELOPMENT PLAN
MERIDIAN STORAGE
MERIDIAN STORAGE, LLC
PPR2336

STATE OF COLORADO, MERIDIAN ROAD & OWL PLACE
EL PASO COUNTY, FALCON, CO 80931

#	Date	Issue / Description	Init.

Project No:	MRS01
Drawn By:	ASA, BLB
Checked By:	BAS, CMWJ
Date:	05/06/2024

SITE DETAILS

PPR2336

C2.1
Sheet 3 of 3