MERIDIAN STORAGE, LLC

MERIDIAN STORAGE

FALCON RANCHETTES FILING NO. 1A, NORTH HALF OF THE SOUTHEAST QUARTER OF SECTION 1 TOWNSHIP 13 SOUTH, RANGE 65 WEST OF THE 6TH P.M., COUNTY OF EL PASO STATE OF COLORADO, MERIDIAN ROAD & OWL PLACE

GALLOWAY RESPONSE

PARKING LOT PLAN

ADDED EPC FILING NUMBER

PPR2336

PPR23XX

PROJECT CONTACTS

PROPERTY OWNER
MIKE D TEXER
11750 OWL PLACE
PEYTON, CO 80831
TELE: (719) 641-9261
CONTACT: MIKE D TEXER
EMAIL: MIKE.TEXER@GMAIL.COM

APPLICANT
GALLOWAY & CO., INC.
1155 KELLY JOHNSON BLVD., SUITE 305
COLORADO SPRINGS, CO 80920
TELE: (719) 900-7220
CONTACT: CALEB JOHNSON
EMAIL: CALEBJOHNSON@GALLOWAYUS.COM

CIVIL ENGINEER
GALLOWAY & CO., INC.
1155 KELLY JOHNSON BLVD., SUITE 305
COLORADO SPRINGS, CO 80920
TELE: (719) 900-7220
CONTACT: BRADY SHYROCK, P.E.
EMAIL: BRADYSHYROCK@GALLOWAYUS.COM

LANDSCAPE ARCHITECT
GALLOWAY & CO., INC.
1155 KELLY JOHNSON BLVD., SUITE 305
COLORADO SPRINGS, CO 80920
TELE: (719) 900-7220
CONTACT: JON ROMERO. PLA
EMAIL: JONROMERO@GALLOWAYUS.COM

SURVEYOR
GALLOWAY & CO., INC.
1155 KELLY JOHNSON BLVD., SUITE 305
COLORADO SPRINGS, CO 80920
TELE: (719) 900-7220
CONTACT: BILL BROOKS
EMAIL: BILLBROOKS@GALLOWAYUS.COM

CITY & UTILITY CONTACTS

WATER
WOODMEN HILLS METRO DISTRICT
8046 EASTONVILLE ROAD
FALCON, CO 80831
TELE: (719) 495-2500
CONTACT: CODY RITTER
EMAIL: CODY@WHMD.ORG

WASTEWATER
WOODMEN HILLS METRO DISTRICT
8046 EASTONVILLE ROAD
FALCON, CO 80831
TELE: (719) 495-2500
CONTACT: CODY RITTER
EMAIL: CODY@WHMD.ORG

ELECTRIC
MOUNTAIN VIEW ELECTRIC ASSOCIATION
11140 E. WOODMEN RD.,
FALCON, CO 80831
TELE: (800) 388-9881
CONTACT: GINA PERRY
EMAIL: GINA.P@MVEA.COOP

NATURAL GAS
COLORADO SPRINGS UTILITIES
7710 DURANT DRIVE, P.O. BOX 1103, MAIL CODE 2150
COLORADO SPRINGS, CO 80947-2150
(719) 668-5573
CONTACT: AARON CASSIO
EMAIL: ACASSIO@CSU.ORG

FIRE
FALCON FIRE PROTECTION DISTRICT
7030 OLD MERIDIAN RD.,
FALCON, CO 80831
TELE: (719) 495-4050
CONTACT: TRENT HARWIG
EMAIL: THARWIG@FALCONFIREPD.ORG

VICINITY MAP
0 200 500 1000
SCALE: 1"=1000'

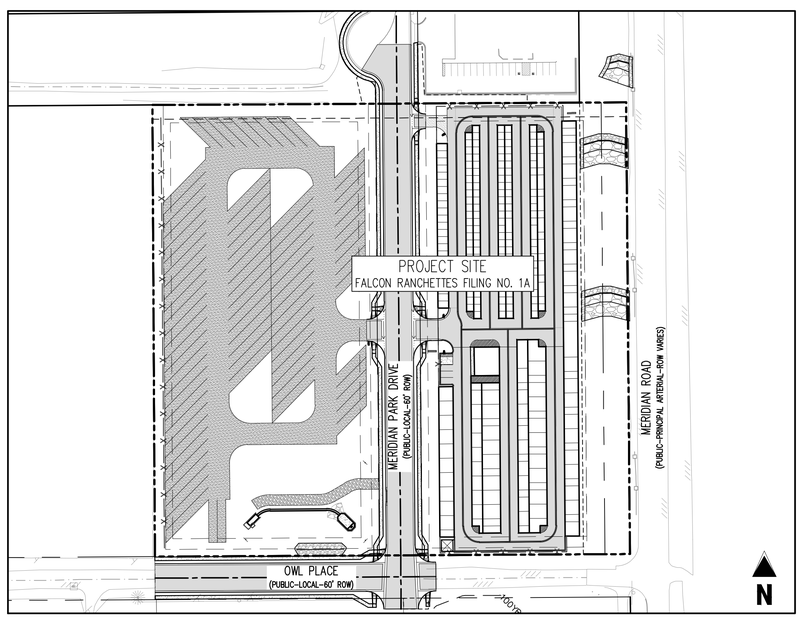

SITE MAP
0 20 50 100
SCALE: 1"=100'

SHEET LIST

SHEET NUMBER	SHEET TITLE	SHEET DESCRIPTION
1	COVER SHEET	P0.0
2	PARKING LOT PLAN	P1.1
3	PARKING DETAILS	P2.1
4	PARKING DETAILS	P2.2

PARKING TABLE

USE	PARKING RATIO	UNITS	PARKING REQUIRED	PARKING PROVIDED
MINI-STORAGE	1 / 100 UNITS	158	2	3
EMPLOYEE PARKING	1 / EMPLOYEE	1 (MAXIMUM PER SHIFT)	1	1
TOTAL			3	4
ADA (INCLUDED IN TOTAL COUNT)			1	1

since there are two uses on site, we will require parking to be matched for both:
mini storage: 1/100 units (253 total) + 1/employee = 4
vehicle storage: 3 spaces
1 ADA space
= 8 spaces

INCLUDED REQUIRED PARKING, ORIGINAL UNIT COUNT WAS INCORRECT, ALSO REVISED PARKING COUNTS TO REFLECT THIS

LEGAL DESCRIPTION
A PARCEL OF LAND IN THE SOUTHEAST QUARTER OF SECTION 1, TOWNSHIP 13 SOUTH, RANGE 65 WEST, OF THE SIXTH PRINCIPAL MERIDIAN, COUNTY OF EL PASO, STATE OF COLORADO, MORE PARTICULARLY DESCRIBED AS FOLLOWS:

LOTS 1 & 2, FALCON RANCHETTES, ACCORDING TO THE PLAT THEREOF RECORDED IN PLAT BOOK V-2, PAGE 15, OF THE RECORDS OF EL PASO COUNTY, COLORADO.

CONTAINING 9.604 ACRES, MORE OR LESS.

BENCHMARK
THE SOUTHWEST CORNER OF LOT 1 WOODMEN HILLS FILING NO. 4, MONUMENTED BY A NO. 4 REBAR WITH A YELLOW PLASTIC CAP STAMPED "PLS 24964"
NAVD88 ELEVATION = 6947.67

BASIS OF BEARING
ALL BEARINGS ARE GRID BEARINGS OF THE COLORADO STATE PLANE COORDINATE SYSTEM, CENTRAL ZONE, NORTH AMERICAN DATUM 1983. BEARINGS ARE BASED ON THE SOUTH LINE OF LOTS 2, 3, & 4 OF FALCON RANCHETTES, AND IS CONSIDERED TO BEAR S89°40'45"W. DEFINED BY FOUND MONUMENTS AS FOLLOWS: A NO. 4 REBAR WITH A 1-1/4" YELLOW PLASTIC CAP STAMPED "LS 2372", BEING THE SOUTHEAST CORNER OF LOT 2; AND A NO. 4 REBAR WITH A 1-1/4" YELLOW PLASTIC CAP STAMPED "LS 2372", BEING THE SOUTHWEST CORNER OF LOT 4.

CAUTION – NOTICE TO CONTRACTOR
1. ALL UTILITY LOCATIONS SHOWN ARE BASED ON MAPS PROVIDED BY THE APPROPRIATE UTILITY COMPANY AND FIELD SURFACE EVIDENCE AT THE TIME OF SURVEY AND IS TO BE CONSIDERED AN APPROXIMATE LOCATION ONLY. IT IS THE CONTRACTOR'S RESPONSIBILITY TO FIELD VERIFY THE LOCATION OF ALL UTILITIES, PUBLIC OR PRIVATE, WHETHER SHOWN ON THE PLANS OR NOT, PRIOR TO CONSTRUCTION. REPORT ANY DISCREPANCIESTO THE ENGINEER PRIOR TO CONSTRUCTION.

811 Know what's below. Call before you dig.

2. WHERE A PROPOSED UTILITY CROSSES AN EXISTING UTILITY, IT IS THE CONTRACTOR'S RESPONSIBILITY TO FIELD VERIFY THE HORIZONTAL AND VERTICAL LOCATION OF SUCH EXISTING UTILITY, EITHER THROUGH POTHOLING OR ALTERNATIVE METHOD. REPORT INFORMATION TO THE ENGINEER PRIOR TO CONSTRUCTION.

PROJECT DESCRIPTION:
THE PROPOSED SELF-STORAGE FACILITY WILL PROVIDE SELF-STORAGE UNITS FOR RENT ON AN AS-NEEDED BASIS TO CUSTOMERS IN COLORADO SPRINGS AND EL PASO COUNTY. THE FACILITY WILL HAVE APPROXIMATELY 158 SELF-STORAGE UNITS OF VARIOUS SIZES. ONE EMPLOYEE WILL BE REQUIRED TO OPERATE THE FACILITY AND THE HOURS OF OPERATION WILL BE LIMITED TO BETWEEN 6:00AM AND 11:00PM DAILY.

GENERAL NOTES:
1. ALL SITE LIGHTING OR EXTERIOR LIGHTING FIXTURES SHALL BE FULL CUT-OFF OR SHIELDED TO PREVENT LIGHT SPILLAGE ONTO ADJACENT PROPERTIES AND ROADWAYS.
2. ALL "STOP SIGNS" WILL BE INSTALLED BY THE DEVELOPER AT THE LOCATIONS SHOWN ON THE DEVELOPMENT PLAN TO MEET MUTCD STANDARDS. CONTACT TRAFFIC ENGINEERING, SIGNS & MARKINGS AT 719-385-6720 FOR ASSISTANCE.
3. SIGNAGE IS NOT APPROVED PER THIS PLAN. A SEPARATE SIGN PERMIT IS REQUIRED. CONTACT THE DEVELOPMENT REVIEW ENTERPRISE AT 719-385-5982 TO BEGIN A SIGN PERMIT APPLICATION.
4. THE MINERAL ESTATE OWNER NOTIFICATION CERTIFICATION AFFIDAVIT WAS SUBMITTED AND CAN BE FOUND IN FILE CPC XX XX-00XXX. THE APPLICANT (OR PROPERTY OWNER) HAS ATTESTED THERE ARE NO SEPARATE MINERAL ESTATE OWNER(S) IDENTIFIED AND NO FURTHER ACTION WAS TAKEN.
5. ACCESSIBLE ROUTES, INCLUDING RAMPS AND SIDEWALKS, WITHIN THE PUBLIC RIGHT-OF-WAY SHALL BE PER EL PASO COUNTY'S STANDARD DRAWINGS AND SPECIFICATIONS. EL PASO COUNTY'S INSPECTOR WILL HAVE THE FINAL AUTHORITY ON ACCEPTING THE PUBLIC IMPROVEMENTS.

OWNER'S STATEMENT
I, THE OWNER/DEVELOPER HAVE READ AND WILL COMPLY WITH THE REQUIREMENTS OF THE DEVELOPMENT PLAN.

BRIAN DUNCAN
JOHNSON DEVELOPMENT ASSOCIATES, INC.
DATE

REMOVED

This can be removed

PLANNING AND COMMUNITY DEVELOPMENT DIRECTOR:

KEVIN MASTIN
INTERIM EXECUTIVE DIRECTOR
DATE

COUNTY FILE NUM
PPR2336

ADDED EPC FILING NUMBER

Galloway
1155 Kelly Johnson Blvd., Suite 305
Colorado Springs, CO 80920
719.900.7220
GallowayUS.com

COPYRIGHT
THESE PLANS ARE AN INSTRUMENT OF SERVICE AND ARE THE PROPERTY OF GALLOWAY, AND MAY NOT BE DUPLICATED, DISCLOSED, OR REPRODUCED WITHOUT THE WRITTEN CONSENT OF GALLOWAY. COPYRIGHTS AND INFRINGEMENTS WILL BE ENFORCED AND PROSECUTED.

PARKING LOT PLAN
MERIDIAN STORAGE
MERIDIAN STORAGE, LLC
PPR23XX

STATE OF COLORADO, MERIDIAN ROAD & OWL PLACE
EL PASO COUNTY, FALCON, CO 80931

#	Date	Issue / Description	Init.

Project No:	MRS01
Drawn By:	ASA
Checked By:	BAS
Date:	09/08/2023

COVER SHEET

P0.0
Sheet 1 of 4

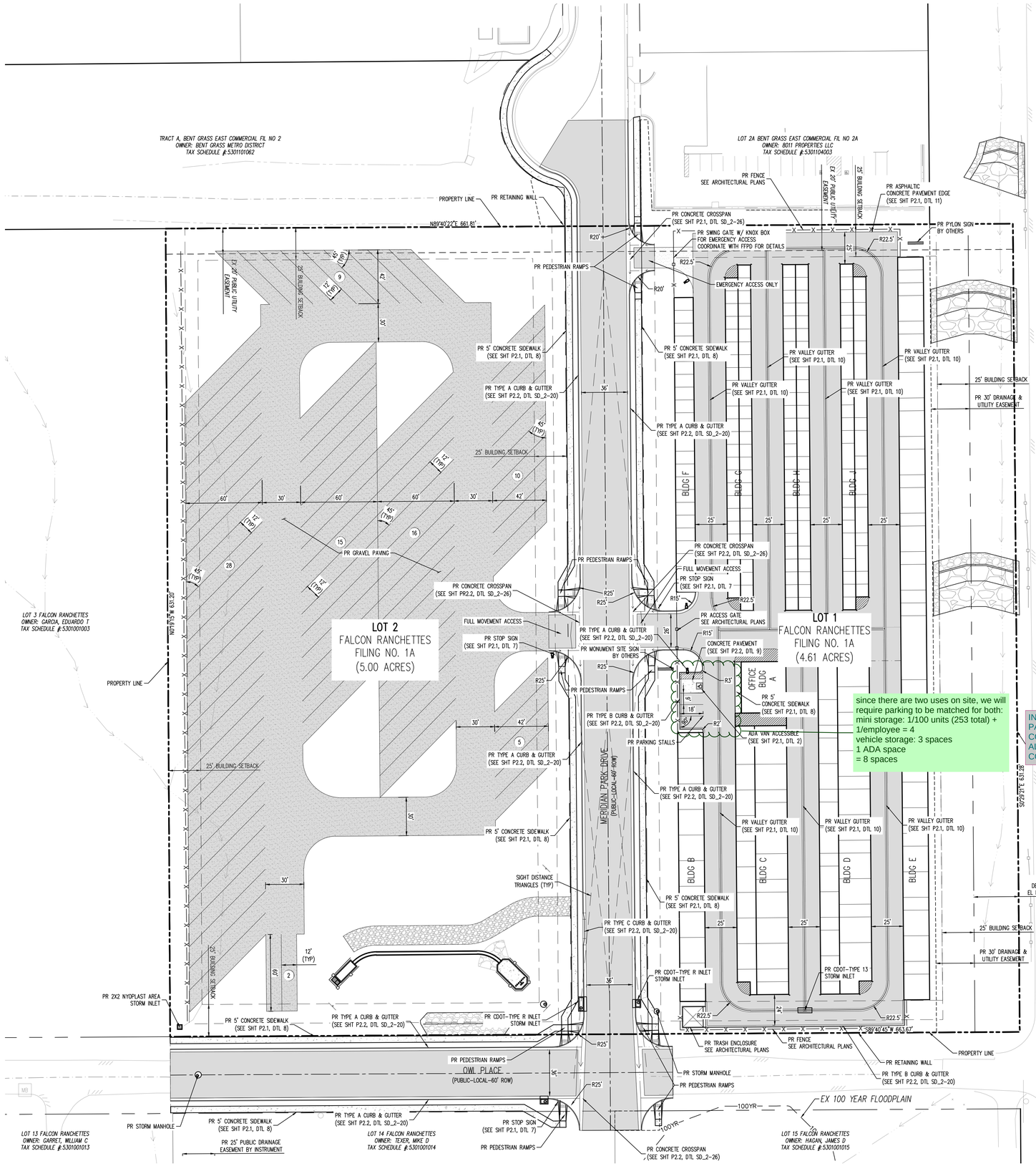

INCLUDED REQUIRED PARKING, ORIGINAL UNIT COUNT WAS INCORRECT, ALSO REVISED PARKING COUNTS TO REFLECT THIS

since there are two uses on site, we will require parking to be matched for both:
mini storage: 1/100 units (253 total) + 1/employee = 4
vehicle storage: 3 spaces
1 ADA space
= 8 spaces

N

0 20 40
SCALE: 1"=40'

SITE LEGEND

- PROJECT BOUNDARY LINE
- ADJACENT PROPERTY BOUNDARY LINE
- RIGHT OF WAY LINE
- EXISTING ADJACENT LOT LINE
- PROPOSED LOT LINE
- EXISTING EASEMENT LINE
- PROPOSED EASEMENT LINE
- PROPOSED ROAD CENTERLINE
- EXISTING ROAD CENTERLINE
- PROPOSED RIDGE LINE
- PROPOSED SWALE LINE
- EXISTING SWALE LINE
- 100YR FLOODPLAIN BOUNDARY
- 31 PARKING STALL COUNT
- EXISTING FENCE
- PROPOSED FENCE
- EXISTING GUARDRAIL
- PROPOSED CURB AND GUTTER
- EXISTING CURB AND GUTTER
- EXISTING EDGE OF ASPHALT
- PROPOSED SIDEWALK
- PROPOSED TRAIL
- PROPOSED GRAVEL PER ECM TABLE D-7
- RIPRAP OUTFALL PADS
- 12" CLASS 6 AGGREGATE BASE COURSE OR CRUSHED FINES OVER COMPACTED SUBGRADE
- EXISTING SIGN
- PROPOSED SIGN
- PROPOSED BOLLARDS

PAVING LEGEND

- PROPOSED CONCRETE
- EXISTING CONCRETE
- PROPOSED ASPHALT PAVING

UTILITY LEGEND

- EXISTING WATER LINE
- PROPOSED WATER LINE
- EXISTING SANITARY SEWER
- PROPOSED SANITARY SEWER
- EXISTING STORM SEWER
- PROPOSED STORM SEWER
- EXISTING GAS LINE
- PROPOSED GAS LINE
- EXISTING UNDERGROUND TELEPHONE
- EXISTING OVERHEAD ELECTRIC
- EXISTING FIBER OPTIC LINE
- EXISTING FIBER OPTIC STRUCTURES
- EXISTING TELEPHONE PEDESTAL
- EXISTING ELECTRIC TRANSFORMER
- EXISTING POWER POLE
- EXISTING STREET LIGHT
- PROPOSED STREET LIGHT
- PROPOSED WATER METER
- EXISTING WATER VALVE
- PROPOSED WATER VALVE
- EXISTING FIRE HYDRANT
- PROPOSED FIRE HYDRANT
- EXISTING STORM SEWER MANHOLE
- PROPOSED STORM SEWER MANHOLE
- EXISTING SANITARY SEWER MANHOLE
- PROPOSED SANITARY SEWER MANHOLE

CAUTION – NOTICE TO CONTRACTOR

1. ALL UTILITY LOCATIONS SHOWN ARE BASED ON MAPS PROVIDED BY THE APPROPRIATE UTILITY COMPANY AND FIELD SURFACE EVIDENCE AT THE TIME OF SURVEY AND IS TO BE CONSIDERED AN APPROXIMATE LOCATION ONLY. IT IS THE CONTRACTOR'S RESPONSIBILITY TO FIELD VERIFY THE LOCATION OF ALL UTILITIES, PUBLIC OR PRIVATE, WHETHER SHOWN ON THE PLANS OR NOT, PRIOR TO CONSTRUCTION. REPORT ANY DISCREPANCIESTO THE ENGINEER PRIOR TO CONSTRUCTION.
2. WHERE A PROPOSED UTILITY CROSSES AN EXISTING UTILITY, IT IS THE CONTRACTOR'S RESPONSIBILITY TO FIELD VERIFY THE HORIZONTAL AND VERTICAL LOCATION OF SUCH EXISTING UTILITY, EITHER THROUGH POTHOLING OR ALTERNATIVE METHOD. REPORT INFORMATION TO THE ENGINEER PRIOR TO CONSTRUCTION.

Know what's below. Call before you dig.

PLANNING AND COMMUNITY DEVELOPMENT DIRECTOR:

COUNTY FILE NUMBER:
PPR-23XX

Galloway
1155 Kelly Johnson Blvd., Suite 305
Colorado Springs, CO 80920
719.900.7220
GallowayUS.com

COPYRIGHT
THESE PLANS ARE AN INSTRUMENT OF SERVICE AND ARE THE PROPERTY OF GALLOWAY, AND MAY NOT BE DUPLICATED, DISCLOSED, OR REPRODUCED WITHOUT THE WRITTEN CONSENT OF GALLOWAY. COPYRIGHTS AND INFRINGEMENTS WILL BE ENFORCED AND PROSECUTED.

PARKING LOT PLAN
MERIDIAN STORAGE
MERIDIAN STORAGE, LLC
PPR23XX

STATE OF COLORADO, MERIDIAN ROAD & OWL PLACE
EL PASO COUNTY, FALCON, CO 80931

#	Date	Issue / Description	Init.

Project No:	MRS01
Drawn By:	ASA
Checked By:	BAS
Date:	09/08/2023

PARKING LOT PLAN

P1.1
Sheet 2 of 4

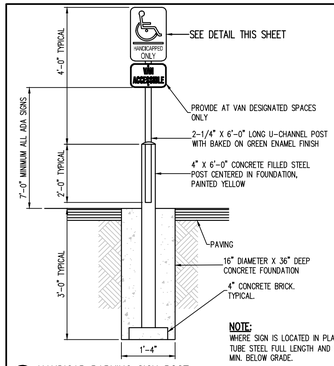

NOTE:
WHERE SIGN IS LOCATED IN PLANTER AREA, USE 2" x 2" TUBE STEEL FULL LENGTH AND SET IN CONCRETE 3'-0" MIN. BELOW GRADE.

1 HANDICAP PARKING SIGN POST
NOT TO SCALE

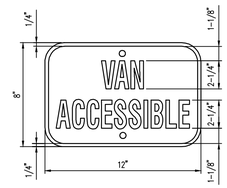

MATERIAL:
1. 0.060 ALUMINUM – BLUE BACKGROUND WITH WHITE COPY AND BORDER, 1-1/2" RADIUS CORNERS, WHITE, 2 MOUNTING HOLES.
2. SIGN USED WITH CORRESPONDING VAN SPACE.

2 "VAN ACCESSIBLE" SIGN
NOT TO SCALE

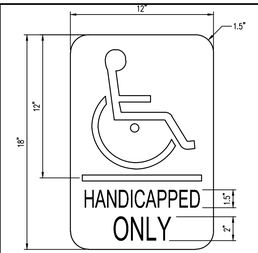

MATERIAL:
0.060 ALUMINUM – WHITE BACKGROUND WITH BLUE COPY AND BORDER – SYMBOL HAS BLUE BACKGROUND, WHITE COPY WITH BLACK BORDER 1-1/2" RADIUS CORNERS WHITE 2 MOUNTING HOLES.

3 HANDICAP PARKING SIGN
NOT TO SCALE

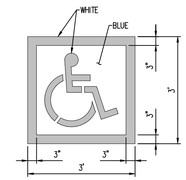

NOTES:
1. PROVIDE TWO COATS OF PAINT
2. BLUE BACKGROUND WITH WHITE SYMBOL

4 PAINTED ADA PARKING SYMBOL
NOT TO SCALE

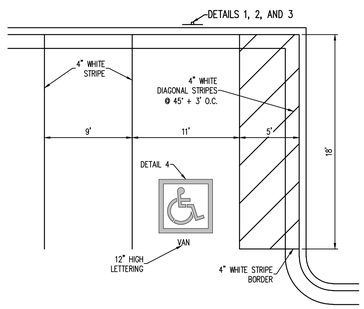

NOTE:
ALL STRIPING SHALL BE SHERWIN WILLIAMS TRAFFIC MARKING PAINT OR EQUIVALENT.

6 ADA VAN ACCESSIBLE PARKING DETAIL
NOT TO SCALE

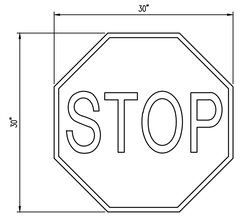

7 MUTCD R1-1 "STOP" SIGN DETAIL
NOT TO SCALE

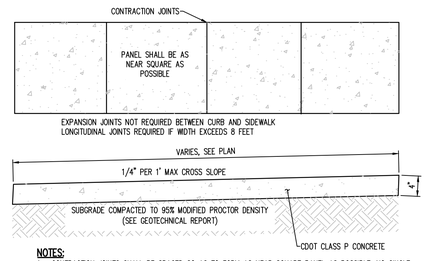

NOTES:
1. CONTRACTION JOINTS SHALL BE SPACED SO AS TO FORM AS NEAR SQUARE PANEL AS POSSIBLE. NO SINGLE PANEL SHALL EXCEED 8' ON ANY SIDE. CONTRACTION JOINTS SHALL BE 3/4" DEEP.
2. EXPANSION JOINTS OF 1/2" MASTIC MATERIAL SHALL BE PLACED AT P.C.'S AND P.T.'S OF CURVES, AT GRADE BREAKS, AT DRIVEWAYS, AND AT OTHER LOCATIONS AS SPECIFIED BY THE ENGINEER.
3. CONSTRUCTION MATERIALS AND PROCEDURES SHALL CONFORM TO EXISTING COUNTY AND STATE STANDARD SPECIFICATIONS.

8 CONCRETE SIDEWALK
NOT TO SCALE

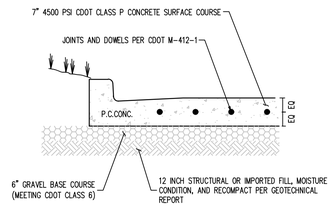

9 CONCRETE PAVEMENT SECTION
NOT TO SCALE

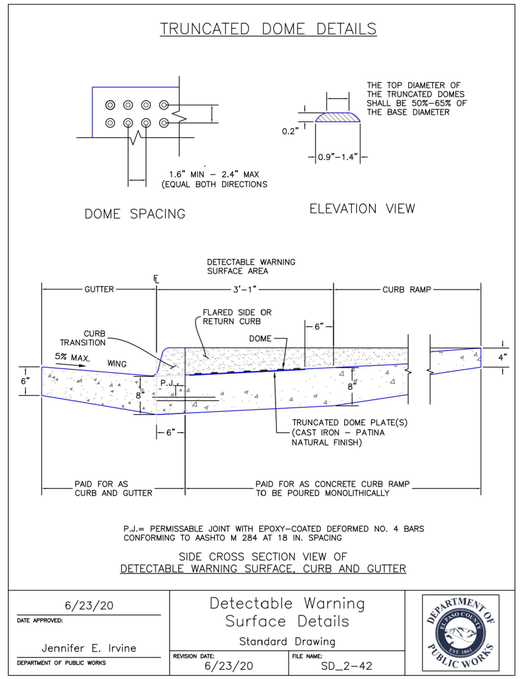

5 TRUNCATED DOMES
NOT TO SCALE

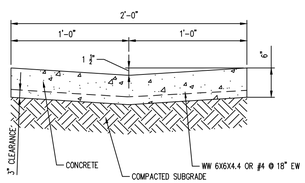

10 CONCRETE VALLEY GUTTER
NOT TO SCALE

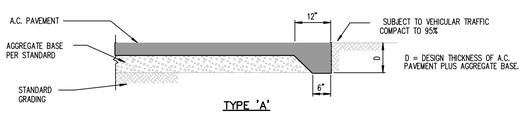

11 ASPHALT EDGE DETAIL
NOT TO SCALE

Galloway
1155 Kelly Johnson Blvd., Suite 305
Colorado Springs, CO 80920
719.900.7220
GallowayUS.com

COPYRIGHT
THESE PLANS ARE AN INSTRUMENT OF SERVICE AND ARE THE PROPERTY OF GALLOWAY, AND MAY NOT BE DUPLICATED, DISCLOSED, OR REPRODUCED WITHOUT THE WRITTEN CONSENT OF GALLOWAY. COPYRIGHTS AND INFRINGEMENTS WILL BE ENFORCED AND PROSECUTED.

CONSTRUCTION DRAWINGS
MERIDIAN STORAGE
MERIDIAN STORAGE, LLC
VR239

STATE OF COLORADO, MERIDIAN ROAD & OWL PLACE
EL PASO COUNTY, FALCON, CO 80931

#	Date	Issue / Description	Init.

Project No:	MRS01
Drawn By:	JDM
Checked By:	CMWJ
Date:	PUB

PARKING DETAILS

P2.1
Sheet 3 of 4

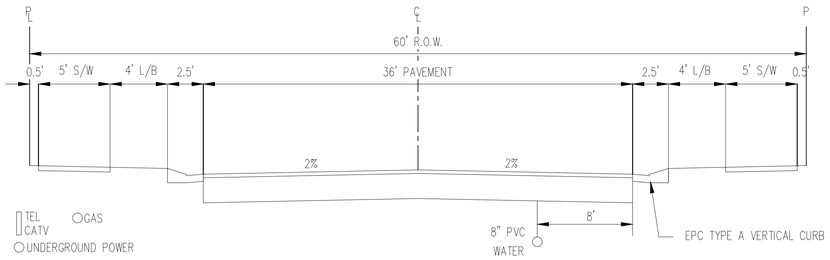

TYPICAL STREET SECTION – URBAN LOCAL ROADWAY
N.T.S. – 25 MPH DESIGN/POSTED SPEED

STREET NAMES

1. MERIDIAN PARK DRIVE
2. OWL PLACE

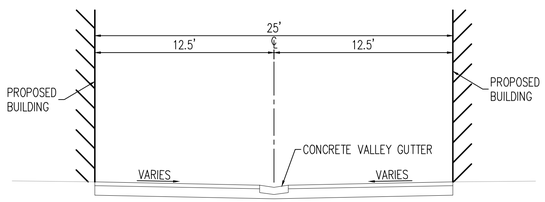

TYPICAL STREET SECTION – STORAGE UNIT DRIVE AISLE
N.T.S. – 10 MPH DESIGN/POSTED SPEED

TRUNCATED DOME DETAILS

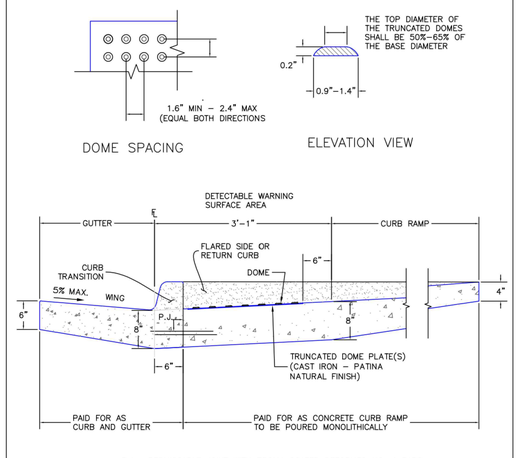

6/23/20 DATE APPROVED: Jennifer E. Irvine DEPARTMENT OF PUBLIC WORKS	Detectable Warning Surface Details Standard Drawing	REVISION DATE: 6/23/20 FILE NAME: SD_2–42

(5) TRUNCATED DOMES
NOT TO SCALE

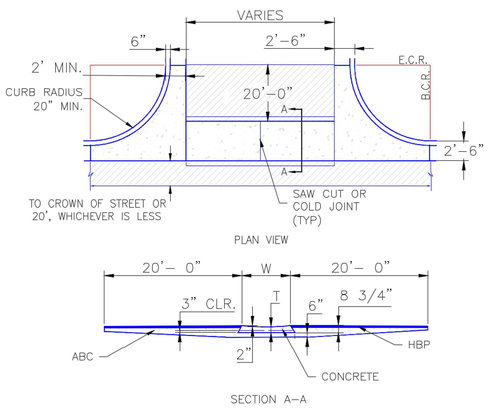

NOTES

1. W – WIDTH SHALL BE 6' FOR LOCAL, 8' FOR COLLECTORS, AND 10' FOR ARTERIAL ROADS.

2. T – SQUARED–OFF RETURN TO BE POURED MONOLITHICALLY, 8" PCC FOR LOCAL ROADS, 9" FOR COLLECTORS WITH 6x6 – 4.4 W.W.F. OR #4 REINFORCING BAR @ 18" EACH WAY.

3. = 3" MINIMUM ASPHALT DEPTH (2 LIFTS).

4. DESIGN TO SPECIFY ELEVATIONS AT PI AND PCR.

SCALE: NOT TO SCALE

8/11/11 DATE APPROVED: André P. Brackin DEPARTMENT OF TRANSPORTATION	Typical Cross Pan Layout Detail Standard Drawing	REVISION DATE: 12/8/15 FILE NAME: SD_2–26

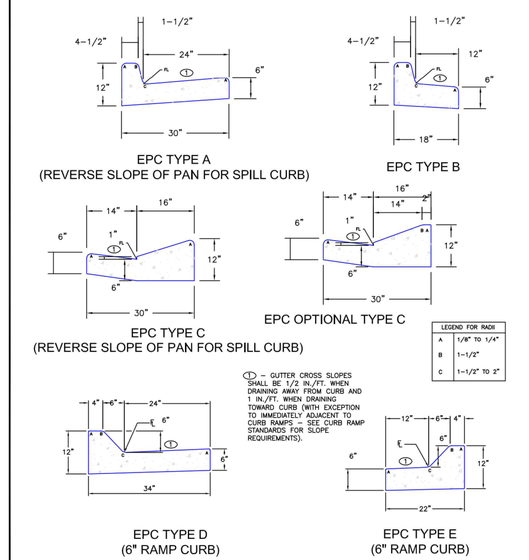

SCALE: NOT TO SCALE

6/23/20 DATE APPROVED: Jennifer E. Irvine DEPARTMENT OF PUBLIC WORKS	Typical Curb and Gutter Details Standard Drawing	REVISION DATE: 6/23/20 FILE NAME: SD_2–20

Galloway
1155 Kelly Johnson Blvd., Suite 305
Colorado Springs, CO 80920
719.900.7220
GallowayUS.com

COPYRIGHT
THESE PLANS ARE AN INSTRUMENT OF SERVICE AND ARE THE PROPERTY OF GALLOWAY, AND MAY NOT BE DUPLICATED, DISCLOSED, OR REPRODUCED WITHOUT THE WRITTEN CONSENT OF GALLOWAY. COPYRIGHTS AND INFRINGEMENTS WILL BE ENFORCED AND PROSECUTED.

CONSTRUCTION DRAWINGS
MERIDIAN STORAGE
MERIDIAN STORAGE, LLC
VR239

STATE OF COLORADO, MERIDIAN ROAD & OWL PLACE
EL PASO COUNTY, FALCON, CO 80931

#	Date	Issue / Description	Init.

Project No:	MRS01
Drawn By:	JDM
Checked By:	CMWJ
Date:	PUB

PARKING DETAILS

P2.2