MERIDIAN STORAGE, LLC

MERIDIAN STORAGE

FALCON RANCHETTES FILING NO. 1A, NORTH HALF OF THE SOUTHEAST QUARTER OF SECTION 1 TOWNSHIP 13 SOUTH, RANGE 65 WEST OF THE 6TH P.M., COUNTY OF EL PASO STATE OF COLORADO, MERIDIAN ROAD & OWL PLACE

SITE DEVELOPMENT PLAN

PPR2336

PROJECT CONTACTS

PROPERTY OWNER
MIKE D TEXER
11750 OWL PLACE
PEYTON, CO 80831
TELE: (719) 641-9261
CONTACT: MIKE D TEXER
EMAIL: MIKE.TEXER@GMAIL.COM

APPLICANT
GALLOWAY & CO., INC.
1155 KELLY JOHNSON BLVD., SUITE 305
COLORADO SPRINGS, CO 80920
TELE: (719) 900-7220
CONTACT: CALEB JOHNSON
EMAIL: CALEBJOHNSON@GALLOWAYUS.COM

CIVIL ENGINEER
GALLOWAY & CO., INC.
1155 KELLY JOHNSON BLVD., SUITE 305
COLORADO SPRINGS, CO 80920
TELE: (719) 900-7220
CONTACT: BRADY SHYROCK, P.E.
EMAIL: BRADYSHYROCK@GALLOWAYUS.COM

LANDSCAPE ARCHITECT
GALLOWAY & CO., INC.
1155 KELLY JOHNSON BLVD., SUITE 305
COLORADO SPRINGS, CO 80920
TELE: (719) 900-7220
CONTACT: JON ROMERO. PLA
EMAIL: JONROMERO@GALLOWAYUS.COM

SURVEYOR
GALLOWAY & CO., INC.
1155 KELLY JOHNSON BLVD., SUITE 305
COLORADO SPRINGS, CO 80920
TELE: (719) 900-7220
CONTACT: BILL BROOKS
EMAIL: BILLBROOKS@GALLOWAYUS.COM

CITY & UTILITY CONTACTS

WATER
WOODMEN HILLS METRO DISTRICT
8046 EASTONVILLE ROAD
FALCON, CO 80831
TELE: (719) 495-2500
CONTACT: CODY RITTER
EMAIL: CODY@WHMD.ORG

WASTEWATER
WOODMEN HILLS METRO DISTRICT
8046 EASTONVILLE ROAD
FALCON, CO 80831
TELE: (719) 495-2500
CONTACT: CODY RITTER
EMAIL: CODY@WHMD.ORG

ELECTRIC
MOUNTAIN VIEW ELECTRIC ASSOCIATION
11140 E. WOODMEN RD.,
FALCON, CO 80831
TELE: (800) 388-9881
CONTACT: GINA PERRY
EMAIL: GINA.P@MVEA.COOP

NATURAL GAS
COLORADO SPRINGS UTILITIES
7710 DURANT DRIVE, P.O. BOX 1103, MAIL CODE 2150
COLORADO SPRINGS, CO 80947-2150
(719) 668-5573
CONTACT: AARON CASSIO
EMAIL: ACASSIO@CSU.ORG

FIRE
FALCON FIRE PROTECTION DISTRICT
7030 OLD MERIDIAN RD.,
FALCON, CO 80831
TELE: (719) 495-4050
CONTACT: TRENT HARWIG
EMAIL: THARWIG@FALCONFIREPD.ORG

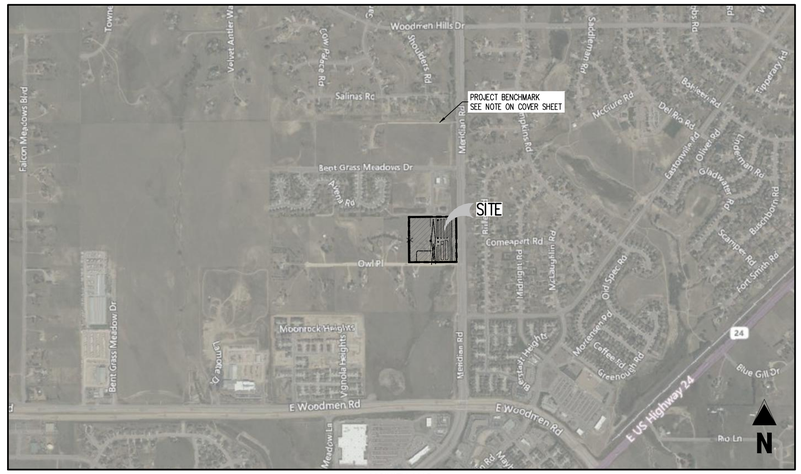

VICINITY MAP
0 200 500 1000
SCALE: 1"=1000'

SITE PLAN

GENERAL DEVELOPMENT DATA	
SITE ADDRESS	11750 OWL PLACE, PEYTON, CO 80831
JURISDICTION	EL PASO COUNTY, COLORADO
TAX SCHEDULE NUMBER	5301001001 & 5301001002
COUNTY FILE NUMBER	PPR2336
SITE AREA/TOTAL ACREAGE	418,612 SF / 9.61 ACRES
DEVELOPMENT SCHEDULE	SUMMER 2024
REQUIRED SETBACKS	ALL DEVELOPMENT STANDARDS FOR PRINCIPAL AND ACCESSORY USES ARE ESTABLISHED BY THE DEVELOPMENT PLAN
LOT 1 – NORTH	REQUIRED SETBACK: 25' BUILDING SETBACK – 0' LANDSCAPE SETBACK PROPOSED SETBACK: 25' BUILDING SETBACK – 0' LANDSCAPE SETBACK
LOT 1 – EAST	REQUIRED SETBACK: 25' BUILDING SETBACK – 25' LANDSCAPE SETBACK PROPOSED SETBACK: 25' BUILDING SETBACK – 25' LANDSCAPE SETBACK
LOT 1 – SOUTH	REQUIRED SETBACK: 25' BUILDING SETBACK – 10' LANDSCAPE SETBACK PROPOSED SETBACK: 25' BUILDING SETBACK – 10' LANDSCAPE SETBACK
LOT 1 – WEST	REQUIRED SETBACK: 25' BUILDING SETBACK – 10' LANDSCAPE SETBACK PROPOSED SETBACK: 25' BUILDING SETBACK – 10' LANDSCAPE SETBACK
LOT 2 – NORTH	REQUIRED SETBACK: 25' BUILDING SETBACK – 0' LANDSCAPE SETBACK PROPOSED SETBACK: 25' BUILDING SETBACK – 0' LANDSCAPE SETBACK
LOT 2 – EAST	REQUIRED SETBACK: 25' BUILDING SETBACK – 10' LANDSCAPE SETBACK PROPOSED SETBACK: 25' BUILDING SETBACK – 10' LANDSCAPE SETBACK
LOT 2 – SOUTH	REQUIRED SETBACK: 25' BUILDING SETBACK – 10' LANDSCAPE SETBACK PROPOSED SETBACK: 25' BUILDING SETBACK – 10' LANDSCAPE SETBACK
LOT 2 – WEST	REQUIRED SETBACK: 25' BUILDING SETBACK – 15' LANDSCAPE BUFFER PROPOSED SETBACK: 25' BUILDING SETBACK – 15' LANDSCAPE BUFFER
TOTAL GROSS BUILDING SQUARE FOOTAGE	55,350 SQ. FT.
TOTAL BUILDING FOOTPRINT	55,350 SQ. FT
OPEN SPACE, LANDSCAPING, AND IMPERMEABLE SURFACE PERCENTAGES	LANDSCAPING: 277,159 SQ. FT. / 60.31% ± IMPERMEABLE SURFACE: 182,399 SQ. FT. / 39.69% ± BUILDING FOOTPRINT: 55,350 SQ. FT. / 12.04% ±
LOCATION OF NO-BUILD AREAS	NO GRADING OR IMPROVEMENTS WILL BE OCCURRING IN ANY FLOOD PLAINS OR DRAINAGE AREAS.
EXISTING DEVELOPMENT DATA	
ZONING DISTRICT	CS
EXISTING LAND USE	SINGLE FAMILY RESIDENTIAL
ZONING FILE REFERENCE NUMBER	CS224
ORDINANCE NUMBER	
DRAINAGE BASIN	SAND CREEK
PROPOSED DEVELOPMENT DATA	
PROPOSED LAND USE	SELF STORAGE FACILITY, OFFICE & RV STORAGE
STORAGE UNITS	158
DENSITY	N/A
PROPOSED BUILDING HEIGHT	15 FT.
MAXIMUM ALLOWABLE BUILDING HEIGHT	45 FT.

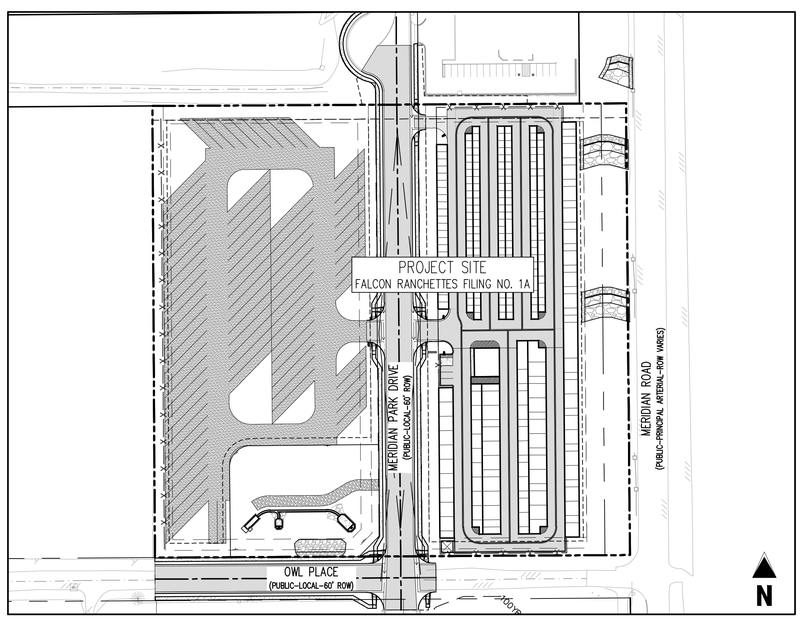

SITE MAP
0 20 50 100
SCALE: 1"=100'

SHEET INDEX		
SHEET NUMBER	SHEET DESCRIPTION	SHEET TITLE
1	C0.0	COVER SHEET
2	C1.1	SITE PLAN
3	C2.1	SITE DETAILS

PROJECT DESCRIPTION:
THE PROPOSED SELF-STORAGE FACILITY WILL PROVIDE SELF-STORAGE UNITS FOR RENT ON AN AS-NEEDED BASIS TO CUSTOMERS IN COLORADO SPRINGS AND EL PASO COUNTY. THE FACILITY WILL HAVE APPROXIMATELY 158 SELF-STORAGE UNITS OF VARIOUS SIZES. ONE EMPLOYEE WILL BE REQUIRED TO OPERATE THE FACILITY AND THE HOURS OF OPERATION WILL BE LIMITED TO BETWEEN 6:00AM AND 11:00PM DAILY.

GENERAL NOTES:
1. ALL SITE LIGHTING OR EXTERIOR LIGHTING FIXTURES SHALL BE FULL CUT-OFF OR SHIELDED TO PREVENT LIGHT SPILLAGE ONTO ADJACENT PROPERTIES AND ROADWAYS.
2. ALL "STOP SIGNS" WILL BE INSTALLED BY THE DEVELOPER AT THE LOCATIONS SHOWN ON THE DEVELOPMENT PLAN TO MEET MUTCD STANDARDS. CONTACT TRAFFIC ENGINEERING, SIGNS & MARKINGS AT 719-385-6720 FOR ASSISTANCE.
3. SIGNAGE IS NOT APPROVED PER THIS PLAN. A SEPARATE SIGN PERMIT IS REQUIRED. CONTACT THE DEVELOPMENT REVIEW ENTERPRISE AT 719-385-5982 TO BEGIN A SIGN PERMIT APPLICATION.
4. THE MINERAL ESTATE OWNER NOTIFICATION CERTIFICATION AFFIDAVIT WAS SUBMITTED AND CAN BE FOUND IN FILE WE239. THE APPLICANT (OR PROPERTY OWNER) HAS ATTESTED THERE ARE NO SEPARATE MINERAL ESTATE OWNER(S) IDENTIFIED AND NO FURTHER ACTION WAS TAKEN.
5. ACCESSIBLE ROUTES, INCLUDING RAMPS AND SIDEWALKS, WITHIN THE PUBLIC RIGHT-OF-WAY SHALL BE PER EL PASO COUNTY'S STANDARD DRAWINGS AND SPECIFICATIONS. EL PASO COUNTY'S INSPECTOR WILL HAVE THE FINAL AUTHORITY ON ACCEPTING THE PUBLIC IMPROVEMENTS.

LEGAL DESCRIPTION
A PARCEL OF LAND IN THE SOUTHEAST QUARTER OF SECTION 1, TOWNSHIP 13 SOUTH, RANGE 65 WEST, OF THE SIXTH PRINCIPAL MERIDIAN, COUNTY OF EL PASO, STATE OF COLORADO, MORE PARTICULARLY DESCRIBED AS FOLLOWS:

LOTS 1 & 2, FALCON RANCHETTES, ACCORDING TO THE PLAT THEREOF RECORDED IN PLAT BOOK V-2, PAGE 15, OF THE RECORDS OF EL PASO COUNTY, COLORADO.

CONTAINING 9.604 ACRES, MORE OR LESS.

BENCHMARK
THE SOUTHWEST CORNER OF LOT 1 WOODMEN HILLS FILING NO. 4, MONUMENTED BY A NO. 4 REBAR WITH A YELLOW PLASTIC CAP STAMPED "PLS 24964"
NAVD88 ELEVATION = 6947.67

BASIS OF BEARING
ALL BEARINGS ARE GRID BEARINGS OF THE COLORADO STATE PLANE COORDINATE SYSTEM, CENTRAL ZONE, NORTH AMERICAN DATUM 1983. BEARINGS ARE BASED ON THE SOUTH LINE OF LOTS 2, 3, & 4 OF FALCON RANCHETTES, AND IS CONSIDERED TO BEAR S89°40'45"W. DEFINED BY FOUND MONUMENTS AS FOLLOWS: A NO. 4 REBAR WITH A 1-1/4" YELLOW PLASTIC CAP STAMPED "LS 2372", BEING THE SOUTHEAST CORNER OF LOT 2; AND A NO. 4 REBAR WITH A 1-1/4" YELLOW PLASTIC CAP STAMPED "LS 2372", BEING THE SOUTHWEST CORNER OF LOT 4.

CAUTION – NOTICE TO CONTRACTOR
1. ALL UTILITY LOCATIONS SHOWN ARE BASED ON MAPS PROVIDED BY THE APPROPRIATE UTILITY COMPANY AND FIELD SURFACE EVIDENCE AT THE TIME OF SURVEY AND IS TO BE CONSIDERED AN APPROXIMATE LOCATION ONLY. IT IS THE CONTRACTOR'S RESPONSIBILITY TO FIELD VERIFY THE LOCATION OF ALL UTILITIES, PUBLIC OR PRIVATE, WHETHER SHOWN ON THE PLANS OR NOT, PRIOR TO CONSTRUCTION. REPORT ANY DISCREPANCIESTO THE ENGINEER PRIOR TO CONSTRUCTION.

811 Know what's below. Call before you dig.

2. WHERE A PROPOSED UTILITY CROSSES AN EXISTING UTILITY, IT IS THE CONTRACTOR'S RESPONSIBILITY TO FIELD VERIFY THE HORIZONTAL AND VERTICAL LOCATION OF SUCH EXISTING UTILITY, EITHER THROUGH POTHOLING OR ALTERNATIVE METHOD. REPORT INFORMATION TO THE ENGINEER PRIOR TO CONSTRUCTION.

PARKING TABLE

USE	PARKING RATIO	UNITS	PARKING REQUIRED	PARKING PROVIDED
MINI-STORAGE	1 / 100 UNITS	158	2	2
EMPLOYEE PARKING	1 / EMPLOYEE	1 (MAXIMUM PER SHIFT)	1	1
OFFICE	1/200 SF	200 SF	1	1
TOTAL			4	4
ADA (INCLUDED IN TOTAL COUNT)			1	1

OWNER'S STATEMENT
I, THE OWNER/DEVELOPER HAVE READ AND WILL COMPLY WITH THE REQUIREMENTS OF THE DEVELOPMENT PLAN.

MIKE D. TEXER — DATE
MERIDIAN STORAGE, LLC

PLANNING AND COMMUNITY DEVELOPMENT DIRECTOR:

MEGGAN HERINGTON — DATE
EXECUTIVE DIRECTOR

Galloway
1155 Kelly Johnson Blvd., Suite 305
Colorado Springs, CO 80920
719.900.7220
GallowayUS.com

COPYRIGHT
THESE PLANS ARE AN INSTRUMENT OF SERVICE AND ARE THE PROPERTY OF GALLOWAY, AND MAY NOT BE DUPLICATED, DISCLOSED, OR REPRODUCED WITHOUT THE WRITTEN CONSENT OF GALLOWAY. COPYRIGHTS AND INFRINGEMENTS WILL BE ENFORCED AND PROSECUTED.

SITE DEVELOPMENT PLAN
MERIDIAN STORAGE
MERIDIAN STORAGE, LLC
PPR2336

STATE OF COLORADO, MERIDIAN ROAD & OWL PLACE
EL PASO COUNTY, FALCON, CO 80931

#	Date	Issue / Description	Init.

Project No:	MRS01
Drawn By:	ASA
Checked By:	BAS
Date:	10/20/2023

COVER SHEET

PPR2336

C0.0
Sheet 1 of 3

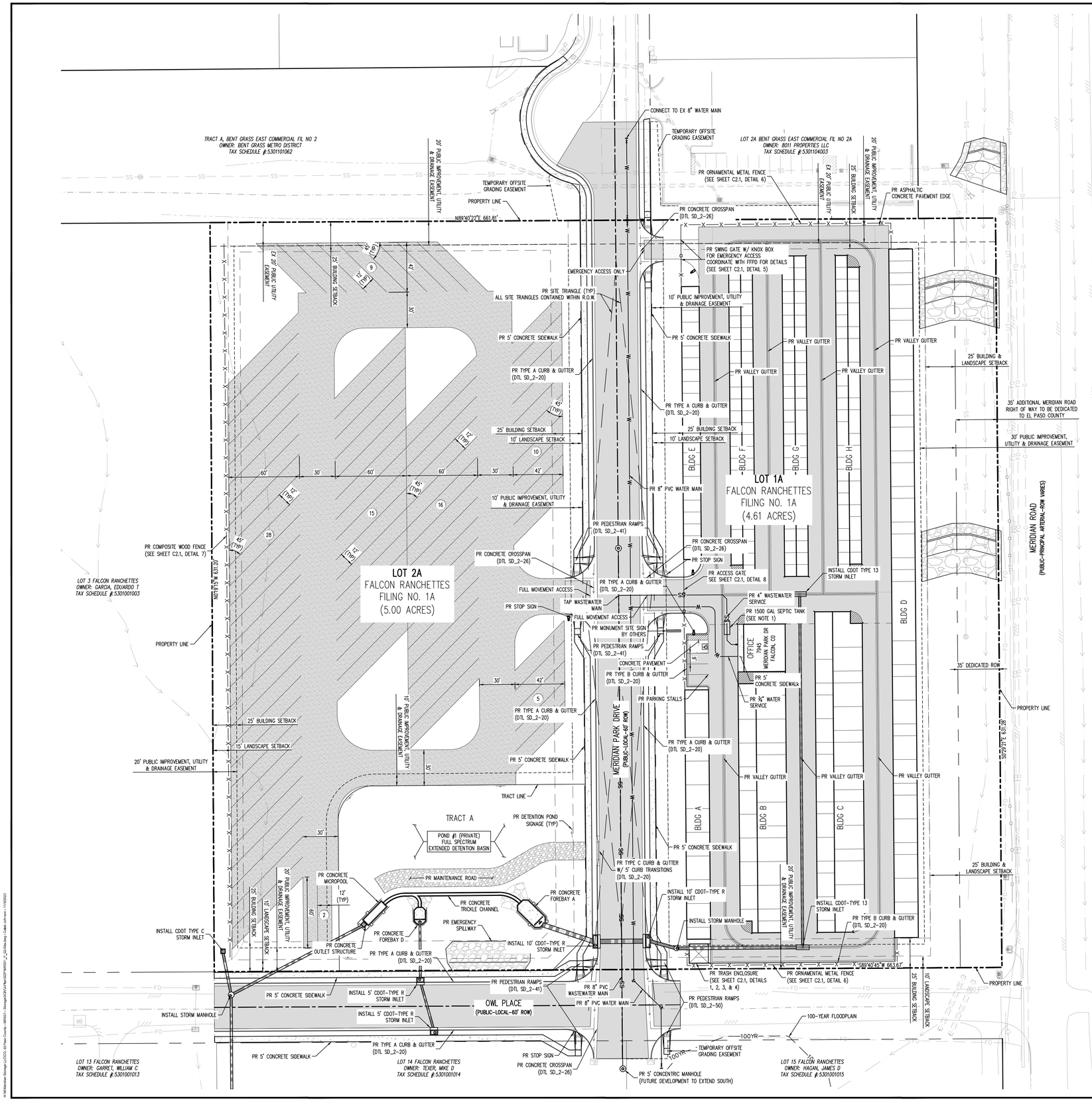

N

0 20 40

SCALE: 1"=40'

SITE LEGEND

PROJECT BOUNDARY LINE	EXISTING FENCE
ADJACENT PROPERTY BOUNDARY LINE	PROPOSED FENCE
RIGHT OF WAY LINE	EXISTING GUARDRAIL
EXISTING ADJACENT LOT LINE	PROPOSED CURB AND GUTTER
PROPOSED LOT LINE	EXISTING CURB AND GUTTER
EXISTING EASEMENT LINE	EXISTING EDGE OF ASPHALT
PROPOSED EASEMENT LINE	PROPOSED SIDEWALK
PROPOSED ROAD CENTERLINE	PROPOSED TRAIL
EXISTING ROAD CENTERLINE	PROPOSED GRAVEL PER ECM TABLE D-7
PROPOSED RIDGE LINE	RIPRAP OUTFALL PADS
PROPOSED SWALE LINE	12" CLASS 6 AGGREGATE BASE COURSE OR CRUSHED FINES OVER COMPACTED SUBGRADE
EXISTING SWALE LINE	EXISTING SIGN
100YR FLOODPLAIN BOUNDARY	PROPOSED SIGN
31 PARKING STALL COUNT	PROPOSED BOLLARDS

PAVING LEGEND

- PROPOSED CONCRETE
- EXISTING CONCRETE
- PROPOSED ASPHALT PAVING

UTILITY LEGEND

- EXISTING WATER LINE
- PROPOSED WATER LINE
- EXISTING SANITARY SEWER
- PROPOSED SANITARY SEWER
- EXISTING STORM SEWER
- PROPOSED STORM SEWER
- EXISTING GAS LINE
- PROPOSED GAS LINE
- EXISTING UNDERGROUND TELEPHONE
- EXISTING OVERHEAD ELECTRIC
- EXISTING FIBER OPTIC LINE
- EXISTING FIBER OPTIC STRUCTURES
- EXISTING TELEPHONE PEDESTAL
- EXISTING ELECTRIC TRANSFORMER
- EXISTING POWER POLE
- EXISTING STREET LIGHT
- PROPOSED STREET LIGHT
- PROPOSED WATER METER
- EXISTING WATER VALVE
- PROPOSED WATER VALVE
- EXISTING FIRE HYDRANT
- PROPOSED FIRE HYDRANT
- EXISTING STORM SEWER MANHOLE
- PROPOSED STORM SEWER MANHOLE
- EXISTING SANITARY SEWER MANHOLE
- PROPOSED SANITARY SEWER MANHOLE

NOTES

1. 1500 GALLON SEPTIC TANK TO BE INSTALLED ONLY IF THE DEVELOPMENT TO THE SOUTH (KOWN AS OWL MARKETPLACE) IS NOT YET COMPLETED. ONCE THE DOWNSTREAM WASTEWATER INFRASTRUCTURE IN MERIDIAN PARK DRIVE IS COMPLETED, THE SEPTIC TANK WILL BE REMOVED OR BYPASSED.

CAUTION – NOTICE TO CONTRACTOR

1. ALL UTILITY LOCATIONS SHOWN ARE BASED ON MAPS PROVIDED BY THE APPROPRIATE UTILITY COMPANY AND FIELD SURFACE EVIDENCE AT THE TIME OF SURVEY AND IS TO BE CONSIDERED AN APPROXIMATE LOCATION ONLY. IT IS THE CONTRACTOR'S RESPONSIBILITY TO FIELD VERIFY THE LOCATION OF ALL UTILITIES, PUBLIC OR PRIVATE, WHETHER SHOWN ON THE PLANS OR NOT, PRIOR TO CONSTRUCTION. REPORT ANY DISCREPANCIESTO THE ENGINEER PRIOR TO CONSTRUCTION.

Know what's below. Call before you dig.

2. WHERE A PROPOSED UTILITY CROSSES AN EXISTING UTILITY, IT IS THE CONTRACTOR'S RESPONSIBILITY TO FIELD VERIFY THE HORIZONTAL AND VERTICAL LOCATION OF SUCH EXISTING UTILITY, EITHER THROUGH POTHOLING OR ALTERNATIVE METHOD. REPORT INFORMATION TO THE ENGINEER PRIOR TO CONSTRUCTION.

PLANNING AND COMMUNITY DEVELOPMENT DIRECTOR:

Galloway
1155 Kelly Johnson Blvd., Suite 305
Colorado Springs, CO 80920
719.900.7220
GallowayUS.com

COPYRIGHT
THESE PLANS ARE AN INSTRUMENT OF SERVICE AND ARE THE PROPERTY OF GALLOWAY, AND MAY NOT BE DUPLICATED, DISCLOSED, OR REPRODUCED WITHOUT THE WRITTEN CONSENT OF GALLOWAY. COPYRIGHTS AND INFRINGEMENTS WILL BE ENFORCED AND PROSECUTED.

SITE DEVELOPMENT PLAN
MERIDIAN STORAGE
MERIDIAN STORAGE, LLC
PPR2336

STATE OF COLORADO, MERIDIAN ROAD & OWL PLACE
EL PASO COUNTY, FALCON, CO 80931

#	Date	Issue / Description	Init.

Project No:	MRS01
Drawn By:	ASA
Checked By:	BAS
Date:	10/20/2023

SITE PLAN

PPR2336

C1.1

Sheet 2 of 3

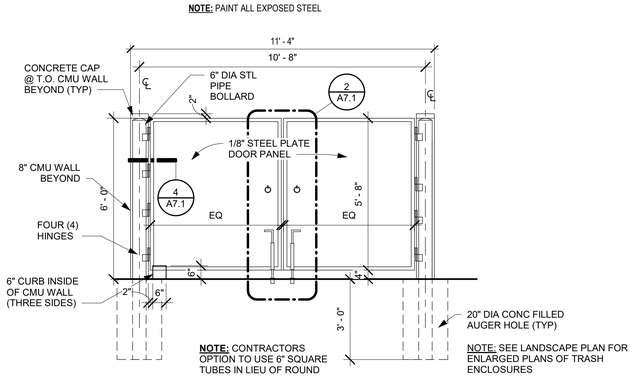

1 TRASH ENCLOSURE GATE ELEVATION
NOT TO SCALE

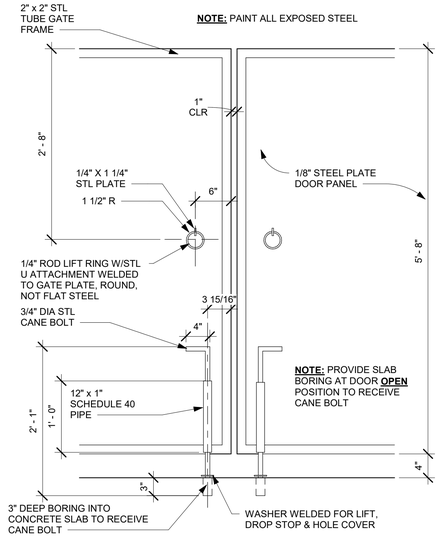

4 TRASH ENCLOSURE ENLARGED ELEVATION
NOT TO SCALE

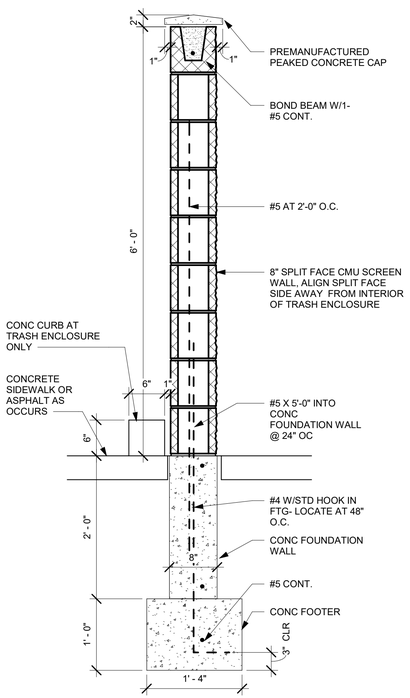

2 TRASH ENCLOSURE SECTION DETAIL
NOT TO SCALE

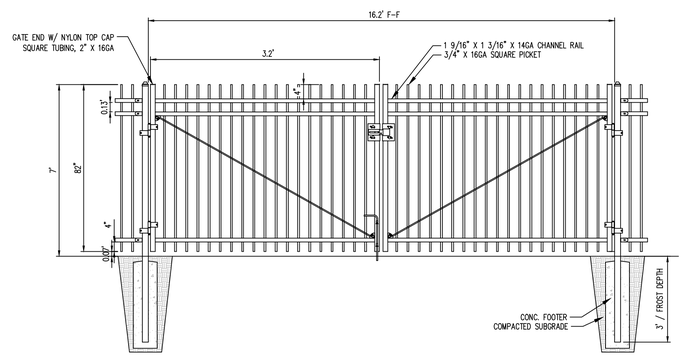

5 SWING GATE
NOT TO SCALE

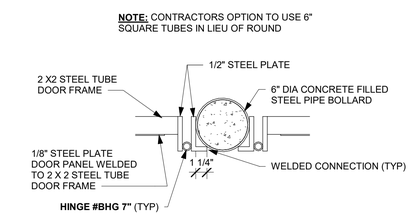

3 HINGE PLAN DETAIL
NOT TO SCALE

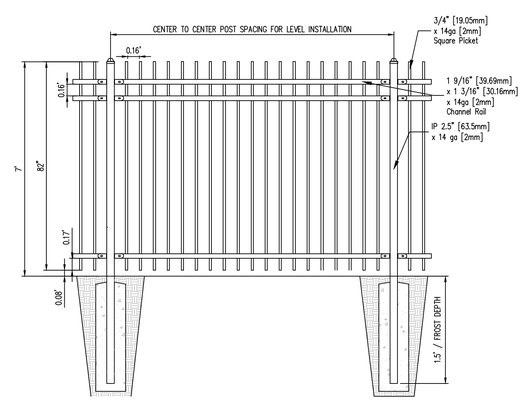

6 ORNAMENTAL METAL FENCE
NOT TO SCALE

PRIVACYLINK®
P.O. BOX 295
HYDE PARK, UT 84318
TOLL FREE: 1- 800-574-1076
PHONE: (435) 563-1058
FAX: (435) 563-1062
www.eprivacylink.com

☑ SELECT DESIRED COLOR:
- ☐ SADDLE
- ☐ WINCHESTER GRAY
- ☐ WOODLAND BROWN

☑ SELECT DESIRED POST CAP:
- ☐ PYRAMID CAP
- ☐ FLAT CAP

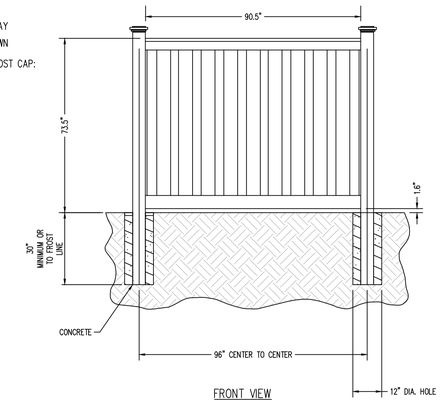

NOTES:
1. INSTALLATION TO BE COMPLETED IN ACCORDANCE WITH MANUFACTURER'S SPECIFICATIONS.
2. DO NOT SCALE DRAWING.
3. THIS DRAWING IS INTENDED FOR USE BY ARCHITECTS, ENGINEERS, CONTRACTORS, CONSULTANTS AND DESIGN PROFESSIONALS FOR PLANNING PURPOSES ONLY. THIS DRAWING MAY NOT BE USED FOR CONSTRUCTION.
4. ALL INFORMATION CONTAINED HEREIN WAS CURRENT AT THE TIME OF DEVELOPMENT BUT MUST BE REVIEWED AND APPROVED BY THE PRODUCT MANUFACTURER TO BE CONSIDERED ACCURATE.
5. CONTRACTOR'S NOTE: FOR PRODUCT AND COMPANY INFORMATION VISIT www.CADdetails.com/info AND ENTER REFERENCE NUMBER MRS01_P_0

7 TREX® SECLUSIONS COMPOSITE FENCE
NOT TO SCALE

MRS01_P_ REVISION DATE 09/11/2023

PROTECTED BY COPYRIGHT ©2023 CADDETAILS.COM LTD. CADdetails.com

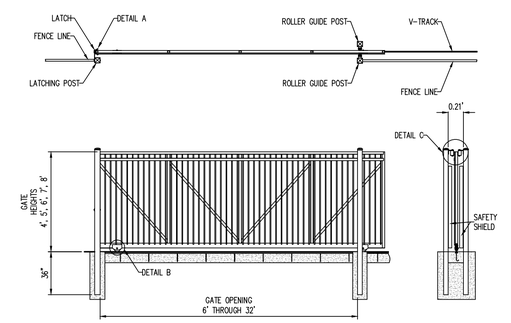

8 ROLLER GATE
NOT TO SCALE

PLANNING AND COMMUNITY DEVELOPMENT DIRECTOR:

Galloway
1155 Kelly Johnson Blvd., Suite 305
Colorado Springs, CO 80920
719.900.7220
GallowayUS.com

COPYRIGHT
THESE PLANS ARE AN INSTRUMENT OF SERVICE AND ARE THE PROPERTY OF GALLOWAY, AND MAY NOT BE DUPLICATED, DISCLOSED, OR REPRODUCED WITHOUT THE WRITTEN CONSENT OF GALLOWAY. COPYRIGHTS AND INFRINGEMENTS WILL BE ENFORCED AND PROSECUTED.

SITE DEVELOPMENT PLAN
MERIDIAN STORAGE
MERIDIAN STORAGE, LLC
PPR2336

STATE OF COLORADO, MERIDIAN ROAD & OWL PLACE
EL PASO COUNTY, FALCON, CO 80931

#	Date	Issue / Description	Init.

Project No:	MRS01
Drawn By:	ASA
Checked By:	BAS
Date:	10/20/2023

SITE DETAILS

PPR2336

C2.1
Sheet 3 of 3