FINAL DRAINAGE REPORT
FOR
FOREST LAKES FILING 6
EL PASO COUNTY, COLORADO

September 2020

Prepared for:
FOREST LAKES RESIDENTIAL DEVELOPMENT, LLC
6385 CORPORATE DRIVE, SUITE 200
COLORADO SPRINGS CO 80919
(719) 592-9333

Prepared by:
CLASSIC CONSULTING ENGINEERS & SURVEYORS
619 N. CASCADE AVENUE, SUITE 200
COLORADO SPRINGS CO 80903
(719) 785-0790

Job no. 1175.60
PCD File #

SF-20-027

ENGINEER'S STATEMENT:
The attached drainage plan and report were prepared under my direction and supervision and are correct to the best of my knowledge and belief. Said drainage report has been prepared according to the criteria established by the El Paso County for drainage reports and said report is in conformity with the master plan of the drainage basin. I accept responsibility for any liability caused by any negligent acts, errors, or omissions on my part in preparing this report.

Kyle R Campbell, Colorado P.E. #29794 Date

DEVELOPER'S STATEMENT:
I, the developer, have read and will comply with all of the requirements specified in this drainage report and plan.

Business Name: Forest Lakes Residential Development, LLC

By: _____

Title: _____

Address: 6385 Corporate Drive, Suite 200

Colorado Springs, CO 80919

EL PASO COUNTY ONLY:
Filed in accordance with the requirements of the Drainage Criteria Manual, Volumes 1 and 2, El Paso County Engineering Criteria Manual and Land Development Code as amended.

Jennifer Irvine, P.E. Date
County Engineer / ECM Administrator

FINAL DRAINAGE REPORT FOR FOREST LAKES FILING 6

TABLE OF CONTENTS:

PURPOSE	Page 4
PROJECT DESCRIPTION	Page 4
PREVIOUS REPORTS	Page 5
SOILS & GEOLOGY	Page 5
DRAINAGE CRITERIA	Page 5
FLOODPLAIN STATEMENT	Page 6
EXISTING DRAINAGE CONDITIONS	Page 6
PROPOSED DRAINAGE CONDITIONS	Page 7
STORMWATER QUALITY (FOUR STEP PROCESS)	Page 19
DRAINAGE AND BRIDGE FEES	Page 20
SUMMARY	Page 21
REFERENCES	Page 22

APPENDICES

VICINITY MAP

SOILS MAP (S.C.S. SURVEY)

F.E.M.A. MAP

EXISTING CONDITIONS CALCULATIONS

DEVELOPED CONDITIONS CALCULATIONS

DETENTION POND 'B'

HYDRUALIC GRADE LINE (HGL) CALCULATIONS

DRAINAGE MAPS

FINAL DRAINAGE REPORT FOR FOREST LAKES FILING 6

PURPOSE

This document is the Final Drainage Repot for Forest Lakes Filing 6. The purpose of this report is to identify onsite and offsite drainage patterns, define areas tributary to the proposed full spectrum detention and water quality facility the site, and to safely route developed storm water runoff via a proposed storm sewer system. The proposed Filings 5, 6, & 7 development shall be in adherence to the El Paso County approved Master Development Drainage Plan and Amendment/Preliminary Drainage Report for Forest Lakes as well as current County Drainage Criteria.

PROJECT DESCRIPTION

The Forest Lakes Filing 6 is 79.168 acres of a phased master planned community located in northern El Paso County, Colorado. A re-plat of a 1.716-acre tract platted with Forest Lakes Filing 5 is being completed with the Filing 6 plat, bringing the total Plat area to 80.884 acres. The master planned land includes areas of open space, residential, trails, drainage, preservation and two water supply reservoirs. The property lies to the east of Pike National Forest, north of the United States Air Force Academy, west of Interstate 25 and south of the Town of Monument. The Forest Lakes property is located in portions of Sections 27, 28, 29 and 33 of Township 11 South, Range 67 West of the Sixth Principal Meridian and covers approximately 900 acres. The proposed Filing 6 is within the far westerly area, east of Filing 5 and include a bridge crossing and continuation of Mesa Top Drive. The Filing 6 boundary is just north of the confluence of Beaver Creek, Hell Creek and North Beaver Creek. These watersheds are tributary to Monument Creek. The site is located within the Beaver Creek Drainage Basin.

A previous MDDP Amendment and Preliminary Drainage Report for Filings 5, 6, 7 has been approved by the County and defines existing and updated developed peak flow data for the 5-year and 100-year recurrence intervals within the Filings 5, 6, & 7 portions of the property. The previous report established the overall drainage design information and to identified the required storm drainage and flood control facilities within the Filings 5, 6, & 7 property. Final development of Filing 6 is consistent with this approved report with minor modification to the surrounding lot layout but no changes to the overall roadway design. The vicinity map for the Filings 5, 6, & 7 Amendment area is presented in the Appendix of this report.

As the limits of Filing 6 are outside of the existing drainage corridors, there is no grading proposed within the existing wetlands, mouse habitat, and/or 100-year floodplain limits. The drainage maps in the Appendix of this report show the existing wetland limits, Preble's Jumping Mouse habitat limits, and effective FEMA floodplain.

PREVIOUS REPORTS

The latest and most applicable previously approved drainage study is the following:

1. "Master Development Drainage Plan Amendment and Preliminary Drainage Report for Forest Lakes (Filing 5, 6, 7)," by Classic Consulting Engineers & Surveyors LLC, approved April 1, 2019.
2. "Final Drainage Report for Forest Lakes Filing No. 5," by Classic Consulting Engineers & Surveyors, LLC, approved June 9, 2020.

SOILS AND GEOLOGY

The soils within the Forest Lakes Filing 6 and tributary area are Hydrologic Soil Group B, mostly Jarre-Tecolote complex and Peyton-Pring complex (See Appendix for Soil Map).

DRAINAGE CRITERIA

Hydrologic calculations were performed using the City of Colorado Springs/El Paso County Drainage Criteria Manual, as revised in November 1991 and October 1994. Full Spectrum Detention and Stormwater quality analysis, Extended Detention Basin (EDB) design, are per the Urban Drainage and Flood Control District Manual and UD-BMP Version 3.05 spreadsheet. The Rational Method was used to estimate stormwater runoff from the developed project and tributary to the proposed full spectrum detention/water quality pond. Developed Conditions Basins E & L1 calculate the overland flow length (time of concentration) using undeveloped criteria (300' max. length) and not 100' for developed/urban land use. This is due to the large amount of un-developed steep sloped tributary area within each of these basins that do not and will not contain houses, driveways, or any other type of impervious developed surface. Using this overland flow more accurately defines the peak time for runoff to reach

the downstream facilities. The UDFCD UD-Inlet excel workbook was used to verify street capacities, size sump inlets, and calculate interception and flow-by rates of at-grade inlets. The full spectrum detention/water quality pond outlet was designed using the UDFCD UD-Detention Version 3.07 excel workbook. The UD-Sewer computer program was used to calculate the hydraulic grade line (HGL) within the storm sewer system. An overall tributary area exhibit is included to show the various types of pervious and impervious areas established to determine the overall imperviousness of the 55.31 acres tributary to the proposed full spectrum detention/water quality facility.

FLOODPLAIN STATEMENT

A portion of the overall Forest Lakes development is located within a floodplain as determined by the Flood Insurance Rate Maps (F.I.R.M.) Map Numbers 08041 C0267G, CO266G, CO258G, & CO259G effective date, December 7, 2018 (See Appendix for overlay exhibit). However, there is no portion of Filing 6 development (homes, roads) within the floodplain limits. There are a few 'informal trail' crossings of the floodplain within Tract A of Filing 6. These will be made along natural paths with no disturbance or surface installation and therefore do not require additional permitting.

Revise statement. This filing is installing the Emergency Access Road with a concrete section within the channel across the wetlands per the preliminary plan

EXISTING DRAINAGE CONDITIONS

As defined in the MDDP Amendment and Preliminary Drainage Report, there are multiple off-site basins and open space areas tributary to the Filings 5-7 area. Within this report is the Existing Conditions of the area directly tributary and that of Filing 6 of Forest Lakes. An Existing Conditions Drainage Map is in included in the Appendix. Design Point 3 is not the total runoff within Beaver Creek, but is only what is from the Filing 6 and directly tributary area. These values will be used to compare rates with the Developed Drainage Conditions.

DESIGN POINT 1 (Q_5 = 1,047 cfs and Q_{100} = 3,123 cfs) is the overall runoff within North Beaver Creek channel as defined by the "Forest Lakes Master Development Drainage Plan El Paso County Colorado," by Kiowa Engineering Corporation, last revised April 11, 2002. North Beaver Creek approximately bi-sects the Filing 6 boundary and drains from the north to the south-east into the larger Beaver Creek.

Within North Beaver Creek are FEMA Effective 100-yr floodplain limits and US Corps of Engineers Jurisdictional Wetlands. These limits are shown and notated on the Drainage Maps.

DESIGN POINT 2 (Q_5 = 4.6 cfs and Q_{100} = 31.0 cfs) is the existing conditions runoff from Basins OS-3 & EX-D. Basin OS-3 is 5.04 acres of National Forest Land (open space) that drains onto the north-west corner of the Filing/Basin EX-D. Basin EX-D is 7.59 acres of on-site land that combines with the runoff from Basin OS-3 and drains to the east into Basin EX-A and into North Beaver Creek to Design Point 3.

DESIGN POINT 3 (Q_5 = 19.7 cfs and Q_{100} = 132.1 cfs) is the existing runoff draining into North Beaver Creek from just Forest Lakes on-site basins and immediately tributary area. This runoff is not the total amount within the channel as that is represented by DP-1 and the previously approved MDDP. Specifically, this runoff is that from Design Point 2 and Basins OS-2, EX-A, and EX-B. Basin OS-2 is 19.91 acres of an existing 40-acre, one owner, home lot that sits north of Forest Lakes and drains south onto Basin EX-B. Basin EX-B is 8.89 acres of onsite Forest Lakes land that combines with the OS-2 runoff and drains south, along North Beaver Creek but not into the main channel until the southern tip of the Basin limits. Basin EX-A is 29.44 acres of onsite Filing 6 property that includes the North Beaver Creek. This runoff rate will be used as a comparison point for the Developed Conditions analysis and allowable discharge rates into the existing, natural North Beaver Creek corridor and downstream facilities.

DESIGN POINT 4 (Q_5 = 10.7 cfs and Q_{100} = 72.1 cfs) is the existing runoff from Basin EX-E, 33.36 acres of onsite Forest Lakes Filing 6 and future Filing 7 land, including a large portion of the existing large 'hill' located on the property. This area doesn't drain into the North Beaver Creek Channel (DP-3), but along the same south-eastern drainage direction into a large section of existing wetlands and then directly into Beaver Creek channel and Preble's Jumping Mouse limits.

DESIGN POINT 5 (Q_5 = 9.9 cfs and Q_{100} = 66.7 cfs) is the existing conditions runoff from Basins OS-1 & EX-C. Basin OS-1 is 10.31 acres of existing large lots (5-acre+) single family homes that site north of Forest Lakes and drain onto Basin EX-C. Basin EX-C is 16.54 acres of on-site land that combines with the runoff from Basin OS-1 and drains to the south into facilities installed with Forest Lakes Filing 5. These existing inlets intercept this runoff and route it into North Beaver Creek, south of Design Point 3. Nothing

has changed in this tributary area from the previously approved Forest Lakes Filing 5 Final Drainage Report. This runoff continues south-east into Beaver Creek then eventually into Bristlecone Reservoir.

PROPOSED DRAINAGE CONDITIONS

Developed runoff from Filing 6 will be collected in a Public storm system and piped into the Privately owned and maintained full spectrum detention/water quality facility that will detain and treat the developed runoff prior to releasing at or below historic rates to the downstream channel. As previously mentioned, the rational method was used to estimate developed runoff values. All storm sewer inlets and pipes collecting runoff within the County right-of-way will be 'Public'. All storm sewer outside of right-of-way, including the pond outfall pipe, is 'Private' as is the proposed full spectrum detention facility. Private facilities will be owned and maintained by the Forest Lakes Metropolitan District.

Per the current El Paso County Drainage Criteria for stormwater capacity within street sections, the following summaries of Figures 7-2, 7-5, and 7-7 applies: all proposed roads are Residential.

Street Type	*Allowable – Initial Storm (5 yr)*	*Allowable–Major Storm (100 yr)*
Residential w/Ramp Curb	1.5% street slope = 10 cfs 2% street slope = 12 cfs 3% street slope = 14 cfs 4% street slope = 16.5 cfs No curb overtopping.	1.5% street slope = 46 cfs 2% street slope = 44 cfs 3% street slope = 39 cfs 4% street slope = 36 cfs 12" maximum depth at flowline.
Residential w/Vertical Curb (6" Vertical Curb)	1.5% street slope = 13 cfs 2% street slope = 15 cfs 3% street slope = 18 cfs 4% street slope = 20.5 cfs No curb overtopping.	1.5% street slope = 45 cfs 2% street slope = 43 cfs 3% street slope = 38 cfs 4% street slope = 35 cfs 12" maximum depth at flowline.

At-grade inlets and sump (low-points) were designed in a way that street capacity is not an issue anywhere within the proposed Filing or surrounding and future roadways. Street capacity has also been verified at each design point by using the UD-Inlet Excel workbook (located in Appendix) from Urban

Drainage Flood Control District (UDFCD). Inlet sizing is also per the UD-Inlet Excel workbook. Drainage from individual lots are assumed to travel in side-lot swales to the street. One Site-Level Low Impact Development form (IRF form) is included in the Appendix of this report, for the basins that discharge to the proposed full spectrum detention and water quality Pond B. A detailed description of the developed flows for Forest Lakes Filing No. 6 is as follows:

DESIGN POINT 1A (Q_5 = 9.8 cfs and Q_{100} = 23.8 cfs) is the developed runoff from Basin A, 6.16 acres of future Filing 7 home lots, open space (hill area), and local roadway. This Design Point was analyzed in order to accurately model the runoff that will be collected in the sump location being installed with Filing 6 (Design Points 5 & 6B). A 15' at-grade inlet will be installed in the future at this location along Mesa Top Drive. This future Filing 7 storm system will contain a separate Full Spectrum Detention Facility (Pond A) which will be detailed with the future Final Drainage Report for Filing 7. The at-grade inlet will intercept Q_5 = 9.2 cfs and Q_{100} = 15.3 cfs while the remaining runoff will continue south-east along the future curb to Design Point 1B. Pipe 1, future 24" RCP, will convey the intercepted runoff to the future storm system of Filing 7.

DESIGN POINT 1B (Q_5 = 4.6 cfs and Q_{100} = 22.9 cfs) is the developed runoff from Basin B1, 4.69 acres of future Filing 7 home lots along Mesa Top Drive, open space (hill area), and local roadway and the flow-by runoff from DP-1A. This Design Point was analyzed in order to accurately model the runoff that will be collected in the sump location being installed with Filing 6 (Design Points 5 & 6B). A 15' at-grade inlet will be installed in the future at this location. This future Filing 7 storm system will contain a separate Full Spectrum Detention Facility (Pond A) which will be detailed with the future Final Drainage Report for Filing 7. The at-grade inlet will intercept Q_5 = 4.6 cfs and Q_{100} = 15.0 cfs while the remaining runoff will continue south-east along the future curb to Design Point 2. Pipe 2, future 24" RCP, will convey the intercepted runoff to the future storm system of Filing 7.

DESIGN POINT 2 (Q_5 = 3.7 cfs and Q_{100} = 18.5 cfs) is the developed runoff from Basin B2, 3.16 acres of future Filing 7 home lots along Mesa Top Drive, open space (hill area), and local roadway and the flow-by runoff from DP-1B. This Design Point was analyzed in order to accurately model the runoff that will be collected in the sump location being installed with Filing 6 (Design Points 5 & 6B). A 15' at-grade inlet

will be installed in the future at this location. This future Filing 7 storm system will contain a separate Full Spectrum Detention Facility (Pond A) which will be detailed with the future Final Drainage Report for Filing 7. The at-grade inlet will intercept Q_5 = 3.7 cfs and Q_{100} = 13.4 cfs while the remaining runoff will continue east along the future curb to Design Point 3. Pipe 3, future 24" RCP, will convey the intercepted runoff to the future storm system of Filing 7.

DESIGN POINT 3 (Q_5 = 5.9 cfs and Q_{100} = 24.3 cfs) is the developed runoff from Basin C, 6.00 acres of future Filing 7 home lots along Mesa Top Drive, open space (hill area), and local roadway and the flow-by runoff from DP-2. This Design Point was analyzed in order to accurately model the runoff that will be collected in the sump location being installed with Filing 6 (Design Points 5 & 6B). A 15' at-grade inlet will be installed in the future at this location. This future inlet and storm system will connect with that being installed with Filing 6 and will ultimately drain to the proposed Full Spectrum Detention Facility (Pond B). As such, this basin and future developed area are included in the Pond sizing calculations within this report. The at-grade inlet will intercept Q_5 = 5.9 cfs and Q_{100} = 15.5 cfs while the remaining runoff will continue east along the future curb to Design Point 4. Pipe 4, future 24" RCP, will convey the intercepted runoff to the east within Mesa Top Drive to a junction manhole, combining with runoff from Pipes 5 and 6A.

DESIGN POINT 4 (Q_5 = 3.7 cfs and Q_{100} = 19.8 cfs) is the developed runoff from Basin D, 2.43 acres of future Filing 7 home lots along Mesa Top Drive, open space (hill area), and local roadway and the flow-by runoff from DP-3. This Design Point was analyzed in order to accurately model the runoff that will be collected in the sump location being installed with Filing 6 (Design Points 5 & 6B). A 15' at-grade inlet will be installed in the future at this location. This future inlet and storm system will connect with that being installed with Filing 6 and will ultimately drain to the proposed Full Spectrum Detention Facility (Pond B). As such, this basin and future developed area are included in the Pond sizing calculations within this report. The at-grade inlet will intercept Q_5 = 3.7 cfs and Q_{100} = 13.9 cfs while the remaining runoff will continue east along the future and proposed curb to the sump inlet at Design Point 5. A future 24" RCP lateral (Pipe 5) will convey the intercepted runoff to the adjacent storm manhole, combining with Pipe 4 and Pipe 6A (from Design Point 6A).

DESIGN POINT 5 (Q_5 = 2.8 cfs and Q_{100} = 18.9 cfs) is the developed runoff from Basin E, 5.92 acres of open space (hill area) and local roadway, and the flow-by runoff from DP-4. A 15' sump inlet will be installed at this location with Filing 6. The entirety of this runoff will be collected by this inlet and the runoff routed via a 24" RCP (Pipe 7) to an adjacent storm manhole, combining with Pipes 6B and 8. The overflow path for this sump inlet (in case of inlet failure) is to overtop the crown of roadway and the high point at the intersection of Mesa Top Drive and Timber Trek Way, and to drain east then north, along Timber Trek Way to downstream facilities.

DESIGN POINT 6A (Q_5 = 4.1 cfs and Q_{100} = 8.3 cfs) is the developed runoff from Basin F1, 1.60 acres of future Filing 7 home lots and local roadway (Mesa Top Drive). This Design Point was analyzed in order to accurately model the runoff that will be collected in the sump location being installed with Filing 6 (Design Points 5 & 6B). A 5' at-grade inlet will be installed in the future at this location. This future inlet and storm system will connect with that being installed with Filing 6 and will ultimately drain to the proposed Full Spectrum Detention Facility (Pond B). As such, this basin and future developed area are included in the Pond sizing calculations within this report. The at-grade inlet will intercept Q_5 = 2.6 cfs and Q_{100} = 3.6 cfs while the remaining runoff will continue east along the future and proposed curb to the sump inlet at Design Point 6B. A future 18" RCP lateral (Pipe 6A) will convey the intercepted runoff to the adjacent storm manhole, combining with Pipe 4 and Pipe 5 (from Design Point 5). Pipe 6B (30" RCP Q_5 = 12.0 cfs and Q_{100} = 32.7 cfs) will convey the combined runoff from this manhole to the east, where it will connect with the pipe stub installed with the proposed Filing 6 subdivision. This future Filing 7 runoff will ultimately drain into the proposed Pond B and is therefore included in the IRF and pond sizing calculations.

DESIGN POINT 6B (Q_5 = 3.8 cfs and Q_{100} = 9.4 cfs) is the developed runoff from Basin F2, 0.91 acres of future Filing 7 home lots and local roadway (Mesa Top Drive), and the flow-by runoff from DP-6A. A 10' sump inlet will be installed at this location with Filing 6. The entirety of this runoff will be collected by this inlet and the runoff routed via an 18" RCP (Pipe 8) to an adjacent storm manhole, combining with Pipes 6B and 7. Pipe 9 (36" RCP Q_5 = 17.7 cfs and Q_{100} = 56.9 cfs) will convey the combined runoff from this manhole to the east within Mesa Top Drive and Timber Trek Way toward the inlets at Design Points 7A & 7B. The overflow path for this sump inlet (in case of inlet failure) is to overtop the high point at the

intersection of Mesa Top Drive and Timber Trek Way, and to drain east then north, along Timber Trek Way to downstream facilities.

DESIGN POINT 7A (Q_5 = 4.7 cfs and Q_{100} = 9.6 cfs) is the developed runoff from Basin G, 1.98 acres of proposed Filing 6 home lots and local roadways along Timber Trek Way and Mesa Top Drive. A 10' at-grade inlet will be installed at this location with Filing 6. The portion of this runoff collected by this inlet (Q_5 = 4.5 cfs and Q_{100} = 6.9 cfs) is routed via an 18" RCP (Pipe 10) to an adjacent storm manhole, combining with Pipes 9 and 11.

DESIGN POINT 7B (Q_5 = 3.0 cfs and Q_{100} = 6.2 cfs) is the developed runoff from Basin H1, 1.23 acres of proposed Filing 6 home lots and local roadways along Timber Trek Way. A 10' at-grade inlet will be installed at this location with Filing 6. The portion of this runoff collected by this inlet (Q_5 = 3.0 cfs and Q_{100} = 5.4 cfs) is routed via an 18" RCP (Pipe 11) to an adjacent storm manhole, combining with Pipes 9 and 10. Pipe 12 (42" RCP Q_5 = 23.7 cfs and Q_{100} = 65.7 cfs) will convey the combined runoff from this manhole to the north-east within Timber Trek Way toward the proposed Pond B.

DESIGN POINT 8 (Q_5 = 5.4 cfs and Q_{100} = 14.2 cfs) is the developed runoff from Basin H2, 2.34 acres of proposed Filing 6 home lots and local roadways along Timber Trek Way. A 15' sump inlet will be installed at the end of the Timber Trek Way cul-de-sac with Filing 6. The overflow route in case of inlet failure will be to overtop the curb and attached walk and drain east into the proposed Full Spectrum Detention Pond B. The entirety of this runoff is routed via a 24" RCP (Pipe 13) to an adjacent storm manhole, combining with the 42" main (Pipe 12). Pipe 14 (42" RCP Q_5 = 28.2 cfs and Q_{100} = 77.6 cfs) will convey the combined runoff from this manhole into the proposed Pond B/Design Point 18.

DESIGN POINT 9A (Q_5 = 6.4 cfs and Q_{100} = 27.6 cfs) is the developed runoff from Basin J, 9.56 acres of open space (hill area) along Mesa Top Drive, one typical home lot, and local roadway. A 15' at-grade inlet will be installed at this location along Mesa Top Drive. The at-grade inlet will intercept Q_5 = 6.4 cfs and Q_{100} = 16.4 cfs while the remaining runoff will continue south-east along the proposed curb to Design Point 9B. Pipe 15, proposed 24" RCP, will convey the intercepted runoff to an adjacent manhole within Mesa Top Drive combining with Pipe 16.

Provide a narrative description of Design Point 9B

DESIGN POINT 10 (Q_5 = 4.1 cfs and Q_{100} = 8.1 cfs) is the developed runoff from Basin K, 1.47 acres of Mesa Top Drive and adjacent Filing 6 home lots. A 15' at-grade inlet will be installed at this location along Mesa Top Drive. The at-grade inlet will intercept Q_5 = 4.1 cfs and Q_{100} = 7.9 cfs while the remaining runoff will continue south-east along the proposed curb to Design Point 11. Pipe 16, proposed 18" RCP, will convey the intercepted runoff to an adjacent manhole within Mesa Top Drive combining with Pipe 15. Pipe 17 (24" RCP Q_5 = 10.3 cfs and Q_{100} = 23.8 cfs) will convey the combined runoff from this manhole south-east within Mesa Top Drive eventually reaching the proposed Pond B.

DESIGN POINT 11 (Q_5 = 7.3 cfs and Q_{100} = 16.1 cfs) is the developed runoff from Basin M, 3.66 acres of Filing 6 typical home lots and local roadway (Mesa Top Drive). The runoff not collected by DP-10 (flow-by) is also reaching this design point and at-grade inlet. A 15' at-grade inlet will be installed at this location along Mesa Top Drive. The at-grade inlet will intercept Q_5 = 7.3 cfs and Q_{100} = 12.5 cfs while the remaining runoff will continue onto the intersection of Mesa Top and Mesa Top and drain east to Design Point 15. Pipe 20, proposed 24" RCP, will convey the intercepted runoff to an adjacent manhole within Mesa Top Drive combining with Pipes 19 & 20.

DESIGN POINT 12 (Q_5 = 5.7 cfs and Q_{100} = 21.9 cfs) is the developed runoff from Basin L2, 2.61 acres of Filing 6 home lots, open space (hill area) and Mesa Top Drive. A 15' at-grade inlet will be installed at this location along Mesa Top Drive. The at-grade inlet will intercept Q_5 = 5.7 cfs and Q_{100} = 14.7 cfs while the remaining runoff will continue onto the intersection of Mesa Top and Mesa Top and drain to the sump inlet at Design Point 15. Pipe 21, proposed 24" RCP, will convey the intercepted runoff to an adjacent manhole within Mesa Top Drive combining with Pipes 19 & 20. Pipe 22 (42" RCP Q_5 = 24.9 cfs and Q_{100} = 63.9 cfs) will convey the combined runoff from this manhole south then east within Mesa Top Drive eventually reaching the proposed Pond B.

DESIGN POINT 13 (Q_5 = 5.1 cfs and Q_{100} = 17.3 cfs) is the developed runoff from Basin N, 5.42 acres of Filing 6 home lots, open space (hill area) and Mesa Top Drive. A 15' at-grade inlet will be installed at this location along Mesa Top Drive. The at-grade inlet will intercept Q_5 = 5.1 cfs and Q_{100} = 13.0 cfs while the remaining runoff will continue east through the intersection of Mesa Top and Mesa Top and drain to the sump inlet at Design Point 15. Pipe 23, proposed 18" RCP, will convey the intercepted runoff to an

adjacent manhole within Mesa Top Drive combining with Pipe 22. Pipe 24 (42" RCP Q_5 = 29.7 cfs and Q_{100} = 76.2 cfs) will convey the combined runoff from this manhole east within Mesa Top Drive toward the sump inlets at Design Points 14 & 15.

DESIGN POINT 14 (Q_5 = 3.7 cfs and Q_{100} = 7.1 cfs) is the developed runoff from Basin P, 1.23 acres of Filing 6 home lots and Mesa Top Drive. A 10' sump inlet will be installed at this location along Mesa Top Drive. The sump inlet will intercept all of this runoff and an 18" RCP (Pipe 25) will convey the water to an adjacent manhole, combining with Pipes 24 & 26. In the event of inlet failure, the emergency overflow path is to overtop the adjacent high point in Mesa Top and drain to the east toward Design Points 16 & 17.

DESIGN POINT 15 (Q_5 = 2.1 cfs and Q_{100} = 18.5 cfs) is the developed runoff from Basin Q, 0.95 acres of Filing 6 home lots, open space, and Mesa Top Drive. A 15' sump inlet will be installed at this location along Mesa Top Drive. The sump inlet will intercept the entirety of this runoff and a 24" RCP (Pipe 26) will convey the water to an adjacent manhole, combining with Pipes 24 & 25. Pipe 27 (48" RCP Q_5 = 34.1 cfs and Q_{100} = 98.7 cfs) will convey the combined runoff from this manhole east within Mesa Top Drive toward the sump inlets at Design Points 16 & 17, and eventually reaching Full Spectrum Detention Pond B.

DESIGN POINT 16 (Q_5 = 1.5 cfs and Q_{100} = 2.8 cfs) is the developed runoff from Basin R, 0.50 acres of a Filing 6 home lot, open space area, and Mesa Top Drive. A 5' sump inlet will be installed at this location along Mesa Top Drive. The sump inlet will intercept all of this runoff and an 18" RCP (Pipe 28) will convey the water to an adjacent manhole, combining with Pipes 27 & 29. In the event of inlet failure, the emergency overflow path is to overtop the adjacent high point in Mesa Top and drain to the east over the proposed bridge crossing of North Beaver Creek and into existing Filing 5 and its downstream facilities.

DESIGN POINT 17 (Q_5 = 1.7 cfs and Q_{100} = 3.4 cfs) is the developed runoff from Basin S, 0.50 acres of a Filing 6 home lots and Mesa Top Drive. A 5' sump inlet will be installed at this location along Mesa Top Drive. The sump inlet will intercept all of this runoff and an 18" RCP (Pipe 29) will convey the water to

an adjacent manhole, combining with Pipes 27 & 28. Pipe 30 (48" RCP Q_5 = 36.2 cfs and Q_{100} = 102.2 cfs) will convey the combined runoff east then south, around Lot 51 and into the Full Spectrum Detention Pond B/Design Point 18. In the event of inlet failure, the emergency overflow path is to overtop the adjacent high point in Mesa Top and drain to the east over the proposed bridge crossing of North Beaver Creek and into existing Filing 5 and its downstream facilities.

DESIGN POINT 18 – FULL SPECTRUM DETENTION AND STORM WATER QUALITY FACLITY 'B' (Q_5 = 66.4 cfs, Q_{100}= 183.5 cfs) is the overall developed runoff into the proposed Detention/Storm Water Quality Facility Pond, including Basin T. Basin T is 1.84 acres of the detention facility and surrounding slope area. This facility is a Private Full Spectrum Extended Detention Basin per the El Paso County & City of Colorado Springs and Urban Drainage and Flood Control District (UDFCD) drainage criteria. The proposed facility was sized utilizing two excel workbooks from UDFCD, UD-BMP version 3.05 and UD-Detention version 3.07. The composite impervious value was determined using Site-Level Low Impact Development (LID) Design Effective Impervious Calculator (IRF Form) located in the Appendix of this report. Also, an exhibit of the tributary area to the pond and the assumed impervious/pervious types is included in the Appendix.

A total of 55.305 acres of Forest Lakes land is tributary to this facility at a calculated imperviousness of 30.4%. The required EURV (Excess Urban Runoff Volume) is 1.732 acre-feet and the proposed top of outlet box at an elevation of 7059.40 (micropool w.s.e./start of SWQ = 7053.40) provides a EURV of 1.83 acre-feet. Concrete forebay structures (12" tall walls w/notch) will be installed at the two pipe entry points into the proposed detention/water quality facility. A 7' wide low flow concrete trickle channel will be installed from the two proposed forebays at Pipes 14 & 30 to the proposed pond outlet box at a 0.50% minimum slope. Separate UDFCD sizing spreadsheets are included for each pipe entry and forebay sizing (see appendix). The 48" Pipe 30 has a total of 31.17 tributary acres draining to it and thus a minimum forebay volume of 0.012 acre-feet is required. The 42" Pipe 14 has a total of 22.41 tributary acres and a minimum forebay volume of 0.008 acre-feet required. The two proposed forebays are 0.015 acre-feet and 0.010 acre-feet and have rectangular notches to drain into the trickle channel (9.8" for Pipe 30 forebay, and 8.0" for Pipe 14 forebay).

Update. The latest version is MH-Detention v4.03 (released May 2020)

A 5' wide outlet box (4' deep opening) is proposed with a top of box at 7059.40 elevation. For a Full Spectrum facility, the outlet box orifice hole within the front plate is to drain the EURV in less than 72 hours. Per the latest UD-Detention version 3.07 spreadsheet from Urban Drainage (release February 2017) a total of (3) orifice holes are to be installed in the front plate of the outlet box with the bottom orifice hole of 2.5" wide x 1" high, and middle orifice of 3" wide x 2" high, and upper orifice of 4" wide x 2" high. A 2.5' deep concrete bottom micropool is to be installed within the wing walls of the outlet structure, with a surface area of 270 square feet. An initial surcharge depth of 4" will be provided within the micropool outlet structure. A removable trash screen of 12" in width will be placed in front of the orifice plate to help prevent the orifice holes from clogging. A 30" RCP outlet pipe (Pipe 31) will convey the detained release (Q_5 = 0.9 cfs, Q_{100}= 60.0 cfs, 100-yr water surface elevation of 7062.33, UD-Detention) to the existing Beaver Creek corridor located directly south and east of Filing 6. Impact structure/energy dissipation will be installed at the end of this 30" outfall pipe and just outside of the US Corps of Engineers Jurisdictional Wetlands limits. A Bentley Flowmaster analysis is included in the appendix showing a non-erosive velocity at or less than 5 ft/sec downstream of the concrete impact structure along the native ground and drainage pattern. For conservative purposes, n coefficients between 0.03 to 0.05 were used in the cross sections downstream of the pipe outfall (Pipe 31) and have a velocity in the section less than 5 ft/sec (non-erosive). Therefore, additional downstream protection is not needed. This facility restricts the release to pre-development (historic levels) per the UD-Detention spreadsheet and the direct comparison to Existing Conditions Design Point 4 (Q_5 = 10.7 cfs and Q_{100} = 72.1 cfs).

A 36' length riprap emergency spillway located at elevation 7062.60 will pass the entire incoming 100-year storm event at a flood depth of 0.95' in case of complete outlet box and pipe failure. Per the Drainage Criteria Manual (DCM), the top of the pond berm shall be minimum 2.0' higher than the flood depth water surface elevation. The proposed 12' wide top of berm elevation is at 7066.00. This emergency spillway will only be utilized in the case of a complete outlet box failure, and will drain directly into the wetlands, open space, and Beaver Creek corridor. A 15' wide maintenance access road at 12% max. grade will be installed to the bottom of the facility as per the DCM.

This facility adequately treats all 55.31 acres of Forest Lakes developed flows for storm water quality and detains the release to below historic rates. Per the Code of Colorado Regulations 4.2.5.1 a Jurisdictional Size Dam height is measured, either from the invert of the outlet pipe at the longitudinal centerline of the embankment (spillway elevation = 7062.60 & 30" invert at centerline of dam is 7053.03, 9.57') or the spillway elevation compared to the existing ground at the centerline (spillway elevation = 7062.60 & existing ground 7053.00, 9.6'). A dam height of 10' or below is not considered a 'Jurisdictional' facility with the State of Colorado. Therefore, this is a non-jurisdictional size dam and additional documentation/coordination with the State Engineer, beyond the typical non-jurisdictional form, is not required for the proposed facility. Maintenance and ownership of the Private detention/water quality facility and the entire proposed storm sewer is by the Forest Lakes Metropolitan District. An El Paso County Detention Pond Maintenance Agreement will be required indicating these Facilities to be ultimately owned and maintained by the Metro District.

BASIN U (Q_5 = 1.3 cfs and Q_{100} = 3.6 cfs) is 0.92 acres of the rear yards and portions of Filing 6 home lots that drain directly south into the existing Beaver Creek drainage corridor. The majority of this basin is slope area and landscaped back yards with minimal impervious surfaces within (concrete, roof tops). This runoff will not concentrate and will 'sheet flow' into the native ground and non-erosion velocities. Also this flow does not need to drain into Pond B as there is over 300' length of natural/open space prior to the floodplain limits of Beaver Creek. A PUD Modification was granted for such 'back yard' release and a copy is included in the Appendix of this report.

DESIGN POINT 19 (Q_5 = 2.9 cfs and Q_{100} = 9.9 cfs) is the developed runoff from Basins Z1 & Z2 that drains as surface flow off the end of Mesa Top Drive and into future Filing 7 development area. Basin Z1 is 1.30 acres of water tank, access road, and surrounding slope/open space that drains south-east onto Mesa Top Drive. The proposed tank access road is to be gravel except the last 50' as it approaches Mesa Top Drive will be constructed of concrete. A rock ditch/swale is required adjacent to this gravel road that will limit erosion. This rock swale is to be 1.0' bottom width, with 3:1 side slope (6" deep). Any size rock larger than D50 = 2" will be suitable for such a swale. A 2.0' curb chase will route this runoff under the Mesa Top attached walk and into the street curb and gutter. Basin Z2 is 1.39 acres of a large lot (Lot 23) and small portion of Mesa Top Drive that drains south to the end of the proposed roadway. A riprap

rundown will be installed at the end of this roadway that will route the developed runoff into a 1.5' deep stilling basin allowing water to trickle out at a slow rate/velocity into the existing ground and future roadway connection. The rundown will begin at 30' width (matching edge of pavement) but will quickly reduce to 10' width as it drops into the 1.5' deep stilling basin (D50 = 4" riprap minimum). This runoff continues south along future development area for approximately 1,600 feet until it reaches the temporary sediment basin (TSB) installed with the Forest Lakes Early Grading Plan/Permit. This temporary sediment basin is in the location of the future Full Spectrum Detention and Water Quality Pond A, to be constructed with Filing 7 development. Demand for homes is incredibly high in Forest Lakes and the owner/developer plans to move directly into Filing 7 construction once Filing 6 is completed. With the amount of overland buffer between Design Point 19 and the TSB outfall into Beaver Creek, installation of a permanent BMP with Filing 6 is not warranted. The permanent BMP (Pond A) will be installed in the near future with Filing 7.

DESIGN POINT EX-1 (Q_5 = 1,047 cfs and Q_{100} = 3,123 cfs) is the same as in the Existing Conditions portion of this report and is the overall runoff within North Beaver Creek channel as defined by the M.D.D.P.

DESIGN POINT EX-2 (Q_5 = 5.1 cfs and Q_{100} = 25.8 cfs) is the existing conditions runoff from Basin OS-3 and the developed Basin W. Basin OS-3 is as described in the Existing Condition portion. Basin W is 4.70 acres of open space and very large lot development (Lots 21-22). Basin W is similar to Basin EX-D, but is of less size due to the installation of the proposed roadway (Mesa Top Drive). A very small portion of these lots will be developed with 'impervious' surfaces and all runoff will be directed over the vast amount of open space and natural drainage corridors. This runoff continues east into Basin X and the North Beaver Creek corridor to Design Point EX-3.

DESIGN POINT EX-3 (Q_5 = 18.0 cfs and Q_{100} = 111.2 cfs) is the developed conditions runoff draining into North Beaver Creek from just Forest Lakes on-site basins and immediately tributary area. This runoff is not the total amount within the channel as that is represented by DP-1 and the previously approved MDDP. Specifically, this runoff is that from Design Point 2 and Basins OS-2, Y, and X. Basin OS-2 is 19.91 acres of an existing 40-acre, one owner, home lot that sits north of Forest Lakes and drains south onto Basin Y (Basin EX-B in Existing Conditions). Basin Y is 8.62 acres of onsite Forest Lakes land that combines

Provide a statement that Basins X & Y consist of large lot single family sites, stream stabilization sites and trails which are excluded from permanent water quality per ECM Appendix I Section I.7.1.B.5, Section I.7.1.B.5.8, and Section I.7.1.B.9

with the OS-2 runoff and drains south, along North Beaver Creek but not into the main channel until the southern tip of the Basin limits. This basin will remain in the existing, natural condition except for the one single Lot 3 home development. Basin X (similar to Basin EX-A in Existing Conditions) is 20.25 acres of onsite Filing 6 property that includes the North Beaver Creek. This basin will remain undeveloped as permanent open space. This total Forest Lakes and direct tributary area runoff rate is less than in the Existing Conditions (Q_5 = 19.7 cfs, Q_{100}= 132.1 cfs). Any future development of the off-site tributary area will be required to provide on-site detention and water quality facilities prior to releasing into North Beaver Creek. As this runoff rate is lower, due to the truncation of on-site tributary area to Pond B, no additional improvements are required along North Beaver and Beaver Creeks.

STORMWATER QUALITY (FOUR STEP PROCESS)

El Paso County requires the Four Step Process for receiving water protection that focuses on reducing runoff volumes, treating the water quality capture volume (WQCV), stabilizing drainage ways, and implementing long-term source controls. The Four Step Process pertains to management of smaller, frequently occurring storm events, as opposed to larger storms for which drainage and flood control infrastructure are sized. Implementation of these four steps to achieve stormwater permit requirements is required. The site adheres to this Four Step Process as follows:

1. All developed runoff from the proposed site will be collected in the proposed storm system and routed to one proposed permanent full spectrum detention and water quality facility (Pond B). Individual home roof downspouts will be directed onto pervious landscape areas. The additional grass buffer BMP provides the following: 1) Minimize directly connected impervious areas. 2) Provides initial pollutant and sediment removal before entering the storm system. Rear yard flows of those proposed lots adjacent to public streets will be directed over a grass buffer area (both landscaped and native grasses) to provide treatment of these small rear year areas.

2. The proposed Pond B provides Detention and Stormwater Quality Treatment for the entirety of the proposed development. The facilities in conjunction with Step 1 implementation above will address all required Water Quality Capture Volume and Slow Release Requirements.

3. The recipient of the drainage flows from the site is Beaver Creek, with an estimated 100-year storm runoff rate of 15,480 cfs to 16,190 cfs. This portion of the creek also contains Preble's Jumping Mouse habitat limits, 100-year FEMA floodplain, and jurisdictional wetlands. As such the downstream corridor is very well established and as the detained developed release rate is far less than historic, theoretically no additional erosion will occur.

Revise Step 4. This should be n/a since this is not an industrial or commercial site.

4. A site-specific stormwater quality and erosion control plan and narrative has been submitted and approved by County Engineering with the Early Grading Plan. Details such as site-specific source control construction BMPs as well as permanent BMPs are detailed in this plan and narrative to protect receiving waters. Such construction BMPs include temporary sediment basins, inlet protection, silt fence, vehicle tracking control, and concrete washout areas.

Step 4: Consider Need for Industrial and Commercial BMPs

If a new development or significant redevelopment activity is planned for an industrial or commercial site, the need for specialized BMPs must be considered. Two approaches are described in the New Development BMP Factsheets:

- Covering of Storage/Handling Areas
- Spill Containment and Control

Other Specialized BMPs may also be required

DRAINAGE AND BRIDGE FEE

Forest Lakes Filings 6 is wit ounty Drainage Fees, the Beaver Creek drainage fee is $11,409 per impervious acre of development. Within the Filing 6 boundary 79.168 acres is subject to basin fees, as 1.716 acres was already platted with Filing 5. The 79.168 acres consists of; 27.411 acres of large lots (over 1 acre), 14.305 acres of typical home lots, 6.772 acres of right-of-way (roads), and 30.680 acres of open space/undeveloped area. For the 6 large home lots consisting of 27.411 acres total, it's estimated that four of these will have impervious 'footprints' of approximately 10,000 SF each, and two of the lots will have approximately 15,250 SF each (total of 1.618 impervious acres). Using Table 6-6 of the DCM, specifically 65% imperviousness for typical home lots, 100% imperviousness for pavement/right-of-way, and 0% imperviousness for open space/undeveloped area; an overall Filing 6 impervious area is calculated at 17.688 acres. Bridge Fees are not required for miscellaneous drainage basins.

FILING 6 (17.688 Impervious acres)

DRAINAGE FEE:

$11,409/acre x 17.688 acres	$ 201,802.39

Being reviewed by the Engineering Manager.

Based upon a review of the prior and current drainage fee off-sets / credits as well as drainage fees paid, with the El Paso County Engineering Review Manager in associated with the Filing No. 5 Final Drainage Report, the following summary of platting activity for this community was:

The current available drainage fee credit is $301,462.16 per the approved fil. No. 5 Final Drainage Report. Using this amount to off-set the Filing No. 6 drainage fees leaves $99,659.77 for future use in addition to the 50% pond cost for the detention facility being built with Filing No. 6 (50% of $145,000.00 = $72,500.00) for a total of $172,159.77 to be used with future Filing No. 7.

Forest Lakes Fees

Project No. (plat no.)	Filing No.	on plat	date of plat	fees due in FDR	date of FDR	credits per FDR / agreement	Onset credit used	Paid in cash	credit remaining:
SF03036 (12407)	1 (no number)	zero	August 29, 2006	$ 64,731.94	September 8, 2004	$ 234,000.00	$ 64,731.94	$ -	$ 169,268.06
SF06029 (12747)	3	zero	january 25,2008	$ 79,342.54	January 12, 2007		$ 79,342.54	$ -	$ 89,925.52
SF1527 (13884)	2A	$ 3,144.38	December 21, 2016	$ 93,069.90	August 8, 2016		$ 89,925.52	$ 3,144.38	$ -
SF1528 (14065)	2B	$73,582.44	December 5, 2017	$ 73,582.44	August 8, 2016		$ -	$73,582.44	$ -
SF1817 (14263)	4	$50,387.18	December 18, 2018	$ 50,387.18	July 19, 2018		$ -	$50,387.18	$ -
SF1519	fil 1 amended	na			Octoer 20, 2015	$ 271,388.50			$ 271,388.50
	5	na	July 13, 2020	$115,426.34	June 9, 2020	$ 145,500.00	$ 115,426.34		$ 301,462.16

Add Filing 5 Project No (Plat) = SF1915 (14540)

SUMMARY

Developed runoff from the proposed Forest Lakes Filing 6 is proposed to outfall to one proposed private Full Spectrum Detention (EDB) and Storm Water Quality Facility (owned and maintained by the Forest Lakes Metropolitan District) prior to discharging to downstream facilities. The proposed Full Spectrum detention & water quality pond was sized using the current and applicable drainage criteria and provides release rates below existing allowable release rates. Therefore, the developed site runoff and proposed storm sewer facilities will not adversely affect the downstream facilities or surrounding developments.

PREPARED BY:

Matthew Larson
Project Manager

mal/117560/FDR-FILING6.doc

REFERENCES

1. City of Colorado Springs and El Paso County Drainage Criteria Manual Volume 1, May 2014.
2. Drainage Criteria Manual (Volume 3) latest revision April 2008, Urban Drainage and Flood Criteria District.
3. "Forest Lakes Master Development Drainage Plan," by Kiowa Engineering Corporation, revised April 11, 2002.
4. "Preliminary and Final Drainage Report Forest Lakes Subdivision Filing No. 1," by Kiowa Engineering Corporation, filed September 8, 2004.
5. "Drainage Report Amendment for Preliminary and Final Drainage Report Forest Lakes Subdivision Filing No. 1," by Classic Consulting Engineers & Surveyors, LLC, dated August 2015.
6. "Debris Flow/Mudflow Analysis Forest Lakes Subdivision (Phase 2) Lindbergh Road and W. Baptist Road El Paso County, Colorado," by CTL Thompson Inc., dated August 6, 2018.
7. "Master Development Drainage Plan Amendment and Preliminary Drainage Report for Forest Lakes (Filing 5, 6, 7)," by Classic Consulting Engineers & Surveyors LLC, approved April 1, 2019.
8. "Final Drainage Report for Forest Lakes Filing 5," by Classic Consulting Engineers & Surveyors, LLC, approved June 9, 2020.

APPENDIX

FOREST LAKES FILINGS 5, 6 and 7
JUSTIFICATION FOR PUD MODIFICATIONS: Back Yard Drainage – Direct Release

Chapter 4.2.6.F.2.g of the Land Development Code (LDC) allows for a PUD modification of a general development standard in the LDC or criteria of the Engineering Criteria Manual (ECM), provided at least one of the benefits identified in Chapter 4.2.6.F.2.h are met. Section 5.8 of the ECM establishes an additional mechanism whereby an engineering design standard can be modified provided the limits of consideration in ECM Section 5.8.6 are met and the modifications meets the criteria for approval in ECM Section 5.8.7.

Nature of Request:
Section of LDC/ECM from which modification is sought:
ECM Section I.7.2 (APPENDIX I)
Specific Criteria from which modification is sought:
Water Quality Capture Volume Requirements.
Proposed nature and extent of modification:
Allow for direct release across grass buffer (or equivalent) for back yards of proposed single-family subdivision lots.

ECM Section 5.8.6: Limits of Consideration:
The ECM Administrator may only consider a project-specific modification to an existing standard when **one** of the following conditions is met:

- The ECM standard is inapplicable to a particular situation.
  N/A
- Topography, right-of-way, or other geographical conditions or impediments impose an undue economic hardship on the applicant, and an equivalent alternative that can accomplish the same design objective is available and does not compromise public safety or accessibility.
  There is significant topography on this site and the proposed home lots are 'walk-out' lot conditions along natural open space and drainage corridors that contain Preble's Jumping Mouse Habitat and FEMA 100-year floodplain limits. There is limited ability to capture the drainage from the back yards but all roof drains will be routed to front yard and the street eventually to a permanent downstream water quality facility. All major imperviousness (roads, driveways, and rooftops) are all treated by a downstream full spectrum detention and water quality facility. There is a 300'+ buffer between the property line (end of back yards) and the waters of the State of Colorado; and other than a small patio, no additional anticipated imperviousness within the direct release back yard drainage basins.
- A change to a standard is required to address a specific design or construction problem, and if not modified, the standard will impose an undue hardship on the applicant with little or no material benefit to the public.
  Additional permanent water quality facilities would be required to capture all drainage from all of the back yards. As there is limited imperviousness, this runoff should not need detention nor water quality. Therefore, additional facilities to install and maintain would impose unnecessary hardship on the developer and Forest Lakes Metropolitan District.

ECM Section 5.8.7: Criteria for Approval
No modification shall be approved unless it is demonstrated that:

VICINITY MAP

CLASSIC SM
CONSULTING
ENGINEERS & SURVEYORS

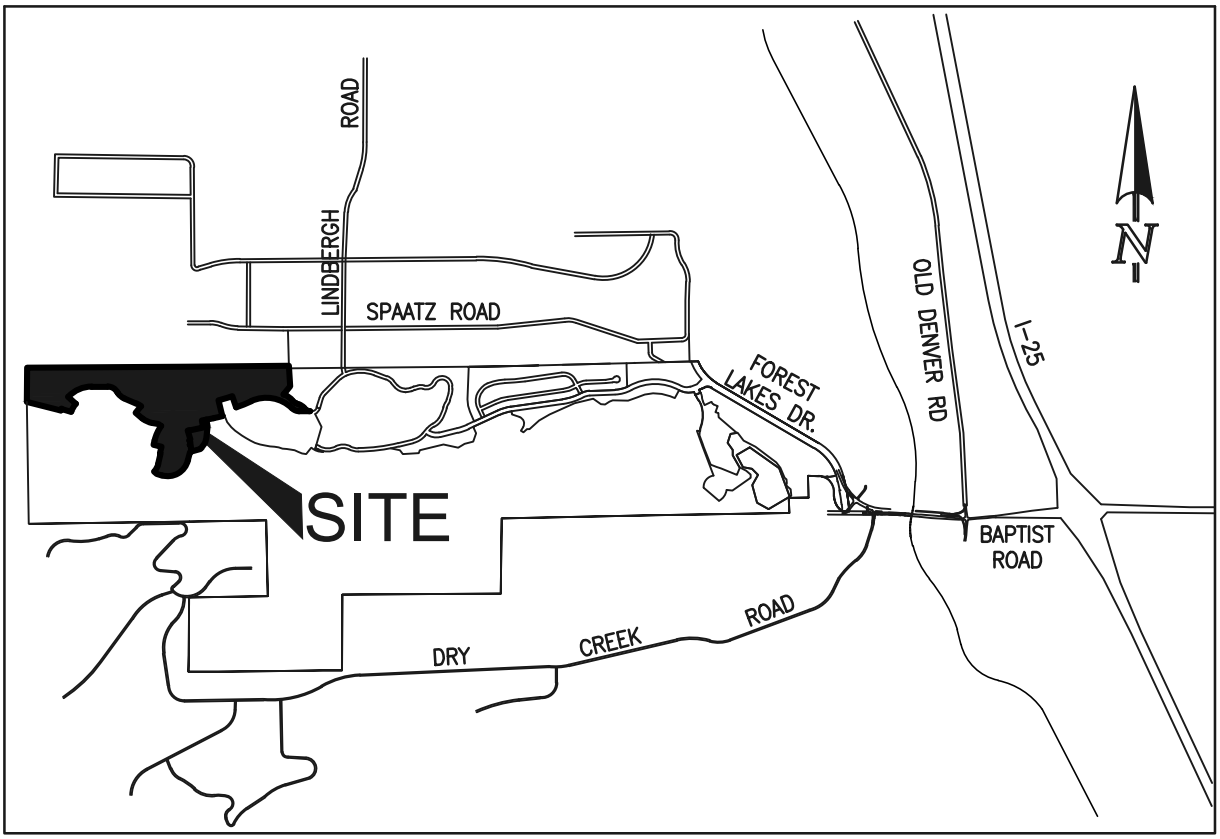

VICINITY MAP

NOT TO SCALE

N:\117560\DRAWINGS\CONSTRUCTION\GRADING-EROSION\01-117560-TITLE.dwg, 10/14/2020 10:30:39 AM, 1:1

SOILS MAP (S.C.S. SURVEY)

CLASSIC SM
CONSULTING
ENGINEERS & SURVEYORS

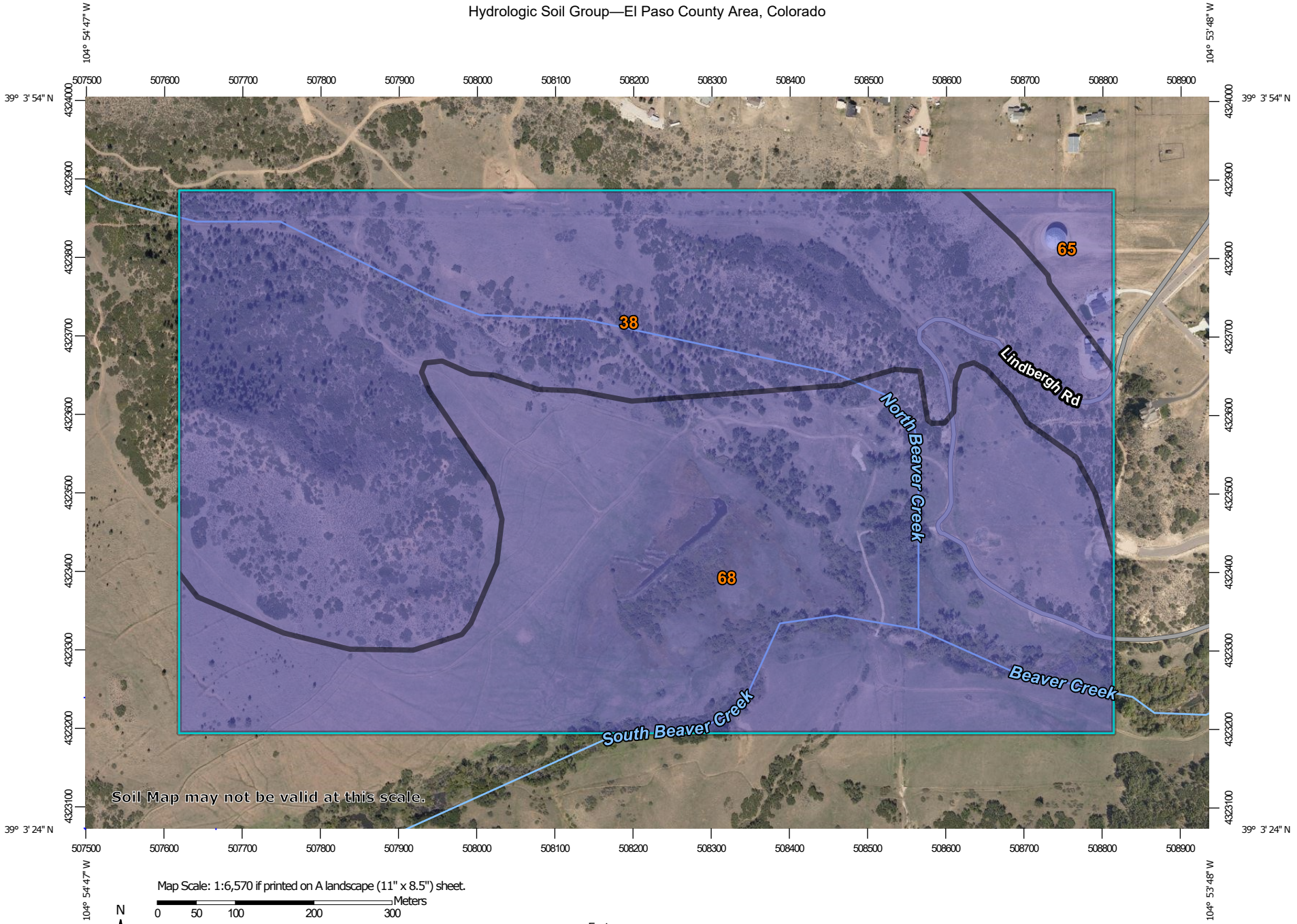

Map Scale: 1:6,570 if printed on A landscape (11" x 8.5") sheet.

N

Meters
0 50 100 200 300

Feet
0 300 600 1200 1800

Map projection: Web Mercator Corner coordinates: WGS84 Edge tics: UTM Zone 13N WGS84

MAP LEGEND

Area of Interest (AOI)

- Area of Interest (AOI)

Soils

Soil Rating Polygons

- A
- A/D
- B
- B/D
- C
- C/D
- D
- Not rated or not available

Soil Rating Lines

- A
- A/D
- B
- B/D
- C
- C/D
- D
- Not rated or not available

Soil Rating Points

- A
- A/D
- B
- B/D
- C
- C/D
- D
- Not rated or not available

Water Features

- Streams and Canals

Transportation

- Rails
- Interstate Highways
- US Routes
- Major Roads
- Local Roads

Background

- Aerial Photography

MAP INFORMATION

The soil surveys that comprise your AOI were mapped at 1:24,000.

Warning: Soil Map may not be valid at this scale.

Enlargement of maps beyond the scale of mapping can cause misunderstanding of the detail of mapping and accuracy of soil line placement. The maps do not show the small areas of contrasting soils that could have been shown at a more detailed scale.

Please rely on the bar scale on each map sheet for map measurements.

Source of Map: Natural Resources Conservation Service
Web Soil Survey URL:
Coordinate System: Web Mercator (EPSG:3857)

Maps from the Web Soil Survey are based on the Web Mercator projection, which preserves direction and shape but distorts distance and area. A projection that preserves area, such as the Albers equal-area conic projection, should be used if more accurate calculations of distance or area are required.

This product is generated from the USDA-NRCS certified data as of the version date(s) listed below.

Soil Survey Area: El Paso County Area, Colorado
Survey Area Data: Version 18, Jun 5, 2020

Soil map units are labeled (as space allows) for map scales 1:50,000 or larger.

Date(s) aerial images were photographed: Aug 19, 2018—Sep 23, 2018

The orthophoto or other base map on which the soil lines were compiled and digitized probably differs from the background imagery displayed on these maps. As a result, some minor shifting of map unit boundaries may be evident.

Hydrologic Soil Group

Map unit symbol	Map unit name	Rating	Acres in AOI	Percent of AOI
38	Jarre-Tecolote complex, 8 to 65 percent slopes	B	101.7	49.6%
65	Perrypark gravelly sandy loam, 3 to 9 percent slopes	B	5.0	2.4%
68	Peyton-Pring complex, 3 to 8 percent slopes	B	98.5	48.0%
Totals for Area of Interest			**205.2**	**100.0%**

Description

Hydrologic soil groups are based on estimates of runoff potential. Soils are assigned to one of four groups according to the rate of water infiltration when the soils are not protected by vegetation, are thoroughly wet, and receive precipitation from long-duration storms.

The soils in the United States are assigned to four groups (A, B, C, and D) and three dual classes (A/D, B/D, and C/D). The groups are defined as follows:

Group A. Soils having a high infiltration rate (low runoff potential) when thoroughly wet. These consist mainly of deep, well drained to excessively drained sands or gravelly sands. These soils have a high rate of water transmission.

Group B. Soils having a moderate infiltration rate when thoroughly wet. These consist chiefly of moderately deep or deep, moderately well drained or well drained soils that have moderately fine texture to moderately coarse texture. These soils have a moderate rate of water transmission.

Group C. Soils having a slow infiltration rate when thoroughly wet. These consist chiefly of soils having a layer that impedes the downward movement of water or soils of moderately fine texture or fine texture. These soils have a slow rate of water transmission.

Group D. Soils having a very slow infiltration rate (high runoff potential) when thoroughly wet. These consist chiefly of clays that have a high shrink-swell potential, soils that have a high water table, soils that have a claypan or clay layer at or near the surface, and soils that are shallow over nearly impervious material. These soils have a very slow rate of water transmission.

If a soil is assigned to a dual hydrologic group (A/D, B/D, or C/D), the first letter is for drained areas and the second is for undrained areas. Only the soils that in their natural condition are in group D are assigned to dual classes.

Rating Options

Aggregation Method: Dominant Condition

Component Percent Cutoff: None Specified

Tie-break Rule: Higher

F.E.M.A. MAP

CLASSIC SM
CONSULTING
ENGINEERS & SURVEYORS

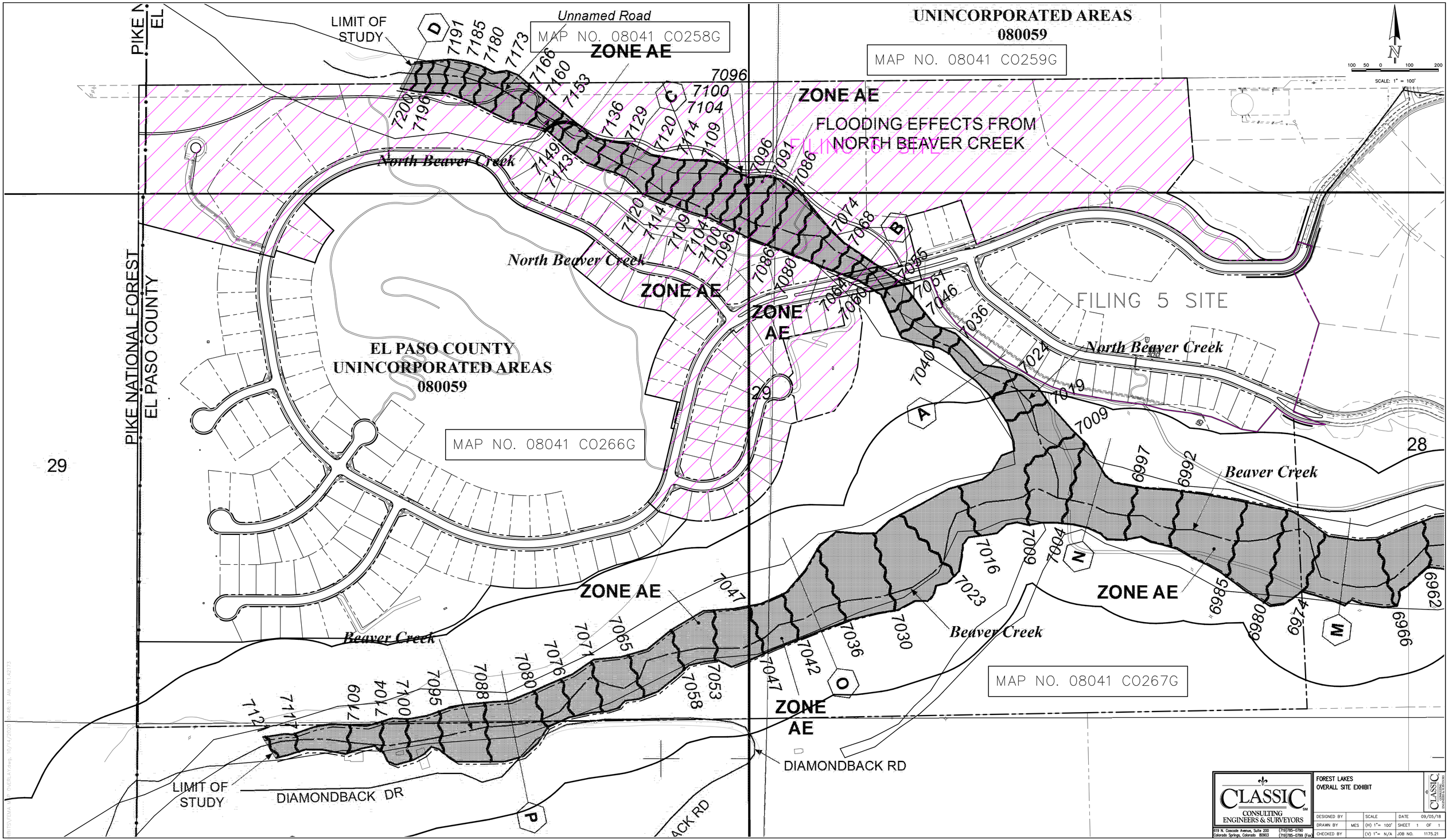

UNINCORPORATED AREAS
080059
MAP NO. 08041 CO259G
MAP NO. 08041 CO258G
MAP NO. 08041 CO266G
MAP NO. 08041 CO267G
Unnamed Road
LIMIT OF STUDY
ZONE AE
FLOODING EFFECTS FROM NORTH BEAVER CREEK
FILING 6 SITE
FILING 5 SITE
North Beaver Creek
Beaver Creek
EL PASO COUNTY
UNINCORPORATED AREAS
080059
PIKE NATIONAL FOREST
EL PASO COUNTY
DIAMONDBACK DR
DIAMONDBACK RD
29
28
SCALE: 1" = 100'
CLASSIC
CONSULTING ENGINEERS & SURVEYORS
619 N. Cascade Avenue, Suite 200
Colorado Springs, Colorado 80903
(719)785-0790
(719)785-0799 (Fax)
FOREST LAKES
OVERALL SITE EXHIBIT
DESIGNED BY
DRAWN BY MES
CHECKED BY
SCALE
(H) 1"= 100'
(V) 1"= N/A
DATE 09/05/18
SHEET 1 OF 1
JOB NO. 1175.21

EXISTING CONDITIONS CALCULATIONS

CLASSIC SM
CONSULTING
ENGINEERS & SURVEYORS

JOB NAME: ***FOREST LAKES FILING NO. 5***
JOB NUMBER: ***1175.50***
DATE: ***06/24/19***
CALCULATED BY: ***MAL***

FINAL DRAINAGE REPORT ~ BASIN RUNOFF COEFFICIENT SUMMARY (EXISTING CONDITIONS)

BASIN	TOTAL AREA (AC)	IMPERVIOUS AREA / STREETS			LOTS/LANDSCAPE/UNDEV. AREAS (NOT PAVEMENT)			WEIGHTED		WEIGHTED CA	
		AREA (AC)	C(5)	C(100)	AREA (AC)	C(5)	C(100)	C(5)	C(100)	CA(5)	CA(100)
OS-1	10.31	0.00	0.90	0.96	10.31	0.09	0.36	0.09	0.36	0.93	3.71
OS-2	19.90	0.00	0.90	0.96	19.90	0.09	0.36	0.09	0.36	1.79	7.16
OS-3	5.04	0.00	0.90	0.96	5.04	0.09	0.36	0.09	0.36	0.45	1.81
EX-A	29.44	0.00	0.90	0.96	29.44	0.09	0.36	0.09	0.36	2.65	10.60
EX-B	8.89	0.00	0.90	0.96	8.89	0.09	0.36	0.09	0.36	0.80	3.20
EX-C	16.54	0.00	0.90	0.96	16.54	0.09	0.36	0.09	0.36	1.49	5.95
EX-D	7.59	0.00	0.90	0.96	7.59	0.09	0.36	0.09	0.36	0.68	2.73
EX-E	33.36	0.00	0.90	0.96	33.36	0.09	0.36	0.09	0.36	3.00	12.01

JOB NAME: FOREST LAKES FILING NO. 6
JOB NUM: **1175.60**
DATE: **9/13/2020**
CALC'D BY: **MAL**

FINAL DRAINAGE REPORT ~ BASIN RUNOFF SUMMARY (EXISTING CONDITIONS)

BASIN	WEIGHTED		OVERLAND				STREET / CHANNEL FLOW				Tc	INTENSITY		TOTAL FLOWS	
	CA(5)	CA(100)	C(5)	Length (ft)	Height (ft)	Tc (min)	Length (ft)	Slope (%)	Velocity (fps)	Tc (min)	TOTAL (min)	I(5) (in/hr)	I(100) (in/hr)	Q(5) (cfs)	Q(100) (cfs)
OS-1	0.93	3.71	0.09	200	60	8.4	210	30.0%	19.2	0.2	8.6	4.36	7.32	4.0	27.2
OS-2	1.79	7.16	0.09	400	60	14.9	450	15.0%	13.6	0.6	15.5	3.47	5.83	6.2	41.8
OS-3	0.45	1.81	0.09	100	50	5.0	600	10.5%	11.3	0.9	5.9	4.92	8.26	2.2	15.0
EX-A	2.65	10.60	0.09	300	24	15.9	2050	5.5%	8.2	4.2	20.1	3.08	5.18	8.2	54.9
EX-B	0.80	3.20	0.09	300	60	11.8	575	5.2%	8.0	1.2	13.0	3.74	6.28	3.0	20.1
EX-C	1.49	5.95	0.09	130	24	7.9	900	7.5%	9.6	1.6	9.5	4.20	7.06	6.3	42.0
EX-D	0.68	2.73	0.09	250	80	9.2	870	10.6%	11.4	1.3	10.5	4.06	6.82	2.8	18.6
EX-E	3.00	12.01	0.09	300	64	11.5	1470	5.7%	8.4	2.9	14.4	3.58	6.01	10.7	72.1

JOB NAME: ***FOREST LAKES FILING NO. 6***
JOB NUMBER: ***1175.60***
DATE: ***09/13/20***
CALCULATED BY: ***MAL***

FINAL DRAINAGE REPORT ~ SURFACE ROUTING SUMMARY (EXISTING CONDITIONS)

Design Point(s)	Contributing Basins	Equivalent CA(5)	Equivalent CA(100)	Maximum Tc	Intensity		Flow		Inlet Size
					I(5)	I(100)	Q(5)	Q(100)	
1	BASIN OS-4 (FROM MDDP)						1047	3123	N. BEAVER CREEK FLOODPLAIN
2	BASIN OS-3 + BASIN EX-D	1.14	4.55	10.5	4.06	6.82	4.6	31.0	SURFACE
3	BASIN OS-2 + BASIN EX-A + BASIN EX-B + DESIGN POINT 2	6.38	25.51	20.1	3.08	5.18	19.7	132.1	N. BEAVER CREEK FLOODPLAIN (FOREST LAKES FLOWS ONLY)
4	BASIN EX-E	3.00	12.01	14.4	3.58	6.01	10.7	72.1	SURFACE
5	BASIN OS-1 + BASIN EX-C	2.42	9.67	10.1	4.11	6.90	9.9	66.7	EX. INLETS/PIPE (FOREST LAKES FIL. 5)

DEVELOPED CONDITIONS CALCULATIONS

CLASSIC SM
CONSULTING
ENGINEERS & SURVEYORS

JOB NAME: ***FOREST LAKES FILING NO. 6***
JOB NUMBER: ***1175.60***
DATE: ***09/13/20***
CALCULATED BY: ***MAL***

FINAL DRAINAGE REPORT ~ BASIN RUNOFF COEFFICIENT SUMMARY (DEVELOPED CONDITIONS)

BASIN	TOTAL AREA (AC)	IMPERVIOUS AREA / STREETS			LOTS/LANDSCAPE/UNDEV. AREAS (NOT PAVEMENT)			WEIGHTED		WEIGHTED CA	
		AREA (AC)	C(5)	C(100)	AREA (AC)	C(5)	C(100)	C(5)	C(100)	CA(5)	CA(100)
A	6.16	0.77	0.90	0.96	5.39	0.31	0.5	0.38	0.56	2.36	3.43
B1	4.69	0.41	0.90	0.96	4.28	0.14	0.39	0.21	0.44	0.97	2.06
B2	3.16	0.17	0.90	0.96	2.99	0.25	0.46	0.28	0.49	0.90	1.54
C	6.00	0.33	0.90	0.96	5.67	0.20	0.43	0.24	0.46	1.43	2.75
D	3.27	0.36	0.90	0.96	2.91	0.20	0.43	0.28	0.49	0.91	1.60
E	5.09	0.32	0.90	0.96	4.77	0.09	0.36	0.14	0.40	0.72	2.02
F1	1.60	0.42	0.90	0.96	1.18	0.45	0.59	0.57	0.69	0.91	1.10
F2	0.91	0.23	0.90	0.96	0.68	0.45	0.59	0.56	0.68	0.51	0.62
G	1.98	0.47	0.90	0.96	1.51	0.45	0.59	0.56	0.68	1.10	1.34
H1	1.23	0.33	0.90	0.96	0.90	0.45	0.59	0.57	0.69	0.70	0.85
H2	2.34	0.35	0.90	0.96	1.99	0.45	0.59	0.52	0.65	1.21	1.51
J	9.56	0.75	0.90	0.96	8.81	0.10	0.37	0.16	0.42	1.56	3.98
K	1.47	0.77	0.90	0.96	0.70	0.34	0.52	0.63	0.75	0.93	1.10
L1	3.68	0.22	0.90	0.96	3.46	0.11	0.37	0.16	0.41	0.58	1.49
L2	4.20	0.33	0.90	0.96	3.87	0.28	0.48	0.33	0.52	1.38	2.17
M	3.66	0.56	0.90	0.96	3.10	0.40	0.56	0.48	0.62	1.74	2.27
N	5.42	0.32	0.90	0.96	5.10	0.18	0.42	0.22	0.45	1.21	2.45
P	1.23	0.58	0.90	0.96	0.65	0.45	0.59	0.66	0.76	0.81	0.94
Q	0.95	0.32	0.90	0.96	0.63	0.38	0.54	0.56	0.68	0.53	0.65
R	0.50	0.25	0.90	0.96	0.25	0.45	0.59	0.68	0.78	0.34	0.39
S	0.50	0.25	0.90	0.96	0.25	0.45	0.59	0.68	0.78	0.34	0.39
T	1.84	0.67	0.90	0.96	1.17	0.23	0.45	0.47	0.64	0.87	1.17
U	0.92	0.00	0.90	0.96	0.92	0.29	0.49	0.29	0.49	0.27	0.45
W	4.70	0.46	0.90	0.96	4.24	0.09	0.36	0.17	0.42	0.80	1.97
X	20.25	0.00	0.90	0.96	20.25	0.09	0.36	0.09	0.36	1.82	7.29
Y	8.62	0.23	0.90	0.96	8.39	0.09	0.36	0.11	0.38	0.96	3.24
Z1	1.30	0.02	0.90	0.96	1.28	0.21	0.44	0.22	0.45	0.29	0.58
Z2	1.39	0.23	0.90	0.96	1.16	0.09	0.36	0.22	0.46	0.31	0.64

JOB NAME: FOREST LAKES FILING NO. 6
JOB NUM: **1175.60**
DATE: **9/13/2020**
CALC'D BY: **MAL**

FINAL DRAINAGE REPORT ~ BASIN RUNOFF SUMMARY (DEVELOPED CONDITIONS)

BASIN	WEIGHTED		OVERLAND				STREET / CHANNEL FLOW				Tc	INTENSITY		TOTAL FLOWS	
	CA(5)	CA(100)	C(5)	Length (ft)	Height (ft)	Tc (min)	Length (ft)	Slope (%)	Velocity (fps)	Tc (min)	TOTAL (min)	I(5) (in/hr)	I(100) (in/hr)	Q(5) (cfs)	Q(100) (cfs)
A	2.36	3.43	0.45	100	3	8.2	1020	7.3%	9.5	1.8	10.0	4.13	6.94	9.8	23.8
B1	0.97	2.06	0.45	100	3	8.2	250	3.2%	6.3	0.7	8.8	4.32	7.25	4.2	14.9
B2	0.90	1.54	0.45	100	3	8.2	225	6.2%	8.7	0.4	8.6	4.36	7.31	3.9	11.3
C	1.43	2.75	0.45	100	3	8.2	450	7.9%	9.8	0.8	8.9	4.30	7.22	6.2	19.9
D	0.91	1.60	0.45	100	3	8.2	290	7.9%	9.8	0.5	8.7	4.35	7.30	3.9	11.7
E	0.72	2.02	0.09	220	58	9.2	300	2.0%	4.9	1.0	10.2	4.10	6.88	2.9	13.9
F1	0.91	1.10	0.45	50	1	6.6	700	8.0%	9.9	1.2	7.8	4.51	7.57	4.1	8.3
F2	0.51	0.62	0.45	50	1	6.6	400	3.0%	6.1	1.1	7.7	4.52	7.59	2.3	4.7
G	1.10	1.34	0.45	50	1	6.6	700	1.6%	4.4	2.6	9.2	4.25	7.13	4.7	9.6
H1	0.70	0.85	0.45	50	1	6.6	530	1.5%	4.3	2.1	8.7	4.34	7.29	3.0	6.2
H2	1.21	1.51	0.45	100	3	8.2	200	1.5%	4.3	0.8	8.9	4.30	7.21	5.2	10.9
J	1.56	3.98	0.45	100	3	8.2	1110	8.5%	10.2	1.8	10.0	4.13	6.94	6.4	27.6
K	0.93	1.10	0.45	50	1	6.6	1110	8.5%	10.2	1.8	8.4	4.39	7.37	4.1	8.1
L1	0.58	1.49	0.09	170	42	8.3	280	10.0%	11.1	0.4	8.7	4.34	7.29	2.5	10.9

JOB NAME: FOREST LAKES FILING NO. 6
JOB NUM: **1175.60**
DATE: **9/13/2020**
CALC'D BY: **MAL**

FINAL DRAINAGE REPORT ~ BASIN RUNOFF SUMMARY (DEVELOPED CONDITIONS)

BASIN	WEIGHTED		OVERLAND				STREET / CHANNEL FLOW				Tc	INTENSITY		TOTAL FLOWS	
	CA(5)	CA(100)	C(5)	Length (ft)	Height (ft)	Tc (min)	Length (ft)	Slope (%)	Velocity (fps)	Tc (min)	TOTAL (min)	I(5) (in/hr)	I(100) (in/hr)	Q(5) (cfs)	Q(100) (cfs)
L2	1.38	2.17	0.45	100	3	8.2	490	7.3%	9.5	0.9	9.0	4.28	7.19	5.9	15.6
M	1.74	2.27	0.45	100	3	8.2	910	7.5%	9.6	1.6	9.7	4.17	7.00	7.3	15.9
N	1.21	2.45	0.45	100	3	8.2	350	1.7%	4.6	1.3	9.4	4.21	7.08	5.1	17.3
P	0.81	0.94	0.45	50	1	6.6	350	1.7%	4.6	1.3	7.9	4.49	7.53	3.7	7.1
Q	0.53	0.65	0.45	100	3	8.2	90	1.5%	4.3	0.3	8.5	4.37	7.34	2.3	4.7
R	0.34	0.39	0.45	100	3	8.2	125	1.5%	4.3	0.5	8.7	4.35	7.30	1.5	2.8
S	0.34	0.39	0.45	50	12	2.9	125	1.5%	4.3	0.5	5.0	5.17	8.68	1.7	3.4
T	0.87	1.17	0.45	60	2	6.1	80	0.5%	2.5	0.5	6.6	4.74	7.96	4.1	9.3
U	0.27	0.45	0.29	50	2	6.5	0	0.5%	2.5	0.0	6.5	4.77	8.00	1.3	3.6
W	0.80	1.97	0.09	250	80	9.2	870	10.6%	11.4	1.3	10.5	4.06	6.82	3.2	13.4
X	1.82	7.29	0.09	300	24	15.9	2050	5.5%	8.2	4.2	20.1	3.08	5.18	5.6	37.7
Y	0.96	3.24	0.09	300	60	11.8	575	5.2%	8.0	1.2	13.0	3.74	6.28	3.6	20.4
Z1	0.29	0.58	0.09	25	4	3.7	450	11.0%	11.6	0.6	5.0	5.17	8.68	1.5	5.1
Z2	0.31	0.64	0.09	100	32	5.8	190	4.4%	7.3	0.4	6.2	4.84	8.12	1.5	5.2

JOB NAME: ***FOREST LAKES FILING NO. 6***
JOB NUMBER: ***1175.60***
DATE: ***09/13/20***
CALCULATED BY: ***MAL***

FINAL DRAINAGE REPORT ~ SURFACE ROUTING SUMMARY (DEVELOPED CONDITIONS)

Design Point(s)	Contributing Basins	Equivalent CA(5)	Equivalent CA(100)	Maximum Tc	Intensity		Flow		Inlet Size
					I(5)	I(100)	Q(5)	Q(100)	
1A	BASIN A	2.36	3.43	10.0	4.13	6.94	9.8	23.8	15' Type R At-Grade (FUT.)
1B	BASIN B1 + FLOW-BY DP-1A	1.11	3.29	10.0	4.13	6.94	4.6	22.9	15' Type R At-Grade (FUT.)
2	BASIN B2 + FLOW-BY DP-1B	0.90	2.67	10.0	4.13	6.94	3.7	18.5	15' Type R At-Grade (FUT.)
3	BASIN C + FLOW-BY DP-2	1.43	3.49	10.0	4.13	6.94	5.9	24.3	15' Type R At-Grade
4	BASIN D + FLOW-BY DP-3	0.90	2.86	10.0	4.13	6.94	3.7	19.8	15' Type R At-Grade
5	BASIN E + FLOW-BY DP-4	0.73	2.88	11.6	3.90	6.55	2.8	18.9	15' Type R SUMP
6A	BASIN F1	0.91	1.10	7.8	4.51	7.57	4.1	8.3	5' Type R At-Grade
6B	BASIN F2 + FLOW BY DP-6A	0.84	1.25	7.8	4.51	7.57	3.8	9.4	10' Type R SUMP
7A	BASIN G	1.10	1.34	9.2	4.25	7.13	4.7	9.6	10' Type R At-Grade
7B	BASIN H1	0.70	0.85	8.7	4.34	7.29	3.0	6.2	10' Type R At-Grade
8	BASIN H2 + FLOW-BY DP-7A + FLOW-BY DP-7B	1.27	1.99	9.2	4.25	7.13	5.4	14.2	15' Type R SUMP
9A	BASIN J	1.56	3.98	10.0	4.13	6.94	6.4	27.6	15' Type R At-Grade
9B	BASIN L1 + FLOW-BY DP-9A	0.58	3.11	10.0	4.13	6.94	2.4	21.6	15' Type R At-Grade

JOB NAME: ***FOREST LAKES FILING NO. 6***
JOB NUMBER: ***1175.60***
DATE: ***09/13/20***
CALCULATED BY: ***MAL***

FINAL DRAINAGE REPORT ~ SURFACE ROUTING SUMMARY (DEVELOPED CONDITIONS)

Design Point(s)	Contributing Basins	Equivalent CA(5)	Equivalent CA(100)	Maximum Tc	Intensity		Flow		Inlet Size
					I(5)	I(100)	Q(5)	Q(100)	
10	BASIN K	0.93	1.10	8.4	4.39	7.37	4.1	8.1	15' Type R At-Grade
11	BASIN M + FLOW-BY DP-10	1.74	2.30	9.7	4.17	7.00	7.3	16.1	15' Type R At-Grade
12	BASIN L2 + FLOW-BY DP-9B	1.38	3.16	10.0	4.13	6.94	5.7	21.9	15' Type R At-Grade
13	BASIN N	1.21	2.45	9.4	4.21	7.08	5.1	17.3	15' Type R At-Grade
14	BASIN P	0.81	0.94	7.9	4.49	7.53	3.7	7.1	10' Type R SUMP
15	BASIN Q + FLOW-BY DP-11 + FLOW-BY DP-12 + FB DP-13	0.53	2.82	11.6	3.90	6.56	2.1	18.5	15' Type R SUMP
16	BASIN R	0.34	0.39	8.7	4.35	7.30	1.5	2.8	5' Type R SUMP
17	BASIN S	0.34	0.39	5.0	5.17	8.68	1.7	3.4	5' Type R SUMP
18	BASIN T + PIPE 14 + PIPE 30	17.84	29.40	11.6	3.90	6.55	69.6	192.5	POND
19	BASIN Z1 + BASIN Z2	0.60	1.22	6.2	4.84	8.12	2.9	9.9	SURFACE
EX-1	BASIN OS-4 (FROM MDDP)						1047.0	3123.0	N. BEAVER CREEK
EX-2	BASIN OS-3 + BASIN W	1.25	3.78	10.5	4.06	6.82	5.1	25.8	SURFACE
EX-3	BASIN OS-2 + BASIN Y + BASIN X + DESIGN POINT EX-2	5.82	21.48	20.1	3.08	5.18	18.0	111.2	N. BEAVER CREEK (FOREST LAKES ONLY)

JOB NAME: ***FOREST LAKES FILING NO. 6***
JOB NUMBER: ***1175.60***
DATE: ***09/13/20***
CALCULATED BY: ***MAL***

* PIPES ARE LISTED AT MAXIMUM SIZE REQUIRED TO ACCOMMODATE Q100 FLOWS AT MINIMUM GRADE.
REFER TO INDIVIDUAL PIPE SHEETS FOR HYDRAULIC INFORMATION.

FINAL DRAINAGE REPORT ~ PIPE ROUTING SUMMARY (DEVELOPED CONDITIONS)

Pipe Run	Contributing Basins	Equivalent CA(5)	Equivalent CA(100)	Maximum Tc	Intensity		Flow		
					I(5)	I(100)	Q(5)	Q(100)	Pipe Size*
1	DP-1A (Intercepted)	2.23	2.20	10.0	4.13	6.94	9.2	15.3	24"
2	DP-1B (Intercepted)	1.11	2.16	10.0	4.13	6.94	4.6	15.0	24"
3	DP-2 (Intercepted)	0.90	1.93	10.0	4.13	6.94	3.7	13.4	24"
4	DP-3 (Intercepted)	1.43	2.23	10.0	4.13	6.94	5.9	15.5	24"
5	DP-4 (Intercepted)	0.89	2.00	10.0	4.13	6.94	3.7	13.9	24"
6A	DP-6A (Intercepted)	0.58	0.48	7.8	4.51	7.57	2.6	3.6	18"
6B	PIPE 4 + PIPE 5 + PIPE 6A	2.91	4.71	10.0	4.13	6.94	12.0	32.7	30"
7	DP-5	0.73	2.88	11.6	3.90	6.55	2.8	18.9	24"
8	DP-6	0.91	1.10	7.8	4.51	7.57	4.1	8.3	18"

JOB NAME: ***FOREST LAKES FILING NO. 6***
JOB NUMBER: ***1175.60***
DATE: ***09/13/20***
CALCULATED BY: ***MAL***

* PIPES ARE LISTED AT MAXIMUM SIZE REQUIRED TO ACCOMMODATE Q100 FLOWS AT MINIMUM GRADE.
REFER TO INDIVIDUAL PIPE SHEETS FOR HYDRAULIC INFORMATION.

FINAL DRAINAGE REPORT ~ PIPE ROUTING SUMMARY (DEVELOPED CONDITIONS)

Pipe Run	Contributing Basins	Equivalent CA(5)	Equivalent CA(100)	Maximum Tc	Intensity		Flow		
					I(5)	I(100)	Q(5)	Q(100)	Pipe Size*
9	PIPE 6B + PIPE 7 + PIPE 8	4.54	8.69	11.6	3.90	6.55	17.7	56.9	36"
10	DP-7A (Intercepted)	1.06	0.97	9.2	4.25	7.13	4.5	6.9	18"
11	DP-7B (Intercepted)	0.69	0.74	8.7	4.34	7.29	3.0	5.4	18"
12	PIPE 9 + PIPE 10 + PIPE 11	6.29	10.40	11.6	3.90	6.55	24.5	68.1	42"
13	DP-8	1.27	1.99	9.2	4.25	7.13	5.4	14.2	24"
14	PIPE 12 + PIPE 13	7.56	12.39	11.6	3.90	6.55	29.5	81.1	42"
15	DP-9A (Intercepted)	1.55	2.36	10.0	4.13	6.94	6.4	16.4	24"
16	DP-10 (Intercepted)	0.93	1.07	8.4	4.39	7.37	4.1	7.9	18"
17	PIPE 15 + PIPE 16	2.49	3.44	10.0	4.13	6.94	10.3	23.8	24"
18	DP-9B (Intercepted)	0.58	2.12	10.0	4.13	6.94	2.4	14.7	24"
19	PIPE 17 + PIPE 18	3.07	5.56	10.3	4.09	6.86	12.5	38.1	30"
20	DP-11 (Intercepted)	1.74	1.79	9.7	4.17	7.00	7.3	12.5	24"

JOB NAME: ***FOREST LAKES FILING NO. 6***
JOB NUMBER: ***1175.60***
DATE: ***09/13/20***
CALCULATED BY: ***MAL***

* PIPES ARE LISTED AT MAXIMUM SIZE REQUIRED TO ACCOMMODATE Q100 FLOWS AT MINIMUM GRADE.
REFER TO INDIVIDUAL PIPE SHEETS FOR HYDRAULIC INFORMATION.

FINAL DRAINAGE REPORT ~ PIPE ROUTING SUMMARY (DEVELOPED CONDITIONS)

Pipe Run	Contributing Basins	Equivalent CA(5)	Equivalent CA(100)	Maximum Tc	Intensity		Flow		Pipe Size*
					I(5)	I(100)	Q(5)	Q(100)	
21	DP-12 (Intercepted)	1.38	2.12	10.0	4.13	6.94	5.7	14.7	24"
22	PIPE 19 + PIPE 20 + PIPE 21	6.19	9.46	10.7	4.02	6.76	24.9	63.9	42"
23	DP-13 (Intercepted)	1.21	1.84	9.4	4.21	7.08	5.1	13.0	18"
24	PIPE 22 + PIPE 23	7.40	11.30	10.8	4.02	6.74	29.7	76.2	42"
25	DP-14	0.81	0.94	7.9	4.49	7.53	3.7	7.1	18"
26	DP-15	0.53	2.82	11.6	3.90	6.56	2.1	18.5	24"
27	PIPE 24 + PIPE 25 + PIPE 26	8.74	15.06	11.6	3.90	6.56	34.1	98.7	48"
28	DP-16	0.34	0.39	8.7	4.35	7.30	1.5	2.8	18"
29	DP-17	0.34	0.39	5.0	5.17	8.68	1.7	3.4	18"
30	PIPE 27 + PIPE 28 + PIPE 29	9.41	15.83	12.1	3.84	6.45	36.2	102.2	48"
31	POND B OUTFALL	0.25	9.62	11.6	3.90	6.55	1.0	63.0	30"

JOB NAME:	***FOREST LAKES FILING NO. 6***
JOB NUMBER:	***1175.60***
DATE:	***09/13/20***
CALCULATED BY:	***MAL***

At-Grade Inlet - Flow Routing

Design Point	TOTAL						INTERCEPTED				FLOW-BY			
	CA5	CA100	I5	I100	Q5	Q100	Q5	Q100	CA5	CA100	Q5	Q100	CA5	CA100
1A	2.36	3.43	4.13	6.94	9.8	23.8	9.2	15.3	2.23	2.20	0.6	8.5	0.14	1.23
1B	1.11	3.29	4.13	6.94	4.6	22.9	4.6	15.0	1.11	2.16	0.0	7.9	0.00	1.13
2	0.90	2.67	4.13	6.94	3.7	18.5	3.7	13.4	0.90	1.93	0.0	5.1	0.00	0.74
3	1.43	3.49	4.13	6.94	5.9	24.3	5.9	15.5	1.43	2.23	0.0	8.8	0.00	1.26
4	0.90	2.86	4.13	6.94	3.7	19.8	3.7	13.9	0.89	2.00	0.0	5.9	0.01	0.86
6A	0.91	1.10	4.51	7.57	4.1	8.3	2.6	3.6	0.58	0.48	1.5	4.7	0.33	0.62
7A	1.10	1.34	4.25	7.13	4.7	9.6	4.5	6.9	1.06	0.97	0.2	2.7	0.04	0.37
7B	0.70	0.85	4.34	7.29	3.0	6.2	3.0	5.4	0.69	0.74	0.0	0.8	0.01	0.11
9A	1.56	3.98	4.13	6.94	6.4	27.6	6.4	16.4	1.55	2.36	0.0	11.2	0.00	1.62
9B	0.58	3.11	4.13	6.94	2.4	21.6	2.4	14.7	0.58	2.12	0.0	6.9	0.00	0.99
10	0.93	1.10	4.39	7.37	4.1	8.1	4.1	7.9	0.93	1.07	0.0	0.2	0.00	0.03
11	1.74	2.30	4.17	7.00	7.3	16.1	7.3	12.5	1.74	1.79	0.0	3.6	0.00	0.52
12	1.38	3.16	4.13	6.94	5.7	21.9	5.7	14.7	1.38	2.12	0.0	7.2	0.00	1.04
13	1.21	2.45	4.21	7.08	5.1	17.3	5.1	13.0	1.21	1.84	0.0	4.3	0.00	0.61

JOB NAME:	***FOREST LAKES FILING NO. 6***
JOB NUMBER:	***1175.60***
DATE:	***09/13/20***
CALCULATED BY:	***MAL***

FINAL DRAINAGE REPORT ~ PIPE TRAVEL TIMES

PIPE RUN	STREET / CHANNEL FLOW				
	Pipe Diameter *(ft)*	Length *(ft)*	Slope *(%)*	Velocity *(fps)*	Tc *(min)*
17	2.0	365	7.0%	19.1	0.3
19	2.5	573	7.0%	22.2	0.4
22	3.5	38	1.0%	10.5	0.1
24	3.5	147	0.6%	8.1	0.3
27	4.0	237	0.5%	8.1	0.5
30	4.0	345	0.5%	8.1	0.7

Version 4.05 Released March 2017

INLET MANAGEMENT

Worksheet Protected

INLET NAME	DP-1A INLET	DP-1B INLET	DP-2 INLET	DP-3 INLET	DP-4 INLET	DP-5 INLET
Site Type (Urban or Rural)	URBAN	URBAN	URBAN	URBAN	URBAN	URBAN
Inlet Application (Street or Area)	STREET	STREET	STREET	STREET	STREET	STREET
Hydraulic Condition	On Grade	On Grade	On Grade	On Grade	On Grade	In Sump
Inlet Type	CDOT Type R Curb Opening	CDOT Type R Curb Opening	CDOT Type R Curb Opening	CDOT Type R Curb Opening	CDOT Type R Curb Opening	CDOT Type R Curb Opening

USER-DEFINED INPUT

User-Defined Design Flows

Minor Q_{Known} (cfs)	9.8	4.0	3.7	5.9	3.7	2.8
Major Q_{Known} (cfs)	23.8	14.4	10.6	19.2	11.0	13.0

Bypass (Carry-Over) Flow from Upstream

Receive Bypass Flow from:	No Bypass Flow Received	User-Defined	User-Defined	User-Defined	User-Defined	User-Defined
Minor Bypass Flow Received, Q_b (cfs)	0.0	0.6	0.0	0.0	0.0	0.0
Major Bypass Flow Received, Q_b (cfs)	0.0	8.5	7.9	5.1	8.8	5.9

Watershed Characteristics

Subcatchment Area (acres)						
Percent Impervious						
NRCS Soil Type						

Watershed Profile

Overland Slope (ft/ft)						
Overland Length (ft)						
Channel Slope (ft/ft)						
Channel Length (ft)						

Minor Storm Rainfall Input

Design Storm Return Period, T_r (years)						
One-Hour Precipitation, P_1 (inches)						

Major Storm Rainfall Input

Design Storm Return Period, T_r (years)						
One-Hour Precipitation, P_1 (inches)						

CALCULATED OUTPUT

Minor Total Design Peak Flow, Q (cfs)	**9.8**	**4.6**	**3.7**	**5.9**	**3.7**	**2.8**
Major Total Design Peak Flow, Q (cfs)	**23.8**	**22.9**	**18.5**	**24.3**	**19.8**	**18.9**
Minor Flow Bypassed Downstream, Q_b (cfs)	0.6	0.0	0.0	0.0	0.0	N/A
Major Flow Bypassed Downstream, Q_b (cfs)	8.5	7.9	5.1	8.8	5.9	N/A

Minor Storm (Calculated) Analysis of Flow Time

C	N/A	N/A	N/A	N/A	N/A	N/A
C_5	N/A	N/A	N/A	N/A	N/A	N/A
Overland Flow Velocity, Vi	N/A	N/A	N/A	N/A	N/A	N/A
Channel Flow Velocity, Vt	N/A	N/A	N/A	N/A	N/A	N/A
Overland Flow Time, Ti	N/A	N/A	N/A	N/A	N/A	N/A
Channel Travel Time, Tt	N/A	N/A	N/A	N/A	N/A	N/A
Calculated Time of Concentration, T_c	N/A	N/A	N/A	N/A	N/A	N/A
Regional T_c	N/A	N/A	N/A	N/A	N/A	N/A
Recommended T_c	N/A	N/A	N/A	N/A	N/A	N/A
T_c selected by User	N/A	N/A	N/A	N/A	N/A	N/A
Design Rainfall Intensity, I	N/A	N/A	N/A	N/A	N/A	N/A
Calculated Local Peak Flow, Q_p	N/A	N/A	N/A	N/A	N/A	N/A

Major Storm (Calculated) Analysis of Flow Time

C	N/A	N/A	N/A	N/A	N/A	N/A
C_5	N/A	N/A	N/A	N/A	N/A	N/A
Overland Flow Velocity, Vi	N/A	N/A	N/A	N/A	N/A	N/A
Channel Flow Velocity, Vt	N/A	N/A	N/A	N/A	N/A	N/A
Overland Flow Time, Ti	N/A	N/A	N/A	N/A	N/A	N/A
Channel Travel Time, Tt	N/A	N/A	N/A	N/A	N/A	N/A
Calculated Time of Concentration, T_c	N/A	N/A	N/A	N/A	N/A	N/A
Regional T_c	N/A	N/A	N/A	N/A	N/A	N/A
Recommended T_c	N/A	N/A	N/A	N/A	N/A	N/A
T_c selected by User	N/A	N/A	N/A	N/A	N/A	N/A
Design Rainfall Intensity, I	N/A	N/A	N/A	N/A	N/A	N/A
Calculated Local Peak Flow, Q_p	N/A	N/A	N/A	N/A	N/A	N/A

Version 4.05 Released March 2017

INLET MANAGEMENT

Worksheet Protected

INLET NAME	DP-6B INLET	DP-7A INLET	DP-7B INLET	DP-8 INLET	DP-9A INLET	DP-10 INLET
Site Type (Urban or Rural)	URBAN	URBAN	URBAN	URBAN	URBAN	URBAN
Inlet Application (Street or Area)	STREET	STREET	STREET	STREET	STREET	STREET
Hydraulic Condition	In Sump	On Grade	On Grade	In Sump	On Grade	On Grade
Inlet Type	CDOT Type R Curb Opening	CDOT Type R Curb Opening	CDOT Type R Curb Opening	CDOT Type R Curb Opening	CDOT Type R Curb Opening	CDOT Type R Curb Opening

USER-DEFINED INPUT

User-Defined Design Flows

Minor Q_{Known} (cfs)	2.3	4.7	3.0	5.2	6.4	4.1
Major Q_{Known} (cfs)	4.7	9.6	6.2	10.9	27.6	8.1

Bypass (Carry-Over) Flow from Upstream

Receive Bypass Flow from:	User-Defined	No Bypass Flow Received	No Bypass Flow Received	User-Defined	No Bypass Flow Received	No Bypass Flow Received
Minor Bypass Flow Received, Q_b (cfs)	1.5	0.0	0.0	0.2		
Major Bypass Flow Received, Q_b (cfs)	4.7	0.0	0.0	3.3		

Watershed Characteristics

Subcatchment Area (acres)						
Percent Impervious						
NRCS Soil Type						

Watershed Profile

Overland Slope (ft/ft)						
Overland Length (ft)						
Channel Slope (ft/ft)						
Channel Length (ft)						

Minor Storm Rainfall Input

Design Storm Return Period, T_r (years)						
One-Hour Precipitation, P_1 (inches)						

Major Storm Rainfall Input

Design Storm Return Period, T_r (years)						
One-Hour Precipitation, P_1 (inches)						

CALCULATED OUTPUT

Minor Total Design Peak Flow, Q (cfs)	**3.8**	**4.7**	**3.0**	**5.4**	**6.4**	**4.1**
Major Total Design Peak Flow, Q (cfs)	**9.4**	**9.6**	**6.2**	**14.2**	**27.6**	**8.1**
Minor Flow Bypassed Downstream, Q_b (cfs)	N/A	0.2	0.0	N/A	0.0	0.0
Major Flow Bypassed Downstream, Q_b (cfs)	N/A	2.7	0.8	N/A	11.2	0.2

Minor Storm (Calculated) Analysis of Flow T

C	N/A	N/A	N/A	N/A	N/A	N/A
C_5	N/A	N/A	N/A	N/A	N/A	N/A
Overland Flow Velocity, Vi	N/A	N/A	N/A	N/A	N/A	N/A
Channel Flow Velocity, Vt	N/A	N/A	N/A	N/A	N/A	N/A
Overland Flow Time, Ti	N/A	N/A	N/A	N/A	N/A	N/A
Channel Travel Time, Tt	N/A	N/A	N/A	N/A	N/A	N/A
Calculated Time of Concentration, T_c	N/A	N/A	N/A	N/A	N/A	N/A
Regional T_c	N/A	N/A	N/A	N/A	N/A	N/A
Recommended T_c	N/A	N/A	N/A	N/A	N/A	N/A
T_c selected by User	N/A	N/A	N/A	N/A	N/A	N/A
Design Rainfall Intensity, I	N/A	N/A	N/A	N/A	N/A	N/A
Calculated Local Peak Flow, Q_p	N/A	N/A	N/A	N/A	N/A	N/A

Major Storm (Calculated) Analysis of Flow T

C	N/A	N/A	N/A	N/A	N/A	N/A
C_5	N/A	N/A	N/A	N/A	N/A	N/A
Overland Flow Velocity, Vi	N/A	N/A	N/A	N/A	N/A	N/A
Channel Flow Velocity, Vt	N/A	N/A	N/A	N/A	N/A	N/A
Overland Flow Time, Ti	N/A	N/A	N/A	N/A	N/A	N/A
Channel Travel Time, Tt	N/A	N/A	N/A	N/A	N/A	N/A
Calculated Time of Concentration, T_c	N/A	N/A	N/A	N/A	N/A	N/A
Regional T_c	N/A	N/A	N/A	N/A	N/A	N/A
Recommended T_c	N/A	N/A	N/A	N/A	N/A	N/A
T_c selected by User	N/A	N/A	N/A	N/A	N/A	N/A
Design Rainfall Intensity, I	N/A	N/A	N/A	N/A	N/A	N/A
Calculated Local Peak Flow, Q_p	N/A	N/A	N/A	N/A	N/A	N/A

Version 4.05 Released March 2017

INLET MANAGEMENT

Worksheet Protected

INLET NAME	DP-9B INLET	DP-11 INLET	DP-12 INLET	DP-13 INLET	DP-14 INLET	DP-15 INLET
Site Type (Urban or Rural)	URBAN	URBAN	URBAN	URBAN	URBAN	URBAN
Inlet Application (Street or Area)	STREET	STREET	STREET	STREET	STREET	STREET
Hydraulic Condition	On Grade	On Grade	On Grade	On Grade	In Sump	In Sump
Inlet Type	CDOT Type R Curb Opening	CDOT Type R Curb Opening	CDOT Type R Curb Opening	CDOT Type R Curb Opening	CDOT Type R Curb Opening	CDOT Type R Curb Opening

USER-DEFINED INPUT

User-Defined Design Flows

Minor Q_{Known} (cfs)	2.4	7.3	5.7	5.1	3.7	2.1
Major Q_{Known} (cfs)	10.4	15.9	15.0	17.3	7.1	4.7

Bypass (Carry-Over) Flow from Upstream

Receive Bypass Flow from:	User-Defined	User-Defined	User-Defined	No Bypass Flow Received	No Bypass Flow Received	User-Defined
Minor Bypass Flow Received, Q_b (cfs)	0.0	0.0	0.0		0.0	0.0
Major Bypass Flow Received, Q_b (cfs)	11.2	0.2	6.9		0.0	13.8

Watershed Characteristics

Subcatchment Area (acres)						
Percent Impervious						
NRCS Soil Type						

Watershed Profile

Overland Slope (ft/ft)						
Overland Length (ft)						
Channel Slope (ft/ft)						
Channel Length (ft)						

Minor Storm Rainfall Input

Design Storm Return Period, T_r (years)						
One-Hour Precipitation, P_1 (inches)						

Major Storm Rainfall Input

Design Storm Return Period, T_r (years)						
One-Hour Precipitation, P_1 (inches)						

CALCULATED OUTPUT

Minor Total Design Peak Flow, Q (cfs)	**2.4**	**7.3**	**5.7**	**5.1**	**3.7**	**2.1**
Major Total Design Peak Flow, Q (cfs)	**21.6**	**16.1**	**21.9**	**17.3**	**7.1**	**18.5**
Minor Flow Bypassed Downstream, Q_b (cfs)	0.0	0.0	0.0	0.0	N/A	N/A
Major Flow Bypassed Downstream, Q_b (cfs)	6.9	3.6	7.2	4.3	N/A	N/A

Minor Storm (Calculated) Analysis of Flow T

C	N/A	N/A	N/A	N/A	N/A	N/A
C_5	N/A	N/A	N/A	N/A	N/A	N/A
Overland Flow Velocity, Vi	N/A	N/A	N/A	N/A	N/A	N/A
Channel Flow Velocity, Vt	N/A	N/A	N/A	N/A	N/A	N/A
Overland Flow Time, Ti	N/A	N/A	N/A	N/A	N/A	N/A
Channel Travel Time, Tt	N/A	N/A	N/A	N/A	N/A	N/A
Calculated Time of Concentration, T_c	N/A	N/A	N/A	N/A	N/A	N/A
Regional T_c	N/A	N/A	N/A	N/A	N/A	N/A
Recommended T_c	N/A	N/A	N/A	N/A	N/A	N/A
T_c selected by User	N/A	N/A	N/A	N/A	N/A	N/A
Design Rainfall Intensity, I	N/A	N/A	N/A	N/A	N/A	N/A
Calculated Local Peak Flow, Q_p	N/A	N/A	N/A	N/A	N/A	N/A

Major Storm (Calculated) Analysis of Flow T

C	N/A	N/A	N/A	N/A	N/A	N/A
C_5	N/A	N/A	N/A	N/A	N/A	N/A
Overland Flow Velocity, Vi	N/A	N/A	N/A	N/A	N/A	N/A
Channel Flow Velocity, Vt	N/A	N/A	N/A	N/A	N/A	N/A
Overland Flow Time, Ti	N/A	N/A	N/A	N/A	N/A	N/A
Channel Travel Time, Tt	N/A	N/A	N/A	N/A	N/A	N/A
Calculated Time of Concentration, T_c	N/A	N/A	N/A	N/A	N/A	N/A
Regional T_c	N/A	N/A	N/A	N/A	N/A	N/A
Recommended T_c	N/A	N/A	N/A	N/A	N/A	N/A
T_c selected by User	N/A	N/A	N/A	N/A	N/A	N/A
Design Rainfall Intensity, I	N/A	N/A	N/A	N/A	N/A	N/A
Calculated Local Peak Flow, Q_p	N/A	N/A	N/A	N/A	N/A	N/A

Version 4.05 Released March 2017

INLET MANAGEMENT

Worksheet Protected

INLET NAME	DP-16 INLET	DP-17 INLET	DP-6A INLET
Site Type (Urban or Rural)	URBAN	URBAN	URBAN
Inlet Application (Street or Area)	STREET	STREET	STREET
Hydraulic Condition	In Sump	In Sump	On Grade
Inlet Type	CDOT Type R Curb Opening	CDOT Type R Curb Opening	CDOT Type R Curb Opening

USER-DEFINED INPUT

User-Defined Design Flows

Minor Q_{Known} (cfs)	1.5	1.7	4.1
Major Q_{Known} (cfs)	2.8	3.4	8.3

Bypass (Carry-Over) Flow from Upstream

Receive Bypass Flow from:	No Bypass Flow Received	No Bypass Flow Received	No Bypass Flow Received
Minor Bypass Flow Received, Q_b (cfs)	0.0	0.0	0.0
Major Bypass Flow Received, Q_b (cfs)	0.0	0.0	0.0

Watershed Characteristics

Subcatchment Area (acres)			
Percent Impervious			
NRCS Soil Type			

Watershed Profile

Overland Slope (ft/ft)			
Overland Length (ft)			
Channel Slope (ft/ft)			
Channel Length (ft)			

Minor Storm Rainfall Input

Design Storm Return Period, T_r (years)			
One-Hour Precipitation, P_1 (inches)			

Major Storm Rainfall Input

Design Storm Return Period, T_r (years)			
One-Hour Precipitation, P_1 (inches)			

CALCULATED OUTPUT

Minor Total Design Peak Flow, Q (cfs)	**1.5**	**1.7**	**4.1**
Major Total Design Peak Flow, Q (cfs)	**2.8**	**3.4**	**8.3**
Minor Flow Bypassed Downstream, Q_b (cfs)	N/A	N/A	1.5
Major Flow Bypassed Downstream, Q_b (cfs)	N/A	N/A	4.7

Minor Storm (Calculated) Analysis of Flow T

C	N/A	N/A	N/A
C_5	N/A	N/A	N/A
Overland Flow Velocity, Vi	N/A	N/A	N/A
Channel Flow Velocity, Vt	N/A	N/A	N/A
Overland Flow Time, Ti	N/A	N/A	N/A
Channel Travel Time, Tt	N/A	N/A	N/A
Calculated Time of Concentration, T_c	N/A	N/A	N/A
Regional T_c	N/A	N/A	N/A
Recommended T_c	N/A	N/A	N/A
T_c selected by User	N/A	N/A	N/A
Design Rainfall Intensity, I	N/A	N/A	N/A
Calculated Local Peak Flow, Q_p	N/A	N/A	N/A

Major Storm (Calculated) Analysis of Flow T

C	N/A	N/A	N/A
C_5	N/A	N/A	N/A
Overland Flow Velocity, Vi	N/A	N/A	N/A
Channel Flow Velocity, Vt	N/A	N/A	N/A
Overland Flow Time, Ti	N/A	N/A	N/A
Channel Travel Time, Tt	N/A	N/A	N/A
Calculated Time of Concentration, T_c	N/A	N/A	N/A
Regional T_c	N/A	N/A	N/A
Recommended T_c	N/A	N/A	N/A
T_c selected by User	N/A	N/A	N/A
Design Rainfall Intensity, I	N/A	N/A	N/A
Calculated Local Peak Flow, Q_p	N/A	N/A	N/A

Version 4.05 Released March 2017

ALLOWABLE CAPACITY FOR ONE-HALF OF STREET (Minor & Major Storm)

(Based on Regulated Criteria for Maximum Allowable Flow Depth and Spread)

Project: Enter Your Project Name Here

Inlet ID: DP-1A INLET

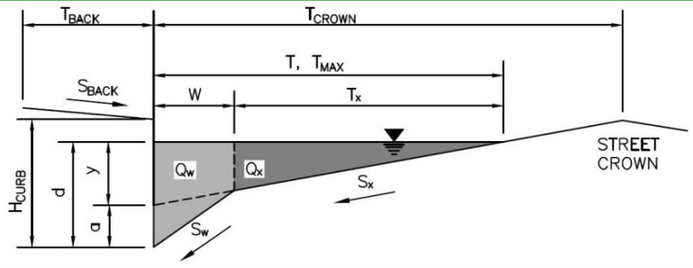

Gutter Geometry (Enter data in the blue cells)

Maximum Allowable Width for Spread Behind Curb	T_{BACK} =	7.5	ft
Side Slope Behind Curb (leave blank for no conveyance credit behind curb)	S_{BACK} =	0.020	ft/ft
Manning's Roughness Behind Curb (typically between 0.012 and 0.020)	n_{BACK} =	0.013	
Height of Curb at Gutter Flow Line	H_{CURB} =	6.00	inches
Distance from Curb Face to Street Crown	T_{CROWN} =	17.0	ft
Gutter Width	W =	2.00	ft
Street Transverse Slope	S_X =	0.020	ft/ft
Gutter Cross Slope (typically 2 inches over 24 inches or 0.083 ft/ft)	S_W =	0.083	ft/ft
Street Longitudinal Slope - Enter 0 for sump condition	S_O =	0.040	ft/ft
Manning's Roughness for Street Section (typically between 0.012 and 0.020)	n_{STREET} =	0.016	

		Minor Storm	Major Storm	
Max. Allowable Spread for Minor & Major Storm	T_{MAX} =	17.0	17.0	ft
Max. Allowable Depth at Gutter Flowline for Minor & Major Storm	d_{MAX} =	5.1	7.8	inches
Allow Flow Depth at Street Crown (leave blank for no)		☐	☑	check = yes

MINOR STORM Allowable Capacity is based on Depth Criterion

MAJOR STORM Allowable Capacity is based on Depth Criterion

	Minor Storm	Major Storm	
Q_{allow} =	**15.9**	**30.7**	**cfs**

Minor storm max. allowable capacity GOOD - greater than the design flow given on sheet 'Inlet Management'

Major storm max. allowable capacity GOOD - greater than the design flow given on sheet 'Inlet Management'

INLET ON A CONTINUOUS GRADE

Version 4.05 Released March 2017

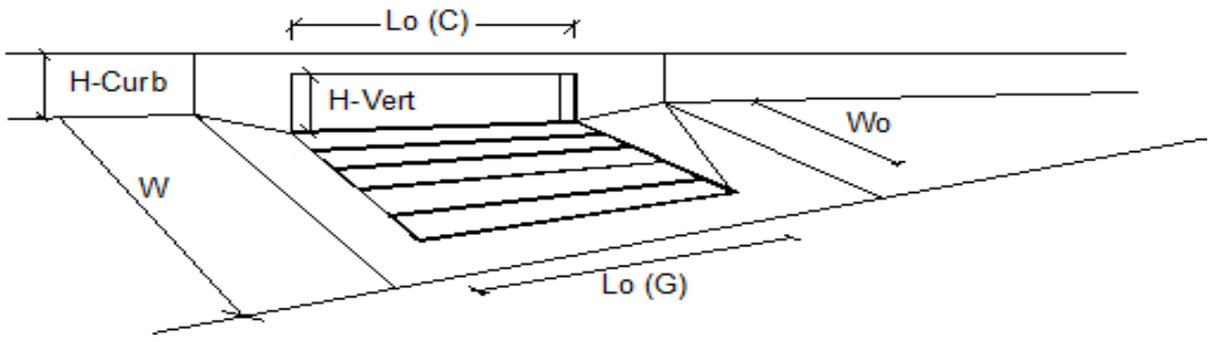

Design Information (Input)		MINOR	MAJOR	
Type of Inlet	Type =	CDOT Type R Curb Opening		
Local Depression (additional to continuous gutter depression 'a')	a_{LOCAL} =	3.0	3.0	inches
Total Number of Units in the Inlet (Grate or Curb Opening)	No =	1	1	
Length of a Single Unit Inlet (Grate or Curb Opening)	L_o =	15.00	15.00	ft
Width of a Unit Grate (cannot be greater than W, Gutter Width)	W_o =	N/A	N/A	ft
Clogging Factor for a Single Unit Grate (typical min. value = 0.5)	C_f-G =	N/A	N/A	
Clogging Factor for a Single Unit Curb Opening (typical min. value = 0.1)	C_f-C =	0.10	0.10	

Street Hydraulics: OK - Q < Allowable Street Capacity'		MINOR	MAJOR	
Total Inlet Interception Capacity	**Q =**	**9.2**	**15.3**	**cfs**
Total Inlet Carry-Over Flow (flow bypassing inlet)	**Q_b =**	**0.6**	**8.5**	**cfs**
Capture Percentage = Q_a/Q_o =	**C% =**	**93**	**64**	**%**

Version 4.05 Released March 2017

ALLOWABLE CAPACITY FOR ONE-HALF OF STREET (Minor & Major Storm)

(Based on Regulated Criteria for Maximum Allowable Flow Depth and Spread)

Project: Enter Your Project Name Here

Inlet ID: DP-1B INLET

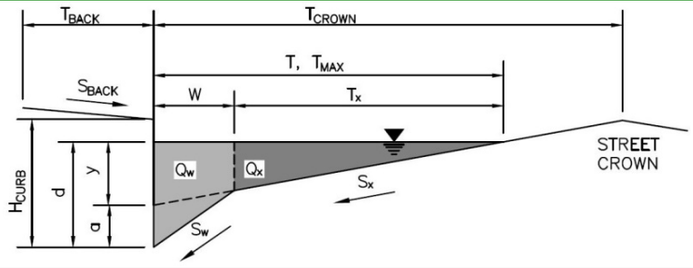

Gutter Geometry (Enter data in the blue cells)

Maximum Allowable Width for Spread Behind Curb	T_{BACK} =	7.5	ft
Side Slope Behind Curb (leave blank for no conveyance credit behind curb)	S_{BACK} =	0.020	ft/ft
Manning's Roughness Behind Curb (typically between 0.012 and 0.020)	n_{BACK} =	0.013	
Height of Curb at Gutter Flow Line	H_{CURB} =	6.00	inches
Distance from Curb Face to Street Crown	T_{CROWN} =	17.0	ft
Gutter Width	W =	2.00	ft
Street Transverse Slope	S_X =	0.020	ft/ft
Gutter Cross Slope (typically 2 inches over 24 inches or 0.083 ft/ft)	S_W =	0.083	ft/ft
Street Longitudinal Slope - Enter 0 for sump condition	S_O =	0.040	ft/ft
Manning's Roughness for Street Section (typically between 0.012 and 0.020)	n_{STREET} =	0.016	

		Minor Storm	Major Storm	
Max. Allowable Spread for Minor & Major Storm	T_{MAX} =	17.0	17.0	ft
Max. Allowable Depth at Gutter Flowline for Minor & Major Storm	d_{MAX} =	5.1	7.8	inches
Allow Flow Depth at Street Crown (leave blank for no)		☐	☑	check = yes

		Minor Storm	Major Storm	
MINOR STORM Allowable Capacity is based on Depth Criterion				
MAJOR STORM Allowable Capacity is based on Depth Criterion	**Q_{allow} =**	**15.9**	**30.7**	**cfs**

Minor storm max. allowable capacity GOOD - greater than the design flow given on sheet 'Inlet Management'

Major storm max. allowable capacity GOOD - greater than the design flow given on sheet 'Inlet Management'

INLET ON A CONTINUOUS GRADE

Version 4.05 Released March 2017

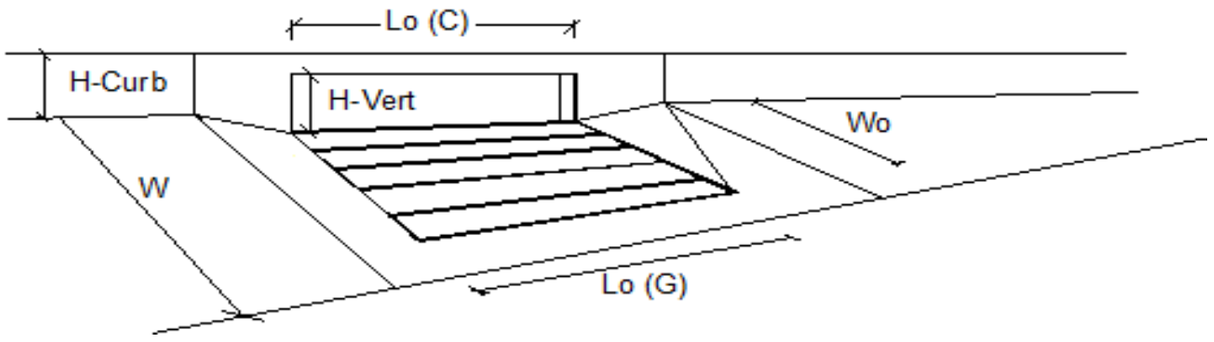

Design Information (Input)		MINOR	MAJOR	
Type of Inlet	Type =	CDOT Type R Curb Opening		
Local Depression (additional to continuous gutter depression 'a')	a_{LOCAL} =	3.0	3.0	inches
Total Number of Units in the Inlet (Grate or Curb Opening)	No =	1	1	
Length of a Single Unit Inlet (Grate or Curb Opening)	L_o =	15.00	15.00	ft
Width of a Unit Grate (cannot be greater than W, Gutter Width)	W_o =	N/A	N/A	ft
Clogging Factor for a Single Unit Grate (typical min. value = 0.5)	C_f-G =	N/A	N/A	
Clogging Factor for a Single Unit Curb Opening (typical min. value = 0.1)	C_f-C =	0.10	0.10	

Street Hydraulics: OK - Q < Allowable Street Capacity'		MINOR	MAJOR	
Total Inlet Interception Capacity	**Q =**	**4.6**	**15.0**	**cfs**
Total Inlet Carry-Over Flow (flow bypassing inlet)	**Q_b =**	**0.0**	**7.9**	**cfs**
Capture Percentage = Q_a/Q_o =	**C% =**	**100**	**65**	**%**

Version 4.05 Released March 2017

ALLOWABLE CAPACITY FOR ONE-HALF OF STREET (Minor & Major Storm)

(Based on Regulated Criteria for Maximum Allowable Flow Depth and Spread)

Project: Enter Your Project Name Here

Inlet ID: DP-2 INLET

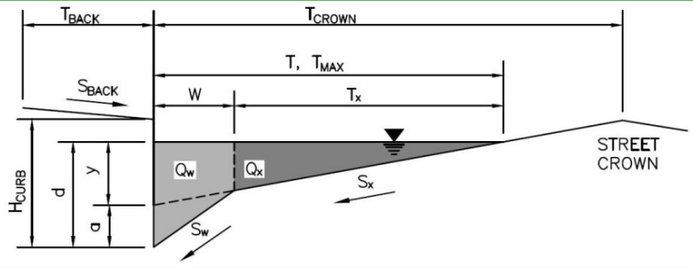

Gutter Geometry (Enter data in the blue cells)

Maximum Allowable Width for Spread Behind Curb	T_{BACK} =	7.5	ft
Side Slope Behind Curb (leave blank for no conveyance credit behind curb)	S_{BACK} =	0.020	ft/ft
Manning's Roughness Behind Curb (typically between 0.012 and 0.020)	n_{BACK} =	0.013	
Height of Curb at Gutter Flow Line	H_{CURB} =	6.00	inches
Distance from Curb Face to Street Crown	T_{CROWN} =	17.0	ft
Gutter Width	W =	2.00	ft
Street Transverse Slope	S_X =	0.020	ft/ft
Gutter Cross Slope (typically 2 inches over 24 inches or 0.083 ft/ft)	S_W =	0.083	ft/ft
Street Longitudinal Slope - Enter 0 for sump condition	S_O =	0.040	ft/ft
Manning's Roughness for Street Section (typically between 0.012 and 0.020)	n_{STREET} =	0.016	

		Minor Storm	Major Storm	
Max. Allowable Spread for Minor & Major Storm	T_{MAX} =	17.0	17.0	ft
Max. Allowable Depth at Gutter Flowline for Minor & Major Storm	d_{MAX} =	5.1	7.8	inches
Allow Flow Depth at Street Crown (leave blank for no)		☐	☑	check = yes

		Minor Storm	Major Storm	
MINOR STORM Allowable Capacity is based on Depth Criterion				
MAJOR STORM Allowable Capacity is based on Depth Criterion	**Q_{allow} =**	**15.9**	**30.7**	**cfs**

Minor storm max. allowable capacity GOOD - greater than the design flow given on sheet 'Inlet Management'

Major storm max. allowable capacity GOOD - greater than the design flow given on sheet 'Inlet Management'

INLET ON A CONTINUOUS GRADE

Version 4.05 Released March 2017

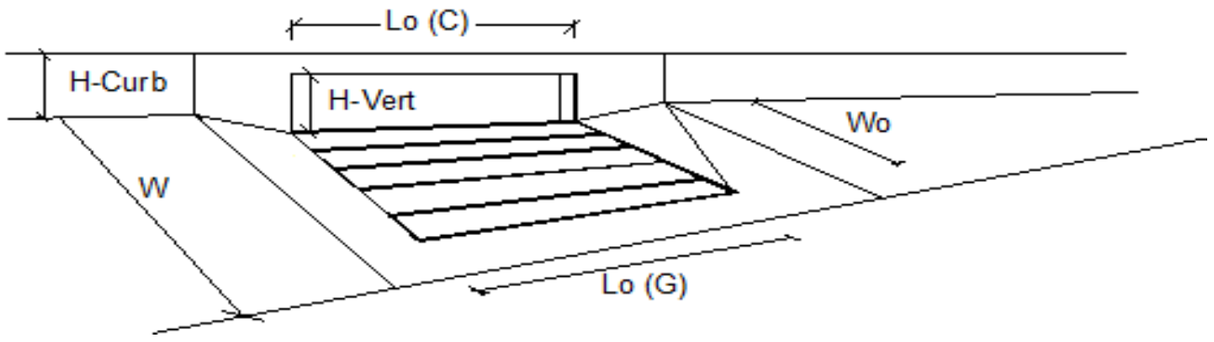

Design Information (Input)		MINOR	MAJOR	
Type of Inlet	Type =	CDOT Type R Curb Opening		
Local Depression (additional to continuous gutter depression 'a')	a_{LOCAL} =	3.0	3.0	inches
Total Number of Units in the Inlet (Grate or Curb Opening)	No =	1	1	
Length of a Single Unit Inlet (Grate or Curb Opening)	L_o =	15.00	15.00	ft
Width of a Unit Grate (cannot be greater than W, Gutter Width)	W_o =	N/A	N/A	ft
Clogging Factor for a Single Unit Grate (typical min. value = 0.5)	C_f-G =	N/A	N/A	
Clogging Factor for a Single Unit Curb Opening (typical min. value = 0.1)	C_f-C =	0.10	0.10	

Street Hydraulics: OK - Q < Allowable Street Capacity'		MINOR	MAJOR	
Total Inlet Interception Capacity	**Q =**	**3.7**	**13.4**	**cfs**
Total Inlet Carry-Over Flow (flow bypassing inlet)	**Q_b =**	**0.0**	**5.1**	**cfs**
Capture Percentage = Q_a/Q_o =	**C% =**	**100**	**73**	**%**

Version 4.05 Released March 2017

ALLOWABLE CAPACITY FOR ONE-HALF OF STREET (Minor & Major Storm)

(Based on Regulated Criteria for Maximum Allowable Flow Depth and Spread)

Project: Enter Your Project Name Here

Inlet ID: DP-3 INLET

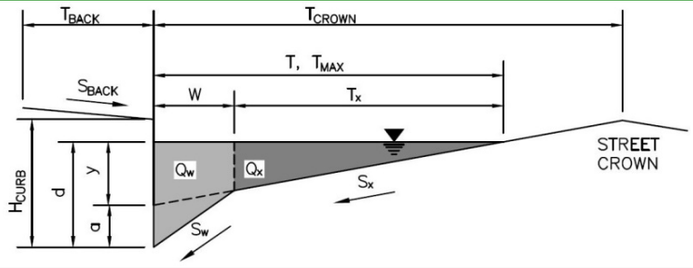

Gutter Geometry (Enter data in the blue cells)

Maximum Allowable Width for Spread Behind Curb	T_{BACK} =	7.5	ft
Side Slope Behind Curb (leave blank for no conveyance credit behind curb)	S_{BACK} =	0.020	ft/ft
Manning's Roughness Behind Curb (typically between 0.012 and 0.020)	n_{BACK} =	0.013	
Height of Curb at Gutter Flow Line	H_{CURB} =	6.00	inches
Distance from Curb Face to Street Crown	T_{CROWN} =	17.0	ft
Gutter Width	W =	2.00	ft
Street Transverse Slope	S_X =	0.020	ft/ft
Gutter Cross Slope (typically 2 inches over 24 inches or 0.083 ft/ft)	S_W =	0.083	ft/ft
Street Longitudinal Slope - Enter 0 for sump condition	S_O =	0.068	ft/ft
Manning's Roughness for Street Section (typically between 0.012 and 0.020)	n_{STREET} =	0.016	

		Minor Storm	Major Storm	
Max. Allowable Spread for Minor & Major Storm	T_{MAX} =	17.0	17.0	ft
Max. Allowable Depth at Gutter Flowline for Minor & Major Storm	d_{MAX} =	5.1	7.8	inches
Allow Flow Depth at Street Crown (leave blank for no)		☐	☑	check = yes

		Minor Storm	Major Storm	
MINOR STORM Allowable Capacity is based on Depth Criterion				
MAJOR STORM Allowable Capacity is based on Depth Criterion	**Q_{allow} =**	**13.9**	**26.2**	**cfs**

Minor storm max. allowable capacity GOOD - greater than the design flow given on sheet 'Inlet Management'

Major storm max. allowable capacity GOOD - greater than the design flow given on sheet 'Inlet Management'

INLET ON A CONTINUOUS GRADE

Version 4.05 Released March 2017

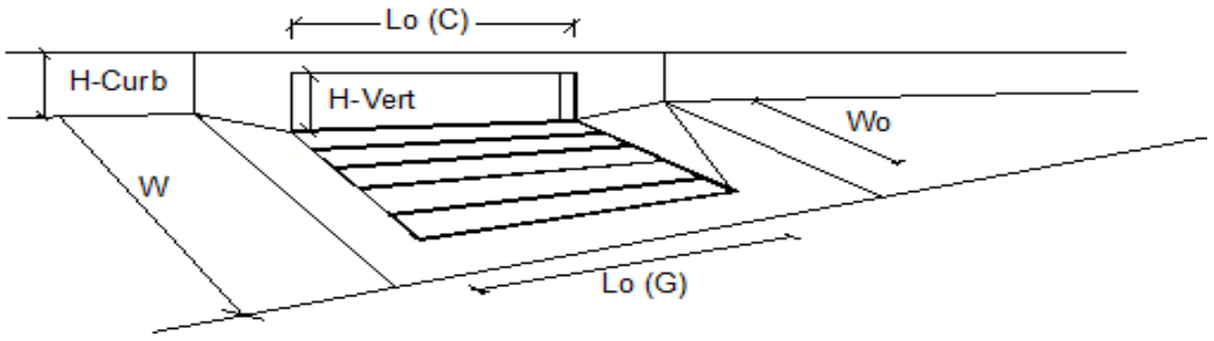

Design Information (Input)		MINOR	MAJOR	
Type of Inlet	Type =	CDOT Type R Curb Opening		
Local Depression (additional to continuous gutter depression 'a')	a_{LOCAL} =	3.0	3.0	inches
Total Number of Units in the Inlet (Grate or Curb Opening)	No =	1	1	
Length of a Single Unit Inlet (Grate or Curb Opening)	L_o =	15.00	15.00	ft
Width of a Unit Grate (cannot be greater than W, Gutter Width)	W_o =	N/A	N/A	ft
Clogging Factor for a Single Unit Grate (typical min. value = 0.5)	C_f-G =	N/A	N/A	
Clogging Factor for a Single Unit Curb Opening (typical min. value = 0.1)	C_f-C =	0.10	0.10	

Street Hydraulics: OK - Q < Allowable Street Capacity'		MINOR	MAJOR	
Total Inlet Interception Capacity	**Q =**	**5.9**	**15.5**	**cfs**
Total Inlet Carry-Over Flow (flow bypassing inlet)	**Q_b =**	**0.0**	**8.8**	**cfs**
Capture Percentage = Q_a/Q_o =	**C% =**	**100**	**64**	**%**

Version 4.05 Released March 2017

ALLOWABLE CAPACITY FOR ONE-HALF OF STREET (Minor & Major Storm)

(Based on Regulated Criteria for Maximum Allowable Flow Depth and Spread)

Project: Enter Your Project Name Here

Inlet ID: DP-4 INLET

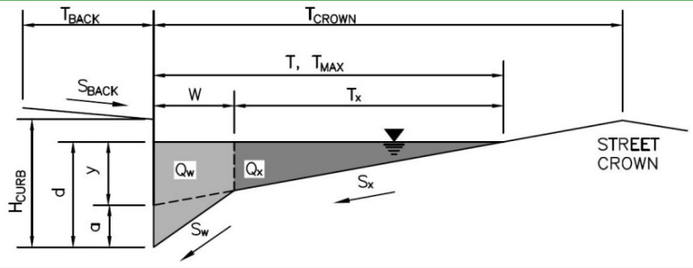

Gutter Geometry (Enter data in the blue cells)

Maximum Allowable Width for Spread Behind Curb	T_{BACK} =	7.5	ft
Side Slope Behind Curb (leave blank for no conveyance credit behind curb)	S_{BACK} =	0.020	ft/ft
Manning's Roughness Behind Curb (typically between 0.012 and 0.020)	n_{BACK} =	0.013	
Height of Curb at Gutter Flow Line	H_{CURB} =	6.00	inches
Distance from Curb Face to Street Crown	T_{CROWN} =	17.0	ft
Gutter Width	W =	2.00	ft
Street Transverse Slope	S_X =	0.020	ft/ft
Gutter Cross Slope (typically 2 inches over 24 inches or 0.083 ft/ft)	S_W =	0.083	ft/ft
Street Longitudinal Slope - Enter 0 for sump condition	S_O =	0.040	ft/ft
Manning's Roughness for Street Section (typically between 0.012 and 0.020)	n_{STREET} =	0.016	

		Minor Storm	Major Storm	
Max. Allowable Spread for Minor & Major Storm	T_{MAX} =	17.0	17.0	ft
Max. Allowable Depth at Gutter Flowline for Minor & Major Storm	d_{MAX} =	5.1	7.8	inches
Allow Flow Depth at Street Crown (leave blank for no)		☐	☑	check = yes

		Minor Storm	Major Storm	
MINOR STORM Allowable Capacity is based on Depth Criterion				
MAJOR STORM Allowable Capacity is based on Depth Criterion	**Q_{allow} =**	**15.9**	**30.7**	**cfs**

Minor storm max. allowable capacity GOOD - greater than the design flow given on sheet 'Inlet Management'

Major storm max. allowable capacity GOOD - greater than the design flow given on sheet 'Inlet Management'

INLET ON A CONTINUOUS GRADE

Version 4.05 Released March 2017

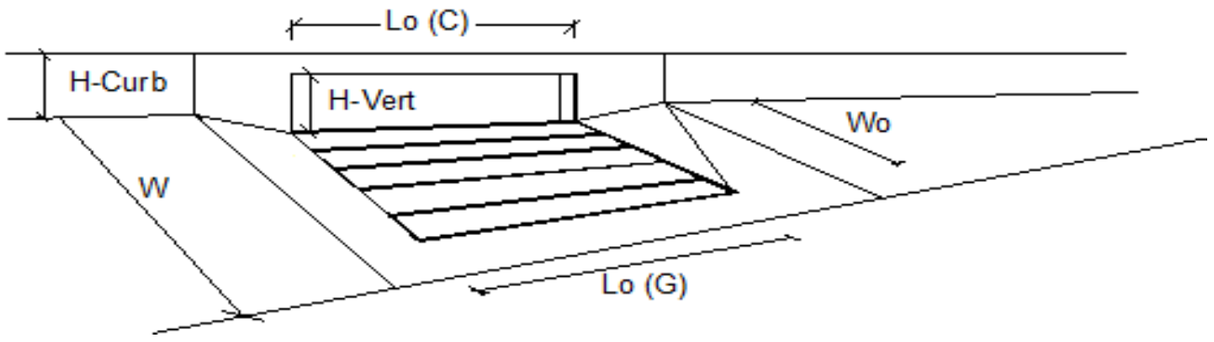

Design Information (Input)		MINOR	MAJOR	
Type of Inlet	Type =	CDOT Type R Curb Opening		
Local Depression (additional to continuous gutter depression 'a')	a_{LOCAL} =	3.0	3.0	inches
Total Number of Units in the Inlet (Grate or Curb Opening)	No =	1	1	
Length of a Single Unit Inlet (Grate or Curb Opening)	L_o =	15.00	15.00	ft
Width of a Unit Grate (cannot be greater than W, Gutter Width)	W_o =	N/A	N/A	ft
Clogging Factor for a Single Unit Grate (typical min. value = 0.5)	C_f-G =	N/A	N/A	
Clogging Factor for a Single Unit Curb Opening (typical min. value = 0.1)	C_f-C =	0.10	0.10	

Street Hydraulics: OK - Q < Allowable Street Capacity'		MINOR	MAJOR	
Total Inlet Interception Capacity	**Q =**	**3.7**	**13.9**	**cfs**
Total Inlet Carry-Over Flow (flow bypassing inlet)	**Q_b =**	**0.0**	**5.9**	**cfs**
Capture Percentage = Q_a/Q_o =	**C% =**	**100**	**70**	**%**

Version 4.05 Released March 2017

ALLOWABLE CAPACITY FOR ONE-HALF OF STREET (Minor & Major Storm)

(Based on Regulated Criteria for Maximum Allowable Flow Depth and Spread)

Project: Enter Your Project Name Here

Inlet ID: DP-5 INLET

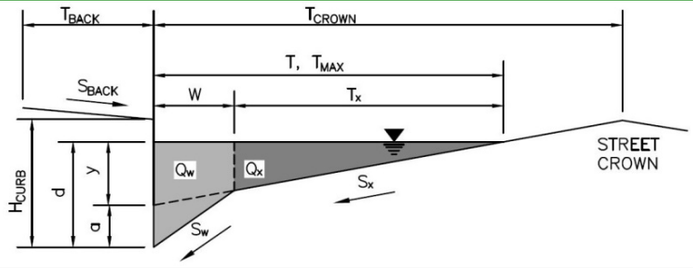

Gutter Geometry (Enter data in the blue cells)

Maximum Allowable Width for Spread Behind Curb	T_{BACK} =	7.5	ft
Side Slope Behind Curb (leave blank for no conveyance credit behind curb)	S_{BACK} =	0.020	ft/ft
Manning's Roughness Behind Curb (typically between 0.012 and 0.020)	n_{BACK} =	0.013	
Height of Curb at Gutter Flow Line	H_{CURB} =	6.00	inches
Distance from Curb Face to Street Crown	T_{CROWN} =	17.0	ft
Gutter Width	W =	2.00	ft
Street Transverse Slope	S_X =	0.020	ft/ft
Gutter Cross Slope (typically 2 inches over 24 inches or 0.083 ft/ft)	S_W =	0.083	ft/ft
Street Longitudinal Slope - Enter 0 for sump condition	S_O =	0.000	ft/ft
Manning's Roughness for Street Section (typically between 0.012 and 0.020)	n_{STREET} =	0.016	

		Minor Storm	Major Storm	
Max. Allowable Spread for Minor & Major Storm	T_{MAX} =	17.0	17.0	ft
Max. Allowable Depth at Gutter Flowline for Minor & Major Storm	d_{MAX} =	5.1	7.8	inches
Check boxes are not applicable in SUMP conditions		☐	☐	

		Minor Storm	Major Storm	
MINOR STORM Allowable Capacity is based on Depth Criterion				
MAJOR STORM Allowable Capacity is based on Depth Criterion	**Q_{allow} =**	**SUMP**	**SUMP**	**cfs**

INLET IN A SUMP OR SAG LOCATION

Version 4.05 Released March 2017

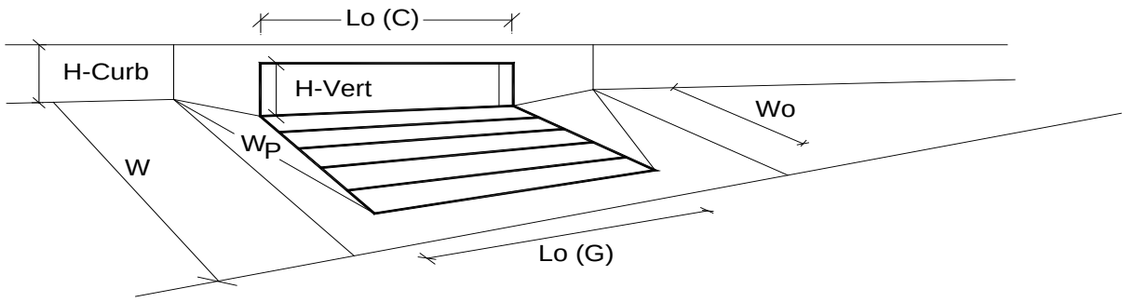

Design Information (Input)		MINOR	MAJOR	
Type of Inlet	Type =	CDOT Type R Curb Opening		
Local Depression (additional to continuous gutter depression 'a' from above)	a_{local} =	3.00	3.00	inches
Number of Unit Inlets (Grate or Curb Opening)	No =	1	1	
Water Depth at Flowline (outside of local depression)	Ponding Depth =	5.1	7.8	inches
Grate Information		MINOR	MAJOR	☑ Override Depths
Length of a Unit Grate	L_o (G) =	N/A	N/A	feet
Width of a Unit Grate	W_o =	N/A	N/A	feet
Area Opening Ratio for a Grate (typical values 0.15-0.90)	A_{ratio} =	N/A	N/A	
Clogging Factor for a Single Grate (typical value 0.50 - 0.70)	C_f (G) =	N/A	N/A	
Grate Weir Coefficient (typical value 2.15 - 3.60)	C_w (G) =	N/A	N/A	
Grate Orifice Coefficient (typical value 0.60 - 0.80)	C_o (G) =	N/A	N/A	
Curb Opening Information		MINOR	MAJOR	
Length of a Unit Curb Opening	L_o (C) =	15.00	15.00	feet
Height of Vertical Curb Opening in Inches	H_{vert} =	6.00	6.00	inches
Height of Curb Orifice Throat in Inches	H_{throat} =	6.00	6.00	inches
Angle of Throat (see USDCM Figure ST-5)	Theta =	63.40	63.40	degrees
Side Width for Depression Pan (typically the gutter width of 2 feet)	W_p =	2.00	2.00	feet
Clogging Factor for a Single Curb Opening (typical value 0.10)	C_f (C) =	0.10	0.10	
Curb Opening Weir Coefficient (typical value 2.3-3.7)	C_w (C) =	3.60	3.60	
Curb Opening Orifice Coefficient (typical value 0.60 - 0.70)	C_o (C) =	0.67	0.67	

Low Head Performance Reduction (Calculated)		MINOR	MAJOR	
Depth for Grate Midwidth	d_{Grate} =	N/A	N/A	ft
Depth for Curb Opening Weir Equation	d_{Curb} =	0.26	0.48	ft
Combination Inlet Performance Reduction Factor for Long Inlets	$RF_{Combination}$ =	0.48	0.74	
Curb Opening Performance Reduction Factor for Long Inlets	RF_{Curb} =	0.73	0.88	
Grated Inlet Performance Reduction Factor for Long Inlets	RF_{Grate} =	N/A	N/A	

		MINOR	MAJOR	
Total Inlet Interception Capacity (assumes clogged condition)	**Q_a =**	**6.1**	**19.1**	**cfs**
Inlet Capacity IS GOOD for Minor and Major Storms(>Q PEAK)	$Q_{PEAK\ REQUIRED}$ =	2.8	18.9	cfs

Version 4.05 Released March 2017

ALLOWABLE CAPACITY FOR ONE-HALF OF STREET (Minor & Major Storm)

(Based on Regulated Criteria for Maximum Allowable Flow Depth and Spread)

Project: Enter Your Project Name Here

Inlet ID: DP-6A INLET

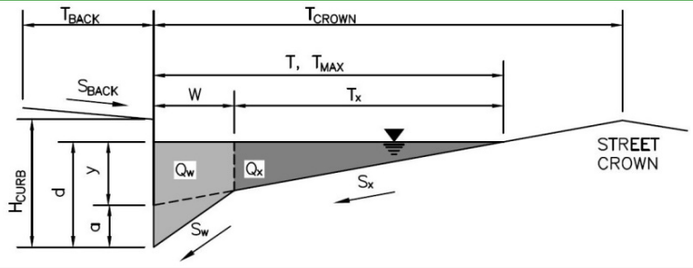

Gutter Geometry (Enter data in the blue cells)

Maximum Allowable Width for Spread Behind Curb	T_{BACK} =	7.5	ft
Side Slope Behind Curb (leave blank for no conveyance credit behind curb)	S_{BACK} =	0.020	ft/ft
Manning's Roughness Behind Curb (typically between 0.012 and 0.020)	n_{BACK} =	0.013	
Height of Curb at Gutter Flow Line	H_{CURB} =	6.00	inches
Distance from Curb Face to Street Crown	T_{CROWN} =	17.0	ft
Gutter Width	W =	2.00	ft
Street Transverse Slope	S_X =	0.020	ft/ft
Gutter Cross Slope (typically 2 inches over 24 inches or 0.083 ft/ft)	S_W =	0.083	ft/ft
Street Longitudinal Slope - Enter 0 for sump condition	S_O =	0.040	ft/ft
Manning's Roughness for Street Section (typically between 0.012 and 0.020)	n_{STREET} =	0.016	

		Minor Storm	Major Storm	
Max. Allowable Spread for Minor & Major Storm	T_{MAX} =	17.0	17.0	ft
Max. Allowable Depth at Gutter Flowline for Minor & Major Storm	d_{MAX} =	5.1	7.8	inches
Allow Flow Depth at Street Crown (leave blank for no)		☐	☐	check = yes

		Minor Storm	Major Storm	
MINOR STORM Allowable Capacity is based on Depth Criterion				
MAJOR STORM Allowable Capacity is based on Spread Criterion	**Q_{allow} =**	**15.9**	**21.7**	**cfs**

Minor storm max. allowable capacity GOOD - greater than the design flow given on sheet 'Inlet Management'

Major storm max. allowable capacity GOOD - greater than the design flow given on sheet 'Inlet Management'

INLET ON A CONTINUOUS GRADE

Version 4.05 Released March 2017

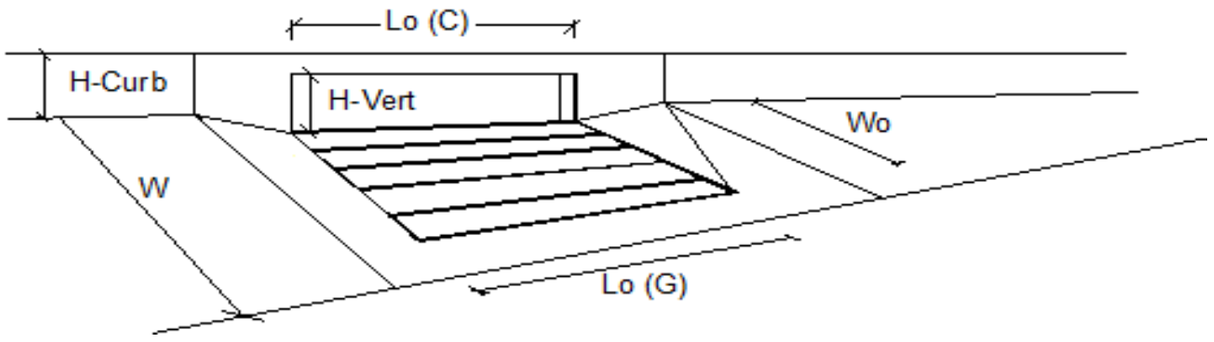

Design Information (Input)		MINOR	MAJOR	
Type of Inlet	Type =	CDOT Type R Curb Opening		
Local Depression (additional to continuous gutter depression 'a')	a_{LOCAL} =	3.0	3.0	inches
Total Number of Units in the Inlet (Grate or Curb Opening)	No =	1	1	
Length of a Single Unit Inlet (Grate or Curb Opening)	L_o =	5.00	5.00	ft
Width of a Unit Grate (cannot be greater than W, Gutter Width)	W_o =	N/A	N/A	ft
Clogging Factor for a Single Unit Grate (typical min. value = 0.5)	C_f-G =	N/A	N/A	
Clogging Factor for a Single Unit Curb Opening (typical min. value = 0.1)	C_f-C =	0.10	0.10	

Street Hydraulics: OK - Q < Allowable Street Capacity'		MINOR	MAJOR	
Total Inlet Interception Capacity	**Q =**	**2.6**	**3.6**	**cfs**
Total Inlet Carry-Over Flow (flow bypassing inlet)	**Q_b =**	**1.5**	**4.7**	**cfs**
Capture Percentage = Q_a/Q_o =	**C% =**	**64**	**43**	**%**

Version 4.05 Released March 2017

ALLOWABLE CAPACITY FOR ONE-HALF OF STREET (Minor & Major Storm)

(Based on Regulated Criteria for Maximum Allowable Flow Depth and Spread)

Project: Enter Your Project Name Here

Inlet ID: DP-6B INLET

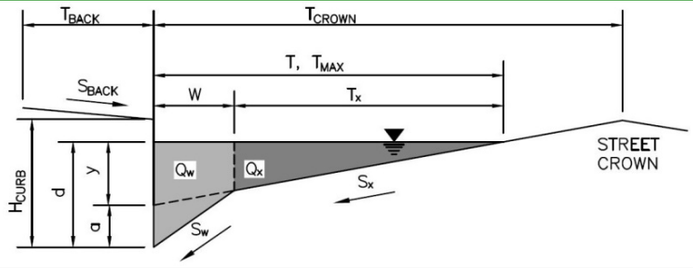

Gutter Geometry (Enter data in the blue cells)

Maximum Allowable Width for Spread Behind Curb	T_{BACK} =	7.5	ft
Side Slope Behind Curb (leave blank for no conveyance credit behind curb)	S_{BACK} =	0.020	ft/ft
Manning's Roughness Behind Curb (typically between 0.012 and 0.020)	n_{BACK} =	0.013	
Height of Curb at Gutter Flow Line	H_{CURB} =	6.00	inches
Distance from Curb Face to Street Crown	T_{CROWN} =	17.0	ft
Gutter Width	W =	2.00	ft
Street Transverse Slope	S_X =	0.020	ft/ft
Gutter Cross Slope (typically 2 inches over 24 inches or 0.083 ft/ft)	S_W =	0.083	ft/ft
Street Longitudinal Slope - Enter 0 for sump condition	S_O =	0.000	ft/ft
Manning's Roughness for Street Section (typically between 0.012 and 0.020)	n_{STREET} =	0.016	

		Minor Storm	Major Storm	
Max. Allowable Spread for Minor & Major Storm	T_{MAX} =	17.0	17.0	ft
Max. Allowable Depth at Gutter Flowline for Minor & Major Storm	d_{MAX} =	5.1	7.8	inches
Check boxes are not applicable in SUMP conditions		☐	☐	

		Minor Storm	Major Storm	
MINOR STORM Allowable Capacity is based on Depth Criterion				
MAJOR STORM Allowable Capacity is based on Depth Criterion	**Q_{allow} =**	**SUMP**	**SUMP**	**cfs**

INLET IN A SUMP OR SAG LOCATION

Version 4.05 Released March 2017

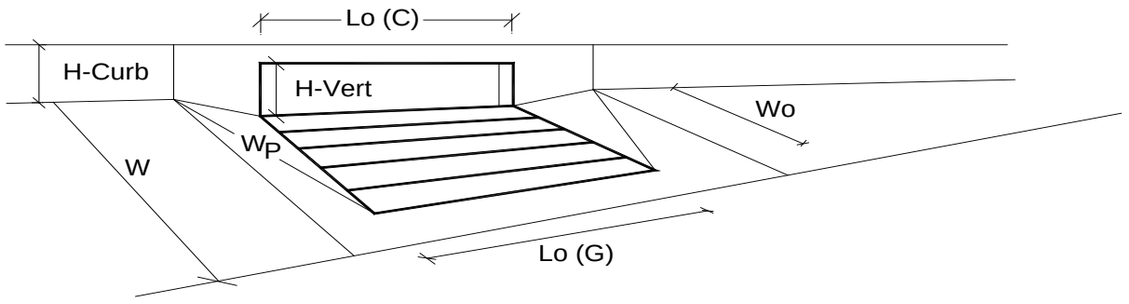

Design Information (Input)		MINOR	MAJOR	
Type of Inlet	Type =	CDOT Type R Curb Opening		
Local Depression (additional to continuous gutter depression 'a' from above)	a_{local} =	3.00	3.00	inches
Number of Unit Inlets (Grate or Curb Opening)	No =	1	1	
Water Depth at Flowline (outside of local depression)	Ponding Depth =	5.1	7.8	inches
Grate Information		MINOR	MAJOR	☑ Override Depths
Length of a Unit Grate	L_o (G) =	N/A	N/A	feet
Width of a Unit Grate	W_o =	N/A	N/A	feet
Area Opening Ratio for a Grate (typical values 0.15-0.90)	A_{ratio} =	N/A	N/A	
Clogging Factor for a Single Grate (typical value 0.50 - 0.70)	C_f (G) =	N/A	N/A	
Grate Weir Coefficient (typical value 2.15 - 3.60)	C_w (G) =	N/A	N/A	
Grate Orifice Coefficient (typical value 0.60 - 0.80)	C_o (G) =	N/A	N/A	
Curb Opening Information		MINOR	MAJOR	
Length of a Unit Curb Opening	L_o (C) =	10.00	10.00	feet
Height of Vertical Curb Opening in Inches	H_{vert} =	6.00	6.00	inches
Height of Curb Orifice Throat in Inches	H_{throat} =	6.00	6.00	inches
Angle of Throat (see USDCM Figure ST-5)	Theta =	63.40	63.40	degrees
Side Width for Depression Pan (typically the gutter width of 2 feet)	W_p =	2.00	2.00	feet
Clogging Factor for a Single Curb Opening (typical value 0.10)	C_f (C) =	0.10	0.10	
Curb Opening Weir Coefficient (typical value 2.3-3.7)	C_w (C) =	3.60	3.60	
Curb Opening Orifice Coefficient (typical value 0.60 - 0.70)	C_o (C) =	0.67	0.67	

Low Head Performance Reduction (Calculated)		MINOR	MAJOR	
Depth for Grate Midwidth	d_{Grate} =	N/A	N/A	ft
Depth for Curb Opening Weir Equation	d_{Curb} =	0.26	0.48	ft
Combination Inlet Performance Reduction Factor for Long Inlets	$RF_{Combination}$ =	0.48	0.74	
Curb Opening Performance Reduction Factor for Long Inlets	RF_{Curb} =	0.88	1.00	
Grated Inlet Performance Reduction Factor for Long Inlets	RF_{Grate} =	N/A	N/A	

		MINOR	MAJOR	
Total Inlet Interception Capacity (assumes clogged condition)	**Q_a =**	**5.3**	**15.5**	**cfs**
Inlet Capacity IS GOOD for Minor and Major Storms(>Q PEAK)	$Q_{PEAK\ REQUIRED}$ =	3.8	9.4	cfs

Version 4.05 Released March 2017

ALLOWABLE CAPACITY FOR ONE-HALF OF STREET (Minor & Major Storm)

(Based on Regulated Criteria for Maximum Allowable Flow Depth and Spread)

Project: Enter Your Project Name Here

Inlet ID: DP-7A INLET

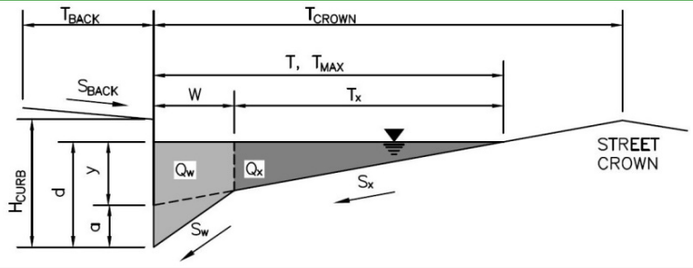

Gutter Geometry (Enter data in the blue cells)

Maximum Allowable Width for Spread Behind Curb	T_{BACK} =	7.5	ft
Side Slope Behind Curb (leave blank for no conveyance credit behind curb)	S_{BACK} =	0.020	ft/ft
Manning's Roughness Behind Curb (typically between 0.012 and 0.020)	n_{BACK} =	0.013	
Height of Curb at Gutter Flow Line	H_{CURB} =	6.00	inches
Distance from Curb Face to Street Crown	T_{CROWN} =	17.0	ft
Gutter Width	W =	2.00	ft
Street Transverse Slope	S_X =	0.020	ft/ft
Gutter Cross Slope (typically 2 inches over 24 inches or 0.083 ft/ft)	S_W =	0.083	ft/ft
Street Longitudinal Slope - Enter 0 for sump condition	S_O =	0.015	ft/ft
Manning's Roughness for Street Section (typically between 0.012 and 0.020)	n_{STREET} =	0.016	

		Minor Storm	Major Storm	
Max. Allowable Spread for Minor & Major Storm	T_{MAX} =	17.0	17.0	ft
Max. Allowable Depth at Gutter Flowline for Minor & Major Storm	d_{MAX} =	5.1	7.8	inches
Allow Flow Depth at Street Crown (leave blank for no)		☐	☑	check = yes

		Minor Storm	Major Storm	
MINOR STORM Allowable Capacity is based on Depth Criterion				
MAJOR STORM Allowable Capacity is based on Depth Criterion	**Q_{allow} =**	**9.7**	**39.2**	**cfs**

Minor storm max. allowable capacity GOOD - greater than the design flow given on sheet 'Inlet Management'

Major storm max. allowable capacity GOOD - greater than the design flow given on sheet 'Inlet Management'

INLET ON A CONTINUOUS GRADE

Version 4.05 Released March 2017

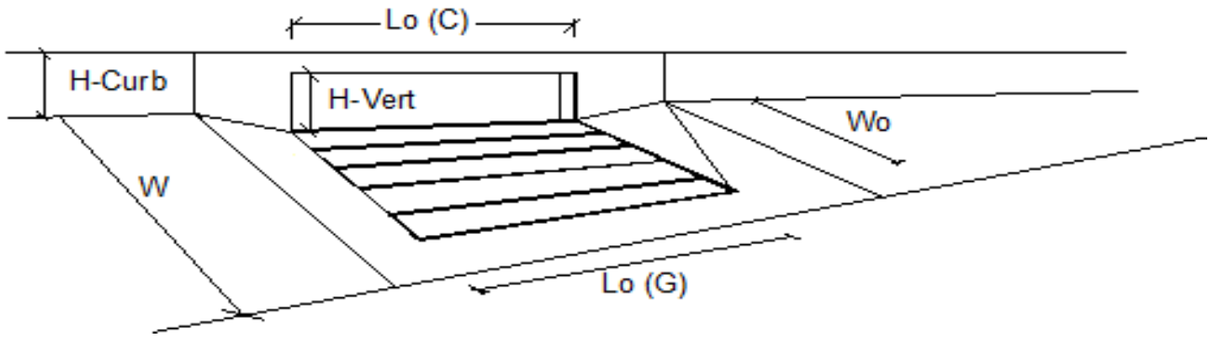

Design Information (Input)		MINOR	MAJOR	
Type of Inlet	Type =	CDOT Type R Curb Opening		
Local Depression (additional to continuous gutter depression 'a')	a_{LOCAL} =	3.0	3.0	inches
Total Number of Units in the Inlet (Grate or Curb Opening)	No =	1	1	
Length of a Single Unit Inlet (Grate or Curb Opening)	L_o =	10.00	10.00	ft
Width of a Unit Grate (cannot be greater than W, Gutter Width)	W_o =	N/A	N/A	ft
Clogging Factor for a Single Unit Grate (typical min. value = 0.5)	C_f-G =	N/A	N/A	
Clogging Factor for a Single Unit Curb Opening (typical min. value = 0.1)	C_f-C =	0.10	0.10	

Street Hydraulics: OK - Q < Allowable Street Capacity'		MINOR	MAJOR	
Total Inlet Interception Capacity	**Q =**	**4.5**	**6.9**	**cfs**
Total Inlet Carry-Over Flow (flow bypassing inlet)	**Q_b =**	**0.2**	**2.7**	**cfs**
Capture Percentage = Q_a/Q_o =	**C% =**	**95**	**72**	**%**

Version 4.05 Released March 2017

ALLOWABLE CAPACITY FOR ONE-HALF OF STREET (Minor & Major Storm)

(Based on Regulated Criteria for Maximum Allowable Flow Depth and Spread)

Project: Enter Your Project Name Here

Inlet ID: DP-7B INLET

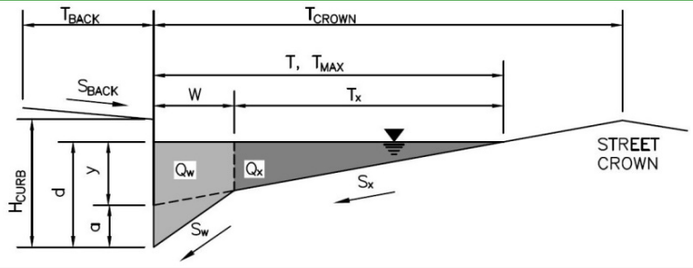

Gutter Geometry (Enter data in the blue cells)

Maximum Allowable Width for Spread Behind Curb	T_{BACK} =	7.5	ft
Side Slope Behind Curb (leave blank for no conveyance credit behind curb)	S_{BACK} =	0.020	ft/ft
Manning's Roughness Behind Curb (typically between 0.012 and 0.020)	n_{BACK} =	0.013	
Height of Curb at Gutter Flow Line	H_{CURB} =	6.00	inches
Distance from Curb Face to Street Crown	T_{CROWN} =	17.0	ft
Gutter Width	W =	2.00	ft
Street Transverse Slope	S_X =	0.020	ft/ft
Gutter Cross Slope (typically 2 inches over 24 inches or 0.083 ft/ft)	S_W =	0.083	ft/ft
Street Longitudinal Slope - Enter 0 for sump condition	S_O =	0.015	ft/ft
Manning's Roughness for Street Section (typically between 0.012 and 0.020)	n_{STREET} =	0.016	

		Minor Storm	Major Storm	
Max. Allowable Spread for Minor & Major Storm	T_{MAX} =	17.0	17.0	ft
Max. Allowable Depth at Gutter Flowline for Minor & Major Storm	d_{MAX} =	5.1	7.8	inches
Allow Flow Depth at Street Crown (leave blank for no)		☐	☑	check = yes

		Minor Storm	Major Storm	
MINOR STORM Allowable Capacity is based on Depth Criterion				
MAJOR STORM Allowable Capacity is based on Depth Criterion	**Q_{allow} =**	**9.7**	**39.2**	**cfs**

Minor storm max. allowable capacity GOOD - greater than the design flow given on sheet 'Inlet Management'

Major storm max. allowable capacity GOOD - greater than the design flow given on sheet 'Inlet Management'

INLET ON A CONTINUOUS GRADE

Version 4.05 Released March 2017

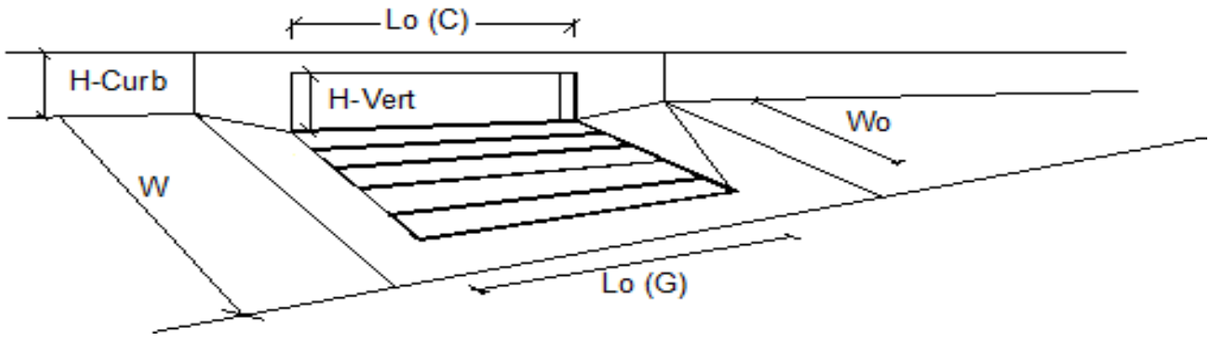

Design Information (Input)		MINOR	MAJOR	
Type of Inlet	Type =	CDOT Type R Curb Opening		
Local Depression (additional to continuous gutter depression 'a')	a_{LOCAL} =	3.0	3.0	inches
Total Number of Units in the Inlet (Grate or Curb Opening)	No =	1	1	
Length of a Single Unit Inlet (Grate or Curb Opening)	L_o =	10.00	10.00	ft
Width of a Unit Grate (cannot be greater than W, Gutter Width)	W_o =	N/A	N/A	ft
Clogging Factor for a Single Unit Grate (typical min. value = 0.5)	C_f-G =	N/A	N/A	
Clogging Factor for a Single Unit Curb Opening (typical min. value = 0.1)	C_f-C =	0.10	0.10	

Street Hydraulics: OK - Q < Allowable Street Capacity'		MINOR	MAJOR	
Total Inlet Interception Capacity	**Q =**	**3.0**	**5.4**	**cfs**
Total Inlet Carry-Over Flow (flow bypassing inlet)	**Q_b =**	**0.0**	**0.8**	**cfs**
Capture Percentage = Q_a/Q_o =	**C% =**	**100**	**87**	**%**

Version 4.05 Released March 2017

ALLOWABLE CAPACITY FOR ONE-HALF OF STREET (Minor & Major Storm)

(Based on Regulated Criteria for Maximum Allowable Flow Depth and Spread)

Project: Enter Your Project Name Here

Inlet ID: DP-8 INLET

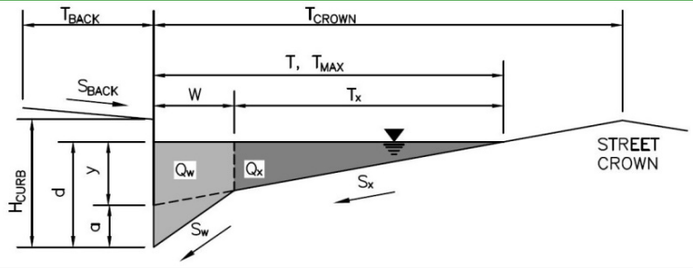

Gutter Geometry (Enter data in the blue cells)

Maximum Allowable Width for Spread Behind Curb	T_{BACK} =	7.5	ft
Side Slope Behind Curb (leave blank for no conveyance credit behind curb)	S_{BACK} =	0.020	ft/ft
Manning's Roughness Behind Curb (typically between 0.012 and 0.020)	n_{BACK} =	0.013	
Height of Curb at Gutter Flow Line	H_{CURB} =	6.00	inches
Distance from Curb Face to Street Crown	T_{CROWN} =	17.0	ft
Gutter Width	W =	2.00	ft
Street Transverse Slope	S_X =	0.020	ft/ft
Gutter Cross Slope (typically 2 inches over 24 inches or 0.083 ft/ft)	S_W =	0.083	ft/ft
Street Longitudinal Slope - Enter 0 for sump condition	S_O =	0.000	ft/ft
Manning's Roughness for Street Section (typically between 0.012 and 0.020)	n_{STREET} =	0.016	

		Minor Storm	Major Storm	
Max. Allowable Spread for Minor & Major Storm	T_{MAX} =	17.0	17.0	ft
Max. Allowable Depth at Gutter Flowline for Minor & Major Storm	d_{MAX} =	5.1	7.8	inches
Check boxes are not applicable in SUMP conditions		☐	☐	

		Minor Storm	Major Storm	
MINOR STORM Allowable Capacity is based on Depth Criterion				
MAJOR STORM Allowable Capacity is based on Depth Criterion	**Q_{allow} =**	**SUMP**	**SUMP**	**cfs**

INLET IN A SUMP OR SAG LOCATION

Version 4.05 Released March 2017

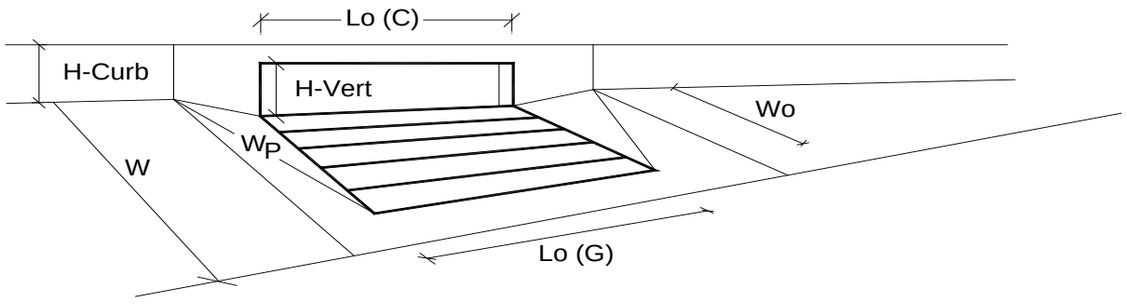

Design Information (Input)		MINOR	MAJOR	
Type of Inlet	Type =	CDOT Type R Curb Opening		
Local Depression (additional to continuous gutter depression 'a' from above)	a_{local} =	3.00	3.00	inches
Number of Unit Inlets (Grate or Curb Opening)	No =	1	1	
Water Depth at Flowline (outside of local depression)	Ponding Depth =	5.1	7.8	inches
Grate Information		MINOR	MAJOR	☑ Override Depths
Length of a Unit Grate	L_o (G) =	N/A	N/A	feet
Width of a Unit Grate	W_o =	N/A	N/A	feet
Area Opening Ratio for a Grate (typical values 0.15-0.90)	A_{ratio} =	N/A	N/A	
Clogging Factor for a Single Grate (typical value 0.50 - 0.70)	C_f (G) =	N/A	N/A	
Grate Weir Coefficient (typical value 2.15 - 3.60)	C_w (G) =	N/A	N/A	
Grate Orifice Coefficient (typical value 0.60 - 0.80)	C_o (G) =	N/A	N/A	
Curb Opening Information		MINOR	MAJOR	
Length of a Unit Curb Opening	L_o (C) =	15.00	15.00	feet
Height of Vertical Curb Opening in Inches	H_{vert} =	6.00	6.00	inches
Height of Curb Orifice Throat in Inches	H_{throat} =	6.00	6.00	inches
Angle of Throat (see USDCM Figure ST-5)	Theta =	63.40	63.40	degrees
Side Width for Depression Pan (typically the gutter width of 2 feet)	W_p =	2.00	2.00	feet
Clogging Factor for a Single Curb Opening (typical value 0.10)	C_f (C) =	0.10	0.10	
Curb Opening Weir Coefficient (typical value 2.3-3.7)	C_w (C) =	3.60	3.60	
Curb Opening Orifice Coefficient (typical value 0.60 - 0.70)	C_o (C) =	0.67	0.67	

Low Head Performance Reduction (Calculated)		MINOR	MAJOR	
Depth for Grate Midwidth	d_{Grate} =	N/A	N/A	ft
Depth for Curb Opening Weir Equation	d_{Curb} =	0.26	0.48	ft
Combination Inlet Performance Reduction Factor for Long Inlets	$RF_{Combination}$ =	0.48	0.74	
Curb Opening Performance Reduction Factor for Long Inlets	RF_{Curb} =	0.73	0.88	
Grated Inlet Performance Reduction Factor for Long Inlets	RF_{Grate} =	N/A	N/A	

		MINOR	MAJOR	
Total Inlet Interception Capacity (assumes clogged condition)	**Q_a =**	**6.1**	**19.1**	**cfs**
Inlet Capacity IS GOOD for Minor and Major Storms(>Q PEAK)	$Q_{PEAK\ REQUIRED}$ =	5.4	14.2	cfs

Version 4.05 Released March 2017

ALLOWABLE CAPACITY FOR ONE-HALF OF STREET (Minor & Major Storm)

(Based on Regulated Criteria for Maximum Allowable Flow Depth and Spread)

Project: Enter Your Project Name Here

Inlet ID: DP-9A INLET

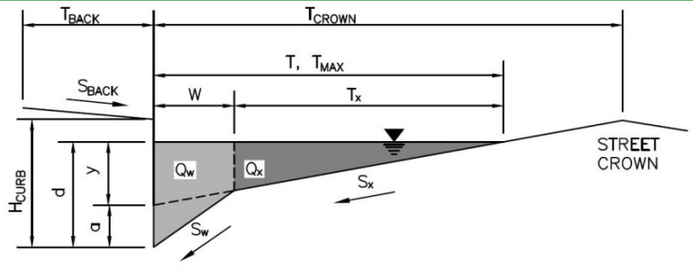

Gutter Geometry (Enter data in the blue cells)

Maximum Allowable Width for Spread Behind Curb	T_{BACK} =	7.5	ft
Side Slope Behind Curb (leave blank for no conveyance credit behind curb)	S_{BACK} =	0.020	ft/ft
Manning's Roughness Behind Curb (typically between 0.012 and 0.020)	n_{BACK} =	0.013	
Height of Curb at Gutter Flow Line	H_{CURB} =	6.00	inches
Distance from Curb Face to Street Crown	T_{CROWN} =	17.0	ft
Gutter Width	W =	2.00	ft
Street Transverse Slope	S_X =	0.020	ft/ft
Gutter Cross Slope (typically 2 inches over 24 inches or 0.083 ft/ft)	S_W =	0.083	ft/ft
Street Longitudinal Slope - Enter 0 for sump condition	S_O =	0.040	ft/ft
Manning's Roughness for Street Section (typically between 0.012 and 0.020)	n_{STREET} =	0.016	

		Minor Storm	Major Storm	
Max. Allowable Spread for Minor & Major Storm	T_{MAX} =	17.0	17.0	ft
Max. Allowable Depth at Gutter Flowline for Minor & Major Storm	d_{MAX} =	5.1	7.8	inches
Allow Flow Depth at Street Crown (leave blank for no)		☐	☑	check = yes

MINOR STORM Allowable Capacity is based on Depth Criterion

MAJOR STORM Allowable Capacity is based on Depth Criterion

	Minor Storm	Major Storm	
Q_{allow} =	**15.9**	**30.7**	**cfs**

Minor storm max. allowable capacity GOOD - greater than the design flow given on sheet 'Inlet Management'

Major storm max. allowable capacity GOOD - greater than the design flow given on sheet 'Inlet Management'

INLET ON A CONTINUOUS GRADE

Version 4.05 Released March 2017

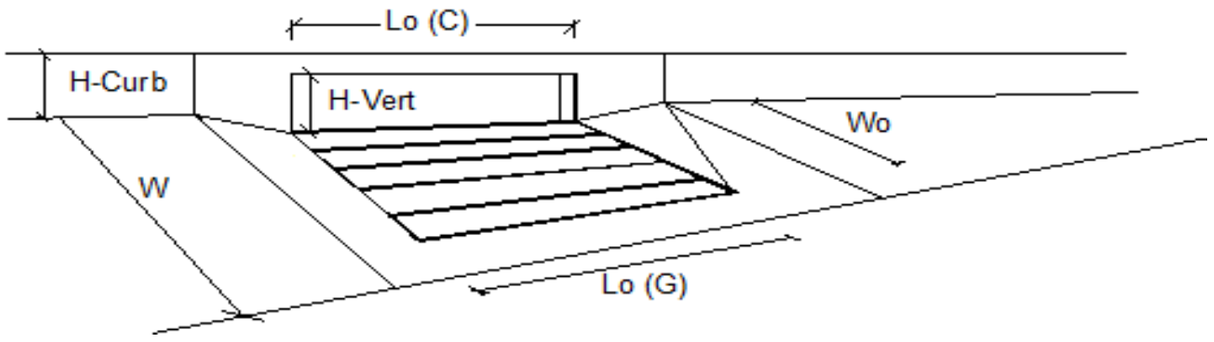

Design Information (Input)		MINOR	MAJOR	
Type of Inlet	Type =	CDOT Type R Curb Opening		
Local Depression (additional to continuous gutter depression 'a')	a_{LOCAL} =	3.0	3.0	inches
Total Number of Units in the Inlet (Grate or Curb Opening)	No =	1	1	
Length of a Single Unit Inlet (Grate or Curb Opening)	L_o =	15.00	15.00	ft
Width of a Unit Grate (cannot be greater than W, Gutter Width)	W_o =	N/A	N/A	ft
Clogging Factor for a Single Unit Grate (typical min. value = 0.5)	C_f-G =	N/A	N/A	
Clogging Factor for a Single Unit Curb Opening (typical min. value = 0.1)	C_f-C =	0.10	0.10	

Street Hydraulics: OK - Q < Allowable Street Capacity'		MINOR	MAJOR	
Total Inlet Interception Capacity	**Q =**	**6.4**	**16.4**	**cfs**
Total Inlet Carry-Over Flow (flow bypassing inlet)	**Q_b =**	**0.0**	**11.2**	**cfs**
Capture Percentage = Q_a/Q_o =	**C% =**	**100**	**60**	**%**

Version 4.05 Released March 2017

ALLOWABLE CAPACITY FOR ONE-HALF OF STREET (Minor & Major Storm)

(Based on Regulated Criteria for Maximum Allowable Flow Depth and Spread)

Project: Enter Your Project Name Here

Inlet ID: DP-9B INLET

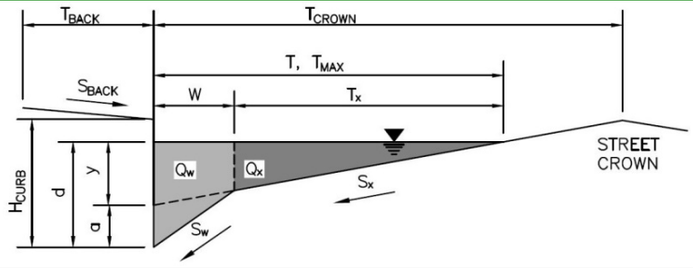

Gutter Geometry (Enter data in the blue cells)

Maximum Allowable Width for Spread Behind Curb	T_{BACK} =	7.5	ft
Side Slope Behind Curb (leave blank for no conveyance credit behind curb)	S_{BACK} =	0.020	ft/ft
Manning's Roughness Behind Curb (typically between 0.012 and 0.020)	n_{BACK} =	0.013	
Height of Curb at Gutter Flow Line	H_{CURB} =	6.00	inches
Distance from Curb Face to Street Crown	T_{CROWN} =	17.0	ft
Gutter Width	W =	2.00	ft
Street Transverse Slope	S_X =	0.020	ft/ft
Gutter Cross Slope (typically 2 inches over 24 inches or 0.083 ft/ft)	S_W =	0.083	ft/ft
Street Longitudinal Slope - Enter 0 for sump condition	S_O =	0.100	ft/ft
Manning's Roughness for Street Section (typically between 0.012 and 0.020)	n_{STREET} =	0.016	

		Minor Storm	Major Storm	
Max. Allowable Spread for Minor & Major Storm	T_{MAX} =	17.0	17.0	ft
Max. Allowable Depth at Gutter Flowline for Minor & Major Storm	d_{MAX} =	5.1	7.8	inches
Allow Flow Depth at Street Crown (leave blank for no)		☐	☑	check = yes

		Minor Storm	Major Storm	
MINOR STORM Allowable Capacity is based on Depth Criterion				
MAJOR STORM Allowable Capacity is based on Depth Criterion	**Q_{allow} =**	**12.4**	**23.3**	**cfs**

Minor storm max. allowable capacity GOOD - greater than the design flow given on sheet 'Inlet Management'

Major storm max. allowable capacity GOOD - greater than the design flow given on sheet 'Inlet Management'

INLET ON A CONTINUOUS GRADE

Version 4.05 Released March 2017

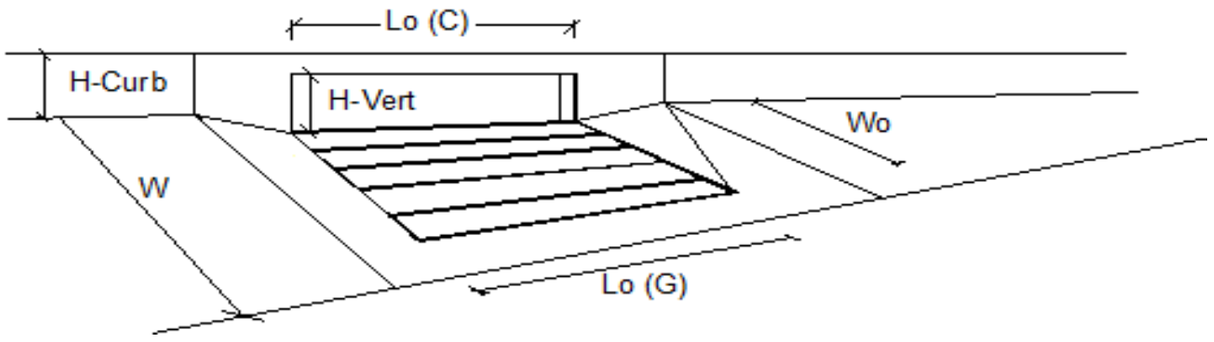

Design Information (Input)		MINOR	MAJOR	
Type of Inlet	Type =	CDOT Type R Curb Opening		
Local Depression (additional to continuous gutter depression 'a')	a_{LOCAL} =	3.0	3.0	inches
Total Number of Units in the Inlet (Grate or Curb Opening)	No =	1	1	
Length of a Single Unit Inlet (Grate or Curb Opening)	L_o =	15.00	15.00	ft
Width of a Unit Grate (cannot be greater than W, Gutter Width)	W_o =	N/A	N/A	ft
Clogging Factor for a Single Unit Grate (typical min. value = 0.5)	C_f-G =	N/A	N/A	
Clogging Factor for a Single Unit Curb Opening (typical min. value = 0.1)	C_f-C =	0.10	0.10	

Street Hydraulics: OK - Q < Allowable Street Capacity'		MINOR	MAJOR	
Total Inlet Interception Capacity	**Q =**	**2.4**	**14.7**	**cfs**
Total Inlet Carry-Over Flow (flow bypassing inlet)	**Q_b =**	**0.0**	**6.9**	**cfs**
Capture Percentage = Q_a/Q_o =	**C% =**	**100**	**68**	**%**

Version 4.05 Released March 2017

ALLOWABLE CAPACITY FOR ONE-HALF OF STREET (Minor & Major Storm)

(Based on Regulated Criteria for Maximum Allowable Flow Depth and Spread)

Project: Enter Your Project Name Here

Inlet ID: DP-10 INLET

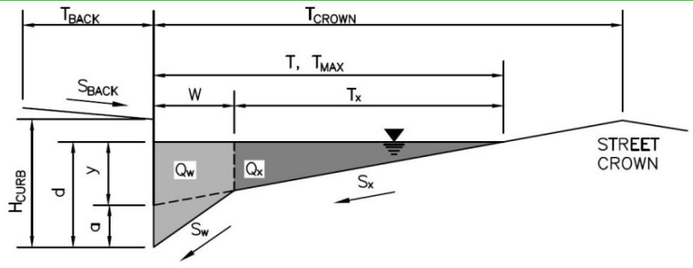

Gutter Geometry (Enter data in the blue cells)

Maximum Allowable Width for Spread Behind Curb	T_{BACK} =	7.5	ft
Side Slope Behind Curb (leave blank for no conveyance credit behind curb)	S_{BACK} =	0.020	ft/ft
Manning's Roughness Behind Curb (typically between 0.012 and 0.020)	n_{BACK} =	0.013	
Height of Curb at Gutter Flow Line	H_{CURB} =	6.00	inches
Distance from Curb Face to Street Crown	T_{CROWN} =	17.0	ft
Gutter Width	W =	2.00	ft
Street Transverse Slope	S_X =	0.020	ft/ft
Gutter Cross Slope (typically 2 inches over 24 inches or 0.083 ft/ft)	S_W =	0.083	ft/ft
Street Longitudinal Slope - Enter 0 for sump condition	S_O =	0.040	ft/ft
Manning's Roughness for Street Section (typically between 0.012 and 0.020)	n_{STREET} =	0.016	

		Minor Storm	Major Storm	
Max. Allowable Spread for Minor & Major Storm	T_{MAX} =	17.0	17.0	ft
Max. Allowable Depth at Gutter Flowline for Minor & Major Storm	d_{MAX} =	5.1	7.8	inches
Allow Flow Depth at Street Crown (leave blank for no)		☐	☑	check = yes

MINOR STORM Allowable Capacity is based on Depth Criterion

MAJOR STORM Allowable Capacity is based on Depth Criterion

	Minor Storm	Major Storm	
Q_{allow} =	**15.9**	**30.7**	**cfs**

Minor storm max. allowable capacity GOOD - greater than the design flow given on sheet 'Inlet Management'

Major storm max. allowable capacity GOOD - greater than the design flow given on sheet 'Inlet Management'

INLET ON A CONTINUOUS GRADE

Version 4.05 Released March 2017

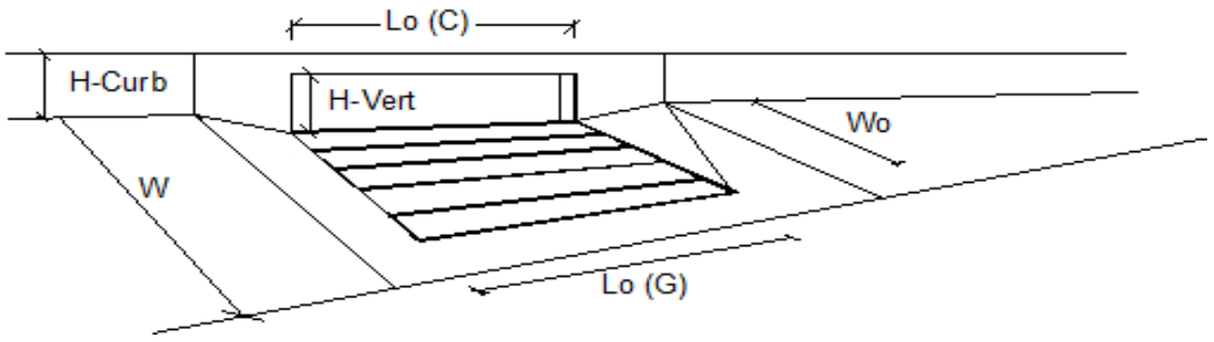

Design Information (Input)		MINOR	MAJOR	
Type of Inlet	Type =	CDOT Type R Curb Opening		
Local Depression (additional to continuous gutter depression 'a')	a_{LOCAL} =	3.0	3.0	inches
Total Number of Units in the Inlet (Grate or Curb Opening)	No =	1	1	
Length of a Single Unit Inlet (Grate or Curb Opening)	L_o =	15.00	15.00	ft
Width of a Unit Grate (cannot be greater than W, Gutter Width)	W_o =	N/A	N/A	ft
Clogging Factor for a Single Unit Grate (typical min. value = 0.5)	C_f-G =	N/A	N/A	
Clogging Factor for a Single Unit Curb Opening (typical min. value = 0.1)	C_f-C =	0.10	0.10	

Street Hydraulics: OK - Q < Allowable Street Capacity'		MINOR	MAJOR	
Total Inlet Interception Capacity	**Q =**	**4.1**	**7.9**	**cfs**
Total Inlet Carry-Over Flow (flow bypassing inlet)	**Q_b =**	**0.0**	**0.2**	**cfs**
Capture Percentage = Q_a/Q_o =	**C% =**	**100**	**98**	**%**

Version 4.05 Released March 2017

ALLOWABLE CAPACITY FOR ONE-HALF OF STREET (Minor & Major Storm)

(Based on Regulated Criteria for Maximum Allowable Flow Depth and Spread)

Project: Enter Your Project Name Here

Inlet ID: DP-11 INLET

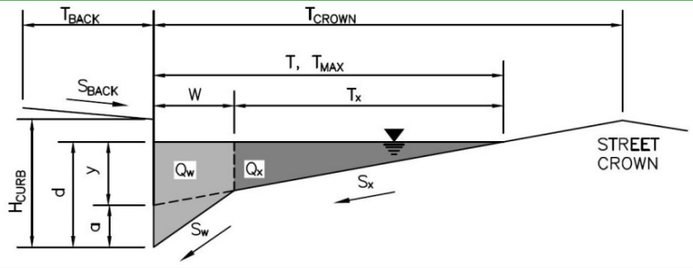

Gutter Geometry (Enter data in the blue cells)

Maximum Allowable Width for Spread Behind Curb	T_{BACK} =	7.5	ft
Side Slope Behind Curb (leave blank for no conveyance credit behind curb)	S_{BACK} =	0.020	ft/ft
Manning's Roughness Behind Curb (typically between 0.012 and 0.020)	n_{BACK} =	0.013	
Height of Curb at Gutter Flow Line	H_{CURB} =	6.00	inches
Distance from Curb Face to Street Crown	T_{CROWN} =	17.0	ft
Gutter Width	W =	2.00	ft
Street Transverse Slope	S_X =	0.020	ft/ft
Gutter Cross Slope (typically 2 inches over 24 inches or 0.083 ft/ft)	S_W =	0.083	ft/ft
Street Longitudinal Slope - Enter 0 for sump condition	S_O =	0.040	ft/ft
Manning's Roughness for Street Section (typically between 0.012 and 0.020)	n_{STREET} =	0.016	

		Minor Storm	Major Storm	
Max. Allowable Spread for Minor & Major Storm	T_{MAX} =	17.0	17.0	ft
Max. Allowable Depth at Gutter Flowline for Minor & Major Storm	d_{MAX} =	5.1	7.8	inches
Allow Flow Depth at Street Crown (leave blank for no)		☐	☑	check = yes

		Minor Storm	Major Storm	
MINOR STORM Allowable Capacity is based on Depth Criterion				
MAJOR STORM Allowable Capacity is based on Depth Criterion	**Q_{allow} =**	**15.9**	**30.7**	**cfs**

Minor storm max. allowable capacity GOOD - greater than the design flow given on sheet 'Inlet Management'

Major storm max. allowable capacity GOOD - greater than the design flow given on sheet 'Inlet Management'

INLET ON A CONTINUOUS GRADE

Version 4.05 Released March 2017

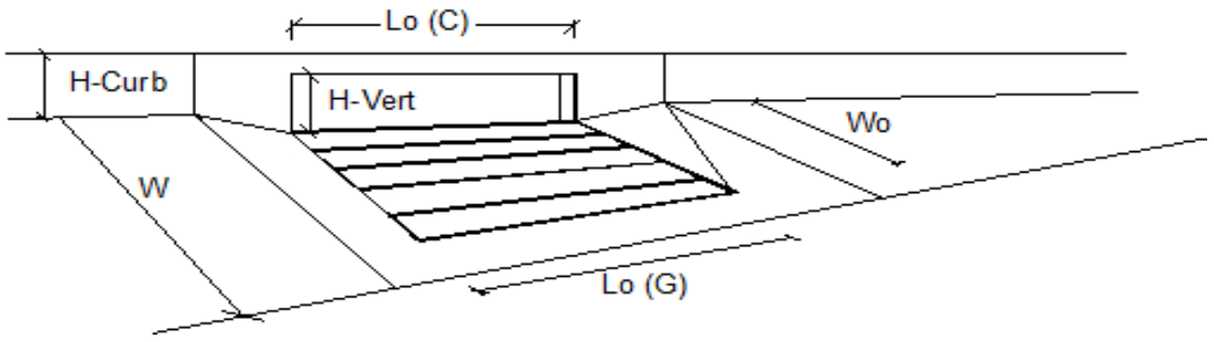

Design Information (Input)		MINOR	MAJOR	
Type of Inlet	Type =	CDOT Type R Curb Opening		
Local Depression (additional to continuous gutter depression 'a')	a_{LOCAL} =	3.0	3.0	inches
Total Number of Units in the Inlet (Grate or Curb Opening)	No =	1	1	
Length of a Single Unit Inlet (Grate or Curb Opening)	L_o =	15.00	15.00	ft
Width of a Unit Grate (cannot be greater than W, Gutter Width)	W_o =	N/A	N/A	ft
Clogging Factor for a Single Unit Grate (typical min. value = 0.5)	C_f-G =	N/A	N/A	
Clogging Factor for a Single Unit Curb Opening (typical min. value = 0.1)	C_f-C =	0.10	0.10	

Street Hydraulics: OK - Q < Allowable Street Capacity'		MINOR	MAJOR	
Total Inlet Interception Capacity	**Q =**	**7.3**	**12.5**	**cfs**
Total Inlet Carry-Over Flow (flow bypassing inlet)	**Q_b =**	**0.0**	**3.6**	**cfs**
Capture Percentage = Q_a/Q_o =	**C% =**	**99**	**77**	**%**

Version 4.05 Released March 2017

ALLOWABLE CAPACITY FOR ONE-HALF OF STREET (Minor & Major Storm)

(Based on Regulated Criteria for Maximum Allowable Flow Depth and Spread)

Project: Enter Your Project Name Here

Inlet ID: DP-12 INLET

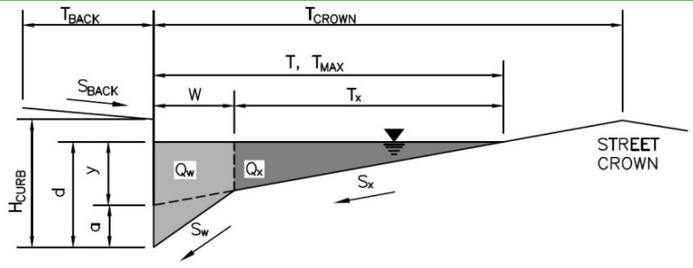

Gutter Geometry (Enter data in the blue cells)

Maximum Allowable Width for Spread Behind Curb	T_{BACK} =	7.5	ft
Side Slope Behind Curb (leave blank for no conveyance credit behind curb)	S_{BACK} =	0.020	ft/ft
Manning's Roughness Behind Curb (typically between 0.012 and 0.020)	n_{BACK} =	0.013	
Height of Curb at Gutter Flow Line	H_{CURB} =	6.00	inches
Distance from Curb Face to Street Crown	T_{CROWN} =	17.0	ft
Gutter Width	W =	2.00	ft
Street Transverse Slope	S_X =	0.020	ft/ft
Gutter Cross Slope (typically 2 inches over 24 inches or 0.083 ft/ft)	S_W =	0.083	ft/ft
Street Longitudinal Slope - Enter 0 for sump condition	S_O =	0.040	ft/ft
Manning's Roughness for Street Section (typically between 0.012 and 0.020)	n_{STREET} =	0.016	

		Minor Storm	Major Storm	
Max. Allowable Spread for Minor & Major Storm	T_{MAX} =	17.0	17.0	ft
Max. Allowable Depth at Gutter Flowline for Minor & Major Storm	d_{MAX} =	5.1	7.8	inches
Allow Flow Depth at Street Crown (leave blank for no)		☐	☑	check = yes

		Minor Storm	Major Storm	
MINOR STORM Allowable Capacity is based on Depth Criterion				
MAJOR STORM Allowable Capacity is based on Depth Criterion	**Q_{allow} =**	**15.9**	**30.7**	**cfs**

Minor storm max. allowable capacity GOOD - greater than the design flow given on sheet 'Inlet Management'

Major storm max. allowable capacity GOOD - greater than the design flow given on sheet 'Inlet Management'

INLET ON A CONTINUOUS GRADE

Version 4.05 Released March 2017

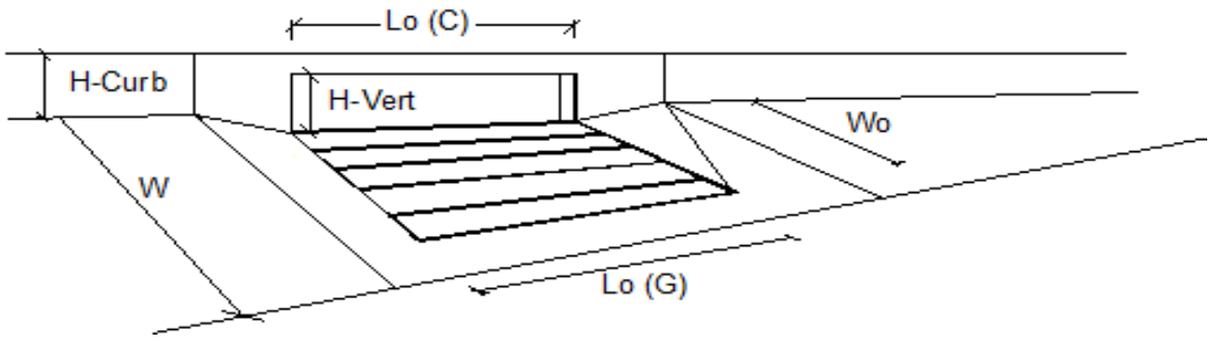

Design Information (Input)		MINOR	MAJOR	
Type of Inlet	Type =	CDOT Type R Curb Opening		
Local Depression (additional to continuous gutter depression 'a')	a_{LOCAL} =	3.0	3.0	inches
Total Number of Units in the Inlet (Grate or Curb Opening)	No =	1	1	
Length of a Single Unit Inlet (Grate or Curb Opening)	L_o =	15.00	15.00	ft
Width of a Unit Grate (cannot be greater than W, Gutter Width)	W_o =	N/A	N/A	ft
Clogging Factor for a Single Unit Grate (typical min. value = 0.5)	C_f-G =	N/A	N/A	
Clogging Factor for a Single Unit Curb Opening (typical min. value = 0.1)	C_f-C =	0.10	0.10	

Street Hydraulics: OK - Q < Allowable Street Capacity'		MINOR	MAJOR	
Total Inlet Interception Capacity	**Q =**	**5.7**	**14.7**	**cfs**
Total Inlet Carry-Over Flow (flow bypassing inlet)	**Q_b =**	**0.0**	**7.2**	**cfs**
Capture Percentage = Q_a/Q_o =	**C% =**	**100**	**67**	**%**

Version 4.05 Released March 2017

ALLOWABLE CAPACITY FOR ONE-HALF OF STREET (Minor & Major Storm)

(Based on Regulated Criteria for Maximum Allowable Flow Depth and Spread)

Project: Enter Your Project Name Here

Inlet ID: DP-13 INLET

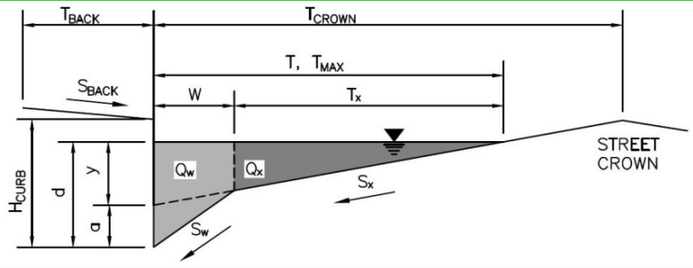

Gutter Geometry (Enter data in the blue cells)

Maximum Allowable Width for Spread Behind Curb	T_{BACK} =	7.5	ft
Side Slope Behind Curb (leave blank for no conveyance credit behind curb)	S_{BACK} =	0.020	ft/ft
Manning's Roughness Behind Curb (typically between 0.012 and 0.020)	n_{BACK} =	0.020	
Height of Curb at Gutter Flow Line	H_{CURB} =	6.00	inches
Distance from Curb Face to Street Crown	T_{CROWN} =	17.0	ft
Gutter Width	W =	2.00	ft
Street Transverse Slope	S_X =	0.020	ft/ft
Gutter Cross Slope (typically 2 inches over 24 inches or 0.083 ft/ft)	S_W =	0.083	ft/ft
Street Longitudinal Slope - Enter 0 for sump condition	S_O =	0.040	ft/ft
Manning's Roughness for Street Section (typically between 0.012 and 0.020)	n_{STREET} =	0.016	

		Minor Storm	Major Storm	
Max. Allowable Spread for Minor & Major Storm	T_{MAX} =	17.0	17.0	ft
Max. Allowable Depth at Gutter Flowline for Minor & Major Storm	d_{MAX} =	5.1	7.8	inches
Allow Flow Depth at Street Crown (leave blank for no)		☐	☑	check = yes

		Minor Storm	Major Storm	
MINOR STORM Allowable Capacity is based on Depth Criterion				
MAJOR STORM Allowable Capacity is based on Depth Criterion	**Q_{allow} =**	**15.9**	**30.2**	**cfs**

Minor storm max. allowable capacity GOOD - greater than the design flow given on sheet 'Inlet Management'

Major storm max. allowable capacity GOOD - greater than the design flow given on sheet 'Inlet Management'

INLET ON A CONTINUOUS GRADE

Version 4.05 Released March 2017

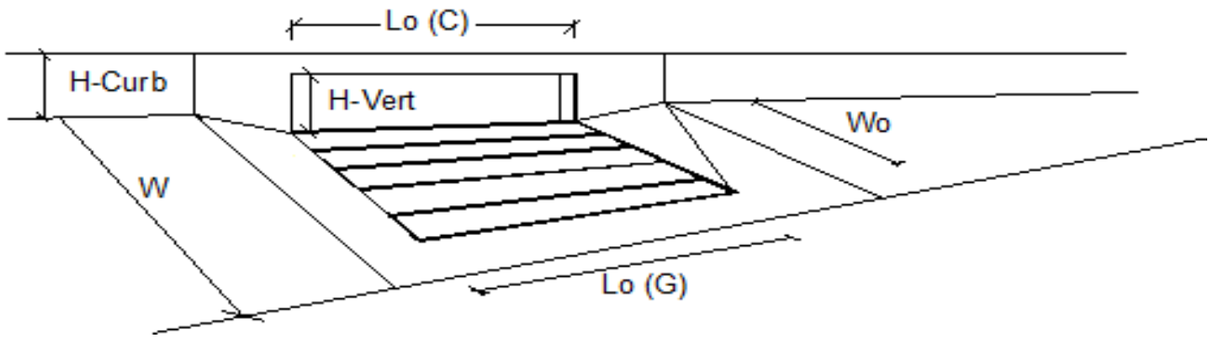

Design Information (Input)		MINOR	MAJOR	
Type of Inlet	Type =	CDOT Type R Curb Opening		
Local Depression (additional to continuous gutter depression 'a')	a_{LOCAL} =	3.0	3.0	inches
Total Number of Units in the Inlet (Grate or Curb Opening)	No =	1	1	
Length of a Single Unit Inlet (Grate or Curb Opening)	L_o =	15.00	15.00	ft
Width of a Unit Grate (cannot be greater than W, Gutter Width)	W_o =	N/A	N/A	ft
Clogging Factor for a Single Unit Grate (typical min. value = 0.5)	C_f-G =	N/A	N/A	
Clogging Factor for a Single Unit Curb Opening (typical min. value = 0.1)	C_f-C =	0.10	0.10	

Street Hydraulics: OK - Q < Allowable Street Capacity'		MINOR	MAJOR	
Total Inlet Interception Capacity	**Q =**	**5.1**	**13.0**	**cfs**
Total Inlet Carry-Over Flow (flow bypassing inlet)	**Q_b =**	**0.0**	**4.3**	**cfs**
Capture Percentage = Q_a/Q_o =	**C% =**	**100**	**75**	**%**

Version 4.05 Released March 2017

ALLOWABLE CAPACITY FOR ONE-HALF OF STREET (Minor & Major Storm)

(Based on Regulated Criteria for Maximum Allowable Flow Depth and Spread)

Project: Enter Your Project Name Here

Inlet ID: DP-14 INLET

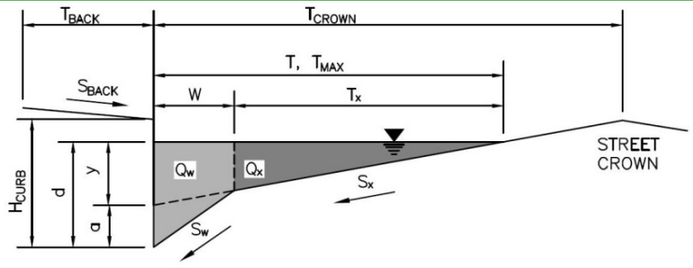

Gutter Geometry (Enter data in the blue cells)

Maximum Allowable Width for Spread Behind Curb	T_{BACK} =	7.5	ft
Side Slope Behind Curb (leave blank for no conveyance credit behind curb)	S_{BACK} =	0.020	ft/ft
Manning's Roughness Behind Curb (typically between 0.012 and 0.020)	n_{BACK} =	0.013	
Height of Curb at Gutter Flow Line	H_{CURB} =	6.00	inches
Distance from Curb Face to Street Crown	T_{CROWN} =	17.0	ft
Gutter Width	W =	2.00	ft
Street Transverse Slope	S_X =	0.020	ft/ft
Gutter Cross Slope (typically 2 inches over 24 inches or 0.083 ft/ft)	S_W =	0.083	ft/ft
Street Longitudinal Slope - Enter 0 for sump condition	S_O =	0.000	ft/ft
Manning's Roughness for Street Section (typically between 0.012 and 0.020)	n_{STREET} =	0.016	

		Minor Storm	Major Storm	
Max. Allowable Spread for Minor & Major Storm	T_{MAX} =	17.0	17.0	ft
Max. Allowable Depth at Gutter Flowline for Minor & Major Storm	d_{MAX} =	5.1	7.8	inches
Check boxes are not applicable in SUMP conditions		☐	☐	

		Minor Storm	Major Storm	
MINOR STORM Allowable Capacity is based on Depth Criterion				
MAJOR STORM Allowable Capacity is based on Depth Criterion	**Q_{allow} =**	**SUMP**	**SUMP**	**cfs**

INLET IN A SUMP OR SAG LOCATION

Version 4.05 Released March 2017

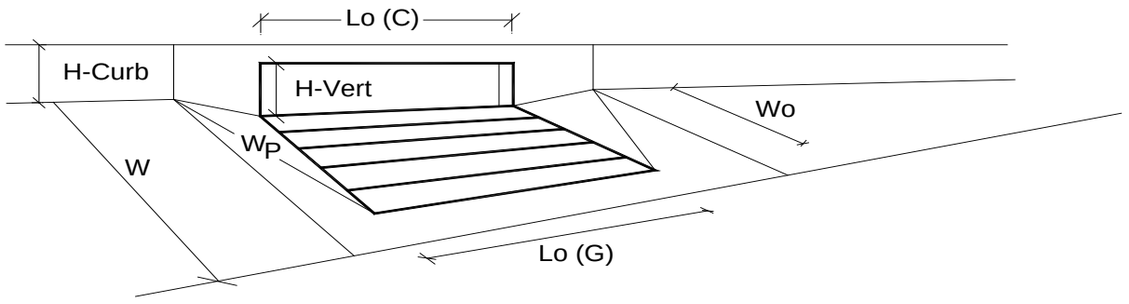

Design Information (Input)		MINOR	MAJOR	
Type of Inlet	Type =	CDOT Type R Curb Opening		
Local Depression (additional to continuous gutter depression 'a' from above)	a_{local} =	3.00	3.00	inches
Number of Unit Inlets (Grate or Curb Opening)	No =	1	1	
Water Depth at Flowline (outside of local depression)	Ponding Depth =	5.1	7.8	inches
Grate Information		MINOR	MAJOR	☑ Override Depths
Length of a Unit Grate	L_o (G) =	N/A	N/A	feet
Width of a Unit Grate	W_o =	N/A	N/A	feet
Area Opening Ratio for a Grate (typical values 0.15-0.90)	A_{ratio} =	N/A	N/A	
Clogging Factor for a Single Grate (typical value 0.50 - 0.70)	C_f (G) =	N/A	N/A	
Grate Weir Coefficient (typical value 2.15 - 3.60)	C_w (G) =	N/A	N/A	
Grate Orifice Coefficient (typical value 0.60 - 0.80)	C_o (G) =	N/A	N/A	
Curb Opening Information		MINOR	MAJOR	
Length of a Unit Curb Opening	L_o (C) =	10.00	10.00	feet
Height of Vertical Curb Opening in Inches	H_{vert} =	6.00	6.00	inches
Height of Curb Orifice Throat in Inches	H_{throat} =	6.00	6.00	inches
Angle of Throat (see USDCM Figure ST-5)	Theta =	63.40	63.40	degrees
Side Width for Depression Pan (typically the gutter width of 2 feet)	W_p =	2.00	2.00	feet
Clogging Factor for a Single Curb Opening (typical value 0.10)	C_f (C) =	0.10	0.10	
Curb Opening Weir Coefficient (typical value 2.3-3.7)	C_w (C) =	3.60	3.60	
Curb Opening Orifice Coefficient (typical value 0.60 - 0.70)	C_o (C) =	0.67	0.67	

Low Head Performance Reduction (Calculated)		MINOR	MAJOR	
Depth for Grate Midwidth	d_{Grate} =	N/A	N/A	ft
Depth for Curb Opening Weir Equation	d_{Curb} =	0.26	0.48	ft
Combination Inlet Performance Reduction Factor for Long Inlets	$RF_{Combination}$ =	0.48	0.74	
Curb Opening Performance Reduction Factor for Long Inlets	RF_{Curb} =	0.88	1.00	
Grated Inlet Performance Reduction Factor for Long Inlets	RF_{Grate} =	N/A	N/A	

		MINOR	MAJOR	
Total Inlet Interception Capacity (assumes clogged condition)	**Q_a =**	**5.3**	**15.5**	**cfs**
Inlet Capacity IS GOOD for Minor and Major Storms(>Q PEAK)	$Q_{PEAK\ REQUIRED}$ =	3.7	7.1	cfs

Version 4.05 Released March 2017

ALLOWABLE CAPACITY FOR ONE-HALF OF STREET (Minor & Major Storm)

(Based on Regulated Criteria for Maximum Allowable Flow Depth and Spread)

Project: Enter Your Project Name Here

Inlet ID: DP-15 INLET

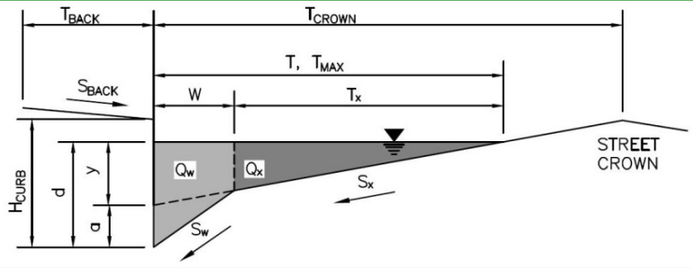

Gutter Geometry (Enter data in the blue cells)

Maximum Allowable Width for Spread Behind Curb	T_{BACK} =	7.5	ft
Side Slope Behind Curb (leave blank for no conveyance credit behind curb)	S_{BACK} =	0.020	ft/ft
Manning's Roughness Behind Curb (typically between 0.012 and 0.020)	n_{BACK} =	0.013	
Height of Curb at Gutter Flow Line	H_{CURB} =	6.00	inches
Distance from Curb Face to Street Crown	T_{CROWN} =	17.0	ft
Gutter Width	W =	2.00	ft
Street Transverse Slope	S_X =	0.020	ft/ft
Gutter Cross Slope (typically 2 inches over 24 inches or 0.083 ft/ft)	S_W =	0.083	ft/ft
Street Longitudinal Slope - Enter 0 for sump condition	S_O =	0.000	ft/ft
Manning's Roughness for Street Section (typically between 0.012 and 0.020)	n_{STREET} =	0.016	

		Minor Storm	Major Storm	
Max. Allowable Spread for Minor & Major Storm	T_{MAX} =	17.0	17.0	ft
Max. Allowable Depth at Gutter Flowline for Minor & Major Storm	d_{MAX} =	5.1	7.8	inches
Check boxes are not applicable in SUMP conditions		☐	☐	

		Minor Storm	Major Storm	
MINOR STORM Allowable Capacity is based on Depth Criterion				
MAJOR STORM Allowable Capacity is based on Depth Criterion	**Q_{allow} =**	**SUMP**	**SUMP**	**cfs**

INLET IN A SUMP OR SAG LOCATION

Version 4.05 Released March 2017

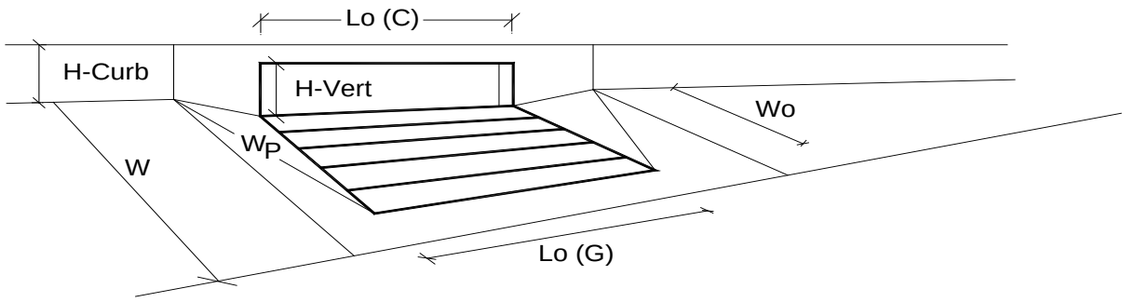

Design Information (Input)		MINOR	MAJOR	
Type of Inlet	Type =	CDOT Type R Curb Opening		
Local Depression (additional to continuous gutter depression 'a' from above)	a_{local} =	3.00	3.00	inches
Number of Unit Inlets (Grate or Curb Opening)	No =	1	1	
Water Depth at Flowline (outside of local depression)	Ponding Depth =	5.1	7.8	inches
Grate Information		MINOR	MAJOR	☑ Override Depths
Length of a Unit Grate	L_o (G) =	N/A	N/A	feet
Width of a Unit Grate	W_o =	N/A	N/A	feet
Area Opening Ratio for a Grate (typical values 0.15-0.90)	A_{ratio} =	N/A	N/A	
Clogging Factor for a Single Grate (typical value 0.50 - 0.70)	C_f (G) =	N/A	N/A	
Grate Weir Coefficient (typical value 2.15 - 3.60)	C_w (G) =	N/A	N/A	
Grate Orifice Coefficient (typical value 0.60 - 0.80)	C_o (G) =	N/A	N/A	
Curb Opening Information		MINOR	MAJOR	
Length of a Unit Curb Opening	L_o (C) =	15.00	15.00	feet
Height of Vertical Curb Opening in Inches	H_{vert} =	6.00	6.00	inches
Height of Curb Orifice Throat in Inches	H_{throat} =	6.00	6.00	inches
Angle of Throat (see USDCM Figure ST-5)	Theta =	63.40	63.40	degrees
Side Width for Depression Pan (typically the gutter width of 2 feet)	W_p =	2.00	2.00	feet
Clogging Factor for a Single Curb Opening (typical value 0.10)	C_f (C) =	0.10	0.10	
Curb Opening Weir Coefficient (typical value 2.3-3.7)	C_w (C) =	3.60	3.60	
Curb Opening Orifice Coefficient (typical value 0.60 - 0.70)	C_o (C) =	0.67	0.67	

Low Head Performance Reduction (Calculated)		MINOR	MAJOR	
Depth for Grate Midwidth	d_{Grate} =	N/A	N/A	ft
Depth for Curb Opening Weir Equation	d_{Curb} =	0.26	0.48	ft
Combination Inlet Performance Reduction Factor for Long Inlets	$RF_{Combination}$ =	0.48	0.74	
Curb Opening Performance Reduction Factor for Long Inlets	RF_{Curb} =	0.73	0.88	
Grated Inlet Performance Reduction Factor for Long Inlets	RF_{Grate} =	N/A	N/A	

		MINOR	MAJOR	
Total Inlet Interception Capacity (assumes clogged condition)	**Q_a =**	**6.1**	**19.1**	**cfs**
Inlet Capacity IS GOOD for Minor and Major Storms(>Q PEAK)	$Q_{PEAK\ REQUIRED}$ =	2.1	18.5	cfs

Version 4.05 Released March 2017

ALLOWABLE CAPACITY FOR ONE-HALF OF STREET (Minor & Major Storm)

(Based on Regulated Criteria for Maximum Allowable Flow Depth and Spread)

Project: Enter Your Project Name Here

Inlet ID: DP-16 INLET

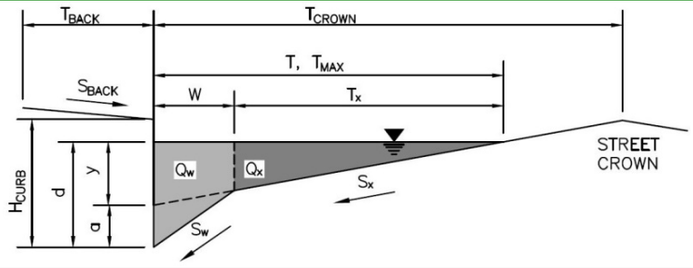

Gutter Geometry (Enter data in the blue cells)

Maximum Allowable Width for Spread Behind Curb	T_{BACK} =	7.5	ft
Side Slope Behind Curb (leave blank for no conveyance credit behind curb)	S_{BACK} =	0.020	ft/ft
Manning's Roughness Behind Curb (typically between 0.012 and 0.020)	n_{BACK} =	0.013	
Height of Curb at Gutter Flow Line	H_{CURB} =	6.00	inches
Distance from Curb Face to Street Crown	T_{CROWN} =	17.0	ft
Gutter Width	W =	2.00	ft
Street Transverse Slope	S_X =	0.020	ft/ft
Gutter Cross Slope (typically 2 inches over 24 inches or 0.083 ft/ft)	S_W =	0.083	ft/ft
Street Longitudinal Slope - Enter 0 for sump condition	S_O =	0.000	ft/ft
Manning's Roughness for Street Section (typically between 0.012 and 0.020)	n_{STREET} =	0.016	

		Minor Storm	Major Storm	
Max. Allowable Spread for Minor & Major Storm	T_{MAX} =	17.0	17.0	ft
Max. Allowable Depth at Gutter Flowline for Minor & Major Storm	d_{MAX} =	5.1	7.8	inches
Check boxes are not applicable in SUMP conditions		☐	☐	

		Minor Storm	Major Storm	
MINOR STORM Allowable Capacity is based on Depth Criterion				
MAJOR STORM Allowable Capacity is based on Depth Criterion	**Q_{allow} =**	**SUMP**	**SUMP**	**cfs**

INLET IN A SUMP OR SAG LOCATION

Version 4.05 Released March 2017

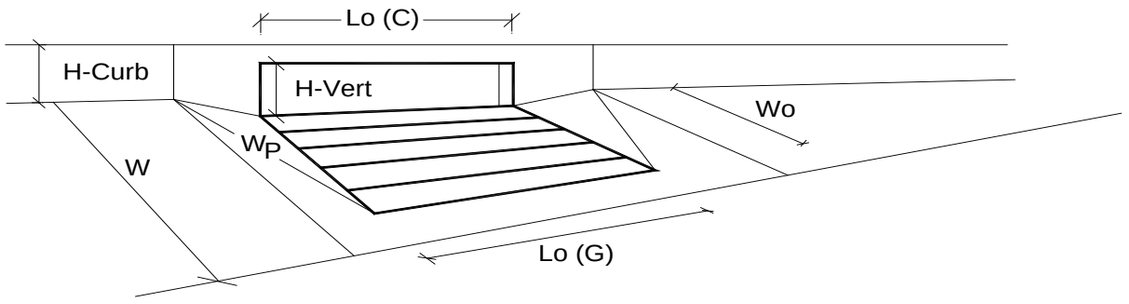

Design Information (Input)		MINOR	MAJOR	
Type of Inlet	Type =	CDOT Type R Curb Opening		
Local Depression (additional to continuous gutter depression 'a' from above)	a_{local} =	3.00	3.00	inches
Number of Unit Inlets (Grate or Curb Opening)	No =	1	1	
Water Depth at Flowline (outside of local depression)	Ponding Depth =	5.1	7.8	inches
Grate Information		MINOR	MAJOR	☑ Override Depths
Length of a Unit Grate	L_o (G) =	N/A	N/A	feet
Width of a Unit Grate	W_o =	N/A	N/A	feet
Area Opening Ratio for a Grate (typical values 0.15-0.90)	A_{ratio} =	N/A	N/A	
Clogging Factor for a Single Grate (typical value 0.50 - 0.70)	C_f (G) =	N/A	N/A	
Grate Weir Coefficient (typical value 2.15 - 3.60)	C_w (G) =	N/A	N/A	
Grate Orifice Coefficient (typical value 0.60 - 0.80)	C_o (G) =	N/A	N/A	
Curb Opening Information		MINOR	MAJOR	
Length of a Unit Curb Opening	L_o (C) =	5.00	5.00	feet
Height of Vertical Curb Opening in Inches	H_{vert} =	6.00	6.00	inches
Height of Curb Orifice Throat in Inches	H_{throat} =	6.00	6.00	inches
Angle of Throat (see USDCM Figure ST-5)	Theta =	63.40	63.40	degrees
Side Width for Depression Pan (typically the gutter width of 2 feet)	W_p =	2.00	2.00	feet
Clogging Factor for a Single Curb Opening (typical value 0.10)	C_f (C) =	0.10	0.10	
Curb Opening Weir Coefficient (typical value 2.3-3.7)	C_w (C) =	3.60	3.60	
Curb Opening Orifice Coefficient (typical value 0.60 - 0.70)	C_o (C) =	0.67	0.67	

Low Head Performance Reduction (Calculated)		MINOR	MAJOR	
Depth for Grate Midwidth	d_{Grate} =	N/A	N/A	ft
Depth for Curb Opening Weir Equation	d_{Curb} =	0.26	0.48	ft
Combination Inlet Performance Reduction Factor for Long Inlets	$RF_{Combination}$ =	0.65	1.00	
Curb Opening Performance Reduction Factor for Long Inlets	RF_{Curb} =	1.00	1.00	
Grated Inlet Performance Reduction Factor for Long Inlets	RF_{Grate} =	N/A	N/A	

		MINOR	MAJOR	
Total Inlet Interception Capacity (assumes clogged condition)	**Q_a =**	**3.7**	**9.0**	**cfs**
Inlet Capacity IS GOOD for Minor and Major Storms(>Q PEAK)	$Q_{PEAK\ REQUIRED}$ =	1.5	2.8	cfs

Version 4.05 Released March 2017

ALLOWABLE CAPACITY FOR ONE-HALF OF STREET (Minor & Major Storm)

(Based on Regulated Criteria for Maximum Allowable Flow Depth and Spread)

Project: Enter Your Project Name Here

Inlet ID: DP-17 INLET

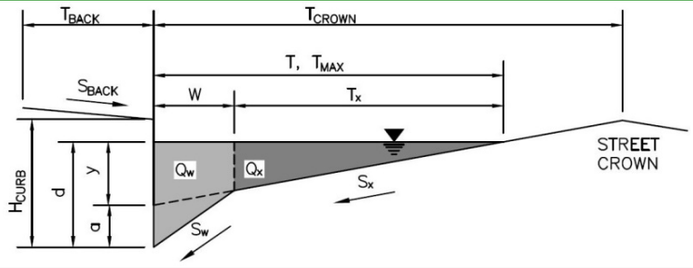

Gutter Geometry (Enter data in the blue cells)

Maximum Allowable Width for Spread Behind Curb	T_{BACK} =	7.5	ft
Side Slope Behind Curb (leave blank for no conveyance credit behind curb)	S_{BACK} =	0.020	ft/ft
Manning's Roughness Behind Curb (typically between 0.012 and 0.020)	n_{BACK} =	0.013	
Height of Curb at Gutter Flow Line	H_{CURB} =	6.00	inches
Distance from Curb Face to Street Crown	T_{CROWN} =	17.0	ft
Gutter Width	W =	2.00	ft
Street Transverse Slope	S_X =	0.020	ft/ft
Gutter Cross Slope (typically 2 inches over 24 inches or 0.083 ft/ft)	S_W =	0.083	ft/ft
Street Longitudinal Slope - Enter 0 for sump condition	S_O =	0.000	ft/ft
Manning's Roughness for Street Section (typically between 0.012 and 0.020)	n_{STREET} =	0.016	

		Minor Storm	Major Storm	
Max. Allowable Spread for Minor & Major Storm	T_{MAX} =	17.0	17.0	ft
Max. Allowable Depth at Gutter Flowline for Minor & Major Storm	d_{MAX} =	5.1	7.8	inches
Check boxes are not applicable in SUMP conditions		☐	☐	

		Minor Storm	Major Storm	
MINOR STORM Allowable Capacity is based on Depth Criterion				
MAJOR STORM Allowable Capacity is based on Depth Criterion	**Q_{allow} =**	**SUMP**	**SUMP**	**cfs**

INLET IN A SUMP OR SAG LOCATION

Version 4.05 Released March 2017

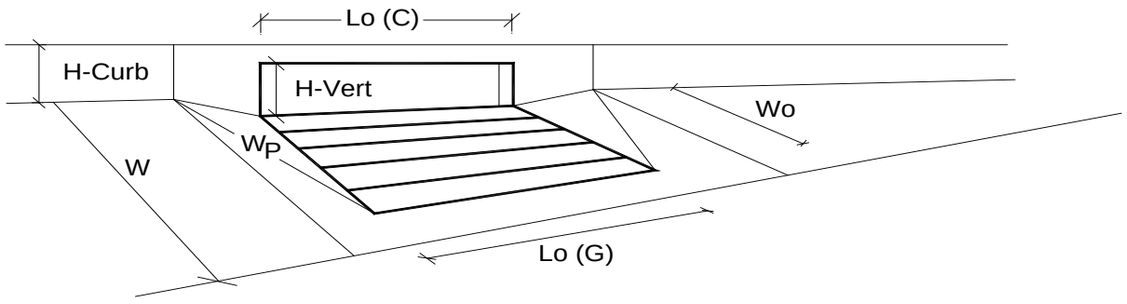

Design Information (Input)		MINOR	MAJOR	
Type of Inlet	Type =	CDOT Type R Curb Opening		
Local Depression (additional to continuous gutter depression 'a' from above)	a_{local} =	3.00	3.00	inches
Number of Unit Inlets (Grate or Curb Opening)	No =	1	1	
Water Depth at Flowline (outside of local depression)	Ponding Depth =	5.1	7.8	inches
Grate Information		MINOR	MAJOR	☑ Override Depths
Length of a Unit Grate	L_o (G) =	N/A	N/A	feet
Width of a Unit Grate	W_o =	N/A	N/A	feet
Area Opening Ratio for a Grate (typical values 0.15-0.90)	A_{ratio} =	N/A	N/A	
Clogging Factor for a Single Grate (typical value 0.50 - 0.70)	C_f (G) =	N/A	N/A	
Grate Weir Coefficient (typical value 2.15 - 3.60)	C_w (G) =	N/A	N/A	
Grate Orifice Coefficient (typical value 0.60 - 0.80)	C_o (G) =	N/A	N/A	
Curb Opening Information		MINOR	MAJOR	
Length of a Unit Curb Opening	L_o (C) =	5.00	5.00	feet
Height of Vertical Curb Opening in Inches	H_{vert} =	6.00	6.00	inches
Height of Curb Orifice Throat in Inches	H_{throat} =	6.00	6.00	inches
Angle of Throat (see USDCM Figure ST-5)	Theta =	63.40	63.40	degrees
Side Width for Depression Pan (typically the gutter width of 2 feet)	W_p =	2.00	2.00	feet
Clogging Factor for a Single Curb Opening (typical value 0.10)	C_f (C) =	0.10	0.10	
Curb Opening Weir Coefficient (typical value 2.3-3.7)	C_w (C) =	3.60	3.60	
Curb Opening Orifice Coefficient (typical value 0.60 - 0.70)	C_o (C) =	0.67	0.67	

Low Head Performance Reduction (Calculated)		MINOR	MAJOR	
Depth for Grate Midwidth	d_{Grate} =	N/A	N/A	ft
Depth for Curb Opening Weir Equation	d_{Curb} =	0.26	0.48	ft
Combination Inlet Performance Reduction Factor for Long Inlets	$RF_{Combination}$ =	0.65	1.00	
Curb Opening Performance Reduction Factor for Long Inlets	RF_{Curb} =	1.00	1.00	
Grated Inlet Performance Reduction Factor for Long Inlets	RF_{Grate} =	N/A	N/A	

		MINOR	MAJOR	
Total Inlet Interception Capacity (assumes clogged condition)	**Q_a =**	**3.7**	**9.0**	**cfs**
Inlet Capacity IS GOOD for Minor and Major Storms(>Q PEAK)	$Q_{PEAK\ REQUIRED}$ =	1.7	3.4	cfs

Worksheet for POND OUTFALL-SEC31A

Project Description	
Friction Method	Manning Formula
Solve For	Normal Depth

Input Data	
Roughness Coefficient	0.013
Channel Slope	0.006 ft/ft
Bottom Width	26.60 ft
Discharge	60.00 cfs

Results	
Normal Depth	5.4 in
Flow Area	11.9 ft²
Wetted Perimeter	27.5 ft
Hydraulic Radius	5.2 in
Top Width	26.60 ft
Critical Depth	6.5 in
Critical Slope	0.003 ft/ft
Velocity	5.06 ft/s
Velocity Head	0.40 ft
Specific Energy	0.84 ft
Froude Number	1.335
Flow Type	Supercritical

GVF Input Data	
Downstream Depth	0.0 in
Length	0.0 ft
Number Of Steps	0

GVF Output Data	
Upstream Depth	0.0 in
Profile Description	N/A
Profile Headloss	0.00 ft
Downstream Velocity	Infinity ft/s
Upstream Velocity	Infinity ft/s
Normal Depth	5.4 in
Critical Depth	6.5 in
Channel Slope	0.006 ft/ft
Critical Slope	0.003 ft/ft

Worksheet for EX. CH-SEC31B

Project Description	
Friction Method	Manning Formula
Solve For	Normal Depth

Input Data	
Channel Slope	0.075 ft/ft
Discharge	60.00 cfs

Section Definitions

Station (ft)	Elevation (ft)
1+01	7,047.75
1+09	7,047.74
1+15	7,047.61
1+19	7,046.61
1+23	7,046.86
1+26	7,048.00
1+31	7,048.44
1+38	7,048.51

Roughness Segment Definitions

Start Station	Ending Station	Roughness Coefficient
(1+01, 7,047.75)	(1+38, 7,048.51)	0.050

Options	
Current Roughness Weighted Method	Pavlovskii's Method
Open Channel Weighting Method	Pavlovskii's Method
Closed Channel Weighting Method	Pavlovskii's Method

Results	
Normal Depth	15.6 in
Elevation Range	7,046.6 to 7,048.5 ft
Flow Area	12.0 ft²
Wetted Perimeter	25.1 ft
Hydraulic Radius	5.7 in
Top Width	24.60 ft
Normal Depth	15.6 in
Critical Depth	16.5 in
Critical Slope	0.046 ft/ft
Velocity	4.98 ft/s
Velocity Head	0.39 ft
Specific Energy	1.68 ft
Froude Number	1.256

Worksheet for EX. CH-SEC31B

Results	
Flow Type	Supercritical

GVF Input Data	
Downstream Depth	0.0 in
Length	0.0 ft
Number Of Steps	0

GVF Output Data	
Upstream Depth	0.0 in
Profile Description	N/A
Profile Headloss	0.00 ft
Downstream Velocity	Infinity ft/s
Upstream Velocity	Infinity ft/s
Normal Depth	15.6 in
Critical Depth	16.5 in
Channel Slope	0.075 ft/ft
Critical Slope	0.046 ft/ft

Rock Chute Design Data

(Version 4.01 - 04/23/03, Based on Design of Rock Chutes by Robinson, Rice, Kadavy, ASAE, 1998)

Project: Forest Lakes Filing 6 - End of Road
Designer: Matt Larson
Date: 10/13/2020

County: EL Paso
Checked by:
Date:

Input Channel Geometry

→ Inlet Channel	→ Chute	→ Outlet Channel
Bw = 30.0 ft.	Bw = 20.0 ft.	Bw = 10.0 ft.
Side slopes = 3.0 (m:1)	Factor of safety = 1.20 (F_s)	Side slopes = 3.0 (m:1)
n-value = 0.035	Side slopes = 3.0 (m:1) → 2.0:1 max.	n-value = 0.035
Bed slope = 0.0050 ft./ft.	Bed slope (3:1) = 0.333 ft./ft. → 2.5:1 max.	Bed slope = 0.0050 ft./ft.
Freeboard = 2.0 ft.	Outlet apron depth, d = 1.5 ft.	Base flow = 0.0 cfs

Design Storm Data (Table 2, NHCP, NRCS Grade Stabilization Structure No. 410)

Drainage area = 3.0 acres
Rainfall = ○ 0 - 3 in. ◉ 3 - 5 in. ○ 5+ in.
Apron elev. --- Inlet = 7228.0 ft. --- Outlet = 7224.0 ft. --- (H_{drop} = 2.5 ft.)
Chute capacity = Q5-year
Total capacity = Q10-year
Minimum capacity (based on a 5-year, 24-hour storm with a 3 - 5 inch rainfall)
Q_{high} = 10.0 cfs — High flow storm through chute → Tw (ft.) = Program
Q_{low} = 3.0 cfs — Low flow storm through chute → Tw (ft.) = Program

***Note**: The total required capacity is routed through the chute (principal spillway) or in combination with an auxiliary spillway.*
***Input tailwater (Tw)**:*
0.33

Profile and Cross Section (Output)

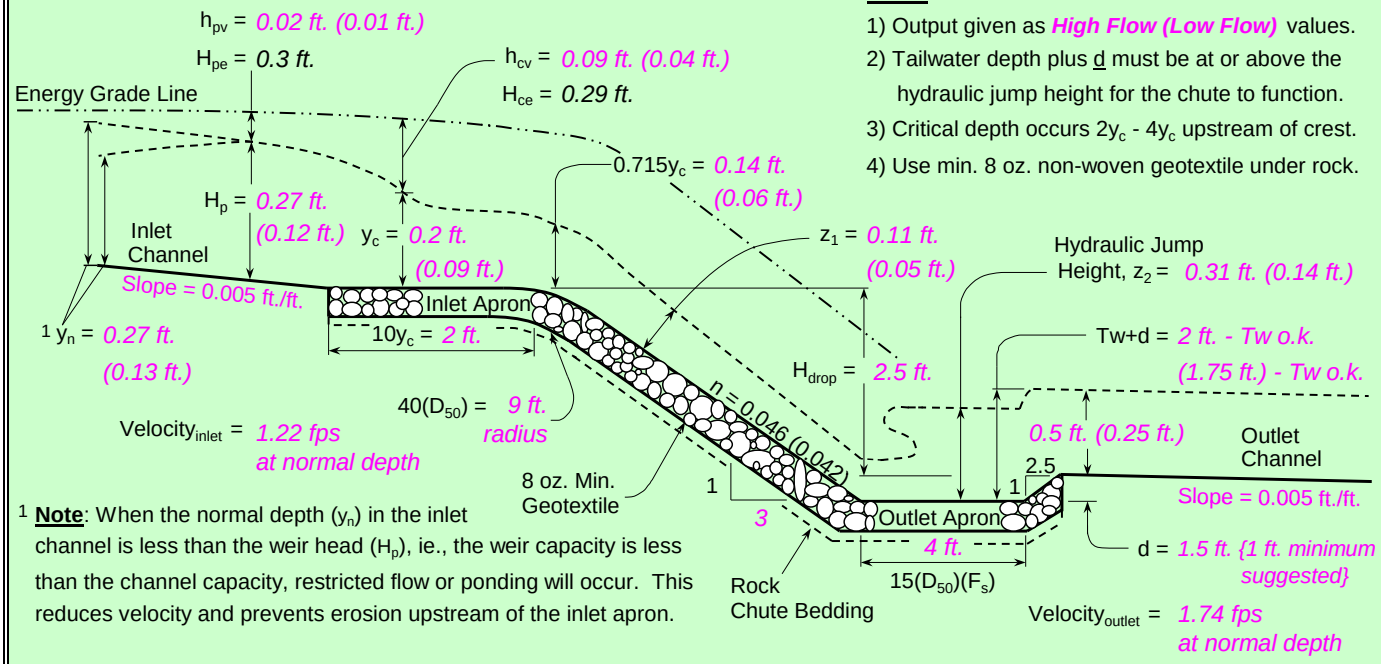

Notes:
1) Output given as ***High Flow (Low Flow)*** values.
2) Tailwater depth plus d must be at or above the hydraulic jump height for the chute to function.
3) Critical depth occurs 2y_c - 4y_c upstream of crest.
4) Use min. 8 oz. non-woven geotextile under rock.

[1] **Note**: When the normal depth (y_n) in the inlet channel is less than the weir head (H_p), ie., the weir capacity is less than the channel capacity, restricted flow or ponding will occur. This reduces velocity and prevents erosion upstream of the inlet apron.

Profile Along Centerline of Chute

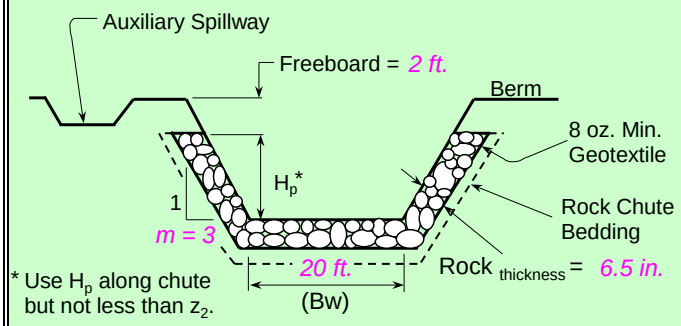

* Use H_p along chute but not less than z_2.

Typical Cross Section

q_t =	0.49 cfs/ft.	Equivalent unit discharge
F_S =	1.20	Factor of safety (multiplier)
z_1 =	0.11 ft.	Normal depth in chute
n-value =	0.046	Manning's roughness coefficient
D_{50}(F_s) =	3.3 in. (3 lbs. - 50% round / 50% angular)	
2(D_{50})(F_s) =	6.5 in.	Rock chute thickness
Tw + d =	2 ft.	Tailwater above outlet apron
z_2 =	0.31 ft.	Hydraulic jump height
*** The outlet	will	*function adequately*

High Flow Storm Information

Rock Chute Design - Plan Sheet

(Version 4.0 - 07/10/00, Based on Design of Rock Chutes by Robinson, Rice, Kadavy, ASAE, 1998)

Project: Forest Lakes Filing 6 - End of Road
Designer: Matt Larson
Date: 10/13/2020

County: EL Paso
Checked by:
Date:

Design Values

Angular D_{50} dia. =	*3.3*	in.
$Rock_{chute}$ thickness =	*6.5*	in.
Inlet apron length =	*2*	ft.
Outlet apron length =	*4*	ft.
Radius =	*9*	ft.
Will bedding be used?	*Yes*	----------

Rock Gradation Envelope

% Passing	*Diameter, in. (weight, lbs.)*
D_{100} ---------	5 - 7 (9 - 21)
D_{85} ---------	4 - 6 (6 - 15)
D_{50} ---------	3 - 5 (3 - 9)
D_{10} ---------	3 - 4 (1 - 6)

Depth (in.) = *6.0*

Quantities [a]

Angular Rock =	11	yd^3
Geotextile (8 oz.)[b] =	65	yd^2
Bedding (6 in.) =	12	yd^3
Excavation =	*700*	yd^3
Earthfill =	*500*	yd^3
Seeding =	*1.0*	acres

Notes: [a] *Rock, bedding, and geotextile quantities are determined from the x-section below (neglect radius).*
[b] *Geotextile shall be overlapped (18-in. min.) and anchored (18-in. min. along sides and 24-in. min. on the ends).*

Rock Chute Cost Estimate

Unit	*Unit Cost*	*Cost*
Rock	*$45.00* /$yd^3$	$495.00
Geotextile	*$3.00* /$yd^2$	$195.00
Bedding	*$8.00* /$yd^3$	$96.00
Excavation	*$1.25* /$yd^3$	$875.00
Earthfill	*$2.50* /$yd^3$	$1,250.00
Seeding	*$300.00* /ac.	$300.00
	Total	**$3,211.00**

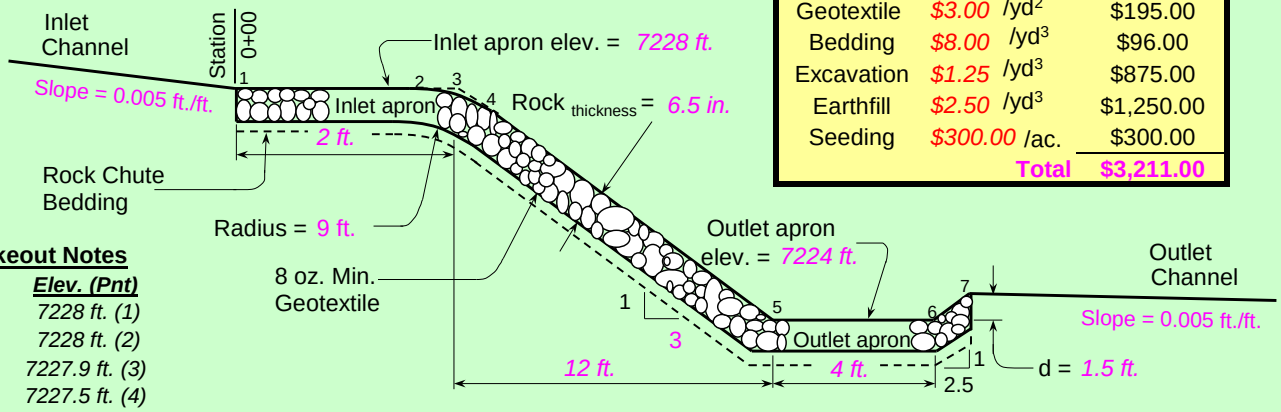

Stakeout Notes

Sta.	*Elev. (Pnt)*
0+00	*7228 ft. (1)*
0+0.5	*7228 ft. (2)*
0+2	*7227.9 ft. (3)*
0+3.4	*7227.5 ft. (4)*
0+14	*7224 ft. (5)*
0+18	*7224 ft. (6)*
0+21.8	*7225.5 ft. (7)*

Profile Along Centerline of Rock Chute

****Note**: *The outlet will function adequately*

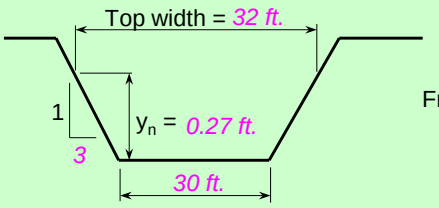

Inlet Channel Cross Section

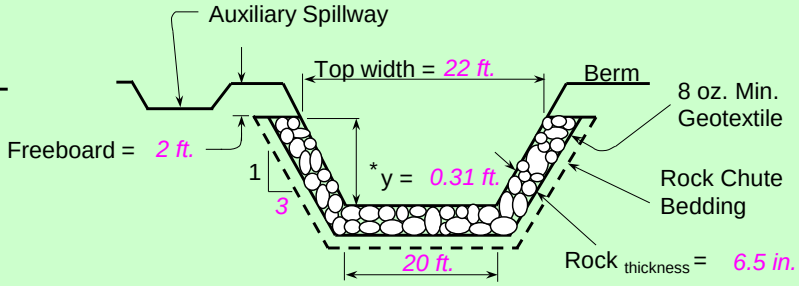

Rock Chute Cross Section

* Use H_p throughout chute but not less than z_2.

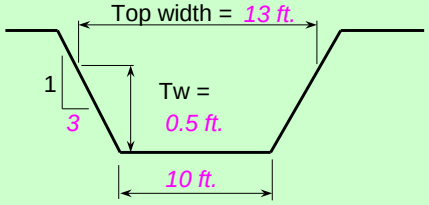

Outlet Channel Cross Section

Profile, Cross Sections, and Quantities

Project: Forest Lakes Filing 6 - End of Road
Location: EL Paso County

U.S. Department of Agriculture
Natural Resources Conservation Service

Designed: Matt Larson	Approved by:	
Drawn: NRCS Standard Dwg.	Title:	
Traced:	Title:	
Checked:	Sheet No.	Drawing No.
	of	

Worksheet for TankAccess-RockDitch

Project Description	
Friction Method	Manning Formula
Solve For	Normal Depth

Input Data		
Roughness Coefficient	0.040	
Channel Slope	0.110	ft/ft
Left Side Slope	3.000	H:V
Right Side Slope	3.000	H:V
Bottom Width	1.00	ft
Discharge	5.10	cfs

Results		
Normal Depth	5.2	in
Flow Area	1.0	ft²
Wetted Perimeter	3.7	ft
Hydraulic Radius	3.2	in
Top Width	3.60	ft
Critical Depth	6.8	in
Critical Slope	0.035	ft/ft
Velocity	5.11	ft/s
Velocity Head	0.41	ft
Specific Energy	0.84	ft
Froude Number	1.710	
Flow Type	Supercritical	

GVF Input Data		
Downstream Depth	0.0	in
Length	0.0	ft
Number Of Steps	0	

GVF Output Data		
Upstream Depth	0.0	in
Profile Description	N/A	
Profile Headloss	0.00	ft
Downstream Velocity	Infinity	ft/s
Upstream Velocity	Infinity	ft/s
Normal Depth	5.2	in
Critical Depth	6.8	in
Channel Slope	0.110	ft/ft
Critical Slope	0.035	ft/ft

DETENTION & STORMWATER

QUALITY POND 'B'

CLASSIC SM
CONSULTING
ENGINEERS & SURVEYORS

Worksheet Protected

Site-Level Low Impact Development (LID) Design Effective Impervious Calculator

LID Credit by Impervious Reduction Factor (IRF) Method

User Input

Calculated cells

***Design Storm: 1-Hour Rain Depth	WQCV Event	0.53	inches	
***Minor Storm: 1-Hour Rain Depth	10-Year Event	1.75	inches	
***Major Storm: 1-Hour Rain Depth	100-Year Event	2.52	inches	
Optional User Defined Storm	CUHP			
(CUHP) NOAA 1 Hour Rainfall Depth and Frequency for User Defined Storm	100-Year Event			
Max Intensity for Optional User Defined Storm	0			

Designer:	**Matt Larson**
Company:	**Classic Consulting Engineers & Surveyors, LLC**
Date:	**October 5, 2020**
Project:	**FOREST LAKES - FILING 6**
Location:	**POND B**

SITE INFORMATION (USER-INPUT)

Sub-basin Identifier	**TRIB BASIN**														
Receiving Pervious Area Soil Type	Sandy Loam														
Total Area (ac., Sum of DCIA, UIA, RPA, & SPA)	55.305														
Directly Connected Impervious Area (DCIA, acres)	7.501														
Unconnected Impervious Area (UIA, acres)	9.306														
Receiving Pervious Area (RPA, acres)	8.320														
Separate Pervious Area (SPA, acres)	30.178														
RPA Treatment Type: Conveyance (C), Volume (V), or Permeable Pavement (PP)	C														

CALCULATED RESULTS (OUTPUT)

Total Calculated Area (ac, check against input)	55.305														
Directly Connected Impervious Area (DCIA, %)	13.6%														
Unconnected Impervious Area (UIA, %)	16.8%														
Receiving Pervious Area (RPA, %)	15.0%														
Separate Pervious Area (SPA, %)	54.6%														
A_R (RPA / UIA)	0.894														
I_a Check	0.530														
f / I for WQCV Event:	2.0														
f / I for 10-Year Event:	0.5														
f / I for 100-Year Event:	0.3														
f / I for Optional User Defined Storm CUHP:															
IRF for WQCV Event:	0.63														
IRF for 10-Year Event:	0.90														
IRF for 100-Year Event:	0.94														
IRF for Optional User Defined Storm CUHP:															
Total Site Imperviousness: I_{total}	30.4%														
Effective Imperviousness for WQCV Event:	24.2%														
Effective Imperviousness for 10-Year Event:	28.7%														
Effective Imperviousness for 100-Year Event:	29.3%														
Effective Imperviousness for Optional User Defined Storm CUHP:															

LID / EFFECTIVE IMPERVIOUSNESS CREDITS

WQCV Event CREDIT: Reduce Detention By:	13.6%	N/A	N/A	N/A	N/A	N/A	N/A	N/A	N/A	N/A	N/A	N/A	N/A	N/A
10-Year Event CREDIT**: Reduce Detention By:	5.9%	N/A	N/A	N/A	N/A	N/A	N/A	N/A	N/A	N/A	N/A	N/A	N/A	N/A
100-Year Event CREDIT**: Reduce Detention By:	3.7%	N/A	N/A	N/A	N/A	N/A	N/A	N/A	N/A	N/A	N/A	N/A	N/A	N/A
User Defined CUHP CREDIT: Reduce Detention By:														

Total Site Imperviousness:	**30.4%**
Total Site Effective Imperviousness for WQCV Event:	**24.2%**
Total Site Effective Imperviousness for 10-Year Event:	**28.7%**
Total Site Effective Imperviousness for 100-Year Event:	**29.3%**
Total Site Effective Imperviousness for Optional User Defined Storm CUHP:	

Notes:

* Use Green-Ampt average infiltration rate values from Table 3-3.

** Flood control detention volume credits based on empirical equations from Storage Chapter of USDCM.

*** Method assumes that 1-hour rainfall depth is equivalent to 1-hour intensity for calculation purposed

Design Procedure Form: Extended Detention Basin (EDB)

Designer:	**Matt Larson**
Company:	**Classic Consulting Engineers & Surveyors, LLC**
Date:	**October 5, 2020**
Project:	**FOREST LAKES - FILING 6**
Location:	**POND B - FINAL DESIGN**

1. Basin Storage Volume	
A) Effective Imperviousness of Tributary Area, I_a	I_a = 30.4 %
B) Tributary Area's Imperviousness Ratio ($i = I_a / 100$)	i = 0.304
C) Contributing Watershed Area	Area = 55.305 ac
D) For Watersheds Outside of the Denver Region, Depth of Average Runoff Producing Storm	d_6 = 0.42 in
E) Design Concept (Select EURV when also designing for flood control)	Choose One: ○ Water Quality Capture Volume (WQCV) ◉ Excess Urban Runoff Volume (EURV)
F) Design Volume (WQCV) Based on 40-hour Drain Time ($V_{DESIGN} = (1.0 * (0.91 * i^3 - 1.19 * i^2 + 0.78 * i) / 12 * Area$)	V_{DESIGN}= 0.704 ac-ft
G) For Watersheds Outside of the Denver Region, Water Quality Capture Volume (WQCV) Design Volume ($V_{WQCV\ OTHER} = (d_6 * (V_{DESIGN}/0.43))$	$V_{DESIGN\ OTHER}$= 0.687 ac-ft
H) User Input of Water Quality Capture Volume (WQCV) Design Volume (Only if a different WQCV Design Volume is desired)	$V_{DESIGN\ USER}$= ac-ft
I) Predominant Watershed NRCS Soil Group	Choose One: ○ A ◉ B ○ C / D
J) Excess Urban Runoff Volume (EURV) Design Volume For HSG A: $EURV_A = 1.68 * i^{1.28}$ For HSG B: $EURV_B = 1.36 * i^{1.08}$ For HSG C/D: $EURV_{C/D} = 1.20 * i^{1.08}$	EURV = 1.732 ac-f t
2. Basin Shape: Length to Width Ratio (A basin length to width ratio of at least 2:1 will improve TSS reduction.)	L : W = 2.0 : 1
3. Basin Side Slopes	
A) Basin Maximum Side Slopes (Horizontal distance per unit vertical, 4:1 or flatter preferred)	Z = 4.00 ft / ft
4. Inlet	
A) Describe means of providing energy dissipation at concentrated inflow locations:	

Design Procedure Form: Extended Detention Basin (EDB)

Designer: Matt Larson
Company: Classic Consulting Engineers & Surveyors, LLC
Date: October 5, 2020
Project: FOREST LAKES - FILING 6
Location: POND B - FINAL DESIGN

5. Forebay	
A) Minimum Forebay Volume (V_{FMIN} = 3% of the WQCV)	V_{FMIN} = 0.021 ac-ft
B) Actual Forebay Volume	V_F = 0.025 ac-ft
C) Forebay Depth (D_F = 18 inch maximum)	D_F = 12.0 in
D) Forebay Discharge	
i) Undetained 100-year Peak Discharge	Q_{100} = 77.60 cfs
ii) Forebay Discharge Design Flow ($Q_F = 0.02 * Q_{100}$)	Q_F = 1.55 cfs
E) Forebay Discharge Design	Choose One: ○ Berm With Pipe ◉ Wall with Rect. Notch ○ Wall with V-Notch Weir (flow too small for berm w/ pipe)
F) Discharge Pipe Size (minimum 8-inches)	Calculated D_P = in
G) Rectangular Notch Width	Calculated W_N = 8.0 in
6. Trickle Channel	
A) Type of Trickle Channel	Choose One: ◉ Concrete ○ Soft Bottom
F) Slope of Trickle Channel	S = 0.0050 ft / ft
7. Micropool and Outlet Structure	
A) Depth of Micropool (2.5-feet minimum)	D_M = 2.5 ft
B) Surface Area of Micropool (10 ft^2 minimum)	A_M = 270 sq ft
C) Outlet Type	Choose One: ◉ Orifice Plate ○ Other (Describe):
D) Smallest Dimension of Orifice Opening Based on Hydrograph Routing (Use UD-Detention)	$D_{orifice}$ = 2.50 inches
E) Total Outlet Area	A_{ot} = 16.50 square inches

Design Procedure Form: Extended Detention Basin (EDB)

Designer: Matt Larson
Company: Classic Consulting Engineers & Surveyors, LLC
Date: October 5, 2020
Project: FOREST LAKES - FILING 6
Location: POND B - FINAL DESIGN

8. Initial Surcharge Volume	
A) Depth of Initial Surcharge Volume (Minimum recommended depth is 4 inches)	D_{IS} = 4 in
B) Minimum Initial Surcharge Volume (Minimum volume of 0.3% of the WQCV)	V_{IS} = 89.8 cu ft
C) Initial Surcharge Provided Above Micropool	V_s = 90.0 cu ft
9. Trash Rack	
A) Water Quality Screen Open Area: $A_t = A_{ot} * 38.5*(e^{-0.095D})$	A_t = 501 square inches
B) Type of Screen (If specifying an alternative to the materials recommended in the USDCM, indicate "other" and enter the ratio of the total open are to the total screen are for the material specified.)	*Aluminum Amico-Klemp SR Series with Cross Rods 2" O.C.*
Other (Y/N): N	
C) Ratio of Total Open Area to Total Area (only for type 'Other')	User Ratio =
D) Total Water Quality Screen Area (based on screen type)	A_{total} = 706 sq. in.
E) Depth of Design Volume (EURV or WQCV) (Based on design concept chosen under 1E)	H= 6 feet
F) Height of Water Quality Screen (H_{TR})	H_{TR}= 100 inches
G) Width of Water Quality Screen Opening ($W_{opening}$) (Minimum of 12 inches is recommended)	$W_{opening}$ = 12.0 inches

Design Procedure Form: Extended Detention Basin (EDB)

Designer: Matt Larson
Company: Classic Consulting Engineers & Surveyors, LLC
Date: October 5, 2020
Project: FOREST LAKES - FILING 6
Location: POND B - FINAL DESIGN

10. Overflow Embankment	
A) Describe embankment protection for 100-year and greater overtopping:	36' WIDE CONCRETE SPILLWAY AT ELEV. 7062.60
B) Slope of Overflow Embankment (Horizontal distance per unit vertical, 4:1 or flatter preferred)	4.00
11. Vegetation	Choose One: ○ Irrigated ◉ Not Irrigated
12. Access	
A) Describe Sediment Removal Procedures	15' WIDE ACCESS ROAD W/ MIN. 30' CL RADIUS TO POND BOTTOM

Notes:

DETENTION BASIN STAGE-STORAGE TABLE BUILDER

UD-Detention, Version 3.07 (February 2017)

Project: FOREST LAKE FILING 6

Basin ID: POND B

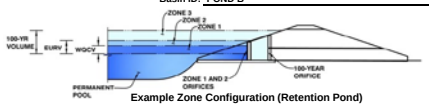

Example Zone Configuration (Retention Pond)

Required Volume Calculation

Selected BMP Type =	EDB		
Watershed Area =	55.31	acres	
Watershed Length =	2,697	ft	
Watershed Slope =	0.030	ft/ft	
Watershed Imperviousness =	30.40%	percent	
Percentage Hydrologic Soil Group A =	0.0%	percent	
Percentage Hydrologic Soil Group B =	100.0%	percent	
Percentage Hydrologic Soil Groups C/D =	0.0%	percent	
Desired WQCV Drain Time =	40.0	hours	
Location for 1-hr Rainfall Depths =	User Input		
Water Quality Capture Volume (WQCV) =	0.704	acre-feet	
Excess Urban Runoff Volume (EURV) =	1.727	acre-feet	
2-yr Runoff Volume (P1 = 1.19 in.) =	1.326	acre-feet	
5-yr Runoff Volume (P1 = 1.5 in.) =	1.885	acre-feet	
10-yr Runoff Volume (P1 = 1.75 in.) =	2.867	acre-feet	
25-yr Runoff Volume (P1 = 2 in.) =	4.773	acre-feet	
50-yr Runoff Volume (P1 = 2.25 in.) =	6.025	acre-feet	
100-yr Runoff Volume (P1 = 2.52 in.) =	7.663	acre-feet	
500-yr Runoff Volume (P1 = 3.1 in.) =	10.791	acre-feet	
Approximate 2-yr Detention Volume =	1.237	acre-feet	
Approximate 5-yr Detention Volume =	1.769	acre-feet	
Approximate 10-yr Detention Volume =	2.572	acre-feet	
Approximate 25-yr Detention Volume =	2.978	acre-feet	
Approximate 50-yr Detention Volume =	3.137	acre-feet	
Approximate 100-yr Detention Volume =	3.704	acre-feet	

Optional User Override 1-hr Precipitation

1.19	inches
1.50	inches
1.75	inches
2.00	inches
2.25	inches
2.52	inches
3.10	inches

Stage-Storage Calculation

Zone 1 Volume (WQCV) =	0.704	acre-feet
Zone 2 Volume (EURV - Zone 1) =	1.023	acre-feet
Zone 3 Volume (100-year - Zones 1 & 2) =	1.977	acre-feet
Total Detention Basin Volume =	3.704	acre-feet
Initial Surcharge Volume (ISV) =	user	ft^3
Initial Surcharge Depth (ISD) =	user	ft
Total Available Detention Depth (H_{total}) =	user	ft
Depth of Trickle Channel (H_{TC}) =	user	ft
Slope of Trickle Channel (S_{TC}) =	user	ft/ft
Slopes of Main Basin Sides (S_{main}) =	user	H:V
Basin Length-to-Width Ratio ($R_{L/W}$) =	user	
Initial Surcharge Area (A_{ISV}) =	user	ft^2
Surcharge Volume Length (L_{ISV}) =	user	ft
Surcharge Volume Width (W_{ISV}) =	user	ft
Depth of Basin Floor (H_{FLOOR}) =	user	ft
Length of Basin Floor (L_{FLOOR}) =	user	ft
Width of Basin Floor (W_{FLOOR}) =	user	ft
Area of Basin Floor (A_{FLOOR}) =	user	ft^2
Volume of Basin Floor (V_{FLOOR}) =	user	ft^3
Depth of Main Basin (H_{MAIN}) =	user	ft
Length of Main Basin (L_{MAIN}) =	user	ft
Width of Main Basin (W_{MAIN}) =	user	ft
Area of Main Basin (A_{MAIN}) =	user	ft^2
Volume of Main Basin (V_{MAIN}) =	user	ft^3
Calculated Total Basin Volume (V_{total}) =	user	acre-feet

Depth Increment = 0.25 ft

Stage - Storage Description	Stage (ft)	Optional Override Stage (ft)	Length (ft)	Width (ft)	Area (ft^2)	Optional Override Area (ft^2)	Area (acre)	Volume (ft^3)	Volume (ac-ft)
Top of Micropool	--	0.00	--	--	--	352	0.008		
	--	0.60	--	--	--	1,015	0.023	400	0.009
	--	1.60	--	--	--	9,445	0.217	5,546	0.127
	--	2.60	--	--	--	15,259	0.350	17,992	0.413
	--	4.60	--	--	--	19,557	0.449	52,808	1.212
	--	6.60	--	--	--	24,439	0.561	96,804	2.222
	--	8.60	--	--	--	30,153	0.692	151,396	3.476
	--	9.60	--	--	--	33,410	0.767	183,178	4.205
	--	10.60	--	--	--	36,666	0.842	218,216	5.010
	--	12.60	--	--	--	55,547	1.275	310,429	7.126
	--		--	--	--				
	--		--	--	--				
	--		--	--	--			

DETENTION BASIN STAGE-STORAGE TABLE BUILDER

UD-Detention, Version 3.07 (February 2017)

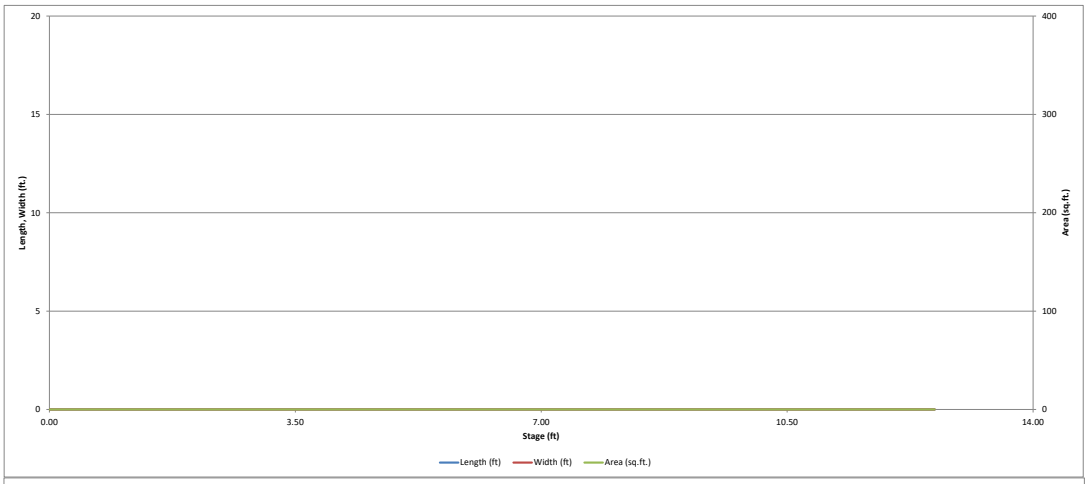

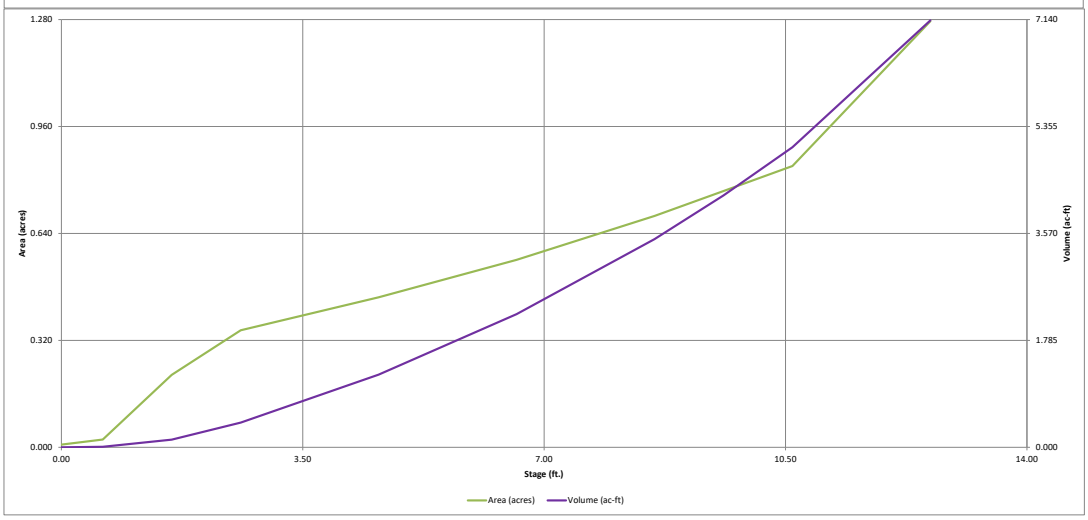

Detention Basin Outlet Structure Design

UD-Detention, Version 3.07 (February 2017)

Project:

Basin ID:

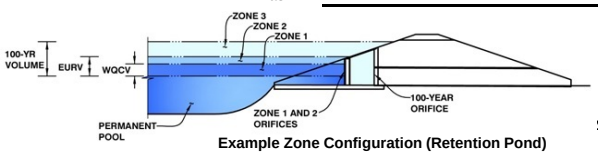

Example Zone Configuration (Retention Pond)

	Stage (ft)	Zone Volume (ac-ft)	Outlet Type
Zone 1 (WQCV)	3.39	0.704	Orifice Plate
Zone 2 (EURV)	5.68	1.023	Orifice Plate
Zone 3 (100-year)	8.93	1.977	Weir&Pipe (Circular)
		3.704	Total

User Input: Orifice at Underdrain Outlet (typically used to drain WQCV in a Filtration BMP)

Underdrain Orifice Invert Depth =	N/A	ft (distance below the filtration media surface)
Underdrain Orifice Diameter =	N/A	inches

Calculated Parameters for Underdrain

Underdrain Orifice Area =	N/A	ft^2
Underdrain Orifice Centroid =	N/A	feet

User Input: Orifice Plate with one or more orifices or Elliptical Slot Weir (typically used to drain WQCV and/or EURV in a sedimentation BMP)

Invert of Lowest Orifice =	0.00	ft (relative to basin bottom at Stage = 0 ft)
Depth at top of Zone using Orifice Plate =	6.00	ft (relative to basin bottom at Stage = 0 ft)
Orifice Plate: Orifice Vertical Spacing =	26.70	inches
Orifice Plate: Orifice Area per Row =	N/A	inches

Calculated Parameters for Plate

WQ Orifice Area per Row =	N/A	ft^2
Elliptical Half-Width =	N/A	feet
Elliptical Slot Centroid =	N/A	feet
Elliptical Slot Area =	N/A	ft^2

User Input: Stage and Total Area of Each Orifice Row (numbered from lowest to highest)

	Row 1 (required)	Row 2 (optional)	Row 3 (optional)	Row 4 (optional)	Row 5 (optional)	Row 6 (optional)	Row 7 (optional)	Row 8 (optional)
Stage of Orifice Centroid (ft)	0.00	2.00	4.00					
Orifice Area (sq. inches)	2.50	6.00	8.00					

	Row 9 (optional)	Row 10 (optional)	Row 11 (optional)	Row 12 (optional)	Row 13 (optional)	Row 14 (optional)	Row 15 (optional)	Row 16 (optional)
Stage of Orifice Centroid (ft)								
Orifice Area (sq. inches)								

User Input: Vertical Orifice (Circular or Rectangular)

	Not Selected	Not Selected	
Invert of Vertical Orifice =	N/A	N/A	ft (relative to basin bottom at Stage = 0 ft)
Depth at top of Zone using Vertical Orifice =	N/A	N/A	ft (relative to basin bottom at Stage = 0 ft)
Vertical Orifice Diameter =	N/A	N/A	inches

Calculated Parameters for Vertical Orifice

	Not Selected	Not Selected	
Vertical Orifice Area =	N/A	N/A	ft^2
Vertical Orifice Centroid =	N/A	N/A	feet

User Input: Overflow Weir (Dropbox) and Grate (Flat or Sloped)

	Zone 3 Weir	Not Selected	
Overflow Weir Front Edge Height, Ho =	6.00	N/A	ft (relative to basin bottom at Stage = 0 ft)
Overflow Weir Front Edge Length =	5.00	N/A	feet
Overflow Weir Slope =	4.00	N/A	H:V (enter zero for flat grate)
Horiz. Length of Weir Sides =	4.00	N/A	feet
Overflow Grate Open Area % =	70%	N/A	%, grate open area/total area
Debris Clogging % =	50%	N/A	%

Calculated Parameters for Overflow Weir

	Zone 3 Weir	Not Selected	
Height of Grate Upper Edge, H_t =	7.00	N/A	feet
Over Flow Weir Slope Length =	4.12	N/A	feet
Grate Open Area / 100-yr Orifice Area =	2.94	N/A	should be ≥ 4
Overflow Grate Open Area w/o Debris =	14.43	N/A	ft^2
Overflow Grate Open Area w/ Debris =	7.22	N/A	ft^2

User Input: Outlet Pipe w/ Flow Restriction Plate (Circular Orifice, Restrictor Plate, or Rectangular Orifice)

	Zone 3 Circular	Not Selected	
Depth to Invert of Outlet Pipe =	0.20	N/A	ft (distance below basin bottom at Stage = 0 ft)
Circular Orifice Diameter =	30.00	N/A	inches

Calculated Parameters for Outlet Pipe w/ Flow Restriction Plate

	Zone 3 Circular	Not Selected	
Outlet Orifice Area =	4.91	N/A	ft^2
Outlet Orifice Centroid =	1.25	N/A	feet
Half-Central Angle of Restrictor Plate on Pipe =	N/A	N/A	radians

User Input: Emergency Spillway (Rectangular or Trapezoidal)

Spillway Invert Stage=	9.20	ft (relative to basin bottom at Stage = 0 ft)
Spillway Crest Length =	36.00	feet
Spillway End Slopes =	4.00	H:V
Freeboard above Max Water Surface =	1.00	feet

Calculated Parameters for Spillway

Spillway Design Flow Depth=	0.95	feet
Stage at Top of Freeboard =	11.15	feet
Basin Area at Top of Freeboard =	0.96	acres

Routed Hydrograph Results

Design Storm Return Period =	WQCV	EURV	2 Year	5 Year	10 Year	25 Year	50 Year	100 Year	500 Year
One-Hour Rainfall Depth (in) =	0.53	1.07	1.19	1.50	1.75	2.00	2.25	2.52	3.10
Calculated Runoff Volume (acre-ft) =	0.704	1.727	1.326	1.885	2.867	4.773	6.025	7.663	10.791
OPTIONAL Override Runoff Volume (acre-ft) =									
Inflow Hydrograph Volume (acre-ft) =	0.703	1.726	1.324	1.883	2.864	4.769	6.017	7.654	10.775
Predevelopment Unit Peak Flow, q (cfs/acre) =	0.00	0.00	0.01	0.02	0.18	0.61	0.85	1.14	1.67
Predevelopment Peak Q (cfs) =	0.0	0.0	0.6	1.055	10.1	33.8	46.9	63.3	92.4
Peak Inflow Q (cfs) =	10.9	26.6	20.5	29.0	43.8	72.3	90.7	114.7	159.8
Peak Outflow Q (cfs) =	0.4	0.9	0.7	0.938	9.4	34.3	47.2	60.0	115.0
Ratio Peak Outflow to Predevelopment Q =	N/A	N/A	N/A	0.9	0.9	1.0	1.0	0.9	1.2
Structure Controlling Flow =	Plate	Plate	Plate	Plate	Overflow Grate 1	Overflow Grate 1	Overflow Grate 1	Overflow Grate 1	Spillway
Max Velocity through Grate 1 (fps) =	N/A	N/A	N/A	N/A	0.6	2.3	3.2	4.1	4.7
Max Velocity through Grate 2 (fps) =	N/A	N/A	N/A	N/A	N/A	N/A	N/A	N/A	N/A
Time to Drain 97% of Inflow Volume (hours) =	46	61	57	62	62	56	51	47	41
Time to Drain 99% of Inflow Volume (hours) =	48	66	61	68	70	67	66	64	60
Maximum Ponding Depth (ft) =	3.24	5.42	4.63	5.72	6.77	7.65	8.17	8.93	9.75
Area at Maximum Ponding Depth (acres) =	0.38	0.49	0.45	0.51	0.57	0.63	0.66	0.72	0.78
Maximum Volume Stored (acre-ft) =	0.647	1.599	1.226	1.750	2.313	2.848	3.177	3.701	4.313

Detention Basin Outlet Structure Design

UD-Detention, Version 3.07 (February 2017)

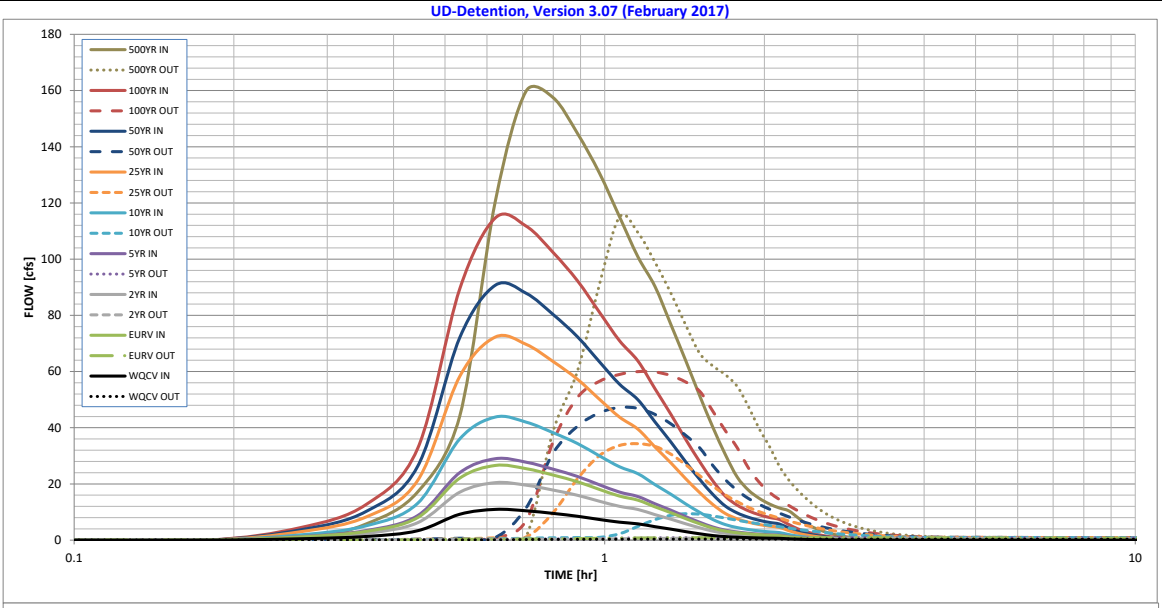

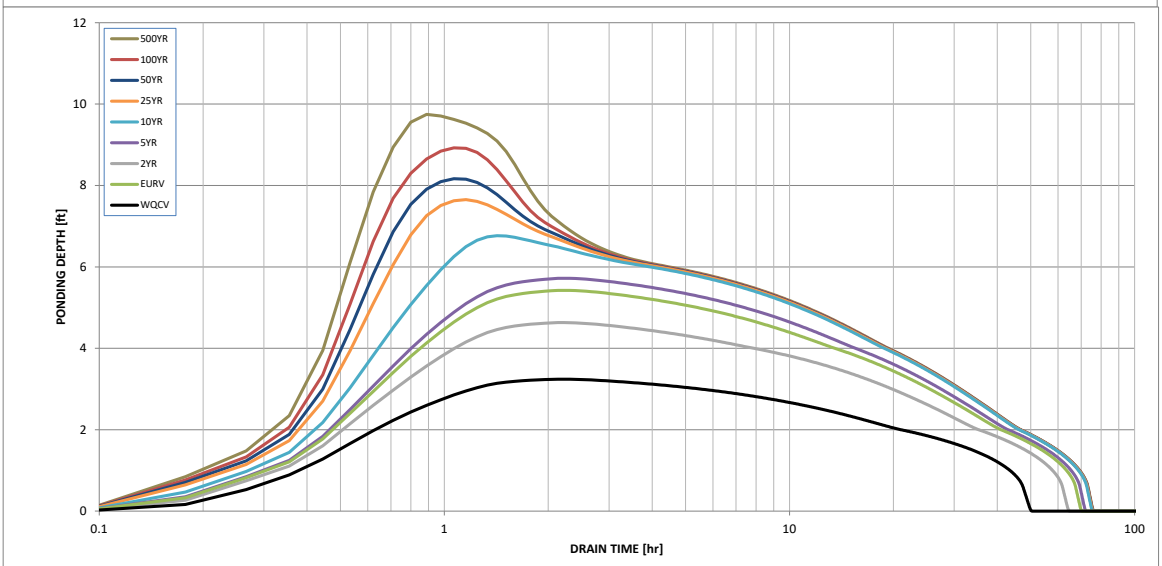

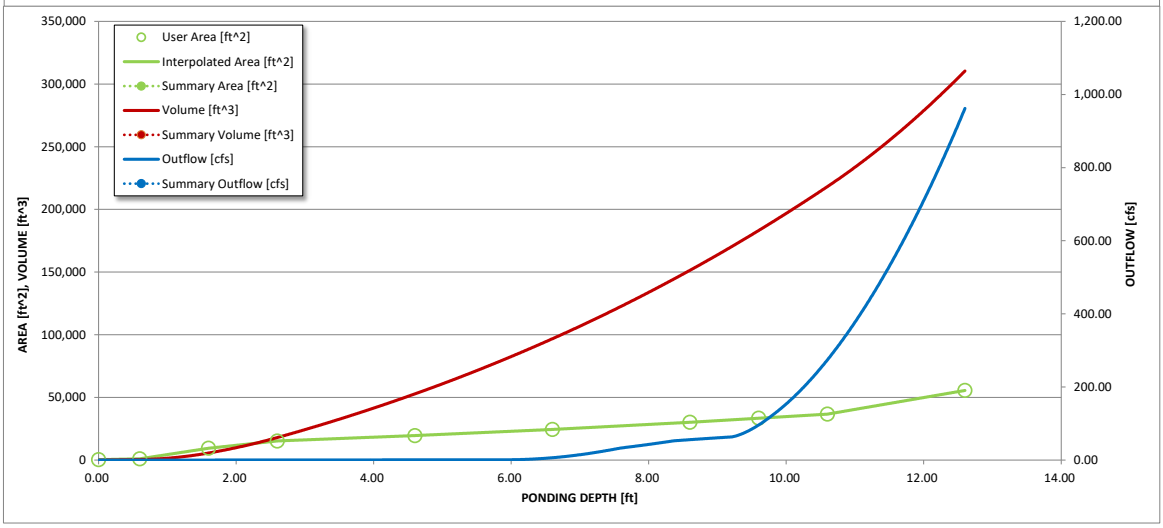

S-A-V-D Chart Axis Override	X-axis	Left Y-Axis	Right Y-Axis
minimum bound			
maximum bound			

Detention Basin Outlet Structure Design

Outflow Hydrograph Workbook Filename:

Storm Inflow Hydrographs **UD-Detention, Version 3.07 (February 2017)**

The user can override the calculated inflow hydrographs from this workbook with inflow hydrographs developed in a separate program.

Time Interval	SOURCE	WORKBOOK	WORKBOOK	WORKBOOK	WORKBOOK	WORKBOOK	WORKBOOK	WORKBOOK	WORKBOOK	WORKBOOK
	TIME	WQCV [cfs]	EURV [cfs]	2 Year [cfs]	5 Year [cfs]	10 Year [cfs]	25 Year [cfs]	50 Year [cfs]	100 Year [cfs]	500 Year [cfs]
5.33 min	0:00:00	0.00	0.00	0.00	0.00	0.00	0.00	0.00	0.00	0.00
	0:05:20	0.00	0.00	0.00	0.00	0.00	0.00	0.00	0.00	0.00
Hydrograph	0:10:40	0.00	0.00	0.00	0.00	0.00	0.00	0.00	0.00	0.00
Constant	0:15:59	0.48	1.15	0.89	1.25	1.86	2.96	3.62	4.42	5.78
0.937	0:21:19	1.30	3.13	2.42	3.41	5.11	8.28	10.25	12.72	17.17
	0:26:39	3.35	8.03	6.21	8.74	13.12	21.26	26.31	32.67	44.11
	0:31:59	9.20	22.06	17.05	24.01	36.00	58.27	72.07	89.41	120.51
	0:37:19	10.94	26.57	20.45	28.97	43.80	72.27	90.70	114.66	159.75
	0:42:38	10.44	25.44	19.56	27.74	42.00	69.69	87.88	111.77	157.47
	0:47:58	9.51	23.15	17.81	25.25	38.22	63.54	80.28	102.35	144.76
	0:53:18	8.49	20.77	15.96	22.66	34.38	57.26	72.37	92.31	130.66
	0:58:38	7.34	18.04	13.84	19.69	29.99	50.14	63.48	81.12	115.12
	1:03:58	6.39	15.67	12.03	17.10	26.12	43.80	55.51	70.99	100.84
	1:09:17	5.79	14.21	10.91	15.51	23.63	39.49	49.96	63.76	90.27
	1:14:37	4.78	11.84	9.06	12.93	19.75	33.15	42.06	53.88	76.73
	1:19:57	3.91	9.75	7.45	10.66	16.33	27.49	34.92	44.78	63.86
	1:25:17	3.01	7.63	5.80	8.35	12.87	21.83	27.83	35.82	51.36
	1:30:37	2.25	5.80	4.39	6.36	9.88	16.89	21.61	27.89	40.14
	1:35:56	1.63	4.25	3.20	4.67	7.32	12.65	16.24	21.05	30.44
	1:41:16	1.26	3.23	2.45	3.55	5.52	9.47	12.11	15.62	22.47
	1:46:36	1.04	2.64	2.00	2.89	4.47	7.59	9.68	12.44	17.79
	1:51:56	0.88	2.23	1.69	2.44	3.77	6.39	8.13	10.44	14.90
	1:57:16	0.77	1.95	1.48	2.13	3.28	5.55	7.06	9.04	12.87
	2:02:35	0.69	1.75	1.33	1.91	2.94	4.96	6.30	8.07	11.46
	2:07:55	0.64	1.61	1.22	1.76	2.70	4.54	5.76	7.37	10.45
	2:13:15	0.47	1.18	0.90	1.30	2.00	3.40	4.34	5.60	8.06
	2:18:35	0.34	0.86	0.66	0.94	1.45	2.46	3.14	4.04	5.81
	2:23:55	0.25	0.64	0.48	0.69	1.07	1.82	2.32	3.00	4.31
	2:29:14	0.19	0.47	0.36	0.51	0.80	1.35	1.73	2.23	3.20
	2:34:34	0.13	0.34	0.26	0.37	0.58	0.99	1.27	1.64	2.37
	2:39:54	0.09	0.24	0.18	0.27	0.41	0.71	0.92	1.19	1.71
	2:45:14	0.07	0.18	0.13	0.19	0.30	0.52	0.66	0.86	1.24
	2:50:34	0.04	0.12	0.09	0.13	0.21	0.36	0.47	0.61	0.88
	2:55:53	0.03	0.07	0.05	0.08	0.13	0.24	0.31	0.40	0.59
	3:01:13	0.01	0.04	0.03	0.04	0.07	0.14	0.18	0.24	0.35
	3:06:33	0.00	0.02	0.01	0.02	0.03	0.06	0.08	0.11	0.17
	3:11:53	0.00	0.00	0.00	0.00	0.01	0.02	0.03	0.04	0.06
	3:17:13	0.00	0.00	0.00	0.00	0.00	0.00	0.00	0.00	0.00
	3:22:32	0.00	0.00	0.00	0.00	0.00	0.00	0.00	0.00	0.00
	3:27:52	0.00	0.00	0.00	0.00	0.00	0.00	0.00	0.00	0.00
	3:33:12	0.00	0.00	0.00	0.00	0.00	0.00	0.00	0.00	0.00
	3:38:32	0.00	0.00	0.00	0.00	0.00	0.00	0.00	0.00	0.00
	3:43:52	0.00	0.00	0.00	0.00	0.00	0.00	0.00	0.00	0.00
	3:49:11	0.00	0.00	0.00	0.00	0.00	0.00	0.00	0.00	0.00
	3:54:31	0.00	0.00	0.00	0.00	0.00	0.00	0.00	0.00	0.00
	3:59:51	0.00	0.00	0.00	0.00	0.00	0.00	0.00	0.00	0.00
	4:05:11	0.00	0.00	0.00	0.00	0.00	0.00	0.00	0.00	0.00
	4:10:31	0.00	0.00	0.00	0.00	0.00	0.00	0.00	0.00	0.00
	4:15:50	0.00	0.00	0.00	0.00	0.00	0.00	0.00	0.00	0.00
	4:21:10	0.00	0.00	0.00	0.00	0.00	0.00	0.00	0.00	0.00
	4:26:30	0.00	0.00	0.00	0.00	0.00	0.00	0.00	0.00	0.00
	4:31:50	0.00	0.00	0.00	0.00	0.00	0.00	0.00	0.00	0.00
	4:37:10	0.00	0.00	0.00	0.00	0.00	0.00	0.00	0.00	0.00
	4:42:29	0.00	0.00	0.00	0.00	0.00	0.00	0.00	0.00	0.00
	4:47:49	0.00	0.00	0.00	0.00	0.00	0.00	0.00	0.00	0.00
	4:53:09	0.00	0.00	0.00	0.00	0.00	0.00	0.00	0.00	0.00
	4:58:29	0.00	0.00	0.00	0.00	0.00	0.00	0.00	0.00	0.00
	5:03:49	0.00	0.00	0.00	0.00	0.00	0.00	0.00	0.00	0.00
	5:09:08	0.00	0.00	0.00	0.00	0.00	0.00	0.00	0.00	0.00
	5:14:28	0.00	0.00	0.00	0.00	0.00	0.00	0.00	0.00	0.00
	5:19:48	0.00	0.00	0.00	0.00	0.00	0.00	0.00	0.00	0.00
	5:25:08	0.00	0.00	0.00	0.00	0.00	0.00	0.00	0.00	0.00
	5:30:28	0.00	0.00	0.00	0.00	0.00	0.00	0.00	0.00	0.00
	5:35:47	0.00	0.00	0.00	0.00	0.00	0.00	0.00	0.00	0.00
	5:41:07	0.00	0.00	0.00	0.00	0.00	0.00	0.00	0.00	0.00
	5:46:27	0.00	0.00	0.00	0.00	0.00	0.00	0.00	0.00	0.00
	5:51:47	0.00	0.00	0.00	0.00	0.00	0.00	0.00	0.00	0.00
	5:57:07	0.00	0.00	0.00	0.00	0.00	0.00	0.00	0.00	0.00
	6:02:26	0.00	0.00	0.00	0.00	0.00	0.00	0.00	0.00	0.00
	6:07:46	0.00	0.00	0.00	0.00	0.00	0.00	0.00	0.00	0.00
	6:13:06	0.00	0.00	0.00	0.00	0.00	0.00	0.00	0.00	0.00
	6:18:26	0.00	0.00	0.00	0.00	0.00	0.00	0.00	0.00	0.00
	6:23:46	0.00	0.00	0.00	0.00	0.00	0.00	0.00	0.00	0.00

Detention Basin Outlet Structure Design

UD-Detention, Version 3.07 (February 2017)

Summary Stage-Area-Volume-Discharge Relationships

The user can create a summary S-A-V-D by entering the desired stage increments and the remainder of the table will populate automatically.

The user should graphically compare the summary S-A-V-D table to the full S-A-V-D table in the chart to confirm it captures all key transition points.

Stage - Storage Description	Stage [ft]	Area [ft^2]	Area [acres]	Volume [ft^3]	Volume [ac-ft]	Total Outflow [cfs]

Password:

Convert Natural Catchment to a Rectangular Shape

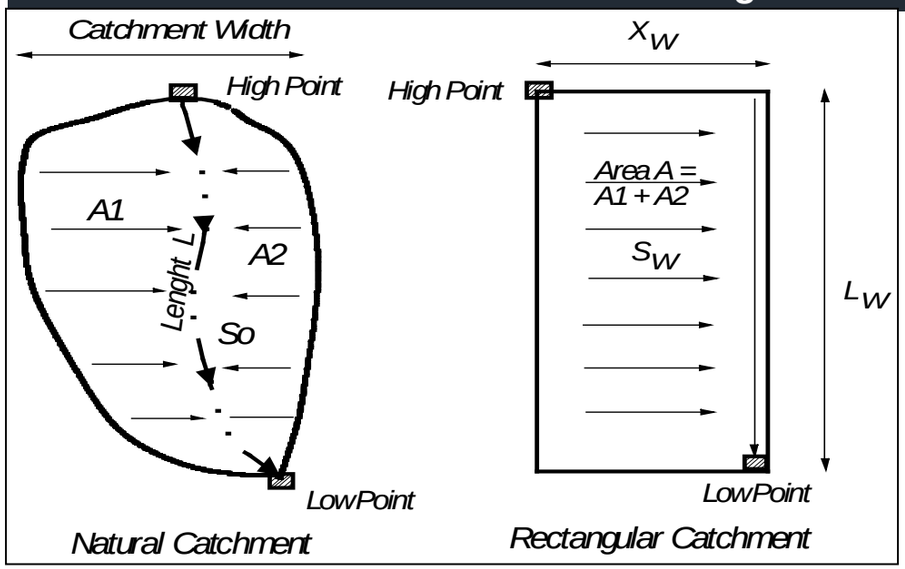

Subcatchment Center	Z=0.5
Side Collector	Z=1
Skewed Location	0.5<Z<1

Dimensionless Variables

$$Y = \frac{L}{L_w}; \qquad X = \frac{A}{L^2}$$

$$Y = (1.5 - Z)(2.286X - 0.286X^2)$$

$$\frac{Lw}{L} = (1.5 - Z)[2.286(\frac{A}{L^2}) - 0.286(\frac{A}{L^2})^2]$$

$$S_o/S_w = A/(LL_w) + L_w/L$$

$$X_w = A/L_w$$

Subarea ID	Area acre	A1 acre	A2 acre	L ft	High Pt Elev. ft	Low Pt Elev. ft	Z=Am/A	X=A/L²	Y=Lw/L	Lw ft	Xw ft	So %	So/Sw	Sw %
TO POND	55.33	31.59	23.74	1,700	7144.0	7066.0	0.57	0.83	1.59	2,697	894	4.59	2.11	2.17

JOB NAME: FOREST LAKES PHASE 2
JOB NUMBER: 1175.21
DATE: 10/05/20
CALCULATED BY: MAL

POND B - TOP OF BERM

POND SIZING WITH PONDPACK EQUATION:
INSERT POND DESIGN SIZE INFO: (RED)

POND ELEVATION : (from lowest to highest)	**AREA (BTM to TOP):**		
7053.40		-	acres
7053.40	270	0.01	acres
7054.00	800	0.02	acres
7055.00	9,722	0.22	acres
7056.00	15,058	0.35	acres
7058.00	19,398	0.45	acres
7060.00	24,363	0.56	acres
7062.00	30,153	0.69	acres
7064.00	36,666	0.84	acres
7066.00	55,547	1.28	acres
		-	acres
		-	acres

PRELIMINARY SIZE:

VOLUME = 1/3{(EL2-EL1)*(A1+A2+((A1*A2)^.5))}

						CUMMULATIVE VOLUME:
-	AC-FT	from	7,053	to	7,053	
0.01	AC-FT	from	7,053	to	7,054	0.01
0.10	AC-FT	from	7,054	to	7,055	0.11
0.28	AC-FT	from	7,055	to	7,056	0.39
0.78	AC-FT	from	7,056	to	7,058	1.17
0.99	AC-FT	from	7,058	to	7,060	2.16
1.24	AC-FT	from	7,060	to	7,062	3.40
1.52	AC-FT	from	7,062	to	7,064	4.91
2.08	AC-FT	from	7,064	to	7,066	6.99
-	AC-FT	from	7,066	to	-	6.99
-	AC-FT	from	-	to	-	6.99

*SIZING IS FOR PRELIMINARY PURPOSES ONLY.

VOLUME = 6.99 AC-FT

APPROXIMATE SURFACE AREA REQUIREMENT

POND DEPTH (FT)	**POND VOLUME** AC-FT		CF	**SURFACE AREA** (SF)
4	6.99	=	#######	76,170
6	6.99	=	#######	50,780
8	6.99	=	#######	38,085
10	6.99	=	#######	30,468

JOB NAME: FOREST LAKES PHASE 2
JOB NUMBER: 1175.21
DATE: 10/05/20
CALCULATED BY: MAL

POND B - SPILLWAY

POND SIZING WITH PONDPACK EQUATION:
INSERT POND DESIGN SIZE INFO: (RED)

POND ELEVATION : (from lowest to highest)	**AREA (BTM to TOP):**		
7053.40		-	acres
7053.40	270	0.01	acres
7054.00	800	0.02	acres
7055.00	9,722	0.22	acres
7056.00	15,058	0.35	acres
7058.00	19,398	0.45	acres
7060.00	24,363	0.56	acres
7062.00	30,153	0.69	acres
7062.60	33,410	0.77	acres
		-	acres
		-	acres
		-	acres

PRELIMINARY SIZE:

VOLUME = 1/3{(EL2-EL1)*(A1+A2+((A1*A2)^.5))}

						CUMMULATIVE VOLUME:
-	AC-FT	from	7,053	to	7,053	
0.01	AC-FT	from	7,053	to	7,054	0.01
0.10	AC-FT	from	7,054	to	7,055	0.11
0.28	AC-FT	from	7,055	to	7,056	0.39
0.78	AC-FT	from	7,056	to	7,058	1.17
0.99	AC-FT	from	7,058	to	7,060	2.16
1.24	AC-FT	from	7,060	to	7,062	3.40
0.43	AC-FT	from	7,062	to	7,063	3.83
-	AC-FT	from	7,063	to	-	3.83
-	AC-FT	from	-	to	-	3.83
-	AC-FT	from	-	to	-	3.83

*SIZING IS FOR PRELIMINARY PURPOSES ONLY.

VOLUME = 3.83 AC-FT

APPROXIMATE SURFACE AREA REQUIREMENT

POND DEPTH (FT)	**POND VOLUME** AC-FT		CF	**SURFACE AREA** (SF)
4	3.83	=	#######	41,714
6	3.83	=	#######	27,809
8	3.83	=	#######	20,857
10	3.83	=	#######	16,686

JOB NAME: FOREST LAKES PHASE 2
JOB NUMBER: 1175.21
DATE: 10/05/20
CALCULATED BY: MAL

POND B EURV

POND SIZING WITH PONDPACK EQUATION:
INSERT POND DESIGN SIZE INFO: (RED)

POND ELEVATION : (from lowest to highest)	**AREA (BTM to TOP):**		
7053.40		-	acres
7053.40	270	0.01	acres
7054.00	800	0.02	acres
7055.00	9,722	0.22	acres
7056.00	15,058	0.35	acres
7058.00	19,398	0.45	acres
7059.40	22,550	0.52	acres
		-	acres
		-	acres
		-	acres
		-	acres
		-	acres

PRELIMINARY SIZE:

VOLUME = 1/3{(EL2-EL1)*(A1+A2+((A1*A2)^.5))}

						CUMMULATIVE VOLUME:
-	AC-FT	from	7,053	to	7,053	
0.01	AC-FT	from	7,053	to	7,054	0.01
0.10	AC-FT	from	7,054	to	7,055	0.11
0.28	AC-FT	from	7,055	to	7,056	0.39
0.78	AC-FT	from	7,056	to	7,058	1.17
0.67	AC-FT	from	7,058	to	7,059	1.83
-	AC-FT	from	7,059	to	-	1.83
-	AC-FT	from	-	to	-	1.83
-	AC-FT	from	-	to	-	1.83
-	AC-FT	from	-	to	-	1.83
-	AC-FT	from	-	to	-	1.83

*SIZING IS FOR PRELIMINARY PURPOSES ONLY.

VOLUME = 1.83 AC-FT

APPROXIMATE SURFACE AREA REQUIREMENT

POND DEPTH (FT)	**POND VOLUME** AC-FT		CF	**SURFACE AREA** (SF)
4	1.83	=	79,930	19,983
6	1.83	=	79,930	13,322
8	1.83	=	79,930	9,991
10	1.83	=	79,930	7,993

Design Procedure Form: Extended Detention Basin (EDB)

Designer:	**Matt Larson**
Company:	**Classic Consulting Engineers & Surveyors, LLC**
Date:	**October 6, 2020**
Project:	**FOREST LAKES - FILING 6**
Location:	**FOREBAY - PIPE 14**

1. Basin Storage Volume	
A) Effective Imperviousness of Tributary Area, I_a	I_a = 30.4 %
B) Tributary Area's Imperviousness Ratio ($i = I_a / 100$)	i = 0.304
C) Contributing Watershed Area	Area = 22.410 ac
D) For Watersheds Outside of the Denver Region, Depth of Average Runoff Producing Storm	d_6 = 0.42 in
E) Design Concept (Select EURV when also designing for flood control)	Choose One: ○ Water Quality Capture Volume (WQCV) ◉ Excess Urban Runoff Volume (EURV)
F) Design Volume (WQCV) Based on 40-hour Drain Time ($V_{DESIGN} = (1.0 * (0.91 * i^3 - 1.19 * i^2 + 0.78 * i) / 12 * Area$)	V_{DESIGN}= 0.285 ac-ft
G) For Watersheds Outside of the Denver Region, Water Quality Capture Volume (WQCV) Design Volume ($V_{WQCV\ OTHER} = (d_6 * (V_{DESIGN}/0.43))$	$V_{DESIGN\ OTHER}$= 0.279 ac-ft
H) User Input of Water Quality Capture Volume (WQCV) Design Volume (Only if a different WQCV Design Volume is desired)	$V_{DESIGN\ USER}$= ac-ft
I) Predominant Watershed NRCS Soil Group	Choose One: ○ A ◉ B ○ C / D
J) Excess Urban Runoff Volume (EURV) Design Volume For HSG A: $EURV_A = 1.68 * i^{1.28}$ For HSG B: $EURV_B = 1.36 * i^{1.08}$ For HSG C/D: $EURV_{C/D} = 1.20 * i^{1.08}$	EURV = 0.702 ac-f t
2. Basin Shape: Length to Width Ratio (A basin length to width ratio of at least 2:1 will improve TSS reduction.)	L : W = 2.0 : 1
3. Basin Side Slopes	
A) Basin Maximum Side Slopes (Horizontal distance per unit vertical, 4:1 or flatter preferred)	Z = 4.00 ft / ft
4. Inlet	
A) Describe means of providing energy dissipation at concentrated inflow locations:	

Design Procedure Form: Extended Detention Basin (EDB)

Designer: Matt Larson
Company: Classic Consulting Engineers & Surveyors, LLC
Date: October 6, 2020
Project: FOREST LAKES - FILING 6
Location: FOREBAY - PIPE 14

5. Forebay	
A) Minimum Forebay Volume (V_{FMIN} = 3% of the WQCV)	V_{FMIN} = 0.008 ac-ft
B) Actual Forebay Volume	V_F = 0.010 ac-ft
C) Forebay Depth (D_F = 18 inch maximum)	D_F = 12.0 in
D) Forebay Discharge	
i) Undetained 100-year Peak Discharge	Q_{100} = 77.60 cfs
ii) Forebay Discharge Design Flow ($Q_F = 0.02 * Q_{100}$)	Q_F = 1.55 cfs
E) Forebay Discharge Design	Choose One: ○ Berm With Pipe ◉ Wall with Rect. Notch ○ Wall with V-Notch Weir (flow too small for berm w/ pipe)
F) Discharge Pipe Size (minimum 8-inches)	Calculated D_P = in
G) Rectangular Notch Width	Calculated W_N = 8.0 in
6. Trickle Channel	
A) Type of Trickle Channel	Choose One: ◉ Concrete ○ Soft Bottom
F) Slope of Trickle Channel	S = 0.0050 ft / ft
7. Micropool and Outlet Structure	
A) Depth of Micropool (2.5-feet minimum)	D_M = 2.5 ft
B) Surface Area of Micropool (10 ft^2 minimum)	A_M = 270 sq ft
C) Outlet Type	Choose One: ◉ Orifice Plate ○ Other (Describe):
D) Smallest Dimension of Orifice Opening Based on Hydrograph Routing (Use UD-Detention)	$D_{orifice}$ = 2.50 inches
E) Total Outlet Area	A_{ot} = 16.50 square inches

Design Procedure Form: Extended Detention Basin (EDB)

Designer:	**Matt Larson**
Company:	**Classic Consulting Engineers & Surveyors, LLC**
Date:	**October 6, 2020**
Project:	**FOREST LAKES - FILING 6**
Location:	**FOREBAY - PIPE 30**

1. Basin Storage Volume	
A) Effective Imperviousness of Tributary Area, I_a	I_a = 30.4 %
B) Tributary Area's Imperviousness Ratio ($i = I_a / 100$)	i = 0.304
C) Contributing Watershed Area	Area = 31.170 ac
D) For Watersheds Outside of the Denver Region, Depth of Average Runoff Producing Storm	d_6 = 0.42 in
E) Design Concept (Select EURV when also designing for flood control)	Choose One: ○ Water Quality Capture Volume (WQCV) ◉ Excess Urban Runoff Volume (EURV)
F) Design Volume (WQCV) Based on 40-hour Drain Time ($V_{DESIGN} = (1.0 * (0.91 * i^3 - 1.19 * i^2 + 0.78 * i) / 12 * Area$)	V_{DESIGN}= 0.397 ac-ft
G) For Watersheds Outside of the Denver Region, Water Quality Capture Volume (WQCV) Design Volume ($V_{WQCV\ OTHER} = (d_6 * (V_{DESIGN}/0.43))$	$V_{DESIGN\ OTHER}$= 0.387 ac-ft
H) User Input of Water Quality Capture Volume (WQCV) Design Volume (Only if a different WQCV Design Volume is desired)	$V_{DESIGN\ USER}$= ac-ft
I) Predominant Watershed NRCS Soil Group	Choose One: ○ A ◉ B ○ C / D
J) Excess Urban Runoff Volume (EURV) Design Volume For HSG A: $EURV_A = 1.68 * i^{1.28}$ For HSG B: $EURV_B = 1.36 * i^{1.08}$ For HSG C/D: $EURV_{C/D} = 1.20 * i^{1.08}$	EURV = 0.976 ac-f t
2. Basin Shape: Length to Width Ratio (A basin length to width ratio of at least 2:1 will improve TSS reduction.)	L : W = 2.0 : 1
3. Basin Side Slopes	
A) Basin Maximum Side Slopes (Horizontal distance per unit vertical, 4:1 or flatter preferred)	Z = 4.00 ft / ft
4. Inlet	
A) Describe means of providing energy dissipation at concentrated inflow locations:	

Design Procedure Form: Extended Detention Basin (EDB)

Designer: Matt Larson
Company: Classic Consulting Engineers & Surveyors, LLC
Date: October 6, 2020
Project: FOREST LAKES - FILING 6
Location: FOREBAY - PIPE 30

5. Forebay	
A) Minimum Forebay Volume (V_{FMIN} = 3% of the WQCV)	V_{FMIN} = 0.012 ac-ft
B) Actual Forebay Volume	V_F = 0.015 ac-ft
C) Forebay Depth (D_F = 18 inch maximum)	D_F = 12.0 in
D) Forebay Discharge	
i) Undetained 100-year Peak Discharge	Q_{100} = 102.20 cfs
ii) Forebay Discharge Design Flow ($Q_F = 0.02 * Q_{100}$)	Q_F = 2.04 cfs
E) Forebay Discharge Design	Choose One: ○ Berm With Pipe ◉ Wall with Rect. Notch ○ Wall with V-Notch Weir (flow too small for berm w/ pipe)
F) Discharge Pipe Size (minimum 8-inches)	Calculated D_P = in
G) Rectangular Notch Width	Calculated W_N = 9.8 in
6. Trickle Channel	
A) Type of Trickle Channel	Choose One: ◉ Concrete ○ Soft Bottom
F) Slope of Trickle Channel	S = 0.0050 ft / ft
7. Micropool and Outlet Structure	
A) Depth of Micropool (2.5-feet minimum)	D_M = 2.5 ft
B) Surface Area of Micropool (10 ft^2 minimum)	A_M = 270 sq ft
C) Outlet Type	Choose One: ◉ Orifice Plate ○ Other (Describe):
D) Smallest Dimension of Orifice Opening Based on Hydrograph Routing (Use UD-Detention)	$D_{orifice}$ = 2.50 inches
E) Total Outlet Area	A_{ot} = 16.50 square inches

Figure 13-12c. Emergency Spillway Protection

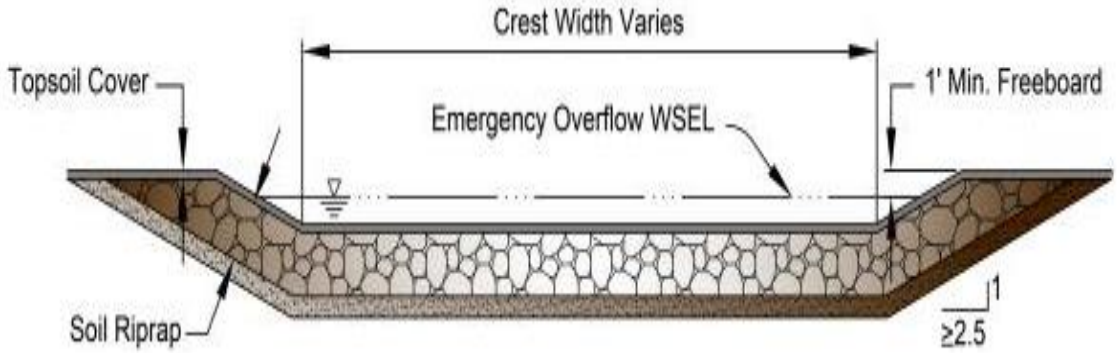

Figure 13-12d. Riprap Types for Emergency Spillway Protection

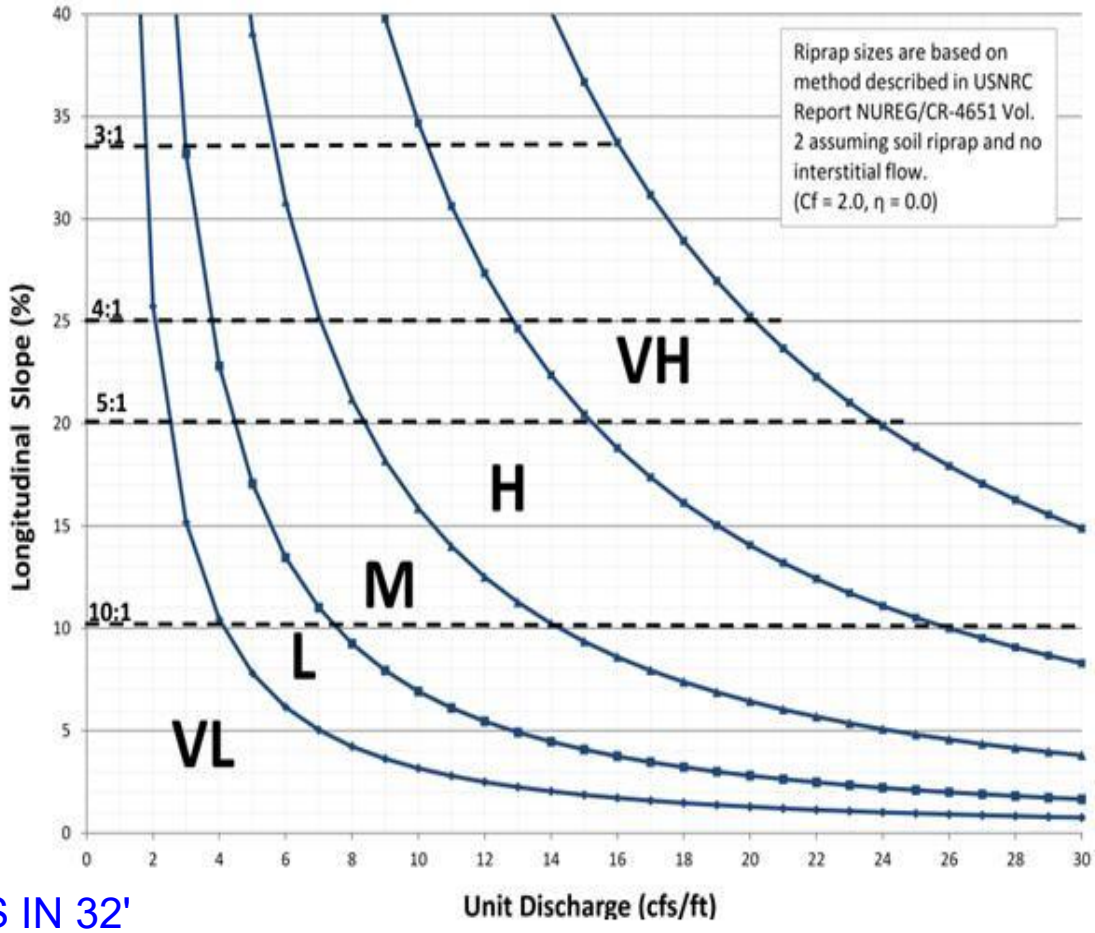

183.5 CFS IN 32'
LENGTH = 5.73
TYPE H ROCK

HYDRAULIC GRADE LINE (HGL)

CALCULATIONS

CLASSIC SM
CONSULTING
ENGINEERS & SURVEYORS

System Input Summary

SYSTEM FROM THE NORTH 100-YR HGL

Rainfall Parameters

Rainfall Return Period: 100
Rainfall Calculation Method: Formula

One Hour Depth (in):
Rainfall Constant "A": 28.5
Rainfall Constant "B": 10
Rainfall Constant "C": 0.786

Rational Method Constraints

Minimum Urban Runoff Coeff.: 0.20
Maximum Rural Overland Len. (ft): 500
Maximum Urban Overland Len. (ft): 300
Used UDFCD Tc. Maximum: Yes

Sizer Constraints

Minimum Sewer Size (in): 18.00
Maximum Depth to Rise Ratio: 0.90
Maximum Flow Velocity (fps): 18.0
Minimum Flow Velocity (fps): 2.0

Backwater Calculations:

Tailwater Elevation (ft): 0.00

Manhole Input Summary:

		Given Flow		Sub Basin Information						
Element Name	**Ground Elevation (ft)**	**Total Known Flow (cfs)**	**Local Contribution (cfs)**	**Drainage Area (Ac.)**	**Runoff Coefficient**	**5yr Coefficient**	**Overland Length (ft)**	**Overland Slope (%)**	**Gutter Length (ft)**	**Gutter Velocity (fps)**
OUTFALL 1	7054.84	0.00	0.00	0.00	0.00	0.00	0.00	0.00	0.00	0.00
PIPE 30-1	7066.02	102.20	0.00	0.00	0.00	0.00	0.00	0.00	0.00	0.00
PIPE 30-2	7067.98	102.20	0.00	0.00	0.00	0.00	0.00	0.00	0.00	0.00
PIPE 30-3	7069.66	102.20	0.00	0.00	0.00	0.00	0.00	0.00	0.00	0.00
PIPE 30-4	7069.63	102.20	0.00	0.00	0.00	0.00	0.00	0.00	0.00	0.00
PIPE 30-5	7068.96	102.20	0.00	0.00	0.00	0.00	0.00	0.00	0.00	0.00
PIPE 27-1	7070.23	98.70	0.00	0.00	0.00	0.00	0.00	0.00	0.00	0.00
PIPE 27-2	7069.32	98.70	0.00	0.00	0.00	0.00	0.00	0.00	0.00	0.00
PIPE 26	7069.38	18.50	0.00	0.00	0.00	0.00	0.00	0.00	0.00	0.00
PIPE 24	7071.19	76.20	0.00	0.00	0.00	0.00	0.00	0.00	0.00	0.00
PIPE 22	7072.15	63.90	0.00	0.00	0.00	0.00	0.00	0.00	0.00	0.00
PIPE 20	7071.84	12.50	0.00	0.00	0.00	0.00	0.00	0.00	0.00	0.00
PIPE 21	7072.20	14.70	0.00	0.00	0.00	0.00	0.00	0.00	0.00	0.00
PIPE 19-1	7086.22	38.10	0.00	0.00	0.00	0.00	0.00	0.00	0.00	0.00
PIPE 19-2	7096.06	38.10	0.00	0.00	0.00	0.00	0.00	0.00	0.00	0.00
PIPE 19-3	7091.58	38.10	0.00	0.00	0.00	0.00	0.00	0.00	0.00	0.00
PIPE 19-4	7112.39	38.10	0.00	0.00	0.00	0.00	0.00	0.00	0.00	0.00
PIPE 17	7143.93	23.80	0.00	0.00	0.00	0.00	0.00	0.00	0.00	0.00

PIPE 16	7044.10	7.90	0.00	0.00	0.00	0.00	0.00	0.00	0.00	0.00
PIPE 15	7044.10	16.40	0.00	0.00	0.00	0.00	0.00	0.00	0.00	0.00
PIPE 18	7113.49	14.70	0.00	0.00	0.00	0.00	0.00	0.00	0.00	0.00
PIPE 23	7071.73	13.00	0.00	0.00	0.00	0.00	0.00	0.00	0.00	0.00
PIPE 25	7069.38	7.10	0.00	0.00	0.00	0.00	0.00	0.00	0.00	0.00
PIPE 28	7069.03	2.80	0.00	0.00	0.00	0.00	0.00	0.00	0.00	0.00
PIPE 29	7069.03	3.40	0.00	0.00	0.00	0.00	0.00	0.00	0.00	0.00

Manhole Output Summary:

	Local Contribution					Total Design Flow				
Element Name	**Overland Time (min)**	**Gutter Time (min)**	**Basin Tc (min)**	**Intensity (in/hr)**	**Local Contrib (cfs)**	**Coeff. Area**	**Intensity (in/hr)**	**Manhole Tc (min)**	**Peak Flow (cfs)**	**Comment**
OUTFALL 1	0.00	0.00	0.00	0.00	0.00	0.00	0.00	0.00	0.00	
PIPE 30-1	0.00	0.00	0.00	0.00	0.00	0.00	0.00	0.00	102.20	Surface Water Present (Downstream)
PIPE 30-2	0.00	0.00	0.00	0.00	0.00	0.00	0.00	0.00	102.20	
PIPE 30-3	0.00	0.00	0.00	0.00	0.00	0.00	0.00	0.00	102.20	
PIPE 30-4	0.00	0.00	0.00	0.00	0.00	0.00	0.00	0.00	102.20	
PIPE 30-5	0.00	0.00	0.00	0.00	0.00	0.00	0.00	0.00	102.20	
PIPE 27-1	0.00	0.00	0.00	0.00	0.00	0.00	0.00	0.00	98.70	
PIPE 27-2	0.00	0.00	0.00	0.00	0.00	0.00	0.00	0.00	98.70	
PIPE 26	0.00	0.00	0.00	0.00	0.00	0.00	0.00	0.00	18.50	

PIPE 24	0.00	0.00	0.00	0.00	0.00	0.00	0.00	0.00	76.20	
PIPE 22	0.00	0.00	0.00	0.00	0.00	0.00	0.00	0.00	63.90	
PIPE 20	0.00	0.00	0.00	0.00	0.00	0.00	0.00	0.00	12.50	
PIPE 21	0.00	0.00	0.00	0.00	0.00	0.00	0.00	0.00	14.70	
PIPE 19-1	0.00	0.00	0.00	0.00	0.00	0.00	0.00	0.00	38.10	
PIPE 19-2	0.00	0.00	0.00	0.00	0.00	0.00	0.00	0.00	38.10	
PIPE 19-3	0.00	0.00	0.00	0.00	0.00	0.00	0.00	0.00	38.10	Surface Water Present (Upstream)
PIPE 19-4	0.00	0.00	0.00	0.00	0.00	0.00	0.00	0.00	38.10	Surface Water Present (Downstream)
PIPE 17	0.00	0.00	0.00	0.00	0.00	0.00	0.00	0.00	23.80	
PIPE 16	0.00	0.00	0.00	0.00	0.00	0.00	0.00	0.00	7.90	Surface Water Present (Upstream)
PIPE 15	0.00	0.00	0.00	0.00	0.00	0.00	0.00	0.00	16.40	Surface Water Present (Upstream)
PIPE 18	0.00	0.00	0.00	0.00	0.00	0.00	0.00	0.00	14.70	
PIPE 23	0.00	0.00	0.00	0.00	0.00	0.00	0.00	0.00	13.00	
PIPE 25	0.00	0.00	0.00	0.00	0.00	0.00	0.00	0.00	7.10	
PIPE 28	0.00	0.00	0.00	0.00	0.00	0.00	0.00	0.00	2.80	
PIPE 29	0.00	0.00	0.00	0.00	0.00	0.00	0.00	0.00	3.40	

Sewer Input Summary:

	Elevation	Loss Coefficients	Given Dimensions

Element Name	Sewer Length (ft)	Downstream Invert (ft)	Slope (%)	Upstream Invert (ft)	Mannings n	Bend Loss	Lateral Loss	Cross Section	Rise (ft or in)	Span (ft or in)
PIPE 30-1	70.67	7054.85	1.9	7056.19	0.013	0.03	1.00	CIRCULAR	48.00 in	48.00 in
PIPE 30-2	56.38	7056.19	0.5	7056.47	0.013	0.10	0.72	CIRCULAR	48.00 in	48.00 in
PIPE 30-3	123.17	7056.47	0.5	7057.09	0.013	0.33	0.47	CIRCULAR	48.00 in	48.00 in
PIPE 30-4	24.00	7057.09	0.5	7057.21	0.013	0.38	0.44	CIRCULAR	48.00 in	48.00 in
PIPE 30-5	89.57	7057.21	0.5	7057.66	0.013	0.38	0.44	CIRCULAR	48.00 in	48.00 in
PIPE 27-1	134.91	7057.86	0.5	7058.53	0.013	0.05	1.00	CIRCULAR	48.00 in	48.00 in
PIPE 27-2	87.08	7058.53	0.5	7058.97	0.013	0.05	0.92	CIRCULAR	48.00 in	48.00 in
PIPE 26	38.31	7060.97	8.0	7064.03	0.013	1.32	0.00	CIRCULAR	24.00 in	24.00 in
PIPE 24	147.02	7059.46	0.5	7060.20	0.013	0.08	0.77	CIRCULAR	42.00 in	42.00 in
PIPE 22	64.83	7060.40	0.5	7060.72	0.013	1.14	0.25	CIRCULAR	42.00 in	42.00 in
PIPE 20	27.73	7062.22	1.0	7062.50	0.013	1.32	0.00	CIRCULAR	24.00 in	24.00 in
PIPE 21	2.71	7062.22	8.1	7062.44	0.013	1.32	0.00	CIRCULAR	24.00 in	24.00 in
PIPE 19-1	284.44	7061.72	4.0	7073.10	0.013	0.05	1.00	CIRCULAR	30.00 in	30.00 in
PIPE 19-2	103.06	7073.30	10.5	7084.12	0.013	0.05	1.00	CIRCULAR	30.00 in	30.00 in
PIPE 19-3	56.70	7084.13	10.5	7090.08	0.013	0.08	0.77	CIRCULAR	30.00 in	30.00 in
PIPE 19-4	108.66	7090.08	10.5	7101.49	0.013	0.07	0.78	CIRCULAR	30.00 in	30.00 in
PIPE 17	378.33	7101.99	9.6	7138.31	0.013	0.05	1.00	CIRCULAR	24.00 in	24.00 in
PIPE 16	28.28	7038.80	3.0	7039.65	0.013	1.14	0.00	CIRCULAR	18.00 in	18.00 in
PIPE 15	5.71	7038.51	7.9	7038.96	0.013	0.38	0.44	CIRCULAR	24.00 in	24.00 in
PIPE 18	3.67	7101.99	9.8	7102.35	0.013	1.32	0.00	CIRCULAR	24.00 in	24.00 in
PIPE 23	43.49	7062.22	10.0	7066.57	0.013	0.24	0.00	CIRCULAR	18.00 in	18.00 in
PIPE 25	13.03	7061.47	10.0	7062.77	0.013	1.32	0.00	CIRCULAR	18.00 in	18.00 in

PIPE 28	38.44	7060.16	10.0	7064.00	0.013	1.32	0.00	CIRCULAR	18.00 in	18.00 in
PIPE 29	12.90	7060.16	10.0	7061.45	0.013	1.32	0.00	CIRCULAR	18.00 in	18.00 in

Sewer Flow Summary:

	Full Flow Capacity		Critical Flow		Normal Flow						
Element Name	**Flow (cfs)**	**Velocity (fps)**	**Depth (in)**	**Velocity (fps)**	**Depth (in)**	**Velocity (fps)**	**Froude Number**	**Flow Condition**	**Flow (cfs)**	**Surcharged Length (ft)**	**Comment**
PIPE 30-1	198.53	15.80	36.74	9.90	24.42	15.91	2.21	Supercritical	102.20	0.00	
PIPE 30-2	101.84	8.10	48.00	8.13	48.00	8.13	0.00	Pressurized	102.20	56.38	
PIPE 30-3	101.84	8.10	48.00	8.13	48.00	8.13	0.00	Pressurized	102.20	123.17	
PIPE 30-4	101.84	8.10	48.00	8.13	48.00	8.13	0.00	Pressurized	102.20	24.00	
PIPE 30-5	101.84	8.10	48.00	8.13	48.00	8.13	0.00	Pressurized	102.20	89.57	
PIPE 27-1	101.84	8.10	36.13	9.73	38.07	9.23	0.90	Pressurized	98.70	134.91	
PIPE 27-2	101.84	8.10	36.13	9.73	38.07	9.23	0.90	Pressurized	98.70	87.08	
PIPE 26	64.16	20.42	18.58	7.09	8.82	17.66	4.22	Pressurized	18.50	38.31	
PIPE 24	71.33	7.41	42.00	7.92	42.00	7.92	0.00	Pressurized	76.20	147.02	
PIPE 22	71.33	7.41	30.07	8.67	31.03	8.39	0.94	Pressurized	63.90	64.83	
PIPE 20	22.68	7.22	15.25	5.94	12.72	7.40	1.42	Pressurized	12.50	27.73	
PIPE 21	64.56	20.55	16.58	6.35	7.79	16.64	4.27	Pressurized	14.70	2.71	
PIPE 19-1	82.26	16.76	25.03	8.71	14.35	16.44	3.01	Supercritical Jump	38.10	156.39	
PIPE 19-2	133.27	27.15	25.03	8.71	10.98	23.42	5.02	Supercritical	38.10	0.00	Velocity is Too High
PIPE 19-3	133.27	27.15	25.03	8.71	10.98	23.42	5.02	Supercritical	38.10	0.00	Velocity is Too High

PIPE 19-4	133.27	27.15	25.03	8.71	10.98	23.42	5.02	Supercritical Jump	38.10	3.26	Velocity is Too High
PIPE 17	70.28	22.37	20.75	8.24	9.63	20.21	4.60	Supercritical	23.80	0.00	Velocity is Too High
PIPE 16	18.24	10.32	13.07	5.75	8.28	9.95	2.41	Pressurized	7.90	28.28	
PIPE 15	63.76	20.29	17.52	6.67	8.30	17.00	4.21	Pressurized	16.40	5.71	
PIPE 18	71.01	22.60	16.58	6.35	7.41	17.82	4.70	Pressurized	14.70	3.67	
PIPE 23	33.31	18.85	16.21	7.76	7.81	17.68	4.43	Supercritical Jump	13.00	42.12	
PIPE 25	33.31	18.85	12.38	5.48	5.64	14.98	4.53	Pressurized	7.10	13.03	
PIPE 28	33.31	18.85	7.62	3.93	3.53	11.45	4.46	Pressurized	2.80	38.44	
PIPE 29	33.31	18.85	8.44	4.18	3.88	12.12	4.48	Pressurized	3.40	12.90	

- A Froude number of 0 indicates that pressured flow occurs (adverse slope or undersized pipe).
- If the sewer is not pressurized, full flow represents the maximum gravity flow in the sewer.
- If the sewer is pressurized, full flow represents the pressurized flow conditions.

Sewer Sizing Summary:

			Existing		Calculated		Used			
Element Name	**Peak Flow (cfs)**	**Cross Section**	**Rise**	**Span**	**Rise**	**Span**	**Rise**	**Span**	**Area (ft^2)**	**Comment**
PIPE 30-1	102.20	CIRCULAR	48.00 in	48.00 in	42.00 in	42.00 in	48.00 in	48.00 in	12.57	
PIPE 30-2	102.20	CIRCULAR	48.00 in	48.00 in	54.00 in	54.00 in	48.00 in	48.00 in	12.57	Existing height is smaller than the suggested height. Existing width is smaller

										than the suggested width. Exceeds max. Depth/Rise
PIPE 30-3	102.20	CIRCULAR	48.00 in	48.00 in	54.00 in	54.00 in	48.00 in	48.00 in	12.57	Existing height is smaller than the suggested height. Existing width is smaller than the suggested width. Exceeds max. Depth/Rise
PIPE 30-4	102.20	CIRCULAR	48.00 in	48.00 in	54.00 in	54.00 in	48.00 in	48.00 in	12.57	Existing height is smaller than the suggested height. Existing width is smaller than the suggested width. Exceeds max. Depth/Rise
PIPE 30-5	102.20	CIRCULAR	48.00 in	48.00 in	54.00 in	54.00 in	48.00 in	48.00 in	12.57	Existing height is smaller than the suggested height. Existing width is smaller than the suggested width. Exceeds max. Depth/Rise
PIPE 27-1	98.70	CIRCULAR	48.00 in	48.00 in	48.00 in	48.00 in	48.00 in	48.00 in	12.57	
PIPE 27-2	98.70	CIRCULAR	48.00 in	48.00 in	48.00 in	48.00 in	48.00 in	48.00 in	12.57	
PIPE 26	18.50	CIRCULAR	24.00 in	24.00 in	18.00 in	18.00 in	24.00 in	24.00 in	3.14	
PIPE 24	76.20	CIRCULAR	42.00 in	42.00 in	48.00 in	48.00 in	42.00 in	42.00 in	9.62	Existing height is smaller than the suggested height. Existing width is smaller than the suggested width. Exceeds max. Depth/Rise
PIPE 22	63.90	CIRCULAR	42.00 in	42.00 in	42.00 in	42.00 in	42.00 in	42.00 in	9.62	
PIPE 20	12.50	CIRCULAR	24.00 in	24.00 in	21.00 in	21.00 in	24.00 in	24.00 in	3.14	
PIPE 21	14.70	CIRCULAR	24.00 in	24.00 in	18.00 in	18.00 in	24.00 in	24.00 in	3.14	
PIPE 19-1	38.10	CIRCULAR	30.00 in	30.00 in	24.00 in	24.00 in	30.00 in	30.00 in	4.91	

PIPE 19-2	38.10	CIRCULAR	30.00 in	30.00 in	21.00 in	21.00 in	30.00 in	30.00 in	4.91	
PIPE 19-3	38.10	CIRCULAR	30.00 in	30.00 in	21.00 in	21.00 in	30.00 in	30.00 in	4.91	
PIPE 19-4	38.10	CIRCULAR	30.00 in	30.00 in	21.00 in	21.00 in	30.00 in	30.00 in	4.91	
PIPE 17	23.80	CIRCULAR	24.00 in	24.00 in	18.00 in	18.00 in	24.00 in	24.00 in	3.14	
PIPE 16	7.90	CIRCULAR	18.00 in	18.00 in	18.00 in	18.00 in	18.00 in	18.00 in	1.77	
PIPE 15	16.40	CIRCULAR	24.00 in	24.00 in	18.00 in	18.00 in	24.00 in	24.00 in	3.14	
PIPE 18	14.70	CIRCULAR	24.00 in	24.00 in	18.00 in	18.00 in	24.00 in	24.00 in	3.14	
PIPE 23	13.00	CIRCULAR	18.00 in	18.00 in	18.00 in	18.00 in	18.00 in	18.00 in	1.77	
PIPE 25	7.10	CIRCULAR	18.00 in	18.00 in	18.00 in	18.00 in	18.00 in	18.00 in	1.77	
PIPE 28	2.80	CIRCULAR	18.00 in	18.00 in	18.00 in	18.00 in	18.00 in	18.00 in	1.77	
PIPE 29	3.40	CIRCULAR	18.00 in	18.00 in	18.00 in	18.00 in	18.00 in	18.00 in	1.77	

- Calculated diameter was determined by sewer hydraulic capacity rounded up to the nearest commercially available size.
- Sewer sizes should not decrease downstream.
- All hydraulics where calculated using the 'Used' parameters.

Grade Line Summary:

Tailwater Elevation (ft): 0.00

	Invert Elev.		Downstream Manhole Losses		HGL		EGL		
Element Name	**Downstream (ft)**	**Upstream (ft)**	**Bend Loss (ft)**	**Lateral Loss (ft)**	**Downstream (ft)**	**Upstream (ft)**	**Downstream (ft)**	**Friction Loss (ft)**	**Upstream (ft)**

PIPE 30-1	7054.85	7056.19	0.00	0.00	7056.88	7059.51	7060.81	0.00	7060.81
PIPE 30-2	7056.19	7056.47	0.10	0.29	7060.19	7060.47	7061.22	0.28	7061.50
PIPE 30-3	7056.47	7057.09	0.34	0.54	7061.36	7061.98	7062.38	0.62	7063.00
PIPE 30-4	7057.09	7057.21	0.39	0.58	7062.94	7063.06	7063.97	0.12	7064.09
PIPE 30-5	7057.21	7057.66	0.39	0.58	7064.03	7064.48	7065.05	0.45	7065.51
PIPE 27-1	7057.86	7058.53	0.05	0.07	7064.66	7065.30	7065.62	0.63	7066.26
PIPE 27-2	7058.53	7058.97	0.05	0.08	7065.42	7065.83	7066.38	0.41	7066.79
PIPE 26	7060.97	7064.03	0.71	0.00	7066.96	7067.22	7067.50	0.25	7067.75
PIPE 24	7059.46	7060.20	0.08	0.21	7066.12	7066.96	7067.09	0.84	7067.93
PIPE 22	7060.40	7060.72	0.78	0.80	7068.83	7069.09	7069.51	0.26	7069.77
PIPE 20	7062.22	7062.50	0.32	0.00	7069.85	7069.94	7070.10	0.08	7070.18
PIPE 21	7062.22	7062.44	0.45	0.00	7069.88	7069.89	7070.22	0.01	7070.23
PIPE 19-1	7061.72	7073.10	0.05	0.00	7069.14	7075.19	7070.07	6.29	7076.36
PIPE 19-2	7073.30	7084.12	0.05	0.00	7075.23	7086.21	7082.73	4.65	7087.38
PIPE 19-3	7084.13	7090.08	0.07	0.22	7086.50	7092.62	7093.56	0.00	7093.56
PIPE 19-4	7090.08	7101.49	0.07	0.21	7092.89	7103.58	7093.83	10.92	7104.75
PIPE 17	7101.99	7138.31	0.04	0.04	7103.66	7140.04	7109.13	31.96	7141.09
PIPE 16	7038.80	7039.65	0.35	0.00	7141.14	7141.30	7141.45	0.16	7141.61
PIPE 15	7038.51	7038.96	0.16	0.70	7141.54	7141.57	7141.96	0.03	7141.99
PIPE 18	7101.99	7102.35	0.45	0.00	7104.86	7104.88	7105.20	0.02	7105.22
PIPE 23	7062.22	7066.57	0.20	0.00	7067.29	7067.92	7068.13	0.72	7068.86
PIPE 25	7061.47	7062.77	0.33	0.00	7066.87	7066.93	7067.12	0.06	7067.18
PIPE 28	7060.16	7064.00	0.05	0.00	7065.52	7065.54	7065.56	0.03	7065.58
PIPE 29	7060.16	7061.45	0.08	0.00	7065.52	7065.54	7065.58	0.01	7065.59

- Bend and Lateral losses only apply when there is an outgoing sewer. The system outfall, sewer #0, is not considered a sewer.
- Bend loss = Bend K * V_fi ^ 2/(2*g)
- Lateral loss = V_fo ^ 2/(2*g)- Junction Loss K * V_fi ^ 2/(2*g).
- Friction loss is always Upstream EGL - Downstream EGL.

Excavation Estimate:

The trench side slope is 1.0 ft/ft
The minimum trench width is 2.00 ft

					Downstream			Upstream				
Element Name	**Length (ft)**	**Wall (in)**	**Bedding (in)**	**Bottom Width (ft)**	**Top Width (ft)**	**Trench Depth (ft)**	**Cover (ft)**	**Top Width (ft)**	**Trench Depth (ft)**	**Cover (ft)**	**Volume (cu. yd)**	**Comment**
PIPE 30-1	70.67	5.00	6.00	7.83	0.00	0.91	0.00	16.66	10.75	5.41	144.98	Sewer Too Shallow
PIPE 30-2	56.38	5.00	6.00	7.83	16.66	10.75	5.42	20.02	12.43	7.09	248.66	
PIPE 30-3	123.17	5.00	6.00	7.83	20.01	12.42	7.09	22.14	13.49	8.15	664.21	
PIPE 30-4	24.00	5.00	6.00	7.83	22.14	13.49	8.15	21.84	13.34	8.00	137.93	
PIPE 30-5	89.57	5.00	6.00	7.83	21.84	13.33	8.00	19.60	12.22	6.88	470.71	
PIPE 27-1	134.91	5.00	6.00	7.83	19.21	12.02	6.69	20.40	12.62	7.28	661.63	
PIPE 27-2	87.08	5.00	6.00	7.83	20.39	12.61	7.28	17.70	11.27	5.93	404.45	
PIPE 26	38.31	3.00	4.00	5.50	15.71	8.94	6.10	9.70	5.93	3.10	79.64	
PIPE 24	147.02	4.50	6.00	7.25	17.21	10.73	5.98	19.48	11.87	7.12	615.33	
PIPE 22	64.83	4.50	6.00	7.25	19.09	11.67	6.92	20.36	12.31	7.56	302.32	

PIPE 20	27.73	3.00	4.00	5.50	18.85	10.51	7.68	17.68	9.92	7.09	99.65	
PIPE 21	2.71	3.00	4.00	5.50	18.86	10.51	7.68	18.52	10.34	7.51	10.12	
PIPE 19-1	284.44	3.50	6.00	6.08	19.36	11.22	7.64	24.74	13.91	10.33	1495.59	
PIPE 19-2	103.06	3.50	6.00	6.08	24.34	13.71	10.13	22.38	12.73	9.15	592.82	
PIPE 19-3	56.70	3.50	6.00	6.08	22.37	12.73	9.14	6.08	2.29	0.00	165.52	Sewer Too Shallow
PIPE 19-4	108.66	3.50	6.00	6.08	0.00	2.29	0.00	20.30	11.69	8.11	272.84	Sewer Too Shallow
PIPE 17	378.33	3.00	4.00	5.50	19.80	10.98	8.15	10.24	6.20	3.37	1059.74	
PIPE 16	28.28	2.50	4.00	4.92	209.76	105.67	103.42	8.40	4.99	2.74	5780.11	
PIPE 15	5.71	3.00	4.00	5.50	209.84	106.00	103.17	9.28	5.72	2.89	1169.18	
PIPE 18	3.67	3.00	4.00	5.50	19.80	10.98	8.15	21.28	11.72	8.89	16.19	
PIPE 23	43.49	2.50	4.00	4.92	17.44	9.51	7.26	9.82	5.70	3.45	96.64	
PIPE 25	13.03	2.50	4.00	4.92	15.21	8.39	6.14	12.72	7.15	4.90	28.50	
PIPE 28	38.44	2.50	4.00	4.92	17.11	9.35	7.10	9.56	5.57	3.32	82.50	
PIPE 29	12.90	2.50	4.00	4.92	17.10	9.34	7.09	14.66	8.12	5.87	35.05	

Total earth volume for sewer trenches = 14634 cubic yards.

- The trench was estimated to have a bottom width equal to the outer pipe diameter plus 36 inches.
- If the calculated width of the trench bottom is less than the minimum acceptable width, the minimum acceptable width was used.
- The sewer wall thickness is equal to: (equivalent diameter in inches/12)+1 inches
- The sewer bedding thickness is equal to:
    - Four inches for pipes less than 33 inches.
    - Six inches for pipes less than 60 inches.
    - Eight inches for all larger sizes.

System Input Summary

SYSTEM FROM WEST – 100-YR HGL

Rainfall Parameters

Rainfall Return Period: 100
Rainfall Calculation Method: Formula

One Hour Depth (in):
Rainfall Constant "A": 28.5
Rainfall Constant "B": 10
Rainfall Constant "C": 0.786

Rational Method Constraints

Minimum Urban Runoff Coeff.: 0.20
Maximum Rural Overland Len. (ft): 500
Maximum Urban Overland Len. (ft): 300
Used UDFCD Tc. Maximum: Yes

Sizer Constraints

Minimum Sewer Size (in): 18.00
Maximum Depth to Rise Ratio: 0.90
Maximum Flow Velocity (fps): 18.0
Minimum Flow Velocity (fps): 2.0

Backwater Calculations:

Tailwater Elevation (ft): 0.00

Manhole Input Summary:

		Given Flow		Sub Basin Information						
Element Name	**Ground Elevation (ft)**	**Total Known Flow (cfs)**	**Local Contribution (cfs)**	**Drainage Area (Ac.)**	**Runoff Coefficient**	**5yr Coefficient**	**Overland Length (ft)**	**Overland Slope (%)**	**Gutter Length (ft)**	**Gutter Velocity (fps)**
OUTFALL 1	7055.59	0.00	0.00	0.00	0.00	0.00	0.00	0.00	0.00	0.00
PIPE 14	7065.75	77.60	0.00	0.00	0.00	0.00	0.00	0.00	0.00	0.00
PIPE 13	7065.45	13.80	0.00	0.00	0.00	0.00	0.00	0.00	0.00	0.00
PIPE 12-1	7067.54	65.70	0.00	0.00	0.00	0.00	0.00	0.00	0.00	0.00
PIPE 12-2	7068.68	65.70	0.00	0.00	0.00	0.00	0.00	0.00	0.00	0.00
PIPE 10	7069.02	6.90	0.00	0.00	0.00	0.00	0.00	0.00	0.00	0.00
PIPE 11	7069.02	5.40	0.00	0.00	0.00	0.00	0.00	0.00	0.00	0.00
PIPE 9-1	7071.38	56.90	0.00	0.00	0.00	0.00	0.00	0.00	0.00	0.00
PIPE 9-2	7072.25	56.90	0.00	0.00	0.00	0.00	0.00	0.00	0.00	0.00
PIPE 9-3	7073.01	56.90	0.00	0.00	0.00	0.00	0.00	0.00	0.00	0.00
PIPE 9-4	7073.79	56.90	0.00	0.00	0.00	0.00	0.00	0.00	0.00	0.00
PIPE 9-5	7074.61	56.90	0.00	0.00	0.00	0.00	0.00	0.00	0.00	0.00
PIPE 9-6	7075.26	56.90	0.00	0.00	0.00	0.00	0.00	0.00	0.00	0.00
PIPE 9-7	7076.61	56.90	0.00	0.00	0.00	0.00	0.00	0.00	0.00	0.00
PIPE 9-8	7076.04	56.90	0.00	0.00	0.00	0.00	0.00	0.00	0.00	0.00
PIPE 7	7076.34	18.90	0.00	0.00	0.00	0.00	0.00	0.00	0.00	0.00
PIPE 6B-1	7076.27	32.70	0.00	0.00	0.00	0.00	0.00	0.00	0.00	0.00
PIPE 6B-2	7076.88	32.70	0.00	0.00	0.00	0.00	0.00	0.00	0.00	0.00

PIPE 8	7076.34	8.30	0.00	0.00	0.00	0.00	0.00	0.00	0.00	0.00

Manhole Output Summary:

	Local Contribution					Total Design Flow				
Element Name	**Overland Time (min)**	**Gutter Time (min)**	**Basin Tc (min)**	**Intensity (in/hr)**	**Local Contrib (cfs)**	**Coeff. Area**	**Intensity (in/hr)**	**Manhole Tc (min)**	**Peak Flow (cfs)**	**Comment**
OUTFALL 1	0.00	0.00	0.00	0.00	0.00	0.00	0.00	0.00	0.00	
PIPE 14	0.00	0.00	0.00	0.00	0.00	0.00	0.00	0.00	77.60	Surface Water Present (Downstream)
PIPE 13	0.00	0.00	0.00	0.00	0.00	0.00	0.00	0.00	13.80	
PIPE 12-1	0.00	0.00	0.00	0.00	0.00	0.00	0.00	0.00	65.70	
PIPE 12-2	0.00	0.00	0.00	0.00	0.00	0.00	0.00	0.00	65.70	
PIPE 10	0.00	0.00	0.00	0.00	0.00	0.00	0.00	0.00	6.90	
PIPE 11	0.00	0.00	0.00	0.00	0.00	0.00	0.00	0.00	5.40	
PIPE 9-1	0.00	0.00	0.00	0.00	0.00	0.00	0.00	0.00	56.90	
PIPE 9-2	0.00	0.00	0.00	0.00	0.00	0.00	0.00	0.00	56.90	
PIPE 9-3	0.00	0.00	0.00	0.00	0.00	0.00	0.00	0.00	56.90	
PIPE 9-4	0.00	0.00	0.00	0.00	0.00	0.00	0.00	0.00	56.90	
PIPE 9-5	0.00	0.00	0.00	0.00	0.00	0.00	0.00	0.00	56.90	
PIPE 9-6	0.00	0.00	0.00	0.00	0.00	0.00	0.00	0.00	56.90	
PIPE 9-7	0.00	0.00	0.00	0.00	0.00	0.00	0.00	0.00	56.90	
PIPE 9-8	0.00	0.00	0.00	0.00	0.00	0.00	0.00	0.00	56.90	

PIPE 7	0.00	0.00	0.00	0.00	0.00	0.00	0.00	0.00	18.90	
PIPE 6B-1	0.00	0.00	0.00	0.00	0.00	0.00	0.00	0.00	32.70	
PIPE 6B-2	0.00	0.00	0.00	0.00	0.00	0.00	0.00	0.00	32.70	
PIPE 8	0.00	0.00	0.00	0.00	0.00	0.00	0.00	0.00	8.30	

Sewer Input Summary:

		Elevation			Loss Coefficients			Given Dimensions		
Element Name	**Sewer Length (ft)**	**Downstream Invert (ft)**	**Slope (%)**	**Upstream Invert (ft)**	**Mannings n**	**Bend Loss**	**Lateral Loss**	**Cross Section**	**Rise (ft or in)**	**Span (ft or in)**
PIPE 14	72.62	7055.59	0.5	7055.95	0.013	0.03	1.00	CIRCULAR	42.00 in	42.00 in
PIPE 13	17.38	7057.45	10.0	7059.19	0.013	1.32	0.00	CIRCULAR	24.00 in	24.00 in
PIPE 12-1	125.04	7056.15	0.5	7056.78	0.013	0.05	1.00	CIRCULAR	42.00 in	42.00 in
PIPE 12-2	63.60	7056.77	0.5	7057.09	0.013	0.54	0.36	CIRCULAR	42.00 in	42.00 in
PIPE 10	29.31	7059.10	1.0	7059.39	0.013	0.83	0.00	CIRCULAR	18.00 in	18.00 in
PIPE 11	5.96	7059.09	10.1	7059.69	0.013	0.38	0.00	CIRCULAR	18.00 in	18.00 in
PIPE 9-1	178.52	7057.59	1.4	7060.09	0.013	0.05	1.00	CIRCULAR	36.00 in	36.00 in
PIPE 9-2	61.53	7060.29	1.1	7060.97	0.013	0.10	0.73	CIRCULAR	36.00 in	36.00 in
PIPE 9-3	55.87	7060.97	1.1	7061.58	0.013	0.08	0.77	CIRCULAR	36.00 in	36.00 in
PIPE 9-4	49.39	7061.59	1.1	7062.13	0.013	0.08	0.77	CIRCULAR	36.00 in	36.00 in
PIPE 9-5	59.96	7062.33	1.0	7062.93	0.013	0.08	0.77	CIRCULAR	36.00 in	36.00 in
PIPE 9-6	46.32	7062.93	1.0	7063.39	0.013	0.08	0.77	CIRCULAR	36.00 in	36.00 in
PIPE 9-7	92.93	7063.39	1.0	7064.32	0.013	0.08	0.77	CIRCULAR	36.00 in	36.00 in
PIPE 9-8	75.46	7064.52	0.5	7064.90	0.013	0.90	0.28	CIRCULAR	36.00 in	36.00 in

PIPE 7	27.37	7065.90	1.0	7066.17	0.013	1.32	0.00	CIRCULAR	24.00 in	24.00 in
PIPE 6B-1	39.51	7065.39	0.5	7065.59	0.013	0.05	1.00	CIRCULAR	30.00 in	30.00 in
PIPE 6B-2	25.00	7065.60	0.5	7065.72	0.013	0.05	0.84	CIRCULAR	30.00 in	30.00 in
PIPE 8	2.97	7066.40	9.8	7066.69	0.013	1.32	0.00	CIRCULAR	18.00 in	18.00 in

Sewer Flow Summary:

	Full Flow Capacity		Critical Flow		Normal Flow						
Element Name	**Flow (cfs)**	**Velocity (fps)**	**Depth (in)**	**Velocity (fps)**	**Depth (in)**	**Velocity (fps)**	**Froude Number**	**Flow Condition**	**Flow (cfs)**	**Surcharged Length (ft)**	**Comment**
PIPE 14	71.33	7.41	42.00	8.07	42.00	8.07	0.00	Pressurized	77.60	72.62	
PIPE 13	71.73	22.83	16.05	6.18	7.13	17.63	4.75	Supercritical Jump	13.80	12.16	
PIPE 12-1	71.33	7.41	30.49	8.78	31.77	8.41	0.92	Pressurized	65.70	125.04	
PIPE 12-2	71.33	7.41	30.49	8.78	31.77	8.41	0.92	Pressurized	65.70	63.60	
PIPE 10	10.53	5.96	12.20	5.41	10.62	6.36	1.31	Pressurized	6.90	29.31	
PIPE 11	33.47	18.94	10.75	4.91	4.89	13.91	4.55	Pressurized	5.40	5.96	
PIPE 9-1	79.13	11.19	29.33	9.23	22.60	12.18	1.69	Pressurized	56.90	178.52	
PIPE 9-2	70.14	9.92	29.33	9.23	24.61	11.05	1.43	Supercritical Jump	56.90	53.51	
PIPE 9-3	70.14	9.92	29.33	9.23	24.61	11.05	1.43	Pressurized	56.90	55.87	
PIPE 9-4	70.14	9.92	29.33	9.23	24.61	11.05	1.43	Pressurized	56.90	49.39	
PIPE 9-5	66.88	9.46	29.33	9.23	25.51	10.62	1.34	Pressurized	56.90	59.96	
PIPE 9-6	66.88	9.46	29.33	9.23	25.51	10.62	1.34	Pressurized	56.90	46.32	

PIPE 9-7	66.88	9.46	29.33	9.23	25.51	10.62	1.34	Pressurized	56.90	92.93	
PIPE 9-8	47.29	6.69	36.00	8.05	36.00	8.05	0.00	Pressurized	56.90	75.46	
PIPE 7	22.68	7.22	18.77	7.17	16.74	8.08	1.26	Pressurized	18.90	27.37	
PIPE 6B-1	29.08	5.92	30.00	6.66	30.00	6.66	0.00	Pressurized	32.70	39.51	
PIPE 6B-2	29.08	5.92	30.00	6.66	30.00	6.66	0.00	Pressurized	32.70	25.00	
PIPE 8	32.91	18.63	13.39	5.89	6.16	15.52	4.46	Pressurized	8.30	2.97	

- A Froude number of 0 indicates that pressured flow occurs (adverse slope or undersized pipe).
- If the sewer is not pressurized, full flow represents the maximum gravity flow in the sewer.
- If the sewer is pressurized, full flow represents the pressurized flow conditions.

Sewer Sizing Summary:

			Existing		Calculated		Used			
Element Name	**Peak Flow (cfs)**	**Cross Section**	**Rise**	**Span**	**Rise**	**Span**	**Rise**	**Span**	**Area (ft^2)**	**Comment**
PIPE 14	77.60	CIRCULAR	42.00 in	42.00 in	48.00 in	48.00 in	42.00 in	42.00 in	9.62	Existing height is smaller than the suggested height. Existing width is smaller than the suggested width. Exceeds max. Depth/Rise
PIPE 13	13.80	CIRCULAR	24.00 in	24.00 in	18.00 in	18.00 in	24.00 in	24.00 in	3.14	
PIPE 12-1	65.70	CIRCULAR	42.00 in	42.00 in	42.00 in	42.00 in	42.00 in	42.00 in	9.62	
PIPE 12-2	65.70	CIRCULAR	42.00 in	42.00 in	42.00 in	42.00 in	42.00 in	42.00 in	9.62	
PIPE 10	6.90	CIRCULAR	18.00 in	18.00 in	18.00 in	18.00 in	18.00 in	18.00 in	1.77	

PIPE 11	5.40	CIRCULAR	18.00 in	18.00 in	18.00 in	18.00 in	18.00 in	18.00 in	1.77	
PIPE 9-1	56.90	CIRCULAR	36.00 in	36.00 in	33.00 in	33.00 in	36.00 in	36.00 in	7.07	
PIPE 9-2	56.90	CIRCULAR	36.00 in	36.00 in	36.00 in	36.00 in	36.00 in	36.00 in	7.07	
PIPE 9-3	56.90	CIRCULAR	36.00 in	36.00 in	36.00 in	36.00 in	36.00 in	36.00 in	7.07	
PIPE 9-4	56.90	CIRCULAR	36.00 in	36.00 in	36.00 in	36.00 in	36.00 in	36.00 in	7.07	
PIPE 9-5	56.90	CIRCULAR	36.00 in	36.00 in	36.00 in	36.00 in	36.00 in	36.00 in	7.07	
PIPE 9-6	56.90	CIRCULAR	36.00 in	36.00 in	36.00 in	36.00 in	36.00 in	36.00 in	7.07	
PIPE 9-7	56.90	CIRCULAR	36.00 in	36.00 in	36.00 in	36.00 in	36.00 in	36.00 in	7.07	
PIPE 9-8	56.90	CIRCULAR	36.00 in	36.00 in	42.00 in	42.00 in	36.00 in	36.00 in	7.07	Existing height is smaller than the suggested height. Existing width is smaller than the suggested width. Exceeds max. Depth/Rise
PIPE 7	18.90	CIRCULAR	24.00 in	24.00 in	24.00 in	24.00 in	24.00 in	24.00 in	3.14	
PIPE 6B-1	32.70	CIRCULAR	30.00 in	30.00 in	33.00 in	33.00 in	30.00 in	30.00 in	4.91	Existing height is smaller than the suggested height. Existing width is smaller than the suggested width. Exceeds max. Depth/Rise
PIPE 6B-2	32.70	CIRCULAR	30.00 in	30.00 in	33.00 in	33.00 in	30.00 in	30.00 in	4.91	Existing height is smaller than the suggested height. Existing width is smaller than the suggested width. Exceeds max. Depth/Rise
PIPE 8	8.30	CIRCULAR	18.00 in	18.00 in	18.00 in	18.00 in	18.00 in	18.00 in	1.77	

- Calculated diameter was determined by sewer hydraulic capacity rounded up to the nearest commercially available size.
- Sewer sizes should not decrease downstream.

- All hydraulics where calculated using the 'Used' parameters.

Grade Line Summary:

Tailwater Elevation (ft): 0.00

	Invert Elev.		Downstream Manhole Losses		HGL		EGL		
Element Name	**Downstream (ft)**	**Upstream (ft)**	**Bend Loss (ft)**	**Lateral Loss (ft)**	**Downstream (ft)**	**Upstream (ft)**	**Downstream (ft)**	**Friction Loss (ft)**	**Upstream (ft)**
PIPE 14	7055.59	7055.95	0.00	0.00	7059.09	7059.52	7060.10	0.43	7060.53
PIPE 13	7057.45	7059.19	0.40	0.00	7060.62	7060.62	7060.92	0.21	7061.13
PIPE 12-1	7056.15	7056.78	0.04	0.29	7060.12	7060.66	7060.85	0.53	7061.38
PIPE 12-2	7056.77	7057.09	0.39	0.46	7061.51	7061.78	7062.23	0.27	7062.50
PIPE 10	7059.10	7059.39	0.20	0.00	7062.46	7062.59	7062.70	0.13	7062.83
PIPE 11	7059.09	7059.69	0.06	0.00	7062.41	7062.43	7062.56	0.02	7062.57
PIPE 9-1	7057.59	7060.09	0.05	0.00	7061.83	7063.12	7062.84	1.29	7064.13
PIPE 9-2	7060.29	7060.97	0.10	0.27	7063.49	7063.86	7064.50	0.39	7064.89
PIPE 9-3	7060.97	7061.58	0.08	0.23	7064.19	7064.60	7065.20	0.40	7065.60
PIPE 9-4	7061.59	7062.13	0.08	0.23	7064.91	7065.27	7065.92	0.36	7066.27
PIPE 9-5	7062.33	7062.93	0.08	0.23	7065.58	7066.01	7066.59	0.43	7067.02
PIPE 9-6	7062.93	7063.39	0.08	0.23	7066.33	7066.66	7067.33	0.34	7067.67
PIPE 9-7	7063.39	7064.32	0.08	0.23	7066.97	7067.65	7067.98	0.67	7068.65
PIPE 9-8	7064.52	7064.90	0.91	0.72	7069.28	7069.82	7070.28	0.55	7070.83

PIPE 7	7065.90	7066.17	0.74	0.00	7071.01	7071.20	7071.57	0.19	7071.76
PIPE 6B-1	7065.39	7065.59	0.03	0.32	7070.49	7070.74	7071.18	0.25	7071.43
PIPE 6B-2	7065.60	7065.72	0.03	0.11	7070.88	7071.04	7071.57	0.16	7071.73
PIPE 8	7066.40	7066.69	0.45	0.00	7070.94	7070.96	7071.28	0.02	7071.30

- Bend and Lateral losses only apply when there is an outgoing sewer. The system outfall, sewer #0, is not considered a sewer.
- Bend loss = Bend K * V_fi ^ 2/(2*g)
- Lateral loss = V_fo ^ 2/(2*g)- Junction Loss K * V_fi ^ 2/(2*g).
- Friction loss is always Upstream EGL - Downstream EGL.

Excavation Estimate:

The trench side slope is 1.0 ft/ft
The minimum trench width is 2.00 ft

					Downstream			Upstream				
Element Name	**Length (ft)**	**Wall (in)**	**Bedding (in)**	**Bottom Width (ft)**	**Top Width (ft)**	**Trench Depth (ft)**	**Cover (ft)**	**Top Width (ft)**	**Trench Depth (ft)**	**Cover (ft)**	**Volume (cu. yd)**	**Comment**
PIPE 14	72.62	4.50	6.00	7.25	0.00	0.88	0.00	17.10	10.68	5.93	145.26	Sewer Too Shallow
PIPE 13	17.38	3.00	4.00	5.50	15.60	8.88	6.05	11.52	6.84	4.01	38.95	
PIPE 12-1	125.04	4.50	6.00	7.25	16.69	10.47	5.72	19.02	11.64	6.89	502.88	
PIPE 12-2	63.60	4.50	6.00	7.25	19.04	11.64	6.89	20.68	12.47	7.72	299.86	
PIPE 10	29.31	2.50	4.00	4.92	18.67	10.12	7.87	18.76	10.17	7.92	105.82	
PIPE 11	5.96	2.50	4.00	4.92	18.68	10.13	7.88	18.16	9.87	7.62	20.93	

PIPE 9-1	178.52	4.00	6.00	6.67	20.18	11.92	7.76	20.58	12.12	7.96	840.84	
PIPE 9-2	61.53	4.00	6.00	6.67	20.17	11.92	7.75	20.56	12.11	7.95	289.52	
PIPE 9-3	55.87	4.00	6.00	6.67	20.57	12.12	7.95	20.86	12.26	8.10	270.27	
PIPE 9-4	49.39	4.00	6.00	6.67	20.85	12.26	8.09	21.32	12.49	8.33	245.99	
PIPE 9-5	59.96	4.00	6.00	6.67	20.92	12.29	8.13	21.36	12.51	8.35	299.95	
PIPE 9-6	46.32	4.00	6.00	6.67	21.37	12.52	8.35	21.74	12.70	8.54	239.28	
PIPE 9-7	92.93	4.00	6.00	6.67	21.74	12.70	8.54	22.58	13.12	8.96	502.98	
PIPE 9-8	75.46	4.00	6.00	6.67	22.17	12.92	8.75	20.28	11.97	7.81	380.67	
PIPE 7	27.37	3.00	4.00	5.50	19.29	10.73	7.89	19.34	10.75	7.92	108.24	
PIPE 6B-1	39.51	3.50	6.00	6.08	19.80	11.44	7.86	19.86	11.47	7.89	171.08	
PIPE 6B-2	25.00	3.50	6.00	6.08	19.85	11.47	7.88	20.82	11.95	8.37	113.03	
PIPE 8	2.97	2.50	4.00	4.92	18.78	10.18	7.93	18.80	10.19	7.94	10.80	

Total earth volume for sewer trenches = 4586 cubic yards.

- The trench was estimated to have a bottom width equal to the outer pipe diameter plus 36 inches.
- If the calculated width of the trench bottom is less than the minimum acceptable width, the minimum acceptable width was used.
- The sewer wall thickness is equal to: (equivalent diameter in inches/12)+1 inches
- The sewer bedding thickness is equal to:
    - Four inches for pipes less than 33 inches.
    - Six inches for pipes less than 60 inches.
    - Eight inches for all larger sizes.

DRAINAGE MAPS

CLASSIC SM
CONSULTING
ENGINEERS & SURVEYORS

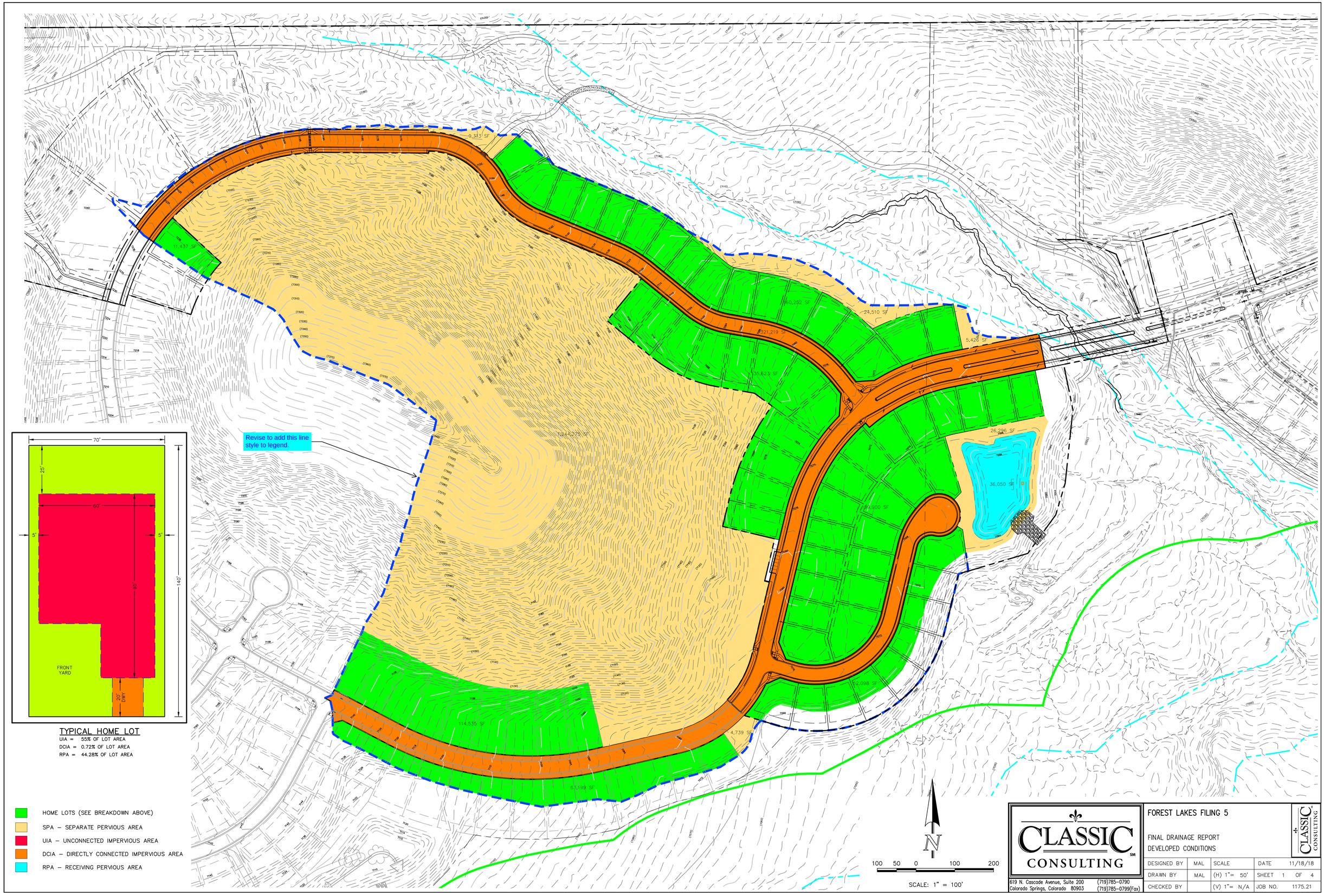

CLASSIC CONSULTING

619 N. Cascade Avenue, Suite 200
Colorado Springs, Colorado 80903
(719)785-0790
(719)785-0799(Fax)

FOREST LAKES FILING 5

FINAL DRAINAGE REPORT
DEVELOPED CONDITIONS

DESIGNED BY	MAL	SCALE		DATE	11/18/18
DRAWN BY	MAL	(H) 1"= 50'		SHEET	1 OF 4
CHECKED BY		(V) 1"= N/A		JOB NO.	1175.21

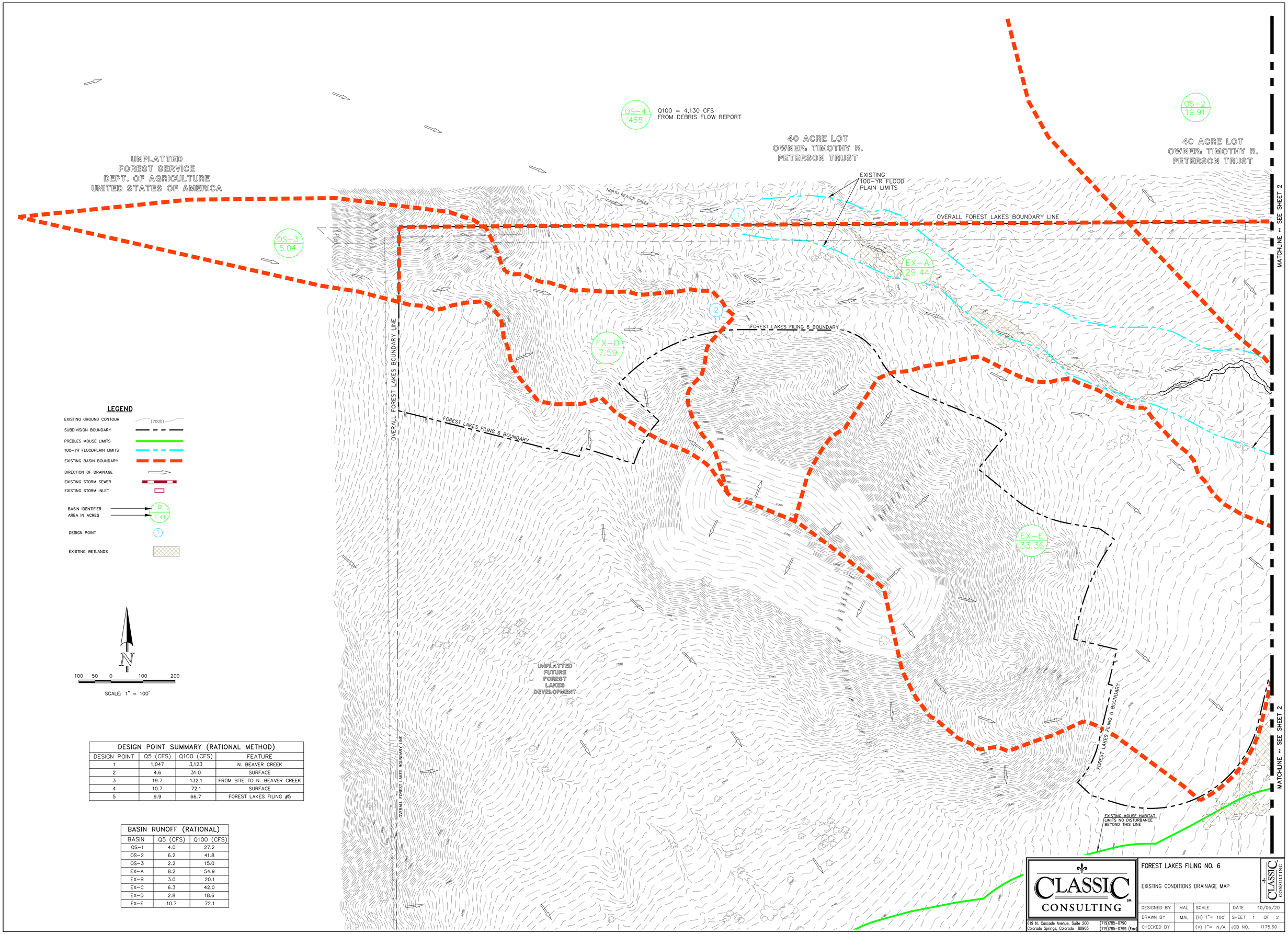

DESIGN POINT SUMMARY (RATIONAL METHOD)			
DESIGN POINT	Q5 (CFS)	Q100 (CFS)	FEATURE
1	1,047	3,123	N. BEAVER CREEK
2	4.6	31.0	SURFACE
3	19.7	132.1	FROM SITE TO N. BEAVER CREEK
4	10.7	72.1	SURFACE
5	9.9	66.7	FOREST LAKES FILING #5

BASIN RUNOFF (RATIONAL)		
BASIN	Q5 (CFS)	Q100 (CFS)
OS-1	4.0	27.2
OS-2	6.2	41.8
OS-3	2.2	15.0
EX-A	8.2	54.9
EX-B	3.0	20.1
EX-C	6.3	42.0
EX-D	2.8	18.6
EX-E	10.7	72.1

CLASSIC CONSULTING
619 N. Cascade Avenue, Suite 200
Colorado Springs, Colorado 80903
(719)785-0790
(719)785-0799 (Fax)

FOREST LAKES FILING NO. 6

EXISTING CONDITIONS DRAINAGE MAP

DESIGNED BY	MAL	SCALE		DATE	10/05/20
DRAWN BY	MAL	(H) 1"= 100'		SHEET	1 OF 2
CHECKED BY		(V) 1"= N/A		JOB NO.	1175.60

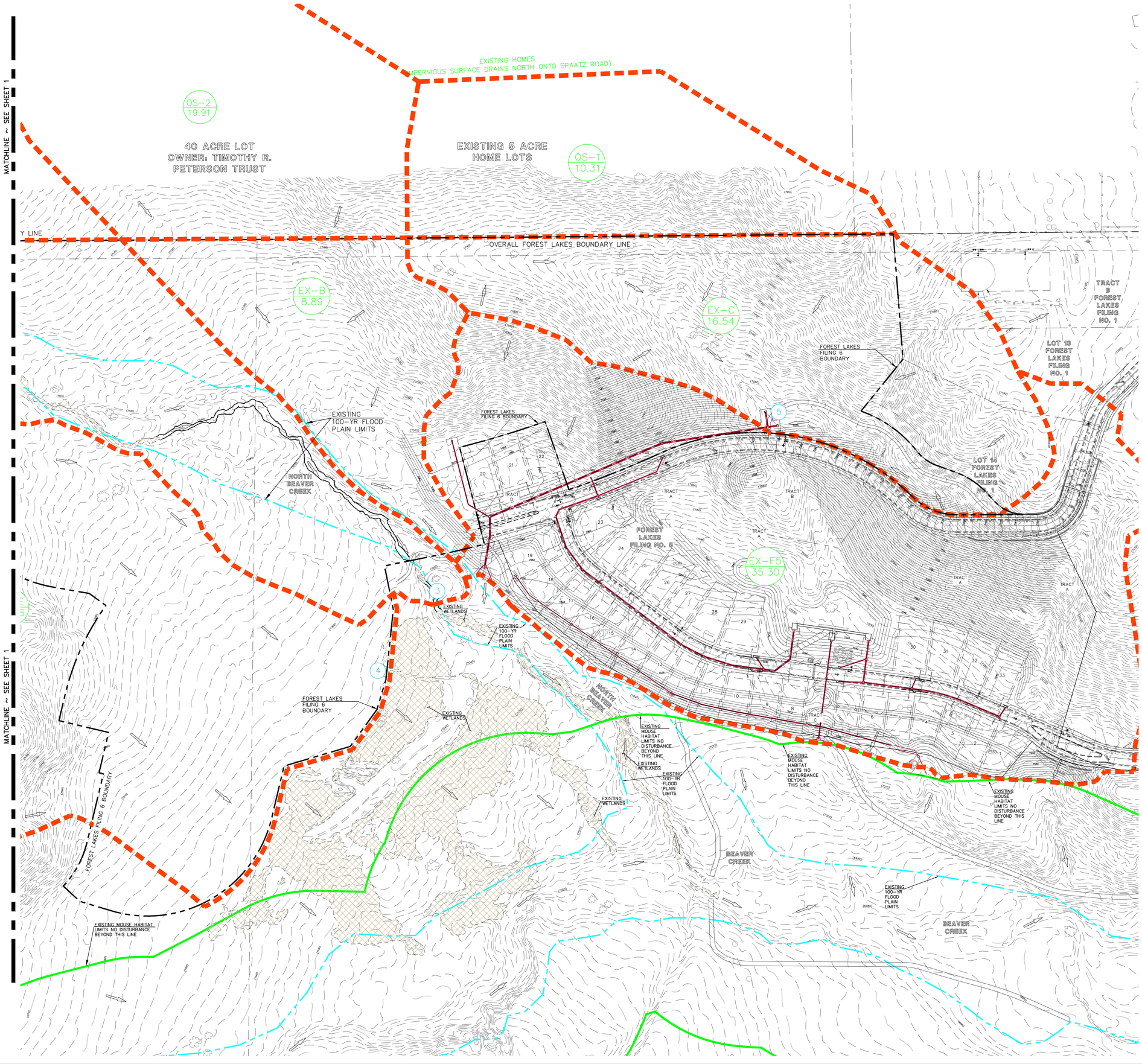

100 50 0 100 200

SCALE: 1" = 100'

LEGEND

- EXISTING GROUND CONTOUR (7000)
- SUBDIVISION BOUNDARY
- PREBLES MOUSE LIMITS
- 100-YR FLOODPLAIN LIMITS
- EXISTING BASIN BOUNDARY
- DIRECTION OF DRAINAGE
- EXISTING STORM SEWER
- EXISTING STORM INLET
- BASIN IDENTIFIER / AREA IN ACRES (D / 1.41)
- DESIGN POINT (1)
- EXISTING WETLANDS

DESIGN POINT SUMMARY (RATIONAL METHOD)			
DESIGN POINT	Q5 (CFS)	Q100 (CFS)	FEATURE
1	1,047	3,123	N. BEAVER CREEK
2	4.6	31.0	SURFACE
3	19.7	132.1	FROM SITE TO N. BEAVER CREEK
4	10.7	72.1	SURFACE
5	9.9	66.7	FOREST LAKES FILING #5

BASIN RUNOFF (RATIONAL)		
BASIN	Q5 (CFS)	Q100 (CFS)
OS-1	4.0	27.2
OS-2	6.2	41.8
OS-3	2.2	15.0
EX-A	8.2	54.9
EX-B	3.0	20.1
EX-C	6.3	42.0
EX-D	2.8	18.6
EX-E	10.7	72.1

CLASSIC CONSULTING SM
619 N. Cascade Avenue, Suite 200
Colorado Springs, Colorado 80903
(719)785-0790
(719)785-0799 (Fax)

FOREST LAKES FILING NO. 6

EXISTING CONDITIONS DRAINAGE MAP

CLASSIC CONSULTING

DESIGNED BY	MAL	SCALE		DATE	10/05/20
DRAWN BY	MAL	(H) 1"= 100'		SHEET	2 OF 2
CHECKED BY		(V) 1"= N/A		JOB NO.	1175.60

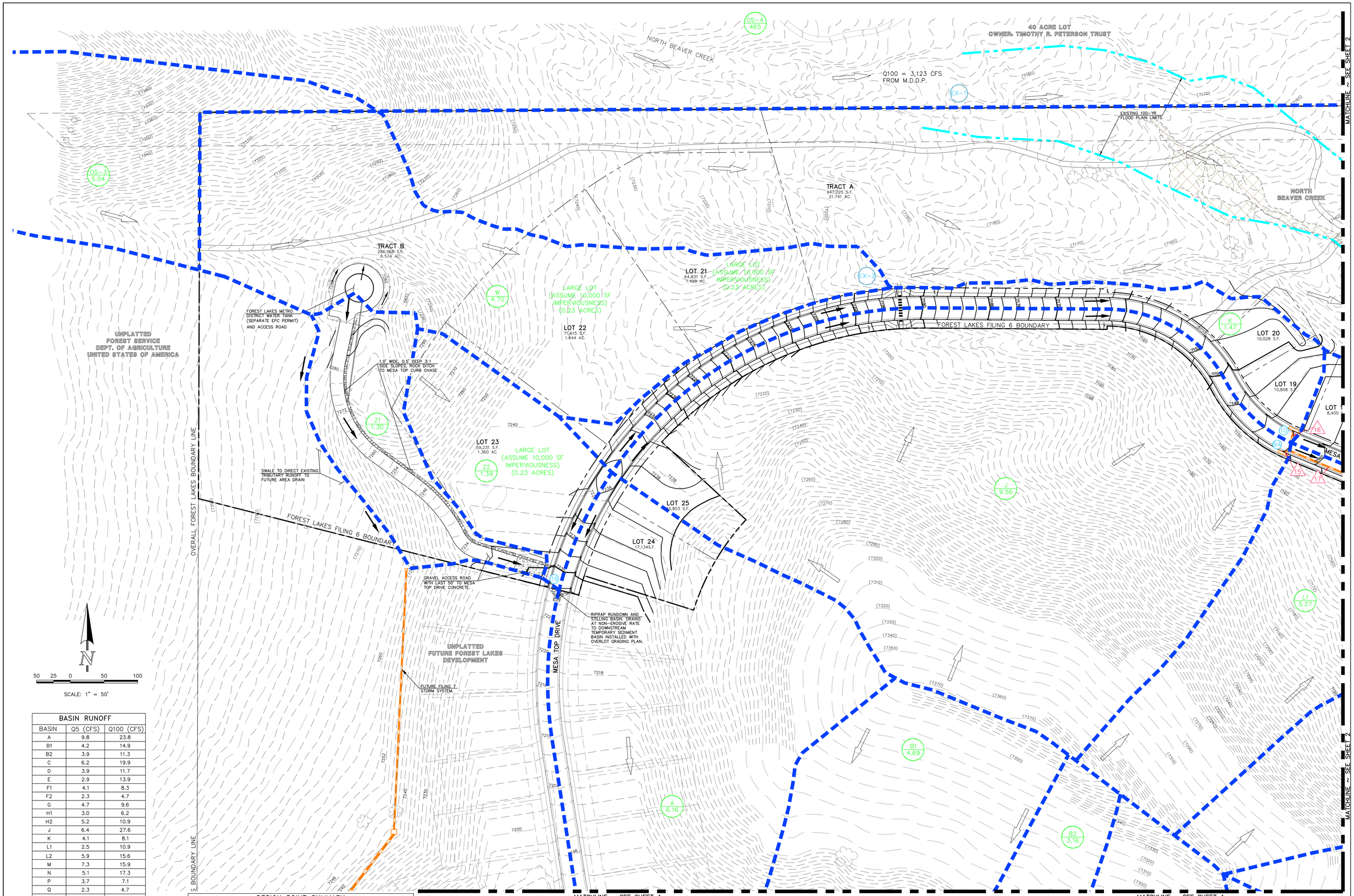

BASIN RUNOFF		
BASIN	Q5 (CFS)	Q100 (CFS)
A	9.8	23.8
B1	4.2	14.9
B2	3.9	11.3
C	6.2	19.9
D	3.9	11.7
E	2.9	13.9
F1	4.1	8.3
F2	2.3	4.7
G	4.7	9.6
H1	3.0	6.2
H2	5.2	10.9
J	6.4	27.6
K	4.1	8.1
L1	2.5	10.9
L2	5.9	15.6
M	7.3	15.9
N	5.1	17.3
P	3.7	7.1
Q	2.3	4.7
R	1.5	2.8
S	1.7	3.4
T	4.1	9.3
U	1.3	3.6
W	3.2	13.4
X	5.6	37.7
Y	3.6	20.4
Z1	1.5	5.1
Z2	1.5	5.2

DESIGN POINT SUMMARY			
DESIGN POINT	Q5 (CFS)	Q100 (CFS)	FEATURE
9A	6.4	27.6	15' TYPE R AT-GRADE
9B	2.4	21.6	15' TYPE R AT-GRADE
10	4.1	8.1	15' TYPE R AT-GRADE
19	2.9	9.9	SURFACE/RIPRAP RUNDOWN
EX-1	1,047	3,123	N. BEAVER CREEK
EX-2	5.1	25.8	SURFACE
EX-3	18.0	111.2	FROM SITE TO N. BEAVER CREEK

PIPE RUN SUMMARY			
PIPE	Q5 (CFS)	Q100 (CFS)	PIPE SIZE
15	6.4	16.4	24"
16	4.1	7.9	18"
17	10.3	23.8	24"

LEGEND

- EXISTING GROUND CONTOUR (7000)
- SUBDIVISION BOUNDARY
- PREBBLES MOUSE LIMITS
- 100-YR FLOODPLAIN LIMITS
- PROPOSED BASIN BOUNDARY
- DIRECTION OF DRAINAGE
- EXISTING STORM SEWER
- EXISTING STORM INLET
- PROPOSED STORM SEWER
- PROPOSED STORM INLET
- BASIN IDENTIFIER / AREA IN ACRES (D / 1.41)
- DESIGN POINT (1)
- PIPE RUN (1)
- EXISTING WETLANDS

CLASSIC CONSULTING SM
619 N. Cascade Avenue, Suite 200
Colorado Springs, Colorado 80903
(719)785-0790
(719)785-0799 (Fax)

FOREST LAKES FILING NO. 6

DEVELOPED CONDITIONS DRAINAGE MAP

CLASSIC CONSULTING

DESIGNED BY	MAL	SCALE		DATE	10/05/20
DRAWN BY	MAL	(H) 1"= 50'		SHEET	1 OF 4
CHECKED BY		(V) 1"= N/A		JOB NO.	1175.60

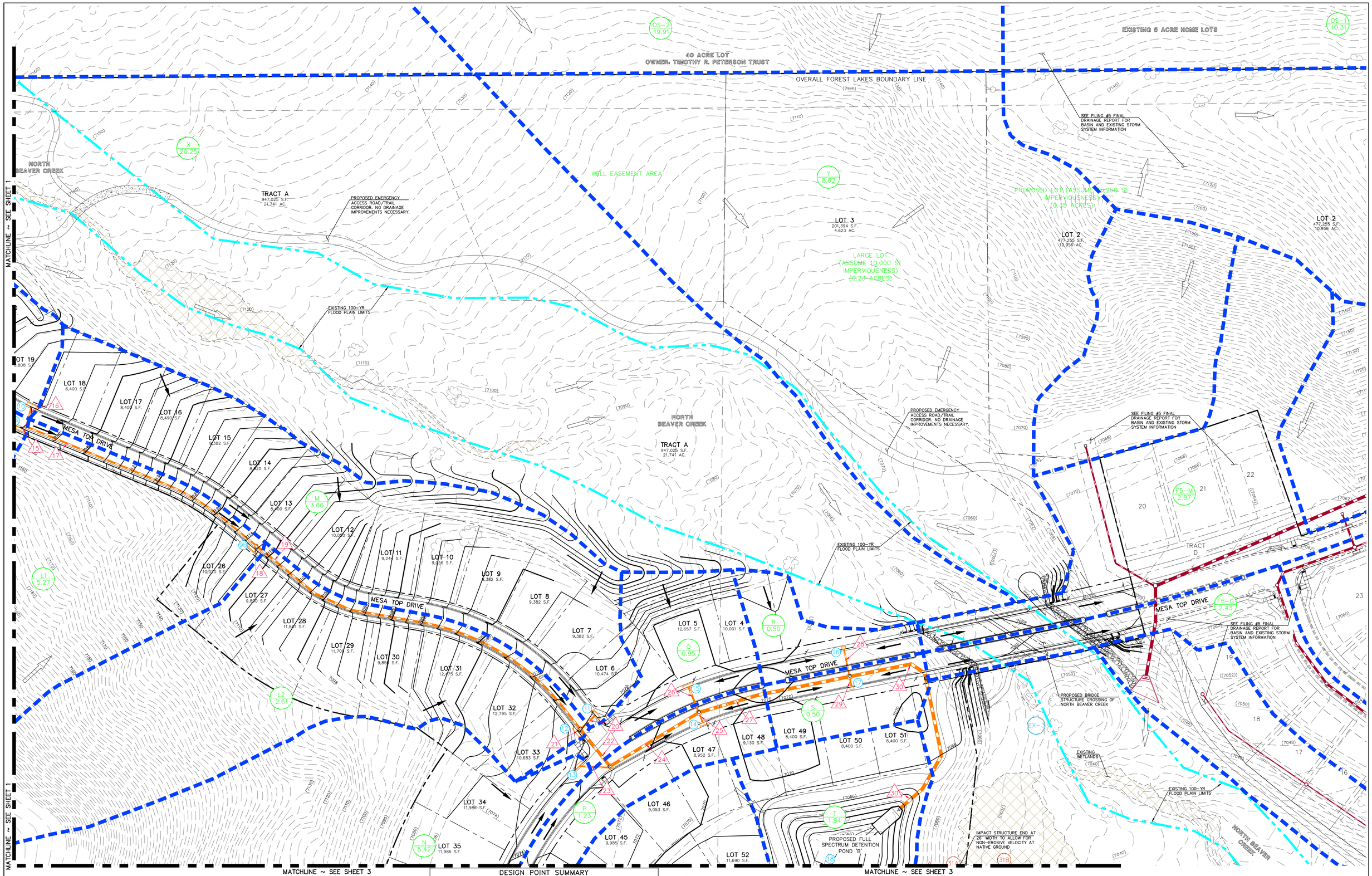

BASIN RUNOFF		
BASIN	Q5 (CFS)	Q100 (CFS)
A	9.8	23.8
B1	4.2	14.9
B2	3.9	11.3
C	6.2	19.9
D	3.9	11.7
E	2.9	13.9
F1	4.1	8.3
F2	2.3	4.7
G	4.7	9.6
H1	3.0	6.2

BASIN	Q5 (CFS)	Q100 (CFS)
H2	5.2	10.9
J	6.4	27.6
K	4.1	8.1
L1	2.5	10.9
L2	5.9	15.6
M	7.3	15.9
N	5.1	17.3
P	3.7	7.1
Q	2.3	4.7
R	1.5	2.8
S	1.7	3.4

BASIN	Q5 (CFS)	Q100 (CFS)
T	4.1	9.3
U	1.3	3.6
W	3.2	13.4
X	5.6	37.7
Y	3.6	20.4
Z1	1.5	5.1
Z2	1.5	5.2

DESIGN POINT SUMMARY			
DESIGN POINT	Q5 (CFS)	Q100 (CFS)	FEATURE
9A	6.4	27.6	15' TYPE R AT-GRADE
9B	2.4	21.6	15' TYPE R AT-GRADE
10	4.1	8.1	15' TYPE R AT-GRADE
11	7.3	16.1	15' TYPE R AT-GRADE
12	5.7	21.9	15' TYPE R AT-GRADE
13	5.1	17.3	15' TYPE R AT-GRADE
14	3.7	7.1	10' TYPE R SUMP
15	2.1	18.5	15' TYPE R SUMP
16	1.5	2.8	5' TYPE R SUMP
17	1.7	3.4	5' TYPE R SUMP
18	66.4	183.5	FSD/SWQ POND 'B'
EX-3	18.0	111.2	FROM SITE TO N. BEAVER CREEK

PIPE RUN SUMMARY			
PIPE	Q5 (CFS)	Q100 (CFS)	PIPE SIZE
15	6.4	16.4	24"
16	4.1	7.9	18"
17	10.3	23.8	24"
18	2.4	14.7	24"
19	12.5	38.1	30"
20	7.3	12.5	24"
21	5.7	14.7	24"
22	24.9	63.9	42"
23	5.1	13.0	18"
24	29.7	76.2	42"
25	3.7	7.1	18"

PIPE	Q5 (CFS)	Q100 (CFS)	PIPE SIZE
26	2.1	18.5	24"
27	34.1	98.7	48"
28	1.5	2.8	18"
29	1.7	3.4	18"
30	36.2	102.2	48"
31	0.9	60.0	30"

50 25 0 50 100

SCALE: 1" = 50'

CLASSIC CONSULTING SM
619 N. Cascade Avenue, Suite 200 (719)785-0790
Colorado Springs, Colorado 80903 (719)785-0799 (Fax)

FOREST LAKES FILING NO. 6

DEVELOPED CONDITIONS DRAINAGE MAP

CLASSIC CONSULTING

DESIGNED BY	MAL	SCALE		DATE	10/05/20
DRAWN BY	MAL	(H) 1"=	50'	SHEET	2 OF 4
CHECKED BY		(V) 1"=	N/A	JOB NO.	1175.60

BASIN RUNOFF		
BASIN	Q5 (CFS)	Q100 (CFS)
A	9.8	23.8
B1	4.2	14.9
B2	3.9	11.3
C	6.2	19.9
D	3.9	11.7
E	2.9	13.9
F1	4.1	8.3
F2	2.3	4.7
G	4.7	9.6
H1	3.0	6.2
H2	5.2	10.9
J	6.4	27.6
K	4.1	8.1
L1	2.5	10.9
L2	5.9	15.6
M	7.3	15.9
N	5.1	17.3
P	3.7	7.1
Q	2.3	4.7
R	1.5	2.8
S	1.7	3.4
T	4.1	9.3
U	1.3	3.6
W	3.2	13.4
X	5.6	37.7
Y	3.6	20.4
Z1	1.5	5.1
Z2	1.5	5.2

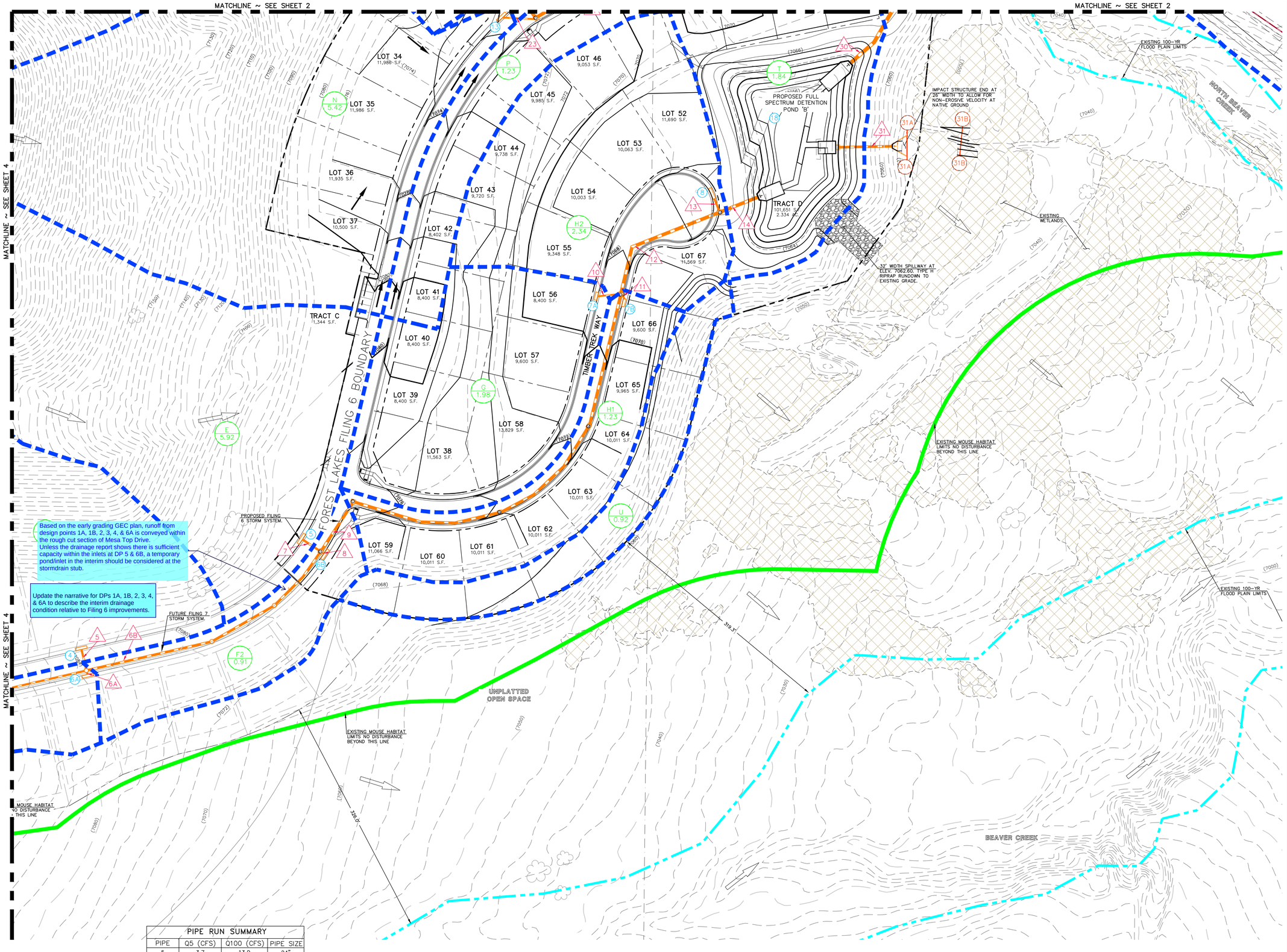

50 25 0 50 100

SCALE: 1" = 50'

LEGEND

- EXISTING GROUND CONTOUR (7000)
- SUBDIVISION BOUNDARY
- PREBLES MOUSE LIMITS
- 100-YR FLOODPLAIN LIMITS
- PROPOSED BASIN BOUNDARY
- DIRECTION OF DRAINAGE
- EXISTING STORM SEWER
- EXISTING STORM INLET
- PROPOSED STORM SEWER
- PROPOSED STORM INLET
- BASIN IDENTIFIER / AREA IN ACRES (D / 1.41)
- DESIGN POINT (1)
- PIPE RUN (1)
- EXISTING WETLANDS

DESIGN POINT SUMMARY			
DESIGN POINT	Q5 (CFS)	Q100 (CFS)	FEATURE
4	3.7	19.8	15' TYPE R AT-GRADE (FUT.)
5	2.8	18.9	15' TYPE R SUMP
6A	4.1	8.3	5' TYPE R AT-GRADE (FUT.)
6B	3.8	9.4	10' TYPE R SUMP
7A	4.7	9.6	10' TYPE R AT-GRADE
7B	3.0	6.2	10' TYPE R AT-GRADE
8	5.4	14.2	15' TYPE R SUMP
18	66.4	183.5	FSD/SWQ POND 'B'

PIPE RUN SUMMARY			
PIPE	Q5 (CFS)	Q100 (CFS)	PIPE SIZE
5	3.7	13.9	24"
6A	2.6	3.6	18"
6B	12.0	32.7	30"
7	2.8	18.9	24"
8	4.1	8.3	18"
9	17.7	56.9	36"
10	4.5	6.9	18"
11	3.0	5.4	18"
12	23.7	65.7	42"
13	5.4	14.2	24"
14	28.2	77.6	42"
30	36.2	102.2	48"
31	0.9	60.0	30"

CLASSIC CONSULTING SM
619 N. Cascade Avenue, Suite 200
Colorado Springs, Colorado 80903
(719)785-0790
(719)785-0799 (Fax)

FOREST LAKES FILING NO. 6

DEVELOPED CONDITIONS DRAINAGE MAP

CLASSIC CONSULTING

DESIGNED BY	MAL	SCALE		DATE	10/05/20
DRAWN BY	MAL	(H) 1"= 50'		SHEET	3 OF 4
CHECKED BY		(V) 1"= N/A		JOB NO.	1175.60

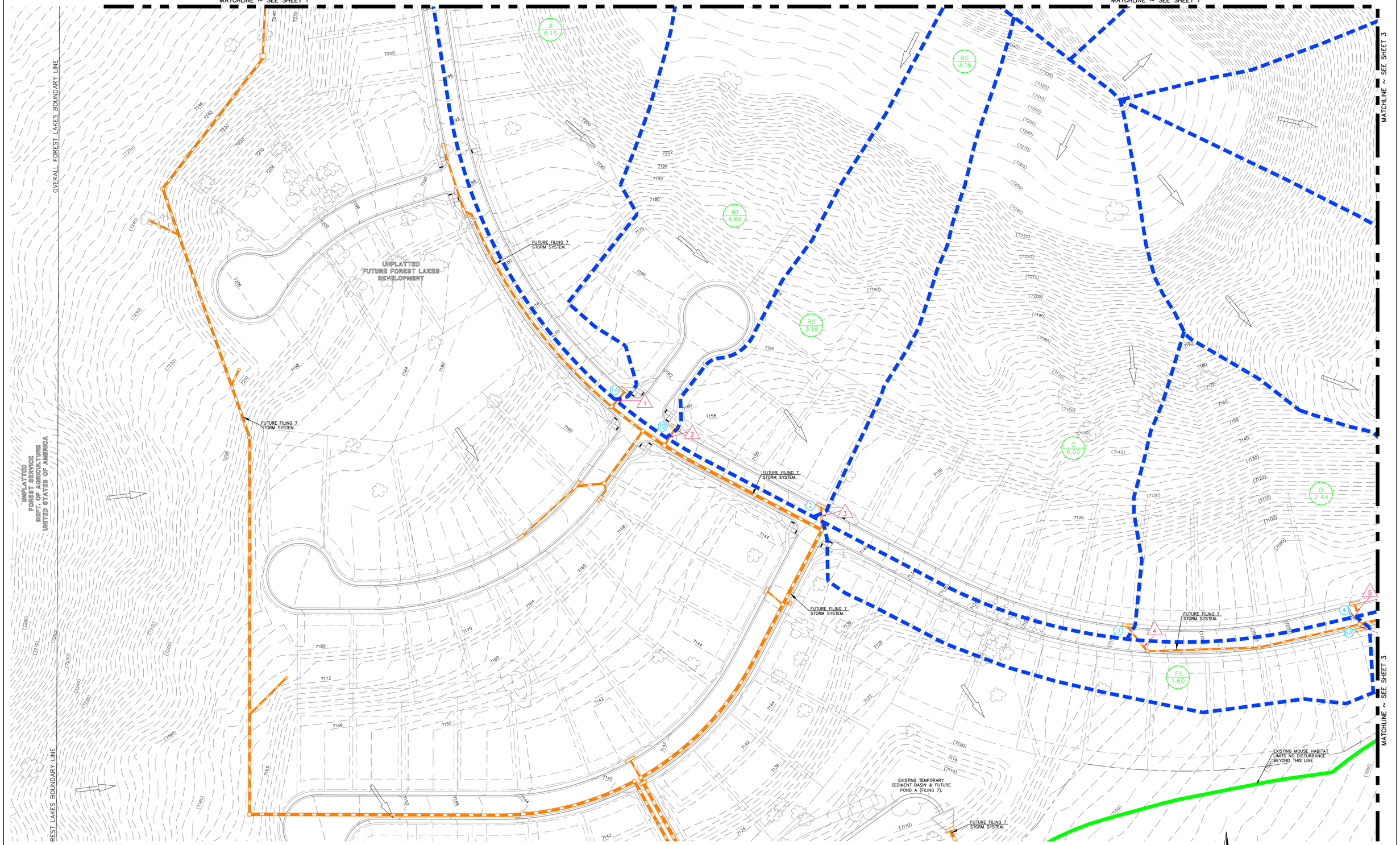

BASIN RUNOFF		
BASIN	Q5 (CFS)	Q100 (CFS)
A	9.8	23.8
B1	4.2	14.9
B2	3.9	11.3
C	6.2	19.9
D	3.9	11.7
E	2.9	13.9
F1	4.1	8.3
F2	2.3	4.7
G	4.7	9.6
H1	3.0	6.2
H2	5.2	10.9
J	6.4	27.6
K	4.1	8.1
L1	2.5	10.9

BASIN	Q5 (CFS)	Q100 (CFS)
L2	5.9	15.6
M	7.3	15.9
N	5.1	17.3
P	3.7	7.1
Q	2.3	4.7
R	1.5	2.8
S	1.7	3.4
T	4.1	9.3
U	1.3	3.6
W	3.2	13.4
X	5.6	37.7
Y	3.6	20.4
Z1	1.5	5.1
Z2	1.5	5.2

DESIGN POINT SUMMARY			
DESIGN POINT	Q5 (CFS)	Q100 (CFS)	FEATURE
1A	9.8	15.4	15' TYPE R AT-GRADE (FUT.)
1B	4.6	22.9	15' TYPE R AT-GRADE (FUT.)
2	3.7	18.5	15' TYPE R AT-GRADE (FUT.)
3	5.9	24.3	15' TYPE R AT-GRADE (FUT.)
4	3.7	19.8	15' TYPE R AT-GRADE (FUT.)
5	2.8	18.9	15' TYPE R SUMP
6A	4.1	8.3	5' TYPE R AT-GRADE (FUT.)
6B	3.8	9.4	10' TYPE R SUMP

PIPE RUN SUMMARY			
PIPE	Q5 (CFS)	Q100 (CFS)	PIPE SIZE
1	9.2	15.3	24"
2	4.6	15.0	24"
3	3.7	13.4	24"
4	5.9	15.5	24"
5	3.7	13.9	24"

LEGEND

- EXISTING GROUND CONTOUR (7000)
- SUBDIVISION BOUNDARY
- PREBLES MOUSE LIMITS
- 100-YR FLOODPLAIN LIMITS
- PROPOSED BASIN BOUNDARY
- DIRECTION OF DRAINAGE
- DESIGN POINT (1)
- PIPE RUN 1
- EXISTING WETLANDS
- EXISTING STORM SEWER
- EXISTING STORM INLET
- PROPOSED STORM SEWER
- PROPOSED STORM INLET
- BASIN IDENTIFIER D / AREA IN ACRES 1.41

N

50 25 0 50 100

SCALE: 1" = 50'

CLASSIC CONSULTING SM
619 N. Cascade Avenue, Suite 200 (719)785-0790
Colorado Springs, Colorado 80903 (719)785-0799 (Fax)

FOREST LAKES FILING NO. 6

DEVELOPED CONDITIONS DRAINAGE MAP

CLASSIC CONSULTING

DESIGNED BY	MAL	SCALE		DATE	10/05/20
DRAWN BY	MAL	(H) 1"= 100'		SHEET	4 OF 4
CHECKED BY		(V) 1"= N/A		JOB NO.	1175.60

Drainage V_1 redlines.pdf Markup Summary 12-4-2020

lpackman (1)

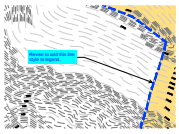

Subject: Callout
Page Label: 146
Author: lpackman
Date: 11/24/2020 2:55:21 PM
Status:
Color:
Layer:
Space:

Revise to add this line style to legend.

GReese (1)

Subject: SW - Text Box
Page Label: 1
Author: GReese
Date: 11/19/2020 2:07:40 PM
Status:
Color:
Layer:
Space:

SF-20-027

dsdlaforce (11)

Subject: Callout
Page Label: 20
Author: dsdlaforce
Date: 12/1/2020 1:24:10 PM
Status:
Color:
Layer:
Space:

Revise Step 4. This should be n/a since this is not an industrial or commercial site.

Subject: Image
Page Label: 20
Author: dsdlaforce
Date: 12/1/2020 1:24:14 PM
Status:
Color:
Layer:
Space:

Subject: Callout
Page Label: 16
Author: dsdlaforce
Date: 12/1/2020 10:04:32 AM
Status:
Color:
Layer:
Space:

Update. The latest version is MH-Detention v4.03 (released May 2020)

Subject: Callout
Page Label: 18
Author: dsdlaforce
Date: 12/1/2020 10:41:14 AM
Status:
Color:
Layer:
Space:

Provide a statement that Basins X & Y consist of large lot single family sites, stream stabilization sites and trails which are excluded from permanent water quality per ECM Appendix I Section I.7.1.B.5, Section I.7.1.B.5.8, and Section I.7.1.B.9

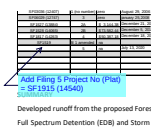

Subject: Callout
Page Label: 21
Author: dsdlaforce
Date: 12/1/2020 11:29:24 AM
Status:
Color:
Layer:
Space:

Add Filing 5 Project No (Plat) = SF1915 (14540)

Subject: Cloud+
Page Label: 21
Author: dsdlaforce
Date: 12/1/2020 12:49:31 PM
Status:
Color:
Layer:
Space:

Being reviewed by the Engineering Manager.

Subject: Callout
Page Label: 151
Author: dsdlaforce
Date: 12/1/2020 4:47:50 PM
Status:
Color:
Layer:
Space:

Based on the early grading GEC plan, runoff from design points 1A, 1B, 2, 3, 4, & 6A is conveyed within the rough cut section of Mesa Top Drive. Unless the drainage report shows there is sufficient capacity within the inlets at DP 5 & 6B, a temporary pond/inlet in the interim should be considered at the stormdrain stub.

Subject: Callout
Page Label: 6
Author: dsdlaforce
Date: 12/1/2020 8:31:40 AM
Status:
Color:
Layer:
Space:

Revise statement. This filing is installing the Emergency Access Road with a concrete section within the channel across the wetlands per the preliminary plan

---

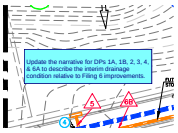

Subject: Text Box
Page Label: 151
Author: dsdlaforce
Date: 12/1/2020 9:43:45 AM
Status:
Color:
Layer:
Space:

Update the narrative for DPs 1A, 1B, 2, 3, 4, & 6A to describe the interim drainage condition relative to Filing 6 improvements.

Subject: Text Box
Page Label: 13
Author: dsdlaforce
Date: 12/1/2020 9:49:40 AM
Status:
Color:
Layer:
Space:

Provide a narrative description of Design Point 9B

Subject: Re: Text Box
Page Label: 128
Author: dsdlaforce
Date: 12/3/2020 9:42:15 AM
Status:
Color:
Layer:
Space:

Delete comment