PRIVATE DETENTION BASIN /

STORMWATER QUALITY BEST MANAGEMENT PRACTICE

MAINTENANCE AGREEMENT AND EASEMENT

This PRIVATE DETENTION BASIN / STORMWATER QUALITY BEST MANAGEMENT PRACTICE MAINTENANCE AGREEMENT AND EASEMENT (Agreement) is made by and between EL PASO COUNTY by and through THE BOARD OF COUNTY COMMISSIONERS OF EL PASO COUNTY, COLORADO (Board or County) and HONOR CHARTER BUILDING CORPORATION (Developer). The above may occasionally be referred to herein singularly as "Party" and collectively as "Parties."

Recitals

A. WHEREAS, Developer is the owner of certain real estate (the Property) in El Paso County, Colorado, which Property is legally described in Exhibit A attached hereto and incorporated herein by this reference; and

B. WHEREAS, Developer desires to develop on the Property a land use to be known as HONOR CHARTER SCHOOL and

C. WHEREAS, the development of this Property will substantially increase the volume of water runoff and will decrease the quality of the stormwater runoff from the Property, and, therefore, it is in the best interest of public health, safety and welfare for the County to condition approval of this land use on Developer's promise to construct adequate drainage, water runoff control facilities, and stormwater quality structural Best Management Practices ("BMPs") for the land use; and

D. WHEREAS, Chapter 8, Section 8.4.5 of the El Paso County Land Development Code, as periodically amended, promulgated pursuant to Section 30-28-133(1), Colorado Revised Statutes (C.R.S.), requires the County to condition approval of all subdivisions on a developer's promise to so construct adequate drainage, water runoff control facilities, and BMPs in subdivisions; and

E. WHEREAS, the Drainage Criteria Manual, Volume 2, as amended by Appendix I of the El Paso County Engineering Criteria Manual (ECM), as each may be periodically amended, promulgated pursuant to the County's Colorado Discharge Permit System General Permit (MS4 Permit) as required by Phase II of the National Pollutant Discharge Elimination System (NPDES), which MS4 Permit requires that the County take measures to protect the quality of stormwater from sediment and other contaminants, requires subdividers, developers, landowners, and owners of facilities located in the County's rights-of-way or easements to provide adequate permanent stormwater quality BMPs with new development or significant redevelopment; and

F. WHEREAS, Section 2.9 of the El Paso County Drainage Criteria Manual provides for a developer's promise to maintain a subdivision's drainage facilities in the event the County does not assume such responsibility; and

G. WHEREAS, developers in El Paso County have historically chosen water runoff detention basins as a means to provide adequate drainage and water runoff control in subdivisions, which basins,

while effective, are less expensive for developers to construct than other methods of providing drainage and water runoff control; and

H. WHEREAS, Developer desires to construct for the land use 1 detention basin/stormwater quality BMP ("detention basin/BMP(s)") as the means for providing adequate drainage and stormwater runoff control and to meet requirements of the County's MS4 Permit, and to operate, clean, maintain and repair such detention basin/BMP(s); and

I. WHEREAS, Developer desires to construct the detention basin/BMP(s) on property that is or will be platted as parcel 5301000038, as indicated on the final plat of the subdivision, and as set forth on Exhibit B attached hereto; and

J. WHEREAS, Developer shall be charged with the duties of constructing, operating, maintaining and repairing the detention basin/BMP(s) on the portion of the Property described in Exhibit B; and

K. WHEREAS, it is the County's experience that subdivision developers and property owners historically have not properly cleaned and otherwise not properly maintained and repaired these detention basins/BMPs, and that these detention basins/BMPs, when not so properly cleaned, maintained, and repaired, threaten the public health, safety and welfare; and

L. WHEREAS, the County, in order to protect the public health, safety and welfare, has historically expended valuable and limited public resources to so properly clean, maintain, and repair these detention basins/BMPs when developers and property owners have failed in their responsibilities, and therefore, the County desires the means to recover its costs incurred in the event the burden falls on the County to so clean, maintain and repair the detention basin/BMP(s) serving this land use due to the Developer's failure to meet its obligations to do the same; and

M. WHEREAS, the County conditions approval of this land use on the Developer's promise to so construct the detention basin/BMP(s) and to reimburse the County in the event the burden falls upon the County to so clean, maintain and/or repair the detention basin/BMP(s) serving this Property; and

N. WHEREAS, the County could condition land use approval on the Developer's promise to construct a different and more expensive drainage, water runoff control system and BMPs than those proposed herein, which more expensive system would not create the possibility of the burden of cleaning, maintenance and repair expenses falling on the County; however, the County is willing to forego such right upon the performance of Developer's promises contained herein; and

O. WHEREAS, the County, in order to secure performance of the promises contained herein, conditions approval of this land use upon the Developer's grant herein of a perpetual Easement over a portion of the Property for the purpose of allowing the County to periodically access, inspect, and, when so necessary, to clean, maintain and/or repair the detention basin/BMP(s).

Agreement

NOW, THEREFORE, in consideration of the mutual Promises contained herein, the sufficiency of which are hereby acknowledged, the Parties agree as follows:

1. Incorporation of Recitals: The Parties incorporate the Recitals above into this Agreement.

2. Covenants Running with the Land: Developer agrees that this entire Agreement and the performance thereof shall become a covenant running with the land, which land is legally described in Exhibit A attached hereto, and that this entire Agreement and the performance thereof shall be binding upon itself, its successors and assigns.

3. Construction: Developer shall construct on that portion of the Property described in Exhibit B attached hereto and incorporated herein by this reference, 1 detention basin/BMP(s). Developer shall not commence construction of the detention basin/BMP(s) until the El Paso County Planning and Community Development Services Department (PCD) has approved in writing the plans and specifications for the detention basin/BMP(s) and this Agreement has been signed by all Parties and returned to the PCD. Developer shall complete construction of the detention basin/BMP(s) in substantial compliance with the County-approved plans and specifications for the detention basin/BMP(s). Failure to meet these requirements shall be a material breach of this Agreement and shall entitle the County to pursue any remedies available to it at law or in equity to enforce the same. Construction of the detention basin/BMP(s) shall be substantially completed within one (1) year (defined as 365 days), which one year period will commence to run on the date the approved plat of this Subdivision is recorded in the records of the El Paso County Clerk and Recorder. In cases where a subdivision is not required, the one-year period will commence to run on the date the Erosion and Stormwater Quality Control Permit (ESQCP) is issued. Rough grading of the detention basin/BMP(s) must be completed and inspected by the PCD prior to commencing road construction.

In the event construction is not substantially completed within the one (1) year period, then the County may exercise its discretion to complete the project and shall have the right to seek reimbursement from the Developer and its successors and assigns, for its actual costs and expenses incurred in the process of completing construction. The term actual costs and expenses shall be liberally construed in favor of the County, and shall include, but shall not be limited to, labor costs, tool and equipment costs, supply costs, and engineering and design costs, regardless of whether the County uses its own personnel, tools, equipment and supplies, etc. to correct the matter. In the event the County initiates any litigation or engages the services of legal counsel in order to enforce the provisions arising herein, the County shall be entitled to its damages and costs, including reasonable attorney fees, regardless of whether the County contracts with outside legal counsel or utilizes in-house legal counsel for the same.

4. Maintenance: The Developer agrees, for itself and its successors and assigns, that it will regularly and routinely inspect, clean and maintain the detention basin/BMP(s) in compliance with the County-reviewed Operation and Maintenance Manual, attached hereto as Exhibit C and incorporated herein by reference, and otherwise keep the same in good repair, all at its own cost and expense. No trees or shrubs that will impair the structural integrity of the detention basin/BMP(s) shall be planted or allowed to grow on the detention basin/BMP(s).

5. Creation of Easement: Developer hereby grants the County a non-exclusive perpetual easement upon and across that portion of the Property described in Exhibit B. The purpose of the easement is to allow the County to access, inspect, clean, repair and maintain the detention basin/BMP(s); however, the creation of the easement does not expressly or implicitly impose on the County a duty to so inspect, clean, repair or maintain the detention basin/BMP(s).

6. County's Rights and Obligations: Any time the County determines, in the sole exercise of its discretion, that the detention basin/BMP(s) is not properly cleaned, maintained and/or otherwise kept in good repair, the County shall give reasonable notice to the Developer and its successors and assigns, that the detention basin/BMP(s) needs to be cleaned, maintained and/or otherwise repaired. The notice shall provide a reasonable time to correct the problems. Should the responsible parties fail to correct the specified problems, the County may enter upon the Property to so correct the specified problems. Notice shall be effective to the above by the County's deposit of the same into the regular United States mail, postage pre-paid. Notwithstanding the foregoing, this Agreement does not expressly or implicitly impose on the County a duty to so inspect, clean, repair or maintain the detention basin/BMP(s).

7. Reimbursement of County's Costs / Covenant Running with the Land: The Developer agrees and covenants, for itself, its successors and assigns, that it will reimburse the County for its costs and expenses incurred in the process of completing construction of, cleaning, maintaining, and/or repairing the detention basin/BMP(s) pursuant to the provisions of this Agreement.

The term "actual costs and expenses" shall be liberally construed in favor of the County, and shall include, but shall not be limited to, labor costs, tools and equipment costs, supply costs, and engineering and design costs, regardless of whether the County uses its own personnel, tools, equipment and supplies, etc. to correct the matter. In the event the County initiates any litigation or engages the services of legal counsel in order to enforce the provisions arising herein, the County shall be entitled to its damages and costs, including reasonable attorney's fees, regardless of whether the County contracts with outside legal counsel or utilizes in-house legal counsel for the same.

8. Contingencies of Land Use/Land Disturbance Approval: Developer's execution of this Agreement is a condition of land use/land disturbance approval.

The County shall have the right, in the sole exercise of its discretion, to approve or disapprove any documentation submitted to it under the conditions of this paragraph, including but not limited to, any separate agreement or amendment, if applicable, identifying any specific maintenance responsibilities not addressed herein. The County's rejection of any documentation submitted hereunder shall mean that the appropriate condition of this Agreement has not been fulfilled.

9. Agreement Monitored by El Paso County Planning and Community Development Department and/or El Paso County Department of Public Works: Any and all actions and decisions to be made hereunder by the County shall be made by the Director of the El Paso County Planning and Community Development Department and/or the Director of the El Paso County Department of Public Works. Accordingly, any and all documents, submissions, plan approvals, inspections, etc. shall be submitted to and shall be made by the Director of the Planning and Community Development Department and/or the Director of the El Paso County Department of Public Works.

10. Indemnification and Hold Harmless: Developer agrees, for itself, its successors and assigns, that it will indemnify, defend, and hold the County harmless from any and all loss, costs, damage, injury, liability, claim, lien, demand, action and causes of action whatsoever, whether at law or in equity, arising from or related to its intentional or negligent acts, errors or omissions or that of its agents, officers, servants, employees, invitees and licensees in the construction, operation, inspection, cleaning (including analyzing and disposing of any solid or hazardous wastes as defined by State and/or Federal environmental laws and regulations), maintenance, and repair of the detention basin/BMP(s), and such obligation arising under this paragraph shall be joint and several. Nothing in this paragraph shall be deemed to waive or

otherwise limit the defense available to the County pursuant to the Colorado Governmental Immunity Act, Sections 24-10-101, *et seq*. C.R.S., or as otherwise provided by law.

11. Severability: In the event any Court of competent jurisdiction declares any part of this Agreement to be unenforceable, such declaration shall not affect the enforceability of the remaining parts of this Agreement.

12. Third Parties: This Agreement does not and shall not be deemed to confer upon or grant to any third party any right to claim damages or to bring any lawsuit, action or other proceeding against either the County, the Developer, or their respective successors and assigns, because of any breach hereof or because of any terms, covenants, agreements or conditions contained herein.

13. Solid Waste or Hazardous Materials: Should any refuse from the detention basin/BMP(s) be suspected or identified as solid waste or petroleum products, hazardous substances or hazardous materials (collectively referred to herein as "hazardous materials"), the Developer shall take all necessary and proper steps to characterize the solid waste or hazardous materials and properly dispose of it in accordance with applicable State and/or Federal environmental laws and regulations, including, but not limited to, the following: Solid Wastes Disposal Sites and Facilities Acts, §§ 30-20-100.5 – 30-20-119, C.R.S., Colorado Regulations Pertaining to Solid Waste Disposal Sites and Facilities, 6 C.C.R. 1007-2, *et seq*., Solid Waste Disposal Act, 42 U.S.C. §§ 6901-6992k, and Federal Solid Waste Regulations 40 CFR Ch. I. The County shall not be responsible or liable for identifying, characterizing, cleaning up, or disposing of such solid waste or hazardous materials. Notwithstanding the previous sentence, should any refuse cleaned up and disposed of by the County be determined to be solid waste or hazardous materials, the Developer, but not the County, shall be responsible and liable as the owner, generator, and/or transporter of said solid waste or hazardous materials.

14. Applicable Law and Venue: The laws, rules, and regulations of the State of Colorado and El Paso County shall be applicable in the enforcement, interpretation, and execution of this Agreement, except that Federal law may be applicable regarding solid waste or hazardous materials. Venue shall be in the El Paso County District Court.

IN WITNESS WHEREOF, the Parties affix their signatures below.

Executed this 28 day of September, 2026, by:
HONOR CHARTER BUILDING CORPORATION

By: Robert J. Marzano
Name: Robert J. Marzano, Title: Board President

The foregoing instrument was acknowledged before me this 28th day of September, 2026, by Name: Robert J. Marzano, Title: Board President, HONOR CHARTER BUILDING CORPORATION.

Witness my hand and official seal.
My commission expires: 03/28/2028

CONNOR ANTHONY SHEA
NOTARY PUBLIC
STATE OF COLORADO
NOTARY ID 20244012552
MY COMMISSION EXPIRES MARCH 28, 2028

Connor S
Notary Public

Executed this _____ day of _____, 20___, by:

BOARD OF COUNTY COMMISSIONERS
OF EL PASO COUNTY, COLORADO

By: _____
Christina Prete, P.E., Stormwater Operations & Compliance Manager
Engineering Division, Department of Public Works
Designee of Joshua J. Palmer, P.E., County Engineer
Authorized signatory pursuant to Resolution No. 24-145

The foregoing instrument was acknowledged before me this _____ day of _____, 20___, by _____, Stormwater Operations & Compliance Manager, El Paso County Department of Public Works.

Witness my hand and official seal.

My commission expires: _____

_____
Notary Public

Approved as to Content and Form:

Erika Keech
_____
Assistant County Attorney

EXHIBIT A
Subject Property

LEGAL DESCRIPTION
BEING A PART OF THE SOUTH ONE HALF OF THE NORTHEAST ONE-QUARTER (S 1/2 NE 1/4) OF SECTION 1, TOWNSHIP 13 SOUTH, RANGE 65 WEST OF THE 6TH PRINCIPAL MERIDIAN, COUNTY OF EL PASO, STATE OF COLORADO, MORE FULLY DESCRIBED AS FOLLOWS:
BASIS OF BEARINGS: BEARINGS ARE BASED ON THE WESTERLY BOUNDARY LINE OF SUBJECT PARCEL, COINCIDENT WITH THE EASTERLY LINE OF THE BENT GRASS RESIDENTIAL FILING NO.2 BY RECEPTION NO. 220714559, MONUMENTED ON THE NORTH END WITH A FOUND NO.5 REBAR WITH 1-3/8" RED PLASTIC CAP, "ALC PLS 38087", FLUSH WITH GRADE, AND ON THE SOUTH END WITH A NO.4 REBAR WITH 1" ORANGE PLASTIC CAP MARKED "PLS 38141", RECOVERED 0.6′ BELOW GRADE, SAID LINE TO BEAR NORTH 00°08'14" EAST, A MEASURED DISTANCE OF 619.52 FEET.
COMMENCING AT THE CENTER NORTH 1/16 CORNER, SEC. 1 T.1S. R.65W. BEING A FOUND NUMBER 6 REBAR WITH 3-1/4" ALUMINUM CAP MARKED "N 1/16 S1 2019, PLS 38069", 1.4' ABOVE GRADE; THENCE SOUTH 89°41'32" EAST ALONG THE NORTHERLY BOUNDARY OF THE BENT GRASS RESIDENTIAL FILING NO.2 BY RECEPTION NO. 220714559, COINCIDENT WITH THE SOUTHERLY BOUNDARY OF A PORTION OF WOODMEN HILLS FILING NO. 3 BY RECEPTION NO. 97059838, A DISTANCE OF 28.26 FEET TO A NO.5 REBAR WITH 1-3/8" RED PLASTIC CAP, "ALC PLS 38087", FLUSH WITH GRADE, BEING THE **POINT OF BEGINNING:** OF THE HEREINAFTER DESCRIBED LANDS;
THENCE NORTH 89°54'26" WEST ALONG THE NORTHERLY BOUNDARY OF SUBJECT PARCEL COINCIDENT OF SOUTHERLY BOUNDARY OF A PORTION OF WOODMEN HILLS FILING NO. 3 BY RECEPTION NO. 97059838, A DISTANCE OF 631.24 FEET TO A NO. 5 REBAR WITH A 1-1/4′ PURPLE PLASTIC CAP, PLS 38759, FLUSH WITH GRADE;
THENCE SOUTH 00°09'43" WEST, ALONG THE EASTERLY LINE OF SUBJECT PARCEL, COINCIDENT WITH THE WESTERLY BOUNDARY LINE OF UNPLATTED LANDS PER QUIT CLAIM DEED BY RECEPTION NO. 208133006, A DISTANCE OF 619.92 FEET TO A NO. 5 REBAR WITH A 1-1/4′ PURPLE PLASTIC CAP, PLS 38759, FLUSH WITH GRADE;
THENCE NORTH 89°52'36" WEST ALONG THE SOUTHERLY LINE OF SUBJECT PARCEL, COINCIDENT WITH A PORTION OF THE NORTHERLY RIGHT OF WAY LINE OF GRASS MEADOWS DRIVE, A DISTANCE OF 630.97 FEET TO A NO.4 REBAR WITH 1" ORANGE PLASTIC CAP MARKED "PLS 38141", RECOVERED 0.6′ BELOW GRADE;
THENCE NORTH 00°08'14" EAST, ALONG THE WESTERLY LINE OF SUBJECT PARCEL, COINCIDENT WITH THE EASTERLY LINE OF THE BENT GRASS RESIDENTIAL FILING NO.2 BY RECEPTION NO. 220714559, A MEASURED DISTANCE OF 619.52 FEET TO THE **POINT OF BEGINNING.**
SAID LANDS CONTAINING 391,129 SQUARE FEET (8.98 ACRES) OF LAND, MORE OR LESS.

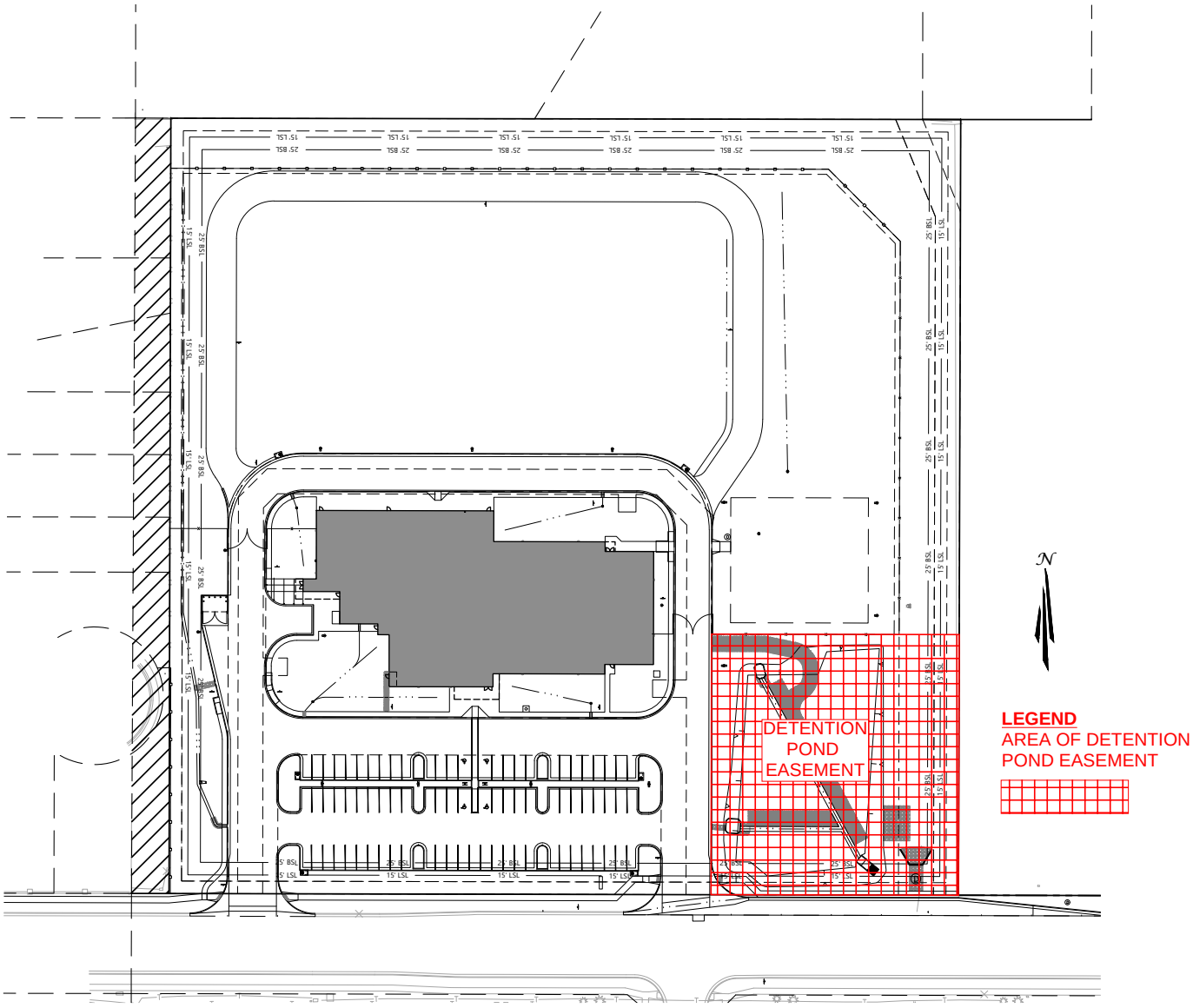
DETENTION
POND
EASEMENT
N
LEGEND
AREA OF DETENTION
POND EASEMENT

EXHIBIT B

EXHIBIT C
PCM O&M MANUAL

EL PASO COUNTY

Standard Operation Procedures
for
Inspection and Maintenance
of
Extended Detention Basin(s)

Honor Charter School

Owner:
Highmark School Development (616) 240-3566

El Paso County Department of Public Works
3275 Akers Drive
Colorado Springs, CO 80922

dotweb@elpasoco.com
719-520-6900

Introduction

This plan addresses operation and maintenance of public detention / water quality facilities 1) constructed as part of the Honor Charter School development project on the North side of Bent Grass Meadows Drive and to the east of the single-family homes at Niebrera Dr. **(EPC PCD projects number: PPR2615). The plat number of Honor Charter School is 14172.**

Background

The State of Colorado Department of Public Health and Environment, Water Quality Control Division (CDPHE), has implemented federal regulations within the State of Colorado through permitting, and has included El Paso County as one of numerous Municipal Separate Storm Sewer Systems (MS4s) required to be permitted in compliance with National Pollutant Discharge Elimination System (NPDES) Phase 2 Regulations, as defined within Colorado's Phase 2 Municipal Guidance.

NPDES Phase 2 MS4s stormwater discharges are covered under a general permit under the Colorado Discharge Permit System (CDPS) under Regulation 61, and as a minimum require the MS4's operator (e.g., El Paso County) to develop, implement, and enforce a stormwater management program to reduce the discharge of pollutants to the maximum extent practicable to protect water quality requirements of the Colorado Water Quality Control Act, Colorado Code of Regulations [CCR] 61.8(11)(a)(i)).

This Stormwater Facilities Operation and Maintenance Plan (O&M Plan) is for public subregional detention facilities Pond 1constructed as part of the development project referenced above.

Associated Agreements

The Development Improvements Agreement (DIA) for the development (recorded at Reception No. TBD) required the developer to complete the Offsite 30-inch Storm Sewer public improvements as itemized in the associated Financial Assurance Estimate (FAE).

Paragraph #1 of the DIA requires the developer to secure collateral for the amount determined in the agreement.

Paragraph #3 of the DIA requires the developer to complete all public improvements described in the FAE.

The SIA and FAE require as-built plans and certification of completion of the detention facilities in general conformance with the approved construction drawings. Prior to final County acceptance of the Pond 1 detention facilities.

The developer has entered into a Stormwater Improvements Maintenance Agreement and Easement with El Paso County that requires Honor Charter School to maintain and operate all drainage facilities for the property.

Funding for and Organization of Facility Operation and Maintenance

Honor Charter Academy will be responsible for operations and maintenance of the 1 detention facility and north and south drainage channel upon acceptance of the facilities.

Site and Facilities Description

The proposed EDB is in the southeast corner of the lot at 8250 Bent Grass Meadows in Falcon, CO. The pond can be accessed from the west by the proposed parking lot drive aisle. The proposed EDB overflows at the southeast corner, into an adjacent private swale, and then that overflows across proposed sidewalk into County ROW. From there, flow is directed east towards Meridian Road through a public storm system.

A grass lined swale along the north and south edge of the property acts as a separate, self-treating pervious area. It outlets via a 30" public storm drain to the south, and then from there east

to the swale along Meridian Road. Overflow from this swale overtops the sidewalk and enters Bent Grass Meadows Drive, where it is conveyed east to the swale along Meridian Road

Extended Detention Basin (EDB) Description

The subsections below describe general EDB operations and maintenance.

EDB-1 GENERAL EDB CONCEPT

Extended Detention Basins (EDBs) are one of the most common types of permanent stormwater control measures utilized within the Front Range of Colorado. An EDB is a sedimentation basin designed to "extend" the runoff detention time, but to drain completely sometime after stormwater runoff ends. An EDB's drain time for the water quality portion of the facility is typically 40 hours. The basins are considered to be "dry" because the majority of the basin is designed not to have a significant permanent pool of water remaining between runoff events.

EDBs are an adaptation of a detention basin used for flood control, with the primary difference being the addition of forebays, micropools and a slow release outlet design. Forebays are shallow concrete "pans" located at the inflow points to the basin and are provided to facilitate sediment removal within a contained area prior to releasing into the pond. The forebays collect and briefly hold stormwater runoff resulting in a process called sedimentation, dropping sediment out of the stormwater. The stormwater is then routed from the forebay into the concrete trickle channel and upper basin, the large grassy portion of the basin. The EDB includes an outlet structure that extends the drain time of frequently occurring runoff events to facilitate pollutant removal. An EDB also includes a small micropool just upstream of the outlet structure or built into the outlet structure. The micropool is designed to hold a small amount of water to keep sediment and floatables from blocking the outlet orifices.

EDB-2 INSPECTING EXTENDED DETENTION BASINS (EDBs)

EDB-2.1 Access and Easements

Inspection and maintenance personnel may utilize the attached stormwater facility map containing the location(s) of the access points and maintenance easements of the EDB(s) within this development.

EDB-2.2 Stormwater Management Facilities Locations

Inspection and maintenance personnel may utilize the attached stormwater facility map located in containing the location(s) of the EDB(s) within this development.

EDB-2.3 Extended Detention Basin (EDB) Features

EDBs have a number of features that are designed to serve a particular function. Many times the proper function of one feature depends on another. For example, if a forebay is not properly maintained, it could negatively affect the performance of a downstream feature (trickle channel, micropool, etc.).

Therefore, it is critical that each feature of the EDB is properly inspected and maintained to ensure that the overall facility functions as it was intended. Below is a list and description of the most common features within an EDB and the corresponding maintenance inspection items that can be anticipated:

Table EDB-1: Typical Inspection & Maintenance Requirements Matrix

EDB Features	Sediment Removal	Mowing/ Weed Control	Trash & Debris Removal	Erosion	Over-grown Vegetation Removal	Standing Water (mosquito/ algae control)	Structure Repair
Inflow Points (outfalls)	X		X	X			X
Forebays	X		X				X
Low-Flow Channel	X		X	X	X		X
Bottom Stage	X	X	X	X	X	X	
Micropool	X		X		X	X	X
Outlet Works	X		X				X
Emergency Spillway			X	X	X		X
Upper Stage			X	X			
Embankment		X		X	X		

EDB-2.3.1 Inflow Points

Inflow Points or Outfalls into EDBs are the point source of the stormwater discharge into the facility. An inflow point is commonly a storm sewer pipe with a flared end section that discharges into the EDB. In some instances, an inflow point could be a drainage channel or ditch that flows into the facility.

An energy dissipater (riprap or hard armor protection) is typically immediately downstream of the discharge point into the EDB to protect from erosion. In some cases, the storm sewer outfall can have a toe- wall or cut-off wall immediately below the structure to prevent undercutting of the outfall from erosion.

The typical maintenance items that are found with inflow points are as follows:

a. Riprap Displaced – Many times, because the repeated impact/force of water, the riprap can shift and settle. If any portion of the riprap apron appears to have settled, soil is present between the riprap, or the riprap has shifted, maintenance may be required to ensure future erosion is prevented.

b. Erosion Present/Outfall Undercut – In some situations, the energy dissipater may not have been sized, constructed, or maintained appropriately and erosion has occurred. Any erosion within the vicinity of the inflow point will require maintenance to prevent damage to the structure(s) and sediment transport within the facility.

c. Sediment Accumulation – Because of the turbulence in the water created by the energy dissipater, sediment often deposits immediately downstream of the inflow point. To prevent a loss in hydraulic performance of the upstream infrastructure, sediment that accumulates in this area must be removed in a timely manner.

d. Structural Damage – Structural damage can occur at any time during the life of the facility. Typically, for an inflow, the structural damage occurs to the pipe flared end section (concrete or steel). Structural damage can lead to additional operating problems with the facility, including loss of hydraulic performance.

e. Woody Growth/Weeds Present – Undesirable vegetation can grow in and around

the inflow area to an EDB that can significantly affect the performance of the drainage facilities discharging into the facility. This type of vegetation includes trees (typically cottonwoods) and dense areas of shrubs (willows). If woody vegetation is not routinely mowed/removed, the growth can cause debris/sediment to accumulate, resulting in blockage of the discharge. Also, tree roots can cause damage to the structural components of the inflow. Routine maintenance is essential for trees (removing a small tree/sapling is much cheaper and "quieter" than a mature tree). In addition, noxious weeds growing in the facility can result in the loss of desirable native vegetation and impact adjacent open spaces/land.

EDB-2.3.2 Forebay

A forebay is a solid surface (pad), typically constructed of concrete, immediately downstream of the inflow point. The forebay is designed to capture larger particles and trash to prevent them from entering the main portion of the EDB. The solid surface is designed to facilitate mechanical sediment removal (via a skid steer or shovel). The forebay typically includes a small diameter discharge pipe or weir on the downstream end, which is designed to drain the forebay in a specified period of time to promote sedimentation. Forebays vary in size and depth depending on the design and site constraints.

The typical maintenance items that are found with forebays are as follows:

a. Sediment/Debris Accumulation – Because this feature of the EDB is designed to provide the initial sedimentation, debris and sediment frequently accumulate in this area. If the sediment and debris is not removed from the forebay on a regular basis, it can significantly affect the function of other features within the EDB. Routine sediment removal from the forebay can significantly reduce the need for dredging of the main portion of the EDB using specialized equipment (long reach excavators). Routine removal of sediment from the forebay can substantially decrease the long-term sediment removal costs of an EDB.

b. Concrete Cracking/Failing – The forebay is primarily constructed of concrete, which cracks, spalls, and settles. Damage to the forebay can result in deceased performance and impact maintenance efforts.

c. Drain Pipe/Weir Clogged – Many times the drainpipe or weir can be clogged with debris, and prevent the forebay from draining properly. If standing water is present in the forebay (and there is not a base flow), the forebay is most likely not draining properly. This can result in a decrease in performance and create potential nuisances with stagnant water (mosquitoes).

d. Weir/Drain Pipe Damaged – Routine maintenance activities, vandalism, or age may cause the weir or drain pipe in the forebay to become damaged. Weirs are typically constructed of concrete, which cracks and spalls. The drainpipe is typically constructed with plastic, which can fracture.

EDB-2.3.3 Trickle Channel (Low-Flow)

The trickle channel conveys stormwater from the forebay to the micro- pool of the EDB. The trickle channel is typically made of concrete.

However, grass lined (riprap sides protected) is also common and can provide for an additional means of water quality within the EDB. The trickle channel is typically 6-9 inches in depth and can vary in width.

The typical maintenance items that are found with trickle channels are as follows:

a. Sediment/Debris Accumulation – Trickle channels are typically designed with a relatively flat slope that can promote sedimentation and the collection of debris. Also, if a trickle channel is grass lined it can accumulate sediment and debris at a much quicker rate. Routine removal of accumulated sediment and debris is essential in preventing flows from circumventing the trickle channel and affecting the dry storage portion of the pond.

b. Concrete/Riprap Damage – Concrete can crack, spall, and settle and must be repaired to ensure proper function of the trickle channel. Riprap can also shift over time and must be replaced/repaired as necessary.

c. Woody Growth/Weeds Present – Because of the constant moisture in the area surrounding the trickle channel, woody growth (cottonwoods/willows) can become a problem. Trees and dense shrub type vegetation can affect the capacity of the trickle channel and can allow flows to circumvent the feature.

d. Erosion Outside of Channel – In larger precipitation events, the trickle channel capacity will likely be exceeded. This can result in erosion immediately adjacent to the trickle channel and must be repaired to prevent further damage to the structural components of the EDB.

EDB-2.3.4 Bottom Stage (Initial Surcharge)

The bottom stage is at least 4 inches deeper than the upper stage and is located directly in front of the outlet works structure, and typically above the permanent water surface of the micropool and the invert of the trickle channel. The bottom stage is designed to store the smaller runoff events, assists in keeping the majority of the basin bottom dry resulting in easier maintenance operations, and enhances the facility's pollutant removal capabilities. This area of the EDB may develop wetland vegetation.

The typical maintenance items that are found with the bottom stage are as follows:

a. Sediment/Debris Accumulation – The micropool can frequently accumulate sediment and debris. This material must be removed to maintain pond volume and proper function of the outlet structure.

b. Woody Growth/Weeds Present – Because of the constant moisture in the soil surrounding the micropool, woody growth (cottonwoods/willows) can create operational problems for the EDB. If woody vegetation is not routinely mowed/removed, the growth can cause debris/sediment to accumulate outside of the micropool, which can cause problems with other EDB features. Also, tree roots can cause damage to the structural components of the outlet works. Routine management is essential for trees (removing a small tree/sapling is much cheaper and less disruptive than removing a mature tree).

c. Bank Erosion – The micropool is usually a couple feet deeper than the other areas of the ponds. Erosion can be caused by water dropping into the micropool if

adequate protection/armor is not present. Erosion in this area must be mitigated to prevent sediment transport and other EDB feature damage.

d. Mosquitoes/Algae Treatment – Nuisance created by stagnant water can result from improper maintenance/treatment of the micropool. Mosquito larvae can be laid by adult mosquitoes within the permanent pool. Also, aquatic vegetation that grows in shallow pools of water can decompose causing foul odors. Chemical/mechanical treatment of the micropool may be necessary to reduce these impacts to adjacent homeowners.

e. Petroleum/Chemical Sheen – Many indicators of illicit discharges into the storm sewer systems will be present in the micropool area of the EDB. These indicators can include sheens, odors, discolored soil, and dead vegetation. If it is suspected that an illicit discharge has occurred, contact County Stormwater immediately. Proper removal/mitigation of contaminated soils and water in the EDB is necessary to minimize any environmental impacts downstream.

EDB-2.3.5 Micropool

The micropool is a concrete or grouted boulder walled structure directly in front of the outlet works. At a minimum, the micropool is 2.5 feet deep and is designed to hold water. The micropool is critical in the proper function of the EDB; it allows suspended sediment to be deposited at the bottom of the micropool and prevents these sediments from being deposited in front of the outlet works causing clogging of the outlet structure, which results in marshy areas within the top and bottom stages.

The typical maintenance items that are found with micropools are as follows:

a. Sediment/Debris Accumulation – The micropool can frequently accumulate sediment and debris. This material must be removed to maintain pond volume and proper function of the outlet structure.

b. Woody Growth/Weeds Present – Because of the constant moisture in the soil surrounding the micropool, woody growth (cottonwoods/willows) can create operational problems for the EDB. If woody vegetation is not routinely mowed/removed, the growth can cause debris/sediment to accumulate outside of the micropool, which can cause problems with other EDB features. Also, tree roots can cause damage to the structural components of the outlet works. Routine management is essential for trees (removing a small tree/sapling is much cheaper and less disruptive than removing a mature tree).

c. Mosquitoes/Algae Treatment – Nuisance created by stagnant water can result from improper maintenance/treatment of the micropool. Mosquito larvae can be laid by adult mosquitoes within the permanent pool. Also, aquatic vegetation that grows in shallow pools of water can decompose causing foul odors. Chemical/mechanical treatment of the micropool may be necessary to reduce these impacts to adjacent homeowners.

d. Petroleum/Chemical Sheen – Many indicators of illicit discharges into the storm sewer systems will be present in the micropool area of the EDB. These indicators can include sheens, odors, discolored soil, and dead vegetation. If it is suspected that an illicit discharge has occurred, contact the supervisor immediately. Proper removal of contaminated soils and water in the EDB is necessary to minimize any environmental impacts downstream.

EDB-2.3.6 Outlet Works

The outlet works is the feature that drains the EDB in specified release rates and periods of time. The outlet works is typically constructed of reinforced concrete into the embankment of the EDB. The concrete structure typically has steel orifice plates anchored/embedded into it to control stormwater release rates. The larger openings for flood control on the outlet structure typically have trash racks over them to prevent clogging. The water quality orifice plate with small diameter holes will typically have a well screen covering it to prevent smaller materials from clogging it. The outlet structure is the single-most important feature in the EDB operation. Proper inspection and maintenance of the outlet works is essential in ensuring the long-term operation of the EDB.

The typical maintenance items that are found with the outlet works are as follows:

a. Trash Rack/Well Screen Clogged – Floatable material that enters the EDB will most likely make its way to the outlet structure. This material is trapped against the trash racks and well screens on the outlet structure (which is why they are there). This material must be removed on a routine basis to ensure the outlet structure drains in the specified design period.

b. Structural Damage – The outlet structure is primarily constructed of concrete, which can crack, spall, and settle. The steel trash racks and well screens are also susceptible to damage.

c. Orifice Plate Missing/Not Secure – Many times residents, property owners, or maintenance personnel will remove or loosen orifice plates if they believe the pond is not draining properly. Any modification to the orifice plate(s) will significantly affect the designed discharge rates for water quality and/or flood control. Modification of the orifice plates is not allowed without EPC approval.

d. Manhole Access – Access to the outlet structure is necessary to properly inspect and maintain the facility. If access is difficult or not available to inspect the structure, chances are it will be difficult to maintain as well.

e. Woody Growth/Weeds Present – Because of the constant moisture in the soil surrounding the outlet works, woody growth (cottonwoods/willows) can create operational problems for the EDB. If woody vegetation is not routinely mowed/removed, the growth can cause debris/sediment to accumulate around the outlet works, which can cause problems with other EDB features. Also, tree roots can cause damage to the structural components of the outlet works. Routine management is essential for trees (removing a small tree/sapling is much cheaper and less disruptive than removing a mature tree).

EDB-2.3.7 Emergency Spillway

An emergency spillway is typical of all EDBs and designed to serve as the overflow in the event the volume of the pond is exceeded. The emergency spillway is typically armored with riprap (or other hard armor) and is sometimes buried with soil. The emergency spillway is typically a weir (notch) in the pond embankment. Proper function of the emergency spillway is essential to ensure flooding does not affect adjacent properties.

The typical maintenance items that are found with emergency spillways are as follows:

a. Riprap Displaced – As mentioned before, the emergency spillway is typically armored with riprap to provide erosion protection. Over the life of an EDB, the riprap may shift or dislodge due to flow.

b. Erosion Present – Although the spillway is typically armored, stormwater flowing through the spillway can cause erosion damage. Erosion must be repaired to ensure the integrity of the basin embankment, and proper function of the spillway.

c. Woody Growth/Weeds Present – Management of woody vegetation is essential in the proper long-term function of the spillway. Larger trees or dense shrubs can capture larger debris entering the EDB and reduce the capacity of the spillway.

d. Obstruction Debris – The spillway must be cleared of any obstruction (man-made or natural) to ensure the proper design capacity.

EDB-2.3.8 Upper Stage (Dry Storage)

The upper stage of the EDB provides the majority of the water quality flood detention volume. This area of the EDB is higher than the micro- pool and typically stays dry, except during storm events. The upper stage is the largest feature/area of the basin. Sometimes, the upper stage can be utilized for park space and other uses in larger EDBs.

With proper maintenance of the micropool and forebay(s), the upper stage should not experience much sedimentation; however, bottom elevations should be monitored to ensure adequate volume.

The typical maintenance items that are found with upper stages are as follows:

a. Vegetation Sparse – The upper basin is the most visible part of the EDB, and therefore aesthetics is important. Adequate and properly maintained vegetation can greatly increase the overall appearance and acceptance of the EDB by the public. In addition, vegetation can reduce the potential for erosion and subsequent sediment transport to the other areas of the pond.

b. Woody Growth/Undesirable Vegetation – Although some trees and woody vegetation may be acceptable in the upper basin, some thinning of cottonwoods and willows may be necessary. Remember, the basin will have to be dredged to ensure volume, and large trees and shrubs will be difficult to protect during that operation.

c. Standing Water/Boggy Areas – Standing water or boggy areas in the upper stage is typically a sign that some other feature in the pond is not functioning properly. Routine maintenance (mowing, trash removal, etc.) can be extremely difficult for the upper stage if the ground is saturated. If this inspection item is checked, make sure you have identified the root cause of the problem.

d. Sediment Accumulation – Although other features within the EDB are designed to capture sediment, the upper storage area will collect sediment over time. Excessive amounts of sedimentation will result in a loss of storage volume. It may be more difficult to determine if this area has accumulated sediment without conducting a field survey.

Below is a list of indicators:

1. Ground adjacent to the trickle channel appears to be several inches higher than concrete/riprap
2. Standing water or boggy areas in upper stage
3. Uneven grades or mounds
4. Micropool or Forebay has excessive amounts of sediment

e. Erosion (banks and bottom) – The bottom grades of the dry storage are typically flat enough that erosion should not occur. However, inadequate vegetative cover may result in erosion of the upper stage. Erosion that occurs in the upper stage can result in increased dredging/maintenance of the micropool.

f. Trash/Debris – Trash and debris can accumulate in the upper area after large events, or from illegal dumping. Over time, this material can accumulate and clog the EDB outlet works.

g. Maintenance Access – Most EDBs typically have a gravel/concrete maintenance access path to either the upper stage, outlet works, and/or forebay. This access path should be inspected to ensure the surface is still drivable. Some of the smaller EDBs may not have maintenance access paths; however, the inspector should verify that access is available from adjacent properties. The proposed EDB on this project has a 12-foot wide access road at or less than 5% cross-slope and 10% longitudinal slope. The attached specifications sheet at the end of this Manual would resemble the type of maintenance equipment that would access this pond for maintenance. In addition, any regular sized truck (typically around ~8 feet in width) would be capable of using the access road. The 12-foot road width and grades provided on plans will be sufficient for the maintenance anticipated for this site. The equipment would likely be pulled close to the forebays and outlet structures with most of the internal work being completed by hand to protect the concrete infrastructure.

EDB-2.3.9 Miscellaneous

There are a variety of inspection/maintenance issues that may not be attributed to a single feature within the EDB. This category on the inspection form is for maintenance items that are commonly found in the EDB but may not be attributed to an individual feature.

a. Encroachment in Easement Area – Private lots/property can sometimes be located very close to the EDBs, even though they are required to be located in tracts with drainage easements. Property owners may place landscaping, trash, fencing, or other items within the easement area that may affect maintenance or the operation of the facility.

b. Graffiti/Vandalism – Damage to the EDB infrastructure can be caused by vandals. If criminal mischief is evident, the inspector should forward this information to the local Sheriff's Office.

c. Public Hazards – Public hazards include items such as vertical drops of greater than 4-feet, containers of unknown/suspicious substances, exposed metal/jagged concrete on structures. If any hazard is found within the facility area that poses an immediate threat to public safety, contact the Sheriff at 911 immediately!

d. Burrowing Animals/Pests – Prairie dogs and other burrowing rodents may cause damage to the EDB features and negatively affect the vegetation within the EDB. Consult EPC Environmental Division if this becomes an issue.

e. Other – Any miscellaneous inspection/maintenance items not contained on the form should be entered here.

EDB-3 MAINTAINING EXTENDED DETENTION BASINS (EDBS)

EDB-3.1 Maintenance Personnel

Maintenance personnel must be qualified to properly maintain EDBs. Inadequately trained personnel can cause additional problems resulting in additional maintenance costs.

EDB-3.2 Equipment

It is imperative that the appropriate equipment and tools are taken to the field with the operations crew. The types of equipment/tools will vary depending on the task at hand. Below is a list of tools, equipment, and material(s) that may be necessary to perform maintenance on an EDB:

1.) Loppers/Tree Trimming Tools
2.) Mowing Tractors

3.) Trimmers (extra string)
4.) Shovels
5.) Rakes
6.) All Surface Vehicle (ASVs)
7.) Skid Steer
8.) Backhoe
9.) Track Hoe/Long Reach Excavator
10.) Dump Truck
11.) Jet-Vac Machine
12.) Engineers Level (laser)
13.) Riprap (Minimum - Type M)
14.) Filter Fabric
15.) Erosion Control Blanket(s)
16.) Seed Mix (Native)
17.) Illicit Discharge Cleanup Kits
18.) Trash Bags
19.) Tools (wrenches, screw drivers, hammers, etc.)
20.) Chain Saw
21.) Confined Space Entry Equipment
22.) Approved Stormwater Facility Operation and Maintenance Manual

Some of the items identified above may not be needed for every maintenance operation. However, this equipment should be available to the maintenance operations crews should the need arise.

EDB-3.3 Safety

Vertical drops may be encountered in areas located within and around the facility. Avoid walking on top of retaining walls or other structures that have a significant vertical drop. If a vertical drop is identified within the EDB that is greater than 48” in height, make the appropriate note/comment on the maintenance inspection form.

EDB-3.4 Maintenance Categories and Activities

A typical EDB Maintenance Program will consist of three broad categories of work: routine, minor, and major maintenance activities. Within each category of work, a variety of maintenance activities can be performed on an EDB. A maintenance activity can be specific to each feature within the EDB, or general to the overall facility. A variety of maintenance activities are typical of EDBs. The maintenance activities range in magnitude from routine trash pickup to the reconstruction of drainage infrastructure. The following three sub-sections (3.5, 3.6, and 3.7) explain each of the categories and briefly describes the typical maintenance activities for an EDB, including the objectives and frequency of actions.

EDB-3.5 Routine Maintenance Activities

The majority of this work consists of regularly scheduled mowing and trash and debris pickups for stormwater management facilities during the growing season. This includes items such as the removal of debris/material that may be clogging the outlet structure well screens and trash racks. It also includes activities such as weed control, mosquito treatment, and algae treatment. These activities will normally be performed numerous times during the year. These items can be completed without any prior correspondence with the EPC Stormwater; however, completed

inspection and maintenance forms shall be retained for each inspection and maintenance activity.

The Maintenance Activities are summarized below, and further described in the following sub-sections.

TABLE – EDB-2 Summary of Routine Maintenance Activities

MAINTENANCE ACTIVITY	MINIMUM FREQUENCY	LOOK FOR	MAINTENANCE ACTION
Mowing	Twice annually	Excessive grass height/aesthetics	Mow grass to a height of 4” to 6”
Trash/Debris Removal	Twice annually	Trash & debris in EDB	Remove and dispose of trash and debris
Outlet Works Cleaning	As needed – after significant rain events – twice annually at a minimum	Clogged outlet structure; ponding water	Remove and dispose of debris/trash/sediment to allow outlet to function properly
Weed control	Minimum twice annually	Noxious weeds; Unwanted vegetation	Treat w/ herbicide or hand pull; Consult the local weed specialist
Mosquito Treatment	As needed	Standing water/ mosquito habitat	Treat w/ EPA approved chemicals
Algae Treatment	As needed	Standing water/ Algal growth/green color	Treat w/ EPA approved chemicals

EDB-3.5.1 Mowing

Occasional mowing is necessary to limit unwanted vegetation and to improve the overall appearance of the EDB. Native vegetation should be mowed to a height of 4-to-6 inches tall. Grass clippings should be collected and disposed of properly.

Frequency – Routine - Minimum of twice annually or depending on aesthetics.

EDB-3.5.2 Trash/Debris Removal

Trash and debris must be removed from the entire EDB area to minimize outlet clogging and to improve aesthetics. This activity must be performed prior to mowing operations.

Frequency – Routine – Prior to mowing operations and minimum of twice annually.

EDB-3.5.3 Outlet Works Cleaning

Debris and other materials can clog the outlet work’s well screen, orifice plate(s), and trash rack. This activity must be performed anytime other maintenance activities are conducted to ensure proper operation.

Frequency - Routine – After significant rainfall event or concurrently with other maintenance activities.

EDB-3.5.4 Weed Control

Noxious weeds and other unwanted vegetation must be treated as needed throughout the EDB. This activity can be performed either through mechanical means (mowing/pulling) or with herbicide. Consultation with the Environmental Division at 719-520-7878 is highly recommended prior to the use of herbicide.

Frequency – Routine – As needed based on inspections.

EDB-3.5.5 Mosquito/Algae Treatment

Treatment of permanent pools is necessary to control mosquitoes and undesirable aquatic vegetation that can create nuisances. Only EPA approved chemicals/materials can be used in areas that are warranted.

Frequency – As needed.

EDB- 3.6 Minor Maintenance Activities

This work consists of a variety of isolated or small-scale maintenance or operational problems. Most of this work can be completed by a small crew, tools, and small equipment. These items may require prior correspondence with EPC Stormwater and require completed inspection and maintenance forms to be submitted to EPC upon request for each inspection and maintenance activity.

Table – EDB-3 Summary of Minor Maintenance Activities

MAINTENANCE ACTIVITY	MINIMUM FREQUENCY	LOOK FOR	MAINTENANCE ACTION
Sediment Removal	As needed; typically every 1–2 years	Sediment build-up; decrease in pond volume	Remove and dispose of sediment
Erosion Repair	As needed, based upon inspection	Rills/gullies forming on side slopes, trickle channel, other areas	Repair eroded areas Revegetate; address source of erosion
Vegetation Removal/Tree Thinning	As needed, based upon inspection	Large trees/wood vegetation in lower stage of pond	Remove vegetation; restore grade and surface
Drain Cleaning/Jet Vac	As needed,based upon inspection	Sediment build-up/ non draining system	Clean drains; Jet Vac if needed

EDB-3.6.1 Sediment Removal

Sediment removal is necessary to maintain the original design volume of the EDB and to ensure proper function of the infrastructure. Regular sediment removal (minor) from the forebay, inflow(s), and trickle channel can significantly reduce the frequency of major sediment removal activities (dredging) in the upper and lower stages. The minor sediment removal activities can typically be addressed with shovels and smaller equipment. Major sediment removal activities will require larger and more specialized equipment. The major sediment activities will also require surveying with an engineer's level, and consultation with EPC Stormwater Staff to ensure design volumes/grades are achieved.

Stormwater sediments removed from EDBs do not meet the criteria of "hazardous waste". However, these sediments are contaminated with a wide array of organic and inorganic pollutants and handling must be done with care. Sediments from permanent pools must be carefully removed to minimize turbidity, further sedimentation, or other adverse water quality impacts. Sediments should be transported by motor vehicle only after they are dewatered. All sediments must be taken to a landfill for proper disposal. Prompt and thorough cleanup is important should a spill occur during transportation.

Frequency – Nonroutine – As necessary based upon inspections. Sediment removal in the

forebay and trickle channel may be necessary as frequently as every 1-2 years.

EDB-3.6.2 Erosion Repair

The repair of eroded areas is necessary to ensure the proper function of the EDB, minimize sediment transport, and to reduce potential impacts to other features. Erosion can vary in magnitude from minor repairs to trickle channels, energy dissipaters, and rilling to major gullies in the embankments and spillways. The repair of eroded areas may require the use of excavators, earthmoving equipment, riprap, concrete, erosion control blankets, and turf reinforcement mats. Major erosion repair to the pond embankments, spillways, and adjacent to structures will require consultation with EPC Stormwater Staff.

Frequency – Nonroutine – As necessary based upon inspections.

EDB-3.6.3 Vegetation Removal/Tree Thinning

Dense stands of woody vegetation (willows, shrubs, etc) or trees can create maintenance problems for the infrastructure within an EDB. Tree roots can damage structures and invade pipes/channels thereby blocking flows. Also, trees growing in the upper and lower stages of the EDB will most likely have to be removed when sediment/dredging operations occur. A small tree is easier to remove than a large tree, therefore, regular removal/thinning is preferred. All trees and woody vegetation that is growing in the bottom of the EDB or near structures (inflows, trickle channels, outlet works, emergency spillways, etc) should be removed. Any trees or woody vegetation in the EDB should be limited to the upper portions of the pond banks.

Frequency – Nonroutine – As necessary based upon inspections.

EDB-3.6.4 Clearing Drains/Jet-Vac

An EDB contains many structures, openings, and pipes that can be frequently clogged with debris. These blockages can result in a decrease of hydraulic capacity and create standing water in areas outside of the micropool. Often the blockage to this infrastructure can be difficult to access and/or clean. Specialized equipment (jet-vac machines) may be necessary to clear debris from these difficult areas.

Frequency – Nonroutine – As necessary based upon inspections.

EDB-3.7 Major Maintenance Activities

This work consists of larger maintenance/operational problems and failures within the stormwater management facilities. All of this work requires consultation with EPC Stormwater Staff to ensure the proper maintenance is performed. This work requires that the staff review the original design and construction drawings to assess the situation and assign the necessary maintenance. **An ESQCP permit may be required for major maintenance activities.** This work may also require more specialized maintenance equipment, design/details, surveying, or assistance through private contractors and consultants.

Table – EDB-4 Summary of Major Maintenance Activities

MAINTENANCE ACTIVITY	MINIMUM FREQUENCY	LOOK FOR	MAINTENANCE ACTION
Major Sediment Removal	As needed – based upon scheduled inspections	Large quantities of sediment; reduced pond capacity	Remove and dispose of sediment. Repair vegetation as needed
Major Erosion Repair	As needed – based upon scheduled inspections	Severe erosion including gullies, excessive soil displacement, areas of settlement, holes	Repair erosion – find cause of problem and address to avoid future erosion
Structural Repair	As needed – based upon scheduled inspections	Deterioration and/or damage to structural components – broken concrete, damaged pipes, outlet works	Structural repair to restore the structure to its original design

EDB-3.7.1 Major Sediment Removal

Major sediment removal consists of removal of large quantities of sediment or removal of sediment from vegetated areas. Care shall be given when removing large quantities of sediment and sediment deposited in vegetated areas. Large quantities of sediment need to be carefully removed, transported and disposed of. Vegetated areas need special care to ensure design volumes and grades are preserved.

Frequency – Nonroutine – Repair as needed based upon inspections.

EDB-3.7.2 Major Erosion Repair

Major erosion repair consists of filling and revegetating areas of severe erosion. Determining the cause of the erosion as well as correcting the condition that caused the erosion should also be part of the erosion repair. Care should be given to ensure design grades and volumes are preserved.

Frequency – Nonroutine – Repair as needed based upon inspections.

EDB-3.7.3 Structural Repair

An EDB includes a variety of structures that can deteriorate or be damaged during the course of routine maintenance. These structures are constructed of steel and concrete that can degrade or be damaged and may need to be repaired or re-constructed from time to time.

These structures include items like outlet works, trickle channels, forebays, inflows, and other features. In-house operations staff can perform some of the minor structural repairs. Major repairs to structures may require input from a structural engineer and specialized contractors. Consultation with EPC Stormwater Staff should take place prior to all structural repairs.

Frequency – Nonroutine – Repair as needed based upon inspections.

Reference:

This manual is adapted from SEMSWA and the Town of Parker, Colorado, *STORMWATER PERMANENT BEST MANAGEMENT PRACTICES (PBMP) LONG-TERM OPERATION AND MAINTENANCE MANUAL*, October 2004

For additional resources and contact info, visit the EPC Stormwater website:
https://publicworks.elpasoco.com/stormwater/

SPECIFICATIONS

Model				SSV65	SSV75
Type of operator station				Open CAB / Closed CAB	Open CAB / Closed CAB
Engine	Model			V2607-CR-TE4	V3307-CR-TE4
	Emission certification			Tier 4	Tier 4
	Gross HP (SAE J1995)		HP (kW)/rpm	64.0 (47.7) / 2700	74.3 (55.4) / 2600
	Net HP (SAE J1349)		HP (kW)/rpm	61.3 (45.7) / 2700	71.6 (53.4) / 2600
	Displacement		cu.in. (cc)	159.7 (2615)	203.3 (3331)
	Cylinders			4	4
	Bore Stroke		in.(mm)	3.5 (87) × 4.4 (110)	3.8 (94) × 4.8 (120)
	Aspiration			Turbocharged	Turbocharged
Loader performance	Rated operating capacity-50% tipping load		lbs. (kg)	1950 (885)	2690 (1220)
	Tipping load		lbs. (kg)	3900 (1770)	5380 (2440)
	Breakout force	Bucket	lbf. (kgf)	4839 (2195)	5884 (2669)
		Lift arm	lbf. (kgf)	3858 (1750)	4850 (2200)
	Lift arm path			Vertical	Vertical
Power train	Standard tire size			10-16.5-8PR	12-16.5-10PR
	Chain size ASA#			80	100
	Travel speed	Low	mph (km/h)	6.9 (11.1)	7.4 (11.9)
		High	mph (km/h)	11.1 (17.8)	11.8 (19.0)
	Traction force		lbf. (kgf)	7339 (3329)	8494 (3853)
	Ground clearance		in. (mm)	7.6 (193)	8.1 (207)
Hydraulic system	Loader hydraulic flow		gpm (ℓ/min.)	18.0 (68.0)	20.9 (79.0)
	Loader hydraulic pressure		psi (kgf/cm²)	3271 (230)	3271 (230)
	Aux. hydraulic flow	Standard	gpm (ℓ/min.)	18.0 (68.0)	20.9 (79.0)
		High	gpm (ℓ/min.)	28.0 (106.0)	30.4 (115.0)
Service refill capacities	Hydraulic tank		gal. (ℓ)	4.2 (16.0)	4.2 (16.0)
	Fuel tank		gal. (ℓ)	25.4 (96.0)	26.9 (102.0)
Operating weight (Include operator weight 175 lbs.)			lbs. (kg)	6790 (3080) / 7055 (3200)	8157 (3700) / 8422 (3820)

The company reserves the right to change the above specifications without notice. This brochure is for descriptive purposes only. Please contact your local Kubota dealer for warranty infomation. For your safety, Kubota strongly recommends the use of a Rollover Protective structure (ROPS) and seat belt in almost all applications.

DIMENSIONS
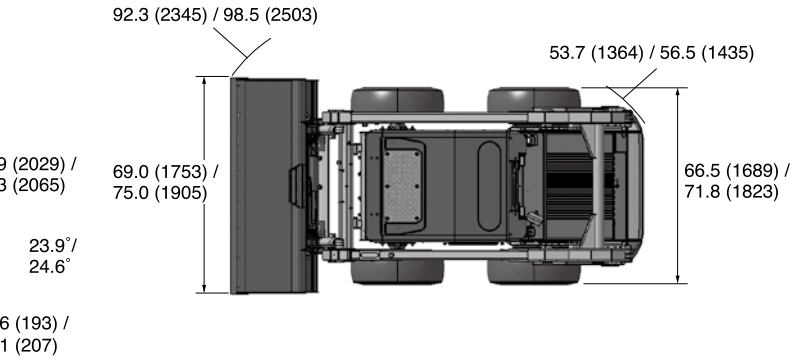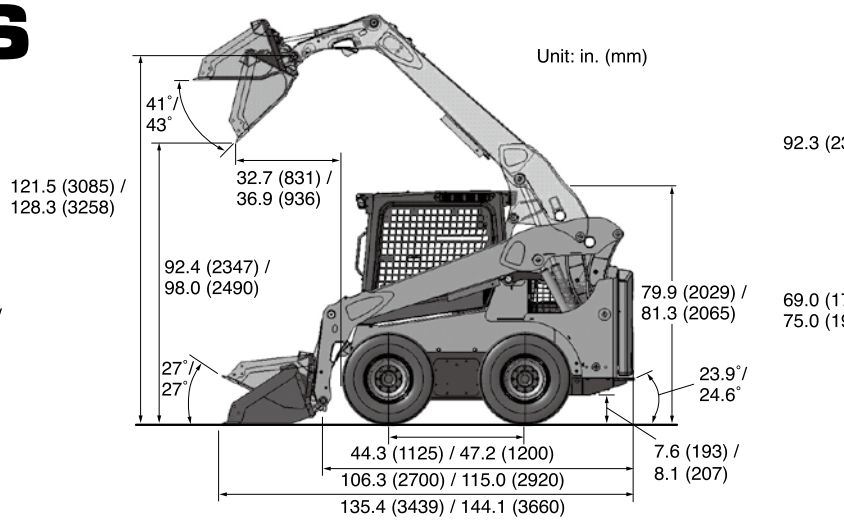
SSV65 / SSV75