FINAL DRAINAGE REPORT
FOR
RETREAT AT TIMBERRIDGE
FILING NO. 3

CCES
Responses

Prepared for:
TIMBERRIDGE DEVELOPMENT GROUP, LLC
2138 FLYING HORSE CLUB DRIVE
COLORADO SPRINGS CO 80921
(719) 592-9333

Prepared by:
CLASSIC CONSULTING
619 N. CASCADE AVE SUITE 200
COLORADO SPRINGS CO 80903
(719) 785-0790

Job No. 1185.30

PCD Project No. SF-22-041

FINAL DRAINAGE REPORT FOR
RETREAT AT TIMBERRIDGE FILING NO. 3

ENGINEER'S STATEMENT:

The attached drainage plan and report were prepared under my direction and supervision and are correct to the best of my knowledge and belief. Said drainage report has been prepared according to the criteria established by the County for drainage reports and said report is in conformity with the applicable master plan of the drainage basin. I accept responsibility for any liability caused by any negligent acts, errors, or omissions on my part in preparing this report.

COLORADO REGISTERED MARC ALAN WHORTON 37155 PROFESSIONAL ENGINEER

1/31/2024

Marc A. Whorton Colorado P.E. #37155 Date

OWNER'S/DEVELOPER'S STATEMENT:

I, the owner/developer, have read and will comply with all of the requirements specified in this drainage report and plan.

Business Name: TIMBERRIDGE DEVELOPMENT GROUP, LLC

By: LOREN J. MARELAND

Title: VICE PRESIDENT

Address: 2138 Flying Horse Club Drive

Colorado Springs, CO 80921

EL PASO COUNTY:

Filed in accordance with the requirements of the Drainage Criteria Manual, Volumes 1 and 2, El Paso County Engineering Criteria Manual and Land Development Code as amended.

Joshua Palmer, P.E. Date
County Engineer, / ECM Administrator

Conditions:

FINAL DRAINAGE REPORT FOR
RETREAT AT TIMBERRIDGE FILING NO. 3

TABLE OF CONTENTS:

PURPOSE	Page 4
GENERAL DESCRIPTION	Page 4
EXISTING DRAINAGE CONDITIONS	Page 4
PROPOSED DRAINAGE CONDITIONS	Page 7
DETENTION/SWQ FACILITIES	Page 16
SAND CREEK CHANNEL IMPROVEMENTS	Page 17
DRAINAGE CRITERIA	Page 23
FLOODPLAIN STATEMENT	Page 25
DRAINAGE AND BRIDGE FEES	Page 25
SUMMARY	Page 30
REFERENCES	Page 31

APPENDICES

VICINITY MAP

SOILS MAP (WEB SOIL SURVEY)

F.E.M.A. MAP / LOMR (08-08-0541P)

RECOMMENDATIONS PER SAND CREEK DBPS

HYDROLOGIC / HYDRAULIC CALCULATIONS

STORMWATER QUALITY / BMP CALCULATIONS

HEC-RAS CALCULATIONS

ARROYA CROSSING CALCULATIONS / CONTECH ARCH CULVERT PLANS

DRAINAGE MAPS

FINAL DRAINAGE REPORT FOR
RETREAT AT TIMBERRIDGE FILING NO. 3

PURPOSE

The purpose of this Final Drainage Report is to address on-site and off-site drainage patterns and identify specific drainage improvements and facilities required to minimize impacts to the adjacent properties.

GENERAL DESCRIPTION

The Retreat at TimberRidge Filing No. 3 is 44.578-acre site located in portions sections 21, 22, 27 and 28, township 12 south, range 65 west of the sixth principal meridian. The site is bounded on the north by Arroya Lane, to the south by existing Retreat at TimberRidge development, to the east by Sterling Ranch property (zoned for future urban development), and to the west by existing Retreat at TimberRidge development and Vollmer Road. The site is in the upper portion of the Sand Creek Drainage Basin. Both large lot rural single family residential and urban single family residential are proposed in this Filing.

The average soil condition reflects Hydrologic Group "B" (Pring coarse sandy loam) as determined by the "Web Soil Survey of El Paso County Area," prepared by the Natural Resources Conservation Service (see map in Appendix).

EXISTING DRAINAGE CONDITIONS

The Retreat at TimberRidge Filing No. 3 property is located in the upper portion of the Sand Creek drainage basin on the south edge of Black Forest. Nearly the entire site, other than the Sand Creek corridor, is mainly covered with native grasses with few or no pine trees. The Sand Creek channel bisects the site in a north-south direction. A wetlands delineation was prepared by CORE Consultants, Inc., which included the entire TimberRidge property and submitted along with Filing No. 1 and 2. (See Appendix) This document reflects some wetlands throughout the Sand Creek channel. Any effect on these wetlands within jurisdictional waters will be described later in this report along with the appropriate permitting.

Portions of this site have been previously studied in the "Sand Creek Drainage Basin Planning Study" (DBPS) prepared by Kiowa Engineering Corporation, March 1996. The portion of Sand Creek that traverses the site is defined as Reach SC-9 in the DBPS. 1000+ acres north of this property is tributary to this reach of the channel. (See Off-site Drainage Map in Appendix) According to the DBPS, this reach of Sand Creek all contained within the channel has the following flow characteristics: Q_{10} = 630 cfs Q_{100} = 2170 cfs. However, the 100 yr. flow recognized by FEMA in the LOMR 08-08-0541P with effective date of July 23, 2009, equals nearly Q_{100} = 2600 cfs. Also, Sterling Ranch has finalized their MDDP which includes modeling of this property as well as the large acreage north up to the top of the Sand Creek Basin. The MDDP suggests developed flows within Sand Creek that are significantly lower than both the DBPS and FEMA currently show. These flows are as follows: At Arroya Lane crossing (SR MDDP DP-77) Q_{10} = 581 cfs Q_{100} = 1468 cfs and TimberRidge south property line (SR MDDP DP-71) Q_{10} = 630 cfs Q_{100} = 1638 cfs. Even with the County approval of the MDDP and these adjusted flows, a CLOMR/LOMR will be required to be prepared, submitted and approved by FEMA prior to utilizing these flows in any Final Drainage Reports within this development. Based on the anticipated 12–18-month timing of the CLOMR/LOMR process, this development will continue to utilize the much larger FEMA recognized flows for all proposed channel improvements through this property. This is how Filings No. 1 and 2 were developed.

The majority of these off-site flows enter the property at the north end of the site conveying flows from the northwest (Black Forest area) and the off-site stock ponds to the north (both tributary to hundreds of acres of property in Black Forest). There are multiple existing culvert crossings of Vollmer Rd. just north of Arroya Lane to facilitate these historic flow patterns. The following are the few key culverts that directly feed the Sand Creek channel north of Arroya Lane: Approximately 1,000 feet north of Arroya Lane, an existing 36" CMP crosses Vollmer Road (Basin SC-1 on Off-site Drainage Map). A small basin and natural ravine just west of Vollmer feeds this facility. From a recent field visit, this small facility seems to be in good working condition, however, not labeled in the DBPS. Another 700 feet+ north along Vollmer a much larger basin exists west of the roadway. This off-site basin is approximately 350+ acres northwest of Vollmer

Road (Basin SC-2 on Off-site Drainage Map). As shown within the DBPS, this existing crossing is a 60" CMP with some very dense and tall vegetation at both the entrance and exit of this facility. But, based on a recent field visit this facility seems to be in good working condition. The DBPS depicts this facility and recommends an additional 60" CMP at this location. However, there are no signs of erosion or over topping the road at this location at this time based on the current development within the tributary area to this facility. Based on the existing surrounding topography and roadway configuration, the 100 yr. historic flows at this location would appear to spill over the roadway and continue in their historic drainage pattern downstream within the upper reach of Sand Creek.

The following descriptions represent the pre-development flow design points for the property excluding the major off-site flows within Sand Creek just described:

Basin EX-7 (Q_5 = 7 cfs, Q_{100} = 37 cfs) consists of a 27.6 Ac. off-site basin west of Vollmer Road (not a part of this development) that drains under Vollmer into the TimberRidge property via an existing 48" CMP culvert and then within a natural ravine that routes the off-site flow towards the existing dual 30" RCP culverts crossing Aspen Valley within TimberRidge Filing 2 at EX DP-1.

Basin EX-1 (Q_5 = 1.4 cfs, Q_{100} = 8 cfs) consists of a 4.0 Ac. on-site basin that sheet flows towards the natural ravine traversing his area and then ultimately off-site through Basin EX-9 towards the existing dual 30" RCP culverts.

Basin EX-2 (Q_5 = 1 cfs, Q_{100} = 5 cfs) consists of 2.8 Ac. on-site basin that sheet flows towards the proposed extension of Aspen Valley Rd. It is then conveyed south via sideroad ditch through Basin EX-9 towards the existing dual 30" RCP culverts.

Basin EX-9 (Q_5 = 4 cfs, Q_{100} = 14 cfs) consists of a 6.0 Ac. off-site basin within TimberRidge Filing 2 containing the natural ravine that has been improved with permanent rock check dams. The combined flows from the basins described above are then routed towards the existing dual 30"

RCP culverts at Design Point **EX DP-1 (Q_5 = 11 cfs, Q_{100} = 55 cfs).** Per the TimberRidge Filing 2 approved final drainage report (DP-1) the flows were determined to be (Q_5 = 12 cfs, Q_{100} = 57 cfs) at this location.

Basin EX-3 (Q_5 = 3 cfs, Q_{100} = 20 cfs) consists of both on and off-site property containing 11.1 Ac. that sheet flows in a southwesterly direction towards Design Point **EX DP-2 (Q_5 = 3 cfs, Q_{100} = 20 cfs).** At this location a 30" RCP storm pipe exists and collects these flows. Per the TimberRidge Filing 1 approved final drainage report (DP-18) the flows were determined to be (Q_5 = 6 cfs, Q_{100} = 30 cfs) at this location.

Basin EX-4 (Q_5 = 5 cfs, Q_{100} = 35 cfs) consists of 23.4 Ac. that is mostly comprised of tributary area off-site within the Sterling Ranch Master Plan. This basin sheet flows in a southwesterly direction towards a natural ravine and then directly into an existing stock pond. A 24" RCP storm system was constructed with TimberRidge Filing 1 routing the release from this facility directly into Sand Creek, as currently taking place. Per the TimberRidge Filing 1 approved final drainage report (DP-21) the flows were determined to be (Q_5 = 5 cfs, Q_{100} = 35 cfs) at this location.

Basin EX-5 (Q_5 = 4 cfs, Q_{100} = 21 cfs) consists of 11.7 Ac. of the remaining portion of the yet undeveloped TimberRidge property along with off-site future Sterling Ranch property. This entire area sheet flows in a southwesterly direction towards the secondary emergency access road up to Arroya Lane. An existing temporary sediment basin currently captures this off-site tributary area.

Basin EX-6 (Q_5 = 4 cfs, Q_{100} = 14 cfs) consists of 5.7 Ac. of the remaining portion of the yet undeveloped TimberRidge property along with some rear yards of TimberRidge Filing 2 lots. This area sheet flows in a westerly direction towards the secondary emergency access road. An existing temporary sediment basin currently captures this tributary area.

Basin EX-8 (Q_5 = 4 cfs, Q_{100} = 27 cfs) consists of 14.8 Ac. of the remaining portion of the yet undeveloped TimberRidge property adjacent to Sand Creek. This entire area sheet flows directly into Sand Creek.

Basin EX-10 (Q_5 = 0.5 cfs, Q_{100} = 1.5 cfs) consists of 0.61 Ac. on-site basin that sheet flows in a southerly direction off-site towards the sideroad ditch along Falcon Nest Ct. It is then conveyed south via storm sewer towards the existing pond 3 within Retreat at TimberRidge Filing No. 2.

PROPOSED DRAINAGE CONDITIONS

Proposed development within the Retreat at TimberRidge Filing No. 3 will consist of a variety of different residential lot sizes ranging from 1.0 – 2.5-acre large rural lots to 12,000 SF min. urban lots. The rural lots will have paved streets and roadside ditches while the urban lots paved streets with County standard curb, gutter and sidewalk. Development of the urban lots proposed will consist of overlot grading for the planned roadways and lots. Development of rural lots proposed within the site will be limited to roadways and building pads, conserving the natural feature areas. Individual home sites on these lots are to be left generally in their natural condition with minimal disturbance to existing conditions per individual lot construction. Per the El Paso County ECM, Section I.7.1.B.5, rural lots of 2.5 ac. and larger are not required to provide Water Quality Capture Volume (WQCV). However, based on the current County/Urban Drainage stormwater quality standards, a WQCV component is automatically built into the UD Detention spreadsheet utilized in the detention basin design. Thus, the proposed facilities within both the rural and urban portions of this development will provide WQCV along with an Excess Urban Runoff Volume (EURV) in the lower portion of the facility storage volume with an outlet control device. Frequent and infrequent inflows are released at rates approximating undeveloped conditions. This concept provides some mitigation of increased runoff volume by releasing a portion of the increased runoff at a low rate over an extended period of time, up to 72 hours. This means that frequent storms, smaller than the 2-year event, will be reduced to very low flows near or below the sediment carrying threshold value for downstream drainage ways. Also, by incorporating an

outlet structure that limits the 100-year runoff to the undeveloped condition rate, the discharge hydrograph for storms between the 2 year and the 100-year event will approximate the hydrograph for the undeveloped conditions and will help effectively mitigate the effects of development. As reasonably possible, WQCV will be provided for all new roads and urban lots. The following describes how this development proposes to handle both the off-site and on-site drainage conditions:

As mentioned previously, the majority of the off-site flows are already within the Sand Creek channel prior to entering the property. However, the few off-site basins that must travel through the proposed site development areas prior to entering Sand Creek have been accounted for.

The following represent the basins east of Sand Creek:

Design Point 1 (Q_5 = 6 cfs, Q_{100} = 30 cfs) represents developed flows from Basin A (14.2 Ac.). This basin develops flows from both on and off-site area that sheet flows in a southwesterly direction towards Hawks Hill Ct. and the existing 30" RCP storm at Design Point. At this location both the 5-yr. and 100-yr. flows will be completely captured and routed further downstream. Currently this storm system day lights into a natural ravine just west of Hawks Hill Ct. and ultimately into Sand Creek. With the construction of this Filing, a portion of this storm pipe will be removed west of the roadway, a Type II storm manhole will be installed to route these flows further east in Hawks Hill Ct. and then south down Antelope Ravine Dr. These developed flows enter the existing storm system within Filing 1 and are then treated by FSD Pond 2 at the south end of Filing 1. These developed flows remain consistent as accounted for in the previous Filing 1 approved drainage report at Design Point 18 (Q_5 = 6 cfs, Q_{100} = 30 cfs). The emergency overflow route for this sump condition will be over the crown of the roadway and then conveyed directly to Sand Creek via a side lot swale on Lot 32 within a drainage esmt.

Design Point 2 (Q_5 = 2 cfs, Q_{100} = 4 cfs) represents developed flows from Basin C (1.4 Ac.). This basin develops flows from the front yards that then travel as curb and gutter flow down to

Design Point 2. At this location a 5' Type R Sump Inlet will be installed to completely capture both the 5-yr. and 100-yr. developed flows. An 18" RCP storm pipe will then convey these flows further downstream. These developed flows enter the existing storm system within Filing 1 and are then treated by FSD Pond 2 at the south end of Filing 1.

Design Point 3 (Q_5 = 5 cfs, Q_{100} = 21 cfs) represents developed flows from Basins B (8.8 Ac.), D (0.20 Ac.) and OS-2 (0.47 Ac.). These basins develop flows in a westerly direction towards Antelope Ravine Dr. and then south as curb and gutter flow down to Design Point 3. At this location a 15' Type R Sump Inlet will be installed to completely capture both the 5-yr. and 100-yr. developed flows. A 30" RCP storm pipe will then convey these flows further downstream. These developed flows enter the existing storm system within Filing 1 and are then treated by FSD Pond 2 at the south end of Filing 1. The temporary sediment basin within lots 15-17 will be removed along with the completion of the overlot grading for these lots. The emergency overflow at this sump condition will pond up 1.0' and then spill over the high point in Antelope Ravine and travel south within the roadway.

Design Point 4 (Q_5 = 2 cfs, Q_{100} = 8 cfs) represents developed flows from Basins F (0.80 Ac.) and OS-7 (1.4 Ac.). These basins develop flows that travel as curb and gutter flow down Antelope Ravine Dr., off-site into Filing No. 1 to Design Point 4. At this location an existing 10' Type R At-Grade, installed with Filing 1 construction captures the following: (Q_5 = 2.0 cfs, Q_{100} = 6.3 cfs) captured and (Q_5 = 0.0 cfs, Q_{100} = 1.7 cfs) flow-by. These developed flows and capture percentage remain consistent as accounted for in the previous Filing 1 approved drainage report at Design Point 6 (Q_5 = 2 cfs, Q_{100} = 8 cfs). An 18" RCP storm pipe will then convey these flows to connect to the existing 36" RCP outfall storm system tributary to FSD Pond 2 as described in the Filing 1 approved report. These flows are then formerly treated within this existing facility.

Design Point 5 (Q_5 = 5 cfs, Q_{100} = 17 cfs) represents developed flows from Basins E (2.3 Ac.) and OS-3 (4.2 Ac.). These basins develop flows that travel as curb and gutter flow down Antelope Ravine Dr. and Elk Antler Dr. within Filing No. 1 to Design Point 5. At this location an existing 15' Type R At-Grade, installed with Filing 1 construction captures the following: (Q_5 = 5.0 cfs, Q_{100} = 12.7 cfs) captured and (Q_5 = 0.0 cfs, Q_{100} = 4.3 cfs) flow-by. These developed flows and capture percentage remain consistent as accounted for in the previous Filing 1 approved drainage report at Design Point 5 (Q_5 = 5 cfs, Q_{100} = 17 cfs). A 24" RCP storm pipe will then convey these flows to connect to the existing 36" RCP outfall storm system tributary to FSD Pond 2 as described in the Filing 1 approved report. Again, these flows are then formerly treated within this existing facility.

Design Point 6 (Q_5 = 5 cfs, Q_{100} = 35 cfs) represents pre-developed flows from off-site Basin OS-1 (24.1 Ac.) within the future northern portion of the Sterling Ranch property. These flows currently sheet flow into a natural ravine that then conveys them to a proposed sediment basin to be constructed on the Sterling Ranch property within a drainage esmt. acquired from the Sterling Ranch ownership group. This facility will replace the existing on-site stock pond within lot 12, which will in turn be removed and filled in. The proposed drainage esmt. will be acquired prior to the removal of the existing stock pond and any grading taking place off-site. An existing 24" RCP storm system that daylights directly into Sand Creek (previously constructed with Filing 1) will be extended up to the new off-site sediment basin and be utilized for the outlet. Upon development within this portion of the Sterling Ranch property, this sediment basin will be replaced with a permanent FSD facility to be held to these release rates. The TimberRidge Development will be responsible for the ownership and maintenance of the 24" RCP storm system and off-site sediment basin until this development within this portion of Sterling Ranch takes place.

Design Point 7 (Q_5 = 2 cfs, Q_{100} = 6 cfs) represents flows from Basin OS-4 (3.3 Ac.). This basin is made up of Arroya Lane development (Rural Collector) along with off-site pre-developed flows from property to the north of Arroya Lane. Flows from this basin sheet flow into the sideroad

ditch along the north side of Arroya Lane and then westerly towards Design Point 7. At this location an 18" RCP storm pipe will be installed to completely capture both the 5-yr. and 100-yr. developed flows. These flows are then conveyed further west where they combine with other developed flows within Arroya Lane and then towards Design Point 10 for stormwater quality treatment in a proposed Rain Garden 1.

Design Point 8 (Q_5 = 1 cfs, Q_{100} = 3 cfs) represents developed flows from Basin N (0.55 Ac.). This stretch of Arroya Lane is proposed as an urban section with curb and gutter in order to collect the impervious roadway area efficiently. The developed flows travel via curb and gutter towards Design Point 8 where a 5' Type R Sump Inlet will be installed to completely capture both the 5-yr. and 100-yr. developed flows. An 18" RCP and then 24" RCP storm pipe will then convey these flows further downstream towards the Rain Garden 1 planned at Design Point 10.

Design Point 9 (Q_5 = 2 cfs, Q_{100} = 3 cfs) represents developed flows from Basin M (0.54 Ac.). This stretch of Arroya Lane is also proposed as an urban section with curb and gutter. The developed flows travel via curb and gutter towards Design Point 9 where a 5' Type R Sump Inlet will be installed to completely capture both the 5-yr. and 100-yr. developed flows. An 18" RCP and then 24" RCP storm pipe will then convey these flows further downstream towards the Rain Garden 1 planned at Design Point 10.

Design Point 10 (Q_5 = 4 cfs, Q_{100} = 11 cfs) represents the total developed flows routed to the proposed Rain Garden 1. This includes **Basin O (Q_5 = 0.3 cfs, Q_{100} = 2 cfs),** a 0.61 Ac. basin that sheet flows directly into the Rain Garden 1 on the south side of Arroya Lane.

The following represents the proposed **Rain Garden 1 design**:

(See MHFD-Detention Design Sheets in Appendix)

Total Tributary acreage: 5.0 Ac. **(Basins: OS-4, N, M and O)**

0.042 Ac.-ft. WQCV required

0.238 Ac.-ft. 100-yr. Storage

0.279 Ac.-ft. Total

Total In-flow: **Q_5 = 4 cfs, Q_{100} = 11 cfs**

Pond Design Release: **Q_5 = 1.7 cfs, Q_{100} = 7.0 cfs**

(Ownership and maintenance by the Retreat at TimberRidge Metro District 2)

Basin OS-5 (Q_5 = 9 cfs, Q_{100} = 61 cfs) represents a large off-site basin that is partially owned by the TimberRidge Development Group. This mostly undeveloped basin is planned to be future 2.5 Ac. to 5.0 Ac. Rural residential lots. This basin currently sheet flows in a westerly direction and crosses the adjacent property owner's driveway just prior to directly entering Sand Creek. With the development of Arroya Lane and the culvert crossing proposed at Sand Creek, a short portion of this driveway will need to be relocated. In an effort to alleviate possible drainage concerns for this new driveway location and the off-site flows currently generated from Basin OS-5, an off-site sediment basin is proposed within the TimberRidge Development Group property to dissipate these flows. The location of this facility will likely be the permanent location of a future FSD Pond required for the development of this large parcel north of Arroya Lane. A 30" RCP storm stub is proposed to outlet this temporary sediment Basin along with the permanent future facility. This storm system will daylight directly into Sand Creek at the proposed culvert crossing.

Basin H1 (Q_5 = 2 cfs, Q_{100} = 8 cfs) is 2.5 Ac. and represents developed flows from the west half of Hawks Hill Ct. and the proposed rural lot 4. These developed flows will continue to sheet flow in a southwesterly direction and directly into Sand Creek. The construction of Hawks Hill

Ct. cuts off the majority of the pre-development area tributary to this portion of Sand Creek. Given the nature of this large rural lot, the minimal unconnected impervious area anticipated at the rear of this single 2.5 Ac. lot and the sizeable receiving pervious area, the WQCV reduction = 100% with 0 untreated WQCV within this basin. (See UD-BMP Runoff Reduction Sheet – Ver. 3.07 in Appendix)

Basin H2 (Q_5 = 3 cfs, Q_{100} = 11 cfs) is 3.1 Ac. and represents developed flows from the west half of Hawks Hill Ct. and the proposed rural lots 31-33. These developed flows will continue to sheet flow in a southwesterly direction and directly into Sand Creek. The construction of Hawks Hill Ct. cuts off the majority of the pre-development area tributary to this portion of Sand Creek. Given the nature of these large rural lots, the minimal unconnected impervious area anticipated at the rear of the lots and the sizeable receiving pervious area, the WQCV reduction = 100% with 0 untreated WQCV within this basin. (See UD-BMP Runoff Reduction Sheet – Ver. 3.07 in Appendix)

Basin G (Q_5 = 1 cfs, Q_{100} = 5 cfs) is 2.2 Ac. and represents developed flows from the rear yards of proposed lots 22-30. These developed flows will continue to sheet flow in a westerly direction and directly into Sand Creek. Given the minimal unconnected impervious area introduced and sizeable receiving pervious areas per lot (25' min. rear yard setback), the WQCV reduction = 100% with 0 untreated WQCV within this basin. (See UD-BMP Runoff Reduction Sheet – Ver. 3.07 in Appendix)

Basin I (Q_5 = 0.8 cfs, Q_{100} = 4 cfs) is 2.6 Ac. and represents the proposed tract containing the existing Sand Creek channel. No development is proposed in this basin other than the extension of the trail system along the west side of the creek corridor and the associated grading for the culvert crossing of Arroya Lane. These flows will continue to sheet flow to the base of the creek bed and be conveyed south within the natural channel. The trail within this basin falls under the WQ exclusion 1.7.1.B.9.

The following represent the basins and design points west of Sand Creek:

Basin J1 (Q_5 = 2 cfs, Q_{100} = 6 cfs) represents a 2.4 ac. portion of the proposed rural lot 3 and the adjacent Aspen Valley roadway extension that will continue to sheet flow in a southeasterly direction towards Sand Creek. Given the size of this lot (rural residential large lot - 2.5 ac. min.) stormwater quality is not required for the lot area but only the adjacent paved roadway extension. Based on the impervious area of this minimal roadway extension (0.25 ac.), this basin meets the requirements for exclusions I.7.1.B.5 & I.7.1.C.1 of the ECM. (See drainage map for exclusion area)

Basin J2 (Q_5 = 0.2 cfs, Q_{100} = 0.9 cfs) represents a 0.4 ac. portion of the proposed rural lot 3 that will continue to sheet flow in a southerly direction into Filing 2. This area will then be captured and formerly treated in the existing Pond 3. This area was previously accounted for in the Filing 2 approved FDR.

Design Point 11 (Q_5 = 3 cfs, Q_{100} = 11 cfs) represents construction of the north half of Arroya Lane and off-site pre-developed flows from **Basin OS-6 (Q_5 = 3 cfs, Q_{100} = 11 cfs),** a 5.9 Ac. basin that sheet flows in a southeasterly direction towards Arroya Lane. The majority of this off-site area is within the RR-5 zone and planned to be a single future rural residential lot. Given the size of this basin and future land use (rural residential large lot - 2.5 ac. min.) stormwater quality is not required for the lot area but only the adjacent paved roadway extension. Based on the impervious area of the adjacent roadway improvements for Vollmer and Arroya Lane (0.70 ac.), this basin meets the requirements for exclusions I.7.1.B.5 & I.7.1.C.1 of the ECM. (See drainage map for exclusion area) At Design Point 11, these developed flows will be routed directly to Sand Creek with a rip-rap dissipator at the outfall location. (See Appendix) However, with the future development of the single rural residential large lot within basin OS-6, a proposed Rain Garden may be constructed to collect this runoff at Design Point 11 prior to entering Sand Creek. Given the significant, well-established vegetation within the channel adjacent to this property, the construction of this future Rain Garden is suggested to meet the

required creek improvement obligation as described in the Sand Creek DBPS. Details for this facility may be found in the Final Drainage Report required for the platting of this future lot.

As mentioned previously, Basin EX-7 (Q_5 = 7 cfs, Q_{100} = 37 cfs) consists of the (27.6 Ac.) off-site basin west of Vollmer Road (not a part of this development) that drains under Vollmer into the TimberRidge property via an existing 48" CMP culvert. This facility will remain. These flows are then combined with the flows from basins L, K and EX-9. Basins L (Q_5 = 2 cfs, Q_{100} = 9 cfs) and K (Q_5 = 2 cfs, Q_{100} = 8 cfs) consist of (3.9 Ac. and 3.3 Ac. respectively) on-site developed flows from proposed lots 1 and 2 adjacent to Vollmer Rd. and Arroya Lane. These flows travel as natural channel and sideroad ditch flows directly into Basin EX-9. Basin EX-9 (Q_5 = 4 cfs, Q_{100} = 14 cfs) consists of (6.0 Ac.) made up of two existing rural lots within Filing 2 and the natural ravine. Along with Filing 2 construction, permanent rock check dams have been installed down this natural ravine tributary to the dual existing 30" RCP culverts at **Design Point 12 (Q_5 = 12 cfs, Q_{100} = 57 cfs).** This is compared to the anticipated developed flows within the Filing 2 report at DP-1 of (Q_5 = 12 cfs, Q_{100} = 57 cfs). Thus, these facilities will continue to adequately handle the developed flows. As described in the Filing No. 2 FDR, these combined developed flows are then conveyed via storm system to FSD Pond 3 for stormwater quality treatment.

DETENTION / STORMWATER QUALITY FACILITES

As required, storm water quality measures will be utilized in order to reduce the amount of sediment, debris and pollutants that are allowed to enter Sand Creek. These features include but are not limited to Rain Gardens, temporary sediment basins, runoff reduction RPA's and two existing FSD's. Site Planning and design techniques for the large lot, rural areas should help limit impervious area, minimize directly impervious area, lengthen time of travel and increase infiltration in order to decrease the rate and volume of stormwater runoff. Urban areas that require detention will provide a Water Quality Capture Volume (WQCV) and Excess Urban Runoff Volume (EURV) in the lower portion of the facility storage volume that will release the more frequent storms at a slower rate to help minimize the effects of development of the property.

The proposed SWQ facilities are to be private facilities with ownership and maintenance by the TimberRidge Metropolitan District 2. After completion of construction and upon the Board of County Commissioners acceptance, the Sand Creek channel and proposed structural improvements within the creek will be owned and maintained by the El Paso County along with all drainage facilities within the public Right of Way. The remaining portion of the channel (non-structural) will be maintained by the Retreat at TimberRidge Metro District 2. Access ramps are provided in multiple locations and constructed along with the channel improvements and are accessed from the proposed regional trail along the west side of the channel.

SAND CREEK CHANNEL IMPROVEMENTS

As stated in the Sand Creek DBPS, this Reach SC-9 is recommended as a floodplain preservation design concept. Given the fact of the current requirements for detention/SWQ facilities planned for the property with designed release at or below pre-development flows, the existing Sand Creek drainageway is expected to remain stable. From the HEC-RAS model provided in the appendix, channel velocities through this portion of the reach range from 1.2 – 12.7 ft/s and the shear stress range from 0.3 – 19.1 lb/sq ft. Although, based on the findings from the CORE Consultants, Inc. Impact Identification Report, no significant erosion or channel degradation through this property currently exists at this time. Specifically located grade control structures (See Appendix) were specified in the DBPS through this reach in order to slow the channel velocity to the DBPS recommended 7 feet per second and to prevent localized and long-term stream degradation affecting channel linings and overbanks. The allowable velocity and shear stress will vary depending upon the existing riparian vegetation/wetlands found within the channel and overbank floodplain terrace areas. The following general criteria taken from the Mile High Flood Control District (Table 8-3) has been utilized for this channel design with adjustments made for site specific riparian vegetation through this reach (See HEC-RAS Modeling Section below):

Table 8-3. Design parameters for naturalized channels

Design Parameter	Design Value
Maximum 100-year depth outside of bankfull channel	5 ft
Roughness values	Per Table 8-5
Maximum 5-year velocity, main channel (within bankfull channel width) (ft/s)	5 ft/s
Maximum 100-year velocity, main channel (within bankfull channel width) (ft/s)	7 ft/s
Froude No., 5-year, main channel (within bankfull channel width)	0.7
Froude No., 100-year, main channel (within bankfull channel width)	0.8
Maximum shear stress, 100-year, main channel (within bankfull channel width)	1.2 lb/sf
Minimum bankfull capacity of bankfull channel (based on future development conditions)	70% of 2-year discharge or 10% of 100-yr discharge, whichever is greater[1]
Minimum bankfull channel geometry	Per Table 8-2
Minimum bankfull channel width/depth ratio (Equation 8-3)	9
Minimum entrenchment ratio (Equation 8-4)	3
Maximum longitudinal slope of low flow channel (assuming unlined, unvegetated low flow channel)	0.2 percent
Bankfull channel sinuosity (Equation 8-5)	1.1 to 1.3
Maximum overbank side slope	4(H):1(V)
Maximum bankfull side slope	2.5(H):1(V)
Minimum radius of curvature	2.5 times top width

[1]Roughly equivalent to a 1.5-year event based on extrapolation of regional data.

(See page 21 below for allowable shear stress adjustments)

CLASSIC CONSULTING ENGINEERS & SURVEYORS

A HEC-RAS hydraulic analysis for this portion of Reach SC-9 has been provided in order to determine any necessary channel improvements for the proposed Filing No. 3 development. A separate wetland impact report along with the Section 404 permitting, prepared by Bristlecone Ecology, LLC, will be developed based on these proposed channel improvements and submitted directly to the U.S. Army Corps of Engineers with necessary consult with U.S. Fish and Wildlife for their review and approval. This report was submitted separately to El Paso County Staff and can be found in same file number SF-22-041.

HEC-RAS MODELING

HEC-RAS ver. 6.3.1 was used to perform an updated one-dimensional, steady flow hydraulic model of the upper portion of Reach SC-9 from approximately 400 feet north of Arroya Lane down to the Retreat at TimberRidge Filing 2 boundary within Sand Creek. This model defined the stream centerline, overbanks, cross-sections and manning's n values. The stream centerline follows the channel thalweg to define the reach network. Cross-section topography data was obtained by using the generated surface from the 2-ft. flown contours utilized for all site design. This data was then utilized within the AutoCAD containing three-dimensional coordinates for the stream centerline, cross-sections, reach stations, overbank stations and reach lengths. Different Manning's n values were applied across the various channel cross-sections to reflect the changes in vegetative cover within the channel and overbanks. The selected Manning's n values for the channel and overbanks were determined using Tables 10-1 and 10-2 from the DCM and Table 3 from the USGS Guide for selecting Manning's Roughness Coefficients based on numerous site visits in an effort to photograph and document each cross-section. (See Appendix) The following table summarizes the selected Manning's n values:

Table 1 Manning's n Values

Feature	Manning's n Value
Main Channel	0.03 – 0.10
Overbank Floodplain Terraces	0.12 – 0.16

Steady flow data was entered starting just north of Arroya Lane, channel station 14+00.86 down to approximately 300 feet south of the Filing 2 boundary, channel station 1+02.08 all within the Sand Creek DBPS segment 171. Steady flow data corresponding to recurrence intervals of 100 Yr. for the FEMA, DBPS and Sterling Ranch MDDP conditions was entered. The models were run in subcritical mode to evaluate hydraulic conditions. Boundary conditions for the entire reach were based on normal depth calculations for the upstream and downstream channel slopes. The following table summarizes the flows used in the models:

Table 2 Model Flow Values

Flood Event / Location	Flow Value (cfs)
DBPS Segment 171	
FEMA 100 Yr.	2600
DBPS 100 Yr.	2170
SR MDDP 100 yr.	1468
DBPS 10 yr.	630
SR MDDP 10 yr.	581

Per the approved DBPS, the anticipated developed flows just upstream of Arroya Lane are Q_{10} = 630 cfs and Q_{100} = 2170 cfs as depicted within DBPS segment no. 171. Per the approved Sterling Ranch MDDP, the flows are are Q_{10} = 581 cfs and Q_{100} = 1468 cfs. As discussed earlier, the FEMA FIS flows appear to be significantly higher than both those presented in the DBPS and the Sterling Ranch MDDP. However, we have continued to utilize the significantly larger flows as determined by the FEMA FIS (2600 cfs) in the channel improvement designs. The proposed public roadway crossing of Sand Creek at Arroya Lane will be constructed with this Filing No. 3 and consists of dual 6'x12' CBC with concrete headwalls and wingwalls to facilitate conveyance. Incidentally, the DBPS suggests a single cell 6'x12' CBC at this roadway crossing for 10-yr. conveyance.

Based on site visits during September of 2022, the entire Sand Creek drainage corridor through the Retreat at TimberRidge development was walked and photographed for documentation purposes and aide in the HEC-RAS modeling. (See Appendix) As discovered in the field and documented in the photos taken along the corridor, this reach of the Sand Creek channel appears very stable with no signs of erosion within the main channel or channel overbanks. This is mainly due to the significant vegetal cover throughout the reach. The classification of the vegetal cover seems to have a range from Retardance Class A-C as defined by HEC-15 chart (See Appendix) This type of vegetation retardance significantly increases the allowable shear stress within the channel while reducing the velocity. The following table defines the retardance level based on the vegetation class:

Table 3

Vegetal Retardance Curve Index by SCS Retardance Class

SCS Retardance Class	Retardance Curve Index
A	10.0
B	7.64
C	5.60
D	4.44
E	2.88

Based on this information, the maximum allowable sheer stress is found by the flowing equation:

$$\tau = 0.75\text{Curve Index}$$

Thus, the allowable range of shear stress for this reach of Sand Creek equals 4.2 – 7.5 (lb/ft^2). With the proposed channel improvements/structures, all sections within this reach fall within the shear stress range above.

Referencing the HEC-RAS model calculations in the Appendix shows that only one station section showed velocity outside the recommended 5.0 - 7.0 ft./sec. per Table 8.3 and shear stress exceeding the limit above. This station is immediately downstream of the proposed culvert crossing (Sta: 9+21.93). Improvements proposed to help stabilize this area include proposed Rip-

rap dissipation and a check structure installed at approximately Station 8+35. Thus, the channel improvements proposed within Filing No. 3 consist of dual 6'x12' concrete box culverts, rip-rap dissipation immediately downstream of the culverts and installation of an additional check structure located at station 8+35. The proposed box culverts provide for full conveyance of the approved Sterling Ranch MDDP 100-yr. flows (1468 cfs) along with conveyance of the Sand Creek DBPS 100-yr. flows (2170 cfs) with minor overtopping of the roadway (less than 12") as allowed per ECM Criteria 6.4.1 for a collector road. (See Appendix)

The existing channel slope throughout this reach ranges from 0.7% to 2.5%. Per the HEC-RAS model, the proposed channel velocities downstream of the culvert range from 2.9 ft./sec. to 4.9 ft./sec. After improvements, all stations are within the allowable velocity of 7.0 ft./sec. and shear stress is below 5.0 based on the SCS Retardance Index above. The proposed model calculations also show only one station with Froude No. over the 0.8 criteria. However, at this specific area, the proposed check structure and rip-rap are planned.

The DBPS does not depict any structures along this stretch of channel. However, one additional check structure is being planned to further limit degradation and help control the elevation of the channel invert. The check structure is designed to be sheet piling with a concrete cap per Urban Drainage Vol. 2 Figures 9-27 thru 9-28. The intent of this structure is to hold grade so if the stream wants to flatten its equilibrium slope, the incision is limited. Thus, the plan is for this structure to eventually become drop structures as dictated by future channel characteristics. The lowest elevation of this structure is 7228.0 with the proposed upstream box culverts toe wall elevation being 7227.70.

A public trail/ access road along the west side of Sand Creek is planned and will allow for maintenance access to associated channel improvements. (See channel plans for exact ramp locations and details)

DRAINAGE CRITERIA

Hydrologic calculations were performed using the City of Colorado Springs/El Paso County Drainage Criteria Manual, as revised in November 1991 and October 1994 with County adopted Chapter 6 and Section 3.2.1 of Chapter 13 of the City of Colorado Springs/El Paso County Drainage Criteria Manual as revised in May 2014. Individual on-site developed basin design used for detention/SWQ basin sizing, inlet sizing and storm system routing was calculated using the Rational Method. Runoff Coefficients are based on the imperviousness of the particular land use and the hydrologic soil type in accordance with Table 6-6. The average rainfall intensity, by recurrence interval found in the Intensity-Duration-Frequency (IDF) curves in Figure 6-5. (See Appendix)

The City of Colorado Springs/El Paso County DCM requires the Four Step Process for receiving water protection that focuses on reducing runoff volumes, treating the water quality capture volume (WQCV), stabilizing drainage ways, and implementing long-term source controls. The Four Step Process pertains to management of smaller, frequently occurring storm events, as opposed to larger storms for which drainage and flood control infrastructure are sized. Implementation of these four steps helps to achieve storm water permit requirements.

This site adheres to this **Four Step Process** as follows:

1. **Employ Runoff Reduction Practices:** Proposed rural lot impervious area (roof tops, patios, etc.) will sheet flow across lengthy landscape/natural areas within the large lots and proposed urban lot impervious areas (roof tops, patios, etc.) will sheet flow across landscaped yards and through open space areas to slow runoff and increase time of concentration prior to being conveyed to the proposed public streets or detention facilities. This will minimize directly connected impervious areas within the project site.

Reference the Water Quality Treatment Plan Map in the Appendix for the following:

Area qualifies for exclusion E – large lot single family	4.9 ac.
Area qualifies for exclusion H – stream stabilization	2.6 ac.
Area qualifies for 20% exclusion (ECM I.7.1.C.1)	5.9 ac.
Area treated in existing permanent Pond 3	40.8 ac.
Area treated in existing permanent Pond 2	33.77 ac.
Areas treated in proposed Rain Garden Facility	5.0 ac.
Area of runoff reduction water quality treatment	5.9 ac.

(Reference Runoff Reduction Calculations in Appendix for these areas)

Filing No. 3 Total platted area	**44.35 ac.**
Off-site area treated in temporary sediment basins	69.9 ac.

2. **Stabilize Drainageways:** After developed flows utilize the runoff reduction practices through the front and rear yards, developed flows will travel via roadside ditches in the large lot, rural portions of the development, curb and gutter within the public streets in the urban portions of the development and eventually public storm systems. These collected flows are then routed directly to existing extended detention basins (full-spectrum facilities). Where developed flows are not able to be routed to public street, sheet flows will travel across landscaped rear yards and then through undeveloped property prior to entering Sand Creek. The Sand Creek channel corridor will be protected with various channel improvements as recommended in the Sand Creek DBPS and proposed with this Filing in order to reduce velocities to erosive levels.

3. **Provide Water Quality Capture Volume (WQCV):** Runoff from this development will be treated through capture and slow release of the WQCV and excess urban runoff volume (EURV) in the existing Full-Spectrum permanent Extended Detention Basins designed per current El Paso County drainage criteria (constructed with Filings 1 & 2). For the 5.3 ac. that is not able to be captured and routed to one of the permanent EDB's, Runoff Reduction practices are required and provided in the 25'-35' rear setbacks of the lots

within these specific basins. Reference Runoff Reduction Calculations in Appendix for these areas that show a 100% WQCV Reduction and meets El Paso County standards.

4. **Consider need for Industrial and Commercial BMPs**: No industrial or commercial uses are proposed within this development. However, a site-specific storm water quality and erosion control plan and narrative has been submitted along with the grading and erosion control plan. Details such as site-specific sediment and erosion control construction BMP's as well as temporary and permanent BMP's were detailed in this plan and narrative to protect receiving waters. Multiple temporary BMP's are proposed based on specific phasing of the overall development. BMP's will be constructed and maintained as the development has been graded and erosion control methods employed.

FLOODPLAIN STATEMENT

Portions of this site are located within a floodplain as determined by the Flood Insurance Rate Maps (F.I.R.M.) Map Number 08041C 0535G with effective date of December 7, 2018 and the previously mentioned LOMR 08-08-0541P with an effective date of July 23, 2009. (See Appendix).

DRAINAGE AND BRIDGE FEES

This site lies entirely within the Sand Creek Drainage Basin boundaries.

The fees are calculated using the following impervious acreage method approved by El Paso County. **The Retreat at TimberRidge Filing No. 3 has a total area of 44.35 acres** with the following different land uses proposed:

2.60 Ac.	Sand Creek Drainage corridor (Tract E)
1.34 Ac.	Open Space/Trail Tracts (Tracts A, B, C, D, F, G, H and I)
19.41 Ac.	2.5 Ac. lots (Rural Lots 1-6 incl. adj. ROW)
12.95 Ac.	1.0 Ac. lots (Rural Lots 7-14 and 31-33 incl. adj. ROW)
8.05 Ac.	0.5 Ac. avg. Lots (Urban Lots 15-30 incl adj. ROW)
44.35 Ac.	**Total**

The percent imperviousness for this subdivision is calculated as follows:

Fees for Sand Creek Drainage Corridor

(Per El Paso County Percent Impervious Chart: 2**%**)

2.60 Ac. x 2% = **0.052 Impervious Ac.**

Fees for Open Space/Trail Tracts

(Per El Paso County Percent Impervious Chart: 7**%**)

1.34 Ac. x 7% = **0.09 Impervious Ac.**

Fees for 2.5 Ac. lots

(Per El Paso County Percent Impervious Chart: 11**%** with 25% fee reduction for 2.5 ac. lots planned – ECM 3.10.2a) – *Reduction for Drainage Fees only*

19.41 Ac. x 11% x 75% = **1.60 Impervious Ac.** (Drainage Fees)

19.41 Ac. x 11% = **2.14 Impervious Ac.** (Bridge Fees)

Fees for 1.0 Ac. lots

(Per El Paso County Percent Impervious Chart: 30**%**)

12.95 Ac. x 20% = **2.59 Impervious Ac.**

Fees for 1/2 Ac. lots

(Per El Paso County Percent Impervious Chart: 25**%**)

8.05 Ac. x 25% = **2.01 Impervious Ac.**

Total Impervious Acreage: **6.34 Imp. Ac.** (Drainage Fees)

Total Impervious Acreage: **6.88 Imp. Ac.** (Bridge Fees)

The following calculations are based on the 2022 Sand Creek drainage/bridge fees:

ESTIMATED FEE TOTALS:

Bridge Fees

$ 8,923.00 x 6.88 Impervious Ac.	=	**$ 61,390.24**

Drainage Fees

$ 21,814.00 x 6.34 Impervious Ac.	=	**$ 138,300.76**

However, per the ECM 3.10.5.a, this development requests a reduction of drainage fees based on the on-site regional channel improvements for this stretch of Sand Creek Reach SC-9 as shown in the DBPS. The following facilities within the Sand Creek Drainage Basin seem to meet the criteria for this reduction:

Proposed Filing No. 3 Sand Creek Channel Improvements:

Sheet Pile Check Structure w/ Conc. Cap	$45,000 EA x 1 =	$ 45,000
Selective Bank Stabilization (Buried Rip-Rap)	$100/LF x 270 LF =	$ 27,000
Selective Bank Stabilization (Grading & Reveg.)	=	$ 80,000
Sub-Total	=	$152,000
10 % Engineering		$ 15,200
Total		$167,200

Classic Consulting Engineers & Surveyors cannot and does not guarantee that the construction cost will not vary from these opinions of probable construction costs. These opinions represent our best judgment as design professionals familiar with the construction industry and this development in particular.

(Exact facility costs provided upon construction and acceptance by County. Any credits may be used within the Sand Creek basin)

In order to ascertain the current drainage fee versus reimbursable drainage facility obligations, the Sand Creek Drainage Basin Planning Study (Kiowa Engineering Corporations, dated March 1996) was consulted.

For the TimberRidge Filing No. 3, the reimbursable drainage facilities identified in the DBPS are as follows:

Item	Location	1992 Cost	2021 Cost (adjusted)
Check Structure	std. 890+50 (reach SC-9)	$14,400	$40,103.91
Check Structure	std. 907+100 (reach SC-9)	$15,300	$42,610.00
	Total Reimbursable / Improvements		$82,713.91
	10% Engineering		$ 8,271.39
	5% Contingency		$ 4,135.70
	Total		$95,121.00

Until actual construction costs are vetted or additional improvements are approved in a DBPS amendment, the $95,121.00 can offset the total drainage fees shown above as $138,300.76. **Thus, the total current drainage fees owed for Filing No. 3 is $43,179.76.**

As it pertains to Bridge fees, the Sand Creek DBPS indicates, "Bridges are defined as those structures conveying at least 1500 cubic feet per second, having a flow area of at least 200 square feet, or having a span of 20 feet or greater." The DBPS reflects the Arroya Lane crossing as "new 6' x 12" W CBC – 10 Year capacity". Similar to the Poco crossing, a 100-yr conveyance has been provided on Arroya Lane due to the roadways anticipated easterly extension and connection to future communities. The Arroya Lane crossing meets all of the three thresholds

established in the DBPS to define it as a bridge (essentially the same as the Poco crossing). The Poco crossing (constructed with Filing No. 1) exceeded $1,000,000 in costs and therefor since similarly sized, the Arroya crossing will be similar. While bridge fees were already paid in Filing No. 1 and Filing No. 2, we'd respectfully request that bridge fees not be collected for Filing No. 3 based on the required construction of the Arroya Lane bridge crossing and anticipated costs well exceeding the bridge costs shown above.

In summary, we feel that the following drainage and bridge fees should be collected with prior to the recording of Retreat at TimberRidge Filing No. 3:

ADJUSTED FEE TOTALS:

Bridge Fees

$61,390.24 (offset by Arroya bridge construction) = **No Bridge fees due**

Drainage Fees

$ 138,300.76 – 95,121.00 (Improvements in DBPS) = **$ 43,179.76**

SUMMARY

The proposed Retreat at TimberRidge Filing No. 3 is within the Sand Creek Drainage Basin. Recommendations are made within this report concerning necessary improvements that will be required as a result of development of this property. The points of storm water release from the proposed site are required to be at or below the calculated historic flow quantities. The development of the proposed site does not significantly impact any downstream facility or property to an extent greater than that which currently exists in the pre-development conditions. All drainage facilities within this report were sized according to the Drainage Criteria Manuals and the full-spectrum storm water quality requirements.

PREPARED BY:

Classic Consulting Engineers & Surveyors, LLC

Marc A. Whorton, P.E.
Project Manager

maw/118530/FDR Fil. 3.doc

REFERENCES

1. City of Colorado Springs/County of El Paso Drainage Criteria Manual as revised in November 1991 and October 1994 with County adopted Chapter 6 and Section 3.2.1 of Chapter 13 of the City of Colorado Springs/El Paso County Drainage Criteria Manual as revised in May 2014.

2. "Urban Storm Drainage Criteria Manual Volume 1, 2 & 3" Urban Drainage and Flood Control District, dated January 2016.

3. "Final Drainage Report for Forest Gate Subdivision" Law & Mariotti Consultants, Inc. dated October 2004.

4. "Sand Creek Drainage Basin Planning Study," Kiowa Engineering Corporation, dated March 1996.

5. "Master Development Drainage Plan for The Retreat at TimberRidge", Classic Consulting, approved March 2018.

6. "Preliminary Drainage Report for The Retreat at TimberRidge Preliminary Plan – South of Arroya Lane", Classic Consulting, approved October 2018.

7. "2018 Sterling Ranch MDDP", M&S Civil Consultants, Inc., June 2018

8. "Final Drainage Report for Retreat at TimberRidge Filing No. 1", Classic Consulting, approved November, 2020.

9. "Final Drainage Report for Retreat at TimberRidge Filing No. 2", Classic Consulting, approved September, 2022.

APPENDIX

VICINITY MAP

RETREAT AT TIMBERRIDGE
FILING NO. 3

VICINITY MAP

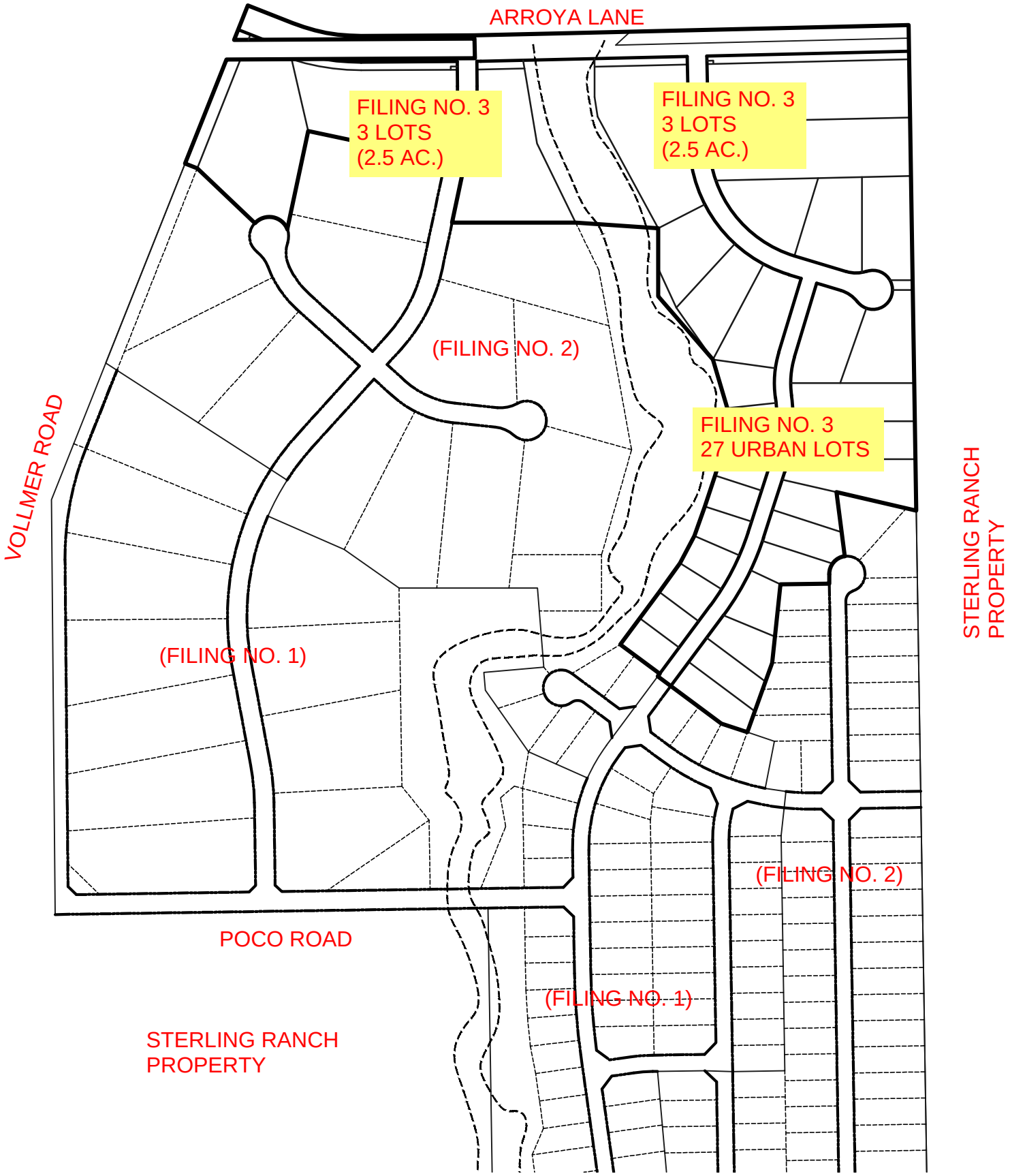

SOILS MAP (S.C.S SURVEY)

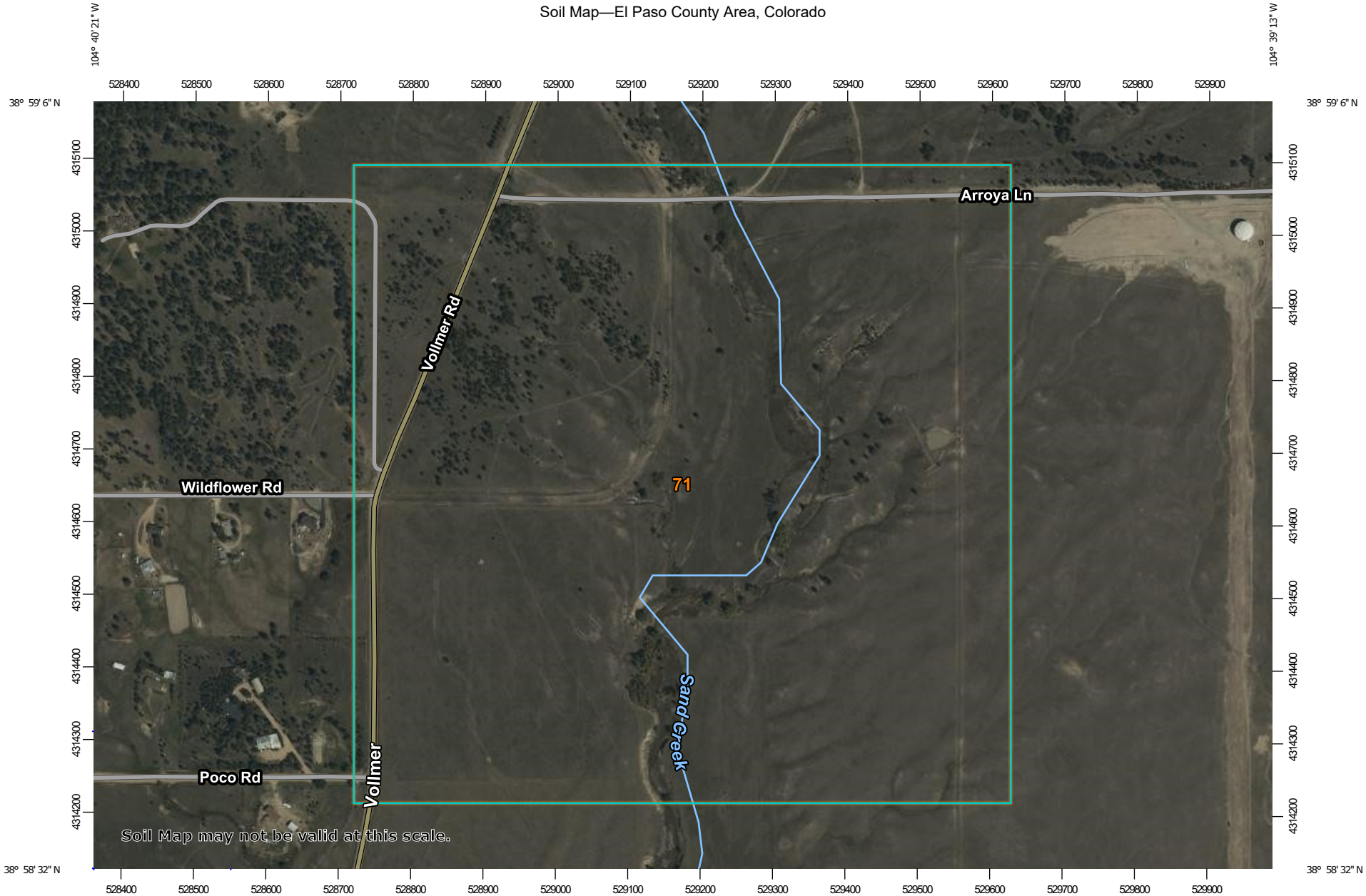

Map Scale: 1:7,450 if printed on A landscape (11" x 8.5") sheet.

N

Meters: 0 100 200 400 600

Feet: 0 350 700 1400 2100

Map projection: Web Mercator Corner coordinates: WGS84 Edge tics: UTM Zone 13N WGS84

MAP LEGEND

Area of Interest (AOI)

Area of Interest (AOI)

Soils

Soil Map Unit Polygons

Soil Map Unit Lines

Soil Map Unit Points

Special Point Features

Blowout

Borrow Pit

Clay Spot

Closed Depression

Gravel Pit

Gravelly Spot

Landfill

Lava Flow

Marsh or swamp

Mine or Quarry

Miscellaneous Water

Perennial Water

Rock Outcrop

Saline Spot

Sandy Spot

Severely Eroded Spot

Sinkhole

Slide or Slip

Sodic Spot

Spoil Area

Stony Spot

Very Stony Spot

Wet Spot

Other

Special Line Features

Water Features

Streams and Canals

Transportation

Rails

Interstate Highways

US Routes

Major Roads

Local Roads

Background

Aerial Photography

MAP INFORMATION

The soil surveys that comprise your AOI were mapped at 1:24,000.

Warning: Soil Map may not be valid at this scale.

Enlargement of maps beyond the scale of mapping can cause misunderstanding of the detail of mapping and accuracy of soil line placement. The maps do not show the small areas of contrasting soils that could have been shown at a more detailed scale.

Please rely on the bar scale on each map sheet for map measurements.

Source of Map: Natural Resources Conservation Service
Web Soil Survey URL:
Coordinate System: Web Mercator (EPSG:3857)

Maps from the Web Soil Survey are based on the Web Mercator projection, which preserves direction and shape but distorts distance and area. A projection that preserves area, such as the Albers equal-area conic projection, should be used if more accurate calculations of distance or area are required.

This product is generated from the USDA-NRCS certified data as of the version date(s) listed below.

Soil Survey Area: El Paso County Area, Colorado
Survey Area Data: Version 19, Aug 31, 2021

Soil map units are labeled (as space allows) for map scales 1:50,000 or larger.

Date(s) aerial images were photographed: Sep 11, 2018—Oct 20, 2018

The orthophoto or other base map on which the soil lines were compiled and digitized probably differs from the background imagery displayed on these maps. As a result, some minor shifting of map unit boundaries may be evident.

Map Unit Legend

Map Unit Symbol	Map Unit Name	Acres in AOI	Percent of AOI
71	Pring coarse sandy loam, 3 to 8 percent slopes	197.8	100.0%
Totals for Area of Interest		**197.8**	**100.0%**

El Paso County Area, Colorado

71—Pring coarse sandy loam, 3 to 8 percent slopes

Map Unit Setting

National map unit symbol: 369k
Elevation: 6,800 to 7,600 feet
Farmland classification: Not prime farmland

Map Unit Composition

Pring and similar soils: 85 percent
Estimates are based on observations, descriptions, and transects of the mapunit.

Description of Pring

Setting

Landform: Hills
Landform position (three-dimensional): Side slope
Down-slope shape: Linear
Across-slope shape: Linear
Parent material: Arkosic alluvium derived from sedimentary rock

Typical profile

A - 0 to 14 inches: coarse sandy loam
C - 14 to 60 inches: gravelly sandy loam

Properties and qualities

Slope: 3 to 8 percent
Depth to restrictive feature: More than 80 inches
Drainage class: Well drained
Runoff class: Low
Capacity of the most limiting layer to transmit water (Ksat): High (2.00 to 6.00 in/hr)
Depth to water table: More than 80 inches
Frequency of flooding: None
Frequency of ponding: None
Available water supply, 0 to 60 inches: Low (about 6.0 inches)

Interpretive groups

Land capability classification (irrigated): None specified
Land capability classification (nonirrigated): 3e
Hydrologic Soil Group: B
Ecological site: R048AY222CO - Loamy Park
Hydric soil rating: No

Minor Components

Pleasant

Percent of map unit:
Landform: Depressions
Hydric soil rating: Yes

Other soils

Percent of map unit:
Hydric soil rating: No

Data Source Information

Soil Survey Area: El Paso County Area, Colorado
Survey Area Data: Version 19, Aug 31, 2021

F.E.M.A. MAP / LOMR (08-08-0541P)

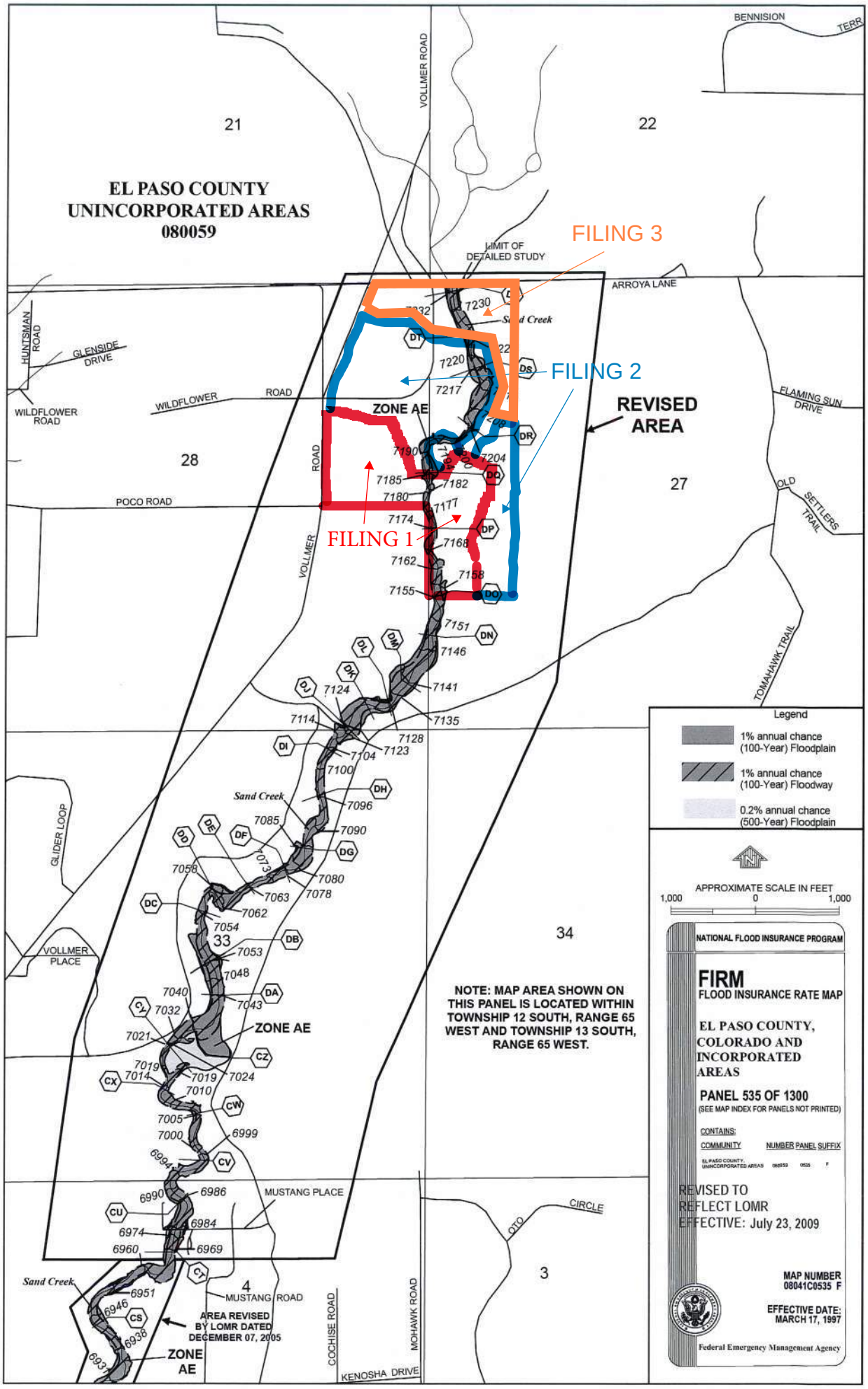
EL PASO COUNTY
UNINCORPORATED AREAS
080059
FILING 3
FILING 2
FILING 1
REVISED AREA
ZONE AE
LIMIT OF DETAILED STUDY
ARROYA LANE
BENNISION TERR
VOLLMER ROAD
HUNTSMAN ROAD
GLENSIDE DRIVE
WILDFLOWER ROAD
WILDFLOWER ROAD
POCO ROAD
FLAMING SUN DRIVE
OLD SETTLERS TRAIL
TOMAHAWK TRAIL
GLIDER LOOP
VOLLMER PLACE
MUSTANG PLACE
MUSTANG ROAD
COCHISE ROAD
MOHAWK ROAD
KENOSHA DRIVE
OTO CIRCLE
Sand Creek
21
22
27
28
33
34
3
4
AREA REVISED BY LOMR DATED DECEMBER 07, 2005
NOTE: MAP AREA SHOWN ON THIS PANEL IS LOCATED WITHIN TOWNSHIP 12 SOUTH, RANGE 65 WEST AND TOWNSHIP 13 SOUTH, RANGE 65 WEST.
Legend
1% annual chance (100-Year) Floodplain
1% annual chance (100-Year) Floodway
0.2% annual chance (500-Year) Floodplain
APPROXIMATE SCALE IN FEET
1,000 0 1,000
NATIONAL FLOOD INSURANCE PROGRAM
FIRM
FLOOD INSURANCE RATE MAP
EL PASO COUNTY, COLORADO AND INCORPORATED AREAS
PANEL 535 OF 1300
(SEE MAP INDEX FOR PANELS NOT PRINTED)
CONTAINS:
COMMUNITY NUMBER PANEL SUFFIX
EL PASO COUNTY, UNINCORPORATED AREAS 080059 0535 F
REVISED TO REFLECT LOMR EFFECTIVE: July 23, 2009
MAP NUMBER 08041C0535 F
EFFECTIVE DATE: MARCH 17, 1997
Federal Emergency Management Agency

NOTES TO USERS

This map is for use in administering the National Flood Insurance Program. It does not necessarily identify all areas subject to flooding, particularly from local drainage sources of small size. The community map repository should be consulted for possible updated or additional flood hazard information.

To obtain more detailed information in areas where **Base Flood Elevations** (BFEs) and/or **floodways** have been determined, users are encouraged to consult the Flood Profiles and Floodway Data and/or Summary of Stillwater Elevations tables contained within the Flood Insurance Study (FIS) report that accompanies this FIRM. Users should be aware that BFEs shown on the FIRM represent rounded whole-foot elevations. These BFEs are intended for flood insurance rating purposes only and should not be used as the sole source of flood elevation information. Accordingly, flood elevation data presented in the FIS report should be utilized in conjunction with the FIRM for purposes of construction and/or floodplain management.

Coastal Base Flood Elevations shown on this map apply only landward of 0.0' North American Vertical Datum of 1988 (NAVD88). Users of this FIRM should be aware that coastal flood elevations are also provided in the Summary of Stillwater Elevations table in the Flood Insurance Study report for this jurisdiction. Elevations shown in the Summary of Stillwater Elevations table should be used for construction and/or floodplain management purposes when they are higher than the elevations shown on this FIRM.

Boundaries of the **floodways** were computed at cross sections and interpolated between cross sections. The floodways were based on hydraulic considerations with regard to requirements of the National Flood Insurance Program. Floodway widths and other pertinent floodway data are provided in the Flood Insurance Study report for this jurisdiction.

Certain areas not in Special Flood Hazard Areas may be protected by **flood control structures**. Refer to section 2.4 "Flood Protection Measures" of the Flood Insurance Study report for information on flood control structures for this jurisdiction.

The **projection** used in the preparation of this map was Universal Transverse Mercator (UTM) zone 13. The **horizontal datum** was NAD83, GRS80 spheroid. Differences in datum, spheroid, projection or UTM zones zones used in the production of FIRMs for adjacent jurisdictions may result in slight positional differences in map features across jurisdiction boundaries. These differences do not **affect the accuracy** of this FIRM.

Flood elevations on this map are referenced to the **North American Vertical Datum of 1988 (NAVD88)**. These flood elevations must be compared to structure and ground elevations referenced to the same **vertical datum**. For information regarding conversion between the National Geodetic Vertical Datum of 1929 and the North American Vertical Datum of 1988, visit the National Geodetic Survey website at http://www.ngs.noaa.gov/ or contact the National Geodetic Survey at the following address:

NGS Information Services
NOAA, N/NGS12
National Geodetic Survey
SSMC-3, #9202
1315 East-West Highway
Silver Spring, MD 20910-3282

To obtain current elevation, description, and/or location information for **bench marks** shown on this map, please contact the Information Services Branch of the National Geodetic Survey at (301) 713-3242 or visit its website at http://www.ngs.noaa.gov/.

Base Map information shown on this FIRM was provided in digital format by El Paso County, Colorado Springs Utilities, and Anderson Consulting Engineers, Inc. These data are current as of 2006.

This map reflects more detailed and up-to-date **stream channel configurations** and **floodplain delineations** than those shown on the previous FIRM for this jurisdiction. The floodplains and floodways that were transferred from the previous FIRM may have been adjusted to conform to these new stream channel configurations. As a result, the Flood Profiles and Floodway Data tables in the Flood Insurance Study Report (which contains authoritative hydraulic data) may reflect stream channel distances that differ from what is shown on this map. The profile baselines depicted on this map represent the hydraulic modeling baselines that match the flood profiles and Floodway Data Tables if applicable, in the FIS report. As a result, the profile baselines may deviate significantly from the new base map channel representation and may appear outside of the floodplain.

Corporate limits shown on this map are based on the best data available at the time of publication. Because changes due to annexations or de-annexations may have occurred after this map was published, map users should contact appropriate community officials to verify current corporate limit locations.

Please refer to the separately printed **Map Index** for an overview map of the county showing the layout of map panels; community map repository addresses; and a Listing of Communities table containing National Flood Insurance Program dates for each community as well as a listing of the panels on which each community is located.

Contact **FEMA Map Service Center** (MSC) via the FEMA Map Information eXchange (FMIX) 1-877-336-2627 for information on available products associated with this FIRM. Available products may include previously issued Letters of Map Change, a Flood Insurance Study Report, and/or digital versions of this map. The MSC may also be reached by Fax at 1-800-358-9620 and its website at http://www.msc.fema.gov/.

If you have **questions about this map** or questions concerning the National Flood Insurance Program in general, please call **1-877-FEMA MAP** (1-877-336-2627) or visit the FEMA website at http://www.fema.gov/business/nfip.

El Paso County Vertical Datum Offset Table

Flooding Source	Vertical Datum Offset (ft)
REFER TO SECTION 3.3 OF THE EL PASO COUNTY FLOOD INSURANCE STUDY FOR STREAM BY STREAM VERTICAL DATUM CONVERSION INFORMATION	

Panel Location Map

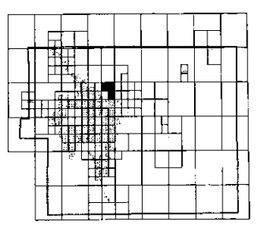

This Digital Flood Insurance Rate Map (DFIRM) was produced through a Cooperating Technical Partner (CTP) agreement between the State of Colorado Water Conservation Board (CWCB) and the Federal Emergency Management Agency (FEMA).

Additional Flood Hazard information and resources are available from local communities and the Colorado Water Conservation Board.

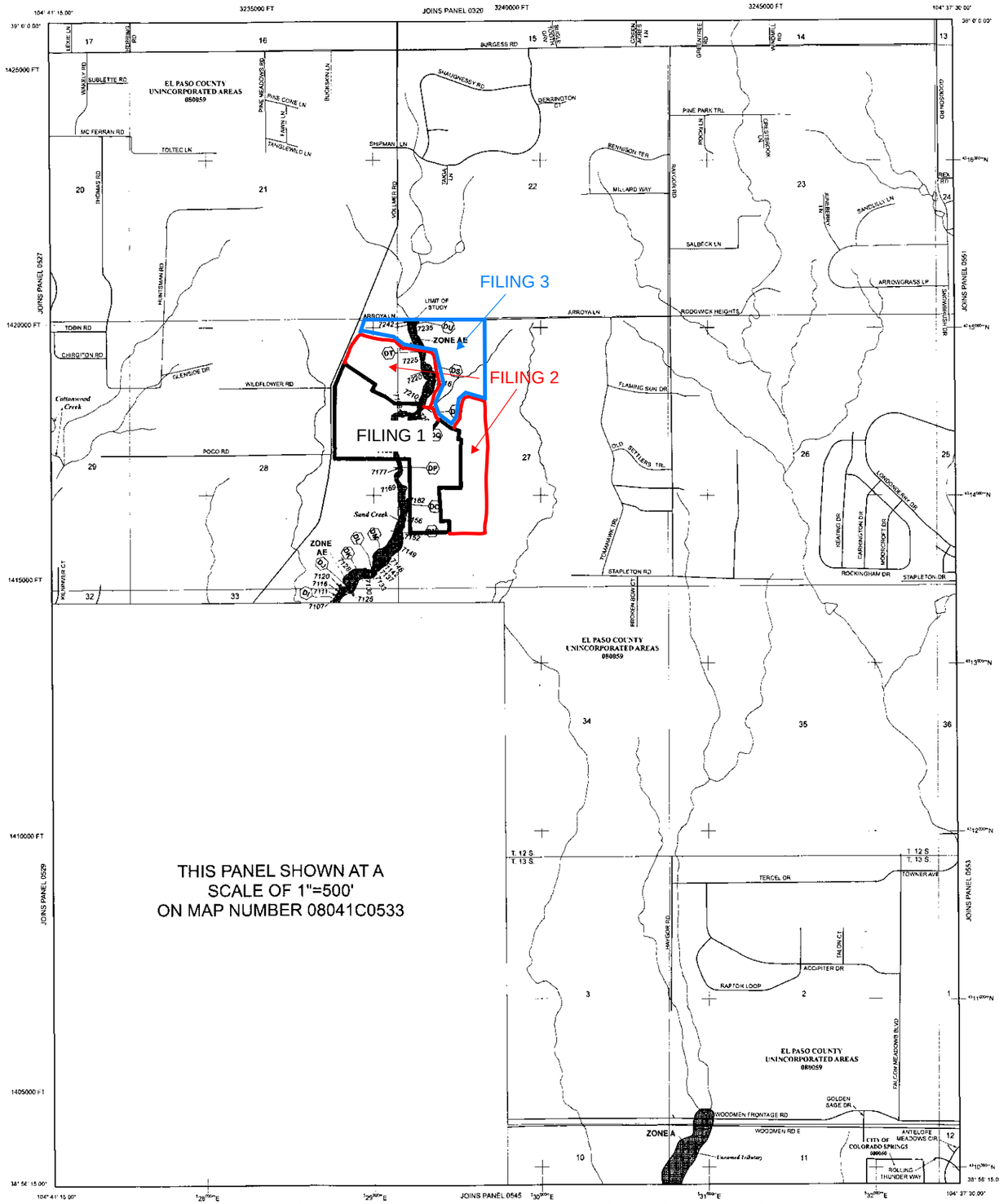

NOTE: MAP AREA SHOWN ON THIS PANEL IS LOCATED WITHIN TOWNSHIP 12 SOUTH, RANGE 65 WEST, AND TOWNSHIP 13 SOUTH, RANGE 65 WEST.

LEGEND

SPECIAL FLOOD HAZARD AREAS (SFHAS) SUBJECT TO INUNDATION BY THE 1% ANNUAL CHANCE FLOOD

The 1% annual chance flood (100-year flood), also known as the base flood, is the flood that has a 1% chance of being equaled or exceeded in any given year. The Special Flood Hazard Area is the area subject to flooding by the 1% annual chance flood. Areas of Special Flood Hazard include Zones A, AE, AH, AO, AR, A99, V, and VE. The Base Flood Elevation is the water-surface elevation of the 1% annual chance flood.

ZONE A	No Base Flood Elevations determined.
ZONE AE	Base Flood Elevations determined.
ZONE AH	Flood depths of 1 to 3 feet (usually areas of ponding); Base Flood Elevations determined.
ZONE AO	Flood depths of 1 to 3 feet (usually sheet flow on sloping terrain); average depths determined. For areas of alluvial fan flooding, velocities also determined.
ZONE AR	Special Flood Hazard Area formerly protected from the 1% annual chance flood by a flood control system that was subsequently decertified. Zone AR indicates that the former flood control system is being restored to provide protection from the 1% annual chance or greater flood.
ZONE A99	Area to be protected from 1% annual chance flood by a Federal flood protection system under construction; no Base Flood Elevations determined.
ZONE V	Coastal flood zone with velocity hazard (wave action); no Base Flood Elevations determined.
ZONE VE	Coastal flood zone with velocity hazard (wave action); Base Flood Elevations determined.

FLOODWAY AREAS IN ZONE AE

The floodway is the channel of a stream plus any adjacent floodplain areas that must be kept free of encroachment so that the 1% annual chance flood can be carried without substantial increases in flood heights.

OTHER FLOOD AREAS

ZONE X	Areas of 0.2% annual chance flood; areas of 1% annual chance flood with average depths of less than 1 foot or with drainage areas less than 1 square mile; and areas protected by levees from 1% annual chance flood.

OTHER AREAS

ZONE X	Areas determined to be outside the 0.2% annual chance floodplain.
ZONE D	Areas in which flood hazards are undetermined, but possible.

COASTAL BARRIER RESOURCES SYSTEM (CBRS) AREAS

OTHERWISE PROTECTED AREAS (OPAs)

CBRS areas and OPAs are normally located within or adjacent to Special Flood Hazard Areas.

	Floodplain boundary
	Floodway boundary
	Zone D Boundary
	CBRS and OPA boundary
	Boundary dividing Special Flood Hazard Areas of different Base Flood Elevations, flood depths or flood velocities.
513 (EL 987)	Base Flood Elevation line and value; elevation in feet*
	Base Flood Elevation value where uniform within zone; elevation in feet*

* Referenced to the North American Vertical Datum of 1988 (NAVD 88)

A — A	Cross section line
23 - - - - 23	Transect line
87° 07' 30.00" 39° 27' 30.00"	Geographic coordinates referenced to the North American Datum of 1983 (NAD 83)
4275000mN	1000-meter Universal Transverse Mercator grid ticks, zone 13
6000000 FT	5000-foot grid ticks: Colorado State Plane coordinate system, central zone (FIPSZONE 0502), Lambert Conformal Conic Projection
DX5510 ×	Bench mark (see explanation in Notes to Users section of this FIRM panel)
• M1.5	River Mile

MAP REPOSITORIES
Refer to Map Repositories list on Map Index

EFFECTIVE DATE OF COUNTYWIDE
FLOOD INSURANCE RATE MAP
MARCH 17, 1997

EFFECTIVE DATE(S) OF REVISION(S) TO THIS PANEL
DECEMBER 7, 2018 - to update corporate limits, to change Base Flood Elevations and Special Flood Hazard Areas, to update map format, to add roads and road names, and to incorporate previously issued Letters of Map Revision.

For community map revision history prior to countywide mapping, refer to the Community Map History Table located in the Flood Insurance Study report for this jurisdiction.

To determine if flood insurance is available in this community, contact your insurance agent or call the National Flood Insurance Program at 1-800-638-6620.

MAP SCALE 1" = 1000'

500 0 1000 2000 FEET

300 0 300 600 METERS

NFIP

NATIONAL FLOOD INSURANCE PROGRAM

PANEL 0535G

FIRM
FLOOD INSURANCE RATE MAP
EL PASO COUNTY, COLORADO
AND INCORPORATED AREAS

PANEL 535 OF 1300

(SEE MAP INDEX FOR FIRM PANEL LAYOUT)

CONTAINS:

COMMUNITY	NUMBER	PANEL	SUFFIX
COLORADO SPRINGS, CITY OF	080060	0535	G
EL PASO COUNTY	080059	0535	G

Notice to User: The Map Number shown below should be used when placing map orders; the Community Number shown above should be used on insurance applications for the subject community.

MAP NUMBER
08041C0535G

MAP REVISED
DECEMBER 7, 2018

Federal Emergency Management Agency

Federal Emergency Management Agency

Washington, D.C. 20472

LETTER OF MAP REVISION DETERMINATION DOCUMENT

COMMUNITY AND REVISION INFORMATION		PROJECT DESCRIPTION	BASIS OF REQUEST
COMMUNITY	El Paso County Colorado (Unincorporated Areas)	NO PROJECT	HYDRAULIC ANALYSIS NEW TOPOGRAPHIC DATA
	COMMUNITY NO.: 080059		
IDENTIFIER	Sand Creek Letter of Map Revision, Mustang Place to Arroya Lane	APPROXIMATE LATITUDE & LONGITUDE: 38.971, -104.668 SOURCE: USGS QUADRANGLE DATUM: NAD 27	

ANNOTATED MAPPING ENCLOSURES	ANNOTATED STUDY ENCLOSURES
TYPE: FIRM* NO.: 08041C0535 F DATE: March 17, 1997	DATE OF EFFECTIVE FLOOD INSURANCE STUDY: August 23, 1999 PROFILE(S): 204P(a), 204P(b), 204P(c) AND 204P(d) FLOODWAY DATA TABLE: 5

Enclosures reflect changes to flooding sources affected by this revision.
* FIRM - Flood Insurance Rate Map; ** FBFM - Flood Boundary and Floodway Map; *** FHBM - Flood Hazard Boundary Map

FLOODING SOURCE(S) & REVISED REACH(ES)

Sand Creek - from approximately 360 feet downstream of Mustang Place to just downstream of Arroya Lane

SUMMARY OF REVISIONS

Flooding Source	Effective Flooding	Revised Flooding	Increases	Decreases
Sand Creek	Zone A	Zone AE	YES	YES
	No BFEs*	BFEs	YES	NONE
	No Floodway	Floodway	YES	NONE

* BFEs - Base Flood Elevations

DETERMINATION

This document provides the determination from the Department of Homeland Security's Federal Emergency Management Agency (FEMA) regarding a request for a Letter of Map Revision (LOMR) for the area described above. Using the information submitted, we have determined that a revision to the flood hazards depicted in the Flood Insurance Study (FIS) report and/or National Flood Insurance Program (NFIP) map is warranted. This document revises the effective NFIP map, as indicated in the attached documentation. Please use the enclosed annotated map panels revised by this LOMR for floodplain management purposes and for all flood insurance policies and renewals in your community.

This determination is based on the flood data presently available. The enclosed documents provide additional information regarding this determination. If you have any questions about this document, please contact the FEMA Map Assistance Center toll free at 1-877-336-2627 (1-877-FEMA MAP) or by letter addressed to the LOMR Depot, 3601 Eisenhower Avenue, Alexandria, VA 22304. Additional Information about the NFIP is available on our website at http://www.fema.gov/nfip.

David N. Bascom

David N. Bascom, Program Specialist
Engineering Management Branch
Mitigation Directorate

Federal Emergency Management Agency
Washington, D.C. 20472

LETTER OF MAP REVISION
DETERMINATION DOCUMENT (CONTINUED)

COMMUNITY INFORMATION

APPLICABLE NFIP REGULATIONS/COMMUNITY OBLIGATION

We have made this determination pursuant to Section 206 of the Flood Disaster Protection Act of 1973 (P.L. 93-234) and in accordance with the National Flood Insurance Act of 1968, as amended (Title XIII of the Housing and Urban Development Act of 1968, P.L. 90-448), 42 U.S.C. 4001-4128, and 44 CFR Part 65. Pursuant to Section 1361 of the National Flood Insurance Act of 1968, as amended, communities participating in the NFIP are required to adopt and enforce floodplain management regulations that meet or exceed NFIP criteria. These criteria, including adoption of the FIS report and FIRM, and the modifications made by this LOMR, are the minimum requirements for continued NFIP participation and do not supersede more stringent State/Commonwealth or local requirements to which the regulations apply.

We provide the floodway designation to your community as a tool to regulate floodplain development. Therefore, the floodway revision we have described in this letter, while acceptable to us, must also be acceptable to your community and adopted by appropriate community action, as specified in Paragraph 60.3(d) of the NFIP regulations.

COMMUNITY REMINDERS

We based this determination on the 1-percent-annual-chance flood discharges computed in the FIS for your community without considering subsequent changes in watershed characteristics that could increase flood discharges. Future development of projects upstream could cause increased flood discharges, which could cause increased flood hazards. A comprehensive restudy of your community's flood hazards would consider the cumulative effects of development on flood discharges subsequent to the publication of the FIS report for your community and could, therefore, establish greater flood hazards in this area.

Your community must regulate all proposed floodplain development and ensure that permits required by Federal and/or State/Commonwealth law have been obtained. State/Commonwealth or community officials, based on knowledge of local conditions and in the interest of safety, may set higher standards for construction or may limit development in floodplain areas. If your State/Commonwealth or community has adopted more restrictive or comprehensive floodplain management criteria, those criteria take precedence over the minimum NFIP requirements.

We will not print and distribute this LOMR to primary users, such as local insurance agents or mortgage lenders; instead, the community will serve as a repository for the new data. We encourage you to disseminate the information in this LOMR by preparing a news release for publication in your community's newspaper that describes the revision and explains how your community will provide the data and help interpret the NFIP maps. In that way, interested persons, such as property owners, insurance agents, and mortgage lenders, can benefit from the information.

This determination is based on the flood data presently available. The enclosed documents provide additional information regarding this determination. If you have any questions about this document, please contact the FEMA Map Assistance Center toll free at 1-877-336-2627 (1-877-FEMA MAP) or by letter addressed to the LOMR Depot, 3601 Eisenhower Avenue, Alexandria, VA 22304. Additional Information about the NFIP is available on our website at http://www.fema.gov/nfip.

David N. Bascom

David N. Bascom, Program Specialist
Engineering Management Branch
Mitigation Directorate

Federal Emergency Management Agency
Washington, D.C. 20472

LETTER OF MAP REVISION
DETERMINATION DOCUMENT (CONTINUED)

We have designated a Consultation Coordination Officer (CCO) to assist your community. The CCO will be the primary liaison between your community and FEMA. For information regarding your CCO, please contact:

Ms. Jeanine D. Petterson
Director, Mitigation Division
Federal Emergency Management Agency, Region VIII
Denver Federal Center, Building 710
P.O. Box 25267
Denver, CO 80225-0267
(303) 235-4830

STATUS OF THE COMMUNITY NFIP MAPS

We will not physically revise and republish the FIRM and FIS report for your community to reflect the modifications made by this LOMR at this time. When changes to the previously cited FIRM panel(s) and FIS report warrant physical revision and republication in the future, we will incorporate the modifications made by this LOMR at that time.

This determination is based on the flood data presently available. The enclosed documents provide additional information regarding this determination. If you have any questions about this document, please contact the FEMA Map Assistance Center toll free at 1-877-336-2627 (1-877-FEMA MAP) or by letter addressed to the LOMR Depot, 3601 Eisenhower Avenue, Alexandria, VA 22304. Additional Information about the NFIP is available on our website at http://www.fema.gov/nfip.

David N. Bascom, Program Specialist
Engineering Management Branch
Mitigation Directorate

Federal Emergency Management Agency

Washington, D.C. 20472

LETTER OF MAP REVISION
DETERMINATION DOCUMENT (CONTINUED)

PUBLIC NOTIFICATION OF REVISION

PUBLIC NOTIFICATION

FLOODING SOURCE	LOCATION OF REFERENCED ELEVATION	BFE (FEET NGVD 29)		MAP PANEL NUMBER(S)
		EFFECTIVE	REVISED	
Sand Creek	Just upstream of Mustang Place	None	6,984	08041C0535 F
	Just downstream of Arroya Lane	None	7,238	08041C0535 F

Within 90 days of the second publication in the local newspaper, a citizen may request that we reconsider this determination. Any request for reconsideration must be based on scientific or technical data. Therefore, this letter will be effective only after the 90-day appeal period has elapsed and we have resolved any appeals that we receive during this appeal period. Until this LOMR is effective, the revised BFEs presented in this LOMR may be changed.

A notice of changes will be published in the *Federal Register*. A short notice also will be published in your local newspaper on or about the dates listed below. Please refer to FEMA's website at https://www.floodmaps.fema.gov/fhm/Scripts/bfe_main.asp for a more detailed description of proposed BFE changes, which will be posted within a week of the date of this letter.

LOCAL NEWSPAPER Name: *El Paso County News*
Dates: 03/18/09 03/25/09

This determination is based on the flood data presently available. The enclosed documents provide additional information regarding this determination. If you have any questions about this document, please contact the FEMA Map Assistance Center toll free at 1-877-336-2627 (1-877-FEMA MAP) or by letter addressed to the LOMR Depot, 3601 Eisenhower Avenue, Alexandria, VA 22304. Additional Information about the NFIP is available on our website at http://www.fema.gov/nfip.

David N. Bascom

David N. Bascom, Program Specialist
Engineering Management Branch
Mitigation Directorate

FLOODING SOURCE		FLOODWAY			BASE FLOOD WATER SURFACE ELEVATION			
CROSS SECTION	DISTANCE[1]	WIDTH (FEET)	SECTION AREA (SQUARE FEET)	MEAN VELOCITY (FEET PER SECOND)	REGULATORY	WITHOUT FLOODWAY	WITH FLOODWAY	INCREASE
						FEET (NGVD)		
Sand Creek (cont'd)								
CA	65,292	164	427	6.1	6,748.7	6,748.7	6,749.4	0.7
CB	66,092	41	223	11.7	6,761.2	6,761.2	6,762.2	1.0
CC	66,247	90	270	9.6	6,773.6	6,773.6	6,773.7	0.1
CD	67,647	50	218	11.9	6,782.6	6,782.6	6,783.3	0.7
CE	68,297	65	284	8.8	6,793.9	6,793.9	6,794.4	0.5
CF	69,147	50	213	11.7	6,804.5	6,804.5	6,804.5	0.0
CG	70,157	50	213	11.7	6,815.1	6,815.1	6,815.3	0.2
CH	70,577	205	347	7.2	6,823.9	6,823.9	6,824.5	0.6
CI	70,627	180	267	9.4	6,826.7	6,826.7	6,827.7	1.0
CJ	70,727	210	340	7.3	6,831.1	6,831.1	6,831.1	0.0
CK	70,807	195	334	7.5	6,832.5	6,832.5	6,832.5	0.0
CL	71,162	90	255	9.8	6,838.0	6,838.0	6,839.0	1.0
CM	71,977	226	503	5.2	6,847.4	6,847.4	6,848.3	0.9
CN	73,052	174	328	7.9	6,861.1	6,861.1	6,861.2	0.1
CO	73,644	237	364	7.1	6,870.2	6,870.2	6,870.2	0.0
CP	75,142	172	324	8.0	6,888.5	6,888.5	6,888.7	0.2
CQ	76,161	109	283	9.2	6,903.5	6,903.5	6,903.7	0.2
CR	77,846	100	272	9.6	6,926.1	6,926.1	6,926.7	0.6
CS	79,187	117	287	9.1	6,944.1	6,944.1	6,944.1	0.0
CT	80,808	142	310	8.4	6,969.2	6,969.2	6,969.2	0.0
CU	81,501	120	342	7.6	6,986.1	6,986.1	6,986.5	0.4
CV	82,281	124	295	8.8	6,997.4	6,997.4	6,997.4	0.0
CW	82,897	64	237	11.0	7,005.3	7,005.3	7,006.1	0.8
CX	83,517	90	266	9.8	7,013.9	7,013.9	7,013.9	0.0
CY	84,087	70	244	10.7	7,024.3	7,024.3	7,024.3	0.0
CZ	84,473	160	322	8.1	7,040.2	7,040.2	7,040.2	0.0

Revised Data From LOMR Dated Dec. 7, 2005

Revised Data

REVISED TO REFLECT LOMR EFFECTIVE: July 23, 2009

[1] Feet Above Confluence With Fountain Creek

TABLE 5

FEDERAL EMERGENCY MANAGEMENT AGENCY

EL PASO COUNTY, CO

AND INCORPORATED AREAS

FLOODWAY DATA

SAND CREEK

FLOODING SOURCE		FLOODWAY			BASE FLOOD WATER SURFACE ELEVATION			
CROSS SECTION	DISTANCE[1]	WIDTH (FEET)	SECTION AREA (SQUARE FEET)	MEAN VELOCITY (FEET PER SECOND)	REGULATORY	WITHOUT FLOODWAY	WITH FLOODWAY	INCREASE
						FEET (NGVD)		
Sand Creek (cont'd)								
DA	85,073	139	456	5.7	7,043.0	7,043.0	7,043.1	0.1
DB	85,483	170	328	7.9	7,053.4	7,053.4	7,053.5	0.1
DC	86,103	100	274	9.5	7,054.4	7,054.4	7,054.4	0.0
DD	86,673	197	434	6.0	7,061.7	7,061.7	7,062.0	0.3
DE	87,073	83	270	9.6	7,068.2	7,068.2	7,068.3	0.1
DF	87,573	98	325	8.0	7,077.7	7,077.7	7,077.9	0.2
DG	88,003	135	304	8.6	7,085.1	7,085.1	7,085.1	0.0
DH	88,738	89	263	9.9	7,096.9	7,096.9	7,096.9	0.0
DI	89,303	74	249	10.4	7,104.1	7,104.1	7,104.3	0.2
DJ	89,663	143	309	8.4	7,123.2	7,123.2	7,123.2	0.0
DK	90,058	140	426	6.1	7,125.1	7,125.1	7,125.2	0.1
DL	90,348	102	276	9.4	7,127.6	7,127.6	7,127.8	0.2
DM	90,698	300	398	6.5	7,141.0	7,141.0	7,141.0	0.0
DN	91,388	120	292	8.9	7,148.5	7,148.5	7,148.6	0.1
DO	91,868	105	313	8.3	7,155.2	7,155.2	7,155.9	0.7
DP	92,748	65	239	10.9	7,173.8	7,173.8	7,173.8	0.0
DQ	93,468	117	288	9.0	7,184.6	7,184.6	7,184.6	0.0
DR	94,448	81	260	10.0	7,204.5	7,204.5	7,204.6	0.1
DS	95,343	100	274	9.5	7,216.8	7,216.8	7,217.2	0.4
DT	95,723	77	252	10.3	7,224.2	7,224.2	7,224.3	0.1
DU	96,333	90	266	9.8	7,232.5	7,232.5	7,233.0	0.5

[1] Feet Above Confluence With Fountain Creek

REVISED TO REFLECT LOMR
EFFECTIVE: July 23, 2009

TABLE 5

FEDERAL EMERGENCY MANAGEMENT AGENCY
EL PASO COUNTY, CO
AND INCORPORATED AREAS

FLOODWAY DATA

SAND CREEK

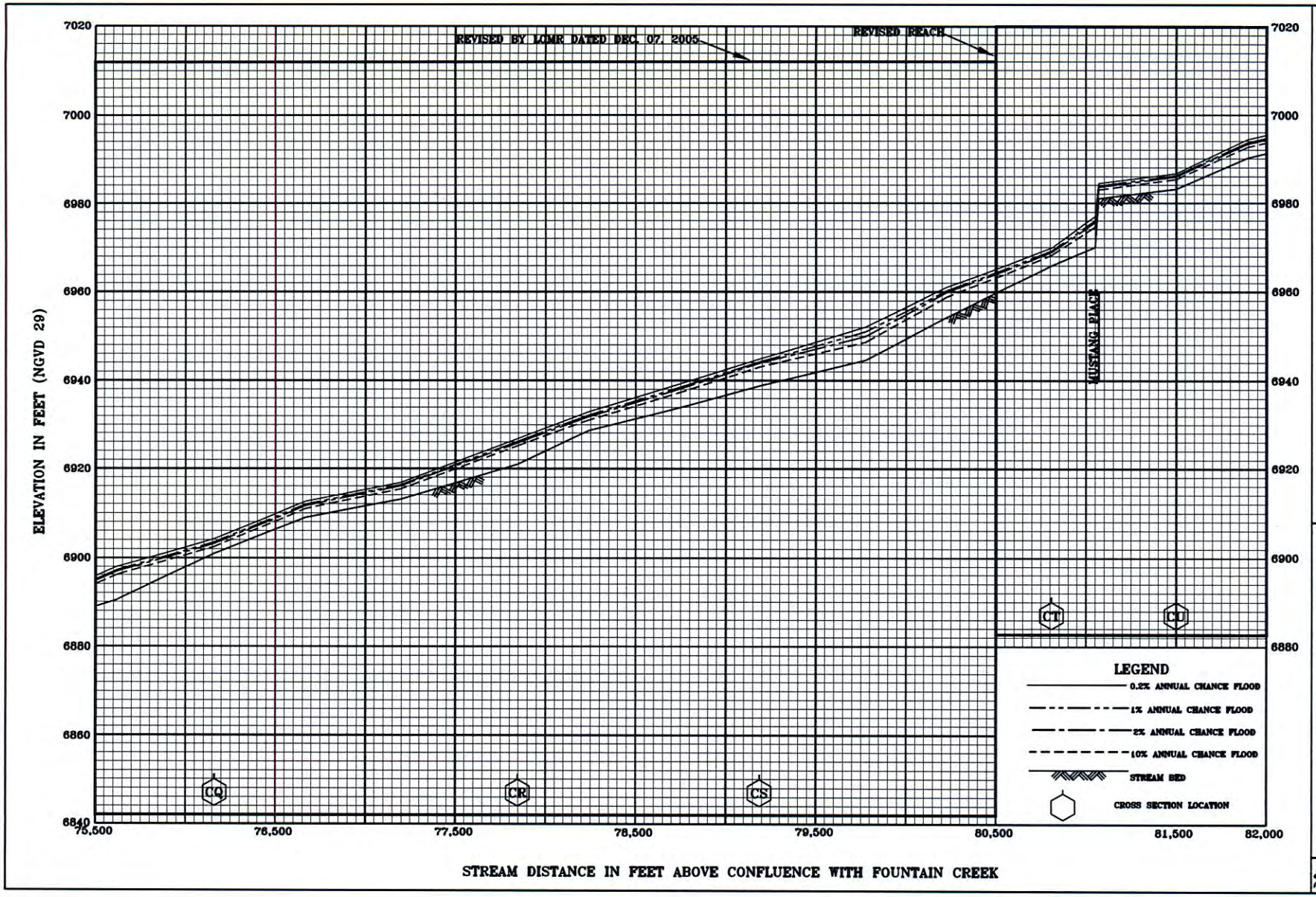

FLOOD PROFILES

REVISED TO
REFLECT LOMR
EFFECTIVE: July 23, 2009

SAND CREEK

FEDERAL EMERGENCY MANAGEMENT AGENCY

EL PASO COUNTY, CO
AND INCORPORATED AREAS

204P(a)

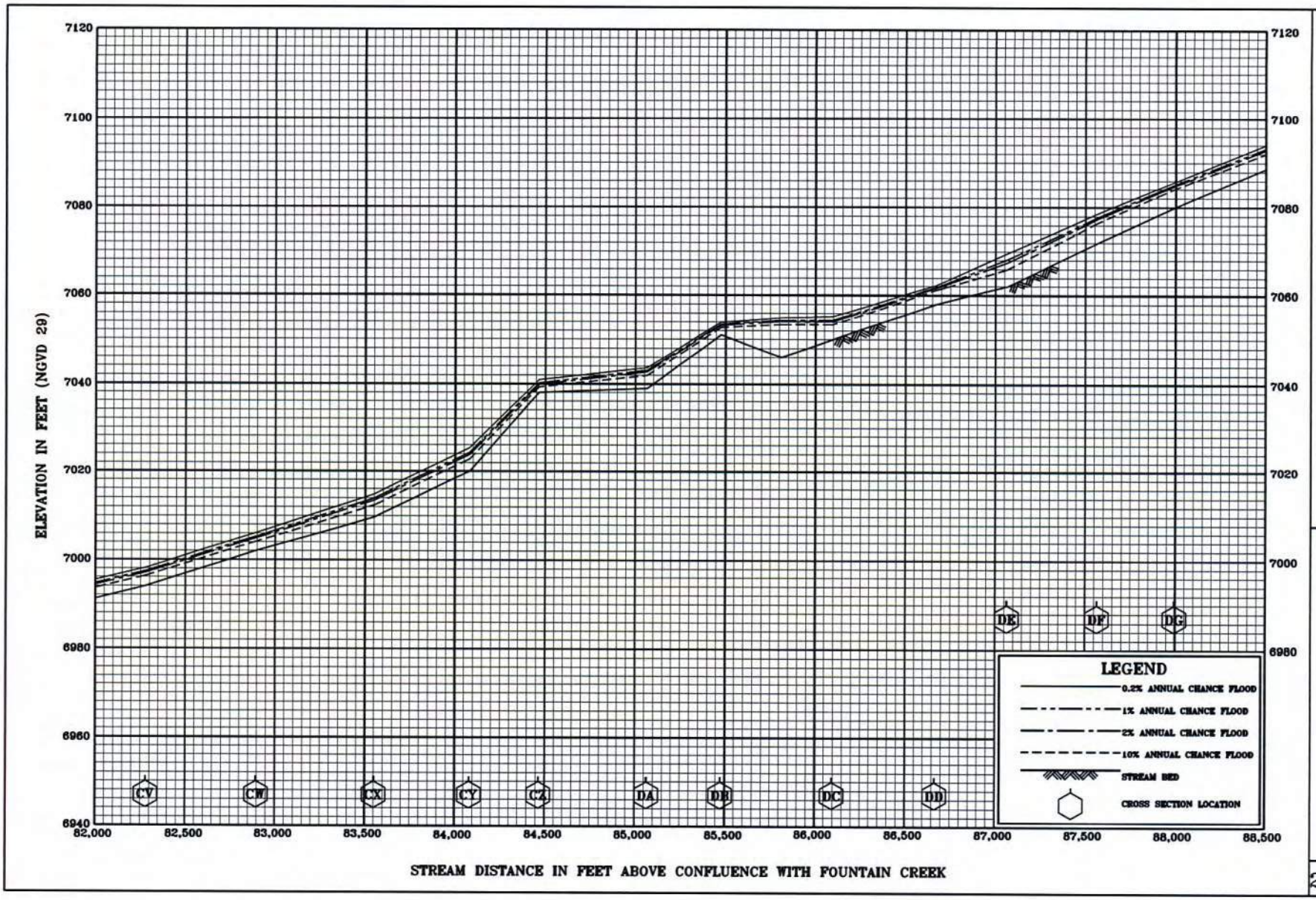

FLOOD PROFILES

SAND CREEK

REVISED TO
REFLECT LOMR
EFFECTIVE: July 23, 2009

FEDERAL EMERGENCY MANAGEMENT AGENCY

EL PASO COUNTY, CO
AND INCORPORATED AREAS

204P(b)

FEDERAL EMERGENCY MANAGEMENT AGENCY

EL PASO COUNTY, CO
AND INCORPORATED AREAS

FLOOD PROFILES

REVISED TO
REFLECT LOMR
EFFECTIVE: July 23, 2009

SAND CREEK

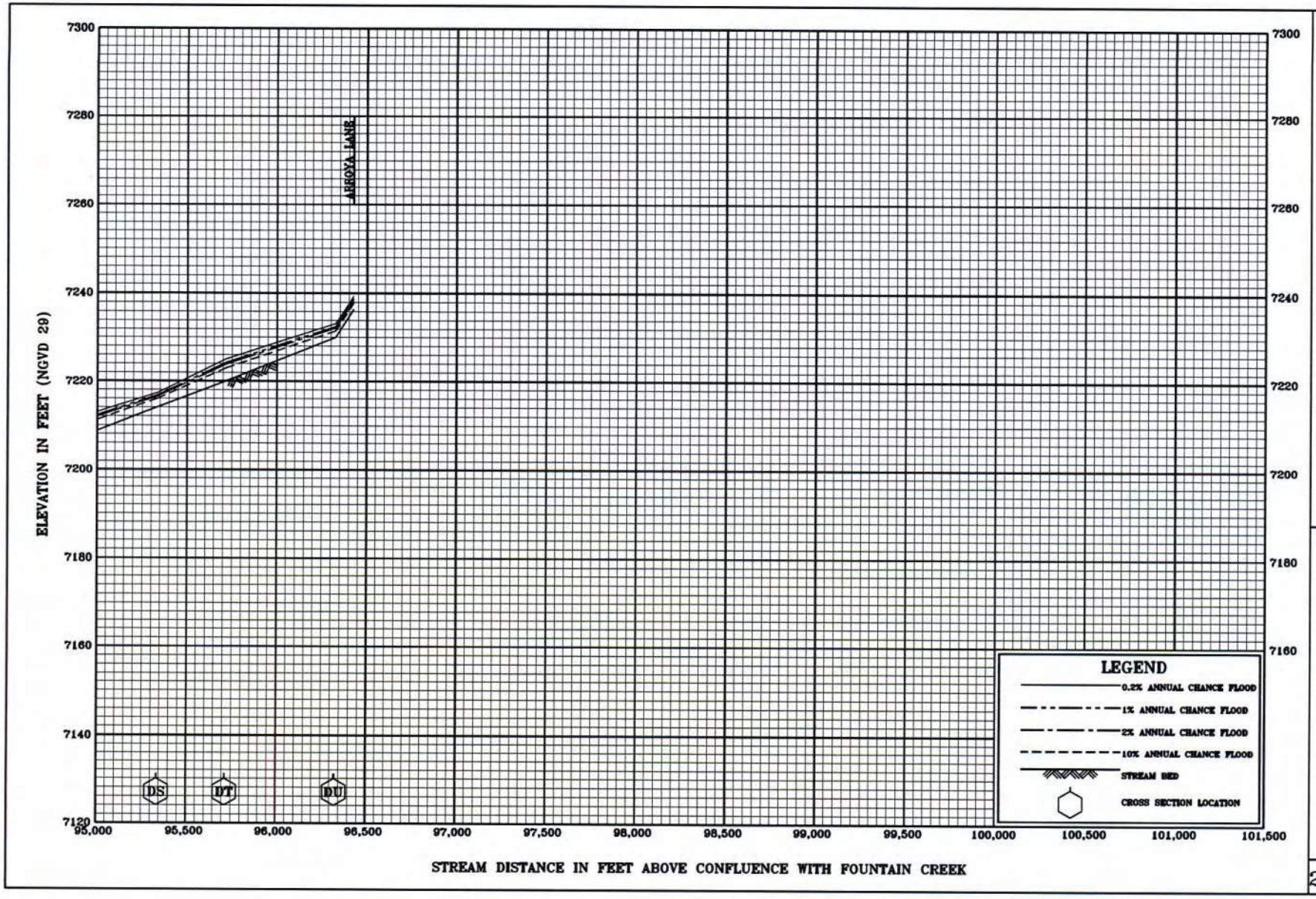

FLOOD PROFILES

REVISED TO
REFLECT LOMR
EFFECTIVE: July 23, 2009

SAND CREEK

FEDERAL EMERGENCY MANAGEMENT AGENCY

EL PASO COUNTY, CO
AND INCORPORATED AREAS

204P(d)

RECOMMENDATIONS PER SAND CREEK DBPS

CLASSIC
CONSULTING
ENGINEERS & SURVEYORS

MATCH SHT 56 STA 933 + 80

THIS DRAWING IS A MASTER PLANNING SHEET REPRESENTING PRELIMINARY AND CONCEPTUAL ENGINEERING. IT SHOULD NOT BE USED FOR CONSTRUCTION PURPOSES.

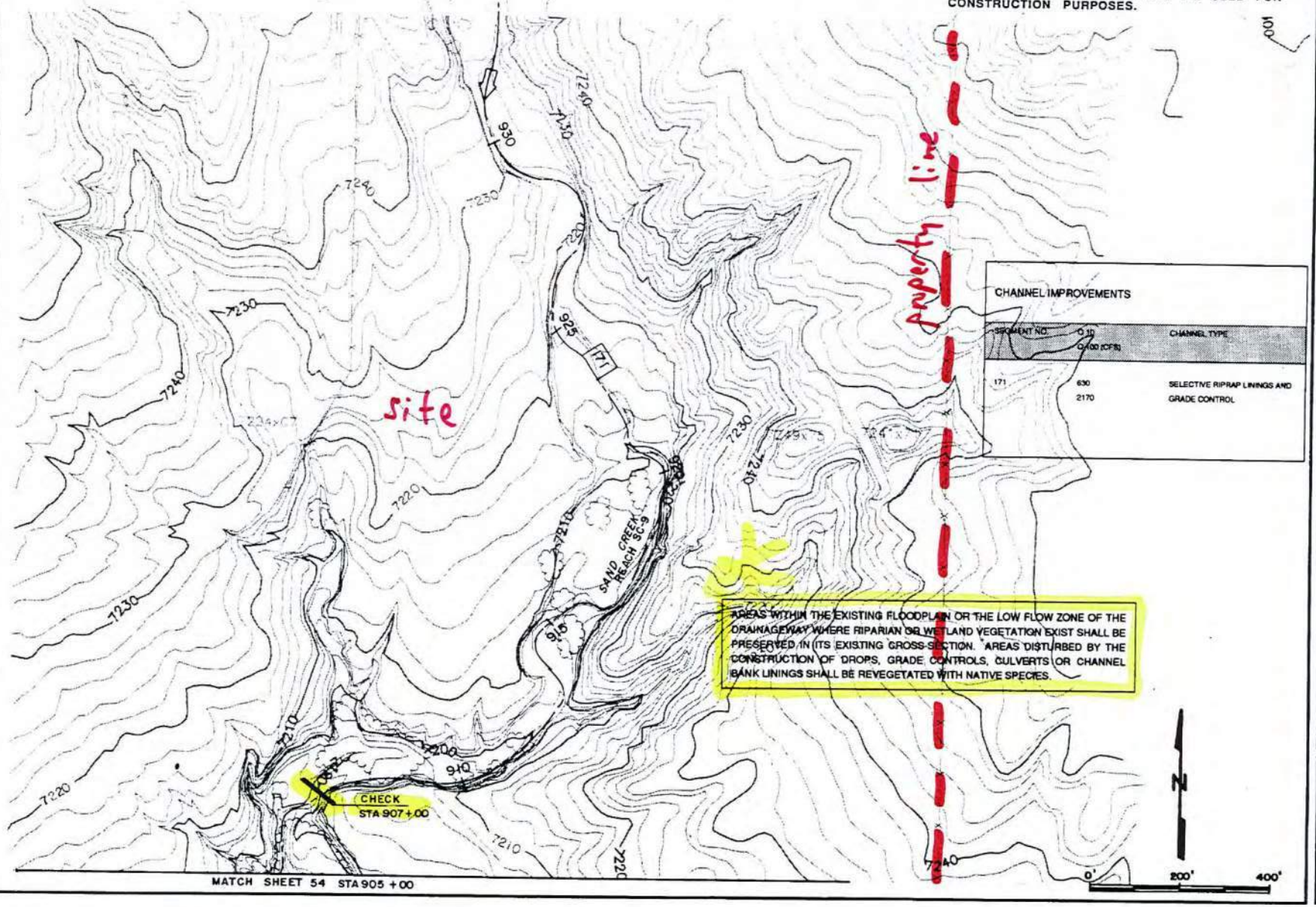

CHANNEL IMPROVEMENTS

SEGMENT NO.	Q 10 / Q 100 (CFS)	CHANNEL TYPE
171	630 / 2170	SELECTIVE RIPRAP LININGS AND GRADE CONTROL

AREAS WITHIN THE EXISTING FLOODPLAIN OR THE LOW FLOW ZONE OF THE DRAINAGEWAY WHERE RIPARIAN OR WETLAND VEGETATION EXIST SHALL BE PRESERVED IN ITS EXISTING CROSS-SECTION. AREAS DISTURBED BY THE CONSTRUCTION OF DROPS, GRADE CONTROLS, CULVERTS OR CHANNEL BANK LININGS SHALL BE REVEGETATED WITH NATIVE SPECIES.

MATCH SHEET 54 STA 905 + 00

Kiowa Engineering Corporation
419 W. Bijou Street
Colorado Springs, Colorado
80905-1308

SAND CREEK DRAINAGE BASIN PLANNING STUDY
PRELIMINARY DESIGN PLANS

Project No.	90-04-09
Date:	9/92
Design:	RNW
Drawn:	EAK
Check:	RNW
Revisions:	

MATCH SHT 57 STA 968+00

THIS DRAWING IS A MASTER PLANNING SHEET REPRESENTING PRELIMINARY AND CONCEPTUAL ENGINEERING. IT SHOULD NOT BE USED FOR CONSTRUCTION PURPOSES.

PROVIDE ADDITIONAL 60" CMP. 100-YR CAPACITY

EX 60" CMP TO REMAIN

END DRAINAGEWAY

01-PND-25

EX EMBANKMENT TO REMAIN. PROVIDE OUTLET STRUCTURE.

STA 950+50 CHECK

IMPROVED RIPRAP CHANNEL
BW=20', d=2', S=1.8%
3' DROPS @ 125' INTERVALS
Q100= 350 cfs

NO CHANNEL IMPROVEMENTS REQUIRED FOR THIS SEGMENT

CHANNEL IMPROVEMENTS

SEGMENT NO.	Q 10 / Q100 (CFS)	CHANNEL TYPE
171	630 / 2170	SELECTIVE RIPRAP LININGS AND GRADE CONTROL
172	330 / 1030	

SAND CREEK REACH SC-9

VOLLMER RD

STA 941+20 CHECK

01-CUL-22 48" CMP

NEW 6 H x 12 W CBC 10-YR CAPACITY

EX 60" CMP TO BE REMOVED

01-CUL-24 18" CMP

ARROYO LANE

SITE

0' 200' 400'

MATCH SHT 55 STA 933+80

Kiowa Engineering Corporation
419 W. Bijou Street
Colorado Springs, Colorado
80905-1308

SAND CREEK DRAINAGE BASIN PLANNING STUDY
PRELIMINARY DESIGN PLANS

Project No	90-04-09
Date:	9/92
Design:	RNW
Drawn:	EAK
Check:	RNW
Revisions:	

VI. DEVELOPMENT OF ALTERNATIVES AND RECOMMENDED PLAN

The concepts which are available for handling stormwater runoff within the Sand Creek basin have been presented and discussed in detail in the Sand Creek Drainage Basin Planning Study Development of Alternatives Report and the draft East Fork Sand Creek Drainage Basin Planning Study. The process of combining the various channel treatment options, detention schemes and roadway crossing structures into a contiguous plan for all of the reaches is presented in this chapter of the report. As a result of the evaluation of the flood control, environmental, open space, operations and maintenance, and implementation concerns within the Sand Creek basin, the following concepts were identified as having sufficient feasibility to warrant further evaluation and review:

Channel Concepts:	Floodplain Preservation Channelization, 10- or 100-year Selective Improvements
Detention:	Regional detention systems

Channel Concepts: The channel concepts listed above have been evaluated with respect to the parameters listed in the previous chapter. A concept's feasibility depends upon its impact, positive or negative, upon the evaluation parameters. ***The floodplain preservation*** concept has been considered to be the same as the ***"do-nothing"*** alternative. The floodplain preservation concept would involve the regulation of the floodplain limits, generally as depicted on the effective City of Colorado Springs and El Paso County Flood Insurance Rate Maps. Regulation of the floodplain so that future encroachments are minimized and the floodproofing of structures which are currently within the 100-year floodplain would presumably be the methods used to address the flood hazard concerns along Sand Creek. In the upper reaches of Sand Creek, the ownership or easements associated with the 100-year floodplain (or greater limits to allow for an erosion buffer zone) would be a primary issue in regards to implementation of such a concept. Detention in the upper reaches of the basin Sand Creek basin and in the East Fork Sand Creek basin will maintain the 100-year floodplain at existing limits within the lower reaches of Sand Creek. The "do-nothing" concept is feasible wherever the existing drainageway improvements are of adequate capacity to convey flood flows. ***Channelization*** would involve the lining of the Creek into a more confined flow area, and could be done for either the ***100-year or 10-year*** flood discharges. Several typical channel concepts have been presented. The primary bank lining material would probably be riprap. Grade control and/or drop structures would be required in a channelization concept so that the flood velocities could be controlled to a level requiring medium to heavy riprap. Soil cement offers an alternative to riprap and concrete for the construction of drops or grade control structures. Revegetation would occur wherever the native vegetation was disturbed by the channel construction. Willows at the toe of the riprap banks would be a minimum replacement. ***Selective linings*** would involve the construction of grade controls, drop structures, bank linings, storm sewer outlet control structures selectively sited to resist stream erosion or to reduce potential flooding damages. Areas of future concern such as at the outside bends of the creek, or at the outlets of bridges or culverts which will cross the drainageway would be subject to selective improvements.

Detention Concepts: The two general detention concepts evaluated were onsite versus regional detention. During the evaluation process, it was determined that the onsite detention concept has a low feasibility relative to a regional concept. This is because, (1) onsite detention has a unpredictable impact upon lowering peak discharges from urbanized areas to historic conditions (reference, Urbonas and Glidden, "Effect of Detention on Flows in Major Drainageways" ASCE Water Forum '81, 1981), (2) an onsite concept has little impact upon maintaining or enhancing water quality, (3) the number of onsite detention basins, their locations and size cannot be accurately determined in the undeveloped portions of the basin at this time, and (4) onsite detention would present a substantial maintenance responsibility to the jurisdictions involved. For these reasons the onsite detention concept was eliminated and regional detention basin concepts were developed. In the analysis of the channel concepts, regional detention facilities were assumed to be in place.

Channel Alternatives

Presented on Table VI-1 is a matrix of channel alternatives which were evaluated. All reaches of Sand Creek and the East Fork of Sand Creek had at least three alternatives analyzed. Presented on Tables VI-2 through VI-6 are comparative evaluations of the floodplain preservation (do-nothing), channelization and selective lining concepts, for the mainstem Sand Creek basin, by reach. The purpose of the evaluation process was to identify the relative advantages and disadvantages of each concept within each reach.

100-year peak discharge to levels. This will allow for the channel improvements to be constructed within the existing right-of way.

Reaches SC-5 and SC-6: A selective channel improvement concept has been recommended for these reaches. Detention in Reach SC-8 of the basin will maintain flows to historic peak discharge levels, however the low flows will increase in frequency and volume. For this reason it has been recommended to provide riprap channel linings at selective locations to at least the 10-year water surface and install grade controls. This will prevent the long-term degradation of the invert. A residual 100-year floodplain will remain and will offer opportunities for habitat replacement and open space preservation. Land adjacent to the drainageway is currently undeveloped or unplatted at this time which makes the feasibility of implementing this concept greater in comparison to the urbanized reaches of the creek.

Reaches SC-7 and SC-8: A selective improvement concept involving the localized lining of channel banks and grade control construction has been recommended for these reaches. The feasibility of this concept stems from the fact that flows will be reduced because of detention. Numerous individual rural ownerships cross the drainageway, however no habitable structures lie within the 100-year floodplain. Because of this, the economic feasibility of channelization concepts is low. Non-structural measures can be used to limit encroachments into floodprone areas. Additionally, the City of Colorado Springs Comprehensive plan recommends that the floodplains be maintained as open space. Potential habitat disturbances can be avoided with a selective plan, or simply replaced as part of the particular construction activity which caused the disturbance.

Reach SC-9: A floodplain preservation concept has been recommended for this reach. Little increase in urbanization is anticipated in this reach, and for this reason the existing drainageway is expected to remain stable. Localized improvements may be necessary to limit erosion caused by flow concentrations at culverts or storm sewers. Private ownership of the drainageway is anticipated to continue which lower the feasibility of channel concepts which require permanent right-of-ways or easements for construction and maintenance.

Reaches WF-1 through WF-3: A 100-year channel concept has been recommended for these reaches primarily because of the potential for flooding damages. Several roadway crossings are in need of replacement because of the flood hazard the constrictions create. Some open space enhancement potential exists for this concept since these reaches have been degraded visually by debris accumulation, bank sloughing and sedimentation. Little opportunity exists for widening the drainageway because the

Development of the Recommended Plan

Presented on Table VI-7 is a matrix representing the recommended plan for each major drainageway reach. The selection of a recommended channel treatment scheme has been based upon the qualitative and quantitative information presented in the Sand Creek Drainage Basin Planning Study Development of Alternatives report and the draft East Fork Sand Creek Drainage Basin Planning Study. Contained within the Technical Addendum to the Sand Creek Drainage Basin Planning Study Development of Alternatives report, is the alternative hydrologic, hydraulic and conceptual cost data used in the evaluation and comparison of each of the alternatives within the mainstem Sand Creek basin.

Discussion of Recommended Plan

The recommendation of a particular channel treatment or detention scheme has been based upon the qualitative and quantitative data presented. For each reach the flood hazard, environmental, cost, operations and maintenance and open space aspects of the drainageway were weighed for each alternative concept.

Reach SC-1: For this reach a 10-year channel section was recommended for further evaluation. With the implementation of regional detention in the upper basin, the 100-year floodplain will generally be confined within the existing banks, excepting at roadway crossings lacking 100-year capacity. It is recommended that a 10-year low flow channel be constructed within the invert of the existing channel through the construction of benches and sand bars. As urbanization continues towards the full development scenario, the base flow and annual flows will increase in volume and frequency. For this reason, the low flow area must be stabilized to protect the existing channel banks from undermining and subsequent bank sloughing. The benched areas offer an opportunity for habitat replacement and enhancement. At some locations within this reach, a residual 100-year floodplain will remain which will have to be regulated. The residual 100-year floodplain offers some potential for open space preservation and enhancement. This is particularly true in the portion of the reach downstream of Hancock Expressway.

Reaches SC-2 through SC-4: A 100-year channel concept has been recommended primarily because of the potential for flooding damages which exists in these reaches. Habitat disturbed by the construction of channel linings and grade control structures could be replaced along the channel toes and on the overbanks. The replacement of the Waynoka Road crossing will reduce the potential for flood damages in areas adjacent to these roadways. The detention within the upper reaches will limit the

VII. PRELIMINARY DESIGN

The results of the preliminary design analysis are summarized in this section. The alternative improvements have been quantitatively and qualitatively evaluated, and presented to the City of Colorado Springs and other interested agencies and individuals. Field review of specific areas of concern have been conducted in order to refine the channel treatments suggested for use along Sand Creek, East Fork Sand Creek and their major tributaries. The preliminary plan for the recommended alternative is shown on the drawings contained at the rear of this report.

Criteria

The City of Colorado Springs, El Paso County Drainage Criteria Manual was used in the development of the typical sections and plans for the major drainageways within the Basin. The City/County manual was supplemented by various criteria manuals with more specific application. These were:

1. "Design Guidelines and Criteria for Channels and Hydraulic Structures on Sandy Soils," prepared by Simons, Li & Associates, Inc., 1981.
2. Urban Storm Drainage Criteria Manual, Volumes I, II, and III, prepared by the Urban Drainage and Flood Control District.

Various design plans for roadway and channel improvement projects, either proposed or already constructed were reviewed in order to prepare the preliminary design plans. Specifically, the project design plans for the Las Vegas Street and Galley Road bridge replacement projects were reviewed and the improvements incorporated in the preliminary design. The **proposed** Sand Creek Stabilization Project, AT&SF Railroad to Hancock Expressway and the **proposed** Sand Creek Stabilization Project at Fountain Boulevard design plans have been reviewed and incorporated into the preliminary design plan and profiles.

Hydrology

Presented on Table VII-1 is selected hydrologic data to be used for the sizing of major drainageway improvements within the Basin. **Peak flow rates for the 10- and 100-year frequency incorporating and the selected detention alternatives for the Sand Creek and East Fork Sand Creek Basin are summarized for key points along the major drainageways.** Contained within the The technical addenda of this report contains a complete listing of peak discharges for all the sub-basins, stream segments and design points shown on Exhibit 1.

The sizing the drainageway improvements for the tributaries will need to be verified during the final design and layout of the proposed drainageway facilities. Land development activities may alter the location of design points along the tributaries, and therefore slight alteration in a sub-basin's length, slope and area may occur. The methods outlined in the City/County Drainage Criteria Manual should be applied during final design analysis. The rational method should be used to check the peak flow rates for all tributary drainageways and storm sewers draining areas less than 100 acres in size.

Channels

The recommended channel sections for each reach of drainageway has been outlined in Section VI of this report. In general, the banks of Sand Creek channel, from the confluence with Fountain Creek to the proposed Sand Creek Detention Basin No. 2 are to be lined, or in some cases relined, with riprap to either a 10-year or 100-year flow depth, as shown on the preliminary design plans. Above the Sand Creek Detention Basin No. 2, selectively located riprap bank protection such as at outside bends, at bridge or culvert outlets, and at confluences with side tributaries have been recommended. In conjunction with the selective improvement measures, and the 10-year low flow concept, the 100-year floodplain should be preserved and regulated. Wherever existing bank linings were judged to be adequate, no improvements have been recommended at this time.

For the West Fork Sand Creek, 100-year riprap bank linings have been recommended in order to address the 100-year flooding hazard which exists at numerous locations along the West Fork. The final design improvements shown in the Palmer Park Bridge Replacement project drawings have been incorporated into the preliminary design plans. In the uppermost reaches of the West Fork, a short segment of rectangular concrete channel has been recommended because of right-of-way constraints.

For the Center Tributary of Sand Creek, 100-year riprap lined channels have been recommended from the confluence with East Fork to Platte Avenue. Above Platte Avenue, the existing concrete channels have adequate capacity except where the drainageway channel has yet to be improved. The final design plans for the US 24 Bypass Project, Phase II have been incorporated into the plans. As part of the bypass construction, it is proposed to line the Center Tributary using riprap. The location of the proposed roadway, new crossings, drops and channel as shown on the Phase II Bypass plans have been reflected on the preliminary design drawings.

For the East Fork Sand Creek drainageway, riprap lined channel banks have been recommended for the majority of the reaches. This is mainly because of the high level of development predicted for the basin in the area known as the Banning-Lewis Ranch development. Open space to accommodate the 100-year floodplains should be allowed for as the East Fork Sand Creek drainageways develop. This is consistent with the Banning-Lewis Ranch master development plan which was approved at the time of annexation of this property. Above Woodmen Road, selective channel lining improvements and grade control structures have been recommended.

For the most part the side tributaries have been recommended to be lined with riprap, however there are some locations in the upper basin which have been proposed to be grasslined. The location of the side drainageways should be considered approximate and may very likely be modified in the future because of land development.

The primary criteria used when sizing the proposed channel sections has been velocity. For all riprap lined channels, the average design velocity should be no greater than 9 feet per second. This criteria allows for the use of Type H riprap within the main flow area of the drainageway. For the case of a 10-year channel with an overall floodplain section, limiting the main channel velocity to 9 feet per second will result in overbank velocities in the five feet per second range. At this level of overbank velocity, native vegetation will be able to withstand the erosive forces which might result in a 100-year flow event. Velocities approaching 10 feet per second could occur at constrictions such as at roadway crossings and at culvert outlets.

Drop Structures and Check Structures

Drop and check structures have been sited along Sand Creek in order to slow the channel velocity to the recommended 7 feet per second, and to prevent localized and long-term stream degradation from affecting channel linings and overbanks. In the reaches to be selectively lined, drops and check structures will protect the native vegetation from the detrimental effects of stream invert headcutting. Several types of structures could be considered for the Sand Creek Basin. For channel bottom widths in excess of fifty feet, soil cement or sheet piling drops/checks are feasible. For channels narrower than this, reinforced concrete structures are probably the best alternative. **A maximum drop height of three feet is recommended. The methodology recommended for use when designing vertical structures is contained with Volume II of the Urban Storm Drainage Criteria Manual.**

Detention

The recommended plan calls for the construction of six regional detention basins within the Sand Creek basin, and six regional basins within the East Fork Sand Creek basin. The purpose of the Sand Creek detention basins is to limit peak discharges at Powers Boulevard to existing development condition levels. The detention basins in the upper portions of the Sand Creek basin will keep the majority of the existing channel sections and bridges below Powers Boulevard with adequate flow capacity in the future development condition. The detention basins within the East Fork Sand Creek basin have been sized to maintain the flow outfalling from the Banning-Lewis Ranch property at existing levels. This in turn will help to reduce flow to the mainstem of Sand Creek. The detention basins have been designed to accommodate the 100-year future condition volume without overtopping the overflow spillway. Sand Creek Basin Nos. 2 and 6, and East Fork Sand Creek Basin Nos. 1, 2, and 3 will be classified as jurisdictional structures, and their design and operation would be subject to State Engineer's office criteria. Sand Creek basins number 1 and 3 should be designed so as to take advantage of the adjacent roadway embankments, and therefore classifying as incidental storage and not subject State Engineer's regulations.

At Stetson Hills Boulevard, the roadway embankment has created a 2 acre open water wetland which was identified during the environmental review of the basin. It is recommended that this wetland be preserved. Accordingly, an outlet control structure will have to be constructed to pass the 100-year discharge to the downstream channel without overtopping the roadway. No floodwater storage or routing has been accounted for in the hydrology modelling at this roadway for the selected detention plan.

For the East Fork Sand Creek detention basin numbers 2, and 3, the existing embankment and outlet structure act to maintain a permanent pool at this time. It is recommended that the design of these detention basins be directed at maintaining the permanent pool when the flood control storage is to be added. The existence of a permanent pool may enhance the water quality aspects of these basins, and offer the opportunity of open space development conducive with open water.

Water Quality

Improvement of urban stormwater quality has become and important issue in drainage basin planning. Many pollutants are naturally associated with sediments that enter sensitive receiving waters. The pollutants are naturally occurring compounds that are carried to the drainageways in storm runoff. Other pollutants are the result of urbanization such as lawn chemicals, oil and grease, pet feces, lawn clippings and other items. Many pollutants can be limited by programs such as erosion control at construction sites, educational programs to inform the public as to the proper use of lawn chemicals, oil recycling programs and street sweeping programs. Even with these programs in place, erosion along the drainageways can generate large quantities of sediment that can settle out along the downstream channel bottoms.

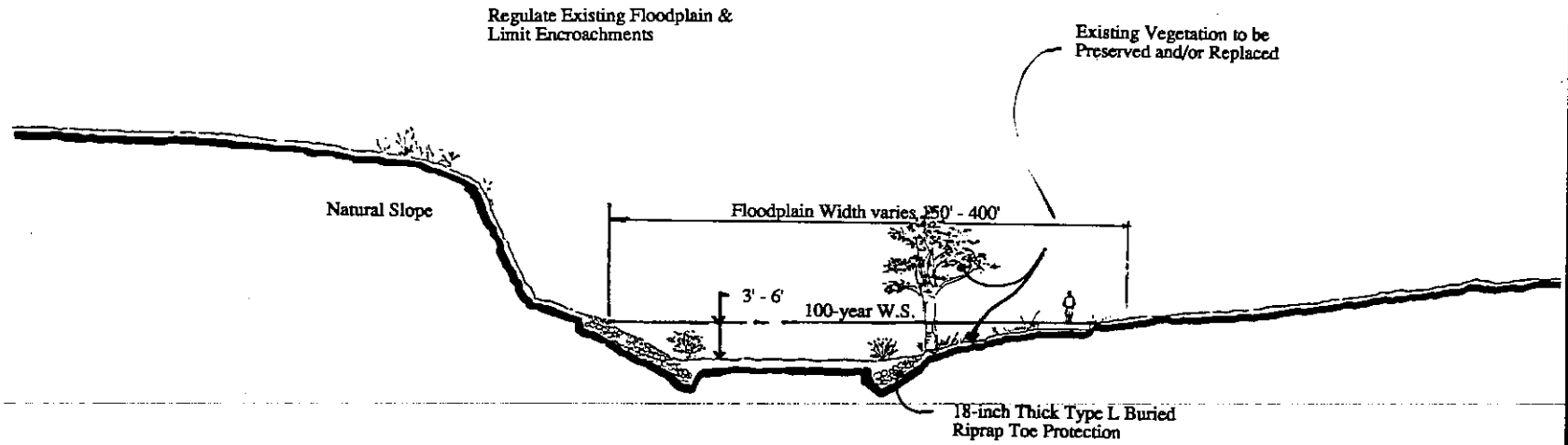

Kiowa Engineering Corporation
419 W. Bijou Street
Colorado Springs, Colorado
80905-1308

SAND CREEK DRAINAGE
BASIN PLANNING STUDY

Typical Channel Sections

Project No.:
Date:
Design:
Drawn:
Check:
Revisions:

CS-3

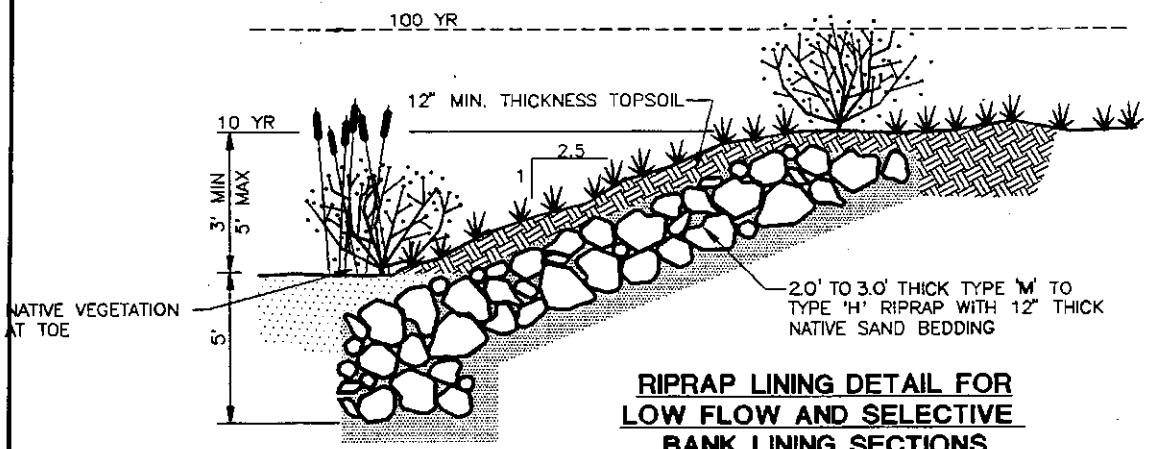

RIPRAP LINING DETAIL FOR LOW FLOW AND SELECTIVE BANK LINING SECTIONS

NTS

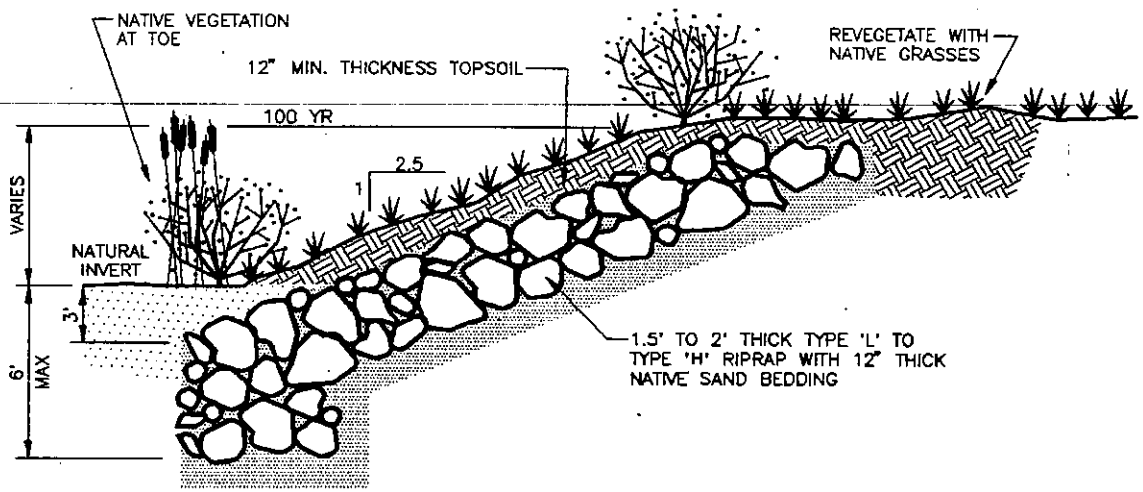

RIPRAP LINING DETAIL FOR 100 YR CHANNEL SECTIONS

NTS

Kiowa Engineering Corporation
419 W. Bijou Street
Colorado Springs, Colorado
80905-1308

SAND CREEK DRAINAGE BASIN PLANNING STUDY

Project No.
Date:
Design:
Drawn:
Check:
Revisions:

CS-6

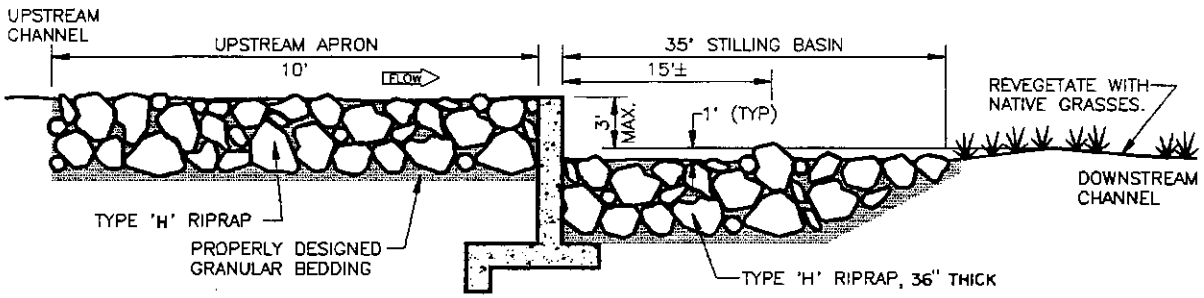

NOTE: DIMENSIONS OF APRON, STILLING BASIN, RIPRAP, AND CHECK STRUCTURE IS TO BE DETERMINED DURING FINAL DESIGN.

TYPICAL DROP STRUCTURE GENERALIZED PROFILE

NTS

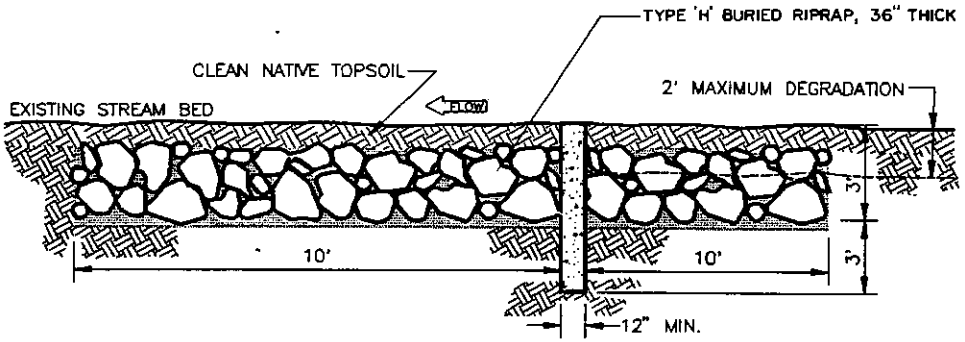

TYPICAL EROSION CONTROL CHECK PROFILE

NTS

Kiowa Engineering Corporation
419 W. Bijou Street
Colorado Springs, Colorado
80905-1308

SAND CREEK DRAINAGE BASIN PLANNING STUDY

Project No:
Date:
Design:
Drawn:
Check:
Revisions:

CS-7

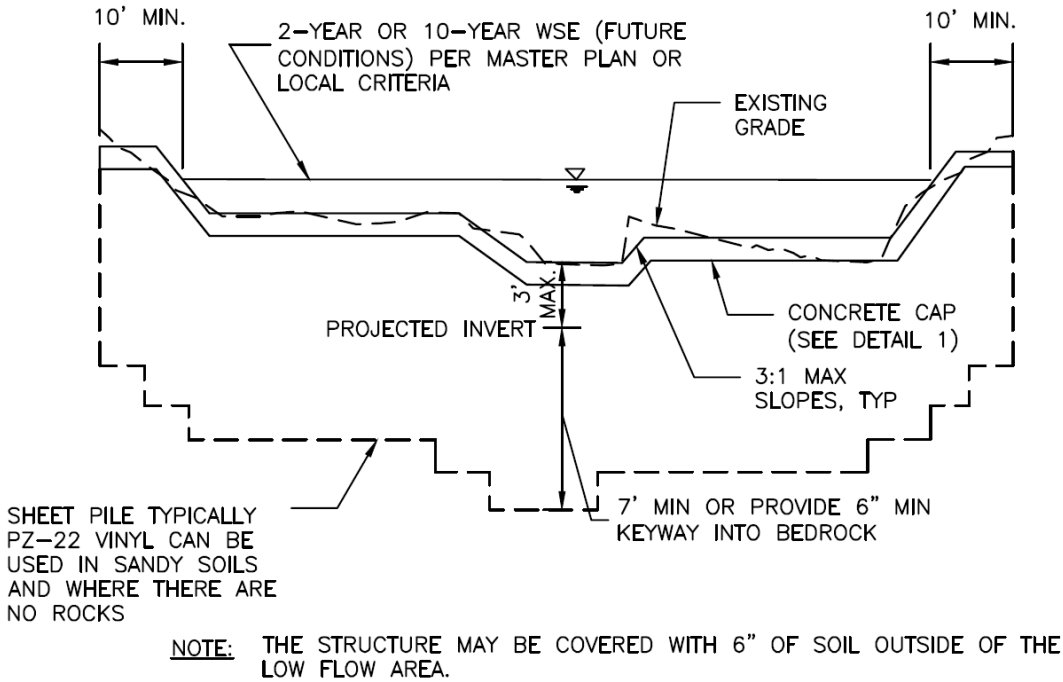

NOTE: THE STRUCTURE MAY BE COVERED WITH 6" OF SOIL OUTSIDE OF THE LOW FLOW AREA.

SECTION A1
SHEET PILE CHECK

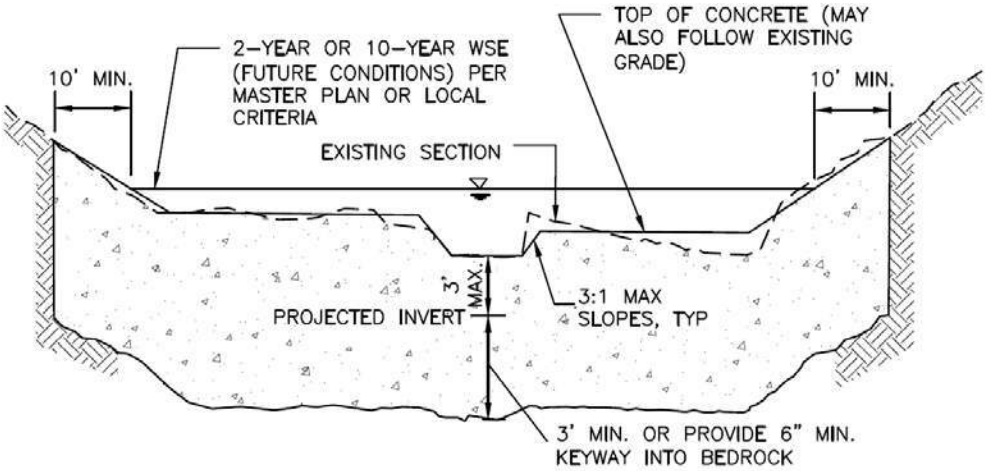

NOTES: 1. TRENCH IN UNDISTURBED SOIL. FORM TOP 6" OF CHECK. DO NOT OVER EXCAVATE TO FORM WALLS OR CONSTRUCT A FOOTING.
2. THE STRUCTURE MAY BE COVERED WITH 6" OF SOIL OUTSIDE OF THE LOW FLOW AREA.
3. VIBRATE CONCRETE INTO TRENCH.

SECTION A2
CONCRETE CHECK

Figure 9-27. Check structure details (Part 2 of 3)

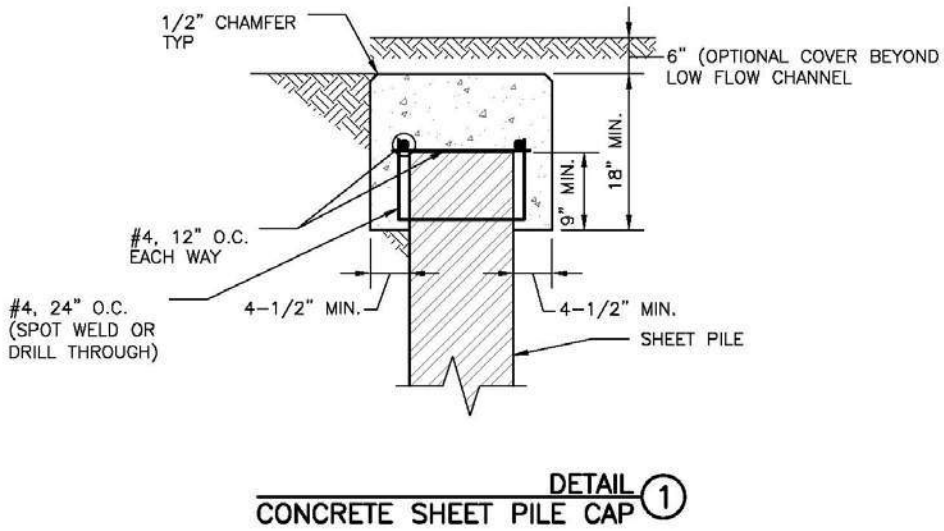

Figure 9-28. Check structure details (Part 3 of 3)

HYDROLOGIC CALCULATIONS

For Colorado Springs and much of the Fountain Creek watershed, the 1-hour depths are fairly uniform and are summarized in Table 6-2. Depending on the location of the project, rainfall depths may be calculated using the described method and the NOAA Atlas maps shown in Figures 6-6 through 6-17.

Table 6-2. Rainfall Depths for Colorado Springs

Return Period	1-Hour Depth	6-Hour Depth	24-Hour Depth
2	1.19	1.70	2.10
5	1.50	2.10	2.70
10	1.75	2.40	3.20
25	2.00	2.90	3.60
50	2.25	3.20	4.20
100	2.52	3.50	4.60

Where Z= 6,840 ft/100

These depths can be applied to the design storms or converted to intensities (inches/hour) for the Rational Method as described below. However, as the basin area increases, it is unlikely that the reported point rainfalls will occur uniformly over the entire basin. To account for this characteristic of rain storms an adjustment factor, the Depth Area Reduction Factor (DARF) is applied. This adjustment to rainfall depth and its effect on design storms is also described below. The UDFCD UD-Rain spreadsheet, available on UDFCD's website, also provides tools to calculate point rainfall depths and Intensity-Duration-Frequency curves[2] and should produce similar depth calculation results.

2.2 Design Storms

Design storms are used as input into rainfall/runoff models and provide a representation of the typical temporal distribution of rainfall events when the creation or routing of runoff hydrographs is required. It has long been observed that rainstorms in the Front Range of Colorado tend to occur as either short-duration, high-intensity, localized, convective thunderstorms (cloud bursts) or longer-duration, lower-intensity, broader, frontal (general) storms. The significance of these two types of events is primarily determined by the size of the drainage basin being studied. Thunderstorms can create high rates of runoff within a relatively small area, quickly, but their influence may not be significant very far downstream. Frontal storms may not create high rates of runoff within smaller drainage basins due to their lower intensity, but tend to produce larger flood flows that can be hazardous over a broader area and extend further downstream.

- **Thunderstorms**: Based on the extensive evaluation of rain storms completed in the Carlton study (Carlton 2011), it was determined that typical thunderstorms have a duration of about 2 hours. The study evaluated over 300,000 storm cells using gage-adjusted NEXRAD data, collected over a 14-year period (1994 to 2008). Storms lasting longer than 3 hours were rarely found. Therefore, the results of the Carlton study have been used to define the shorter duration design storms.

  To determine the temporal distribution of thunderstorms, 22 gage-adjusted NEXRAD storm cells were studied in detail. Through a process described in a technical memorandum prepared by the City of Colorado Springs (City of Colorado Springs 2012), the results of this analysis were interpreted and normalized to the 1-hour rainfall depth to create the distribution shown in Table 6-3 with a 5 minute time interval for drainage basins up to 1 square mile in size. This distribution represents the rainfall

Table 6-6. Runoff Coefficients for Rational Method
(Source: UDFCD 2001)

Land Use or Surface Characteristics	Percent Impervious	Runoff Coefficients											
		2-year		5-year		10-year		25-year		50-year		100-year	
		HSG A&B	HSG C&D	HSG A&B	HSG C&D	HSG A&B	HSG C&D	HSG A&B	HSG C&D	HSG A&B	HSG C&D	HSG A&B	HSG C&D
Business													
Commercial Areas	95	0.79	0.80	0.81	0.82	0.83	0.84	0.85	0.87	0.87	0.88	0.88	0.89
Neighborhood Areas	70	0.45	0.49	0.49	0.53	0.53	0.57	0.58	0.62	0.60	0.65	0.62	0.68
Residential													
1/8 Acre or less	65	0.41	0.45	0.45	0.49	0.49	0.54	0.54	0.59	0.57	0.62	0.59	0.65
1/4 Acre	40	0.23	0.28	0.30	0.35	0.36	0.42	0.42	0.50	0.46	0.54	0.50	0.58
1/3 Acre	30	0.18	0.22	0.25	0.30	0.32	0.38	0.39	0.47	0.43	0.52	0.47	0.57
1/2 Acre	25	0.15	0.20	0.22	0.28	0.30	0.36	0.37	0.46	0.41	0.51	0.46	0.56
1 Acre	20	0.12	0.17	0.20	0.26	0.27	0.34	0.35	0.44	0.40	0.50	0.44	0.55
Industrial													
Light Areas	80	0.57	0.60	0.59	0.63	0.63	0.66	0.66	0.70	0.68	0.72	0.70	0.74
Heavy Areas	90	0.71	0.73	0.73	0.75	0.75	0.77	0.78	0.80	0.80	0.82	0.81	0.83
Parks and Cemeteries	7	0.05	0.09	0.12	0.19	0.20	0.29	0.30	0.40	0.34	0.46	0.39	0.52
Playgrounds	13	0.07	0.13	0.16	0.23	0.24	0.31	0.32	0.42	0.37	0.48	0.41	0.54
Railroad Yard Areas	40	0.23	0.28	0.30	0.35	0.36	0.42	0.42	0.50	0.46	0.54	0.50	0.58
Undeveloped Areas													
Historic Flow Analysis-- Greenbelts, Agriculture	2	0.03	0.05	0.09	0.16	0.17	0.26	0.26	0.38	0.31	0.45	0.36	0.51
Pasture/Meadow	0	0.02	0.04	0.08	0.15	0.15	0.25	0.25	0.37	0.30	0.44	0.35	0.50
Forest	0	0.02	0.04	0.08	0.15	0.15	0.25	0.25	0.37	0.30	0.44	0.35	0.50
Exposed Rock	100	0.89	0.89	0.90	0.90	0.92	0.92	0.94	0.94	0.95	0.95	0.96	0.96
Offsite Flow Analysis (when landuse is undefined)	45	0.26	0.31	0.32	0.37	0.38	0.44	0.44	0.51	0.48	0.55	0.51	0.59
Streets													
Paved	100	0.89	0.89	0.90	0.90	0.92	0.92	0.94	0.94	0.95	0.95	0.96	0.96
Gravel	80	0.57	0.60	0.59	0.63	0.63	0.66	0.66	0.70	0.68	0.72	0.70	0.74
Drive and Walks	100	0.89	0.89	0.90	0.90	0.92	0.92	0.94	0.94	0.95	0.95	0.96	0.96
Roofs	90	0.71	0.73	0.73	0.75	0.75	0.77	0.78	0.80	0.80	0.82	0.81	0.83
Lawns	0	0.02	0.04	0.08	0.15	0.15	0.25	0.25	0.37	0.30	0.44	0.35	0.50

3.2 Time of Concentration

One of the basic assumptions underlying the Rational Method is that runoff is a function of the average rainfall rate during the time required for water to flow from the hydraulically most remote part of the drainage area under consideration to the design point. However, in practice, the time of concentration can be an empirical value that results in reasonable and acceptable peak flow calculations.

For urban areas, the time of concentration (t_c) consists of an initial time or overland flow time (t_i) plus the travel time (t_t) in the storm sewer, paved gutter, roadside drainage ditch, or drainage channel. For non-urban areas, the time of concentration consists of an overland flow time (t_i) plus the time of travel in a concentrated form, such as a swale or drainageway. The travel portion (t_t) of the time of concentration can be estimated from the hydraulic properties of the storm sewer, gutter, swale, ditch, or drainageway. Initial time, on the other hand, will vary with surface slope, depression storage, surface cover, antecedent rainfall, and infiltration capacity of the soil, as well as distance of surface flow. The time of concentration is represented by Equation 6-7 for both urban and non-urban areas.

Table 6-10. NRCS Curve Numbers for Frontal Storms & Thunderstorms for Developed Conditions (ARCII)

Fully Developed Urban Areas (vegetation established)[1]	Treatment	Hydrologic Condition	% I	Pre-Development CN			
				HSG A	HSG B	HSG C	HSG D
Open space (lawns, parks, golf courses, cemeteries, etc.):							
Poor condition (grass cover < 50%)	-----	-----	---	68	79	86	89
Fair condition (grass cover 50% to 75%)	-----	-----	---	49	69	79	84
Good condition (grass cover > 75%)	-----	-----	---	39	61	74	80
Impervious areas:							
Paved parking lots, roofs, driveways, etc. (excluding right-of-way	-----	-----	---	98	98	98	98
Streets and roads:							
Paved; curbs and storm sewers (excluding right-of-way)	-----	-----	---	98	98	98	98
Paved; open ditches (including right-of-way)	-----	-----	---	83	89	92	93
Gravel (including right-of-way)	-----	-----	---	76	85	89	91
Dirt (including right-of-way)	-----	-----	---	72	82	87	89
Western desert urban areas:							
Natural desert landscaping (pervious areas only)	-----	-----	---	63	77	85	88
Artificial desert landscaping (impervious weed barrier, desert shrub with 1- to 2-inch sand or gravel mulch and basin borders)	-----	-----	---	96	96	96	96
Urban districts:							
Commercial and business	-----	-----	85	89	92	94	95
Industrial	-----	-----	72	81	88	91	93
Residential districts by average lot size:							
1/8 acre or less (town houses)	-----	-----	65	77	85	90	92
1/4 acre	-----	-----	38	61	75	83	87
1/3 acre	-----	-----	30	57	72	81	86
1/2 acre	-----	-----	25	54	70	80	85
1 acre	-----	-----	20	51	68	79	84
2 acres	-----	-----	12	46	65	77	82
Developing Urban Areas[1]	**Treatment[2]**	**Hydrologic Condition[3]**	**% I**	**HSG A**	**HSG B**	**HSG C**	**HSG D**
Newly graded areas (pervious areas only, no vegetation)	-----	-----	---	77	86	91	94
Cultivated Agricultural Lands[1]	**Treatment**	**Hydrologic Condition**	**% I**	**HSG A**	**HSG B**	**HSG C**	**HSG D**
Fallow	Bare soil	-----	---	77	86	91	94
	Crop residue cover (CR)	Poor	---	76	85	90	93
		Good	---	74	83	88	90
Row crops	Straight row (SR)	Poor	---	72	81	88	91
		Good	---	67	78	85	89
	SR + CR	Poor	---	71	80	87	90
		Good	---	64	75	82	85
	Contoured (C)	Poor	---	70	79	84	88
		Good	---	65	75	82	86
	C + CR	Poor	---	69	78	83	87
		Good	---	64	74	81	85
	Contoured & terraced (C&T)	Poor	---	66	74	80	82
		Good	---	62	71	78	81
	C&T+ CR	Poor	---	65	73	79	81
		Good	---	61	70	77	80
Small grain	SR	Poor	---	65	76	84	88
		Good	---	63	75	83	87
	SR + CR	Poor	---	64	75	83	86
		Good	---	60	72	80	84
	C	Poor	---	63	74	82	85
		Good	---	61	73	81	84
	C + CR Poor	Poor	---	62	73	81	84
		Good	---	60	72	80	83
	C&T	Poor	---	61	72	79	82
		Good	---	59	70	78	81
	C&T+ CR	Poor	---	60	71	78	81
		Good	---	58	69	77	80

Figure 6-5. Colorado Springs Rainfall Intensity Duration Frequency

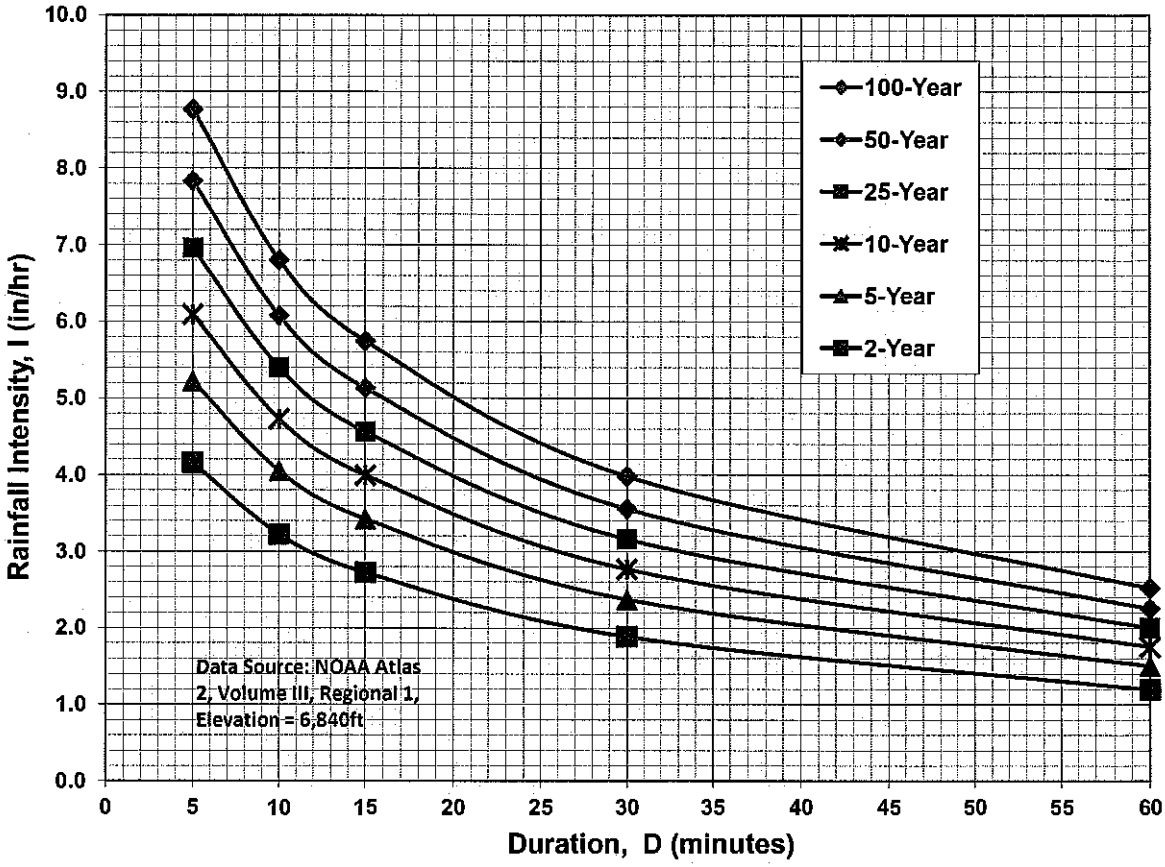

IDF Equations

$I_{100} = -2.52 \ln(D) + 12.735$

$I_{50} = -2.25 \ln(D) + 11.375$

$I_{25} = -2.00 \ln(D) + 10.111$

$I_{10} = -1.75 \ln(D) + 8.847$

$I_{5} = -1.50 \ln(D) + 7.583$

$I_{2} = -1.19 \ln(D) + 6.035$

Note: Values calculated by equations may not precisely duplicate values read from figure.

JOB NAME: *RETREAT AT TIMBERRIDGE FILING NO. 3*
JOB NUMBER: *1185.30*
DATE: *01/30/24*
CALCULATED BY: *MAW*

FINAL DRAINAGE REPORT ~ BASIN RUNOFF COEFFICIENT SUMMARY

		IMPERVIOUS AREA / STREETS				LANDSCAPE/DEVELOPED AREAS				WEIGHTED			WEIGHTED CA			
BASIN	TOTAL AREA (AC)	AREA (AC)	C(2)	C(5)	C(100)	AREA (AC)	C(2)	C(5)	C(100)	C(2)	C(5)	C(100)	**CA(2)**	**CA(5)**	**CA(100)**	**EFFECTIVE IMPERVIOUS (%)**
EX-1	4.0	0.10	0.89	0.90	0.96	3.9	0.03	0.09	0.36	0.05	0.11	0.38	**0.21**	**0.44**	**1.50**	4.2%
EX-2	2.8	0.10	0.89	0.90	0.96	2.7	0.03	0.09	0.36	0.06	0.12	0.38	**0.17**	**0.33**	**1.07**	4.8%
EX-3	11.1	0.20	0.89	0.90	0.96	10.9	0.03	0.09	0.36	0.05	0.10	0.37	**0.51**	**1.16**	**4.12**	3.4%
EX-4	23.4	0.00	0.57	0.59	0.70	23.4	0.03	0.09	0.36	0.03	0.09	0.36	**0.70**	**2.11**	**8.42**	2.0%
EX-5	11.7	1.50	0.18	0.25	0.47	10.2	0.03	0.09	0.36	0.05	0.11	0.37	**0.58**	**1.29**	**4.38**	5.6%
EX-6	5.7	1.50	0.23	0.30	0.50	4.2	0.15	0.22	0.46	0.17	0.24	0.47	**0.98**	**1.37**	**2.68**	28.9%
EX-7	27.6	0.00	0.89	0.90	0.96	27.6	0.05	0.12	0.39	0.05	0.12	0.39	**1.38**	**3.31**	**10.76**	7.0%
EX-8	14.8	0.00	0.89	0.90	0.96	14.8	0.03	0.09	0.36	0.03	0.09	0.36	**0.44**	**1.33**	**5.33**	2.0%
EX-9	6.0	0.60	0.89	0.90	0.96	5.4	0.06	0.14	0.40	0.14	0.22	0.46	**0.86**	**1.30**	**2.74**	18.9%
EX-10	0.61	0.10	0.89	0.90	0.96	0.51	0.06	0.14	0.40	0.20	0.26	0.49	**0.12**	**0.16**	**0.30**	16.4%
OS-1	24.1	0.00	0.89	0.90	0.96	24.1	0.03	0.09	0.36	0.03	0.09	0.36	**0.72**	**2.17**	**8.68**	2.0%
OS-2	0.47	0.00	0.89	0.90	0.96	0.47	0.15	0.22	0.46	0.15	0.22	0.46	**0.07**	**0.10**	**0.22**	25.0%
OS-3	4.2	0.00	0.89	0.90	0.96	4.2	0.18	0.25	0.47	0.18	0.25	0.47	**0.76**	**1.05**	**1.97**	30.0%
OS-4	3.3	0.25	0.89	0.90	0.96	3.1	0.05	0.12	0.39	0.11	0.18	0.43	**0.38**	**0.59**	**1.43**	13.3%
OS-5	49.2	0.00	0.89	0.90	0.96	49.2	0.03	0.10	0.37	0.03	0.10	0.37	**1.67**	**4.92**	**18.20**	3.0%
OS-6	5.9	0.50	0.89	0.90	0.96	5.4	0.03	0.09	0.36	0.10	0.16	0.41	**0.61**	**0.94**	**2.42**	14.0%
OS-7	1.4	0.60	0.89	0.90	0.96	0.8	0.06	0.14	0.40	0.42	0.47	0.64	**0.58**	**0.65**	**0.90**	55.7%
A	14.2	0.50	0.89	0.90	0.96	13.70	0.05	0.12	0.39	0.08	0.15	0.41	**1.13**	**2.09**	**5.82**	10.1%
B	8.8	0.00	0.89	0.90	0.96	8.80	0.12	0.20	0.44	0.12	0.20	0.44	**1.06**	**1.76**	**3.87**	20.0%
C	1.4	0.20	0.89	0.90	0.96	1.20	0.18	0.25	0.47	0.28	0.34	0.54	**0.39**	**0.48**	**0.76**	38.6%
D	0.2	0.00	0.89	0.90	0.96	0.20	0.23	0.30	0.50	0.23	0.30	0.50	**0.05**	**0.06**	**0.10**	40.0%
E	2.3	0.00	0.89	0.90	0.96	2.30	0.15	0.22	0.46	0.15	0.22	0.46	**0.35**	**0.51**	**1.06**	25.0%
F	0.8	0.20	0.89	0.90	0.96	0.60	0.18	0.25	0.47	0.36	0.41	0.59	**0.29**	**0.33**	**0.47**	45.0%
G	2.2	0.00	0.89	0.90	0.96	2.20	0.18	0.25	0.47	0.18	0.25	0.47	**0.40**	**0.55**	**1.03**	30.0%
H1	2.5	0.20	0.89	0.90	0.96	2.30	0.05	0.12	0.39	0.12	0.18	0.44	**0.29**	**0.46**	**1.09**	14.0%
H2	3.1	0.30	0.89	0.90	0.96	2.80	0.07	0.16	0.41	0.15	0.23	0.46	**0.46**	**0.72**	**1.44**	15.5%
I	2.6	0.00	0.89	0.90	0.96	2.60	0.05	0.12	0.39	0.05	0.12	0.39	**0.13**	**0.31**	**1.01**	7.0%
J1	2.4	0.26	0.89	0.90	0.96	2.14	0.05	0.12	0.39	0.14	0.20	0.45	**0.34**	**0.49**	**1.08**	16.5%
J2	0.4	0.00	0.89	0.90	0.96	0.40	0.05	0.12	0.39	0.05	0.12	0.39	**0.02**	**0.05**	**0.16**	7.0%
K	3.30	0.55	0.89	0.90	0.96	2.75	0.05	0.12	0.39	0.19	0.25	0.49	**0.63**	**0.83**	**1.60**	24.2%
L	3.90	0.20	0.89	0.90	0.96	3.70	0.06	0.14	0.40	0.10	0.18	0.43	**0.40**	**0.70**	**1.67**	15.1%
M	0.54	0.38	0.89	0.90	0.96	0.16	0.05	0.12	0.39	0.64	0.67	0.79	**0.34**	**0.36**	**0.43**	65.1%
N	0.55	0.30	0.89	0.90	0.96	0.25	0.05	0.12	0.39	0.51	0.55	0.70	**0.28**	**0.30**	**0.39**	52.7%
O	0.61	0.00	0.89	0.90	0.96	0.61	0.05	0.12	0.39	0.05	0.12	0.39	**0.03**	**0.07**	**0.24**	7.0%

JOB NAME:	*RETREAT AT TIMBERRIDGE FILING NO. 3*
JOB NUMBER:	*1185.30*
DATE:	*01/30/24*
CALC'D BY:	*MAW*

Return Period	1-Hour Depth
2	1.19
5	1.50
10	1.75
25	2.00
50	2.25
100	2.52

$$t_i = \frac{0.395(1.1 - C_5)\sqrt{L}}{S^{0.33}}$$

$$V = C_v S_w^{0.5}$$

Tc=L/V

Table 6-7. Conveyance Coefficient, C_v

Type of Land Surface	C_v
Heavy meadow	2.5
Tillage/field	5
Riprap (not buried)*	6.5
Short pasture and lawns	7
Nearly bare ground	10
Grassed waterway	15
Paved areas and shallow paved swales	20

$$t_c = \frac{L}{180} + 10$$

*For buried riprap, select C_v value based on type of vegetative cover.

FINAL DRAINAGE REPORT ~ BASIN RUNOFF SUMMARY

BASIN	WEIGHTED CA(2)	WEIGHTED CA(5)	WEIGHTED CA(100)	OVERLAND C(5)	OVERLAND Length (ft)	OVERLAND Height (ft)	OVERLAND Tc (min)	STREET / CHANNEL FLOW Length (ft)	STREET / CHANNEL FLOW Slope (%)	STREET / CHANNEL FLOW Velocity (fps)	STREET / CHANNEL FLOW Tc (min)	Tc TOTAL (min)	INTENSITY I(2) (in/hr)	INTENSITY I(5) (in/hr)	INTENSITY I(100) (in/hr)	TOTAL FLOWS Q(2) (cfs)	TOTAL FLOWS Q(5) (cfs)	TOTAL FLOWS Q(100) (cfs)
EX-1	0.21	0.44	1.50	0.09	280	12	18.9					18.9	2.54	3.18	5.33	0.5	**1.4**	**8**
EX-2	0.17	0.33	1.07	0.09	260	8	20.3					20.3	2.45	3.07	5.15	0.4	**1.0**	**5**
EX-3	0.51	1.16	4.12	0.09	300	11	20.6	160	2.0%	1.4	1.9	22.5	2.33	2.92	4.89	1	**3**	**20**
EX-4	0.70	2.11	8.42	0.09	300	16	18.2	1300	3.5%	1.9	11.6	29.8	2.00	2.49	4.18	1	**5**	**35**
EX-5	0.58	1.29	4.38	0.09	300	14	19.0	550	3.0%	1.7	5.3	24.3	2.24	2.80	4.70	1	**4**	**21**
EX-6	0.98	1.37	2.68	0.22	300	10	18.5					18.5	2.56	3.21	5.38	2	**4**	**14**
EX-7	1.38	3.31	10.76	0.12	300	12	19.4	1300	2.2%	1.0	21.0	40.4	1.63	2.03	3.41	2	**7**	**37**
EX-8	0.44	1.33	5.33	0.09	300	10	21.2					21.2	2.40	3.00	5.04	1	**4**	**27**
EX-9	0.86	1.30	2.74	0.14	230	15	14.2	450	2.0%	1.4	5.3	19.5	2.50	3.13	5.25	2	**4**	**14**
EX-10	0.12	0.16	0.30	0.14	220	4	21.1					21.1	2.41	3.01	5.05	0.3	**0.5**	**1.5**

JOB NAME:	*RETREAT AT TIMBERRIDGE FILING NO. 3*
JOB NUMBER:	*1185.30*
DATE:	*01/30/24*
CALC'D BY:	*MAW*

Return Period	1-Hour Depth
2	1.19
5	1.50
10	1.75
25	2.00
50	2.25
100	2.52

$$t_i = \frac{0.395(1.1 - C_5)\sqrt{L}}{S^{0.33}}$$

$$V = C_v S_w^{0.5}$$

Tc=L/V

Table 6-7. Conveyance Coefficient, C_v

Type of Land Surface	C_v
Heavy meadow	2.5
Tillage/field	5
Riprap (not buried)*	6.5
Short pasture and lawns	7
Nearly bare ground	10
Grassed waterway	15
Paved areas and shallow paved swales	20

$$t_c = \frac{L}{180} + 10$$

*For buried riprap, select C_v value based on type of vegetative cover.

FINAL DRAINAGE REPORT ~ BASIN RUNOFF SUMMARY

BASIN	WEIGHTED CA(2)	WEIGHTED CA(5)	WEIGHTED CA(100)	OVERLAND C(5)	OVERLAND Length (ft)	OVERLAND Height (ft)	OVERLAND Tc (min)	STREET / CHANNEL FLOW Length (ft)	STREET / CHANNEL FLOW Slope (%)	STREET / CHANNEL FLOW Velocity (fps)	STREET / CHANNEL FLOW Tc (min)	Tc TOTAL (min)	INTENSITY I(2) (in/hr)	INTENSITY I(5) (in/hr)	INTENSITY I(100) (in/hr)	TOTAL FLOWS Q(2) (cfs)	TOTAL FLOWS Q(5) (cfs)	TOTAL FLOWS Q(100) (cfs)
OS-1	0.72	2.17	8.68	0.09	300	16	18.2	1300	3.5%	1.9	11.6	29.8	2.00	2.49	4.18	1	**5**	**35**
OS-2	0.07	0.10	0.22	0.22	220	11	13.9					13.9	2.91	3.64	6.11	0.2	**0.4**	**1.3**
OS-3	0.76	1.05	1.97	0.25	100	2	12.2	550	2.8%	1.7	5.5	17.7	2.62	3.27	5.50	2	**3**	**11**
OS-4	0.38	0.59	1.43	0.12	300	10	20.6	700	5.0%	2.2	5.2	25.8	2.17	2.71	4.54	1	**2**	**6**
OS-5	1.67	4.92	18.20	0.10	300	20	16.7	1900	3.0%	1.7	18.3	35.0	1.80	2.25	3.78	3	**11**	**69**
OS-6	0.61	0.94	2.42	0.09	300	10	21.2	300	2.0%	1.4	3.5	24.8	2.22	2.77	4.65	1	**3**	**11**
OS-7	0.58	0.65	0.90	0.14	100	2	13.8	250	2.0%	1.4	2.9	16.7	2.68	3.36	5.63	2	**2**	**5**
A	1.13	2.09	5.82	0.12	300	13	18.9	100	2.0%	1.4	1.2	20.1	2.47	3.08	5.18	3	**6**	**30**
B	1.06	1.76	3.87	0.20	230	3	22.6	700	2.0%	1.4	8.2	30.8	1.96	2.44	4.10	2	**4**	**16**
C	0.39	0.48	0.76	0.25	50	1	8.6	700	2.0%	1.4	8.2	16.9	2.67	3.34	5.61	1	**2**	**4**
D	0.05	0.06	0.10	0.30	50	1	8.1					8.1	3.54	4.44	7.46	0.2	**0.3**	**0.7**
E	0.35	0.51	1.06	0.22	100	5	9.3	200	5.5%	4.7	0.7	10.1	3.29	4.12	6.92	1	**2**	**7**
F	0.29	0.33	0.47	0.25	60	2	8.0	200	5.5%	4.7	0.7	8.7	3.46	4.34	7.28	1.0	**1.4**	**3**
G	0.40	0.55	1.03	0.25	300	9	18.5	600	1.5%	1.2	8.2	26.7	2.13	2.66	4.46	1	**1**	**5**

JOB NAME:	*RETREAT AT TIMBERRIDGE FILING NO. 3*
JOB NUMBER:	*1185.30*
DATE:	*01/30/24*
CALC'D BY:	*MAW*

Return Period	1-Hour Depth
2	1.19
5	1.50
10	1.75
25	2.00
50	2.25
100	2.52

$$t_i = \frac{0.395(1.1 - C_5)\sqrt{L}}{S^{0.33}}$$

$$V = C_v S_w^{0.5}$$

Tc=L/V

Table 6-7. Conveyance Coefficient, C_v

Type of Land Surface	C_v
Heavy meadow	2.5
Tillage/field	5
Riprap (not buried)*	6.5
Short pasture and lawns	7
Nearly bare ground	10
Grassed waterway	15
Paved areas and shallow paved swales	20

$$t_c = \frac{L}{180} + 10$$

*For buried riprap, select C_v value based on type of vegetative cover.

FINAL DRAINAGE REPORT ~ BASIN RUNOFF SUMMARY

BASIN	WEIGHTED CA(2)	WEIGHTED CA(5)	WEIGHTED CA(100)	OVERLAND C(5)	OVERLAND Length (ft)	OVERLAND Height (ft)	OVERLAND Tc (min)	STREET / CHANNEL FLOW Length (ft)	STREET / CHANNEL FLOW Slope (%)	STREET / CHANNEL FLOW Velocity (fps)	STREET / CHANNEL FLOW Tc (min)	Tc TOTAL (min)	INTENSITY I(2) (in/hr)	INTENSITY I(5) (in/hr)	INTENSITY I(100) (in/hr)	TOTAL FLOWS Q(2) (cfs)	TOTAL FLOWS Q(5) (cfs)	TOTAL FLOWS Q(100) (cfs)
H1	0.29	0.46	1.09	0.12	100	8	8.9					8.9	3.43	4.30	7.22	1	**2**	**8**
H2	0.46	0.72	1.44	0.16	100	12	7.5					7.5	3.64	4.57	7.67	2	**3**	**11**
I	0.13	0.31	1.01	0.12	300	4	27.9					27.9	2.08	2.59	4.35	0.3	**0.8**	**4**
J1	0.34	0.49	1.08	0.12	300	12	19.4					19.4	2.51	3.14	5.26	1	**2**	**6**
J2	0.02	0.05	0.16	0.12	160	4	16.5					16.5	2.70	3.37	5.66	0.1	**0.2**	**0.9**
K	0.63	0.83	1.60	0.12	300	8	22.2					22.2	2.35	2.93	4.93	1	**2**	**8**
L	0.40	0.70	1.67	0.14	300	12	19.0					19.0	2.53	3.17	5.32	1	**2**	**9**
M	0.34	0.36	0.43	0.12	15	0.3	5.5	350	1.5%	2.4	2.4	7.8	3.59	4.50	7.55	1	**2**	**3**
N	0.28	0.30	0.39	0.12	15	0.3	5.5	350	1.5%	2.4	2.4	7.8	3.59	4.50	7.55	1	**1**	**3**
O	0.03	0.07	0.24	0.12	100	6	9.8					9.8	3.32	4.16	6.98	0.1	**0.3**	**2**

JOB NAME: *RETREAT AT TIMBERRIDGE FILING NO. 3*
JOB NUMBER: *1185.30*
DATE: *01/30/24*
CALCULATED BY: *MAW*

FINAL DRAINAGE REPORT ~ SURFACE ROUTING SUMMARY

Design Point(s)	Contributing Basins	Equivalent CA(5)	Equivalent CA(100)	Maximum Tc	Intensity		Flow		Inlet Size
					I(5)	I(100)	Q(5)	Q(100)	
EX DP-1	Basin EX-1, EX-2, EX-7 and EX-9 (40.4 AC.)	5.38	16.07	40.4	2.03	3.41	11	55	EX. DUAL 30" RCP CULVERTS
EX DP-2	Basin EX-3 (11.1 AC.)	1.16	4.12	22.5	2.92	4.89	3	20	EX. 30" RCP STORM SEWER
EX DP-3	Basin EX-4 (24.7 AC.)	2.11	8.42	29.8	2.49	4.18	5	35	EX. STOCK POND
1	Basin A (14.2 AC.)	2.09	5.82	20.1	3.08	5.18	6	30	EX. 30" RCP CULVERT
2	Basin C (1.4 AC.)	0.48	0.76	16.9	3.34	5.61	2	4	5' TYPE R SUMP INLET
3	Basins B, OS-2 and D (9.47 AC.)	1.92	4.19	30.8	2.44	4.10	5	21	15' TYPE R SUMP INLET
4	Basins F and OS-7 (2.2 AC.)	0.98	1.37	16.7	3.36	5.63	2	8	EX. 10' TYPE R AT-GRADE INLET
5	Basins E and OS-3 (6.5 AC.)	1.56	3.03	17.7	3.27	5.50	5	17	EX. 15' TYPE R AT-GRADE INLET
6	Basin OS-1 (24.1 AC.)	2.17	8.68	29.8	2.49	4.18	5	35	PROP. TEMP. SEDIMENT BASIN
7	Basin OS-4 (3.3 AC.)	0.59	1.43	25.8	2.71	4.54	2	6	PROP. TYPE C CDOT INLET
8	Basin N (0.55 AC.)	0.30	0.39	7.8	4.50	7.55	1	3	5' TYPE R SUMP INLET
9	Basin M (0.54 AC.)	0.36	0.43	7.8	4.50	7.55	2	3	5' TYPE R SUMP INLET

JOB NAME: *RETREAT AT TIMBERRIDGE FILING NO. 3*
JOB NUMBER: *1185.30*
DATE: *01/30/24*
CALCULATED BY: *MAW*

FINAL DRAINAGE REPORT ~ SURFACE ROUTING SUMMARY

Design Point(s)	Contributing Basins	Equivalent CA(5)	Equivalent CA(100)	Maximum Tc	Intensity		Flow		Inlet Size
					I(5)	I(100)	Q(5)	Q(100)	
10	Basins OS-4, N, M, O (5.0 AC.)	1.33	2.48	26.1	2.69	4.51	4	11	PROP. RAIN GARDEN 1
11	Basin OS-6 (5.9 AC.)	0.94	2.42	24.8	2.77	4.65	3	11	PROP. RIP-RAP RUNDOWN
12	Basins EX-7, K, L and EX-9 (40.8 AC.)	6.13	16.77	40.4	2.03	3.41	12	57	EX. DUAL 30" RCP CULVERTS

JOB NAME: *RETREAT AT TIMBERRIDGE FILING NO. 3*
JOB NUMBER: *1185.30*
DATE: *01/30/24*
CALCULATED BY: *MAW*

* PIPES ARE LISTED AT MAXIMUM SIZE REQUIRED TO ACCOMMODATE Q100 FLOWS AT MINIMUM GRADE.
REFER TO INDIVIDUAL PIPE SHEETS FOR HYDRAULIC INFORMATION.

FINAL DRAINAGE REPORT ~ PIPE ROUTING SUMMARY

Pipe Run	Contributing Basins	Equivalent CA(5)	Equivalent CA(100)	Maximum Tc	Intensity		Flow		Pipe Size*
					I(5)	I(100)	Q(5)	Q(100)	
1	DP-1	2.09	5.82	20.1	3.08	5.18	6	30	30" RCP
2	DP-2	0.48	0.76	16.9	3.34	5.61	2	4	18" RCP
3	DP-3	1.92	4.19	30.8	2.44	4.10	5	21	30" RCP
4	PR-1, PR-2 and PR-3	4.50	10.77	20.9	3.03	5.08	14	55	36" RCP
5	DP-7	0.59	1.43	25.8	2.71	4.54	2	6	18" RCP
6	DP-8	0.30	0.39	7.8	4.50	7.55	1	3	18" RCP
7	DP-9	0.36	0.43	7.8	4.50	7.55	2	3	18" RCP
8	PR-6 and PR-7	0.66	0.81	7.8	4.50	7.55	3	6	24" RCP
9	PR-5, PR-8	1.25	2.24	26.0	2.69	4.52	3	10	24" RCP

EFFECTIVE IMPERVIOUSNESS - RAIN GARDEN 1

Basin	Acreage	Imp.%
OS-4	3.30	13.3%
M	0.54	65.1%
N	0.55	52.7%
O	0.61	7.0%
Total	**5.0**	**22.4%**

EFFECTIVE IMPERVIOUSNESS - FUTURE RAIN GARDEN 2

Basin	Acreage	Imp.%
OS-6	5.9	14.0%
Total	**5.9**	**14.0%**

CIRCULAR CONDUIT FLOW (Normal & Critical Depth Computation)

MHFD-Culvert, Version 4.00 (May 2020)

Project: RETREAT AT TIMBERRIDGE FILING NO. 3

Pipe ID: DP-1 (Exist. 30" RCP Pipe)

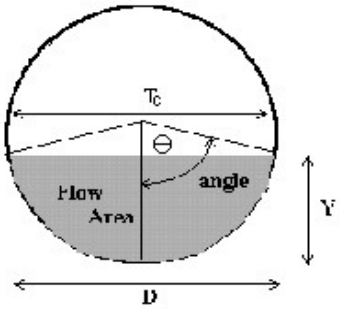

Design Information (Input)			
Pipe Invert Slope	So =	0.0100	ft/ft
Pipe Manning's n-value	n =	0.0130	
Pipe Diameter	D =	30.00	inches
Design discharge	Q =	30.00	cfs

Full-Flow Capacity (Calculated)			
Full-flow area	Af =	4.91	sq ft
Full-flow wetted perimeter	Pf =	7.85	ft
Half Central Angle	Theta =	3.14	radians
Full-flow capacity	Qf =	41.13	cfs

Calculation of Normal Flow Condition			
Half Central Angle (0<Theta<3.14)	Theta =	1.84	radians
Flow area	An =	3.28	sq ft
Top width	Tn =	2.41	ft
Wetted perimeter	Pn =	4.60	ft
Flow depth	Yn =	1.58	ft
Flow velocity	Vn =	9.14	fps
Discharge	Qn =	30.00	cfs
Percent of Full Flow	Flow =	72.9%	of full flow
Normal Depth Froude Number	Fr_n =	1.38	supercritical

Calculation of Critical Flow Condition			
Half Central Angle (0<Theta-c<3.14)	Theta-c =	2.09	radians
Critical flow area	Ac =	3.93	sq ft
Critical top width	Tc =	2.17	ft
Critical flow depth	Yc =	1.87	ft
Critical flow velocity	Vc =	7.63	fps
Critical Depth Froude Number	Fr_c =	1.00	

Version 4.05 Released March 2017

ALLOWABLE CAPACITY FOR ONE-HALF OF STREET (Minor & Major Storm)

(Based on Regulated Criteria for Maximum Allowable Flow Depth and Spread)

Project: RETREAT AT TIMBERRIDGE FILING NO. 3

Inlet ID: DP-2

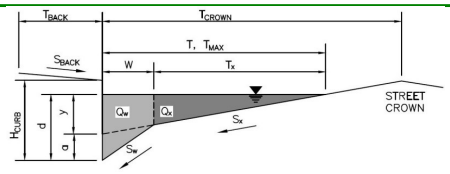

Gutter Geometry (Enter data in the blue cells)

Maximum Allowable Width for Spread Behind Curb	T_{BACK} =	7.5	ft
Side Slope Behind Curb (leave blank for no conveyance credit behind curb)	S_{BACK} =	0.020	ft/ft
Manning's Roughness Behind Curb (typically between 0.012 and 0.020)	n_{BACK} =	0.013	
Height of Curb at Gutter Flow Line	H_{CURB} =	6.00	inches
Distance from Curb Face to Street Crown	T_{CROWN} =	17.0	ft
Gutter Width	W =	2.00	ft
Street Transverse Slope	S_X =	0.020	ft/ft
Gutter Cross Slope (typically 2 inches over 24 inches or 0.083 ft/ft)	S_W =	0.083	ft/ft
Street Longitudinal Slope - Enter 0 for sump condition	S_O =	0.000	ft/ft
Manning's Roughness for Street Section (typically between 0.012 and 0.020)	n_{STREET} =	0.016	

		Minor Storm	Major Storm	
Max. Allowable Spread for Minor & Major Storm	T_{MAX} =	17.0	17.0	ft
Max. Allowable Depth at Gutter Flowline for Minor & Major Storm	d_{MAX} =	6.0	12.0	inches
Check boxes are not applicable in SUMP conditions		☐	☐	

		Minor Storm	Major Storm	
MINOR STORM Allowable Capacity is based on Depth Criterion				
MAJOR STORM Allowable Capacity is based on Depth Criterion	**Q_{allow} =**	**SUMP**	**SUMP**	**cfs**

INLET IN A SUMP OR SAG LOCATION

Version 4.05 Released March 2017

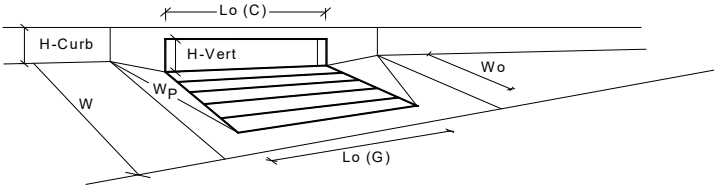

Design Information (Input) CDOT Type R Curb Opening		MINOR	MAJOR	
Type of Inlet	Type =	CDOT Type R Curb Opening		
Local Depression (additional to continuous gutter depression 'a' from above)	a_{local} =	3.00	3.00	inches
Number of Unit Inlets (Grate or Curb Opening)	No =	1	1	
Water Depth at Flowline (outside of local depression)	Ponding Depth =	6.0	12.0	inches
Grate Information		MINOR	MAJOR	☑ Override Depths
Length of a Unit Grate	L_o (G) =	N/A	N/A	feet
Width of a Unit Grate	W_o =	N/A	N/A	feet
Area Opening Ratio for a Grate (typical values 0.15-0.90)	A_{ratio} =	N/A	N/A	
Clogging Factor for a Single Grate (typical value 0.50 - 0.70)	C_f (G) =	N/A	N/A	
Grate Weir Coefficient (typical value 2.15 - 3.60)	C_w (G) =	N/A	N/A	
Grate Orifice Coefficient (typical value 0.60 - 0.80)	C_o (G) =	N/A	N/A	
Curb Opening Information		MINOR	MAJOR	
Length of a Unit Curb Opening	L_o (C) =	5.00	5.00	feet
Height of Vertical Curb Opening in Inches	H_{vert} =	6.00	6.00	inches
Height of Curb Orifice Throat in Inches	H_{throat} =	6.00	6.00	inches
Angle of Throat (see USDCM Figure ST-5)	Theta =	63.40	63.40	degrees
Side Width for Depression Pan (typically the gutter width of 2 feet)	W_p =	2.00	2.00	feet
Clogging Factor for a Single Curb Opening (typical value 0.10)	C_f (C) =	0.10	0.10	
Curb Opening Weir Coefficient (typical value 2.3-3.7)	C_w (C) =	3.60	3.60	
Curb Opening Orifice Coefficient (typical value 0.60 - 0.70)	C_o (C) =	0.67	0.67	
Low Head Performance Reduction (Calculated)		MINOR	MAJOR	
Depth for Grate Midwidth	d_{Grate} =	N/A	N/A	ft
Depth for Curb Opening Weir Equation	d_{Curb} =	0.33	0.83	ft
Combination Inlet Performance Reduction Factor for Long Inlets	$RF_{Combination}$ =	0.77	1.00	
Curb Opening Performance Reduction Factor for Long Inlets	RF_{Curb} =	1.00	1.00	
Grated Inlet Performance Reduction Factor for Long Inlets	RF_{Grate} =	N/A	N/A	
		MINOR	MAJOR	
Total Inlet Interception Capacity (assumes clogged condition)	**Q_a =**	**5.4**	**12.3**	**cfs**
Inlet Capacity IS GOOD for Minor and Major Storms(>Q PEAK)	$Q_{PEAK\ REQUIRED}$ =	2.0	4.0	cfs

Version 4.05 Released March 2017

ALLOWABLE CAPACITY FOR ONE-HALF OF STREET (Minor & Major Storm)

(Based on Regulated Criteria for Maximum Allowable Flow Depth and Spread)

Project: RETREAT AT TIMBERRIDGE FILING NO. 3

Inlet ID: DP-3

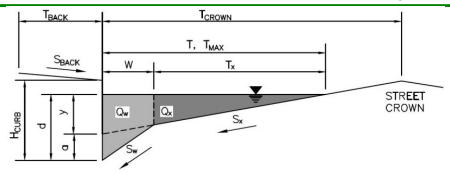

Gutter Geometry (Enter data in the blue cells)

Maximum Allowable Width for Spread Behind Curb	T_{BACK} =	7.5	ft
Side Slope Behind Curb (leave blank for no conveyance credit behind curb)	S_{BACK} =	0.020	ft/ft
Manning's Roughness Behind Curb (typically between 0.012 and 0.020)	n_{BACK} =	0.013	
Height of Curb at Gutter Flow Line	H_{CURB} =	6.00	inches
Distance from Curb Face to Street Crown	T_{CROWN} =	17.0	ft
Gutter Width	W =	2.00	ft
Street Transverse Slope	S_X =	0.020	ft/ft
Gutter Cross Slope (typically 2 inches over 24 inches or 0.083 ft/ft)	S_W =	0.083	ft/ft
Street Longitudinal Slope - Enter 0 for sump condition	S_O =	0.000	ft/ft
Manning's Roughness for Street Section (typically between 0.012 and 0.020)	n_{STREET} =	0.016	

		Minor Storm	Major Storm	
Max. Allowable Spread for Minor & Major Storm	T_{MAX} =	17.0	17.0	ft
Max. Allowable Depth at Gutter Flowline for Minor & Major Storm	d_{MAX} =	6.0	12.0	inches
Check boxes are not applicable in SUMP conditions		☐	☐	

		Minor Storm	Major Storm	
MINOR STORM Allowable Capacity is based on Depth Criterion				
MAJOR STORM Allowable Capacity is based on Depth Criterion	**Q_{allow} =**	**SUMP**	**SUMP**	**cfs**

INLET IN A SUMP OR SAG LOCATION

Version 4.05 Released March 2017

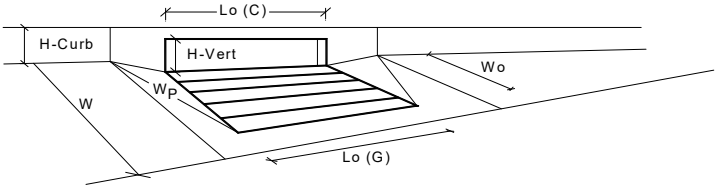

Design Information (Input)	CDOT Type R Curb Opening		MINOR	MAJOR	
Type of Inlet		Type =	CDOT Type R Curb Opening		
Local Depression (additional to continuous gutter depression 'a' from above)		a_{local} =	3.00	3.00	inches
Number of Unit Inlets (Grate or Curb Opening)		No =	1	1	
Water Depth at Flowline (outside of local depression)		Ponding Depth =	6.0	12.0	inches
Grate Information			MINOR	MAJOR	☑ Override Depths
Length of a Unit Grate		L_o (G) =	N/A	N/A	feet
Width of a Unit Grate		W_o =	N/A	N/A	feet
Area Opening Ratio for a Grate (typical values 0.15-0.90)		A_{ratio} =	N/A	N/A	
Clogging Factor for a Single Grate (typical value 0.50 - 0.70)		C_f (G) =	N/A	N/A	
Grate Weir Coefficient (typical value 2.15 - 3.60)		C_w (G) =	N/A	N/A	
Grate Orifice Coefficient (typical value 0.60 - 0.80)		C_o (G) =	N/A	N/A	
Curb Opening Information			MINOR	MAJOR	
Length of a Unit Curb Opening		L_o (C) =	15.00	15.00	feet
Height of Vertical Curb Opening in Inches		H_{vert} =	6.00	6.00	inches
Height of Curb Orifice Throat in Inches		H_{throat} =	6.00	6.00	inches
Angle of Throat (see USDCM Figure ST-5)		Theta =	63.40	63.40	degrees
Side Width for Depression Pan (typically the gutter width of 2 feet)		W_p =	2.00	2.00	feet
Clogging Factor for a Single Curb Opening (typical value 0.10)		C_f (C) =	0.10	0.10	
Curb Opening Weir Coefficient (typical value 2.3-3.7)		C_w (C) =	3.60	3.60	
Curb Opening Orifice Coefficient (typical value 0.60 - 0.70)		C_o (C) =	0.67	0.67	
Low Head Performance Reduction (Calculated)			MINOR	MAJOR	
Depth for Grate Midwidth		d_{Grate} =	N/A	N/A	ft
Depth for Curb Opening Weir Equation		d_{Curb} =	0.33	0.83	ft
Combination Inlet Performance Reduction Factor for Long Inlets		$RF_{Combination}$ =	0.57	1.00	
Curb Opening Performance Reduction Factor for Long Inlets		RF_{Curb} =	0.79	1.00	
Grated Inlet Performance Reduction Factor for Long Inlets		RF_{Grate} =	N/A	N/A	
			MINOR	MAJOR	
Total Inlet Interception Capacity (assumes clogged condition)		**Q_a =**	**9.7**	**39.1**	**cfs**
Inlet Capacity IS GOOD for Minor and Major Storms(>Q PEAK)		$Q_{PEAK\ REQUIRED}$ =	6.0	21.0	cfs

Version 4.05 Released March 2017

ALLOWABLE CAPACITY FOR ONE-HALF OF STREET (Minor & Major Storm)

(Based on Regulated Criteria for Maximum Allowable Flow Depth and Spread)

Project: RETREAT AT TIMBERRIDGE FILING NO. 3

Inlet ID: DP-4

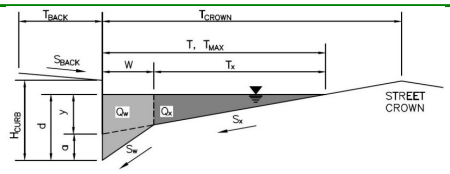

Gutter Geometry (Enter data in the blue cells)

Maximum Allowable Width for Spread Behind Curb	T_{BACK} =	7.5	ft
Side Slope Behind Curb (leave blank for no conveyance credit behind curb)	S_{BACK} =	0.020	ft/ft
Manning's Roughness Behind Curb (typically between 0.012 and 0.020)	n_{BACK} =	0.013	
Height of Curb at Gutter Flow Line	H_{CURB} =	6.00	inches
Distance from Curb Face to Street Crown	T_{CROWN} =	17.0	ft
Gutter Width	W =	2.00	ft
Street Transverse Slope	S_X =	0.020	ft/ft
Gutter Cross Slope (typically 2 inches over 24 inches or 0.083 ft/ft)	S_W =	0.083	ft/ft
Street Longitudinal Slope - Enter 0 for sump condition	S_O =	0.017	ft/ft
Manning's Roughness for Street Section (typically between 0.012 and 0.020)	n_{STREET} =	0.016	

		Minor Storm	Major Storm	
Max. Allowable Spread for Minor & Major Storm	T_{MAX} =	17.0	17.0	ft
Max. Allowable Depth at Gutter Flowline for Minor & Major Storm	d_{MAX} =	6.0	12.0	inches
Allow Flow Depth at Street Crown (leave blank for no)		☐	☐	check = yes

		Minor Storm	Major Storm	
MINOR STORM Allowable Capacity is based on Spread Criterion				
MAJOR STORM Allowable Capacity is based on Spread Criterion	**Q_{allow} =**	**14.2**	**14.2**	**cfs**

Minor storm max. allowable capacity GOOD - greater than the design flow given on sheet 'Inlet Management'

Major storm max. allowable capacity GOOD - greater than the design flow given on sheet 'Inlet Management'

INLET ON A CONTINUOUS GRADE

Version 4.05 Released March 2017

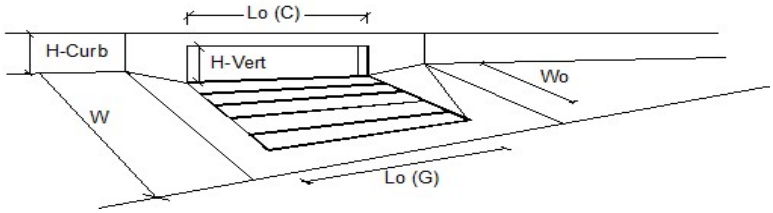

Design Information (Input)	CDOT Type R Curb Opening		MINOR	MAJOR	
Type of Inlet		Type =	CDOT Type R Curb Opening		
Local Depression (additional to continuous gutter depression 'a')		a_{LOCAL} =	3.0	3.0	inches
Total Number of Units in the Inlet (Grate or Curb Opening)		No =	1	1	
Length of a Single Unit Inlet (Grate or Curb Opening)		L_o =	10.00	10.00	ft
Width of a Unit Grate (cannot be greater than W, Gutter Width)		W_o =	N/A	N/A	ft
Clogging Factor for a Single Unit Grate (typical min. value = 0.5)		C_f-G =	N/A	N/A	
Clogging Factor for a Single Unit Curb Opening (typical min. value = 0.1)		C_f-C =	0.10	0.10	
Street Hydraulics: OK - Q < Allowable Street Capacity'			MINOR	MAJOR	
Total Inlet Interception Capacity		**Q =**	**3.0**	**6.3**	**cfs**
Total Inlet Carry-Over Flow (flow bypassing inlet)		**Q_b =**	**0.0**	**1.7**	**cfs**
Capture Percentage = Q_a/Q_o =		**C% =**	**100**	**79**	**%**

Version 4.05 Released March 2017

ALLOWABLE CAPACITY FOR ONE-HALF OF STREET (Minor & Major Storm)

(Based on Regulated Criteria for Maximum Allowable Flow Depth and Spread)

Project: RETREAT AT TIMBERRIDGE FILING NO. 3

Inlet ID: DP-5

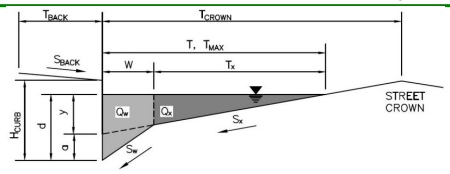

Gutter Geometry (Enter data in the blue cells)

Maximum Allowable Width for Spread Behind Curb	T_{BACK} =	7.5	ft
Side Slope Behind Curb (leave blank for no conveyance credit behind curb)	S_{BACK} =	0.020	ft/ft
Manning's Roughness Behind Curb (typically between 0.012 and 0.020)	n_{BACK} =	0.013	
Height of Curb at Gutter Flow Line	H_{CURB} =	6.00	inches
Distance from Curb Face to Street Crown	T_{CROWN} =	17.0	ft
Gutter Width	W =	2.00	ft
Street Transverse Slope	S_X =	0.020	ft/ft
Gutter Cross Slope (typically 2 inches over 24 inches or 0.083 ft/ft)	S_W =	0.083	ft/ft
Street Longitudinal Slope - Enter 0 for sump condition	S_O =	0.017	ft/ft
Manning's Roughness for Street Section (typically between 0.012 and 0.020)	n_{STREET} =	0.016	

		Minor Storm	Major Storm	
Max. Allowable Spread for Minor & Major Storm	T_{MAX} =	17.0	17.0	ft
Max. Allowable Depth at Gutter Flowline for Minor & Major Storm	d_{MAX} =	6.0	12.0	inches
Allow Flow Depth at Street Crown (leave blank for no)		☐	☐	check = yes

		Minor Storm	Major Storm	
MINOR STORM Allowable Capacity is based on Spread Criterion				
MAJOR STORM Allowable Capacity is based on Spread Criterion	**Q_{allow} =**	**14.2**	**14.2**	**cfs**

Minor storm max. allowable capacity GOOD - greater than the design flow given on sheet 'Inlet Management'

WARNING: MAJOR STORM max. allowable capacity is less than the design flow given on sheet 'Inlet Management'

INLET ON A CONTINUOUS GRADE

Version 4.05 Released March 2017

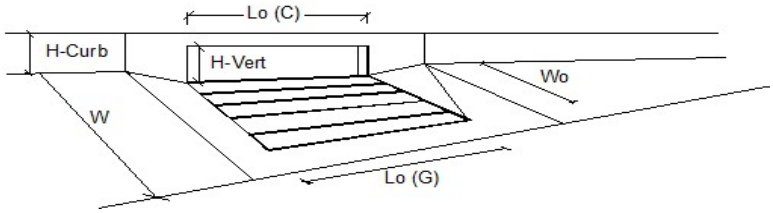

Design Information (Input)	CDOT Type R Curb Opening		MINOR	MAJOR	
Type of Inlet		Type =	CDOT Type R Curb Opening		
Local Depression (additional to continuous gutter depression 'a')		a_{LOCAL} =	3.0	3.0	inches
Total Number of Units in the Inlet (Grate or Curb Opening)		No =	1	1	
Length of a Single Unit Inlet (Grate or Curb Opening)		L_o =	15.00	15.00	ft
Width of a Unit Grate (cannot be greater than W, Gutter Width)		W_o =	N/A	N/A	ft
Clogging Factor for a Single Unit Grate (typical min. value = 0.5)		C_f-G =	N/A	N/A	
Clogging Factor for a Single Unit Curb Opening (typical min. value = 0.1)		C_f-C =	0.10	0.10	

Street Hydraulics: WARNING: Q > ALLOWABLE Q FOR MAJOR STORM		MINOR	MAJOR	
Total Inlet Interception Capacity	**Q =**	**5.0**	**12.7**	**cfs**
Total Inlet Carry-Over Flow (flow bypassing inlet)	**Q_b =**	**0.0**	**4.3**	**cfs**
Capture Percentage = Q_a/Q_o =	**C% =**	**100**	**75**	**%**

CIRCULAR CONDUIT FLOW (Normal & Critical Depth Computation)

MHFD-Culvert, Version 4.00 (May 2020)

Project: RETREAT AT TIMBERRIDGE FILING NO. 3

Pipe ID: DP-7 (Prop. 18" RCP Storm)

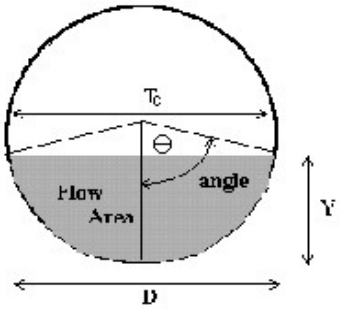

Design Information (Input)			
Pipe Invert Slope	So =	0.0200	ft/ft
Pipe Manning's n-value	n =	0.0130	
Pipe Diameter	D =	18.00	inches
Design discharge	Q =	6.00	cfs

Full-Flow Capacity (Calculated)			
Full-flow area	Af =	1.77	sq ft
Full-flow wetted perimeter	Pf =	4.71	ft
Half Central Angle	Theta =	3.14	radians
Full-flow capacity	Qf =	14.90	cfs

Calculation of Normal Flow Condition			
Half Central Angle (0<Theta<3.14)	Theta =	1.45	radians
Flow area	An =	0.75	sq ft
Top width	Tn =	1.49	ft
Wetted perimeter	Pn =	2.18	ft
Flow depth	Yn =	0.66	ft
Flow velocity	Vn =	7.97	fps
Discharge	Qn =	6.00	cfs
Percent of Full Flow	Flow =	40.3%	of full flow
Normal Depth Froude Number	Fr_n =	1.98	supercritical

Calculation of Critical Flow Condition			
Half Central Angle (0<Theta-c<3.14)	Theta-c =	1.84	radians
Critical flow area	Ac =	1.17	sq ft
Critical top width	Tc =	1.45	ft
Critical flow depth	Yc =	0.95	ft
Critical flow velocity	Vc =	5.11	fps
Critical Depth Froude Number	Fr_c =	1.00	

Culvert Report

Hydraflow Express Extension for Autodesk® Civil 3D® by Autodesk, Inc. Friday, Nov 4 2022

DP-7 (Prop. 18 in. RCP Storm)

Invert Elev Dn (ft)	=	7245.20
Pipe Length (ft)	=	190.00
Slope (%)	=	2.00
Invert Elev Up (ft)	=	7249.00
Rise (in)	=	18.0
Shape	=	Circular
Span (in)	=	18.0
No. Barrels	=	1
n-Value	=	0.013
Culvert Type	=	Circular Concrete
Culvert Entrance	=	Groove end projecting (C)
Coeff. K,M,c,Y,k	=	0.0045, 2, 0.0317, 0.69, 0.2

Embankment

Top Elevation (ft)	=	7253.00
Top Width (ft)	=	20.00
Crest Width (ft)	=	20.00

Calculations

Qmin (cfs)	=	6.00
Qmax (cfs)	=	6.00
Tailwater Elev (ft)	=	(dc+D)/2

Highlighted

Qtotal (cfs)	=	6.00
Qpipe (cfs)	=	6.00
Qovertop (cfs)	=	0.00
Veloc Dn (ft/s)	=	3.89
Veloc Up (ft/s)	=	5.12
HGL Dn (ft)	=	7246.42
HGL Up (ft)	=	7249.95
Hw Elev (ft)	=	7250.39
Hw/D (ft)	=	0.93
Flow Regime	=	Inlet Control

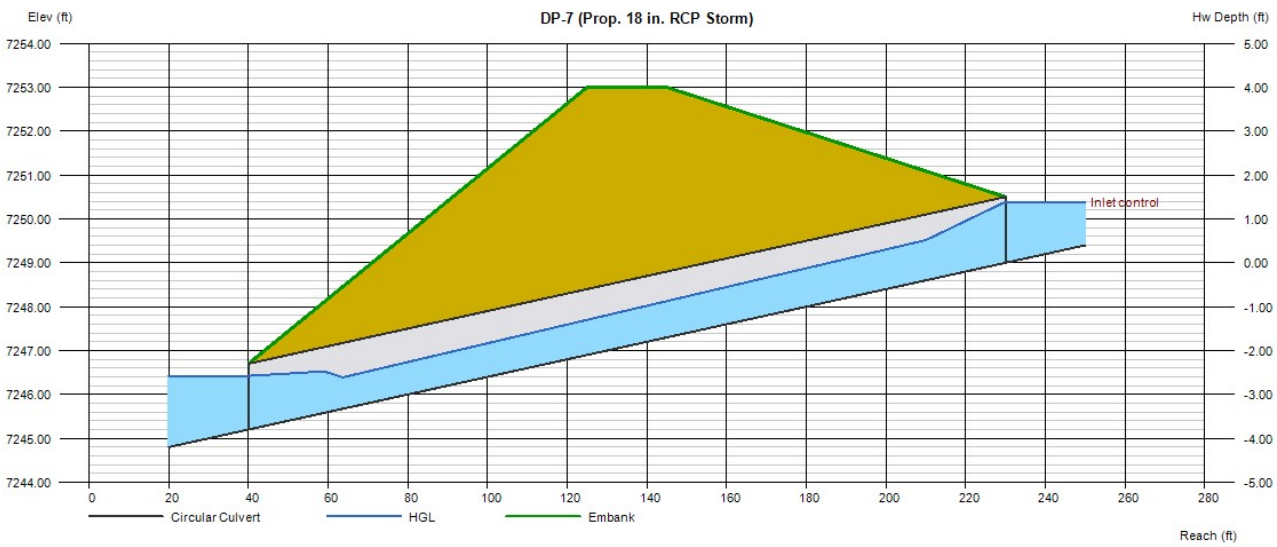

Version 4.05 Released March 2017

ALLOWABLE CAPACITY FOR ONE-HALF OF STREET (Minor & Major Storm)

(Based on Regulated Criteria for Maximum Allowable Flow Depth and Spread)

Project: RETREAT AT TIMBERRIDGE FILING NO. 3

Inlet ID: DP-8

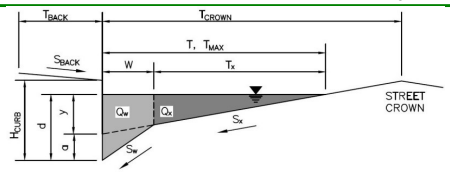

Gutter Geometry (Enter data in the blue cells)

Maximum Allowable Width for Spread Behind Curb	T_{BACK} =	15.0	ft
Side Slope Behind Curb (leave blank for no conveyance credit behind curb)	S_{BACK} =	0.020	ft/ft
Manning's Roughness Behind Curb (typically between 0.012 and 0.020)	n_{BACK} =	0.013	
Height of Curb at Gutter Flow Line	H_{CURB} =	6.00	inches
Distance from Curb Face to Street Crown	T_{CROWN} =	18.0	ft
Gutter Width	W =	2.00	ft
Street Transverse Slope	S_X =	0.020	ft/ft
Gutter Cross Slope (typically 2 inches over 24 inches or 0.083 ft/ft)	S_W =	0.083	ft/ft
Street Longitudinal Slope - Enter 0 for sump condition	S_O =	0.000	ft/ft
Manning's Roughness for Street Section (typically between 0.012 and 0.020)	n_{STREET} =	0.016	

		Minor Storm	Major Storm	
Max. Allowable Spread for Minor & Major Storm	T_{MAX} =	12.0	12.0	ft
Max. Allowable Depth at Gutter Flowline for Minor & Major Storm	d_{MAX} =	6.0	6.0	inches
Check boxes are not applicable in SUMP conditions		☐	☐	

		Minor Storm	Major Storm	
MINOR STORM Allowable Capacity is based on Depth Criterion				
MAJOR STORM Allowable Capacity is based on Depth Criterion	**Q_{allow} =**	**SUMP**	**SUMP**	**cfs**

INLET IN A SUMP OR SAG LOCATION

Version 4.05 Released March 2017

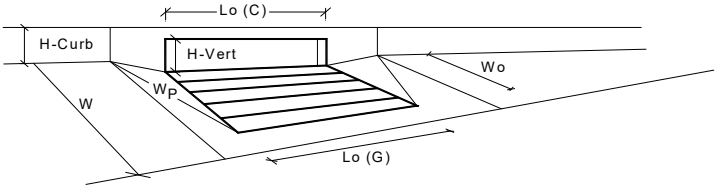

Design Information (Input) CDOT Type R Curb Opening		MINOR	MAJOR	
Type of Inlet	Type =	CDOT Type R Curb Opening		
Local Depression (additional to continuous gutter depression 'a' from above)	a_{local} =	3.00	3.00	inches
Number of Unit Inlets (Grate or Curb Opening)	No =	1	1	
Water Depth at Flowline (outside of local depression)	Ponding Depth =	4.4	6.0	inches
Grate Information		MINOR	MAJOR	☑ Override Depths
Length of a Unit Grate	L_o (G) =	N/A	N/A	feet
Width of a Unit Grate	W_o =	N/A	N/A	feet
Area Opening Ratio for a Grate (typical values 0.15-0.90)	A_{ratio} =	N/A	N/A	
Clogging Factor for a Single Grate (typical value 0.50 - 0.70)	C_f (G) =	N/A	N/A	
Grate Weir Coefficient (typical value 2.15 - 3.60)	C_w (G) =	N/A	N/A	
Grate Orifice Coefficient (typical value 0.60 - 0.80)	C_o (G) =	N/A	N/A	
Curb Opening Information		MINOR	MAJOR	
Length of a Unit Curb Opening	L_o (C) =	5.00	5.00	feet
Height of Vertical Curb Opening in Inches	H_{vert} =	6.00	6.00	inches
Height of Curb Orifice Throat in Inches	H_{throat} =	6.00	6.00	inches
Angle of Throat (see USDCM Figure ST-5)	Theta =	63.40	63.40	degrees
Side Width for Depression Pan (typically the gutter width of 2 feet)	W_p =	2.00	2.00	feet
Clogging Factor for a Single Curb Opening (typical value 0.10)	C_f (C) =	0.10	0.10	
Curb Opening Weir Coefficient (typical value 2.3-3.7)	C_w (C) =	3.60	3.60	
Curb Opening Orifice Coefficient (typical value 0.60 - 0.70)	C_o (C) =	0.67	0.67	
Low Head Performance Reduction (Calculated)		MINOR	MAJOR	
Depth for Grate Midwidth	d_{Grate} =	N/A	N/A	ft
Depth for Curb Opening Weir Equation	d_{Curb} =	0.20	0.33	ft
Combination Inlet Performance Reduction Factor for Long Inlets	$RF_{Combination}$ =	0.56	0.77	
Curb Opening Performance Reduction Factor for Long Inlets	RF_{Curb} =	1.00	1.00	
Grated Inlet Performance Reduction Factor for Long Inlets	RF_{Grate} =	N/A	N/A	
		MINOR	MAJOR	
Total Inlet Interception Capacity (assumes clogged condition)	**Q_a =**	**2.5**	**5.4**	**cfs**
Inlet Capacity IS GOOD for Minor and Major Storms(>Q PEAK)	$Q_{PEAK\ REQUIRED}$ =	1.0	3.0	cfs

Version 4.05 Released March 2017

ALLOWABLE CAPACITY FOR ONE-HALF OF STREET (Minor & Major Storm)

(Based on Regulated Criteria for Maximum Allowable Flow Depth and Spread)

Project: RETREAT AT TIMBERRIDGE FILING NO. 3

Inlet ID: DP-9

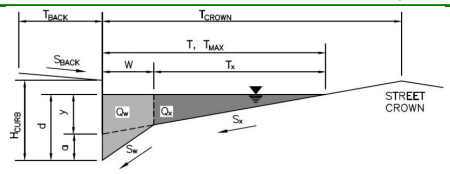

Gutter Geometry (Enter data in the blue cells)

Maximum Allowable Width for Spread Behind Curb	T_{BACK} =	15.0	ft
Side Slope Behind Curb (leave blank for no conveyance credit behind curb)	S_{BACK} =	0.020	ft/ft
Manning's Roughness Behind Curb (typically between 0.012 and 0.020)	n_{BACK} =	0.013	
Height of Curb at Gutter Flow Line	H_{CURB} =	6.00	inches
Distance from Curb Face to Street Crown	T_{CROWN} =	18.0	ft
Gutter Width	W =	2.00	ft
Street Transverse Slope	S_X =	0.020	ft/ft
Gutter Cross Slope (typically 2 inches over 24 inches or 0.083 ft/ft)	S_W =	0.083	ft/ft
Street Longitudinal Slope - Enter 0 for sump condition	S_O =	0.000	ft/ft
Manning's Roughness for Street Section (typically between 0.012 and 0.020)	n_{STREET} =	0.016	

		Minor Storm	Major Storm	
Max. Allowable Spread for Minor & Major Storm	T_{MAX} =	12.0	12.0	ft
Max. Allowable Depth at Gutter Flowline for Minor & Major Storm	d_{MAX} =	6.0	6.0	inches
Check boxes are not applicable in SUMP conditions		☐	☐	

		Minor Storm	Major Storm	
MINOR STORM Allowable Capacity is based on Depth Criterion				
MAJOR STORM Allowable Capacity is based on Depth Criterion	**Q_{allow} =**	**SUMP**	**SUMP**	**cfs**

INLET IN A SUMP OR SAG LOCATION

Version 4.05 Released March 2017

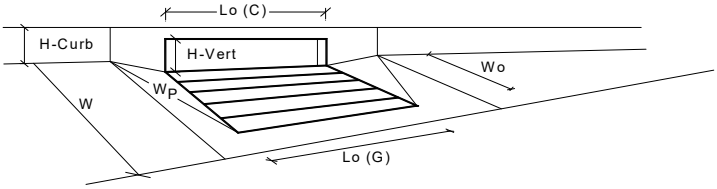

Design Information (Input) CDOT Type R Curb Opening		MINOR	MAJOR	
Type of Inlet	Type =	CDOT Type R Curb Opening		
Local Depression (additional to continuous gutter depression 'a' from above)	a_{local} =	3.00	3.00	inches
Number of Unit Inlets (Grate or Curb Opening)	No =	1	1	
Water Depth at Flowline (outside of local depression)	Ponding Depth =	4.4	6.0	inches
Grate Information		MINOR	MAJOR	☑ Override Depths
Length of a Unit Grate	L_o (G) =	N/A	N/A	feet
Width of a Unit Grate	W_o =	N/A	N/A	feet
Area Opening Ratio for a Grate (typical values 0.15-0.90)	A_{ratio} =	N/A	N/A	
Clogging Factor for a Single Grate (typical value 0.50 - 0.70)	C_f (G) =	N/A	N/A	
Grate Weir Coefficient (typical value 2.15 - 3.60)	C_w (G) =	N/A	N/A	
Grate Orifice Coefficient (typical value 0.60 - 0.80)	C_o (G) =	N/A	N/A	
Curb Opening Information		MINOR	MAJOR	
Length of a Unit Curb Opening	L_o (C) =	5.00	5.00	feet
Height of Vertical Curb Opening in Inches	H_{vert} =	6.00	6.00	inches
Height of Curb Orifice Throat in Inches	H_{throat} =	6.00	6.00	inches
Angle of Throat (see USDCM Figure ST-5)	Theta =	63.40	63.40	degrees
Side Width for Depression Pan (typically the gutter width of 2 feet)	W_p =	2.00	2.00	feet
Clogging Factor for a Single Curb Opening (typical value 0.10)	C_f (C) =	0.10	0.10	
Curb Opening Weir Coefficient (typical value 2.3-3.7)	C_w (C) =	3.60	3.60	
Curb Opening Orifice Coefficient (typical value 0.60 - 0.70)	C_o (C) =	0.67	0.67	
Low Head Performance Reduction (Calculated)		MINOR	MAJOR	
Depth for Grate Midwidth	d_{Grate} =	N/A	N/A	ft
Depth for Curb Opening Weir Equation	d_{Curb} =	0.20	0.33	ft
Combination Inlet Performance Reduction Factor for Long Inlets	$RF_{Combination}$ =	0.56	0.77	
Curb Opening Performance Reduction Factor for Long Inlets	RF_{Curb} =	1.00	1.00	
Grated Inlet Performance Reduction Factor for Long Inlets	RF_{Grate} =	N/A	N/A	
		MINOR	MAJOR	
Total Inlet Interception Capacity (assumes clogged condition)	**Q_a =**	**2.5**	**5.4**	**cfs**
Inlet Capacity IS GOOD for Minor and Major Storms(>Q PEAK)	$Q_{PEAK\ REQUIRED}$ =	2.0	3.0	cfs

DETERMINATION OF CULVERT HEADWATER AND OUTLET PROTECTION

MHFD-Culvert, Version 4.00 (May 2020)

Project: RETREAT AT TIMBERRIDGE FILING NO. 3

ID: 30 in. Future Pond Outfall to Channel

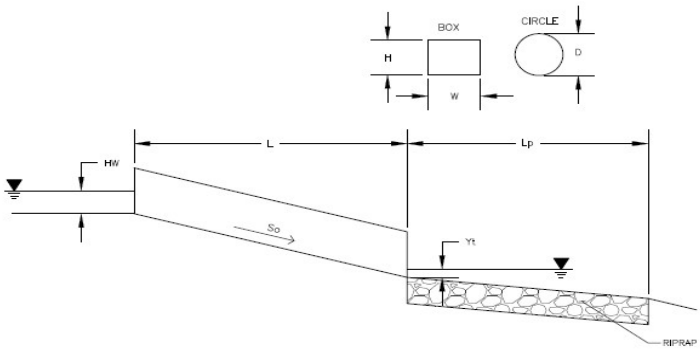

Soil Type:

Choose One:
- (●) Sandy
- ( ) Non-Sandy

Supercritical Flow! Using Adjusted Diameter to calculate protection type.

Design Information:

Design Discharge	Q =	47.8	cfs
Circular Culvert:			
Barrel Diameter in Inches	D =	30	inches
Inlet Edge Type (Choose from pull-down list)		Grooved Edge Projecting	
OR:			
Box Culvert:		**OR**	
Barrel Height (Rise) in Feet	H (Rise) =		ft
Barrel Width (Span) in Feet	W (Span) =		ft
Inlet Edge Type (Choose from pull-down list)			
Number of Barrels	# Barrels =	1	
Inlet Elevation	Elev IN =	7232.88	ft
Outlet Elevation **OR** Slope	Elev OUT =	7230.45	ft
Culvert Length	L =	86.65	ft
Manning's Roughness	n =	0.013	
Bend Loss Coefficient	k_b =	0	
Exit Loss Coefficient	k_x =	1	
Tailwater Surface Elevation	$Y_{t,\ Elevation}$ =		ft
Max Allowable Channel Velocity	V =	5	ft/s

Calculated Results:

Culvert Cross Sectional Area Available	A =	4.91	ft^2
Culvert Normal Depth	Y_n =	1.53	ft
Culvert Critical Depth	Y_c =	2.27	ft
Froude Number	Fr =	2.35	**Supercritical!**
Entrance Loss Coefficient	k_e =	0.20	
Friction Loss Coefficient	k_f =	0.79	
Sum of All Loss Coefficients	k_s =	1.99	ft
Headwater:			
Inlet Control Headwater	HW_I =	4.69	ft
Outlet Control Headwater	HW_O =	2.89	ft
Design Headwater Elevation	**HW =**	**7237.57**	**ft**
Headwater/Diameter OR Headwater/Rise Ratio	**HW/D =**	**1.88**	**HW/D > 1.5!**
Outlet Protection:			
Flow/(Diameter^2.5)	Q/D^2.5 =	4.84	$ft^{0.5}/s$
Tailwater Surface Height	Y_t =	1.00	ft
Tailwater/Diameter	Yt/D =	0.40	
Expansion Factor	1/(2*tan(Θ)) =	2.59	
Flow Area at Max Channel Velocity	A_t =	9.56	ft^2
Width of Equivalent Conduit for Multiple Barrels	W_{eq} =	-	ft
Length of Riprap Protection	**L_p =**	**19**	**ft**
Width of Riprap Protection at Downstream End	**T =**	**10**	**ft**
Adjusted Diameter for Supercritical Flow	Da =	2.02	ft
Minimum Theoretical Riprap Size	d_{50} min=	11	in
Nominal Riprap Size	d_{50} nominal=	12	in
MHFD Riprap Type	**Type =**	**M**	

DETERMINATION OF CULVERT HEADWATER AND OUTLET PROTECTION

MHFD-Culvert, Version 4.00 (May 2020)

Project: RETREAT AT TIMBERRIDGE FILING NO. 3

ID: Rain Garden 1 Outfall

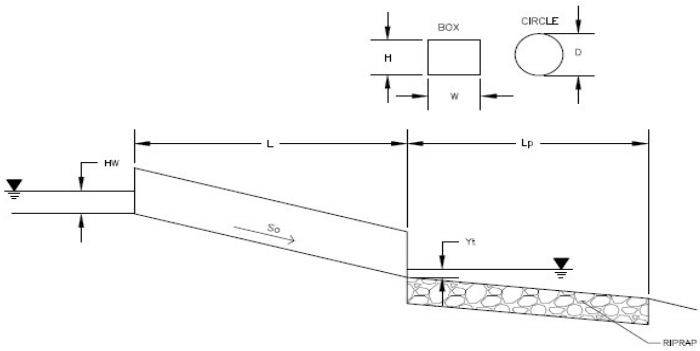

Soil Type:

Choose One:
- (●) Sandy
- ( ) Non-Sandy

Supercritical Flow! Using Adjusted Diameter to calculate protection type.

Design Information:			
Design Discharge	Q =	10	cfs
Circular Culvert:			
Barrel Diameter in Inches	D =	24	inches
Inlet Edge Type (Choose from pull-down list)		Grooved Edge Projecting	
OR:			
Box Culvert:		**OR**	
Barrel Height (Rise) in Feet	H (Rise) =		ft
Barrel Width (Span) in Feet	W (Span) =		ft
Inlet Edge Type (Choose from pull-down list)			
Number of Barrels	# Barrels =	1	
Inlet Elevation	Elev IN =	7234.25	ft
Outlet Elevation **OR** Slope	Elev OUT =	7234	ft
Culvert Length	L =	25.39	ft
Manning's Roughness	n =	0.013	
Bend Loss Coefficient	k_b =	0	
Exit Loss Coefficient	k_x =	1	
Tailwater Surface Elevation	$Y_{t,\ Elevation}$ =		ft
Max Allowable Channel Velocity	V =	5	ft/s
Calculated Results:			
Culvert Cross Sectional Area Available	A =	3.14	ft^2
Culvert Normal Depth	Y_n =	0.93	ft
Culvert Critical Depth	Y_c =	1.13	ft
Froude Number	Fr =	1.44	**Supercritical!**
Entrance Loss Coefficient	k_e =	0.20	
Friction Loss Coefficient	k_f =	0.31	
Sum of All Loss Coefficients	k_s =	1.51	ft
Headwater:			
Inlet Control Headwater	HW_I =	1.63	ft
Outlet Control Headwater	HW_O =	1.55	ft
Design Headwater Elevation	**HW =**	**7235.88**	**ft**
Headwater/Diameter OR Headwater/Rise Ratio	**HW/D =**	**0.81**	
Outlet Protection:			
Flow/(Diameter^2.5)	Q/D^2.5 =	1.77	$ft^{0.5}/s$
Tailwater Surface Height	Y_t =	0.80	ft
Tailwater/Diameter	Yt/D =	0.40	
Expansion Factor	1/(2*tan(Θ)) =	5.96	
Flow Area at Max Channel Velocity	A_t =	2.00	ft^2
Width of Equivalent Conduit for Multiple Barrels	W_{eq} =	-	ft
Length of Riprap Protection	**L_p =**	**6**	**ft**
Width of Riprap Protection at Downstream End	**T =**	**4**	**ft**
Adjusted Diameter for Supercritical Flow	Da =	1.47	ft
Minimum Theoretical Riprap Size	d_{50} min=	3	in
Nominal Riprap Size	d_{50} nominal=	6	in
MHFD Riprap Type	**Type =**	**VL**	

DETERMINATION OF CULVERT HEADWATER AND OUTLET PROTECTION

MHFD-Culvert, Version 4.00 (May 2020)

Project: RETREAT AT TIMBERRIDGE FILING NO. 3

ID: 18 in. RG 1 Pond Outfall to Channel

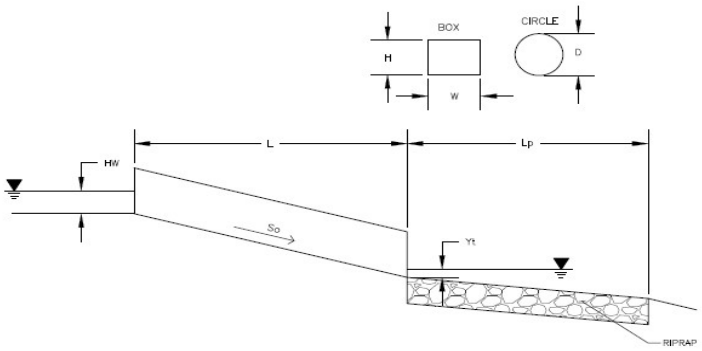

Soil Type:

Choose One:
- (●) Sandy
- ( ) Non-Sandy

Supercritical Flow! Using Adjusted Diameter to calculate protection type.

Design Information:

Design Discharge	Q =	7	cfs
Circular Culvert:			
Barrel Diameter in Inches	D =	18	inches
Inlet Edge Type (Choose from pull-down list)		Grooved Edge Projecting	
OR:			
Box Culvert:		**OR**	
Barrel Height (Rise) in Feet	H (Rise) =		ft
Barrel Width (Span) in Feet	W (Span) =		ft
Inlet Edge Type (Choose from pull-down list)			
Number of Barrels	# Barrels =	1	
Inlet Elevation	Elev IN =	7231.2	ft
Outlet Elevation **OR** Slope	Elev OUT =	7229	ft
Culvert Length	L =	48.1	ft
Manning's Roughness	n =	0.013	
Bend Loss Coefficient	k_b =	0	
Exit Loss Coefficient	k_x =	1	
Tailwater Surface Elevation	$Y_{t,\ Elevation}$ =		ft
Max Allowable Channel Velocity	V =	5	ft/s

Calculated Results:

Culvert Cross Sectional Area Available	A =	1.77	ft^2
Culvert Normal Depth	Y_n =	0.72	ft
Culvert Critical Depth	Y_c =	1.02	ft
Froude Number	Fr =	1.95	**Supercritical!**
Entrance Loss Coefficient	k_e =	0.20	
Friction Loss Coefficient	k_f =	0.87	
Sum of All Loss Coefficients	k_s =	2.07	ft
Headwater:			
Inlet Control Headwater	HW_I =	1.52	ft
Outlet Control Headwater	HW_O =	N/A	ft
Design Headwater Elevation	**HW =**	**7232.72**	**ft**
Headwater/Diameter OR Headwater/Rise Ratio	**HW/D =**	**1.01**	

Outlet Control Headwater Approximation Method Inaccurate for Low Flow - Backwater Calculations Required

Outlet Protection:			
Flow/(Diameter^2.5)	Q/D^2.5 =	2.54	$ft^{0.5}/s$
Tailwater Surface Height	Y_t =	0.60	ft
Tailwater/Diameter	Yt/D =	0.40	
Expansion Factor	1/(2*tan(Θ)) =	5.01	
Flow Area at Max Channel Velocity	A_t =	1.40	ft^2
Width of Equivalent Conduit for Multiple Barrels	W_{eq} =	-	ft
Length of Riprap Protection	**L_p =**	**5**	**ft**
Width of Riprap Protection at Downstream End	**T =**	**3**	**ft**
Adjusted Diameter for Supercritical Flow	Da =	1.11	ft
Minimum Theoretical Riprap Size	d_{50} min=	3	in
Nominal Riprap Size	d_{50} nominal=	6	in
MHFD Riprap Type	**Type =**	**VL**	

ROADSIDE DITCH CALCUALTIONS

Arroya Lane - North side of roadway (Sta. 0+25 to Sta. 3+50)

		Erosion Control Blanket (ECB)		**Turf Reinforcement Mat (TRM)**		**Revegetation - Grass lined**
		(North American Green - SC150)		**(North American Green - P300)**		**(Native Seed Mix)**
	Given:	**(Permanent)**		**(Permanent)**		
	Design Flow (cfs)	3.0		3.0		3.0
	Permissible Shear (lbs/ft.^{2})	2.0		8.0		0.1
	Permissible Velocity (ft./sec.)	8.0		16.0		3.0
	Safety Factor	1		1		1
	Ditch Slope (Max.)	3.5%		3.5%		3.5%
	Ditch Section (24 in. depth)	V-Ditch		V-Ditch		V-Ditch
	Flow Area (ft.^{2})	1.96		9.00		1.96
	Wetted Perimeter (ft.)	5.78		12.39		5.78
	Hydraulic Radius	0.34		0.73		0.34
	Mannings n	0.035		0.030		0.030
	Depth of Flow (max.)	0.7		1.5		0.7
	Calculations:					
	Shear Stress (lbs/ft.^{2})	1.5		3.3		1.5
	Velocity (ft./sec.)	1.5		0.3		1.5
	Allowed Flow (cfs)	7.6		67.6		8.9

ROADSIDE DITCH CALCUALTIONS

Arroya Lane - South side of roadway (Sta. 0+25 to Sta. 3+50)

		Erosion Control Blanket (ECB)		**Turf Reinforcement Mat (TRM)**		**Revegetation - Grass lined**
		(North American Green - SC150)		**(North American Green - P300)**		**(Native Seed Mix)**
	Given:	**(Permanent)**		**(Permanent)**		
	Design Flow (cfs)	1.0		1.0		1.0
	Permissible Shear (lbs/ft.^{2})	2.0		8.0		0.1
	Permissible Velocity (ft./sec.)	8.0		16.0		3.0
	Safety Factor	1		1		1
	Ditch Slope (Max.)	3.5%		3.5%		3.5%
	Ditch Section (24 in. depth)	V-Ditch		V-Ditch		V-Ditch
	Flow Area (ft.^{2})	1.96		9.00		1.96
	Wetted Perimeter (ft.)	5.78		12.39		5.78
	Hydraulic Radius	0.34		0.73		0.34
	Mannings n	0.035		0.030		0.030
	Depth of Flow (max.)	0.7		1.5		0.7
	Calculations:					
	Shear Stress (lbs/ft.^{2})	1.5		3.3		1.5
	Velocity (ft./sec.)	0.5		0.1		0.5
	Allowed Flow (cfs)	7.6		67.6		8.9

ROADSIDE DITCH CALCUALTIONS

Arroya Lane - North side of roadway (Sta. 3+50 to Sta. 7+25)

		Erosion Control Blanket (ECB)		**Turf Reinforcement Mat (TRM)**		**Revegetation - Grass lined**
		(North American Green - SC150)		**(North American Green - P300)**		**(Native Seed Mix)**
	Given:	**(Permanent)**		**(Permanent)**		
	Design Flow (cfs)	5.0		5.0		5.0
	Permissible Shear (lbs/ft.^{2})	2.0		8.0		0.1
	Permissible Velocity (ft./sec.)	8.0		16.0		3.0
	Safety Factor	1		1		1
	Ditch Slope (Max.)	2.0%		2.0%		2.0%
	Ditch Section (24 in. depth)	V-Ditch		V-Ditch		V-Ditch
	Flow Area (ft.^{2})	1.96		9.00		1.96
	Wetted Perimeter (ft.)	5.78		12.39		5.78
	Hydraulic Radius	0.34		0.73		0.34
	Mannings n	0.035		0.030		0.030
	Depth of Flow (max.)	0.7		1.5		0.7
	Calculations:					
	Shear Stress (lbs/ft.^{2})	0.9		1.9		0.9
	Velocity (ft./sec.)	2.6		0.6		2.6
	Allowed Flow (cfs)	5.7		51.1		6.7

ROADSIDE DITCH CALCUALTIONS

Arroya Lane - South side of roadway (Sta. 3+50 to Sta. 7+00)

		Erosion Control Blanket (ECB)		**Turf Reinforcement Mat (TRM)**		**Revegetation - Grass lined**
		(North American Green - SC150)		**(North American Green - P300)**		**(Native Seed Mix)**
	Given:	**(Permanent)**		**(Permanent)**		
	Design Flow (cfs)	2.0		2.0		2.0
	Permissible Shear (lbs/ft.^{2})	2.0		8.0		0.1
	Permissible Velocity (ft./sec.)	8.0		16.0		3.0
	Safety Factor	1		1		1
	Ditch Slope (Max.)	2.0%		2.0%		2.0%
	Ditch Section (24 in. depth)	V-Ditch		V-Ditch		V-Ditch
	Flow Area (ft.^{2})	1.96		9.00		1.96
	Wetted Perimeter (ft.)	5.78		12.39		5.78
	Hydraulic Radius	0.34		0.73		0.34
	Mannings n	0.035		0.030		0.030
	Depth of Flow (max.)	0.7		1.5		0.7
	Calculations:					
	Shear Stress (lbs/ft.^{2})	0.9		1.9		0.9
	Velocity (ft./sec.)	1.0		0.2		1.0
	Allowed Flow (cfs)	5.7		51.1		6.7

ROADSIDE DITCH CALCUALTIONS

Arroya Lane - North side of roadway (Sta. 13+75 to Sta. 17+50)

		Erosion Control Blanket (ECB)		**Turf Reinforcement Mat (TRM)**		**Revegetation - Grass lined**
		(North American Green - SC150)		**(North American Green - P300)**		**(Native Seed Mix)**
	Given:	**(Permanent) w/ rock check dams**		**(Permanent)**		
	Design Flow (cfs)	6.0		6.0		6.0
	Permissible Shear (lbs/ft.^{2})	2.0		8.0		0.1
	Permissible Velocity (ft./sec.)	8.0		16.0		3.0
	Safety Factor	1		1		1
	Ditch Slope (Max.)	5.3%		5.3%		5.3%
	Ditch Section (24 in. depth)	V-Ditch		V-Ditch		V-Ditch
	Flow Area (ft.^{2})	1.96		9.00		1.96
	Wetted Perimeter (ft.)	5.78		12.39		5.78
	Hydraulic Radius	0.34		0.73		0.34
	Mannings n	0.035		0.030		0.030
	Depth of Flow (max.)	0.7		1.5		0.7
	Calculations:					
	Shear Stress (lbs/ft.^{2})	2.3		4.9		2.3
	Velocity (ft./sec.)	3.1		0.7		3.1
	Allowed Flow (cfs)	9.3		82.8		10.8

ROADSIDE DITCH CALCUALTIONS

Arroya Lane - South side of roadway (Sta. 14+75 to Sta. 17+50)

		Erosion Control Blanket (ECB)		**Turf Reinforcement Mat (TRM)**		**Revegetation - Grass lined**
		(North American Green - SC150)		**(North American Green - P300)**		**(Native Seed Mix)**
	Given:	**(Permanent) w/ rock check dams**		**(Permanent)**		
	Design Flow (cfs)	2.0		2.0		2.0
	Permissible Shear (lbs/ft.^{2})	2.0		8.0		0.1
	Permissible Velocity (ft./sec.)	8.0		16.0		3.0
	Safety Factor	1		1		1
	Ditch Slope (Max.)	5.3%		5.3%		5.3%
	Ditch Section (24 in. depth)	V-Ditch		V-Ditch		V-Ditch
	Flow Area (ft.^{2})	1.96		9.00		1.96
	Wetted Perimeter (ft.)	5.78		12.39		5.78
	Hydraulic Radius	0.34		0.73		0.34
	Mannings n	0.035		0.030		0.030
	Depth of Flow (max.)	0.7		1.5		0.7
	Calculations:					
	Shear Stress (lbs/ft.^{2})	2.3		4.9		2.3
	Velocity (ft./sec.)	1.0		0.2		1.0
	Allowed Flow (cfs)	9.3		82.8		10.8

ROADSIDE DITCH CALCUALTIONS

Arroya Lane - North side of roadway (Sta. 17+50 to Sta. 22+50)

		Erosion Control Blanket (ECB)		**Turf Reinforcement Mat (TRM)**		**Revegetation - Grass lined**
		(North American Green - SC150)		**(North American Green - P300)**		**(Native Seed Mix)**
	Given:	**(Permanent)**		**(Permanent)**		
	Design Flow (cfs)	4.0		4.0		4.0
	Permissible Shear (lbs/ft.^{2})	2.0		8.0		0.1
	Permissible Velocity (ft./sec.)	8.0		16.0		3.0
	Safety Factor	1		1		1
	Ditch Slope (Max.)	3.8%		3.8%		3.8%
	Ditch Section (24 in. depth)	V-Ditch		V-Ditch		V-Ditch
	Flow Area (ft.^{2})	1.96		9.00		1.96
	Wetted Perimeter (ft.)	5.78		12.39		5.78
	Hydraulic Radius	0.34		0.73		0.34
	Mannings n	0.035		0.030		0.030
	Depth of Flow (max.)	0.7		1.5		0.7
	Calculations:					
	Shear Stress (lbs/ft.^{2})	1.7		3.6		1.7
	Velocity (ft./sec.)	2.0		0.4		2.0
	Allowed Flow (cfs)	7.9		70.4		9.2

ROADSIDE DITCH CALCUALTIONS

Arroya Lane - South side of roadway (Sta. 17+50 to Sta. 22+50)

		Erosion Control Blanket (ECB)		**Turf Reinforcement Mat (TRM)**		**Revegetation - Grass lined**
		(North American Green - SC150)		**(North American Green - P300)**		**(Native Seed Mix)**
	Given:	**(Permanent)**		**(Permanent)**		
	Design Flow (cfs)	1.0		1.0		1.0
	Permissible Shear (lbs/ft.^{2})	2.0		8.0		0.1
	Permissible Velocity (ft./sec.)	8.0		16.0		3.0
	Safety Factor	1		1		1
	Ditch Slope (Max.)	3.8%		3.8%		3.8%
	Ditch Section (24 in. depth)	V-Ditch		V-Ditch		V-Ditch
	Flow Area (ft.^{2})	1.96		9.00		1.96
	Wetted Perimeter (ft.)	5.78		12.39		5.78
	Hydraulic Radius	0.34		0.73		0.34
	Mannings n	0.035		0.030		0.030
	Depth of Flow (max.)	0.7		1.5		0.7
	Calculations:					
	Shear Stress (lbs/ft.^{2})	1.7		3.6		1.7
	Velocity (ft./sec.)	0.5		0.1		0.5
	Allowed Flow (cfs)	7.9		70.4		9.2

ROADSIDE DITCH CALCUALTIONS

Aspen Valley Rd. - West side of roadway (Sta. 25+67 to Sta. 29+00)

		Erosion Control Blanket (ECB)		**Turf Reinforcement Mat (TRM)**		**Revegetation - Grass lined**
		(North American Green - SC150)		**(North American Green - P300)**		**(Native Seed Mix)**
	Given:	**(Permanent)**		**(Permanent)**		
	Design Flow (cfs)	8.0		8.0		8.0
	Permissible Shear (lbs/ft.^{2})	2.0		8.0		0.1
	Permissible Velocity (ft./sec.)	8.0		16.0		3.0
	Safety Factor	1		1		1
	Ditch Slope (Max.)	2.5%		2.5%		2.5%
	Ditch Section (24 in. depth)	V-Ditch		V-Ditch		V-Ditch
	Flow Area (ft.^{2})	1.96		9.00		1.96
	Wetted Perimeter (ft.)	5.78		12.39		5.78
	Hydraulic Radius	0.34		0.73		0.34
	Mannings n	0.035		0.030		0.030
	Depth of Flow (max.)	0.7		1.5		0.7
	Calculations:					
	Shear Stress (lbs/ft.^{2})	1.1		2.3		1.1
	Velocity (ft./sec.)	4.1		0.9		4.1
	Allowed Flow (cfs)	6.4		57.1		7.5

ROADSIDE DITCH CALCUALTIONS

Aspen Valley Rd. - East side of roadway (Sta. 25+67 to Sta. 29+00)

		Erosion Control Blanket (ECB)		**Turf Reinforcement Mat (TRM)**		**Revegetation - Grass lined**
		(North American Green - SC150)		**(North American Green - P300)**		**(Native Seed Mix)**
	Given:	**(Permanent)**		**(Permanent)**		
	Design Flow (cfs)	1.0		1.0		1.0
	Permissible Shear (lbs/ft.^{2})	2.0		8.0		0.1
	Permissible Velocity (ft./sec.)	8.0		16.0		3.0
	Safety Factor	1		1		1
	Ditch Slope (Max.)	2.5%		2.5%		2.5%
	Ditch Section (24 in. depth)	V-Ditch		V-Ditch		V-Ditch
	Flow Area (ft.^{2})	1.96		9.00		1.96
	Wetted Perimeter (ft.)	5.78		12.39		5.78
	Hydraulic Radius	0.34		0.73		0.34
	Mannings n	0.035		0.030		0.030
	Depth of Flow (max.)	0.7		1.5		0.7
	Calculations:					
	Shear Stress (lbs/ft.^{2})	1.1		2.3		1.1
	Velocity (ft./sec.)	0.5		0.1		0.5
	Allowed Flow (cfs)	6.4		57.1		7.5

ROADSIDE DITCH CALCUALTIONS

Hawks Hill Ct. - Northeast side of roadway (Sta. 1+25 to Sta. 8+50)

		Erosion Control Blanket (ECB)		**Turf Reinforcement Mat (TRM)**		**Revegetation - Grass lined**
		(North American Green - SC150)		**(North American Green - P300)**		**(Native Seed Mix)**
	Given:	**(Permanent)**		**(Permanent)**		
	Design Flow (cfs)	15.0		15.0		15.0
	Permissible Shear (lbs/ft.^{2})	2.0		8.0		0.1
	Permissible Velocity (ft./sec.)	8.0		16.0		3.0
	Safety Factor	1		1		1
	Ditch Slope (Max.)	1.2%		1.2%		1.2%
	Ditch Section (24 in. depth)	V-Ditch		V-Ditch		V-Ditch
	Flow Area (ft.^{2})	9.00		9.00		9.00
	Wetted Perimeter (ft.)	12.39		12.39		12.39
	Hydraulic Radius	0.73		0.73		0.73
	Mannings n	0.035		0.030		0.030
	Depth of Flow (max.)	1.5		1.5		1.5
	Calculations:					
	Shear Stress (lbs/ft.^{2})	1.1		1.1		1.1
	Velocity (ft./sec.)	1.7		1.7		1.7
	Allowed Flow (cfs)	33.9		39.6		39.6

ROADSIDE DITCH CALCUALTIONS

Hawks Hill Ct. - Southwest side of roadway (Sta. 1+25 to Sta. 9+50)

		Erosion Control Blanket (ECB)		**Turf Reinforcement Mat (TRM)**		**Revegetation - Grass lined**
		(North American Green - SC150)		**(North American Green - P300)**		**(Native Seed Mix)**
	Given:	**(Permanent)**		**(Permanent)**		
	Design Flow (cfs)	2.0		2.0		2.0
	Permissible Shear (lbs/ft.^{2})	2.0		8.0		0.1
	Permissible Velocity (ft./sec.)	8.0		16.0		3.0
	Safety Factor	1		1		1
	Ditch Slope (Max.)	1.2%		1.2%		1.2%
	Ditch Section (24 in. depth)	V-Ditch		V-Ditch		V-Ditch
	Flow Area (ft.^{2})	1.96		1.96		1.96
	Wetted Perimeter (ft.)	5.78		5.78		5.78
	Hydraulic Radius	0.34		0.34		0.34
	Mannings n	0.035		0.030		0.030
	Depth of Flow (max.)	0.7		0.7		0.7
	Calculations:					
	Shear Stress (lbs/ft.^{2})	0.5		0.5		0.5
	Velocity (ft./sec.)	1.0		1.0		1.0
	Allowed Flow (cfs)	4.4		5.2		5.2

ROADSIDE DITCH CALCUALTIONS

Hawks Hill Ct. - North side of roadway (Sta. 8+50 to HP in Cul-de-sac)

		Erosion Control Blanket (ECB)		**Turf Reinforcement Mat (TRM)**		**Revegetation - Grass lined**
		(North American Green - SC150)		**(North American Green - P300)**		**(Native Seed Mix)**
	Given:	**(Permanent)**		**(Permanent)**		
	Design Flow (cfs)	6.0		6.0		6.0
	Permissible Shear (lbs/ft.^{2})	2.0		8.0		0.1
	Permissible Velocity (ft./sec.)	8.0		16.0		3.0
	Safety Factor	1		1		1
	Ditch Slope (Max.)	3.5%		3.5%		3.5%
	Ditch Section (24 in. depth)	V-Ditch		V-Ditch		V-Ditch
	Flow Area (ft.^{2})	1.96		1.96		1.96
	Wetted Perimeter (ft.)	5.78		5.78		5.78
	Hydraulic Radius	0.34		0.34		0.34
	Mannings n	0.035		0.030		0.030
	Depth of Flow (max.)	0.7		0.7		0.7
	Calculations:					
	Shear Stress (lbs/ft.^{2})	1.5		1.5		1.5
	Velocity (ft./sec.)	3.1		3.1		3.1
	Allowed Flow (cfs)	7.6		8.9		8.9

ROADSIDE DITCH CALCUALTIONS

Hawks Hill Ct. - South side of roadway (Sta. 10+10 to HP in Cul-de-sac)

		Erosion Control Blanket (ECB)		**Turf Reinforcement Mat (TRM)**		**Revegetation - Grass lined**
		(North American Green - SC150)		**(North American Green - P300)**		**(Native Seed Mix)**
	Given:	**(Permanent)**		**(Permanent)**		
	Design Flow (cfs)	2.0		2.0		2.0
	Permissible Shear (lbs/ft.^{2})	2.0		8.0		0.1
	Permissible Velocity (ft./sec.)	8.0		16.0		3.0
	Safety Factor	1		1		1
	Ditch Slope (Max.)	3.5%		3.5%		3.5%
	Ditch Section (24 in. depth)	V-Ditch		V-Ditch		V-Ditch
	Flow Area (ft.^{2})	1.96		1.96		1.96
	Wetted Perimeter (ft.)	5.78		5.78		5.78
	Hydraulic Radius	0.34		0.34		0.34
	Mannings n	0.035		0.030		0.030
	Depth of Flow (max.)	0.7		0.7		0.7
	Calculations:					
	Shear Stress (lbs/ft.^{2})	1.5		1.5		1.5
	Velocity (ft./sec.)	1.0		1.0		1.0
	Allowed Flow (cfs)	7.6		8.9		8.9

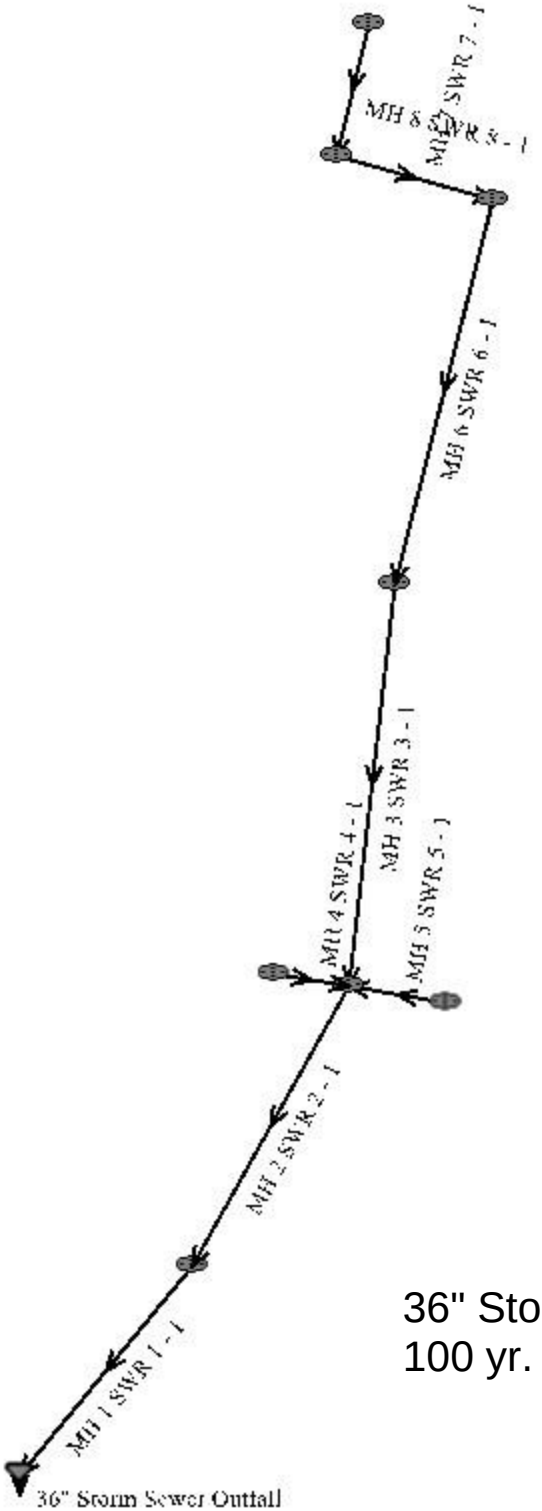

36" Storm Outfall
100 yr. HGL

36” Storm Sewer Outfall - 100yr HGL

System Input Summary

Rainfall Parameters

Rainfall Return Period: 100
Rainfall Calculation Method: Table

Time	Intensity
5	8.68
10	6.93
20	5.19
30	4.16
40	3.44
60	2.42
120	0.67

Rational Method Constraints

Minimum Urban Runoff Coeff.: 0.20
Maximum Rural Overland Len. (ft): 500
Maximum Urban Overland Len. (ft): 300
Used UDFCD Tc. Maximum: Yes

Sizer Constraints

Minimum Sewer Size (in): 18.00
Maximum Depth to Rise Ratio: 0.90
Maximum Flow Velocity (fps): 18.0
Minimum Flow Velocity (fps): 2.0

Backwater Calculations:

Tailwater Elevation (ft): 7206.90

Manhole Input Summary:

		Given Flow		Sub Basin Information						
Element Name	**Ground Elevation (ft)**	**Total Known Flow (cfs)**	**Local Contribution (cfs)**	**Drainage Area (Ac.)**	**Runoff Coefficient**	**5yr Coefficient**	**Overland Length (ft)**	**Overland Slope (%)**	**Gutter Length (ft)**	**Gutter Velocity (fps)**
36" Storm Sewer Outfall	7211.20	0.00	0.00	0.00	0.00	0.00	0.00	0.00	0.00	0.00
MH 1 SWR 1 - 1	7223.66	55.00	0.00	0.00	0.00	0.00	0.00	0.00	0.00	0.00
MH 2 SWR 2 - 1	7226.71	55.00	0.00	0.00	0.00	0.00	0.00	0.00	0.00	0.00
MH 3 SWR 3 - 1	7234.90	30.00	0.00	0.00	0.00	0.00	0.00	0.00	0.00	0.00
MH 6 SWR 6 - 1	7251.18	30.00	0.00	0.00	0.00	0.00	0.00	0.00	0.00	0.00
MH 7 SWR 7 - 1	7251.18	30.00	0.00	0.00	0.00	0.00	0.00	0.00	0.00	0.00
MH 8 SWR 8 - 1	7246.50	30.00	0.00	0.00	0.00	0.00	0.00	0.00	0.00	0.00
MH 4 SWR 4 - 1	7227.02	4.00	0.00	0.00	0.00	0.00	0.00	0.00	0.00	0.00
MH 5 SWR 5 - 1	7227.02	22.00	0.00	0.00	0.00	0.00	0.00	0.00	0.00	0.00

Manhole Output Summary:

	Local Contribution					Total Design Flow				
Element Name	Overland Time (min)	Gutter Time (min)	Basin Tc (min)	Intensity (in/hr)	Local Contrib (cfs)	Coeff. Area	Intensity (in/hr)	Manhole Tc (min)	Peak Flow (cfs)	Comment
36" Storm Sewer Outfall	0.00	0.00	0.00	0.00	0.00	58.61	0.94	0.54	55.00	
MH 1 SWR 1 - 1	0.00	0.00	0.00	0.00	0.00	0.00	0.00	0.00	55.00	
MH 2 SWR 2 - 1	0.00	0.00	0.00	0.00	0.00	0.00	0.00	0.00	55.00	
MH 3 SWR 3 - 1	0.00	0.00	0.00	0.00	0.00	0.00	0.00	0.00	30.00	
MH 6 SWR 6 - 1	0.00	0.00	0.00	0.00	0.00	0.00	0.00	0.00	30.00	
MH 7 SWR 7 - 1	0.00	0.00	0.00	0.00	0.00	0.00	0.00	0.00	30.00	
MH 8 SWR 8 - 1	0.00	0.00	0.00	0.00	0.00	0.00	0.00	0.00	30.00	
MH 4 SWR 4 - 1	0.00	0.00	0.00	0.00	0.00	0.00	0.00	0.00	4.00	
MH 5 SWR 5 - 1	0.00	0.00	0.00	0.00	0.00	0.00	0.00	0.00	22.00	

Sewer Input Summary:

		Elevation			Loss Coefficients			Given Dimensions		
Element Name	Sewer Length (ft)	Downstream Invert (ft)	Slope (%)	Upstream Invert (ft)	Mannings n	Bend Loss	Lateral Loss	Cross Section	Rise (ft or in)	Span (ft or in)
MH 1 SWR 1 - 1	252.38	7205.10	4.0	7215.20	0.013	0.03	1.00	CIRCULAR	36.00 in	36.00 in
MH 2 SWR 2 - 1	283.77	7215.70	1.9	7221.01	0.013	0.05	1.00	CIRCULAR	36.00 in	36.00 in

MH 3 SWR 3 - 1	426.88	7221.46	1.7	7228.72	0.013	0.05	1.00	CIRCULAR	30.00 in	30.00 in
MH 6 SWR 6 - 1	352.96	7229.18	3.2	7240.47	0.013	0.05	1.00	CIRCULAR	30.00 in	30.00 in
MH 7 SWR 7 - 1	88.50	7240.95	1.3	7242.10	0.013	1.32	1.00	CIRCULAR	30.00 in	30.00 in
MH 8 SWR 8 - 1	40.03	7242.60	1.0	7243.00	0.013	1.32	1.00	CIRCULAR	30.00 in	30.00 in
MH 4 SWR 4 - 1	5.17	7222.51	5.8	7222.81	0.013	1.32	0.00	CIRCULAR	18.00 in	18.00 in
MH 5 SWR 5 - 1	25.17	7222.01	3.5	7222.88	0.013	1.32	0.00	CIRCULAR	24.00 in	24.00 in

Sewer Flow Summary:

	Full Flow Capacity		Critical Flow		Normal Flow						
Element Name	**Flow (cfs)**	**Velocity (fps)**	**Depth (in)**	**Velocity (fps)**	**Depth (in)**	**Velocity (fps)**	**Froude Number**	**Flow Condition**	**Flow (cfs)**	**Surcharged Length (ft)**	**Comment**
MH 1 SWR 1 - 1	133.76	18.92	28.88	9.05	16.08	18.00	3.13	Supercritical	55.00	0.00	
MH 2 SWR 2 - 1	91.48	12.94	28.88	9.05	20.12	13.53	2.04	Supercritical	55.00	0.00	
MH 3 SWR 3 - 1	53.62	10.92	22.40	7.63	16.04	11.23	1.91	Supercritical Jump	30.00	45.74	
MH 6 SWR 6 - 1	73.57	14.99	22.40	7.63	13.34	14.22	2.72	Supercritical	30.00	0.00	
MH 7 SWR 7 - 1	46.89	9.55	22.40	7.63	17.44	10.13	1.63	Supercritical	30.00	0.00	
MH 8 SWR 8 - 1	41.13	8.38	22.40	7.63	19.02	9.14	1.38	Supercritical	30.00	0.00	
MH 4 SWR 4 - 1	25.37	14.35	9.18	4.41	4.83	10.47	3.44	Pressurized	4.00	5.17	
MH 5 SWR 5 - 1	42.17	13.42	20.10	7.83	12.30	13.57	2.65	Pressurized	22.00	25.17	

- A Froude number of 0 indicates that pressured flow occurs (adverse slope or undersized pipe).
- If the sewer is not pressurized, full flow represents the maximum gravity flow in the sewer.
- If the sewer is pressurized, full flow represents the pressurized flow conditions.

Sewer Sizing Summary:

			Existing		Calculated		Used			
Element Name	Peak Flow (cfs)	Cross Section	Rise	Span	Rise	Span	Rise	Span	Area (ft^2)	Comment
MH 1 SWR 1 - 1	55.00	CIRCULAR	36.00 in	36.00 in	27.00 in	27.00 in	36.00 in	36.00 in	7.07	
MH 2 SWR 2 - 1	55.00	CIRCULAR	36.00 in	36.00 in	30.00 in	30.00 in	36.00 in	36.00 in	7.07	
MH 3 SWR 3 - 1	30.00	CIRCULAR	30.00 in	30.00 in	27.00 in	27.00 in	30.00 in	30.00 in	4.91	
MH 6 SWR 6 - 1	30.00	CIRCULAR	30.00 in	30.00 in	24.00 in	24.00 in	30.00 in	30.00 in	4.91	
MH 7 SWR 7 - 1	30.00	CIRCULAR	30.00 in	30.00 in	27.00 in	27.00 in	30.00 in	30.00 in	4.91	
MH 8 SWR 8 - 1	30.00	CIRCULAR	30.00 in	30.00 in	27.00 in	27.00 in	30.00 in	30.00 in	4.91	
MH 4 SWR 4 - 1	4.00	CIRCULAR	18.00 in	18.00 in	18.00 in	18.00 in	18.00 in	18.00 in	1.77	
MH 5 SWR 5 - 1	22.00	CIRCULAR	24.00 in	24.00 in	21.00 in	21.00 in	24.00 in	24.00 in	3.14	

- Calculated diameter was determined by sewer hydraulic capacity rounded up to the nearest commercially available size.
- Sewer sizes should not decrease downstream.
- All hydraulics where calculated using the 'Used' parameters.

Grade Line Summary:

Tailwater Elevation (ft): 7206.90

	Invert Elev.		Downstream Manhole Losses		HGL		EGL		
Element Name	**Downstream (ft)**	**Upstream (ft)**	**Bend Loss (ft)**	**Lateral Loss (ft)**	**Downstream (ft)**	**Upstream (ft)**	**Downstream (ft)**	**Friction Loss (ft)**	**Upstream (ft)**
MH 1 SWR 1 - 1	7205.10	7215.20	0.00	0.00	7206.90	7217.60	7211.47	7.40	7218.87
MH 2 SWR 2 - 1	7215.70	7221.01	0.05	0.00	7217.65	7223.42	7220.22	4.47	7224.69
MH 3 SWR 3 - 1	7221.46	7228.72	0.03	0.36	7224.50	7230.59	7225.08	6.41	7231.49
MH 6 SWR 6 - 1	7229.18	7240.47	0.03	0.00	7230.62	7242.34	7233.43	9.81	7243.24
MH 7 SWR 7 - 1	7240.95	7242.10	0.77	0.00	7243.42	7243.97	7244.01	0.86	7244.87
MH 8 SWR 8 - 1	7242.60	7243.00	0.77	0.00	7245.05	7245.05	7245.64	0.17	7245.80
MH 4 SWR 4 - 1	7222.51	7222.81	0.11	0.00	7224.71	7224.72	7224.79	0.01	7224.80
MH 5 SWR 5 - 1	7222.01	7222.88	1.01	0.00	7224.93	7225.17	7225.69	0.24	7225.93

- Bend and Lateral losses only apply when there is an outgoing sewer. The system outfall, sewer #0, is not considered a sewer.
- Bend loss = Bend K * V_fi ^ 2/(2*g)
- Lateral loss = V_fo ^ 2/(2*g)- Junction Loss K * V_fi ^ 2/(2*g).
- Friction loss is always Upstream EGL - Downstream EGL.

FUTURE 30" STORM OUTFALL 100-YR. HGL
MAP LAYOUT

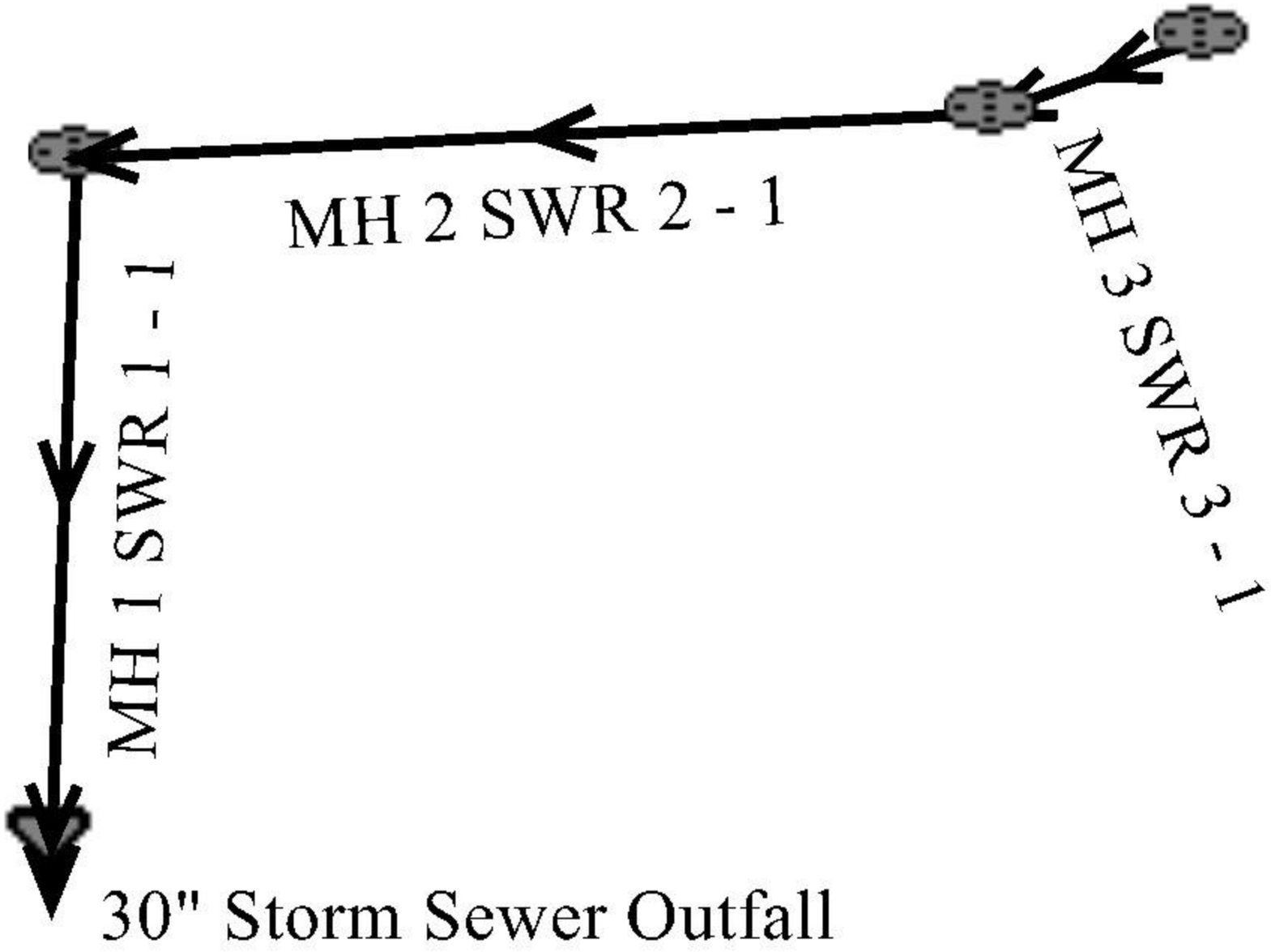

Future 30” Storm Sewer Outfall - 100yr HGL

System Input Summary

Rainfall Parameters

Rainfall Return Period: 100
Rainfall Calculation Method: Table

Time	Intensity
5	8.68
10	6.93
20	5.19
30	4.16
40	3.44
60	2.42
120	0.67

Rational Method Constraints

Minimum Urban Runoff Coeff.: 0.20
Maximum Rural Overland Len. (ft): 500
Maximum Urban Overland Len. (ft): 300
Used UDFCD Tc. Maximum: Yes

Sizer Constraints

Minimum Sewer Size (in): 18.00
Maximum Depth to Rise Ratio: 0.90
Maximum Flow Velocity (fps): 18.0
Minimum Flow Velocity (fps): 2.0

Backwater Calculations:

Tailwater Elevation (ft): 7234.00

Manhole Input Summary:

		Given Flow		Sub Basin Information						
Element Name	**Ground Elevation (ft)**	**Total Known Flow (cfs)**	**Local Contribution (cfs)**	**Drainage Area (Ac.)**	**Runoff Coefficient**	**5yr Coefficient**	**Overland Length (ft)**	**Overland Slope (%)**	**Gutter Length (ft)**	**Gutter Velocity (fps)**
30" Storm Sewer Outfall	7211.20	0.00	0.00	0.00	0.00	0.00	0.00	0.00	0.00	0.00
MH 1 SWR 1 - 1	7240.05	47.80	0.00	0.00	0.00	0.00	0.00	0.00	0.00	0.00
MH 2 SWR 2 - 1	7246.00	47.80	0.00	0.00	0.00	0.00	0.00	0.00	0.00	0.00
MH 3 SWR 3 - 1	7241.00	47.80	0.00	0.00	0.00	0.00	0.00	0.00	0.00	0.00

Manhole Output Summary:

	Local Contribution					Total Design Flow				
Element Name	Overland Time (min)	Gutter Time (min)	Basin Tc (min)	Intensity (in/hr)	Local Contrib (cfs)	Coeff. Area	Intensity (in/hr)	Manhole Tc (min)	Peak Flow (cfs)	Comment
30" Storm Sewer Outfall	0.00	0.00	0.00	0.00	0.00	185.66	0.26	0.15	47.80	Surface Water Present (Upstream)
MH 1 SWR 1 - 1	0.00	0.00	0.00	0.00	0.00	0.00	0.00	0.00	47.80	Surface Water Present (Downstream)
MH 2 SWR 2 - 1	0.00	0.00	0.00	0.00	0.00	0.00	0.00	0.00	47.80	
MH 3 SWR 3 - 1	0.00	0.00	0.00	0.00	0.00	0.00	0.00	0.00	47.80	Surface Water Present (Upstream)

Sewer Input Summary:

		Elevation			Loss Coefficients			Given Dimensions		
Element Name	Sewer Length (ft)	Downstream Invert (ft)	Slope (%)	Upstream Invert (ft)	Mannings n	Bend Loss	Lateral Loss	Cross Section	Rise (ft or in)	Span (ft or in)
MH 1 SWR 1 - 1	86.65	7230.48	2.8	7232.88	0.013	0.03	1.00	CIRCULAR	30.00 in	30.00 in
MH 2 SWR 2 - 1	196.07	7233.38	2.7	7238.67	0.013	1.32	1.00	CIRCULAR	30.00 in	30.00 in
MH 3 SWR 3 - 1	20.00	7239.67	4.0	7240.47	0.013	0.20	1.00	CIRCULAR	30.00 in	30.00 in

Sewer Flow Summary:

	Full Flow Capacity		Critical Flow		Normal Flow						
Element Name	**Flow (cfs)**	**Velocity (fps)**	**Depth (in)**	**Velocity (fps)**	**Depth (in)**	**Velocity (fps)**	**Froude Number**	**Flow Condition**	**Flow (cfs)**	**Surcharged Length (ft)**	**Comment**
MH 1 SWR 1 - 1	68.45	13.94	27.23	10.21	18.47	15.08	2.33	Supercritical Jump	47.80	71.89	
MH 2 SWR 2 - 1	67.55	13.76	27.23	10.21	18.63	14.92	2.29	Supercritical Jump	47.80	100.89	
MH 3 SWR 3 - 1	82.27	16.76	27.23	10.21	16.42	17.39	2.91	Supercritical	47.80	0.00	

- A Froude number of 0 indicates that pressured flow occurs (adverse slope or undersized pipe).
- If the sewer is not pressurized, full flow represents the maximum gravity flow in the sewer.
- If the sewer is pressurized, full flow represents the pressurized flow conditions.

Sewer Sizing Summary:

			Existing		Calculated		Used			
Element Name	**Peak Flow (cfs)**	**Cross Section**	**Rise**	**Span**	**Rise**	**Span**	**Rise**	**Span**	**Area (ft^2)**	**Comment**
MH 1 SWR 1 - 1	47.80	CIRCULAR	30.00 in	30.00 in	27.00 in	27.00 in	30.00 in	30.00 in	4.91	
MH 2 SWR 2 - 1	47.80	CIRCULAR	30.00 in	30.00 in	27.00 in	27.00 in	30.00 in	30.00 in	4.91	
MH 3 SWR 3 - 1	47.80	CIRCULAR	30.00 in	30.00 in	27.00 in	27.00 in	30.00 in	30.00 in	4.91	

- Calculated diameter was determined by sewer hydraulic capacity rounded up to the nearest commercially available size.
- Sewer sizes should not decrease downstream.
- All hydraulics where calculated using the 'Used' parameters.

Grade Line Summary:

Tailwater Elevation (ft): 7234.00

	Invert Elev.		Downstream Manhole Losses		HGL		EGL		
Element Name	**Downstream (ft)**	**Upstream (ft)**	**Bend Loss (ft)**	**Lateral Loss (ft)**	**Downstream (ft)**	**Upstream (ft)**	**Downstream (ft)**	**Friction Loss (ft)**	**Upstream (ft)**
MH 1 SWR 1 - 1	7230.48	7232.88	0.00	0.00	7234.00	7235.15	7235.47	1.30	7236.77
MH 2 SWR 2 - 1	7233.38	7238.67	1.94	0.00	7237.24	7240.94	7238.71	3.85	7242.56
MH 3 SWR 3 - 1	7239.67	7240.47	0.29	0.00	7241.23	7244.26	7245.73	0.00	7245.73

- Bend and Lateral losses only apply when there is an outgoing sewer. The system outfall, sewer #0, is not considered a sewer.
- Bend loss = Bend K * V_fi ^ 2/(2*g)
- Lateral loss = V_fo ^ 2/(2*g)- Junction Loss K * V_fi ^ 2/(2*g).
- Friction loss is always Upstream EGL - Downstream EGL.

Rain Garden 1 Storm System 100-yr. HGL

System Input Summary

Rainfall Parameters

Rainfall Return Period: 100
Rainfall Calculation Method: Table

Time	Intensity
5	8.68
10	6.93
20	5.19
30	4.16
40	3.44
60	2.42
120	0.67

Rational Method Constraints

Minimum Urban Runoff Coeff.: 0.20
Maximum Rural Overland Len. (ft): 500
Maximum Urban Overland Len. (ft): 300
Used UDFCD Tc. Maximum: Yes

Sizer Constraints

24" STORM OUTFALL TO RAIN GARDEN 100-YR. HGL
MAP LAYOUT

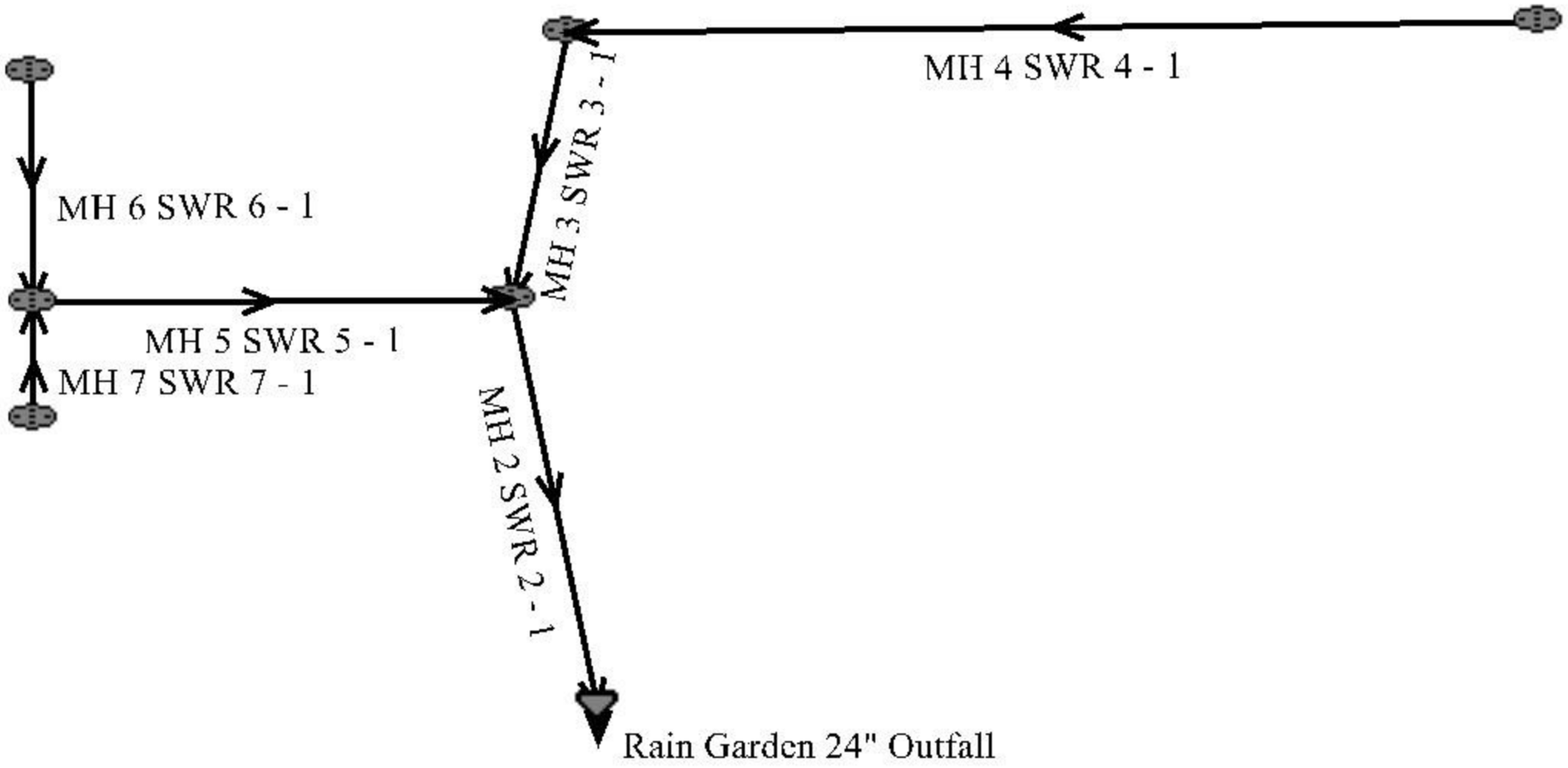

Rain Garden 1 Storm System 100-yr. HGL

System Input Summary

Rainfall Parameters

Rainfall Return Period: 100
Rainfall Calculation Method: Table

Time	Intensity
5	8.68
10	6.93
20	5.19
30	4.16
40	3.44
60	2.42
120	0.67

Rational Method Constraints

Minimum Urban Runoff Coeff.: 0.20
Maximum Rural Overland Len. (ft): 500
Maximum Urban Overland Len. (ft): 300
Used UDFCD Tc. Maximum: Yes

Sizer Constraints

Minimum Sewer Size (in): 18.00
Maximum Depth to Rise Ratio: 0.90
Maximum Flow Velocity (fps): 18.0
Minimum Flow Velocity (fps): 2.0

Backwater Calculations:

Tailwater Elevation (ft): 7235.50

Manhole Input Summary:

		Given Flow		Sub Basin Information						
Element Name	**Ground Elevation (ft)**	**Total Known Flow (cfs)**	**Local Contribution (cfs)**	**Drainage Area (Ac.)**	**Runoff Coefficient**	**5yr Coefficient**	**Overland Length (ft)**	**Overland Slope (%)**	**Gutter Length (ft)**	**Gutter Velocity (fps)**
Rain Garden 24" Outfall	7018.70	0.00	0.00	0.00	0.00	0.00	0.00	0.00	0.00	0.00
MH 2 SWR 2 - 1	7239.83	10.00	0.00	0.00	0.00	0.00	0.00	0.00	0.00	0.00
MH 3 SWR 3 - 1	7241.16	6.00	0.00	0.00	0.00	0.00	0.00	0.00	0.00	0.00
MH 4 SWR 4 - 1	7253.50	6.00	0.00	0.00	0.00	0.00	0.00	0.00	0.00	0.00
MH 5 SWR 5 - 1	7248.50	6.00	0.00	0.00	0.00	0.00	0.00	0.00	0.00	0.00
MH 6 SWR 6 - 1	7239.34	3.00	0.00	0.00	0.00	0.00	0.00	0.00	0.00	0.00
MH 7 SWR 7 - 1	7239.34	3.00	0.00	0.00	0.00	0.00	0.00	0.00	0.00	0.00

Manhole Output Summary:

	Local Contribution					Total Design Flow				
Element Name	Overland Time (min)	Gutter Time (min)	Basin Tc (min)	Intensity (in/hr)	Local Contrib (cfs)	Coeff. Area	Intensity (in/hr)	Manhole Tc (min)	Peak Flow (cfs)	Comment
Rain Garden 24" Outfall	0.00	0.00	0.00	0.00	0.00	14.01	0.71	0.41	10.00	Surface Water Present (Upstream)
MH 2 SWR 2 - 1	0.00	0.00	0.00	0.00	0.00	0.00	0.00	0.00	10.00	Surface Water Present (Downstream)
MH 3 SWR 3 - 1	0.00	0.00	0.00	0.00	0.00	0.00	0.00	0.00	6.00	
MH 4 SWR 4 - 1	0.00	0.00	0.00	0.00	0.00	0.00	0.00	0.00	6.00	
MH 5 SWR 5 - 1	0.00	0.00	0.00	0.00	0.00	0.00	0.00	0.00	6.00	
MH 6 SWR 6 - 1	0.00	0.00	0.00	0.00	0.00	0.00	0.00	0.00	3.00	
MH 7 SWR 7 - 1	0.00	0.00	0.00	0.00	0.00	0.00	0.00	0.00	3.00	

Sewer Input Summary:

		Elevation			Loss Coefficients			Given Dimensions		
Element Name	Sewer Length (ft)	Downstream Invert (ft)	Slope (%)	Upstream Invert (ft)	Mannings n	Bend Loss	Lateral Loss	Cross Section	Rise (ft or in)	Span (ft or in)
MH 2 SWR 2 - 1	78.52	7232.54	1.0	7233.33	0.013	0.05	1.00	CIRCULAR	24.00 in	24.00 in
MH 3 SWR 3 - 1	33.50	7234.33	1.0	7234.67	0.013	0.05	1.00	CIRCULAR	18.00 in	18.00 in
MH 4 SWR 4 - 1	209.88	7235.16	6.3	7248.44	0.013	1.06	1.00	CIRCULAR	18.00 in	18.00 in
MH 5 SWR 5 - 1	56.01	7233.83	1.0	7234.39	0.013	1.19	0.00	CIRCULAR	24.00 in	24.00 in

MH 6 SWR 6 - 1	24.67	7234.89	1.0	7235.14	0.013	1.32	0.00	CIRCULAR	18.00 in	18.00 in
MH 7 SWR 7 - 1	8.67	7234.89	2.9	7235.14	0.013	1.32	0.00	CIRCULAR	18.00 in	18.00 in

---

Sewer Flow Summary:

	Full Flow Capacity		Critical Flow		Normal Flow						
Element Name	**Flow (cfs)**	**Velocity (fps)**	**Depth (in)**	**Velocity (fps)**	**Depth (in)**	**Velocity (fps)**	**Froude Number**	**Flow Condition**	**Flow (cfs)**	**Surcharged Length (ft)**	**Comment**
MH 2 SWR 2 - 1	22.68	7.22	13.58	5.46	11.15	6.99	1.46	Pressurized	10.00	78.52	
MH 3 SWR 3 - 1	10.53	5.96	11.35	5.11	9.73	6.15	1.34	Supercritical	6.00	0.00	
MH 4 SWR 4 - 1	26.49	14.99	11.35	5.11	5.82	12.12	3.60	Supercritical	6.00	0.00	
MH 5 SWR 5 - 1	22.68	7.22	10.39	4.60	8.43	6.10	1.50	Supercritical	6.00	0.00	
MH 6 SWR 6 - 1	10.53	5.96	7.90	4.02	6.57	5.14	1.42	Supercritical	3.00	0.00	
MH 7 SWR 7 - 1	17.89	10.12	7.90	4.02	4.99	7.52	2.43	Supercritical	3.00	0.00	

- A Froude number of 0 indicates that pressured flow occurs (adverse slope or undersized pipe).
- If the sewer is not pressurized, full flow represents the maximum gravity flow in the sewer.
- If the sewer is pressurized, full flow represents the pressurized flow conditions.

Sewer Sizing Summary:

			Existing		Calculated		Used			
Element Name	Peak Flow (cfs)	Cross Section	Rise	Span	Rise	Span	Rise	Span	Area (ft^2)	Comment
MH 2 SWR 2 - 1	10.00	CIRCULAR	24.00 in	24.00 in	18.00 in	18.00 in	24.00 in	24.00 in	3.14	
MH 3 SWR 3 - 1	6.00	CIRCULAR	18.00 in	18.00 in	18.00 in	18.00 in	18.00 in	18.00 in	1.77	
MH 4 SWR 4 - 1	6.00	CIRCULAR	18.00 in	18.00 in	18.00 in	18.00 in	18.00 in	18.00 in	1.77	
MH 5 SWR 5 - 1	6.00	CIRCULAR	24.00 in	24.00 in	18.00 in	18.00 in	24.00 in	24.00 in	3.14	
MH 6 SWR 6 - 1	3.00	CIRCULAR	18.00 in	18.00 in	18.00 in	18.00 in	18.00 in	18.00 in	1.77	
MH 7 SWR 7 - 1	3.00	CIRCULAR	18.00 in	18.00 in	18.00 in	18.00 in	18.00 in	18.00 in	1.77	

- Calculated diameter was determined by sewer hydraulic capacity rounded up to the nearest commercially available size.
- Sewer sizes should not decrease downstream.
- All hydraulics where calculated using the 'Used' parameters.

Grade Line Summary:

Tailwater Elevation (ft): 7235.50

	Invert Elev.		Downstream Manhole Losses		HGL		EGL		
Element Name	**Downstream (ft)**	**Upstream (ft)**	**Bend Loss (ft)**	**Lateral Loss (ft)**	**Downstream (ft)**	**Upstream (ft)**	**Downstream (ft)**	**Friction Loss (ft)**	**Upstream (ft)**
MH 2 SWR 2 - 1	7232.54	7233.33	0.00	0.00	7235.50	7235.65	7235.66	0.15	7235.81
MH 3 SWR 3 - 1	7234.33	7234.67	0.01	0.00	7235.66	7235.66	7235.86	0.16	7236.02
MH 4 SWR 4 - 1	7235.16	7248.44	0.19	0.00	7235.85	7249.39	7237.93	11.86	7249.79
MH 5 SWR 5 - 1	7233.83	7234.39	0.07	0.00	7235.82	7235.82	7235.88	0.04	7235.92
MH 6 SWR 6 - 1	7234.89	7235.14	0.06	0.00	7235.89	7235.89	7235.98	0.09	7236.07
MH 7 SWR 7 - 1	7234.89	7235.14	0.06	0.00	7235.88	7236.08	7236.18	0.00	7236.18

- Bend and Lateral losses only apply when there is an outgoing sewer. The system outfall, sewer #0, is not considered a sewer.
- Bend loss = Bend K * V_fi ^ 2/(2*g)
- Lateral loss = V_fo ^ 2/(2*g)- Junction Loss K * V_fi ^ 2/(2*g).
- Friction loss is always Upstream EGL - Downstream EGL.

STORMWATER QUALITY CALCULATIONS

CLASSIC
CONSULTING
ENGINEERS & SURVEYORS

Design Procedure Form: Rain Garden (RG)

UD-BMP (Version 3.07, March 2018)

Designer: Marc A. Whorton, P.E.
Company: Classic Consulting
Date: September 20, 2023
Project: Retreat at TimberRidge Filing No. 3
Location: Arroya Lane (Rain Garden 1)

1. Basin Storage Volume	
A) Effective Imperviousness of Tributary Area, I_a (100% if all paved and roofed areas upstream of rain garden)	I_a = 22.4 %
B) Tributary Area's Imperviousness Ratio ($i = I_a/100$)	i = 0.224
C) Water Quality Capture Volume (WQCV) for a 12-hour Drain Time ($WQCV = 0.8 * (0.91* i^3 - 1.19 * i^2 + 0.78 * i)$)	WQCV = 0.10 watershed inches
D) Contributing Watershed Area (including rain garden area)	Area = 217,800 sq ft
E) Water Quality Capture Volume (WQCV) Design Volume Vol = (WQCV / 12) * Area	V_{WQCV} = cu ft
F) For Watersheds Outside of the Denver Region, Depth of Average Runoff Producing Storm	d_6 = 0.42 in
G) For Watersheds Outside of the Denver Region, Water Quality Capture Volume (WQCV) Design Volume	$V_{WQCV\ OTHER}$ = 1,776 cu ft
H) User Input of Water Quality Capture Volume (WQCV) Design Volume (Only if a different WQCV Design Volume is desired)	$V_{WQCV\ USER}$ = cu ft
2. Basin Geometry	
A) WQCV Depth (12-inch maximum)	D_{WQCV} = 12 in
B) Rain Garden Side Slopes (Z = 4 min., horiz. dist per unit vertical) (Use "0" if rain garden has vertical walls)	Z = 4.00 ft / ft
C) Mimimum Flat Surface Area	A_{Min} = 976 sq ft
D) Actual Flat Surface Area	A_{Actual} = 1935 sq ft
E) Area at Design Depth (Top Surface Area)	A_{Top} = 2718 sq ft
F) Rain Garden Total Volume ($V_T = ((A_{Top} + A_{Actual}) / 2) * Depth$)	V_T= 2,327 cu ft
3. Growing Media	Choose One: (●) 18" Rain Garden Growing Media; ( ) Other (Explain):
4. Underdrain System	
A) Are underdrains provided?	Choose One: (●) YES; ( ) NO
B) Underdrain system orifice diameter for 12 hour drain time	
i) Distance From Lowest Elevation of the Storage Volume to the Center of the Orifice	y = 1.5 ft
ii) Volume to Drain in 12 Hours	Vol_{12} = 1,776 cu ft
iii) Orifice Diameter, 3/8" Minimum	D_O = 1 1/16 in

Design Procedure Form: Rain Garden (RG)

Designer: Marc A. Whorton, P.E.
Company: Classic Consulting
Date: September 20, 2023
Project: Retreat at TimberRidge Filing No. 3
Location: Arroya Lane (Rain Garden 1)

5. Impermeable Geomembrane Liner and Geotextile Separator Fabric A) Is an impermeable liner provided due to proximity of structures or groundwater contamination?	Choose One ○ YES ● NO
6. Inlet / Outlet Control A) Inlet Control	Choose One ○ Sheet Flow- No Energy Dissipation Required ● Concentrated Flow- Energy Dissipation Provided
7. Vegetation	Choose One ● Seed (Plan for frequent weed control) ○ Plantings ○ Sand Grown or Other High Infiltration Sod
8. Irrigation A) Will the rain garden be irrigated?	Choose One ○ YES ○ NO

Notes:

DETENTION BASIN STAGE-STORAGE TABLE BUILDER

MHFD-Detention, Version 4.06 (July 2022)

Project: **RETREAT AT TIMBERRIDGE FILING NO. 3**

Basin ID: **RAIN GARDEN 1**

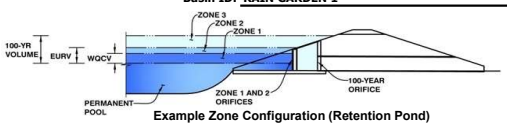

Example Zone Configuration (Retention Pond)

Watershed Information

Selected BMP Type =	**RG**	
Watershed Area =	5.00	acres
Watershed Length =	1,000	ft
Watershed Length to Centroid =	300	ft
Watershed Slope =	0.044	ft/ft
Watershed Imperviousness =	22.40%	percent
Percentage Hydrologic Soil Group A =	0.0%	percent
Percentage Hydrologic Soil Group B =	100.0%	percent
Percentage Hydrologic Soil Groups C/D =	0.0%	percent
Target WQCV Drain Time =	12.0	hours
Location for 1-hr Rainfall Depths =	User Input	

After providing required inputs above including 1-hour rainfall depths, click 'Run CUHP' to generate runoff hydrographs using the embedded Colorado Urban Hydrograph Procedure.

			Optional User Overrides	
Water Quality Capture Volume (WQCV) =	0.042	acre-feet		acre-feet
Excess Urban Runoff Volume (EURV) =	0.112	acre-feet		acre-feet
2-yr Runoff Volume (P1 = 1.19 in.) =	0.118	acre-feet	1.19	inches
5-yr Runoff Volume (P1 = 1.5 in.) =	0.209	acre-feet	1.50	inches
10-yr Runoff Volume (P1 = 1.75 in.) =	0.294	acre-feet	1.75	inches
25-yr Runoff Volume (P1 = 2 in.) =	0.430	acre-feet	2.00	inches
50-yr Runoff Volume (P1 = 2.25 in.) =	0.529	acre-feet	2.25	inches
100-yr Runoff Volume (P1 = 2.52 in.) =	0.664	acre-feet	2.52	inches
500-yr Runoff Volume (P1 = 3.85 in.) =	1.221	acre-feet	3.85	inches
Approximate 2-yr Detention Volume =	0.078	acre-feet		
Approximate 5-yr Detention Volume =	0.114	acre-feet		
Approximate 10-yr Detention Volume =	0.179	acre-feet		
Approximate 25-yr Detention Volume =	0.217	acre-feet		
Approximate 50-yr Detention Volume =	0.230	acre-feet		
Approximate 100-yr Detention Volume =	0.279	acre-feet		

Define Zones and Basin Geometry

Zone 1 Volume (WQCV) =	0.042	acre-feet
Zone 2 Volume (100-year - Zone 1) =	0.238	acre-feet
Select Zone 3 Storage Volume (Optional) =		acre-feet
Total Detention Basin Volume =	0.279	acre-feet
Initial Surcharge Volume (ISV) =	N/A	ft^3
Initial Surcharge Depth (ISD) =	N/A	ft
Total Available Detention Depth (H_{total}) =	user	ft
Depth of Trickle Channel (H_{TC}) =	N/A	ft
Slope of Trickle Channel (S_{TC}) =	N/A	ft/ft
Slopes of Main Basin Sides (S_{main}) =	user	H:V
Basin Length-to-Width Ratio ($R_{L/W}$) =	user	
Initial Surcharge Area (A_{ISV}) =	user	ft^2
Surcharge Volume Length (L_{ISV}) =	user	ft
Surcharge Volume Width (W_{ISV}) =	user	ft
Depth of Basin Floor (H_{FLOOR}) =	user	ft
Length of Basin Floor (L_{FLOOR}) =	user	ft
Width of Basin Floor (W_{FLOOR}) =	user	ft
Area of Basin Floor (A_{FLOOR}) =	user	ft^2
Volume of Basin Floor (V_{FLOOR}) =	user	ft^3
Depth of Main Basin (H_{MAIN}) =	user	ft
Length of Main Basin (L_{MAIN}) =	user	ft
Width of Main Basin (W_{MAIN}) =	user	ft
Area of Main Basin (A_{MAIN}) =	user	ft^2
Volume of Main Basin (V_{MAIN}) =	user	ft^3
Calculated Total Basin Volume (V_{total}) =	**user**	acre-feet

Depth Increment = 1.00 ft

Stage - Storage Description	Stage (ft)	Optional Override Stage (ft)	Length (ft)	Width (ft)	Area (ft^2)	Optional Override Area (ft^2)	Area (acre)	Volume (ft^3)	Volume (ac-ft)
Media Surface	--	0.00	--	--	--	1,922	0.044		
7234	--	1.50	--	--	--	3,119	0.072	3,781	0.087
7235	--	2.50	--	--	--	4,065	0.093	7,373	0.169
7236.5	--	4.00	--	--	--	5,688	0.131	14,687	0.337

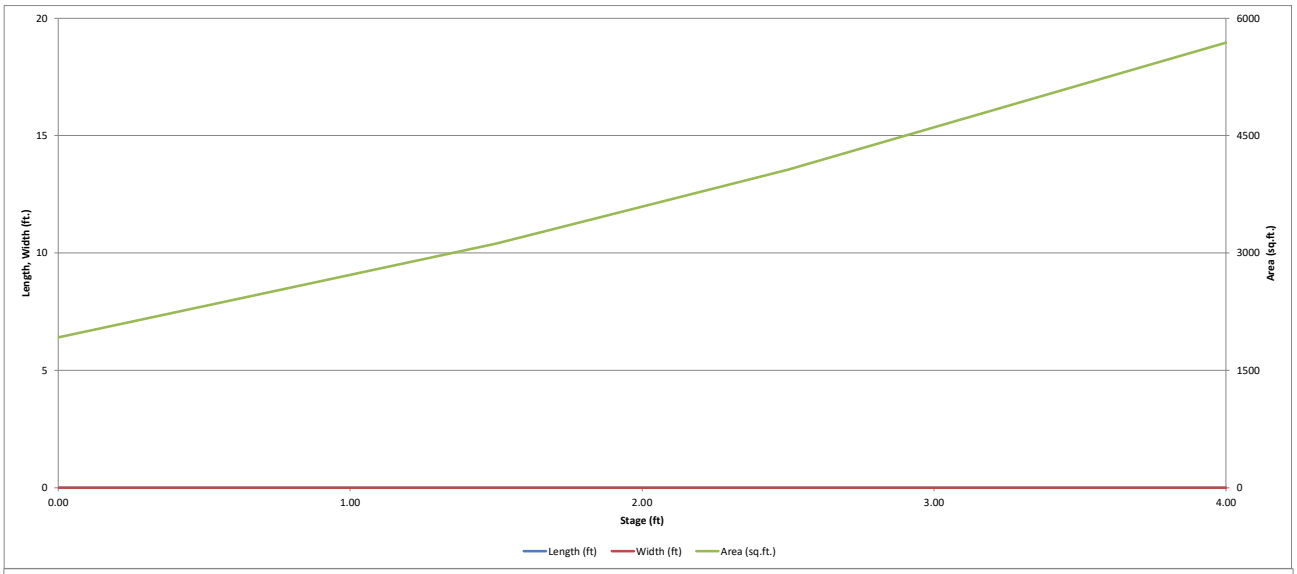
20
15
10
5
0
6000
4500
3000
1500
0
Length, Width (ft.)
Area (sq.ft.)
0.00
1.00
2.00
3.00
4.00
Stage (ft)
Length (ft)
Width (ft)
Area (sq.ft.)

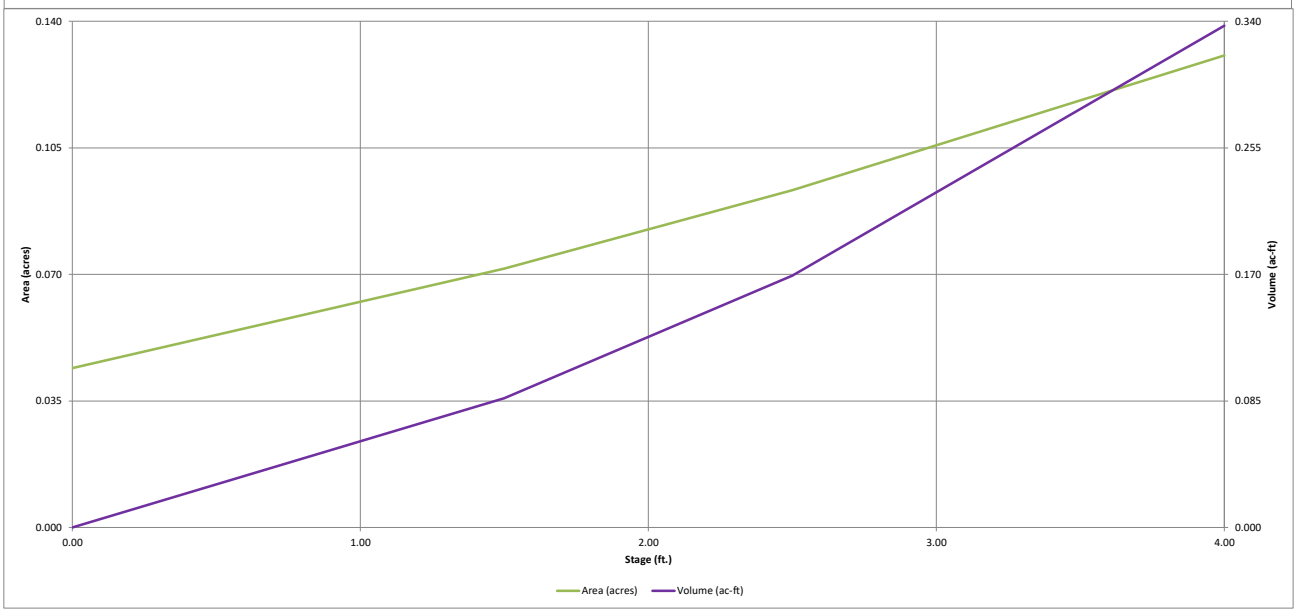
0.140
0.105
0.070
0.035
0.000
0.340
0.255
0.170
0.085
0.000
Area (acres)
Volume (ac-ft)
0.00
1.00
2.00
3.00
4.00
Stage (ft.)
Area (acres)
Volume (ac-ft)

DETENTION BASIN OUTLET STRUCTURE DESIGN

MHFD-Detention, Version 4.06 (July 2022)

Project: **RETREAT AT TIMBERRIDGE FILING NO. 3**

Basin ID: **RAIN GARDEN 1**

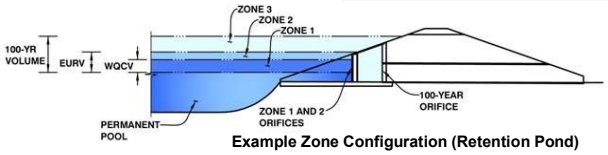

Example Zone Configuration (Retention Pond)

	Estimated Stage (ft)	Estimated Volume (ac-ft)	Outlet Type
Zone 1 (WQCV)	0.81	0.042	Filtration Media
Zone 2 (100-year)	3.54	0.238	Weir&Pipe (Restrict)
Zone 3			
Total (all zones)		0.279	

User Input: Orifice at Underdrain Outlet (typically used to drain WQCV in a Filtration BMP)

Underdrain Orifice Invert Depth =	1.50	ft (distance below the filtration media surface)	Underdrain Orifice Area =	0.0	ft^2
Underdrain Orifice Diameter =	1.08	inches	Underdrain Orifice Centroid =	0.05	feet

Calculated Parameters for Underdrain

User Input: Orifice Plate with one or more orifices or Elliptical Slot Weir (typically used to drain WQCV and/or EURV in a sedimentation BMP)

Centroid of Lowest Orifice =	N/A	ft (relative to basin bottom at Stage = 0 ft)	WQ Orifice Area per Row =	N/A	ft^2
Depth at top of Zone using Orifice Plate =	N/A	ft (relative to basin bottom at Stage = 0 ft)	Elliptical Half-Width =	N/A	feet
Orifice Plate: Orifice Vertical Spacing =	N/A	inches	Elliptical Slot Centroid =	N/A	feet
Orifice Plate: Orifice Area per Row =	N/A	sq. inches	Elliptical Slot Area =	N/A	ft^2

Calculated Parameters for Plate

User Input: Stage and Total Area of Each Orifice Row (numbered from lowest to highest)

	Row 1 (optional)	Row 2 (optional)	Row 3 (optional)	Row 4 (optional)	Row 5 (optional)	Row 6 (optional)	Row 7 (optional)	Row 8 (optional)
Stage of Orifice Centroid (ft)	N/A	N/A	N/A	N/A	N/A	N/A	N/A	N/A
Orifice Area (sq. inches)	N/A	N/A	N/A	N/A	N/A	N/A	N/A	N/A

	Row 9 (optional)	Row 10 (optional)	Row 11 (optional)	Row 12 (optional)	Row 13 (optional)	Row 14 (optional)	Row 15 (optional)	Row 16 (optional)
Stage of Orifice Centroid (ft)	N/A	N/A	N/A	N/A	N/A	N/A	N/A	N/A
Orifice Area (sq. inches)	N/A	N/A	N/A	N/A	N/A	N/A	N/A	N/A

User Input: Vertical Orifice (Circular or Rectangular)

	Not Selected	Not Selected	
Invert of Vertical Orifice =			ft (relative to basin bottom at Stage = 0 ft)
Depth at top of Zone using Vertical Orifice =			ft (relative to basin bottom at Stage = 0 ft)
Vertical Orifice Diameter =			inches

Calculated Parameters for Vertical Orifice

	Not Selected	Not Selected	
Vertical Orifice Area =			ft^2
Vertical Orifice Centroid =			feet

User Input: Overflow Weir (Dropbox with Flat or Sloped Grate and Outlet Pipe OR Rectangular/Trapezoidal Weir and No Outlet Pipe)

	Zone 2 Weir	Not Selected	
Overflow Weir Front Edge Height, Ho =	1.00	1.95	ft (relative to basin bottom at Stage = 0 ft)
Overflow Weir Front Edge Length =	3.00		feet
Overflow Weir Grate Slope =	4.00		H:V
Horiz. Length of Weir Sides =	3.00		feet
Overflow Grate Type =	Close Mesh Grate		
Debris Clogging % =	50%		%

Calculated Parameters for Overflow Weir

	Zone 2 Weir	Not Selected	
Height of Grate Upper Edge, H_t =	1.75		feet
Overflow Weir Slope Length =	3.09		feet
Grate Open Area / 100-yr Orifice Area =	9.67		
Overflow Grate Open Area w/o Debris =	7.34		ft^2
Overflow Grate Open Area w/ Debris =	3.67		ft^2

User Input: Outlet Pipe w/ Flow Restriction Plate (Circular Orifice, Restrictor Plate, or Rectangular Orifice)

	Zone 2 Restrictor	Not Selected	
Depth to Invert of Outlet Pipe =	2.00		ft (distance below basin bottom at Stage = 0 ft)
Outlet Pipe Diameter =	18.00		inches
Restrictor Plate Height Above Pipe Invert =	8.00		inches

Calculated Parameters for Outlet Pipe w/ Flow Restriction Plate

	Zone 2 Restrictor	Not Selected	
Outlet Orifice Area =	0.76		ft^2
Outlet Orifice Centroid =	0.39		feet
Half-Central Angle of Restrictor Plate on Pipe =	1.46	N/A	radians

User Input: Emergency Spillway (Rectangular or Trapezoidal)

Spillway Invert Stage=	2.50	ft (relative to basin bottom at Stage = 0 ft)
Spillway Crest Length =	10.00	feet
Spillway End Slopes =	3.00	H:V
Freeboard above Max Water Surface =	1.00	feet

Calculated Parameters for Spillway

Spillway Design Flow Depth=	0.39	feet
Stage at Top of Freeboard =	3.89	feet
Basin Area at Top of Freeboard =	0.13	acres
Basin Volume at Top of Freeboard =	0.32	acre-ft

Routed Hydrograph Results

The user can override the default CUHP hydrographs and runoff volumes by entering new values in the Inflow Hydrographs table (Columns W through AF).

Design Storm Return Period =	WQCV	EURV	2 Year	5 Year	10 Year	25 Year	50 Year	100 Year	500 Year
One-Hour Rainfall Depth (in) =	N/A	N/A	1.19	1.50	1.75	2.00	2.25	2.52	3.85
CUHP Runoff Volume (acre-ft) =	0.042	0.112	0.118	0.209	0.294	0.430	0.529	0.664	1.221
Inflow Hydrograph Volume (acre-ft) =	N/A	N/A	0.118	0.209	0.294	0.430	0.529	0.664	1.221
CUHP Predevelopment Peak Q (cfs) =	N/A	N/A	0.6	1.6	2.4	4.3	5.4	6.7	12.6
OPTIONAL Override Predevelopment Peak Q (cfs) =	N/A	N/A							
Predevelopment Unit Peak Flow, q (cfs/acre) =	N/A	N/A	0.11	0.32	0.48	0.86	1.08	1.35	2.51
Peak Inflow Q (cfs) =	N/A	N/A	1.5	2.7	3.5	5.5	6.6	8.1	14.3
Peak Outflow Q (cfs) =	0.0	3.5	0.6	1.7	2.6	4.7	5.9	7.0	13.7
Ratio Peak Outflow to Predevelopment Q =	N/A	N/A	N/A	1.0	1.1	1.1	1.1	1.0	1.1
Structure Controlling Flow =	Filtration Media	Overflow Weir 1	Overflow Weir 1	Overflow Weir 1	Overflow Weir 1	Overflow Weir 1	Overflow Weir 1	Outlet Plate 1	Spillway
Max Velocity through Grate 1 (fps) =	N/A	0.70	0.08	0.2	0.3	0.6	0.8	0.9	1.0
Max Velocity through Grate 2 (fps) =	N/A	N/A	N/A	N/A	N/A	N/A	N/A	N/A	N/A
Time to Drain 97% of Inflow Volume (hours) =	12	16	18	17	16	15	14	13	9
Time to Drain 99% of Inflow Volume (hours) =	**12**	16	18	18	18	18	17	17	15
Maximum Ponding Depth (ft) =	0.82	1.84	1.26	1.46	1.58	1.80	1.90	2.08	2.83
Area at Maximum Ponding Depth (acres) =	0.06	0.08	0.07	0.07	0.07	0.08	0.08	0.08	0.10
Maximum Volume Stored (acre-ft) =	0.042	0.112	0.069	0.083	0.093	0.109	0.116	0.131	0.200

DETENTION BASIN OUTLET STRUCTURE DESIGN

MHFD-Detention, Version 4.06 (July 2022)

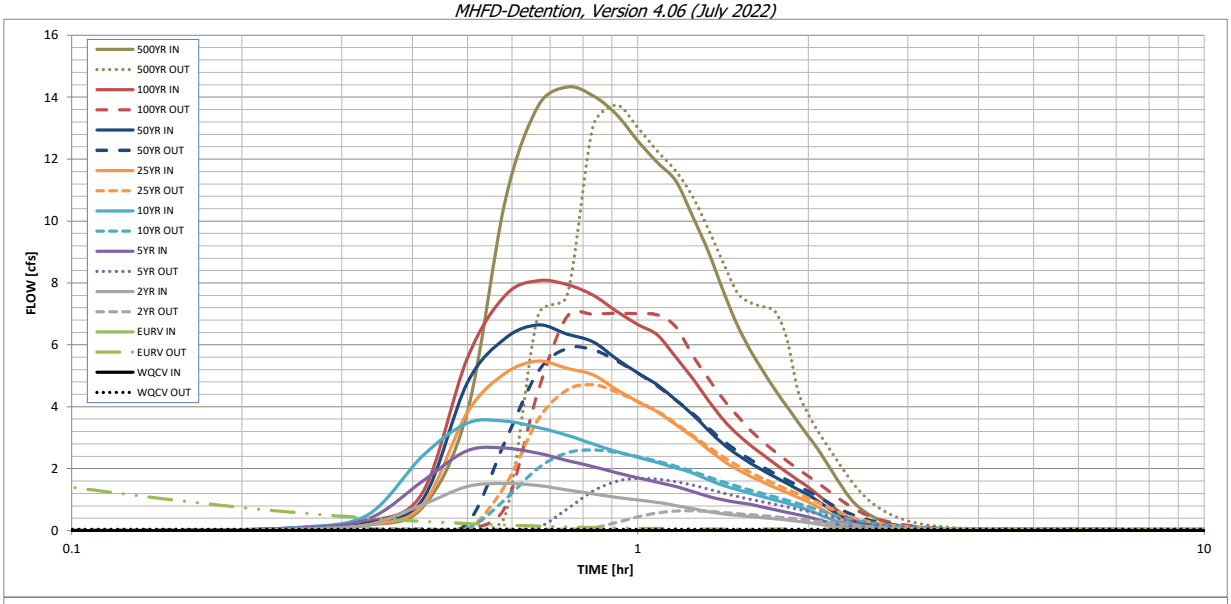

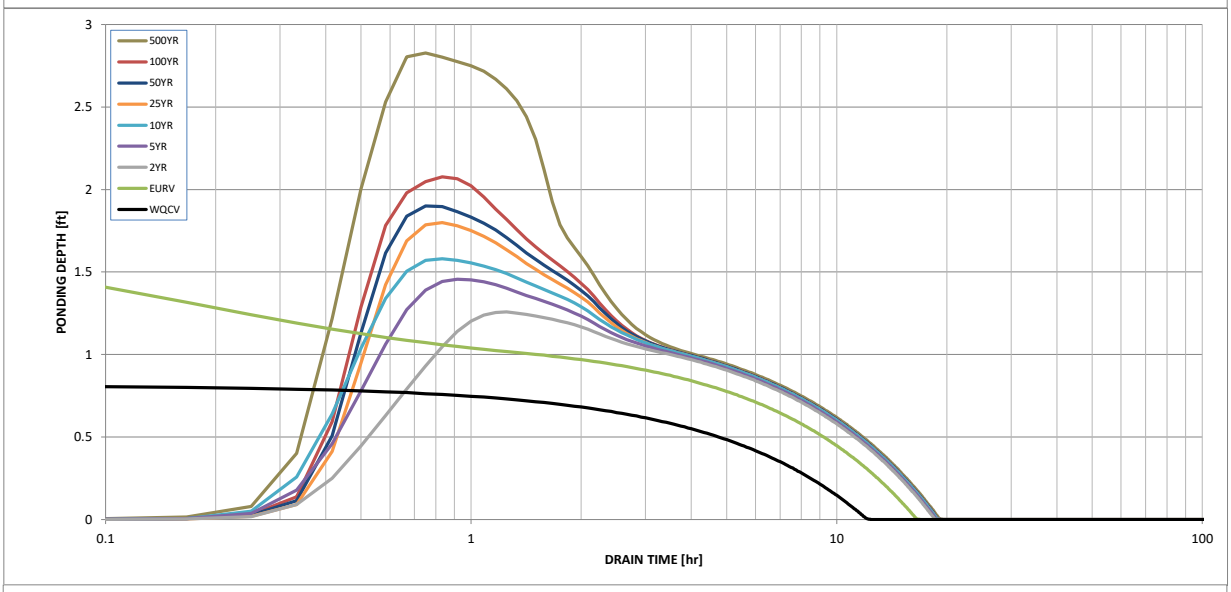

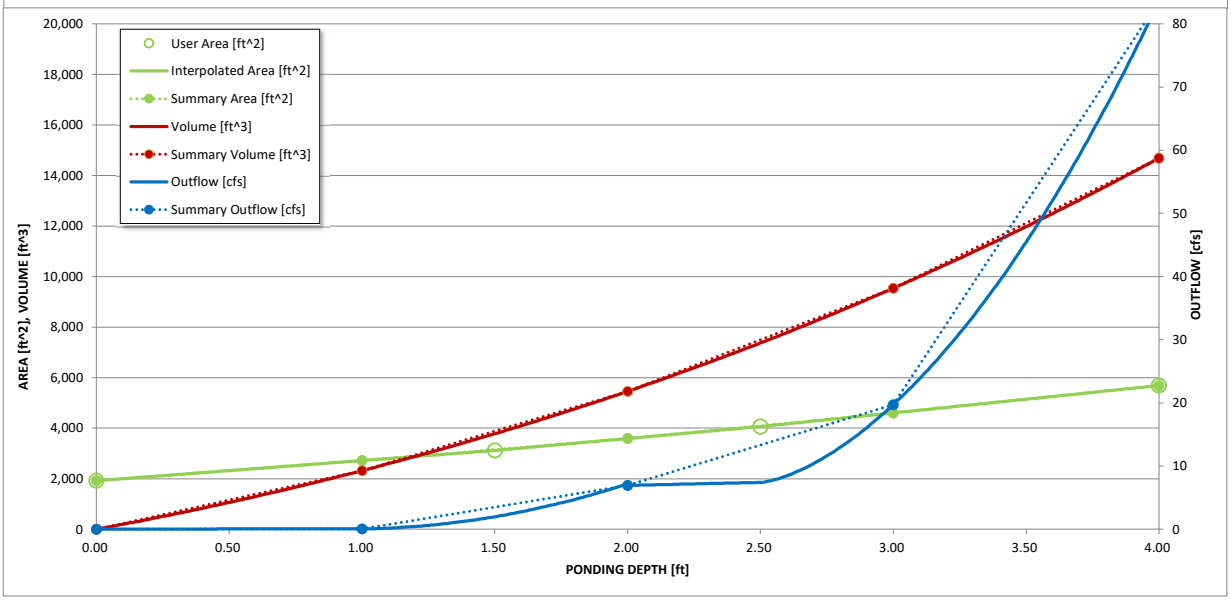

S-A-V-D Chart Axis Override	X-axis	Left Y-Axis	Right Y-Axis
minimum bound			
maximum bound			

DETENTION BASIN OUTLET STRUCTURE DESIGN

Outflow Hydrograph Workbook Filename:

Inflow Hydrographs

The user can override the calculated inflow hydrographs from this workbook with inflow hydrographs developed in a separate program.

	SOURCE	CUHP	CUHP	CUHP	CUHP	CUHP	CUHP	CUHP	CUHP	CUHP
Time Interval	TIME	WQCV [cfs]	EURV [cfs]	2 Year [cfs]	5 Year [cfs]	10 Year [cfs]	25 Year [cfs]	50 Year [cfs]	100 Year [cfs]	500 Year [cfs]
5.00 min	0:00:00	0.00	0.00	0.00	0.00	0.00	0.00	0.00	0.00	0.00
	0:05:00	0.00	0.00	0.00	0.00	0.00	0.00	0.00	0.00	0.00
	0:10:00	0.00	0.00	0.00	0.00	0.00	0.00	0.01	0.00	0.04
	0:15:00	0.00	0.00	0.05	0.09	0.11	0.07	0.09	0.09	0.17
	0:20:00	0.00	0.00	0.19	0.37	0.51	0.19	0.24	0.29	0.75
	0:25:00	0.00	0.00	0.83	1.59	2.41	0.81	1.00	1.21	3.85
	0:30:00	0.00	0.00	1.43	2.58	3.47	3.83	4.78	5.58	10.67
	0:35:00	0.00	0.00	1.52	2.66	3.54	5.08	6.21	7.60	13.72
	0:40:00	0.00	0.00	1.46	2.50	3.33	5.47	6.64	8.08	14.33
	0:45:00	0.00	0.00	1.31	2.27	3.08	5.24	6.35	7.94	14.05
	0:50:00	0.00	0.00	1.19	2.07	2.80	5.03	6.10	7.61	13.44
	0:55:00	0.00	0.00	1.08	1.87	2.56	4.56	5.55	7.09	12.59
	1:00:00	0.00	0.00	0.99	1.71	2.37	4.16	5.09	6.66	11.88
	1:05:00	0.00	0.00	0.91	1.56	2.20	3.83	4.70	6.31	11.29
	1:10:00	0.00	0.00	0.81	1.42	2.03	3.42	4.22	5.60	10.14
	1:15:00	0.00	0.00	0.71	1.26	1.86	3.02	3.74	4.91	9.00
	1:20:00	0.00	0.00	0.61	1.10	1.64	2.62	3.24	4.20	7.72
	1:25:00	0.00	0.00	0.54	0.99	1.46	2.25	2.79	3.58	6.63
	1:30:00	0.00	0.00	0.49	0.91	1.32	1.97	2.45	3.12	5.80
	1:35:00	0.00	0.00	0.45	0.84	1.20	1.75	2.17	2.75	5.13
	1:40:00	0.00	0.00	0.42	0.76	1.09	1.56	1.94	2.44	4.54
	1:45:00	0.00	0.00	0.38	0.67	0.99	1.39	1.72	2.15	4.01
	1:50:00	0.00	0.00	0.34	0.59	0.89	1.23	1.53	1.89	3.52
	1:55:00	0.00	0.00	0.30	0.52	0.78	1.08	1.34	1.64	3.05
	2:00:00	0.00	0.00	0.26	0.44	0.66	0.93	1.16	1.40	2.61
	2:05:00	0.00	0.00	0.21	0.35	0.53	0.76	0.95	1.15	2.13
	2:10:00	0.00	0.00	0.16	0.27	0.41	0.59	0.74	0.90	1.66
	2:15:00	0.00	0.00	0.12	0.19	0.30	0.43	0.54	0.66	1.22
	2:20:00	0.00	0.00	0.09	0.14	0.23	0.29	0.37	0.45	0.88
	2:25:00	0.00	0.00	0.07	0.11	0.19	0.21	0.27	0.32	0.65
	2:30:00	0.00	0.00	0.05	0.09	0.15	0.16	0.20	0.24	0.48
	2:35:00	0.00	0.00	0.04	0.07	0.12	0.12	0.15	0.17	0.36
	2:40:00	0.00	0.00	0.03	0.06	0.10	0.09	0.11	0.12	0.26
	2:45:00	0.00	0.00	0.03	0.05	0.08	0.07	0.09	0.08	0.19
	2:50:00	0.00	0.00	0.02	0.04	0.06	0.05	0.07	0.06	0.13
	2:55:00	0.00	0.00	0.02	0.03	0.05	0.04	0.05	0.04	0.09
	3:00:00	0.00	0.00	0.01	0.02	0.04	0.03	0.04	0.03	0.07
	3:05:00	0.00	0.00	0.01	0.02	0.03	0.02	0.03	0.03	0.06
	3:10:00	0.00	0.00	0.01	0.01	0.02	0.02	0.02	0.02	0.05
	3:15:00	0.00	0.00	0.01	0.01	0.02	0.01	0.02	0.02	0.04
	3:20:00	0.00	0.00	0.01	0.01	0.01	0.01	0.01	0.01	0.03
	3:25:00	0.00	0.00	0.00	0.00	0.01	0.01	0.01	0.01	0.02
	3:30:00	0.00	0.00	0.00	0.00	0.01	0.00	0.01	0.01	0.01
	3:35:00	0.00	0.00	0.00	0.00	0.00	0.00	0.00	0.00	0.01
	3:40:00	0.00	0.00	0.00	0.00	0.00	0.00	0.00	0.00	0.00
	3:45:00	0.00	0.00	0.00	0.00	0.00	0.00	0.00	0.00	0.00
	3:50:00	0.00	0.00	0.00	0.00	0.00	0.00	0.00	0.00	0.00
	3:55:00	0.00	0.00	0.00	0.00	0.00	0.00	0.00	0.00	0.00
	4:00:00	0.00	0.00	0.00	0.00	0.00	0.00	0.00	0.00	0.00
	4:05:00	0.00	0.00	0.00	0.00	0.00	0.00	0.00	0.00	0.00
	4:10:00	0.00	0.00	0.00	0.00	0.00	0.00	0.00	0.00	0.00
	4:15:00	0.00	0.00	0.00	0.00	0.00	0.00	0.00	0.00	0.00
	4:20:00	0.00	0.00	0.00	0.00	0.00	0.00	0.00	0.00	0.00
	4:25:00	0.00	0.00	0.00	0.00	0.00	0.00	0.00	0.00	0.00
	4:30:00	0.00	0.00	0.00	0.00	0.00	0.00	0.00	0.00	0.00
	4:35:00	0.00	0.00	0.00	0.00	0.00	0.00	0.00	0.00	0.00
	4:40:00	0.00	0.00	0.00	0.00	0.00	0.00	0.00	0.00	0.00
	4:45:00	0.00	0.00	0.00	0.00	0.00	0.00	0.00	0.00	0.00
	4:50:00	0.00	0.00	0.00	0.00	0.00	0.00	0.00	0.00	0.00
	4:55:00	0.00	0.00	0.00	0.00	0.00	0.00	0.00	0.00	0.00
	5:00:00	0.00	0.00	0.00	0.00	0.00	0.00	0.00	0.00	0.00
	5:05:00	0.00	0.00	0.00	0.00	0.00	0.00	0.00	0.00	0.00
	5:10:00	0.00	0.00	0.00	0.00	0.00	0.00	0.00	0.00	0.00
	5:15:00	0.00	0.00	0.00	0.00	0.00	0.00	0.00	0.00	0.00
	5:20:00	0.00	0.00	0.00	0.00	0.00	0.00	0.00	0.00	0.00
	5:25:00	0.00	0.00	0.00	0.00	0.00	0.00	0.00	0.00	0.00
	5:30:00	0.00	0.00	0.00	0.00	0.00	0.00	0.00	0.00	0.00
	5:35:00	0.00	0.00	0.00	0.00	0.00	0.00	0.00	0.00	0.00
	5:40:00	0.00	0.00	0.00	0.00	0.00	0.00	0.00	0.00	0.00
	5:45:00	0.00	0.00	0.00	0.00	0.00	0.00	0.00	0.00	0.00
	5:50:00	0.00	0.00	0.00	0.00	0.00	0.00	0.00	0.00	0.00
	5:55:00	0.00	0.00	0.00	0.00	0.00	0.00	0.00	0.00	0.00
	6:00:00	0.00	0.00	0.00	0.00	0.00	0.00	0.00	0.00	0.00

DETENTION BASIN OUTLET STRUCTURE DESIGN

MHFD-Detention, Version 4.06 (July 2022)

Summary Stage-Area-Volume-Discharge Relationships

The user can create a summary S-A-V-D by entering the desired stage increments and the remainder of the table will populate automatically.
The user should graphically compare the summary S-A-V-D table to the full S-A-V-D table in the chart to confirm it captures all key transition points.

Stage - Storage Description	Stage [ft]	Area [ft^2]	Area [acres]	Volume [ft^3]	Volume [ac-ft]	Total Outflow [cfs]
Media Surface	0.00	1,922	0.044	0	0.000	0.00
7235	1.00	2,720	0.062	2,321	0.053	0.05
7236	2.00	3,592	0.082	5,458	0.125	6.95
7237	3.00	4,606	0.106	9,540	0.219	19.73
7238	4.00	5,688	0.131	14,687	0.337	83.61

For best results, include the stages of all grade slope changes (e.g. ISV and Floor) from the S-A-V table on Sheet 'Basin'.

Also include the inverts of all outlets (e.g. vertical orifice, overflow grate, and spillway, where applicable).

Design Procedure Form: Runoff Reduction

UD-BMP (Version 3.07, March 2018)

Designer:	**Marc A. Whorton, P.E.**
Company:	**Classic Consulting**
Date:	**September 20, 2023**
Project:	**Retreat at TimberRidge Filing No. 3**
Location:	**BASINS NOT TRIBUTARY TO PERMANENT SWQ FACILITY**

SITE INFORMATION (User Input in Blue Cells)

WQCV Rainfall Depth: 0.53 inches

Depth of Average Runoff Producing Storm, d_6 = 0.42 inches (for Watersheds Outside of the Denver Region, Figure 3-1 in USDCM Vol. 3)

Area Type	UIA:RPA	UIA:RPA	UIA:RPA	UIA:RPA								
Area ID	Basin G	Basin H1	Basin H2	Basin J								
Downstream Design Point ID	SC	SC	SC	SC								
Downstream BMP Type	None	None	None	None								
DCIA (ft^2)	--	--	--	--								
UIA (ft^2)	55,140	15,430	49,000	11,146								
RPA (ft^2)	24,205	14,150	20,550	12,340								
SPA (ft^2)	--	--	--	--								
HSG A (%)	0%	0%	0%	0%								
HSG B (%)	100%	100%	100%	100%								
HSG C/D (%)	0%	0%	0%	0%								
Average Slope of RPA (ft/ft)	0.025	0.080	0.140	0.030								
UIA:RPA Interface Width (ft)	900.00	360.00	550.00	300.00								

CALCULATED RUNOFF RESULTS

Area ID	Basin G	Basin H1	Basin H2	Basin J								
UIA:RPA Area (ft^2)	79,345	29,580	69,550	23,486								
L / W Ratio	0.10	0.23	0.23	0.26								
UIA / Area	0.6949	0.5216	0.7045	0.4746								
Runoff (in)	0.00	0.00	0.00	0.00								
Runoff (ft^3)	0	0	0	0								
Runoff Reduction (ft^3)	1976	553	1756	399								

CALCULATED WQCV RESULTS

Area ID	Basin G	Basin H1	Basin H2	Basin J								
WQCV (ft^3)	2244	628	1994	454								
WQCV Reduction (ft^3)	2244	628	1994	454								
WQCV Reduction (%)	100%	100%	100%	100%								
Untreated WQCV (ft^3)	0	0	0	0								

CALCULATED DESIGN POINT RESULTS (sums results from all columns with the same Downstream Design Point ID)

Downstream Design Point ID	SC											
DCIA (ft^2)	0											
UIA (ft^2)	130,716											
RPA (ft^2)	71,245											
SPA (ft^2)	0											
Total Area (ft^2)	201,961											
Total Impervious Area (ft^2)	130,716											
WQCV (ft^3)	5,320											
WQCV Reduction (ft^3)	5,320											
WQCV Reduction (%)	100%											
Untreated WQCV (ft^3)	0											

CALCULATED SITE RESULTS (sums results from all columns in worksheet)

Total Area (ft^2)	201,961
Total Impervious Area (ft^2)	130,716
WQCV (ft^3)	5,320
WQCV Reduction (ft^3)	5,320
WQCV Reduction (%)	100%
Untreated WQCV (ft^3)	0

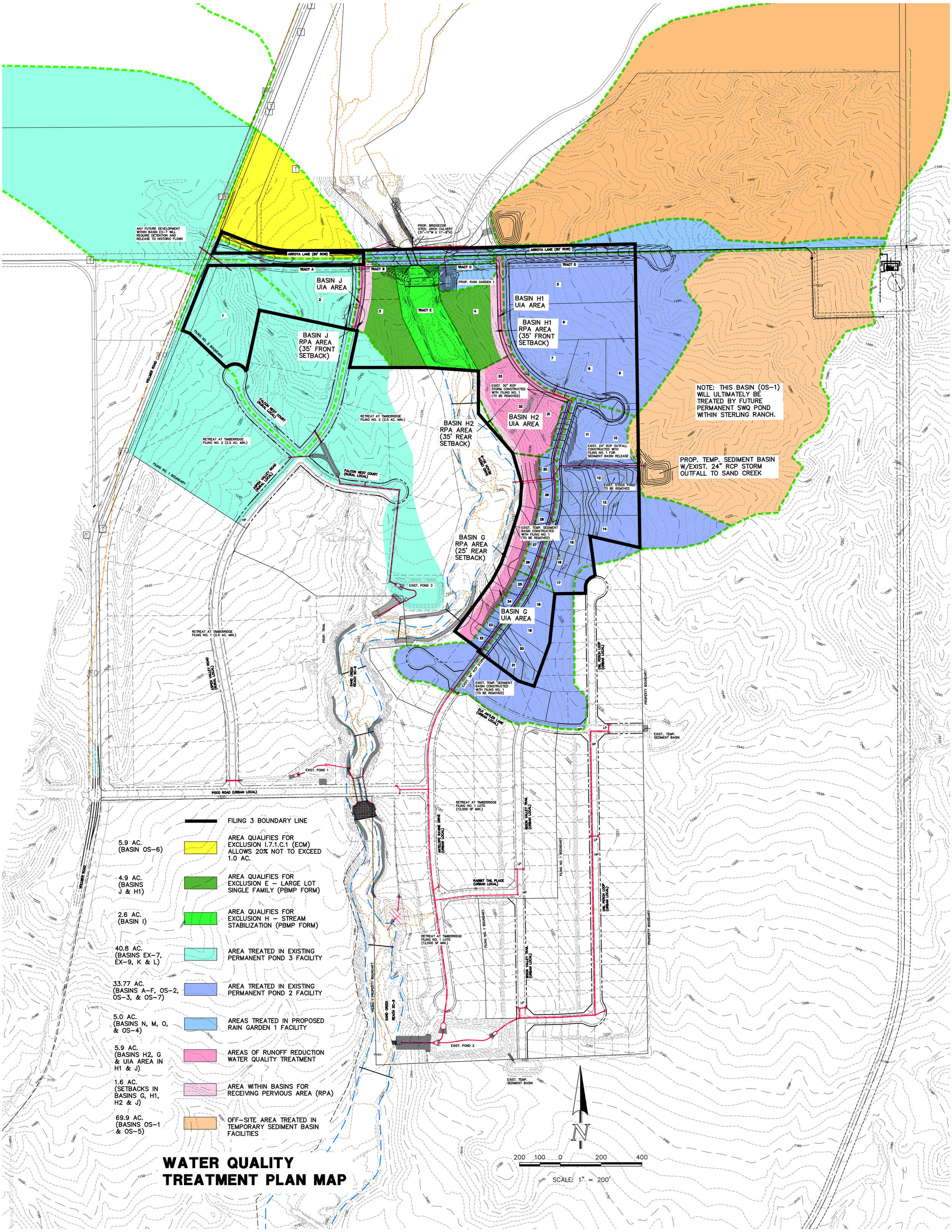

WATER QUALITY TREATMENT PLAN MAP

N:\118530\REPORTS\FDR\118530 SWQ Plan Map.dwg, 9/20/2021

Description

A sediment basin is a temporary pond built on a construction site to capture eroded or disturbed soil transported in storm runoff prior to discharge from the site. Sediment basins are designed to capture site runoff and slowly release it to allow time for settling of sediment prior to discharge. Sediment basins are often constructed in locations that will later be modified to serve as post-construction stormwater basins.

Photograph SB-1. Sediment basin at the toe of a slope. Photo courtesy of WWE.

Appropriate Uses

Most large construction sites (typically greater than 2 acres) will require one or more sediment basins for effective management of construction site runoff. On linear construction projects, sediment basins may be impractical; instead, sediment traps or other combinations of BMPs may be more appropriate.

Sediment basins should not be used as stand-alone sediment controls. Erosion and other sediment controls should also be implemented upstream.

When feasible, the sediment basin should be installed in the same location where a permanent post-construction detention pond will be located.

Design and Installation

The design procedure for a sediment basin includes these steps:

- **Basin Storage Volume**: Provide a storage volume of at least 3,600 cubic feet per acre of drainage area. To the extent practical, undisturbed and/or off-site areas should be diverted around sediment basins to prevent "clean" runoff from mixing with runoff from disturbed areas. For undisturbed areas (both on-site and off-site) that cannot be diverted around the sediment basin, provide a minimum of 500 ft^3/acre of storage for undeveloped (but stable) off-site areas in addition to the 3,600 ft^3/acre for disturbed areas. For stable, developed areas that cannot be diverted around the sediment basin, storage volume requirements are summarized in Table SB-1.

- **Basin Geometry:** Design basin with a minimum length-to-width ratio of 2:1 (L:W). If this cannot be achieved because of site space constraints, baffling may be required to extend the effective distance between the inflow point(s) and the outlet to minimize short-circuiting.

- **Dam Embankment**: It is recommended that embankment slopes be 4:1 (H:V) or flatter and no steeper than 3:1 (H:V) in any location.

Sediment Basins	
Functions	
Erosion Control	No
Sediment Control	Yes
Site/Material Management	No

- **Inflow Structure**: For concentrated flow entering the basin, provide energy dissipation at the point of inflow.

Table SB-1. Additional Volume Requirements for Undisturbed and Developed Tributary Areas Draining through Sediment Basins

Imperviousness (%)	Additional Storage Volume (ft^3) Per Acre of Tributary Area
Undeveloped	500
10	800
20	1230
30	1600
40	2030
50	2470
60	2980
70	3560
80	4360
90	5300
100	6460

- **Outlet Works**: The outlet pipe shall extend through the embankment at a minimum slope of 0.5 percent. Outlet works can be designed using one of the following approaches:
  - **Riser Pipe (Simplified Detail):** Detail SB-1 provides a simplified design for basins treating no more than 15 acres.
  - **Orifice Plate or Riser Pipe**: Follow the design criteria for Full Spectrum Detention outlets in the EDB Fact Sheet provided in Chapter 4 of this manual for sizing of outlet perforations with an emptying time of approximately 72 hours. In lieu of the trash rack, pack uniformly sized 1½ - to 2-inch gravel in front of the plate or surrounding the riser pipe. This gravel will need to be cleaned out frequently during the construction period as sediment accumulates within it. The gravel pack will need to be removed and disposed of following construction to reclaim the basin for use as a permanent detention facility. If the basin will be used as a permanent extended detention basin for the site, a trash rack will need to be installed once contributing drainage areas have been stabilized and the gravel pack and accumulated sediment have been removed.
  - **Floating Skimmer**: If a floating skimmer is used, install it using manufacturer's recommendations. Illustration SB-1 provides an illustration of a Faircloth Skimmer Floating Outlet™, one of the more commonly used floating skimmer outlets. A skimmer should be designed to release the design volume in no less than 48 hours. The use of a floating skimmer outlet can increase the sediment capture efficiency of a basin significantly. A floating outlet continually decants cleanest water off the surface of the pond and releases cleaner water than would discharge from a perforated riser pipe or plate.

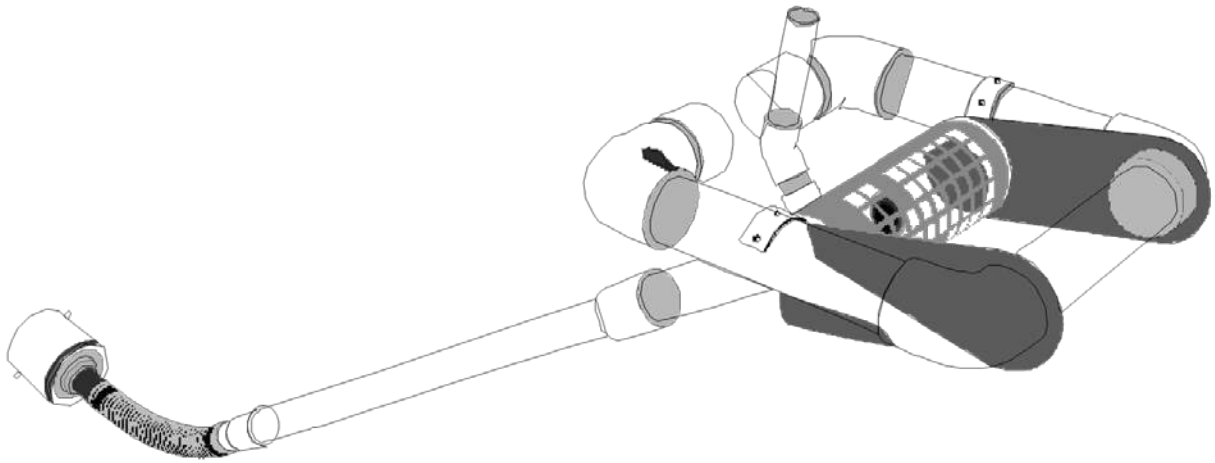

Illustration SB-1. Outlet structure for a temporary sediment basin - Faircloth Skimmer Floating Outlet. Illustration courtesy of J. W. Faircloth & Sons, Inc., FairclothSkimmer.com.

- **Outlet Protection and Spillway:** Consider all flow paths for runoff leaving the basin, including protection at the typical point of discharge as well as overtopping.
  - **Outlet Protection:** Outlet protection should be provided where the velocity of flow will exceed the maximum permissible velocity of the material of the waterway into which discharge occurs. This may require the use of a riprap apron at the outlet location and/or other measures to keep the waterway from eroding.
  - **Emergency Spillway:** Provide a stabilized emergency overflow spillway for rainstorms that exceed the capacity of the sediment basin volume and its outlet. Protect basin embankments from erosion and overtopping. If the sediment basin will be converted to a permanent detention basin, design and construct the emergency spillway(s) as required for the permanent facility. If the sediment basin will not become a permanent detention basin, it may be possible to substitute a heavy polyvinyl membrane or properly bedded rock cover to line the spillway and downstream embankment, depending on the height, slope, and width of the embankments.

Maintenance and Removal

Maintenance activities include the following:

- Dredge sediment from the basin, as needed to maintain BMP effectiveness, typically when the design storage volume is no more than one-third filled with sediment.
- Inspect the sediment basin embankments for stability and seepage.
- Inspect the inlet and outlet of the basin, repair damage, and remove debris. Remove, clean and replace the gravel around the outlet on a regular basis to remove the accumulated sediment within it and keep the outlet functioning.
- Be aware that removal of a sediment basin may require dewatering and associated permit requirements.
- Do not remove a sediment basin until the upstream area has been stabilized with vegetation.

Final disposition of the sediment basin depends on whether the basin will be converted to a permanent post-construction stormwater basin or whether the basin area will be returned to grade. For basins being converted to permanent detention basins, remove accumulated sediment and reconfigure the basin and outlet to meet the requirements of the final design for the detention facility. If the sediment basin is not to be used as a permanent detention facility, fill the excavated area with soil and stabilize with vegetation.

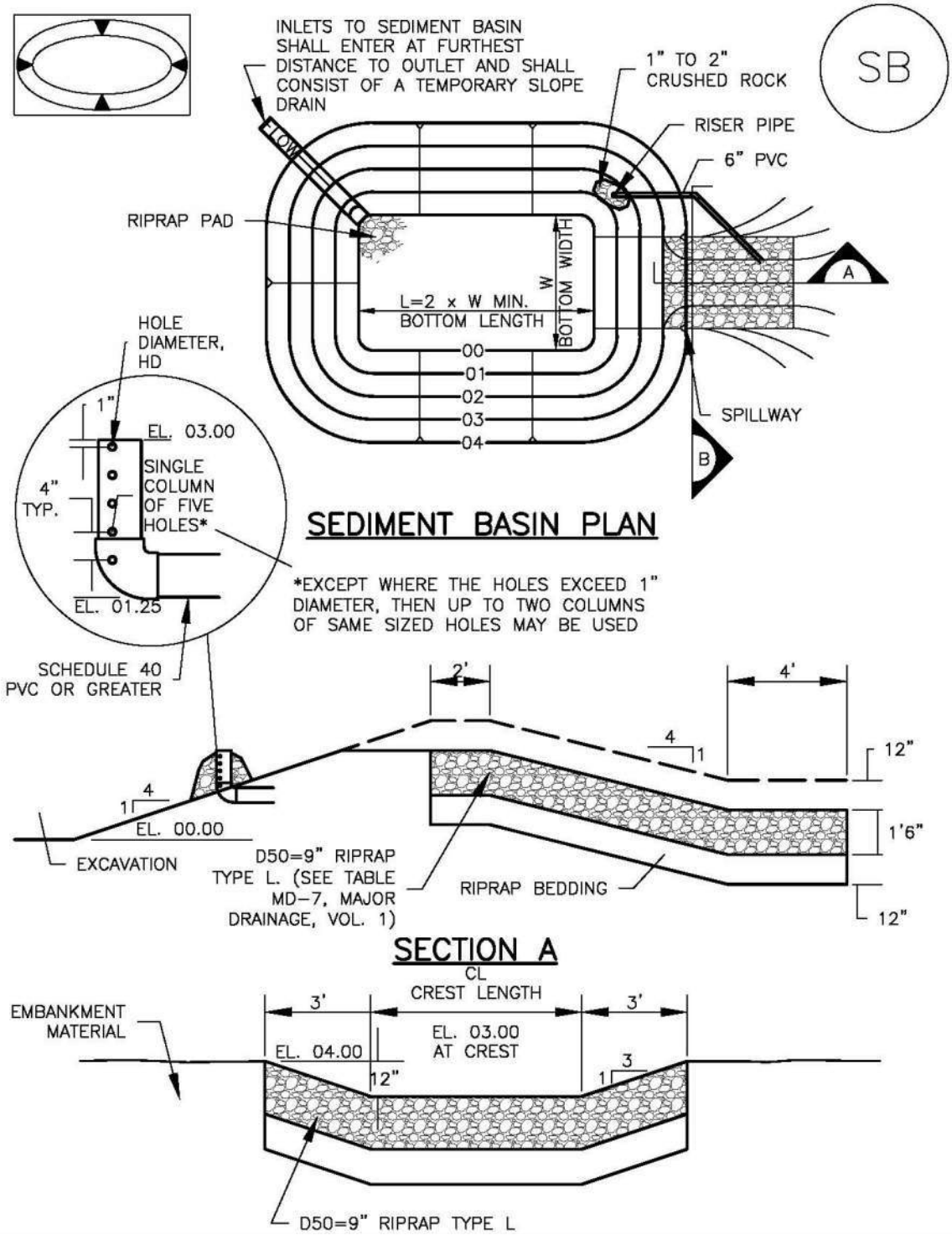
SB
INLETS TO SEDIMENT BASIN SHALL ENTER AT FURTHEST DISTANCE TO OUTLET AND SHALL CONSIST OF A TEMPORARY SLOPE DRAIN
FLOW
1" TO 2" CRUSHED ROCK
RISER PIPE
6" PVC
RIPRAP PAD
W
BOTTOM WIDTH
L=2 x W MIN.
BOTTOM LENGTH
00
01
02
03
04
A
B
SPILLWAY
SEDIMENT BASIN PLAN
HOLE DIAMETER, HD
1"
EL. 03.00
SINGLE COLUMN OF FIVE HOLES*
4" TYP.
EL. 01.25
*EXCEPT WHERE THE HOLES EXCEED 1" DIAMETER, THEN UP TO TWO COLUMNS OF SAME SIZED HOLES MAY BE USED
SCHEDULE 40 PVC OR GREATER
2'
4'
4
1
12"
1'6"
12"
EL. 00.00
EXCAVATION
D50=9" RIPRAP TYPE L. (SEE TABLE MD-7, MAJOR DRAINAGE, VOL. 1)
RIPRAP BEDDING
SECTION A
CL
CREST LENGTH
3'
3'
EMBANKMENT MATERIAL
EL. 04.00
EL. 03.00 AT CREST
12"
3
1
D50=9" RIPRAP TYPE L

TABLE SB–1. SIZING INFORMATION FOR STANDARD SEDIMENT BASIN			
Upstream Drainage Area (rounded to nearest acre), (ac)	Basin Bottom Width (W), (ft)	Spillway Crest Length (CL), (ft)	Hole Diameter (HD), (in)
1	12 ½	2	9/32
2	21	3	13/16
3	28	5	½
4	33 ½	6	9/16
5	38 ½	8	21/32
6	43	9	21/32
7	47 ¼	11	25/32
8	51	12	27/32
9	55	13	7/8
10	58 ¼	15	15/16
11	61	16	31/32
12	64	18	1
13	67 ½	19	1 1/16
14	70 ½	21	1 1/8
15	73 ¼	22	1 3/16

SEDIMENT BASIN INSTALLATION NOTES

1. SEE PLAN VIEW FOR:
   - LOCATION OF SEDIMENT BASIN.
   - TYPE OF BASIN (STANDARD BASIN OR NONSTANDARD BASIN).
   - FOR STANDARD BASIN, BOTTOM WIDTH W, CREST LENGTH CL, AND HOLE DIAMETER, HD.
   - FOR NONSTANDARD BASIN, SEE CONSTRUCTION DRAWINGS FOR DESIGN OF BASIN INCLUDING RISER HEIGHT H, NUMBER OF COLUMNS N, HOLE DIAMETER HD AND PIPE DIAMETER D.

2. FOR STANDARD BASIN, BOTTOM DIMENSION MAY BE MODIFIED AS LONG AS BOTTOM AREA IS NOT REDUCED.

3. SEDIMENT BASINS SHALL BE INSTALLED PRIOR TO ANY OTHER LAND–DISTURBING ACTIVITY THAT RELIES ON ON BASINS AS AS A STORMWATER CONTROL.

4. EMBANKMENT MATERIAL SHALL CONSIST OF SOIL FREE OF DEBRIS, ORGANIC MATERIAL, AND ROCKS OR CONCRETE GREATER THAN 3 INCHES AND SHALL HAVE A MINIMUM OF 15 PERCENT BY WEIGHT PASSING THE NO. 200 SIEVE.

5. EMBANKMENT MATERIAL SHALL BE COMPACTED TO AT LEAST 95 PERCENT OF MAXIMUM DENSITY IN ACCORDANCE WITH ASTM D698.

6. PIPE SCH 40 OR GREATER SHALL BE USED.

7. THE DETAILS SHOWN ON THESE SHEETS PERTAIN TO STANDARD SEDIMENT BASIN(S) FOR DRAINAGE AREAS LESS THAN 15 ACRES. SEE CONSTRUCTION DRAWINGS FOR EMBANKMENT, STORAGE VOLUME, SPILLWAY, OUTLET, AND OUTLET PROTECTION DETAILS FOR ANY SEDIMENT BASIN(S) THAT HAVE BEEN INDIVIDUALLY DESIGNED FOR DRAINAGE AREAS LARGER THAN 15 ACRES.

SEDIMENT BASIN MAINTENANCE NOTES

1. INSPECT BMPs EACH WORKDAY, AND MAINTAIN THEM IN EFFECTIVE OPERATING CONDITION. MAINTENANCE OF BMPs SHOULD BE PROACTIVE, NOT REACTIVE. INSPECT BMPs AS SOON AS POSSIBLE (AND ALWAYS WITHIN 24 HOURS) FOLLOWING A STORM THAT CAUSES SURFACE EROSION, AND PERFORM NECESSARY MAINTENANCE.

2. FREQUENT OBSERVATIONS AND MAINTENANCE ARE NECESSARY TO MAINTAIN BMPs IN EFFECTIVE OPERATING CONDITION. INSPECTIONS AND CORRECTIVE MEASURES SHOULD BE DOCUMENTED THOROUGHLY.

3. WHERE BMPs HAVE FAILED, REPAIR OR REPLACEMENT SHOULD BE INITIATED UPON DISCOVERY OF THE FAILURE.

4. SEDIMENT ACCUMULATED IN BASIN SHALL BE REMOVED AS NEEDED TO MAINTAIN BMP EFFECTIVENESS, TYPICALLY WHEN SEDIMENT DEPTH REACHES ONE FOOT (I.E., TWO FEET BELOW THE SPILLWAY CREST).

5. SEDIMENT BASINS ARE TO REMAIN IN PLACE UNTIL THE UPSTREAM DISTURBED AREA IS STABILIZED AND GRASS COVER IS ACCEPTED BY THE LOCAL JURISDICTION.

6. WHEN SEDIMENT BASINS ARE REMOVED, ALL DISTURBED AREAS SHALL BE COVERED WITH TOPSOIL, SEEDED AND MULCHED OR OTHERWISE STABILIZED AS APPROVED BY LOCAL JURISDICTION.

(DETAILS ADAPTED FROM DOUGLAS COUNTY, COLORADO)

NOTE: MANY JURISDICTIONS HAVE BMP DETAILS THAT VARY FROM UDFCD STANDARD DETAILS. CONSULT WITH LOCAL JURISDICTIONS AS TO WHICH DETAIL SHOULD BE USED WHEN DIFFERENCES ARE NOTED.

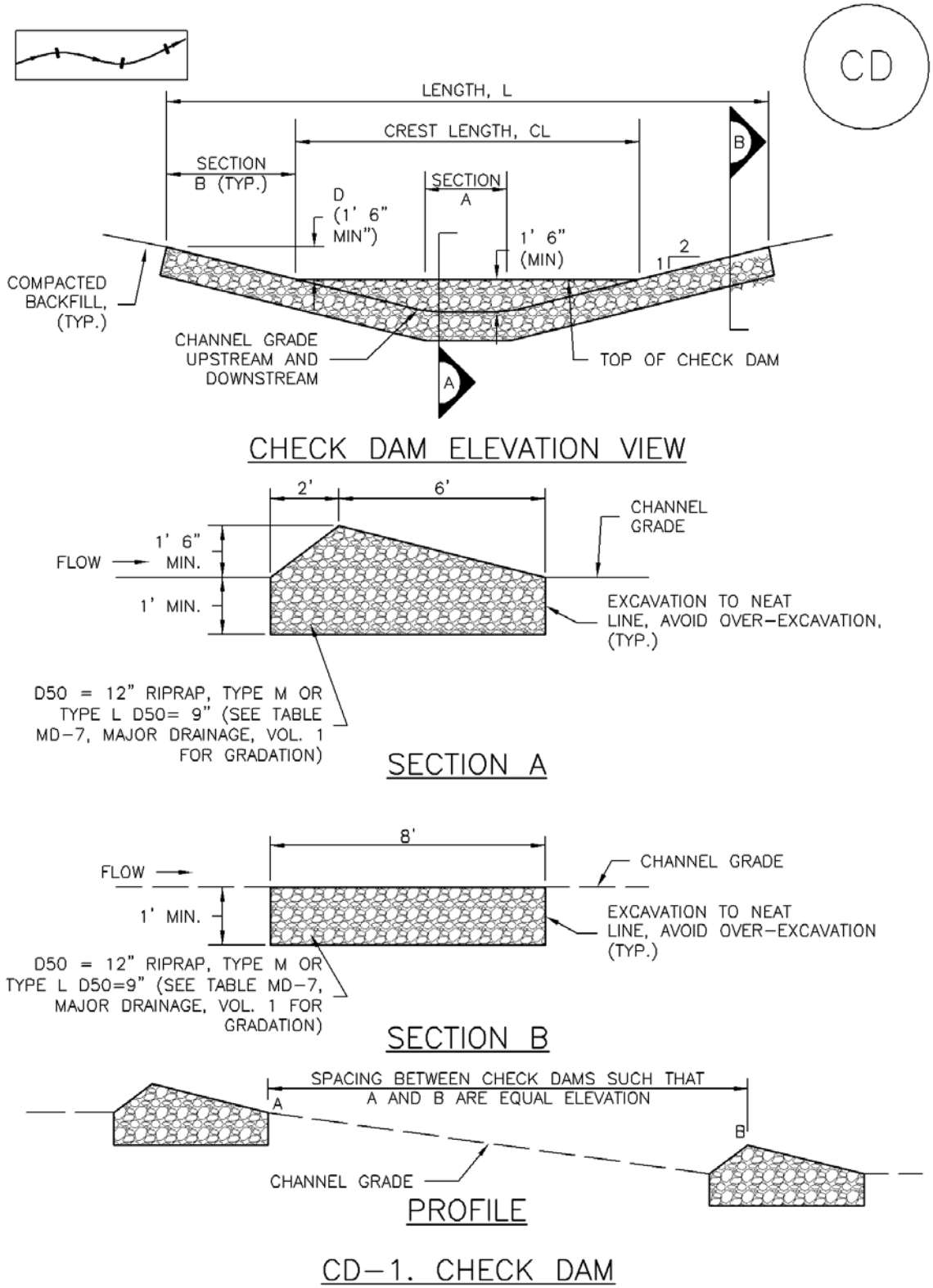
CD
LENGTH, L
CREST LENGTH, CL
SECTION B (TYP.)
SECTION A
D (1' 6" MIN")
1' 6" (MIN)
2
1
B
A
COMPACTED BACKFILL, (TYP.)
CHANNEL GRADE UPSTREAM AND DOWNSTREAM
TOP OF CHECK DAM
CHECK DAM ELEVATION VIEW
2'
6'
CHANNEL GRADE
FLOW
1' 6" MIN.
1' MIN.
EXCAVATION TO NEAT LINE, AVOID OVER-EXCAVATION, (TYP.)
D50 = 12" RIPRAP, TYPE M OR TYPE L D50= 9" (SEE TABLE MD-7, MAJOR DRAINAGE, VOL. 1 FOR GRADATION)
SECTION A
8'
FLOW
CHANNEL GRADE
1' MIN.
EXCAVATION TO NEAT LINE, AVOID OVER-EXCAVATION (TYP.)
D50 = 12" RIPRAP, TYPE M OR TYPE L D50=9" (SEE TABLE MD-7, MAJOR DRAINAGE, VOL. 1 FOR GRADATION)
SECTION B
SPACING BETWEEN CHECK DAMS SUCH THAT A AND B ARE EQUAL ELEVATION
A
B
CHANNEL GRADE
PROFILE
CD-1. CHECK DAM

CHECK DAM INSTALLATION NOTES

1. SEE PLAN VIEW FOR:
   - LOCATION OF CHECK DAMS.
   - CHECK DAM TYPE (CHECK DAM OR REINFORCED CHECK DAM).
   - LENGTH (L), CREST LENGTH (CL), AND DEPTH (D).

2. CHECK DAMS INDICATED ON INITIAL SWMP SHALL BE INSTALLED AFTER CONSTRUCTION FENCE, BUT PRIOR TO ANY UPSTREAM LAND DISTURBING ACTIVITIES.

3. RIPRAP UTILIZED FOR CHECK DAMS SHOULD BE OF APPROPRIATE SIZE FOR THE APPLICATION. TYPICAL TYPES OF RIPRAP USED FOR CHECK DAMS ARE TYPE M (D50 12") OR TYPE L (D50 9").

4. RIPRAP PAD SHALL BE TRENCHED INTO THE GROUND A MINIMUM OF 1'.

5. THE ENDS OF THE CHECK DAM SHALL BE A MINIMUM OF 1' 6" HIGHER THAN THE CENTER OF THE CHECK DAM.

CHECK DAM MAINTENANCE NOTES

1. INSPECT BMPs EACH WORKDAY, AND MAINTAIN THEM IN EFFECTIVE OPERATING CONDITION. MAINTENANCE OF BMPs SHOULD BE PROACTIVE, NOT REACTIVE. INSPECT BMPs AS SOON AS POSSIBLE (AND ALWAYS WITHIN 24 HOURS) FOLLOWING A STORM THAT CAUSES SURFACE EROSION, AND PERFORM NECESSARY MAINTENANCE.

2. FREQUENT OBSERVATIONS AND MAINTENANCE ARE NECESSARY TO MAINTAIN BMPs IN EFFECTIVE OPERATING CONDITION. INSPECTIONS AND CORRECTIVE MEASURES SHOULD BE DOCUMENTED THOROUGHLY.

3. WHERE BMPs HAVE FAILED, REPAIR OR REPLACEMENT SHOULD BE INITIATED UPON DISCOVERY OF THE FAILURE.

4. SEDIMENT ACCUMULATED UPSTREAM OF THE CHECK DAMS SHALL BE REMOVED WHEN THE SEDIMENT DEPTH IS WITHIN ½ OF THE HEIGHT OF THE CREST.

5. CHECK DAMS ARE TO REMAIN IN PLACE UNTIL THE UPSTREAM DISTURBED AREA IS STABILIZED AND APPROVED BY THE LOCAL JURISDICTION.

6. WHEN CHECK DAMS ARE REMOVED, EXCAVATIONS SHALL BE FILLED WITH SUITABLE COMPACTED BACKFILL. DISTURBED AREA SHALL BE SEEDED AND MULCHED AND COVERED WITH GEOTEXTILE OR OTHERWISE STABILIZED IN A MANNER APPROVED BY THE LOCAL JURISDICTION.

(DETAILS ADAPTED FROM DOUGLAS COUNTY, COLORADO, NOT AVAILABLE IN AUTOCAD)

NOTE: MANY JURISDICTIONS HAVE BMP DETAILS THAT VARY FROM UDFCD STANDARD DETAILS. CONSULT WITH LOCAL JURISDICTIONS AS TO WHICH DETAIL SHOULD BE USED WHEN DIFFERENCES ARE NOTED.

Description

A BMP that utilizes bioretention is an engineered, depressed landscape area designed to capture and filter or infiltrate the water quality capture volume (WQCV). BMPs that utilize bioretention are frequently referred to as rain gardens or porous landscape detention areas (PLDs). The term PLD is common in the UDFCD region as this manual first published the BMP by this name in 1999. In an effort to be consistent with terms most prevalent in the stormwater industry, this document generally refers to the treatment process as *bioretention* and to the BMP as a *rain garden*.

Photograph B-1. This recently constructed rain garden provides bioretention of pollutants, as well as an attractive amenity for a residential building. Treatment should improve as vegetation matures.

The design of a rain garden may provide detention for events exceeding that of the WQCV. There are generally two ways to achieve this. The design can provide the flood control volume above the WQCV or the design can provide and slowly release the flood control volume in an area downstream of one or more rain gardens. See the *Storage* chapter in Volume 2 of the USDCM for more information.

This infiltrating BMP requires consultation with a geotechnical engineer when proposed adjacent to a structure. A geotechnical engineer can assist with evaluating the suitability of soils, identifying potential impacts, and establishing minimum distances between the BMP and structures.

Bioretention (Rain Garden)	
Functions	
LID/Volume Red.	Yes
WQCV Capture	Yes
WQCV+Flood Control	Yes
Fact Sheet Includes EURV Guidance	No
Typical Effectiveness for Targeted Pollutants[3]	
Sediment/Solids	Very Good[1]
Nutrients	Moderate
Total Metals	Good
Bacteria	Moderate
Other Considerations	
Life-cycle Costs[4]	Moderate

[1] Not recommended for watersheds with high sediment yields (unless pretreatment is provided).

[3] Based primarily on data from the International Stormwater BMP Database (www.bmpdatabase.org).

[4] Based primarily on BMP-REALCOST available at www.udfcd.org. Analysis based on a single installation (not based on the maximum recommended watershed tributary to each BMP).

Terminology

The term *bioretention* refers to the treatment process although it is also frequently used to describe a BMP that provides biological uptake and retention of the pollutants found in stormwater runoff. This BMP is sometimes referred to as a *porous landscape detention (PLD) area* or *rain garden*.

Benefits

- Bioretention uses multiple treatment processes to remove pollutants, including sedimentation, filtering, adsorption, evapotranspiration, and biological uptake of constituents.
- Stormwater treatment occurs within attractive landscaped areas.
- There is a potential reduction of irrigation requirements by taking advantage of site runoff.

Limitations

- Additional design and construction steps are required for placement of any ponding or infiltration area near or upgradient from a building foundation and/or when expansive (low to high swell) soils exist. This is discussed in the design procedure section.
- In developing or otherwise erosive watersheds, high sediment loads can clog the facility.

Site Selection

This BMP allows WQCV treatment within one or more areas designated for landscape (see design step 7 for suggusted vegetation). In this way, it is an excellent alternative to extended detention basins for small sites. A typical rain garden serves a tributary area of one impervious acre or less, although they can be designed for larger tributary areas. Multiple installations can be used within larger sites. Rain gardens should not be used when a baseflow is anticipated. They are typically small and installed in locations such as:

- Parking lot islands
- Street medians
- Landscape areas between the road and a detached walk
- Planter boxes that collect roof drains

Bioretention requires a stable watershed. Retrofit applications are typically successful for this reason. When the watershed includes phased construction, sparsely vegetated areas, or steep slopes in sandy soils, consider another BMP or provide pretreatment before runoff from these areas reaches the rain garden.

The surface of the rain garden should be flat. For this reason, rain gardens can be more difficult to incorporate into steeply sloping terrain; however, terraced applications of these facilities have been successful in other parts of the country.

When bioretention (and other BMPs used for infiltration) are located adjacent to buildings or pavement areas, protective measures should be implemented to avoid adverse impacts to these structures. Oversaturated subgrade soil underlying a structure can cause the structure to settle or result in moisture-related problems. Wetting of expansive soils or bedrock can cause swelling, resulting in structural movements. A geotechnical engineer should evaluate the potential impact of the BMP on adjacent structures based on an evaluation of the subgrade soil, groundwater, and bedrock conditions at the site. Additional minimum requirements include:

- In locations where subgrade soils do not allow infiltration and/or where infiltration could adversely impact adjacent structures, include a drainage layer (with underdrain) under the growing medium.
- In locations where potentially expansive soils or bedrock exist, placement of a rain garden adjacent to structures and pavement should only be considered if the BMP includes a drainage layer (with underdrain) and an impermeable geomembrane liner designed to restrict seepage.

Designing for Maintenance

Recommended maintenance practices for all BMPs are in Chapter 6 of this manual. During design, consider the following to ensure ease of maintenance over the long-term:

- Do not put a filter sock on the underdrain. This is not necessary and can cause the underdrain to clog.
- The best surface cover for a rain garden is full vegetation. Use rock mulch sparingly within the rain garden because rock mulch limits infiltration and is more difficult to maintain. Wood mulch handles sediment build-up better than rock mulch; however, wood mulch floats and may clog the overflow depending on the configuration of the outlet or settle unevenly. Some municipalities may not allow wood mulch for this reason.

Is Pretreatment Needed?

Designing the inflow gutter to the rain garden at a minimal slope of 0.5% can facilitate sediment and debris deposition prior to flows entering the BMP. Be aware, this will reduce maintenance of the BMP, but may require more frequent sweeping of the gutter to ensure that the sediment does not impede flow into the rain garden.

- Consider all potential maintenance requirements such as mowing (if applicable) and replacement of the growing medium. Consider the method and equipment for each task required. For example, in a large rain garden where the use of hand tools is not feasible, does the shape and configuration of the rain garden allow for removal of the growing medium using a backhoe?
- Provide pre-treatment when it will reduce the extent and frequency of maintenance necessary to maintain function over the life of the BMP. For example, if the tributary is larger than one acre, prone to debris or the use of sand for ice control, consider a small forebay.
- Make the rain garden as shallow as possible. Increasing the depth unnecessarily can create erosive side slopes and complicate maintenance. Shallow rain gardens are also more attractive.
- Design and adjust the irrigation system (temporary or permanent) to provide appropriate water for the establishment and maintenance of selected vegetation.

Design Procedure and Criteria

1. **Subsurface Exploration and Determination of a No-Infiltration, Partial Infiltration, or Full Infiltration Section**: Infiltration BMPs can have three basic types of sections. The appropriate section will depend on land use and activities, proximity to adjacent structures and soil characteristics. Sections of each installation type are shown in Figure B-1.
   - **No-Infiltration Section**: This section includes an underdrain and an impermeable liner that prevents infiltration of stormwater into the subgrade soils. Consider using this section when any of the following conditions exist:
     - The site is a stormwater hotspot and infiltration could result in contamination of groundwater.
     - The site is located over contaminated soils and infiltration could mobilize these contaminants.
     - The facility is located over potentially expansive soils or bedrock that could swell due to infiltration and potentially damage adjacent structures (e.g., building foundation or pavement).
   - **Partial Infiltration Section**: This section does not include an impermeable liner, and allows some infiltration. Stormwater that does not infiltrate is collected and removed by an underdrain

system.

- **Full Infiltration Section**: This section is designed to infiltrate the water stored in the basin into the subgrade below. UDFCD recommends a minimum infiltration rate of 2 times the rate needed to drain the WQCV over 12 hours. A conservative design could utilize the partial infiltration section with the addition of a valve at the underdrain outlet. In the event that infiltration does not remain adequate following construction, the valve could be opened and allow this section to operate as a partial infiltration section.

A geotechnical engineer should scope and perform a subsurface study. Typical geotechnical investigation needed to select and design the section includes:

- Prior to exploration review geologic and geotechnical information to assess near-surface soil, bedrock and groundwater conditions that may be encountered and anticipated ranges of infiltration rate for those materials. For example, if the facility is located adjacent to a structure and the site is located in a general area of known shallow, potentially expansive bedrock, a no-infiltration section will likely be required. It is also possible that this BMP may be infeasible, even with a liner, if there is a significant potential for damage to the adjacent structures (e.g., areas of dipping bedrock).
- Drill exploratory borings or exploratory pits to characterize subsurface conditions beneath the subgrade and develop requirements for subgrade preparation. Drill at least one boring or pit for every 40,000 ft^2, and at least two borings or pits for sites between 10,000 ft^2 and 40,000 ft^2. The boring or pit should extend at least 5 feet below the bottom of the base, and at least 20 feet in areas where there is a potential of encountering potentially expansive soils or bedrock. More borings or pits at various depths may be required by the geotechnical engineer in areas where soil types may change, in low-lying areas where subsurface drainage may collect, or where the water table is likely within 8 feet below the planned bottom of the base or top of subgrade. Installation of temporary monitoring wells in selected borings or pits for monitoring groundwater levels over time should be considered where shallow groundwater is encountered.
- Perform laboratory tests on samples obtained from the borings or pits to initially characterize the subgrade, evaluate the possible section type, and to assess subgrade conditions for supporting traffic loads. Consider the following tests: moisture content (ASTM D 2216); dry density (ASTM D 2936); Atterberg limits (ASTM D 4318); gradation (ASTM D 6913); swell-consolidation (ASTM D 4546); subgrade support testing (R-value, CBR or unconfined compressive strength); and hydraulic conductivity. A geotechnical engineer should determine the appropriate test method based on the soil type.
- For sites where a full infiltration section may be feasible, perform on-site infiltration tests using a double-ring infiltrometer (ASTM D 3385). Perform at least one test for every 160,000 ft^2 and at least two tests for sites between 40,000 ft^2 and 160,000 ft^2. The tests should be located near completed borings or pits so the test results and subsurface conditions encountered in the borings can be compared, and at least one test should be located near the boring or pit showing the most unfavorable infiltration condition. The test should be performed at the planned top of subgrade underlying the growing media.
- Be aware that actual infiltration rates are highly variable dependent on soil type, density and moisture content and degree of compaction as well as other environmental and construction influences. Actual rates can differ an order of magnitude or more from those indicated by infiltration or permeability testing. Select the type of section based on careful assessment of the subsurface exploration and testing data.

The following steps outline the design procedure and criteria, with Figure B-1 providing a corresponding cross-section.

2. **Basin Storage Volume**: Provide a storage volume based on a 12-hour drain time.

   Find the required WQCV (watershed inches of runoff). Using the imperviousness of the tributary area (or effective imperviousness where LID elements are used upstream), use Figure 3-2 located in Chapter 3 of this manual to determine the WQCV based on a 12-hour drain time.

   Calculate the design volume as follows:

$$V = \left[\frac{\text{WQCV}}{12}\right] A \qquad \text{Equation B-1}$$

   Where:

   V= design volume (ft^3)

   A = area of watershed tributary to the rain garden (ft^2)

3. **Basin Geometry:** UDFCD recommends a maximum WQCV ponding depth of 12 inches to maintain vegetation properly. Provide an inlet or other means of overflow at this elevation. Depending on the type of vegetation planted, a greater depth may be utilized to detain larger (more infrequent) events. The bottom surface of the rain garden, also referred to here as the filter area, should be flat. Sediment will reside on the filter area of the rain garden; therefore, if the filter area is too small, it may clog prematurely. If the filter area is not flat, the lowest area of the filter is more likely to clog as it will have a higher sediment loading. Increasing the filter area will reduce clogging and decrease the frequency of maintenance. Equation B-2 provides a minimum filter area allowing for some of the volume to be stored beyond the area of the filter (i.e., above the sideslopes of the rain garden).

Note that the total surcharge volume provided by the design must also equal or exceed the design volume. Where needed to meet the the required volume, also consider the porosity of the media at 14 percent. Use vertical walls or slope the sides of the basin to achieve the required volume. Sideslopes should be no steeper than 4:1 (horizontal:vertical).

$$A_F = 0.02AI \qquad \text{Equation B-2}$$

Where:

A_F= minimum (flat) filter area (ft^2)

A = area tributary to the rain garden (ft^2)

I = imperviousness of area tributary to the rain garden (percent expressed as a decimal)

4. **Growing Medium:** Provide a minimum of 18 inches of growing medium to enable establishment of the roots of the vegetation (see Figure B-1). A previous version of this manual specified a mixture consisting of 85% coarse sand and a 15% compost/shredded paper mixture (by volume). Based on field monitoring of this medium, compost was removed to reduce export of nutrients and fines and silts were added to both benefit the vegetation and increase capture of metals in stormwater.

Table B-1 specifies the growing media as well as other materials discussed in this Fact Sheet**.** Growing media is engineered media that requires a high level of quality control and must almost always be imported. Obtaining a particle size distribution and nutrient analysis is the only way to ensure that the media is acceptable. UDFCD has identified placement of media not meeting the specification as the most frequent cause of failure. Sample the media after delivery and prior to placement or obtain a sample from the supplier in advance of delivery and placement and have this analyzed prior to delivery.

Other Rain Garden Growing Medium Amendments

The specified growing medium was designed for filtration ability, clogging characteristics, and vegetative health. It is important to preserve the function provided by the rain garden growing medium when considering additional materials for incorporation into the growing medium or into the standard section shown in Figure B-1. When desired, amendments may be included to improve water quality or to benefit vegetative health as long as they do not add nutrients, pollutants, or modify the infiltration rate. For example, a number of products, including steel wool, capture and retain dissolved phosphorus (Erickson 2009). When phosphorus is a target pollutant, proprietary materials with similar characteristics may be considered. Do not include amendments such as top soil, sandy loam, and compost.

Table B-1. Material specification for bioretention/rain garden facilities

Material		Specification			Submittals	Testing	Notes
Bioretention Growing Media (soil + organics)	Bioretention soil	Particle size distribution: 80-90% sand (0.05 - 2.0 mm diameter) 3-17% silt (0.002-0.5 mm diameter) 3-17% clay (<0.002 diameter) Chemical attribute and nutrient analysis: pH 6.8 - 7.5 organic matter < 1.5% nitrogen <15 ppm phosphorus < 15 ppm salinity < 6 mmhos/cm			Particle size distribution and nutrient analysis required.		Percentages are in weight.
	Bioretention organics	3 to 5% shredded mulch (by weight of growing media)					bioretention soil required. Aged 6 months (minimum).
Landscape mulch		Shredded hardwood					Aged 6 months (minimum). No weed fabric allowed.
Underdrain aggregate	CDOT filter material (Class B or C as specified)		Mass Percent Passing Square Mesh Siev		Particle size distribution required.		
		Sieve Size	Class B	Class C			
		37.5 mm (1.5")	100				
		19.0 mm (0.75")		100			
		4.75 mm (No.4)	20-60	60-100			
		1.18 um (No. 16)	10-30				
		300 um (No. 50)	0-10	10-30			
		150 um (No. 100)		0-10			
		75 um (No. 200)	0-3	0-3			
Underdrain Pipe		Pipe diameter and type	Maximum slot width (inches)	Minimum open area (per foot)	Required	Pipe must conform to requirements of ASTM designation F949. There shall be no evidence of splitting, cracking, or breaking when the pipe is tested per ASTM test method D2412 in accordance with F949 section 7.5 and ASTM F794 section 8.5.	Contech A-2000 slotted pipe (or equal)
		4-inch slotted PVC	0.032	1.90 in.^{2}			
		6-inch slotted PVC	0.032	1.98 in.^{2}			
Impermeable liner			Thickness 0.76 mm (30 mil)	Test method	Required	Thermal welding required for fully lined facilities (not a cutain). Leak testing in the field required.	
		Thickness, % Tolerance	+/-5	ASTM D 1593			
		Tensile strength, kN/m (lb/in)	12.25 (70)	ASTM D8 82, method B			
		Modulus at 100% elongation, kN/m	5.25 (30)	ASTM D8 82, method B			
		Ultimate elongation, %	350	ASTM D8 82, method A			
		Tear resistance, N(lbs)	38 (8.5)	ASTM D 1004			
		Low temperature impact, ° C (° F)	-29 (-20)	ASTM D 1790			
		Volatile loss, % maximum	0.7	ASTM D8 82, method A			
		Pinholes, no. per 8 m^2 (no. per 10 yd.^{2})	1 (max)	N/A			
		Bonded seam strength, % of tensile	80	N/A			

5. **Underdrain System**: When using an underdrain system, provide a control orifice sized to drain the design volume in 12 hours or more (see Equation B-3). Use a minimum orifice size of 3/8 inch to avoid clogging. This will provide detention and slow release of the WQCV, providing water quality benefits and reducing impacts to downstream channels. Space underdrain pipes a maximum of 20 feet on center. Provide cleanouts to enable maintenance of the underdrain. Cleanouts can also be used to conduct an inspection (by camera) of the underdrain system to ensure that the pipe was not crushed or disconnected during construction.

Calculate the diameter of the orifice for a 12-hour drain time using Equation B-3 (Use a minimum orifice size of 3/8 inch to avoid clogging.):

$$D_{12\text{ hour drain time}} = \sqrt{\frac{V}{1414\, y^{0.41}}} \qquad \text{Equation B-3}$$

Where:

D = orifice diameter (in)

y = distance from the lowest elevation of the storage volume (i.e., surface of the filter) to the center of the orifice (ft)

V = volume (WQCV or the portion of the WQCV in the rain garden) to drain in 12 hours (ft^3)

In previous versions of this manual, UDFCD recommended that the underdrain be placed in an aggregate layer and that a geotextile (separator fabric) be placed between this aggregate and the growing medium. This version of the manual replaces that section with materials that, when used together, eliminate the need for a separator fabric.

The underdrain system should be placed within an 6-inch-thick section of CDOT Class B or Class C filter material meeting the gradation in Table B-1. Use slotted pipe that meets the slot dimensions provided in Table B-3.

6. **Impermeable Geomembrane Liner and Geotextile Separator Fabric:** For no-infiltration sections, install a 30 mil (minimum) PVC geomembrane liner, per Table B-1, on the bottom and sides of the basin, extending up at least to the top of the underdrain layer. Provide at least 9 inches (12 inches if possible) of cover over the membrane where it is attached to the wall to protect the membrane from UV deterioration. The geomembrane should be field-seamed using a dual track welder, which allows for non-destructive testing of almost all field seams. A small amount of single track is allowed in limited areas to seam around pipe perforations, to patch seams removed for destructive seam testing, and for limited repairs. The liner should be installed with slack to prevent tearing due to backfill, compaction, and settling. Place CDOT Class B geotextile separator fabric above the geomembrane to protect it from being punctured during the placement of the filter material above the liner. If the subgrade contains angular rocks or other material that could puncture the geomembrane, smooth-roll the surface to create a suitable surface. If smooth-rolling the surface does not provide a suitable surface, also place the separator fabric between the geomembrane and the underlying subgrade. This should only be done when necessary because fabric placed under the geomembrane can increase seepage losses through pinholes or other geomembrane defects. Connect the geomembrane to perimeter concrete walls around the basin perimeter, creating a watertight seal between the geomembrane and the walls using a continuous batten bar and anchor connection (see Figure B-3). Where the need for the impermeable membrane is not as critical, the membrane can be attached with a nitrile-based vinyl adhesive. Use watertight PVC boots for underdrain pipe penetrations through the liner (see Figure B-2) or the technique shown in photo B-3.

Photograph B-2. The impermeable membrane in this photo has ripped from the bolts due to placement of the media without enough slack in the membrane.

Photograph B-3. Ensure a water-tight connection where the underdrain penetrated the liner. The heat-welded "boot" shown here is an alternative to the clamped detail shown in Figure B-2.

Table B-2. Physical requirements for separator fabric[1]

Property	Class B		Test Method
	Elongation < 50%[2]	Elongation > 50%[2]	
Grab Strength, N (lbs.)	800 (180)	510 (115)	ASTM D 4632
Puncture Resistance, N (lbs.)	310 (70)	180 (40)	ASTM D 4833
Trapezoidal Tear Strength, N (lbs.)	310 (70)	180 (40)	ASTM D 4533
Apparent Opening Size, mm (US Sieve Size)	AOS < 0.3mm (US Sieve Size No. 50)		ASTM D 4751
Permittivity, sec^{-1}	0.02 default value, must also be greater than that of soil		ASTM D 4491
Permeability, cm/sec	k fabric > k soil for all classes		ASTM D 4491
Ultraviolet Degradation at 500 hours	50% strength retained for all classes		ASTM D 4355

[1] Strength values are in the weaker principle direction

[2] As measured in accordance with ASTM D 4632

7. **Inlet and Outlet Control:** In order to provide the proper drain time, the bioretention area can be restricted at the underdrain outlet with an orifice plate or can be designed without an underdrain (provided the subgrade meets the requirements above). Equation B-3 is a simplified equation for sizing an orifice plate for a 12-hour drain time. UD-BMP or UD-Detention, available at www.udfcd.org, also perform this calculation.

   How flow enters and exits the BMP is a function of the overall drainage concept for the site. Curb cuts can be designed to both allow stormwater into the rain garden as well as to provide release of stormwater in excess of the WQCV. Roadside rain gardens located on a steep site might pool and overflow into downstream cells with a single curb cut, level spreader, or outlet structure located at the most downstream cell. When selecting the

Photograph B-4. The curb cut shown allows flows to enter this rain garden while excess flows bypass the facility.

type and location of the outlet structure, ensure runoff will not short-circuit the rain garden. This is a frequent problem when using a curb inlet located outside the rain garden for overflow.

For rain gardens with concentrated points of inflow, provide a forebay and energy dissipation. A depressed concrete slab works best for a forebay. It helps maintain a vertical drop at the inlet and allows for easily removal of sediment using a square shovel. Where rock is used for energy dissipation, provide separator fabric between the rock and growing medium to minimize subsidence.

8. **Vegetation:** UDFCD recommends that the filter area be vegetated with drought tolerant species that thrive in sandy soils. Table B-3 provides a suggested seed mix for sites that will not need to be irrigated after the grass has been established.

   Mix seed well and broadcast, followed by hand raking to cover seed and then mulched. Hydromulching can be effective for large areas. Do not place seed when standing water or snow is present or if the ground is frozen. Weed control is critical in the first two to three years, especially when starting with seed.

   When using sod, specify sand–grown sod. Do not use conventional sod. Conventional sod is grown in clay soil that will seal the filter area, greatly reducing overall function of the BMP.

   When using an impermeable liner, select plants with diffuse (or fibrous) root systems, not taproots. Taproots can damage the liner and/or underdrain pipe. Avoid trees and large shrubs that may interfere with restorative maintenance. Plant these outside of the area of growing medium. Use a cutoff wall to ensure that roots do not grow into the underdrain or place trees and shrubs a conservative distance from the underdrain.

9. **Irrigation:** Provide spray irrigation at or above the WQCV elevation or place temporary irrigation on top of the rain garden surface. Do not place sprinkler heads on the flat surface. Remove temporary irrigation when vegetation is established. If left in place this will become buried over time and will be damaged during maintenance operations.

   Adjust irrigation schedules during the growing season to provide the minimum water necessary to maintain plant health and to maintain the available pore space for infiltration.

Designing for Flood Protection

Provide the WQCV in rain gardens that direct excess flow into to a landscaped basin designed for flood control or design a single basin to provide water quality and flood control. See the *Storage* chapter in Volume 2 of the USDCM for more information. UD-Detention, available at www.udfcd.org, will facilitate design either alternative.

Table B-3. Native seed mix for rain gardens

Common Name	Scientific Name	Variety	PLS[2] lbs per Acre	Ounces per Acre
Sand bluestem	Andropogon hallii	Garden	3.5	
Sideoats grama	Bouteloua curtipendula	Butte	3	
Prairie sandreed	Calamovilfa longifolia	Goshen	3	
Indian ricegrass	Oryzopsis hymenoides	Paloma	3	
Switchgrass	Panicum virgatum	Blackwell	4	
Western wheatgrass	Pascopyrum smithii	Ariba	3	
Little bluestem	Schizachyrium scoparium	Patura	3	
Alkali sacaton	Sporobolus airoides		3	
Sand dropseed	Sporobolus cryptandrus		3	
Pasture sage[1]	Artemisia frigida			2
Blue aster[1]	Aster laevis			4
Blanket flower[1]	Gaillardia aristata			8
Prairie coneflower[1]	Ratibida columnifera			4
Purple prairieclover[1]	Dalea (Petalostemum) purpurea			4
Sub-Totals:			27.5	22
Total lbs per acre:			**28.9**	

[1] Wildflower seed (optional) for a more diverse and natural look.
[2] PLS = Pure Live Seed.

Aesthetic Design

In addition to effective stormwater quality treatment, rain gardens can be attractively incorporated into a site within one or several landscape areas. Aesthetically designed rain gardens will typically either reflect the character of their surroundings or become distinct features within their surroundings. Guidelines for each approach are provided below.

Reflecting the Surrounding

- Determine design characteristics of the surrounding. This becomes the context for the drainage improvement. Use these characteristics in the structure.
- Create a shape or shapes that "fix" the forms surrounding the improvement. Make the improvement part of the existing surrounding.
- The use of material is essential in making any new improvement an integral part of the whole. Select materials that are as similar as possible to the surrounding architectural/engineering materials. Select materials from the same source if possible. Apply materials in the same quantity, manner, and method as original material.
- Size is an important feature in seamlessly blending the addition into its context. If possible, the overall size of the improvement should look very similar to the overall sizes of other similar objects in the improvement area.
- The use of the word texture in terms of the structure applies predominantly to the selection of plant material. The materials used should as closely as possible, blend with the size and texture of other plant material used in the surrounding. The plants may or may not be the same, but should create a similar feel, either individually or as a mass.

Reflective Design

A reflective design borrows the characteristics, shapes, colors, materials, sizes and textures of the built surroundings. The result is a design that fits seamlessly and unobtrusively in its environment.

Creating a Distinct Feature

Designing the rain garden as a distinct feature is limited only by budget, functionality, and client preference. There is far more latitude in designing a rain garden that serves as a distinct feature. If this is the intent, the main consideration beyond functionality is that the improvement create an attractive addition to its surroundings. The use of form, materials, color, and so forth focuses on the improvement itself and does not necessarily reflect the surroundings, depending on the choice of the client or designer.

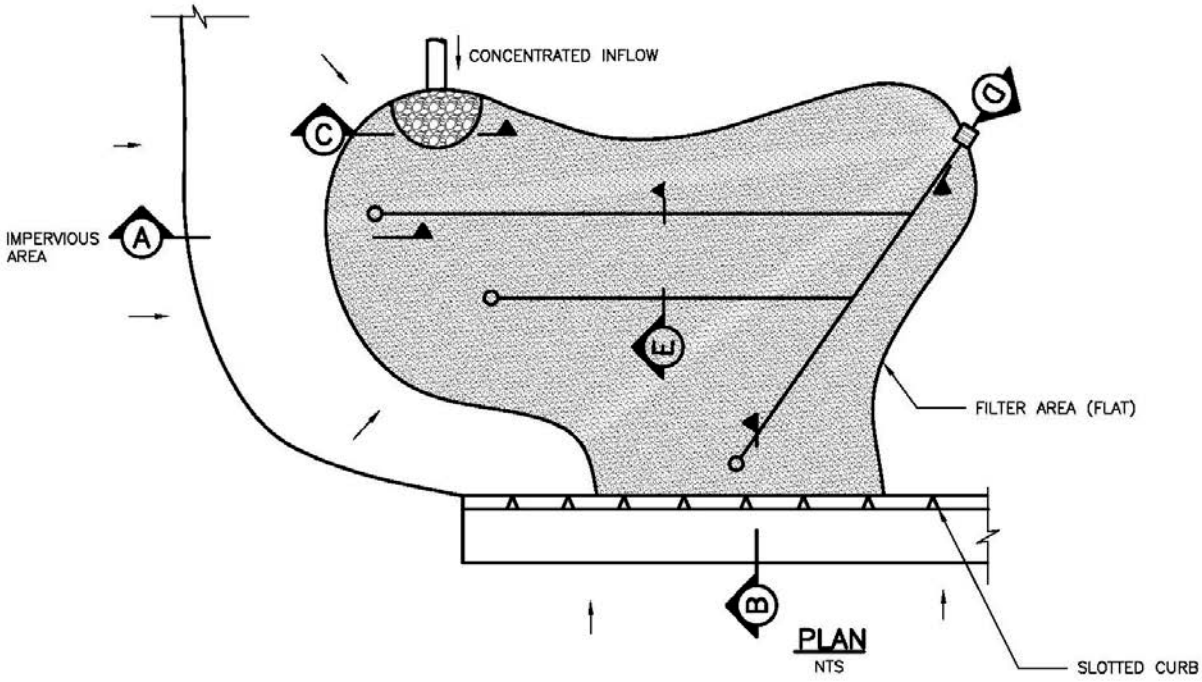

Figure B-1 – Typical rain garden plan and sections

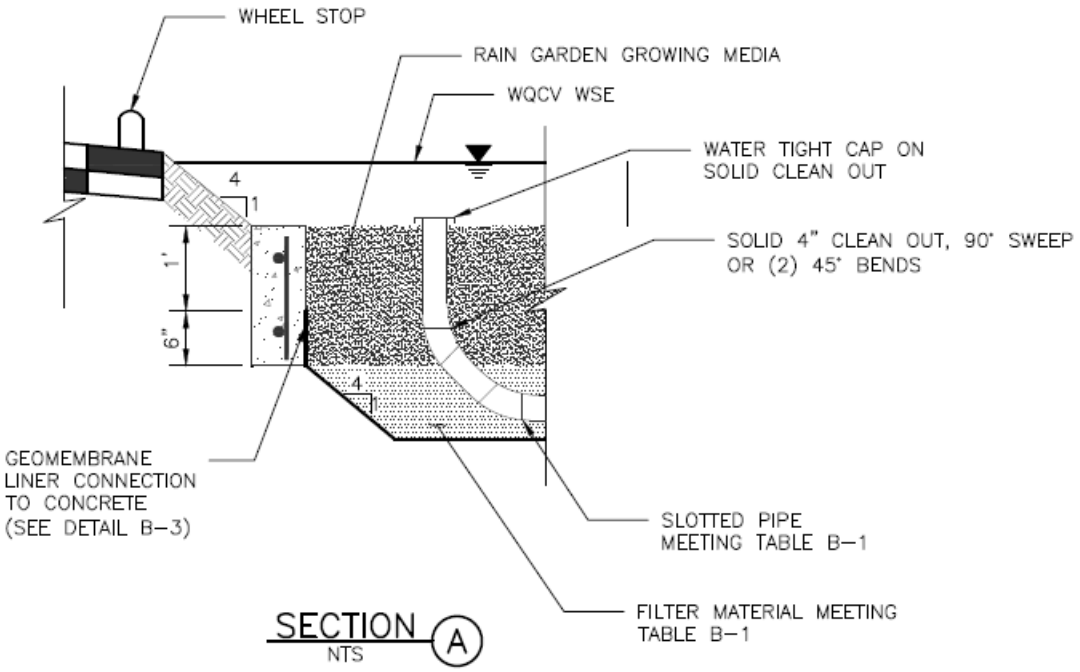

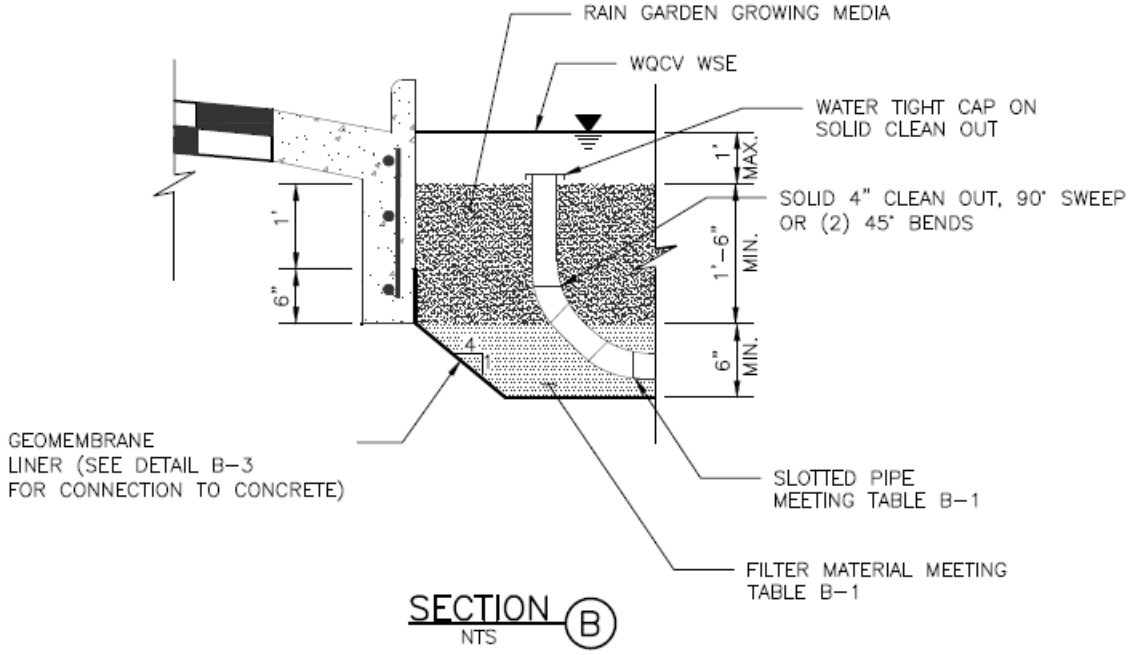

NO-INFILTRATION SECTIONS

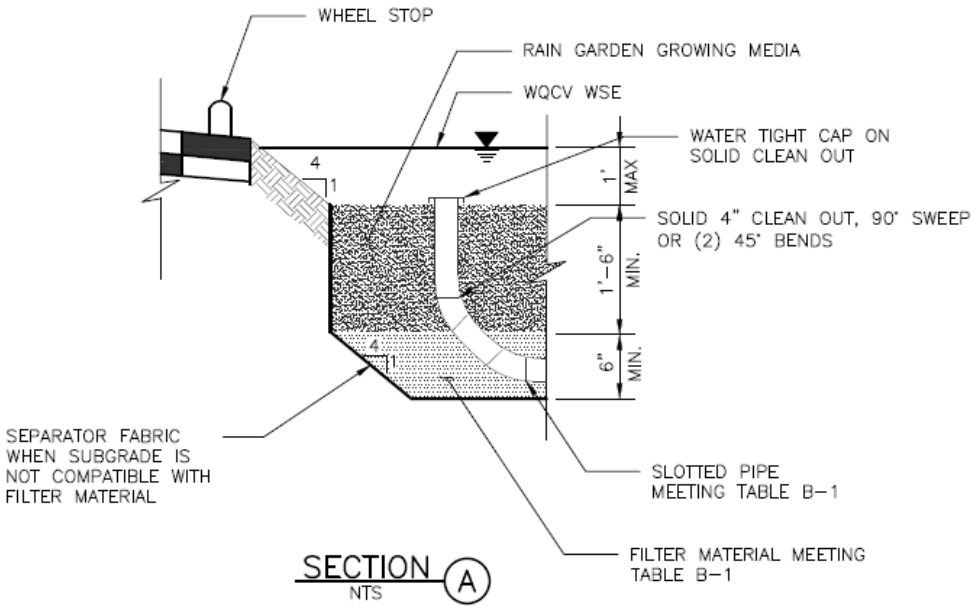

SECTION A
NTS

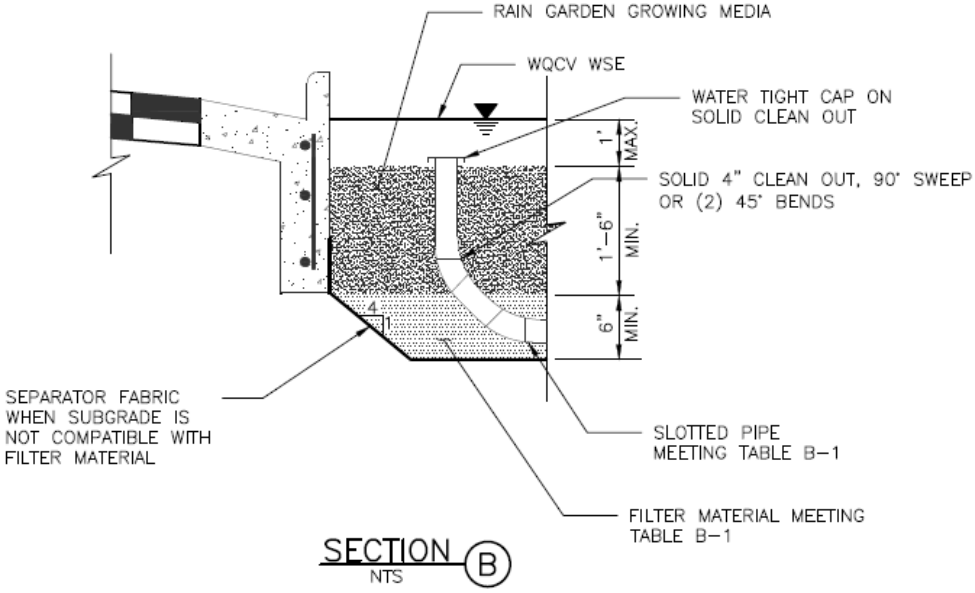

SECTION B
NTS

PARTIAL INFILTRATION SECTIONS

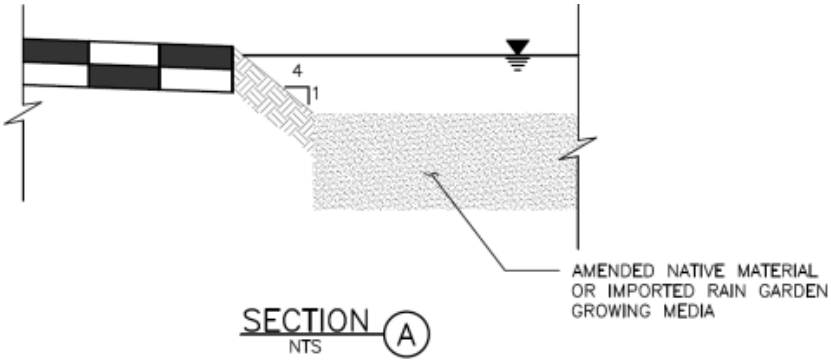

SECTION A
NTS

FULL INFILTRATION SECTION

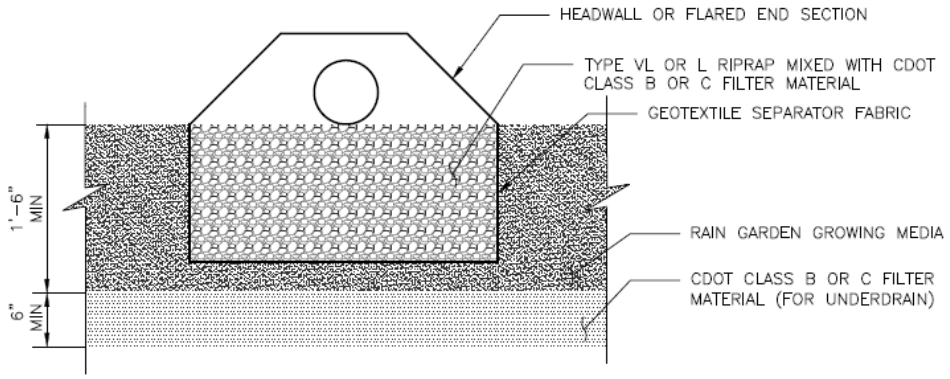

SECTION C
NTS

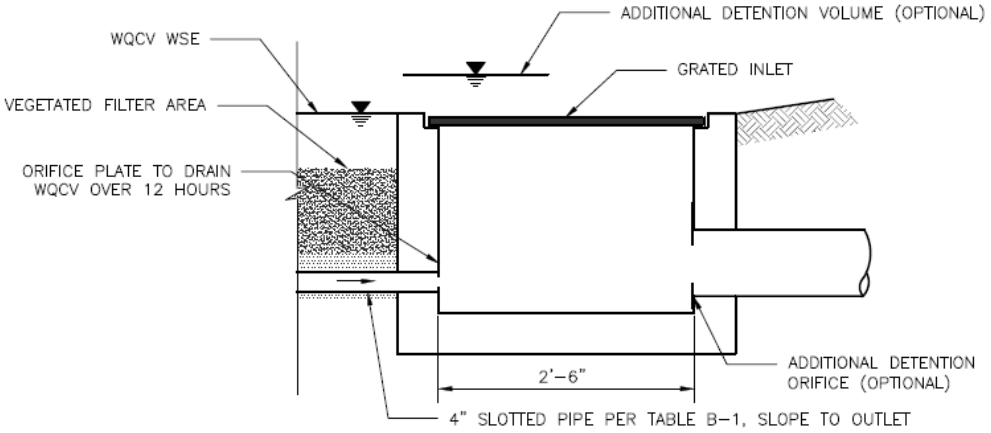

SECTION D
NTS

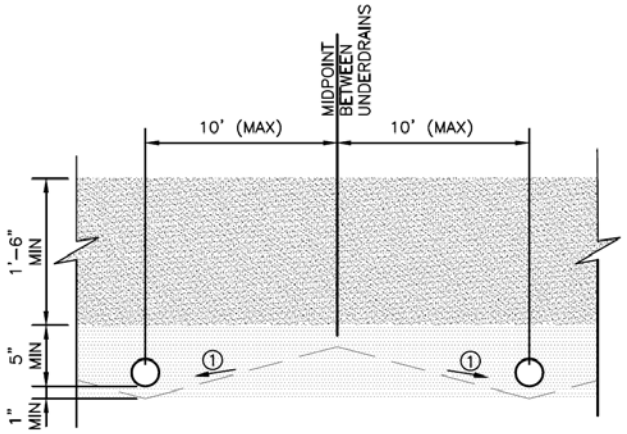

1 SLOPE (STRAIGHT GRADE) SUBGRADE (2-10%) TO UNDERDRAIN TO REDUCE SATURATED SOIL CONDITIONS BETWEEN STORM EVENTS (OPTIONAL)

SECTION E
NTS

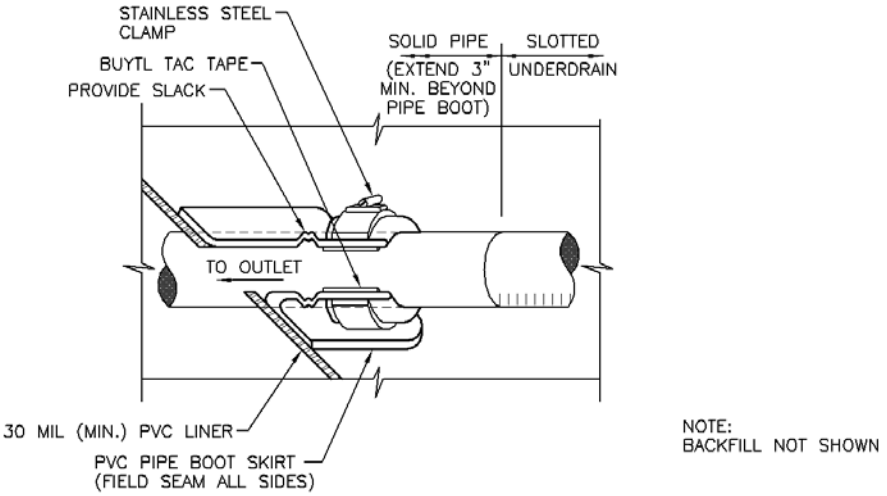

Figure B-2. Geomembrane Liner/Underdrain Penetration Detail

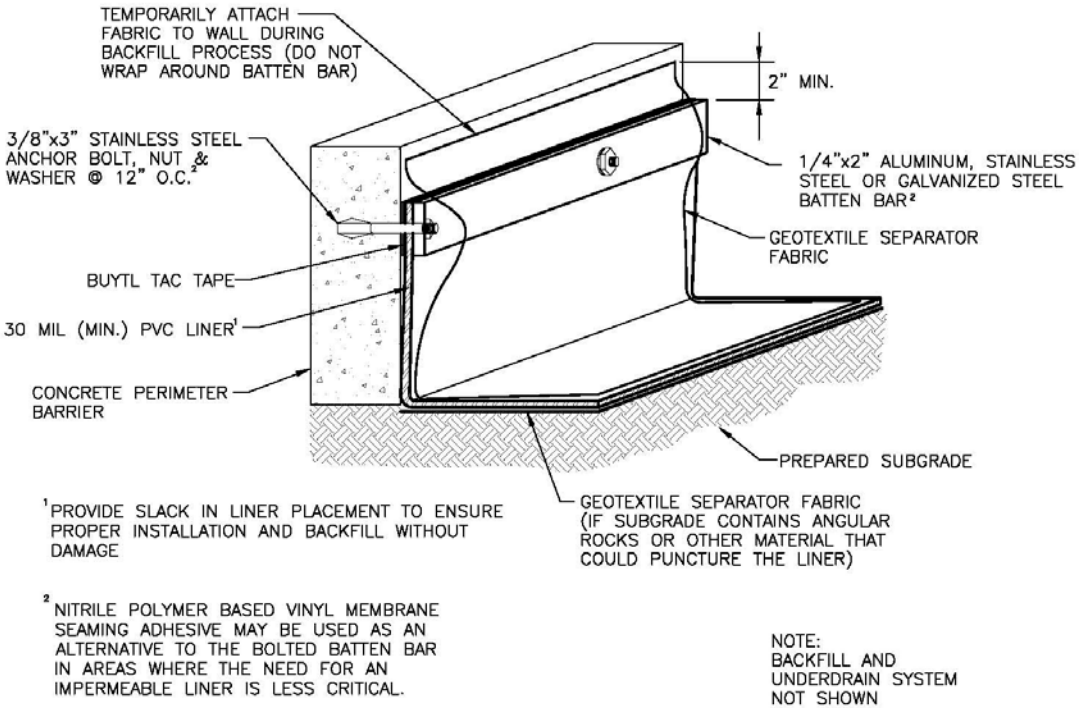

Figure B-3. Geomembrane Liner/Concrete Connection Detail

Construction Considerations

Proper construction of rain gardens involves careful attention to material specifications, final grades, and construction details. For a successful project, implement the following practices:

- Protect area from excessive sediment loading during construction. This is the most common cause of clogging of rain gardens. The portion of the site draining to the rain garden must be stabilized before allowing flow into the rain garden. This includes completion of paving operations.

- Avoid over compaction of the area to preserve infiltration rates (for partial and full infiltration sections).

- Provide construction observation to ensure compliance with design specifications. Improper installation, particularly related to facility dimensions and elevations and underdrain elevations, is a common problem with rain gardens.

Photograph B-3. Inadequate construction staking may have contributed to flows bypassing this rain garden.

- When using an impermeable liner, ensure enough slack in the liner to allow for backfill, compaction, and settling without tearing the liner.

- Provide necessary quality assurance and quality control (QA/QC) when constructing an impermeable geomembrane liner system, including but not limited to fabrication testing, destructive and non-destructive testing of field seams, observation of geomembrane material for tears or other defects, and air lace testing for leaks in all field seams and penetrations. QA/QC should be overseen by a professional engineer. Consider requiring field reports or other documentation from the engineer.

Photograph B-4. Runoff passed the upradient rain garden, shown in Photo B-3, and flooded this downstream rain garden.

- Provide adequate construction staking to ensure that the site properly drains into the facility, particularly with respect to surface drainage away from adjacent buildings. Photo B-3 and Photo B-4 illustrate a construction error for an otherwise correctly designed series of rain gardens.

References

Erickson, Andy. 2009. Field Applications of Enhanced Sand Filtration. University of Minnesota *Stormwater Management Practice Assessment Project Update*. http://wrc.umn.edu.

Hunt, William F., Davis, Allen P., Traver, Robert. G. 2012. "Meeting Hydrologic and Water Quality Goals through Targeted Bioretention Design" *Journal of Environmental Engineering*. (2012) 138:698-707. Print.

HEC-RAS CALCULATIONS

RETREAT AT TIMBERRIDGE FILING NO. 3

SAND CREEK REACH 9 - LOOKING UPSTREAM (EX. 60” CMP AT ARROYA LN.)

SAND CREEK REACH 9 - LOOKING UPSTREAM (AT ARROYA LN.)

Pictures taken Sept. 2022

SAND CREEK REACH 9 – JUST SOUTH OF ARROYA LN. (EX. 60” CMP)

SAND CREEK REACH 9 - LOOKING DOWNSTREAM (JUST SOUTH OF ARROYA LN.)

SAND CREEK REACH 9 - LOOKING UPSTREAM (NEAR STA. 4+00.58)

SAND CREEK REACH 9 - LOOKING DOWNSTREAM (NEAR STA: 4+00.58)

SAND CREEK REACH 9 - LOOKING UPSTREAM (NEAR STA: 3+00.14)

SAND CREEK REACH 9 - LOOKING DOWNSTREAM (NEAR STA: 3+00.14)

SAND CREEK REACH 9 - LOOKING UPSTREAM (NEAR STA: 2+00.22)

SAND CREEK REACH 9 - LOOKING DOWNSTREAM (NEAR STA: 2+00.22)

TABLE 10-1

COMPOSITE ROUGHNESS COEFFICIENTS FOR UNLINED OPEN CHANNELS
(Reference: Chow, Ven Te, 1959; Open-Channel Hydraulics)

$$n = (n_o + n_1 + n_2 + n_3 + n_4)m \qquad (10\text{-}2)$$

	Channel Conditions	Value
Material Type n_o	Earth	0.020
	Fine Gravel	0.024
	Coarse Gravel	0.028
Degree of Irregularity n_1	Smooth	0.000
	Minor	0.005
	Moderate	0.010
	Severe	0.020
Variation of Channel Cross Section n_2	Gradual	0.000
	Alternating Occasionally	0.005
	Alternating Frequently	0.010 - 0.015
Relative Effect of Obstructions n_3	Negligible	0.000
	Minor	0.010 - 0.015
	Appreciable	0.020 - 0.030
	Severe	0.040 - 0.060
Vegetation n_4	Low	0.005 - 0.010
	Medium	0.010 - 0.025
	High	0.025 - 0.050
	Very High	0.050 - 0.100
Degree of Meandering m	Minor	1.000 - 1.200
	Appreciable	1.200 - 1.500
	Severe	1.500

TABLE 10-2 (Continued)

TYPICAL ROUGHNESS COEFFICIENTS FOR OPEN CHANNELS

Type of Channel and Description	Minimum	Normal	Maximum
NATURAL STREAMS			
Minor streams (top width at flood stage 100 ft)			
a. Streams on plain			
1. Clean, straight, full stage, no rifts or deep pools	0.025	0.030	0.033
2. Same as above, but more stones and weeds	0.030	0.035	0.040
3. Clean, winding, some pools and shoals	0.033	0.040	0.045
4. Same as above, but some weeds and stones	0.035	0.045	0.050
5. Same as above, lower stages, more ineffective slopes and sections	0.040	0.048	0.055
6. Same as 4, but more stones	0.045	0.050	0.060
7. Sluggish reaches, weedy, deep pools	0.050	0.070	0.080
8. Very weedy reaches, deep pools, or floodways with heavy stand of timber and underbrush	0.075	0.100	0.150
LINED OR BUILT-UP CHANNELS			
a. Corrugated Metal	0.021	0.025	0.030
b. Concrete			
1. Trowel finish	0.011	0.013	0.015
2. Float finish	0.013	0.015	0.016
3. Finished, with gravel on bottom	0.015	0.017	0.020
4. Unfinished	0.014	0.017	0.020
5. Gunite, good section	0.016	0.019	0.023
6. Gunite, wavy section	0.018	0.022	0.025
7. On good excavated rock	0.017	0.020	
8. On irregular excavated rock	0.022	0.027	

Table 3. Adjustment values for factors that affect roughness of flood plains
[Modified from Aldridge and Garrett, 1973, table 2]

Flood-plain conditions		*n* value adjustment	Example
Degree of irregularity (n_1)	Smooth	0.000	Compares to the smoothest, flattest flood plain attainable in a given bed material.
	Minor	0.001–0.005	Is a flood plain slightly irregular in shape. A few rises and dips or sloughs may be visible on the flood plain.
	Moderate	0.006–0.010	Has more rises and dips. Sloughs and hummocks may occur.
	Severe	0.011–0.020	Flood plain very irregular in shape. Many rises and dips or sloughs are visible. Irregular ground surfaces in pastureland and furrows perpendicular to the flow are also included.
Variation of flood-plain cross section (n_2)		0.0	Not applicable.
Effect of obstructions (n_3)	Negligible	0.000–0.004	Few scattered obstructions, which include debris deposits, stumps, exposed roots, logs, or isolated boulders, occupy less than 5 percent of the cross-sectional area.
	Minor	0.005–0.019	Obstructions occupy less than 15 percent of the cross-sectional area.
	Appreciable	0.020–0.030	Obstructions occupy from 15 to 50 percent of the cross-sectional area.
Amount of vegetation (n_4)	Small	0.001–0.010	Dense growth of flexible turf grass, such as Bermuda, or weeds growing where the average depth of flow is at least two times the height of the vegetation, or supple tree seedlings such as willow, cottonwood, arrowweed, or saltcedar growing where the average depth of flow is at least three times the height of the vegetation.
	Medium	0.011–0.025	Turf grass growing where the average depth of flow is from one to two times the height of the vegetation, or moderately dense stemmy grass, weeds, or tree seedlings growing where the average depth of flow is from two to three times the height of the vegetation; brushy, moderately dense vegetation, similar to 1- to 2-year-old willow trees in the dormant season.
	Large	0.025–0.050	Turf grass growing where the average depth of flow is about equal to the height of the vegetation, or 8- to 10-year-old willow or cottonwood trees intergrown with some weeds and brush (none of the vegetation in foliage) where the hydraulic radius exceeds 2 ft, or mature row crops such as small vegetables, or mature field crops where depth of flow is at least twice the height of the vegetation.
	Very large	0.050–0.100	Turf grass growing where the average depth of flow is less than half the height of the vegetation, or moderate to dense brush, or heavy stand of timber with few down trees and little undergrowth where depth of flow is below branches, or mature field crops where depth of flow is less than the height of the vegetation.
	Extreme	0.100–0.200	Dense bushy willow, mesquite, and saltcedar (all vegetation in full foliage), or heavy stand of timber, few down trees, depth of flow reaching branches.
Degree of meander (m)		1.0	Not applicable.

Chow (1959) presents a table showing minimum, normal, and maximum values of n for flood plains covered by pasture and crops. These values are helpful for comparing the roughness values of flood plains having similar vegetation.

Vegetation-Density Method

For a wooded flood plain, the vegetation-density method can be used as an alternative to the previous method for determining n values for flood plains. In a wooded flood plain, where the tree diameters can be measured, the vegetation density of the flood plain can be determined.

Determining the vegetation density is an effective way of relating plant height and density characteristics, as a function of depth of flow, to the flow resistance of vegetation. Application of the flow-resistance model presented below requires an estimate of the vegetation density as a function of depth of flow. The procedure requires a direct or indirect determination of vegetation density at a given depth. If the change in n value through a range in depth is required, then an estimation of vegetation density through that range is necessary.

Techniques for Determining Vegetation Density

Petryk and Bosmajian (1975) developed a method of analysis of the vegetation density to determine the rough-

Classification of Vegetal Covers

Retardance Class	Cover	Condition
A	Weeping lovegrass	Excellent stand, tall, average 30 in.
	Yellow bluestem Ischaemum	Excellent stand, tall, average 36 in.
B	Bermuda grass	Good stand, tall, average 12 in.
	Native grass mixture (little bluestem, bluestem, blue gamma, and other long and short Midwest grasses	Good stand, unmowed
	Weeping lovegrass	Good stand, tall, average 24 in.
	Lespedeza serica	Good stand, not woody, tall, average 19 in.
	Alfalfa	Good stand uncut, average 11 in.
	Weeping lovegrass	Good stand, unmowed, average 13 in.
	Kudzu	Dense growth, uncut
	Blue gamma	Good stand, uncut, average 13 in.
C	Crabgrass	Fair stand, uncut, avg. 10 in.
	Bermuda grass	Good stand, mowed, average 6 in.
	Common lespedeza	Good stand, uncut, average 11 in.
	Grass-legume mixture - summer (orchard grass, redtop Italian ryegrass, and common lespedeza)	Good stand, uncut, average 6 to 8 in.
	Centipedegrass	Very dense cover, average 6 in.
	Kentucky Bluegrass	Good stand, headed, 6 to 12 in.
D	Bermuda grass	Good stand, cut to 2.5 in. height
	Common lespedeza	Excellent stand, uncut, average 4.5 in.
	Buffalo Grass	Good stand, uncut, 3 t 6 in.
	Grass-legume mixture - fall (orchard grass, redtop Italian ryegrass, and common lespedeza)	Good stand, uncut, 3 to 5 in.
	Lespedeza serica	After cutting to 2 in. height, good stand before cutting
E	Bermuda grass	Good stand, cut to average 1.5 in. height
	Bermuda grass	Burned stubble
Note: Covers classified have been tested in experimental channels. Covers were green and generally uniform.		
Source: HEC-15		

Coefficients for Roughness of Grass-Lined Channels

SCS Retardance Class	C_n
A	0.605
B	0.418
C	0.220
D	0.147
E	0.093

Source: HEC-15

Composite Roughness

Culverts using different materials for portions of the perimeter such as embedded culverts or culverts with an invert liner should use a composite Manning's n value. A weighted n value based on the materials can be derived using the following equation:

$$n_c = \left[\frac{\Sigma(p_i n_i^{1.5})}{p}\right]^{0.67}$$

Where:
n_c = Composite/weighted Manning's n.
p_i = Wetted perimeter for the material, ft.
n_i = Manning's n value for the material.
p = Total wetted perimeter, ft.

750.1.4.1.2 Hydraulic Radius

The hydraulic radius is a characteristic depth of flow and is defined as the cross-sectional area of flow divided by the wetted perimeter of the channel. The hydraulic radius is computed as follows:

$$R = \frac{A}{P}$$

where:

R = hydraulic radius, ft
A = cross-sectional area of flow, ft^2
P = wetted perimeter of the channel cross section, ft

750.1.4.1.3 Slope

Table 8–8 Characteristics of selected grass species for use in channels and waterways

Grass species	Height at maturity (ft)	Height at maturity (m)
Cool-season grasses		
Creeping foxtail	3–4	0.9–1.2
Crested wheatgrass	2–3	0.6–0.9
Green needlegrass	3–4	0.9–1.2
Russian wild rye	3–4	0.9–1.2
Smooth bromegrass	3–4	0.9–1.2
Tall fescue	3–4	0.9–1.2
Tall wheatgrass		1.2–1.5
Western wheatgrass	2–3	0.6–0.9
Warm-season grasses		
Bermudagrass	3/4–2	0.2–0.6
Big bluestem	4–6	1.2–1.8
Blue grama	1–2	0.3–0.6
Buffalograss	1/3–1	0.1–0.3
Green spangletop	3–4	0.9–1.2
Indiangrass	5–6	1.5–1.8
Klein grass	3–4	0.9–1.2
Little bluestem	3–4	0.9–1.2
Plains bristlegrass	1–2	0.3–0.6
Sand bluestem	5–6	1.5–1.8
Sideoats grama	2–3	0.6–0.9
Switchgrass	4–5	1.2–1.5
Vine mesquitegrass	1–2	0.3–0.6
Weeping lovegrass	3–4	0.9–1.2
Old World bluestems		
Caucasian bluestem	4–5	1.2–1.5
Ganada yellow bluestem	3–4	0.9–1.2

Table 8–9 Retardance curve index by SCS retardance class

SCS retardance class	Retardance curve index
A	10.0
B	7.64
C	5.60
D	4.44
E	2.88

this table were obtained from a review of the available qualitative descriptions and stem counts reported by researchers studying channel resistance and stability.

Since cover conditions vary from year to year and season to season, it is recommended that an upper and lower bound be determined for C_I. The lower bound should be used in stability computations, and the upper bound should be used to determine channel capacity. Some practitioners find that the use of SCS retardance class (table 8–9) is a preferable approach.

The vegetal cover index, C_F, depends primarily on the density and uniformity of density in the immediate vicinity of the soil boundary. Because this parameter is associated with the prevention of local erosion damage which may lead to channel unraveling, the cover factor should represent the weakest area in a reach, rather than the average for the cover species. Recommended values for the cover factor are presented in table 8–10. Values in this table do not account for such considerations as maintenance practices or uniformity of soil fertility or moisture. Therefore, appropriate engineering judgment should be used in its application.

Table 8–10 Properties of grass channel linings values (apply to good uniform stands of each cover)

Cover factor (C_F)	Covers tested	Reference stem density (stems/ft²)	Reference stem density (stems/m²)
0.90	Bermudagrass	500	5,380
	Centipede grass	500	5,380
0.87	Buffalograss	400	4,300
	Kentucky bluegrass	350	3,770
	Blue grama	350	3,770
0.75	Grass mixture	200	2,150
0.50	Weeping lovegrass	350	3,770
	Yellow bluestem	250	2,690
0.50	Alfalfa	500	5,380
	Lespedeza sericea	300	3,280
0.50	Common lespedeza	150	1,610
	Sudangrass	50	538

Multiply the stem densities given by 1/3, 2/3, 1, 4/3, and 5/3 for poor, fair, good, very good, and excellent covers, respectively. Reduce the C_F by 20% for fair stands and 50% for poor stands.

Two soil parameters are required for application of effective stress concepts to the stability design of lined or unlined channels having an erodible soil boundary: soil grain roughness, n_s, and allowable effective stress, τ_a. When the effective stress approach is used, the soil parameters are the same for both lined and unlined channels with negligible bed-material sediment transport.

Soil grain roughness is defined as the roughness associated with particles or aggregates of a size that can be independently moved by the flow at incipient channel failure. For noncohesive soils, the soil grain roughness and effective shear stress are both a function of the D_{75} grain size. When D_{75} is greater than 1.3 millimeter, the soil is considered coarse grained. When D_{75} is less than 1.3 millimeter, the soil is considered fine grained. Fine-grained roughness is considered to have a constant value of 0.0156. Fine-grained effective shear stress is taken to have a constant value of 0.02 pound per square foot. Coarse-grained shear stress and roughness are given in figures 8–21 and 8–22.

A soil grain roughness of 0.0156 is assigned to all cohesive soils. The allowable effective stresses are a function of the unified soil classification system soil type, the plasticity index, and the void ratio. The basic allowable shear stress, τ_{ab}, is determined from the plasticity index and soil classification, and then adjusted by the void ratio correction factor, C_e, using the following equation:

$$\tau_a = \tau_{ab} C_e^2 \qquad \text{(eq. 8–29)}$$

The basic allowable effective stress can be determined from figure 8–23 and the void ratio correction factor from figure 8–24. These two figures were developed directly from the allowable velocity curves in AH 667. Stress partitioning (slope partitioning) is essential to application of figures 8–21 to 8–24, with or without vegetation (Temple et al. 1987).

(e) General design procedure

Use the basic shear stress equation to determine effective shear stress on the soil beneath the vegetation. Use any consistent units of measurement.

$$\tau_e = \gamma d S (1 - C_F) \left(\frac{n_s}{n} \right)^2 \qquad \text{(eq. 8–30)}$$

where:

τ_e = effective shear stress exerted on the soil beneath vegetation (lb/ft^2 or N/m^2)
γ = specific weight of water (lb/ft^3 or N/m^3)
d = maximum depth of flow in the cross section (ft or m)
S = energy slope, dimensionless
C_F = vegetation cover factor (0 for unlined channel), dimensionless
n_s = grain roughness of underlying soil, typically taken as dimensionless
n = roughness coefficient of vegetation, typically taken as dimensionless

The flow depth is used instead of the hydraulic radius because this will result in the maximum local shear stress, rather than the average shear stress. The cover factor is a function of the grass and stem density. Roughness coefficients are standard Manning's roughness values; n_s can be determined from figure 8–22, n can be determined from the old SCS curves (fig. 8–20) or from the following equation.

$$n_R = \exp\left\{ C_I \left[0.0133 (\ln R_v)^2 - 0.0954 \ln R_v + 0.297 \right] - 4.16 \right\} \qquad \text{(eq. 8–31)}$$

where:

R_v = (VR/v) x 10^{-5} (this dimensionless term reduces to VR for practical application in English units)
V = channel velocity (ft/s or m/s)
R = hydraulic radius (ft or m)

Limited to $0.0025 C_I^{2.5} < R_v < 36$

A reference value of Manning's resistance coefficient, n_R, is applicable to vegetation established on relatively smoothly graded fine-grained soil.

If vegetated channel liner mats are used, manufacturer-supplied roughness coefficients for particular mats may be used in the equation.

Maximum allowable shear stress, τ_{va}, in pound per square foot is determined as a function of the retardance curve index, C_I. Very little information is available for vegetal performance under very high stresses and this relation is believed to be conservative.

$$\tau_{va} = 0.75 C_I \qquad \text{(eq. 8–32)}$$

8.1 Riprap Sizing

Procedures for sizing rock to be used in soil riprap, void-filled riprap, and riprap over bedding are the same.

8.1.1 Mild Slope Conditions

When subcritical flow conditions occur and/or slopes are mild (less than 2 percent), UDFCD recommends the following equation (Hughes, et al, 1983):

$$d_{50} \geq \left[\frac{VS^{0.17}}{4.5(G_s - 1)^{0.66}} \right]^2 \qquad \text{Equation 8-11}$$

Where:

V = mean channel velocity (ft/sec)

S = longitudinal channel slope (ft/ft)

d_{50} = mean rock size (ft)

Gs = specific gravity of stone (minimum = 2.50, typically 2.5 to 2.7), Note: In this equation (Gs -1) considers the buoyancy of the water, in that the specific gravity of water is subtracted from the specific gravity of the rock.

Note that Equation 8-11 is applicable for sizing riprap for channel lining with a longitudinal slope of no more than 2%. This equation is not intended for use in sizing riprap for steep slopes (typically in excess of 2 percent), rundowns, or protection downstream of culverts. Information on rundowns is provided in Section 7.0 of the *Hydraulic Structures* chapter of the USDCM, and protection downstream of culverts is discussed in the *Culverts and Bridges* chapter. For channel slopes greater than 2% use one of the methods presented in 8.1.2.

Rock size does not need to be increased for steeper channel side slopes, provided the side slopes are no steeper than 2.5H:1V (UDFCD 1982). Channel side slopes steeper than 2.5H:1V are not recommended because of stability, safety, and maintenance considerations. See Figure 8-34 for riprap placement specifications. At the upstream and downstream termination of a riprap lining, the thickness should be increased 50% for at least 3 feet to prevent undercutting.

8.1.2 Steep Slope Conditions

Steep slope rock sizing equations are used for applications where the slope is greater than 2 percent and/or flows are in the supercritical flow regime. The following rock sizing equations may be referred to for riprap design analysis on steep slopes:

- CSU Equation, *Development of Riprap Design Criteria by Riprap Testing in Flumes: Phase II* (prepared by S.R. Abt, et al, Colorado State University, 1988). This method was developed for steep slopes from 2 to 20 percent.

- USDA- Agricultural Research Service Equations, *Design of Rock Chutes* (by K.M. Robinson, et al, USDA- ARS, 1998 Transactions of ASAE) and *An Excel Program to Design Rock Chutes for Grade*

CLASSIC CONSULTING ENGINEERS & SURVEYORS
619 N. Cascade Avenue, Suite 200
Colorado Springs, CO 80903

Project: Timber Ridge 3
Date: 12/16/22
Contact:
Phone:
By: MAW

NOTES
- ❑ Telephone Record
- ❑ Note to the File
- ❑ Job Information
- ❑ Meeting Minutes
- ❑

Rip-rap sizing for channel stabilization:

- mild slope condition
- use equation 8-11 for MHFD

$$d_{50} \geq \left(\frac{V S^{0.17}}{4.5 (G_s - 1)^{0.66}} \right)^2$$

mean velocity = V = 4.2 ft/s. (Obtained from HEC-RAS Model)

longitudinal slope = S = 1.58%

G_s specific gravity of stone = G_s = 2.5

$$d_{50} \geq \left(\frac{4.2 (0.0158)^{0.17}}{4.5 (2.5 - 1)^{0.66}} \right)^2 = 0.12 \text{ ft.}$$

d_{50} min. = 6"

$\boxed{\text{use } d_{50} = 9'' \text{ type L}}$

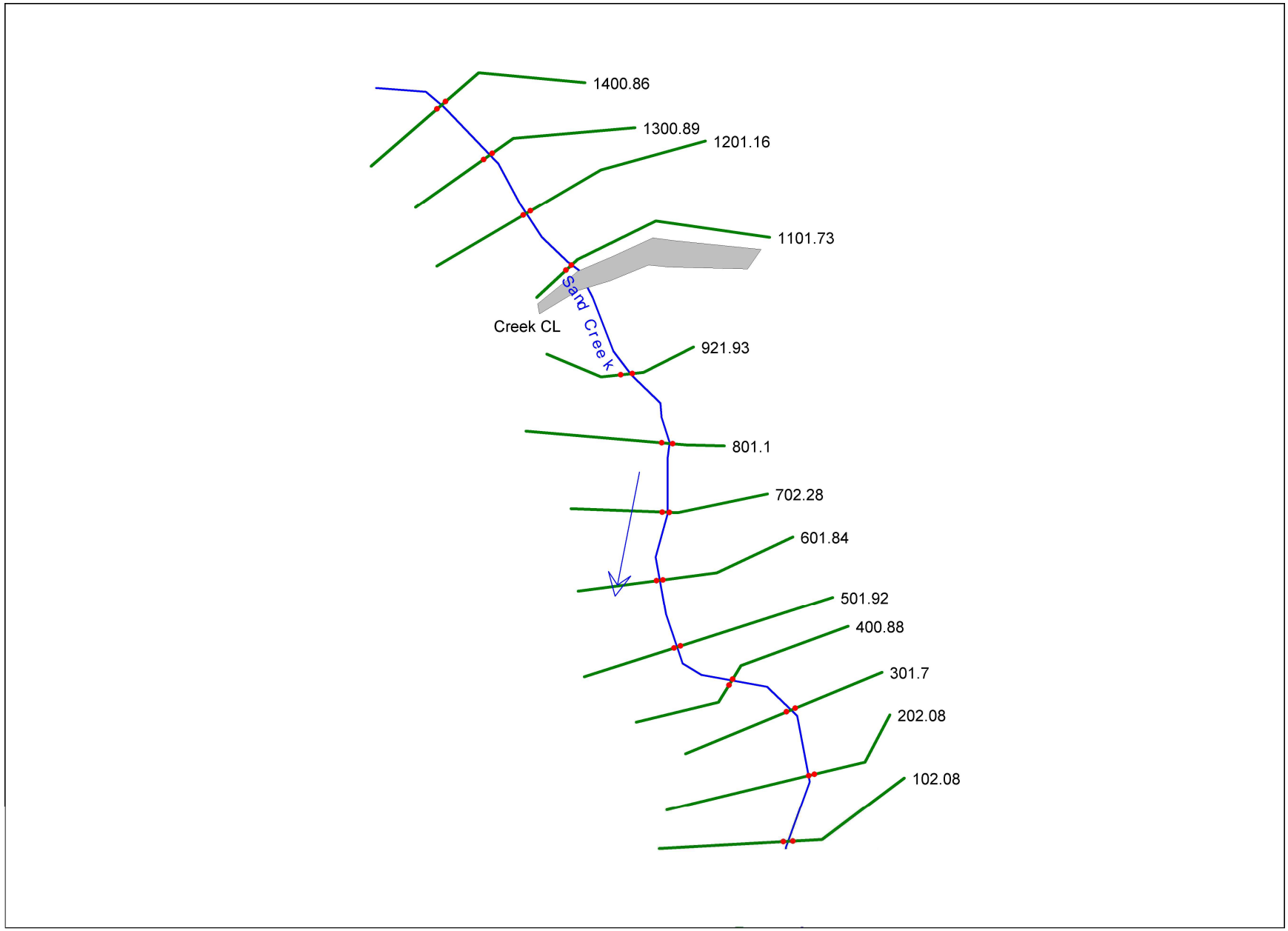
1400.86
1300.89
1201.16
1101.73
Sand Creek
Creek CL
921.93
801.1
702.28
601.84
501.92
400.88
301.7
202.08
102.08

HEC-RAS Model (Ver. 6.3.1) Input Data

<u>Input based on the following:</u>

Table 10-1 & 10-2 from DCM

Table 3 from USGS Guide for selecting Manning's Roughness Coefficients

Site visits and photographic documentation of the channel

Classification of Vegetal covers from HEC-15

SCS Retardance Class form HEC-15

Flows based on current approved Sand Creek DBPS, FEMA and SR MDDP

Manning's n Values:	0.12 overbank
	0.07 channel

Standard Channel coefficients:	Contraction 0.1
	Expansion 0.3

Flows modeled:	FEMA 100-yr	2600 cfs
	DBPS 100-yr	2170 cfs
	SR MDDP 100-yr	1468 cfs
	DBPS 10-yr	630 cfs
	SR MDDP 10-yr	581 cfs

HEC-RAS Plan: Plan 01 River: Sand Creek Reach: Creek CL

Reach	River Sta	Profile	Q Total	Min Ch El	W.S. Elev	Crit W.S.	Max Chl Dpth	Hydr Radius	E.G. Elev	E.G. Slope	Vel Total	Shear Total	Flow Area	Top Width	Froude # XS
			(cfs)	(ft)	(ft)	(ft)	(ft)	(ft)	(ft)	(ft/ft)	(ft/s)	(lb/sq ft)	(sq ft)	(ft)	
Creek CL	1400.86	FEMA	2600.00	7235.97	7244.76		8.87	7.68	7244.80	0.000722	1.38	0.35	1886.47	241.25	0.09
Creek CL	1400.86	DBPS 100-yr.	2170.00	7235.97	7243.39		7.50	6.51	7243.42	0.000918	1.39	0.37	1558.68	235.67	0.10
Creek CL	1400.86	SR MDDP 100-yr.	1468.00	7235.97	7240.83		4.94	4.26	7240.87	0.001909	1.51	0.51	969.07	225.15	0.14
Creek CL	1400.86	DBPS 10-yr.	630.00	7235.97	7238.39		2.50	2.00	7238.43	0.004763	1.46	0.59	432.13	215.16	0.20
Creek CL	1400.86	SR MDDP 10-yr.	581.00	7235.97	7238.24		2.35	1.85	7238.28	0.005206	1.45	0.60	399.92	214.56	0.21
Creek CL	1300.89	FEMA	2600.00	7234.78	7244.55		10.55	4.71	7244.67	0.002272	1.93	0.67	1347.91	283.17	0.22
Creek CL	1300.89	DBPS 100-yr.	2170.00	7234.78	7243.21		9.21	6.57	7243.29	0.001713	2.00	0.70	1084.31	162.80	0.16
Creek CL	1300.89	SR MDDP 100-yr.	1468.00	7234.78	7240.53		6.53	4.81	7240.63	0.003020	2.16	0.91	679.36	139.51	0.20
Creek CL	1300.89	DBPS 10-yr.	630.00	7234.78	7237.92		3.92	2.94	7237.98	0.004209	1.83	0.77	345.04	116.32	0.20
Creek CL	1300.89	SR MDDP 10-yr.	581.00	7234.78	7237.75		3.75	2.79	7237.81	0.004316	1.79	0.75	325.08	115.36	0.20
Creek CL	1201.16	FEMA	2600.00	7233.95	7244.25		10.30	3.85	7244.41	0.002920	2.07	0.70	1253.97	322.68	0.29
Creek CL	1201.16	DBPS 100-yr.	2170.00	7233.95	7242.91		8.96	5.09	7243.06	0.003106	2.34	0.99	925.81	179.16	0.24
Creek CL	1201.16	SR MDDP 100-yr.	1468.00	7233.95	7240.14		6.18	5.12	7240.27	0.004057	2.60	1.30	564.50	108.08	0.23
Creek CL	1201.16	DBPS 10-yr.	630.00	7233.95	7237.40		3.45	3.06	7237.49	0.005593	2.17	1.07	290.06	93.44	0.24
Creek CL	1201.16	SR MDDP 10-yr.	581.00	7233.95	7237.22		3.27	2.91	7237.31	0.005734	2.13	1.04	273.08	92.53	0.25
Creek CL	1101.73	FEMA	2600.00	7232.23	7242.68	7238.62	10.45	10.33	7243.81	0.011020	7.62	7.11	341.09	135.88	0.47
Creek CL	1101.73	DBPS 100-yr.	2170.00	7232.23	7241.42	7237.89	9.19	9.07	7242.44	0.011851	7.25	6.71	299.36	96.42	0.47
Creek CL	1101.73	SR MDDP 100-yr.	1468.00	7232.23	7238.31	7236.62	6.08	5.97	7239.39	0.021835	7.45	8.13	196.92	88.24	0.60
Creek CL	1101.73	DBPS 10-yr.	630.00	7232.23	7234.78	7234.78	2.55	2.44	7236.00	0.078460	7.83	11.93	80.41	78.93	1.00
Creek CL	1101.73	SR MDDP 10-yr.	581.00	7232.23	7234.68	7234.68	2.45	2.33	7235.81	0.077299	7.55	11.24	76.91	78.65	0.98
Creek CL	1004		Culvert												
Creek CL	921.93	FEMA	2600.00	7230.92	7237.04	7237.04	6.12	6.04	7240.06	0.052481	12.66	19.79	205.40	101.28	1.00
Creek CL	921.93	DBPS 100-yr.	2170.00	7230.92	7236.38	7236.38	5.46	5.38	7239.03	0.053777	11.86	18.06	182.96	100.99	0.99
Creek CL	921.93	SR MDDP 100-yr.	1468.00	7230.92	7235.15	7235.15	4.23	4.15	7237.19	0.058423	10.40	15.14	141.19	98.12	0.99
Creek CL	921.93	DBPS 10-yr.	630.00	7230.92	7233.36	7233.36	2.44	2.36	7234.52	0.070760	7.85	10.43	80.29	91.70	0.99
Creek CL	921.93	SR MDDP 10-yr.	581.00	7230.92	7233.24	7233.24	2.32	2.24	7234.33	0.071638	7.62	10.02	76.21	90.95	0.99
Creek CL	801.1	FEMA	2600.00	7226.00	7232.81		6.81	4.40	7233.21	0.010288	3.97	2.83	655.02	146.93	0.42
Creek CL	801.1	DBPS 100-yr.	2170.00	7226.00	7232.27		6.27	4.02	7232.63	0.010344	3.76	2.60	576.68	141.67	0.42
Creek CL	801.1	SR MDDP 100-yr.	1468.00	7226.00	7231.27		5.27	3.22	7231.57	0.010538	3.35	2.12	438.72	134.87	0.43
Creek CL	801.1	DBPS 10-yr.	630.00	7226.00	7229.72		3.72	1.91	7229.95	0.010921	2.65	1.30	237.33	123.27	0.49
Creek CL	801.1	SR MDDP 10-yr.	581.00	7226.00	7229.61		3.61	1.83	7229.83	0.010877	2.60	1.24	223.41	121.51	0.49
Creek CL	702.28	FEMA	2600.00	7225.93	7231.54		5.60	4.27	7231.96	0.015564	4.55	4.15	571.27	132.13	0.45
Creek CL	702.28	DBPS 100-yr.	2170.00	7225.93	7230.97		5.04	3.89	7231.36	0.016116	4.35	3.91	498.38	126.81	0.45
Creek CL	702.28	SR MDDP 100-yr.	1468.00	7225.93	7229.93		4.00	3.15	7230.25	0.017513	3.96	3.45	371.10	116.69	0.45
Creek CL	702.28	DBPS 10-yr.	630.00	7225.93	7228.28		2.34	2.05	7228.48	0.021117	3.21	2.71	196.19	94.86	0.44
Creek CL	702.28	SR MDDP 10-yr.	581.00	7225.93	7228.15		2.22	1.97	7228.34	0.021572	3.15	2.65	184.67	93.34	0.44
Creek CL	601.84	FEMA	2600.00	7223.93	7230.57		6.65	4.62	7230.80	0.008293	3.37	2.39	772.26	165.36	0.32
Creek CL	601.84	DBPS 100-yr.	2170.00	7223.93	7229.94		6.02	4.18	7230.16	0.008719	3.24	2.28	670.44	158.93	0.32
Creek CL	601.84	SR MDDP 100-yr.	1468.00	7223.93	7228.80		4.88	3.49	7228.98	0.009075	2.94	1.98	499.28	141.84	0.32
Creek CL	601.84	DBPS 10-yr.	630.00	7223.93	7226.96		3.04	2.38	7227.07	0.009722	2.37	1.45	265.56	110.79	0.31
Creek CL	601.84	SR MDDP 10-yr.	581.00	7223.93	7226.82		2.90	2.30	7226.93	0.009731	2.32	1.40	250.58	108.34	0.30
Creek CL	501.92	FEMA	2600.00	7223.54	7229.99		6.97	5.40	7230.14	0.005104	2.89	1.72	898.54	164.00	0.24

HEC-RAS Plan: Plan 01 River: Sand Creek Reach: Creek CL (Continued)

Reach	River Sta	Profile	Q Total	Min Ch El	W.S. Elev	Crit W.S.	Max Chl Dpth	Hydr Radius	E.G. Elev	E.G. Slope	Vel Total	Shear Total	Flow Area	Top Width	Froude # XS
			(cfs)	(ft)	(ft)	(ft)	(ft)	(ft)	(ft)	(ft/ft)	(ft/s)	(lb/sq ft)	(sq ft)	(ft)	
Creek CL	501.92	DBPS 100-yr.	2170.00	7223.54	7229.35		6.32	4.93	7229.48	0.005147	2.73	1.58	794.54	159.21	0.23
Creek CL	501.92	SR MDDP 100-yr.	1468.00	7223.54	7228.20		5.18	4.05	7228.30	0.005083	2.38	1.29	616.68	150.50	0.22
Creek CL	501.92	DBPS 10-yr.	630.00	7223.54	7226.29		3.27	2.58	7226.35	0.005489	1.82	0.88	345.84	133.28	0.21
Creek CL	501.92	SR MDDP 10-yr.	581.00	7223.54	7226.14		3.12	2.46	7226.20	0.005589	1.78	0.86	326.35	131.90	0.21
Creek CL	400.88	FEMA	2600.00	7222.00	7229.36		7.37	4.58	7229.59	0.006323	3.15	1.81	826.28	179.06	0.31
Creek CL	400.88	DBPS 100-yr.	2170.00	7222.00	7228.72		6.73	4.40	7228.92	0.006266	3.02	1.72	717.58	161.79	0.30
Creek CL	400.88	SR MDDP 100-yr.	1468.00	7222.00	7227.63		5.64	4.02	7227.78	0.005561	2.64	1.39	555.95	137.12	0.27
Creek CL	400.88	DBPS 10-yr.	630.00	7222.00	7225.82		3.83	3.18	7225.89	0.004024	1.87	0.80	336.50	104.72	0.21
Creek CL	400.88	SR MDDP 10-yr.	581.00	7222.00	7225.68		3.69	3.08	7225.75	0.003904	1.81	0.75	321.81	103.44	0.20
Creek CL	301.7	FEMA	2600.00	7221.95	7228.35		6.40	3.88	7228.73	0.012087	3.85	2.92	675.98	172.77	0.44
Creek CL	301.7	DBPS 100-yr.	2170.00	7221.95	7227.72		5.77	3.72	7228.07	0.012322	3.78	2.86	574.64	152.79	0.43
Creek CL	301.7	SR MDDP 100-yr.	1468.00	7221.95	7226.64		4.69	3.04	7226.95	0.013532	3.50	2.56	419.10	136.83	0.45
Creek CL	301.7	DBPS 10-yr.	630.00	7221.95	7224.94		2.99	1.97	7225.17	0.016340	2.99	2.01	210.87	106.06	0.48
Creek CL	301.7	SR MDDP 10-yr.	581.00	7221.95	7224.81		2.86	1.89	7225.04	0.016744	2.95	1.97	197.05	103.56	0.49
Creek CL	202.08	FEMA	2600.00	7219.99	7227.28		7.29	3.97	7227.57	0.010963	3.59	2.72	724.44	180.72	0.38
Creek CL	202.08	DBPS 100-yr.	2170.00	7219.99	7226.72		6.73	4.09	7226.96	0.009730	3.44	2.49	631.06	152.61	0.34
Creek CL	202.08	SR MDDP 100-yr.	1468.00	7219.99	7225.70		5.71	3.77	7225.87	0.008428	3.00	1.98	489.56	128.58	0.31
Creek CL	202.08	DBPS 10-yr.	630.00	7219.99	7224.00		4.01	2.59	7224.09	0.007364	2.19	1.19	287.09	109.93	0.27
Creek CL	202.08	SR MDDP 10-yr.	581.00	7219.99	7223.86		3.87	2.50	7223.95	0.007292	2.13	1.14	272.30	108.00	0.27
Creek CL	102.08	FEMA	2600.00	7219.90	7225.49	7224.11	5.86	3.56	7226.09	0.020679	4.87	4.60	533.36	148.98	0.58
Creek CL	102.08	DBPS 100-yr.	2170.00	7219.90	7225.07	7223.65	5.44	3.33	7225.60	0.019986	4.60	4.15	471.98	141.04	0.56
Creek CL	102.08	SR MDDP 100-yr.	1468.00	7219.90	7224.26	7222.87	4.63	2.89	7224.67	0.018369	4.03	3.31	364.38	125.65	0.53
Creek CL	102.08	DBPS 10-yr.	630.00	7219.90	7222.83		3.20	2.12	7223.05	0.015837	3.08	2.10	204.78	95.97	0.46
Creek CL	102.08	SR MDDP 10-yr.	581.00	7219.90	7222.72		3.09	2.07	7222.93	0.015543	2.99	2.01	194.19	93.51	0.45
Creek CL	0	FEMA	2600.00	7217.31	7221.19	7221.19	4.58	2.55	7222.54	0.067089	7.46	10.67	348.63	135.53	1.02
Creek CL	0	DBPS 100-yr.	2170.00	7217.31	7220.81	7220.81	4.20	2.33	7222.07	0.070043	7.25	10.19	299.34	127.22	1.03
Creek CL	0	SR MDDP 100-yr.	1468.00	7217.31	7220.05	7220.05	3.44	1.96	7221.15	0.081749	7.00	9.98	209.84	106.31	1.06
Creek CL	0	DBPS 10-yr.	630.00	7217.31	7218.87	7218.87	2.26	1.32	7219.60	0.110199	6.12	9.08	102.95	77.38	1.05
Creek CL	0	SR MDDP 10-yr.	581.00	7217.31	7218.78	7218.78	2.17	1.26	7219.49	0.114883	6.05	9.02	96.07	75.75	1.05

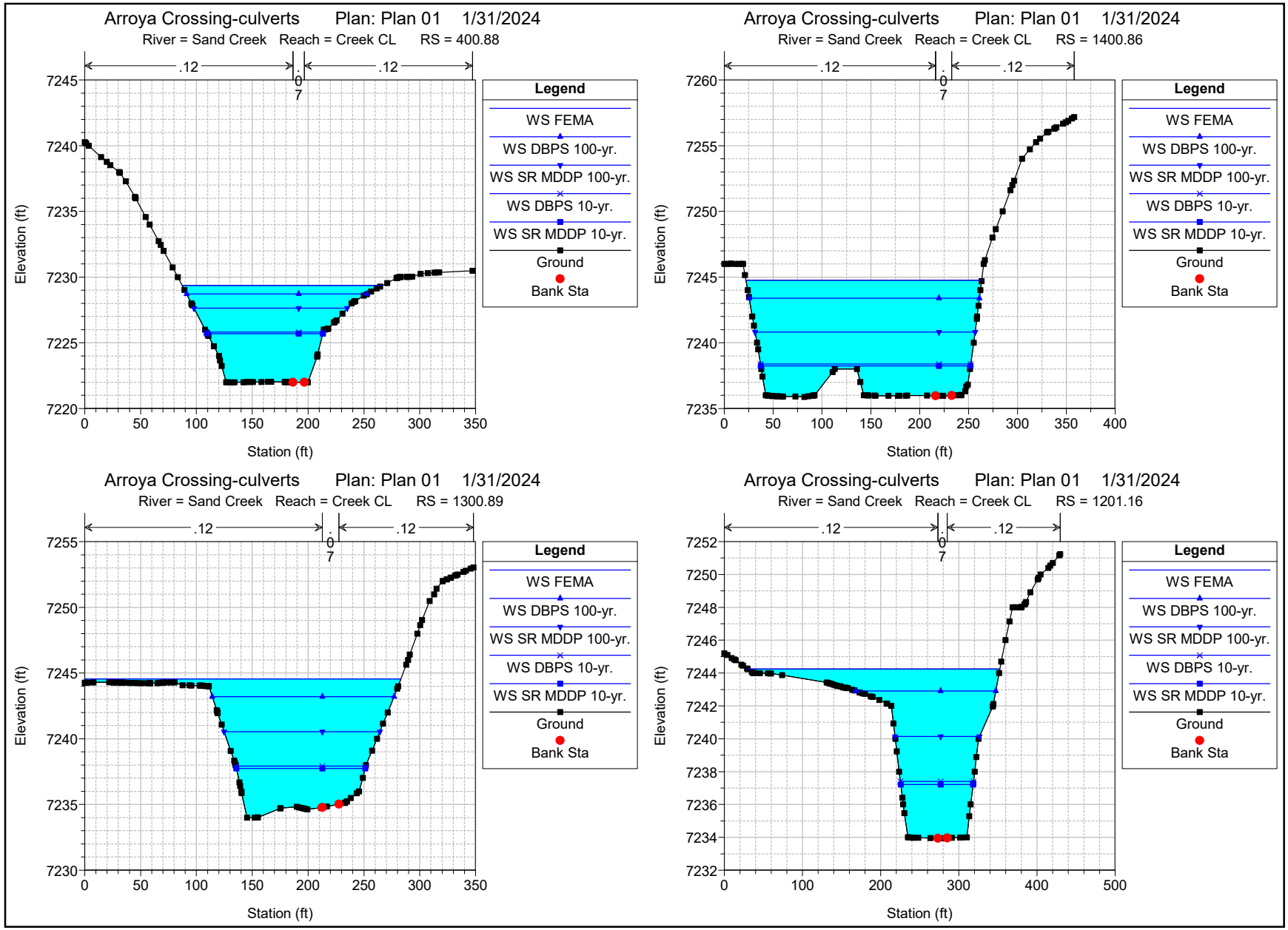
Arroya Crossing-culverts Plan: Plan 01 1/31/2024
River = Sand Creek Reach = Creek CL RS = 400.88
Elevation (ft)
Station (ft)
Legend
WS FEMA
WS DBPS 100-yr.
WS SR MDDP 100-yr.
WS DBPS 10-yr.
WS SR MDDP 10-yr.
Ground
Bank Sta
Arroya Crossing-culverts Plan: Plan 01 1/31/2024
River = Sand Creek Reach = Creek CL RS = 1400.86
Elevation (ft)
Station (ft)
Legend
WS FEMA
WS DBPS 100-yr.
WS SR MDDP 100-yr.
WS DBPS 10-yr.
WS SR MDDP 10-yr.
Ground
Bank Sta
Arroya Crossing-culverts Plan: Plan 01 1/31/2024
River = Sand Creek Reach = Creek CL RS = 1300.89
Elevation (ft)
Station (ft)
Legend
WS FEMA
WS DBPS 100-yr.
WS SR MDDP 100-yr.
WS DBPS 10-yr.
WS SR MDDP 10-yr.
Ground
Bank Sta
Arroya Crossing-culverts Plan: Plan 01 1/31/2024
River = Sand Creek Reach = Creek CL RS = 1201.16
Elevation (ft)
Station (ft)
Legend
WS FEMA
WS DBPS 100-yr.
WS SR MDDP 100-yr.
WS DBPS 10-yr.
WS SR MDDP 10-yr.
Ground
Bank Sta

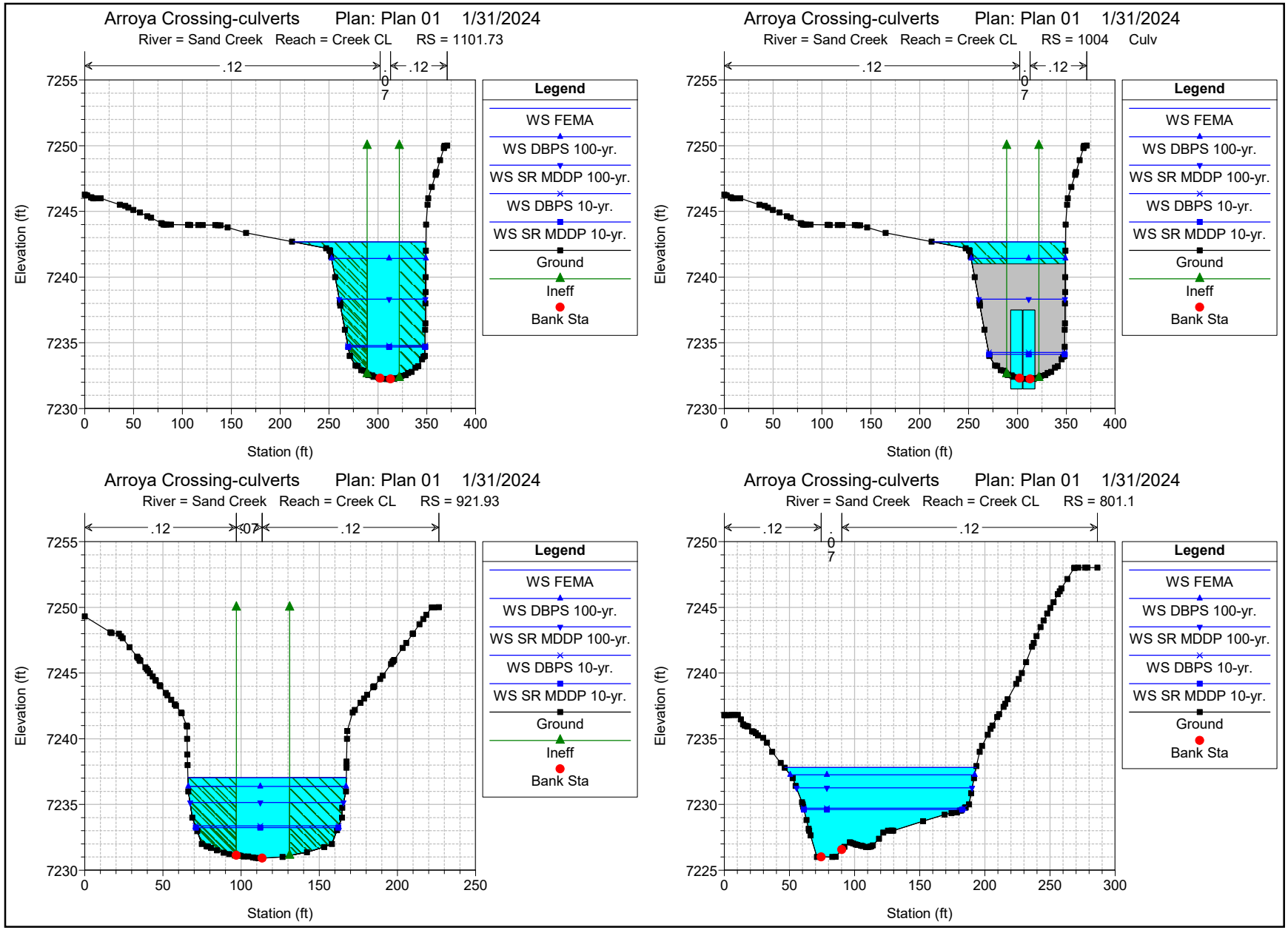
Arroya Crossing-culverts Plan: Plan 01 1/31/2024
River = Sand Creek Reach = Creek CL RS = 1101.73
Arroya Crossing-culverts Plan: Plan 01 1/31/2024
River = Sand Creek Reach = Creek CL RS = 1004 Culv
Arroya Crossing-culverts Plan: Plan 01 1/31/2024
River = Sand Creek Reach = Creek CL RS = 921.93
Arroya Crossing-culverts Plan: Plan 01 1/31/2024
River = Sand Creek Reach = Creek CL RS = 801.1
Elevation (ft)
Station (ft)
Legend
WS FEMA
WS DBPS 100-yr.
WS SR MDDP 100-yr.
WS DBPS 10-yr.
WS SR MDDP 10-yr.
Ground
Ineff
Bank Sta

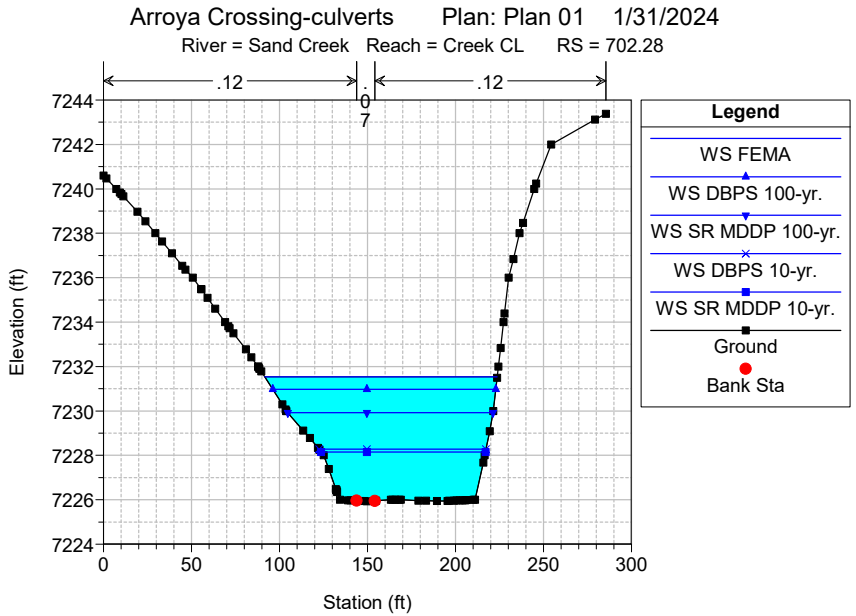
Arroya Crossing-culverts Plan: Plan 01 1/31/2024
River = Sand Creek Reach = Creek CL RS = 702.28
.12
.07
.12
Elevation (ft)
Station (ft)
Legend
WS FEMA
WS DBPS 100-yr.
WS SR MDDP 100-yr.
WS DBPS 10-yr.
WS SR MDDP 10-yr.
Ground
Bank Sta

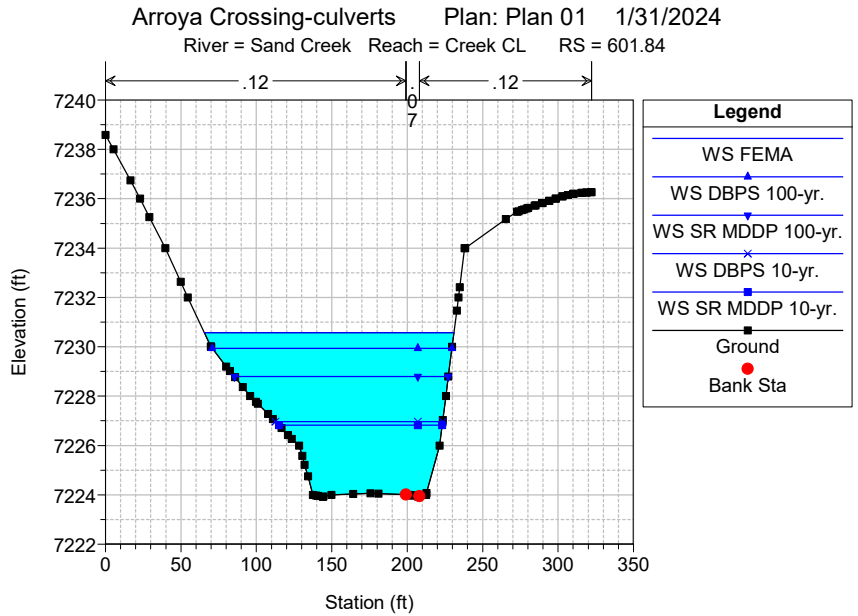
Arroya Crossing-culverts Plan: Plan 01 1/31/2024
River = Sand Creek Reach = Creek CL RS = 601.84
.12
.07
.12
Elevation (ft)
Station (ft)
Legend
WS FEMA
WS DBPS 100-yr.
WS SR MDDP 100-yr.
WS DBPS 10-yr.
WS SR MDDP 10-yr.
Ground
Bank Sta

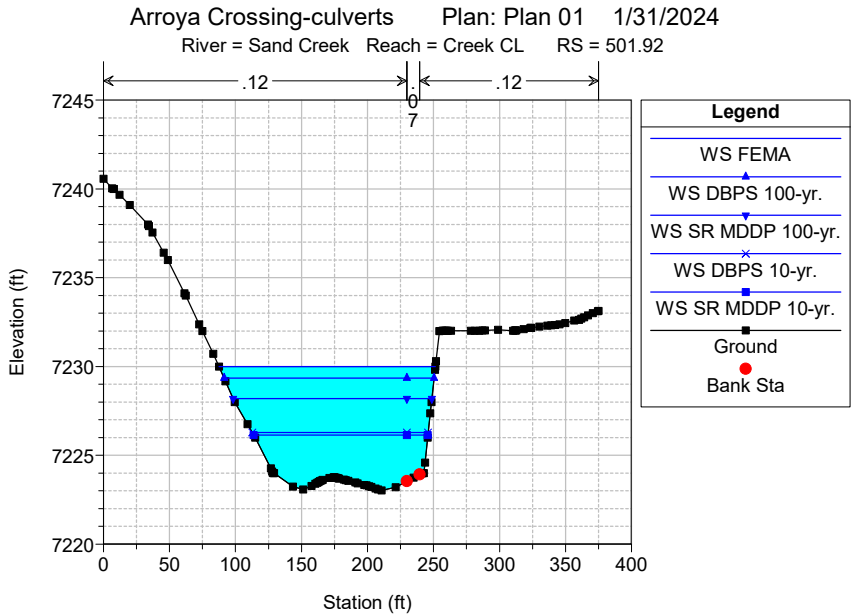
Arroya Crossing-culverts Plan: Plan 01 1/31/2024
River = Sand Creek Reach = Creek CL RS = 501.92
.12
.07
.12
Elevation (ft)
Station (ft)
Legend
WS FEMA
WS DBPS 100-yr.
WS SR MDDP 100-yr.
WS DBPS 10-yr.
WS SR MDDP 10-yr.
Ground
Bank Sta

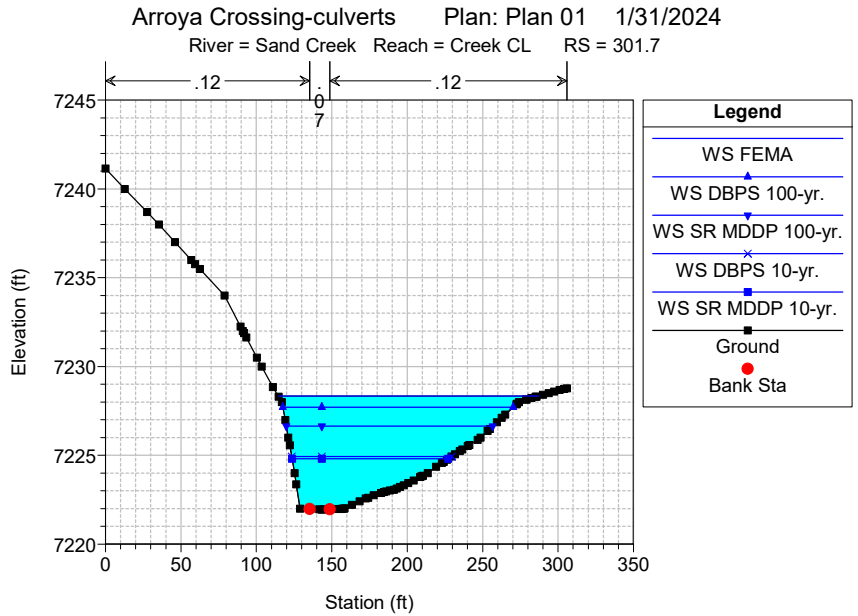
Arroya Crossing-culverts Plan: Plan 01 1/31/2024
River = Sand Creek Reach = Creek CL RS = 301.7
.12
.07
.12
Elevation (ft)
Station (ft)
Legend
WS FEMA
WS DBPS 100-yr.
WS SR MDDP 100-yr.
WS DBPS 10-yr.
WS SR MDDP 10-yr.
Ground
Bank Sta

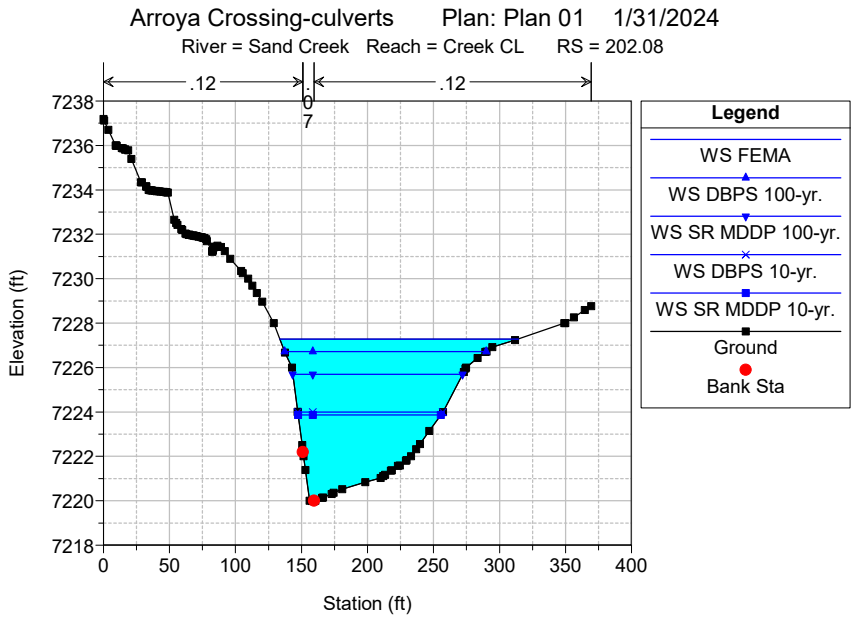
Arroya Crossing-culverts Plan: Plan 01 1/31/2024
River = Sand Creek Reach = Creek CL RS = 202.08
.12
.12
0
7
Elevation (ft)
Station (ft)
Legend
WS FEMA
WS DBPS 100-yr.
WS SR MDDP 100-yr.
WS DBPS 10-yr.
WS SR MDDP 10-yr.
Ground
Bank Sta

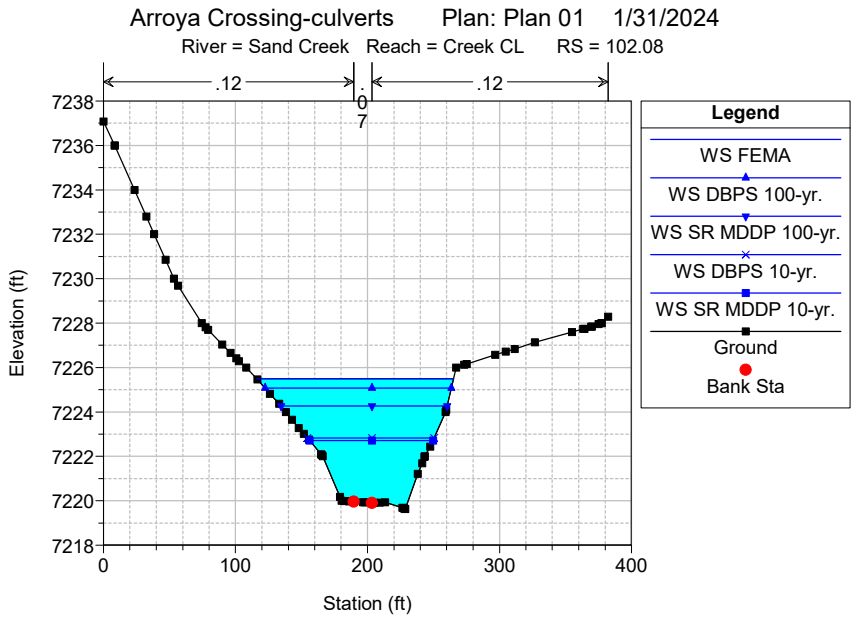
Arroya Crossing-culverts Plan: Plan 01 1/31/2024
River = Sand Creek Reach = Creek CL RS = 102.08
.12
.12
0
7
Elevation (ft)
Station (ft)
Legend
WS FEMA
WS DBPS 100-yr.
WS SR MDDP 100-yr.
WS DBPS 10-yr.
WS SR MDDP 10-yr.
Ground
Bank Sta

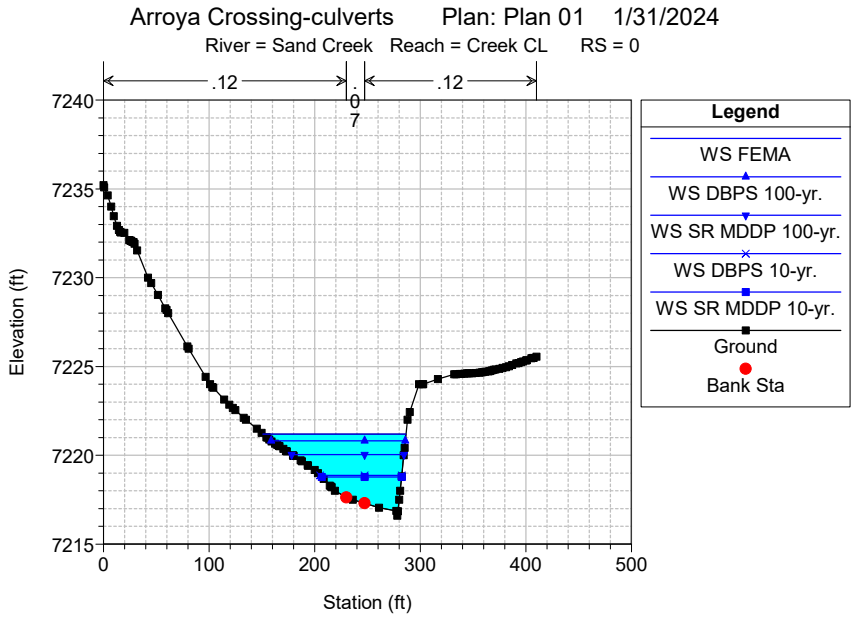
Arroya Crossing-culverts Plan: Plan 01 1/31/2024
River = Sand Creek Reach = Creek CL RS = 0
.12
.12
0
7
Elevation (ft)
Station (ft)
Legend
WS FEMA
WS DBPS 100-yr.
WS SR MDDP 100-yr.
WS DBPS 10-yr.
WS SR MDDP 10-yr.
Ground
Bank Sta

ARROYA CULVERT CROSSING

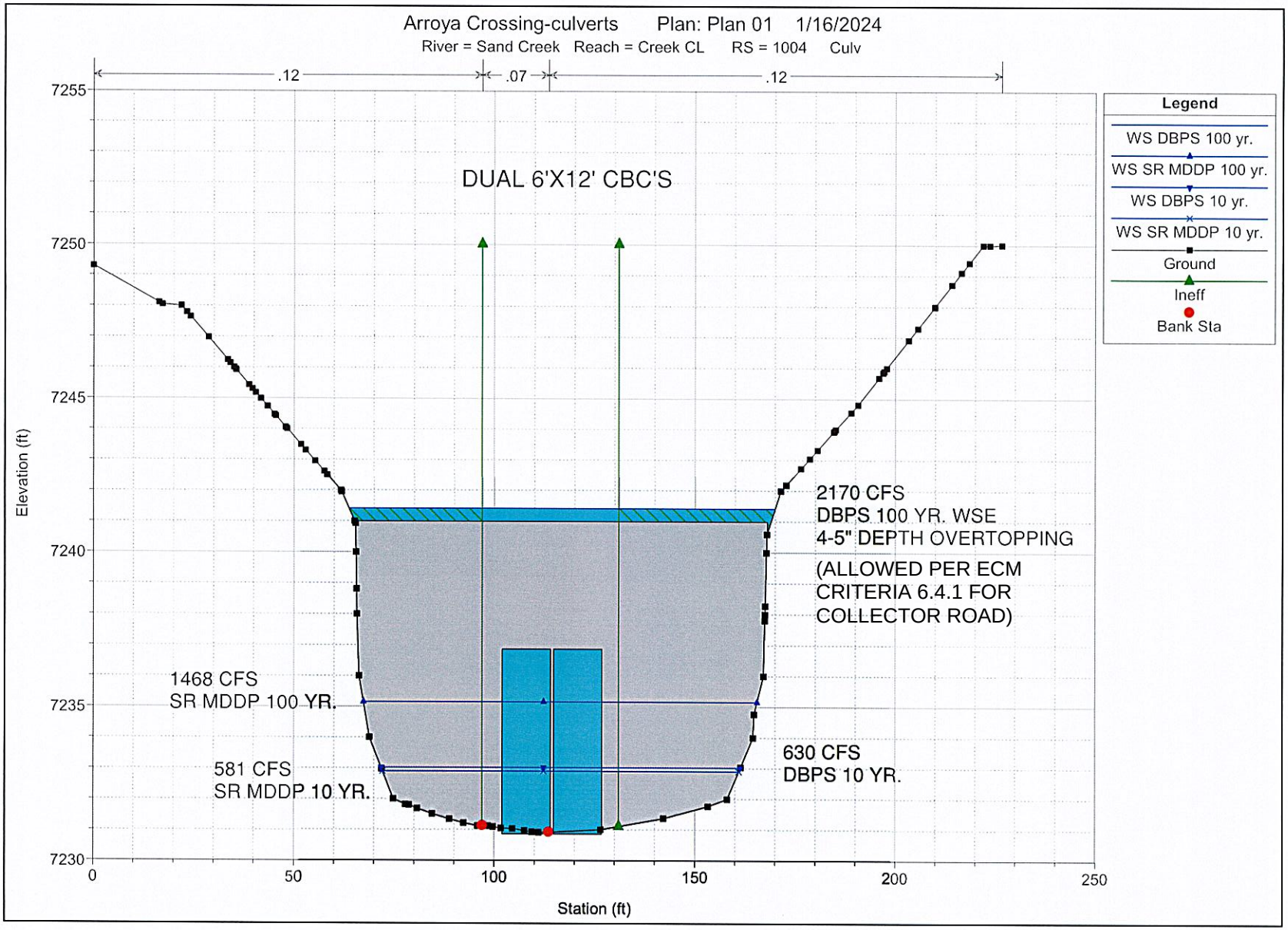

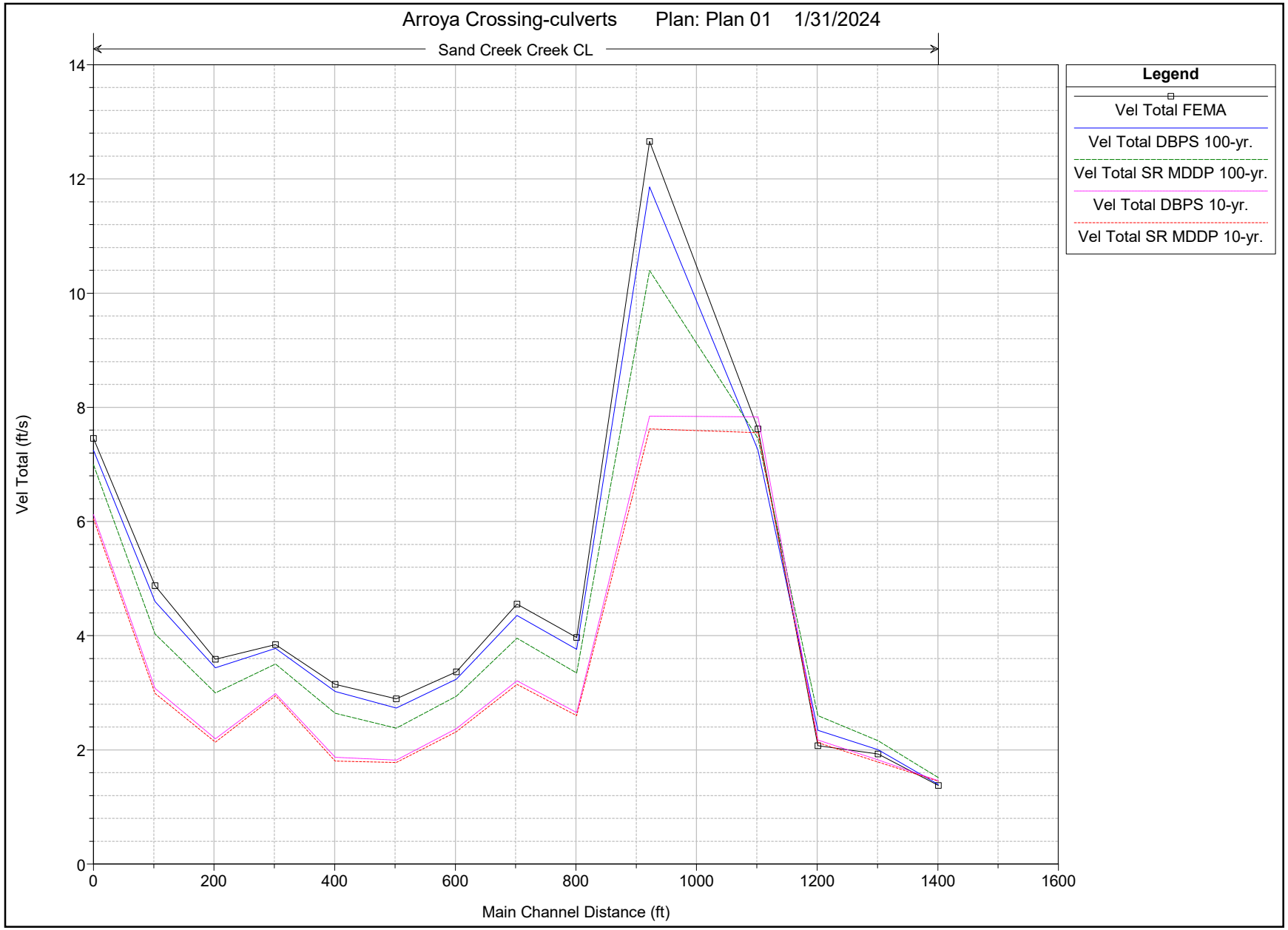
Arroya Crossing-culverts Plan: Plan 01 1/31/2024
Sand Creek Creek CL
Vel Total (ft/s)
Main Channel Distance (ft)
0
2
4
6
8
10
12
14
0
200
400
600
800
1000
1200
1400
1600
Legend
Vel Total FEMA
Vel Total DBPS 100-yr.
Vel Total SR MDDP 100-yr.
Vel Total DBPS 10-yr.
Vel Total SR MDDP 10-yr.

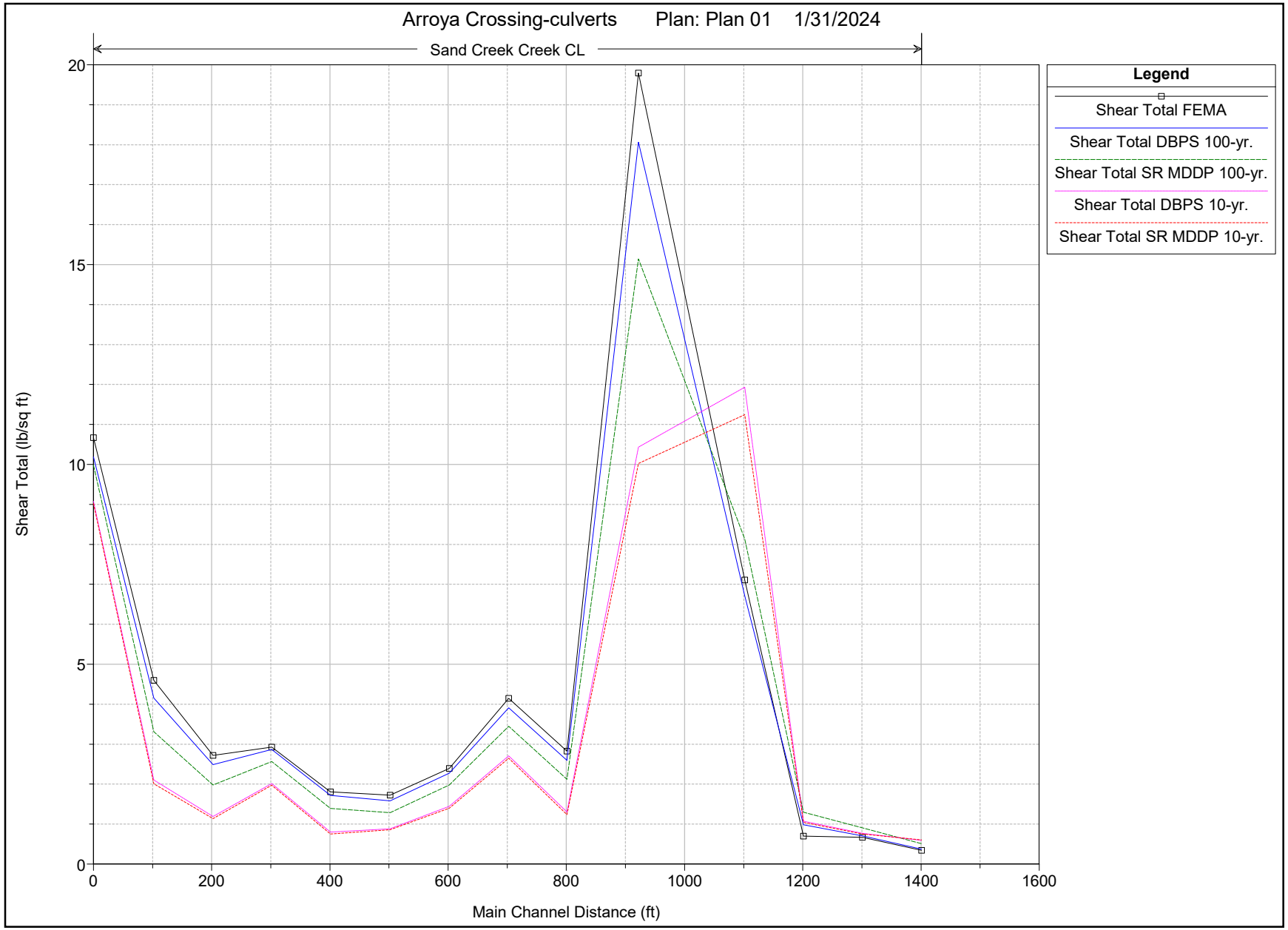
Arroya Crossing-culverts Plan: Plan 01 1/31/2024
Sand Creek Creek CL
Legend
Shear Total FEMA
Shear Total DBPS 100-yr.
Shear Total SR MDDP 100-yr.
Shear Total DBPS 10-yr.
Shear Total SR MDDP 10-yr.
Shear Total (lb/sq ft)
Main Channel Distance (ft)
0
5
10
15
20
0
200
400
600
800
1000
1200
1400
1600

ARROYA LANE CULVERT CALCULATIONS

CLASSIC
CONSULTING
ENGINEERS & SURVEYORS

HY-8 Culvert Analysis Report

Crossing Discharge Data

Discharge Selection Method: Specify Minimum, Design, and Maximum Flow

Minimum Flow: 581.00 cfs

Design Flow: 1486.00 cfs

Maximum Flow: 1486.00 cfs

Table 1 - Summary of Culvert Flows at Crossing: Arroya Lane

Headwater Elevation (ft)	Total Discharge (cfs)	Box Culverts Discharge (cfs)	Roadway Discharge (cfs)	Iterations
7235.87	581.00	581.00	0.00	1
7236.32	671.50	671.50	0.00	1
7236.77	762.00	762.00	0.00	1
7237.22	852.50	852.50	0.00	1
7237.68	943.00	943.00	0.00	1
7238.15	1033.50	1033.50	0.00	1
7238.64	1124.00	1124.00	0.00	1
7239.16	1214.50	1214.50	0.00	1
7239.54	1305.00	1279.85	24.92	6
7239.76	1395.50	1315.96	79.40	5
7239.95	1486.00	1346.01	139.60	4
7239.35	1247.57	1247.57	0.00	Overtopping

Culvert Data: Box Culverts

Site Data - Box Culverts

Site Data Option: Culvert Invert Data

Inlet Station: 100.00 ft

Inlet Elevation: 7231.50 ft

Outlet Station: 165.00 ft

Outlet Elevation: 7230.70 ft

Number of Barrels: 2

Culvert Data Summary - Box Culverts

Barrel Shape: Concrete Box

Barrel Span: 12.00 ft

Barrel Rise: 6.00 ft

Barrel Material: Concrete

Embedment: 0.00 in

Barrel Manning's n: 0.0130

Culvert Type: Straight

Inlet Configuration: Square Edge (0º flare) Wingwall (Ke=0.7)

Inlet Depression: None

Roadway Data for Crossing: Arroya Lane

Roadway Profile Shape: Constant Roadway Elevation

Crest Length: 100.00 ft

Crest Elevation: 7239.35 ft

Roadway Surface: Paved

Roadway Top Width: 45.00 ft

Culvert Crossing: Arroya Lane

Culvert Summary Table - Box Culverts

Discharge Names	Total Discharge (cfs)	Culvert Discharge (cfs)	Headwater Elevation (ft)	Inlet Control Depth(ft)	Outlet Control Depth(ft)	Flow Type	Normal Depth (ft)	Critical Depth (ft)	Outlet Depth (ft)	Tailwater Depth (ft)	Outlet Velocity (ft/s)	Tailwater Velocity (ft/s)
SR MDDP 10 yr.	581.00	581.00	7235.87	4.37	2.29	1-S2n	1.62	2.63	1.93	1.12	12.55	4.36
DBPS 10 yr.	630.00	630.00	7236.11	4.61	2.52	1-S2n	1.71	2.78	2.05	1.18	12.81	4.50
SR MDDP 100 yr.	1486.00	1346.09	7239.95	8.45	6.98	5-S2n	2.85	4.61	3.60	1.93	15.58	6.19

Include analysis with SC DBPS and FEMA flows as in previous version.

Now included

Crossing - Arroya Lane, Design Discharge - 1486.0 cfs

Culvert - Box Culverts, Culvert Discharge - 1346.0 cfs

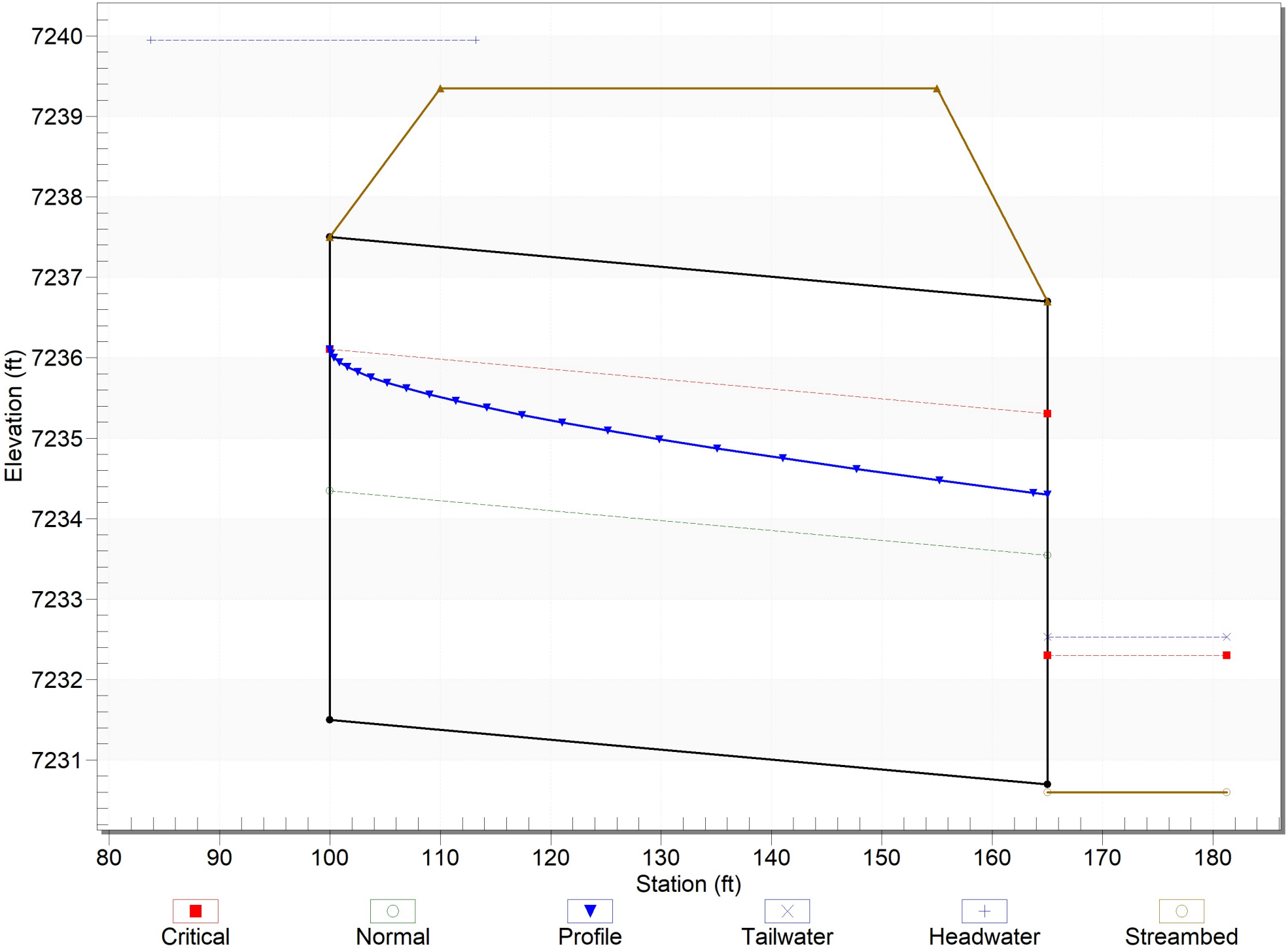

DETERMINATION OF CULVERT HEADWATER AND OUTLET PROTECTION

MHFD-Culvert, Version 4.00 (May 2020)

Project: RETREAT AT TIMBERRIDGE FILING NO. 3

ID: DUAL 6'X12' CBC'S

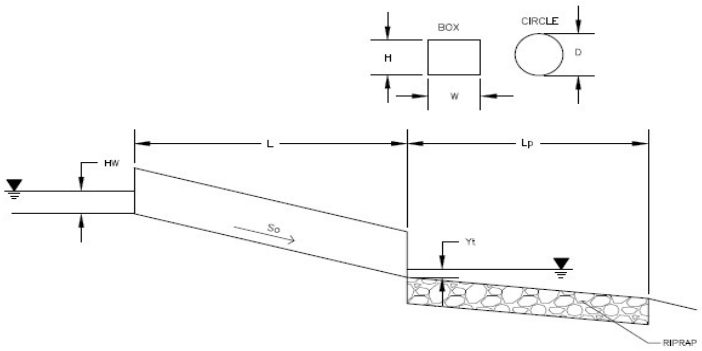

Soil Type:

Choose One:
- (●) Sandy
- ( ) Non-Sandy

Supercritical Flow! Using Adjusted Rise to calculate protection type.

Design Information:

Design Discharge	Q =	1486	cfs
Circular Culvert:			
Barrel Diameter in Inches	D =		inches
Inlet Edge Type (Choose from pull-down list)			
OR:			
Box Culvert:		**OR**	
Barrel Height (Rise) in Feet	H (Rise) =	6	ft
Barrel Width (Span) in Feet	W (Span) =	12	ft
Inlet Edge Type (Choose from pull-down list)	Square Edge w/ 90 deg. Headwall & 15 deg. Flared Wingwall		
Number of Barrels	# Barrels =	2	
Inlet Elevation	Elev IN =	7231.5	ft
Outlet Elevation **OR** Slope	Elev OUT =	7230.7	ft
Culvert Length	L =	65	ft
Manning's Roughness	n =	0.013	
Bend Loss Coefficient	k_b =	0	
Exit Loss Coefficient	k_x =	1	
Tailwater Surface Elevation	$Y_{t,\ Elevation}$ =		ft
Max Allowable Channel Velocity	V =	5	ft/s

Calculated Results:

Culvert Cross Sectional Area Available	A =	72.00	ft^2
Culvert Normal Depth	Y_n =	3.05	ft
Culvert Critical Depth	Y_c =	4.92	ft
Froude Number	Fr =	2.05	**Supercritical!**
Entrance Loss Coefficient	k_e =	0.20	
Friction Loss Coefficient	k_f =	0.13	
Sum of All Loss Coefficients	k_s =	1.33	ft
Headwater:			
Inlet Control Headwater	HW_I =	8.92	ft
Outlet Control Headwater	HW_O =	6.85	ft
Design Headwater Elevation	**HW =**	**7240.42**	**ft**
Headwater/Diameter OR Headwater/Rise Ratio	**HW/H=**	**1.49**	
Outlet Protection:			
Flow/(Span * Rise^1.5)	Q/WH^1.5 =	4.21	$ft^{0.5}/s$
Tailwater Surface Height	Y_t =	2.40	ft
Tailwater/Rise	Yt/H =	0.40	
Expansion Factor	1/(2*tan(Θ)) =	2.12	
Flow Area at Max Channel Velocity	A_t =	297.20	ft^2
Width of Equivalent Conduit for Multiple Barrels	W_{eq} =	24.00	ft
Length of Riprap Protection	**L_p =**	**60**	**ft**
Width of Riprap Protection at Downstream End	**T =**	**53**	**ft**
Adjusted Rise for Supercritical Flow	Ha =	4.52	ft
Minimum Theoretical Riprap Size	d_{50} min=	9	in
Nominal Riprap Size	d_{50} nominal=	12	in
MHFD Riprap Type	**Type =**	**M**	

DRAINAGE MAPS

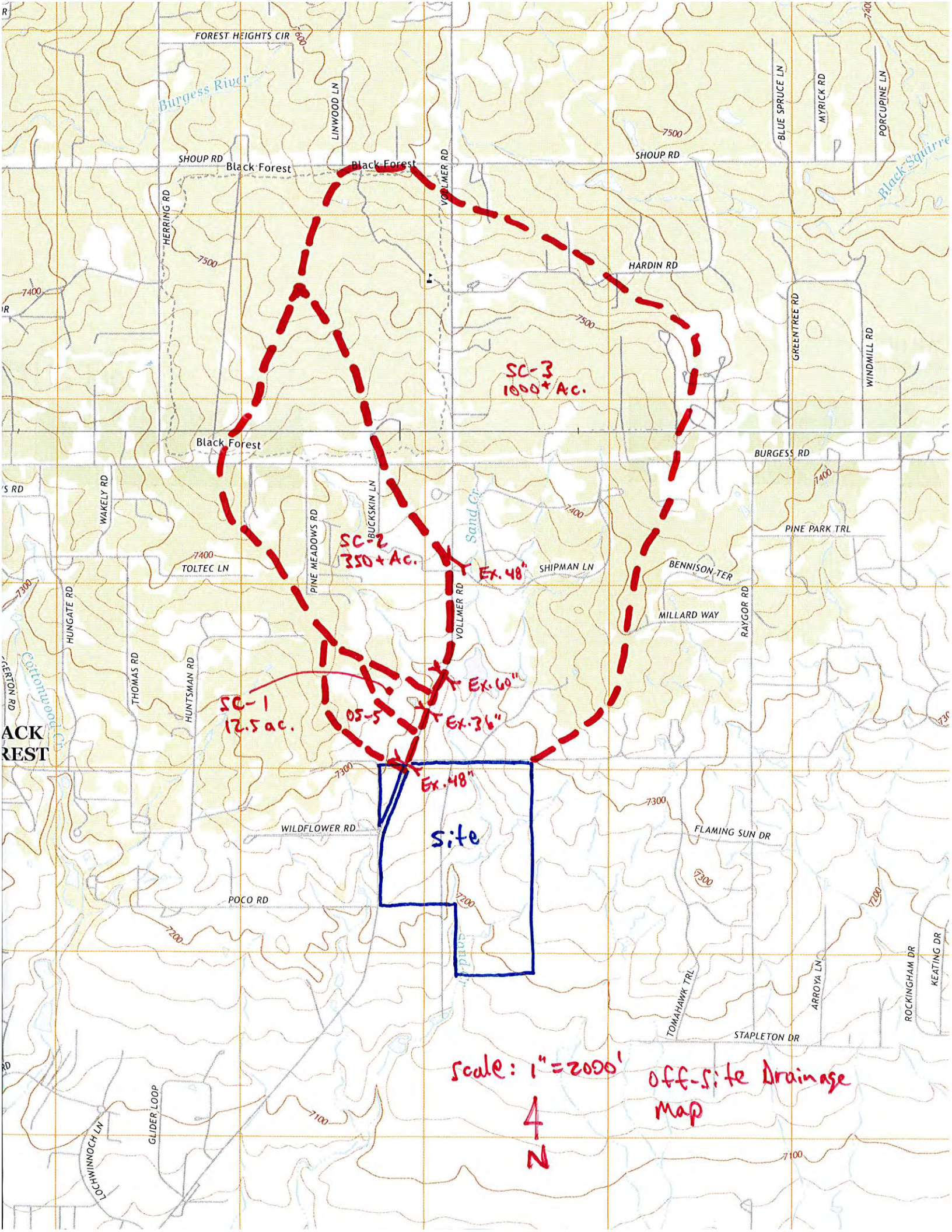
FOREST HEIGHTS CIR
Burgess River
LINWOOD LN
SHOUP RD
Black Forest
Black Forest
VOLLMER RD
SHOUP RD
BLUE SPRUCE LN
MYRICK RD
PORCUPINE LN
Black Squirre
HERRING RD
HARDIN RD
GREENTREE RD
WINDMILL RD
SC-3
1000+ Ac.
Black Forest
BURGESS RD
WAKELY RD
PINE MEADOWS RD
BUCKSKIN LN
Sand Cr
PINE PARK TRL
SC-2
350+ Ac.
TOLTEC LN
Ex. 48"
SHIPMAN LN
BENNISON TER
HUNGATE RD
VOLLMER RD
MILLARD WAY
RAYGOR RD
Cottonwood Cr
THOMAS RD
HUNTSMAN RD
Ex. 60"
SC-1
12.5 ac.
05-5
Ex. 36"
Ex. 48"
Site
WILDFLOWER RD
FLAMING SUN DR
POCO RD
TOMAHAWK TRL
ARROYA LN
ROCKINGHAM DR
KEATING DR
STAPLETON DR
GLIDER LOOP
LOCHWINNOCH LN
Scale: 1" = 2000'
Off-Site Drainage Map
N

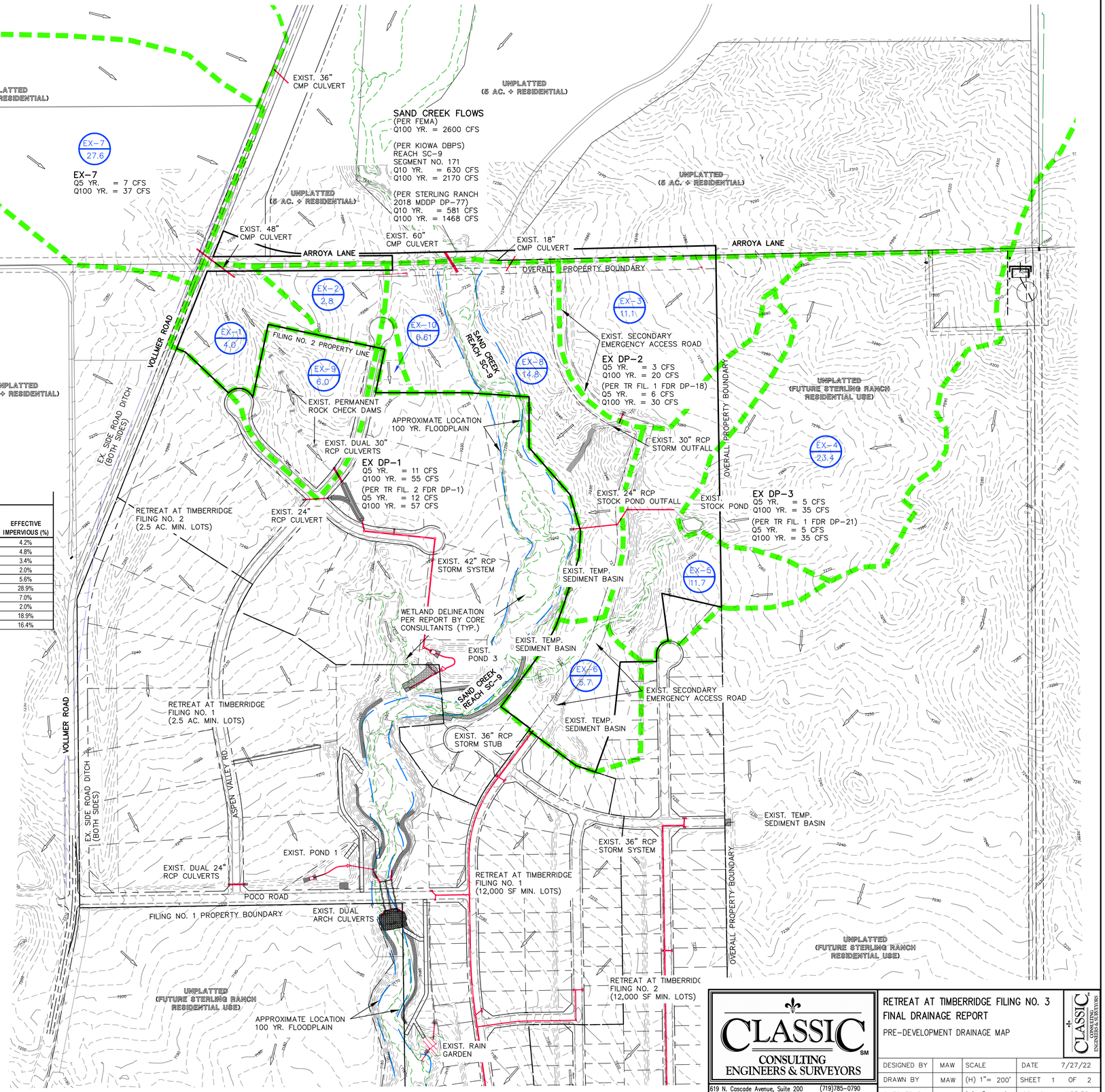

FINAL DRAINAGE REPORT ~ SURFACE ROUTING SUMMARY

Design Point(s)	Contributing Basins	Equivalent CA(5)	Equivalent CA(100)	Maximum Tc	Intensity I(5)	Intensity I(100)	Flow Q(5)	Flow Q(100)	Inlet Size
EX DP-1	Basin EX-1, EX-2, EX-7 and EX-9 (40.4 AC.)	5.38	16.07	40.4	2.03	3.41	11	55	EX. DUAL 30" RCP CULVERTS
EX DP-2	Basin EX-3 (11.1 AC.)	1.16	4.12	22.5	2.92	4.89	3	20	EX. 30" RCP STORM SEWER
EX DP-3	Basin EX-4 (24.7 AC.)	2.11	8.42	29.8	2.49	4.18	5	35	EX. STOCK POND

FINAL DRAINAGE REPORT ~ BASIN RUNOFF COEFFICIENT SUMMARY

BASIN	TOTAL AREA (AC)	IMPERVIOUS AREA / STREETS: AREA (AC)	C(2)	C(5)	C(100)	LANDSCAPE/DEVELOPED AREAS: AREA (AC)	C(2)	C(5)	C(100)	WEIGHTED: C(2)	C(5)	C(100)	WEIGHTED CA: CA(2)	CA(5)	CA(100)	EFFECTIVE IMPERVIOUS (%)
EX-1	4.0	0.10	0.89	0.90	0.96	3.9	0.03	0.09	0.36	0.05	0.11	0.38	**0.21**	**0.44**	**1.50**	4.2%
EX-2	2.8	0.10	0.89	0.90	0.96	2.7	0.03	0.09	0.36	0.06	0.12	0.38	**0.17**	**0.33**	**1.07**	4.8%
EX-3	11.1	0.20	0.89	0.90	0.96	10.9	0.03	0.09	0.36	0.05	0.10	0.37	**0.51**	**1.16**	**4.12**	3.4%
EX-4	23.4	0.00	0.57	0.59	0.70	23.4	0.03	0.09	0.36	0.03	0.09	0.36	**0.70**	**2.11**	**8.42**	2.0%
EX-5	11.7	1.50	0.18	0.25	0.47	10.2	0.03	0.09	0.36	0.05	0.11	0.37	**0.58**	**1.29**	**4.38**	5.6%
EX-6	5.7	1.50	0.23	0.30	0.50	4.2	0.15	0.22	0.46	0.17	0.24	0.47	**0.98**	**1.37**	**2.68**	28.9%
EX-7	27.6	0.00	0.89	0.90	0.96	27.6	0.05	0.12	0.39	0.05	0.12	0.39	**1.38**	**3.31**	**10.76**	7.0%
EX-8	14.8	0.00	0.89	0.90	0.96	14.8	0.03	0.09	0.36	0.03	0.09	0.36	**0.44**	**1.33**	**5.33**	2.0%
EX-9	6.0	0.60	0.89	0.90	0.96	5.4	0.06	0.14	0.40	0.14	0.22	0.46	**0.86**	**1.30**	**2.74**	18.9%
EX-10	0.61	0.10	0.89	0.90	0.96	0.51	0.06	0.14	0.40	0.20	0.26	0.49	**0.12**	**0.16**	**0.30**	16.4%

FINAL DRAINAGE REPORT ~ BASIN RUNOFF SUMMARY

BASIN	WEIGHTED CA(2)	CA(5)	CA(100)	OVERLAND C(5)	Length (ft)	Height (ft)	Tc (min)	STREET / CHANNEL FLOW Length (ft)	Slope (%)	Velocity (fps)	Tc (min)	Tc TOTAL (min)	INTENSITY I(2) (in/hr)	I(5) (in/hr)	I(100) (in/hr)	TOTAL FLOWS Q(2) (cfs)	Q(5) (cfs)	Q(100) (cfs)
EX-1	0.21	0.44	1.50	0.09	280	12	18.9					18.9	2.54	3.18	5.33	0.5	**1.4**	**8**
EX-2	0.17	0.33	1.07	0.09	260	8	20.3					20.3	2.45	3.07	5.15	0.4	**1.0**	**5**
EX-3	0.51	1.16	4.12	0.09	300	11	20.6	160	2.0%	1.4	1.9	22.5	2.33	2.92	4.89	1	**3**	**20**
EX-4	0.70	2.11	8.42	0.09	300	16	18.2	1300	3.5%	1.9	11.6	29.8	2.00	2.49	4.18	1	**5**	**35**
EX-5	0.58	1.29	4.38	0.09	300	14	19.0	550	3.0%	1.7	5.3	24.3	2.24	2.80	4.70	1	**4**	**21**
EX-6	0.98	1.37	2.68	0.22	300	10	18.5					18.5	2.56	3.21	5.38	2	**4**	**14**
EX-7	1.38	3.31	10.76	0.12	300	12	19.4	1300	2.2%	1.0	21.0	40.4	1.63	2.03	3.41	2	**7**	**37**
EX-8	0.44	1.33	5.33	0.09	300	10	21.2					21.2	2.40	3.00	5.04	1	**4**	**27**
EX-9	0.86	1.30	2.74	0.14	230	15	14.2	450	2.0%	1.4	5.3	19.5	2.50	3.13	5.25	2	**4**	**14**
EX-10	0.12	0.16	0.30	0.14	220	4	21.1					21.1	2.41	3.01	5.05	0.3	**0.5**	**1.5**

LEGEND

DESCRIPTION	SYMBOL
EXISTING GROUND CONTOUR	6910
PROPOSED FINISHED CONTOUR	6910
BASIN BOUNDARY	
BASIN IDENTIFIER / AREA IN ACRES	BB 10.0
EXISTING DIRECTION OF FLOW	
EXISTING STORM SEWER	
WETLAND DELINEATION	

CLASSIC CONSULTING ENGINEERS & SURVEYORS
619 N. Cascade Avenue, Suite 200
Colorado Springs, Colorado 80903
(719)785-0790
(719)785-0799 (Fax)

RETREAT AT TIMBERRIDGE FILING NO. 3
FINAL DRAINAGE REPORT
PRE-DEVELOPMENT DRAINAGE MAP

DESIGNED BY	MAW	SCALE	DATE	7/27/22
DRAWN BY	MAW	(H) 1"= 200'	SHEET 1	OF 2
CHECKED BY		(V) 1"= N/A	JOB NO.	1185.30

V:\1185.30\REPORTS\FDR\118530FDR EX DM.dwg, 11/10/2023 4:19:00 PM, 1:1

FINAL DRAINAGE REPORT ~ SURFACE ROUTING SUMMARY

Design Point(s)	Contributing Basins	Equivalent CA(5)	Equivalent CA(100)	Maximum Tc	Intensity I(5)	Intensity I(100)	Flow Q(5)	Flow Q(100)	Inlet Size
1	Basin A (14.2 AC.)	2.09	5.82	20.1	3.08	5.18	6	30	EX. 30" RCP CULVERT
2	Basin C (1.4 AC.)	0.48	0.76	16.9	3.34	5.61	2	4	5' TYPE R SUMP INLET
3	Basins B, OS-2 and D (9.47 AC.)	1.92	4.19	30.8	2.44	4.10	5	21	15' TYPE R SUMP INLET
4	Basins F and OS-7 (2.2 AC.)	0.98	1.37	16.7	3.36	5.63	2	8	EX. 10' TYPE R AT-GRADE INLET
5	Basins E and OS-3 (6.5 AC.)	1.56	3.03	17.7	3.27	5.50	5	17	EX. 15' TYPE R AT-GRADE INLET
6	Basin OS-1 (24.1 AC.)	2.17	8.68	29.8	2.49	4.18	5	35	PROP. TEMP. SEDIMENT BASIN
7	Basin OS-4 (3.3 AC.)	0.59	1.43	25.8	2.71	4.54	2	6	PROP. TYPE C CDOT INLET
8	Basin N (0.55 AC.)	0.30	0.39	7.8	4.50	7.55	1	3	5' TYPE R SUMP INLET
9	Basin M (0.54 AC.)	0.36	0.43	7.8	4.50	7.55	2	3	5' TYPE R SUMP INLET
10	Basins OS-4, N, M, O (5.0 AC.)	1.33	2.48	26.1	2.69	4.51	4	11	PROP. RAIN GARDEN 1
11	Basin OS-6 (5.9 AC.)	0.94	2.42	24.8	2.77	4.65	3	11	PROP. RIP-RAP RUNDOWN
12	Basins EX-7, K, L and EX-9 (40.8 AC.)	6.13	16.77	40.4	2.03	3.41	12	57	EX. DUAL 30" RCP CULVERTS

FINAL DRAINAGE REPORT ~ PIPE ROUTING SUMMARY

Pipe Run	Contributing Basins	Equivalent CA(5)	Equivalent CA(100)	Maximum Tc	Intensity I(5)	Intensity I(100)	Flow Q(5)	Flow Q(100)	Pipe Size*
1	DP-1	2.09	5.82	20.1	3.08	5.18	6	30	30" RCP
2	DP-2	0.48	0.76	16.9	3.34	5.61	2	4	18" RCP
3	DP-3	1.92	4.19	30.8	2.44	4.10	5	21	30" RCP
4	PR-1, PR-2 and PR-3	4.50	10.77	20.9	3.03	5.08	14	55	36" RCP
5	DP-7	0.59	1.43	25.8	2.71	4.54	2	6	18" RCP
6	DP-8	0.30	0.39	7.8	4.50	7.55	1	3	18" RCP
7	DP-9	0.36	0.43	7.8	4.50	7.55	2	3	18" RCP
8	PR-6 and PR-7	0.66	0.81	7.8	4.50	7.55	3	6	24" RCP
9	PR-5, PR-8	1.25	2.24	26.0	2.69	4.52	3	10	24" RCP

FINAL DRAINAGE REPORT ~ BASIN RUNOFF SUMMARY

BASIN	WEIGHTED CA(2)	WEIGHTED CA(5)	WEIGHTED CA(100)	OVERLAND C(5)	OVERLAND Length (ft)	OVERLAND Height (ft)	OVERLAND Tc (min)	STREET / CHANNEL FLOW Length (ft)	STREET / CHANNEL FLOW Slope (%)	STREET / CHANNEL FLOW Velocity (fps)	STREET / CHANNEL FLOW Tc (min)	Tc TOTAL (min)	INTENSITY I(2) (in/hr)	INTENSITY I(5) (in/hr)	INTENSITY I(100) (in/hr)	TOTAL FLOWS Q(2) (cfs)	TOTAL FLOWS Q(5) (cfs)	TOTAL FLOWS Q(100) (cfs)
OS-1	0.72	2.17	8.68	0.09	300	16	18.2	1300	3.5%	1.9	11.6	29.8	2.00	2.49	4.18	1	5	35
OS-2	0.07	0.10	0.22	0.22	220	11	13.9					13.9	2.91	3.64	6.11	0.2	0.4	1.3
OS-3	0.76	1.05	1.97	0.25	100	2	12.2	550	2.8%	1.7	5.5	17.7	2.62	3.27	5.50	2	3	11
OS-4	0.38	0.59	1.43	0.12	300	10	20.6	700	5.0%	2.2	5.2	25.8	2.17	2.71	4.54	1	2	6
OS-5	1.67	4.92	18.20	0.10	300	20	16.7	1900	3.0%	1.7	18.3	35.0	1.80	2.25	3.78	3	11	69
OS-6	0.61	0.94	2.42	0.09	300	10	21.2	300	2.0%	1.4	3.5	24.8	2.22	2.77	4.65	1	3	11
OS-7	0.58	0.65	0.90	0.14	100	2	13.8	250	2.0%	1.4	2.9	16.7	2.68	3.36	5.63	2	2	5
A	1.13	2.09	5.82	0.12	300	13	18.9	100	2.0%	1.4	1.2	20.1	2.47	3.08	5.18	3	6	30
B	1.06	1.76	3.87	0.20	230	3	22.6	700	2.0%	1.4	8.2	30.8	1.96	2.44	4.10	2	4	16
C	0.39	0.48	0.76	0.25	50	1	8.6	700	2.0%	1.4	8.2	16.9	2.67	3.34	5.61	1	2	4
D	0.05	0.06	0.10	0.30	50	1	8.1					8.1	3.54	4.44	7.46	0.2	0.3	0.7
E	0.35	0.51	1.06	0.22	100	5	9.3	200	5.5%	4.7	0.7	10.1	3.29	4.12	6.92	1	2	7
F	0.29	0.33	0.47	0.25	60	2	8.0	200	5.5%	4.7	0.7	8.7	3.46	4.34	7.28	1.0	1.4	3
G	0.40	0.55	1.03	0.25	300	9	18.5	600	1.5%	1.2	8.2	26.7	2.13	2.66	4.46	1	1	5
H1	0.29	0.46	1.09	0.12	100	8	8.9					8.9	3.43	4.30	7.22	1	2	8
H2	0.46	0.72	1.44	0.16	100	12	7.5					7.5	3.64	4.57	7.67	2	3	11
I	0.13	0.31	1.01	0.12	300	4	27.9					27.9	2.08	2.59	4.35	0.3	0.8	4
J1	0.34	0.49	1.08	0.12	300	12	19.4					19.4	2.51	3.14	5.26	1	2	6
J2	0.02	0.05	0.16	0.12	160	4	16.5					16.5	2.70	3.37	5.66	0.1	0.2	0.9
K	0.63	0.83	1.60	0.12	300	8	22.2					22.2	2.35	2.93	4.93	1	2	8
L	0.40	0.70	1.67	0.14	300	12	19.0					19.0	2.53	3.17	5.32	1	2	9
M	0.34	0.36	0.43	0.12	15	0.3	5.5	350	1.5%	2.4	2.4	7.8	3.59	4.50	7.55	1	2	3
N	0.28	0.30	0.39	0.12	15	0.3	5.5	350	1.5%	2.4	2.4	7.8	3.59	4.50	7.55	1	1	3
O	0.03	0.07	0.24	0.12	100	6	9.8					9.8	3.32	4.16	6.98	0.1	0.3	2

FINAL DRAINAGE REPORT ~ BASIN RUNOFF COEFFICIENT SUMMARY

BASIN	TOTAL AREA (AC)	IMPERVIOUS AREA / STREETS AREA (AC)	IMPERVIOUS C(2)	IMPERVIOUS C(5)	IMPERVIOUS C(100)	LANDSCAPE/DEVELOPED AREAS AREA (AC)	LANDSCAPE C(2)	LANDSCAPE C(5)	LANDSCAPE C(100)	WEIGHTED C(2)	WEIGHTED C(5)	WEIGHTED C(100)	WEIGHTED CA CA(2)	WEIGHTED CA CA(5)	WEIGHTED CA CA(100)	EFFECTIVE IMPERVIOUS (%)
OS-1	24.1	0.00	0.89	0.90	0.96	24.1	0.03	0.09	0.36	0.03	0.09	0.36	0.72	2.17	8.68	2.0%
OS-2	0.47	0.00	0.89	0.90	0.96	0.47	0.15	0.22	0.46	0.15	0.22	0.46	0.07	0.10	0.22	25.0%
OS-3	4.2	0.00	0.89	0.90	0.96	4.2	0.18	0.25	0.47	0.18	0.25	0.47	0.76	1.05	1.97	30.0%
OS-4	3.3	0.25	0.89	0.90	0.96	3.1	0.05	0.12	0.39	0.11	0.18	0.43	0.38	0.59	1.43	13.3%
OS-5	49.2	0.00	0.89	0.90	0.96	49.2	0.03	0.10	0.37	0.03	0.10	0.37	1.67	4.92	18.20	3.0%
OS-6	5.9	0.50	0.89	0.90	0.96	5.4	0.03	0.09	0.36	0.10	0.16	0.41	0.61	0.94	2.42	14.0%
OS-7	1.4	0.60	0.89	0.90	0.96	0.8	0.06	0.14	0.40	0.42	0.47	0.64	0.58	0.65	0.90	55.7%
A	14.2	0.50	0.89	0.90	0.96	13.70	0.05	0.12	0.39	0.08	0.15	0.41	1.13	2.09	5.82	10.1%
B	8.8	0.00	0.89	0.90	0.96	8.80	0.12	0.20	0.44	0.12	0.20	0.44	1.06	1.76	3.87	20.0%
C	1.4	0.20	0.89	0.90	0.96	1.20	0.18	0.25	0.47	0.28	0.34	0.54	0.39	0.48	0.76	38.6%
D	0.2	0.00	0.89	0.90	0.96	0.20	0.23	0.30	0.50	0.23	0.30	0.50	0.05	0.06	0.10	40.0%
E	2.3	0.00	0.89	0.90	0.96	2.30	0.15	0.22	0.46	0.15	0.22	0.46	0.35	0.51	1.06	25.0%
F	0.8	0.20	0.89	0.90	0.96	0.60	0.18	0.25	0.47	0.36	0.41	0.59	0.29	0.33	0.47	45.0%
G	2.2	0.00	0.89	0.90	0.96	2.20	0.18	0.25	0.47	0.18	0.25	0.47	0.40	0.55	1.03	30.0%
H1	2.5	0.20	0.89	0.90	0.96	2.30	0.05	0.12	0.39	0.12	0.18	0.44	0.29	0.46	1.09	14.0%
H2	3.1	0.30	0.89	0.90	0.96	2.80	0.07	0.16	0.41	0.15	0.23	0.46	0.46	0.72	1.44	15.5%
I	2.6	0.00	0.89	0.90	0.96	2.60	0.05	0.12	0.39	0.05	0.12	0.39	0.13	0.31	1.01	7.0%
J1	2.4	0.26	0.89	0.90	0.96	2.14	0.05	0.12	0.39	0.14	0.20	0.45	0.34	0.49	1.08	16.5%
J2	0.4	0.00	0.89	0.90	0.96	0.40	0.05	0.12	0.39	0.05	0.12	0.39	0.02	0.05	0.16	7.0%
K	3.30	0.55	0.89	0.90	0.96	2.75	0.05	0.12	0.39	0.19	0.25	0.49	0.63	0.83	1.60	24.2%
L	3.90	0.20	0.89	0.90	0.96	3.70	0.06	0.14	0.40	0.10	0.18	0.43	0.40	0.70	1.67	15.1%
M	0.54	0.38	0.89	0.90	0.96	0.16	0.05	0.12	0.39	0.64	0.67	0.79	0.34	0.36	0.43	65.1%
N	0.55	0.30	0.89	0.90	0.96	0.25	0.05	0.12	0.39	0.51	0.55	0.70	0.28	0.30	0.39	52.7%
O	0.61	0.00	0.89	0.90	0.96	0.61	0.05	0.12	0.39	0.05	0.12	0.39	0.03	0.07	0.24	7.0%

LEGEND

DESCRIPTION	SYMBOL
EXISTING GROUND CONTOUR	6910
PROPOSED FINISHED CONTOUR	6910
BASIN BOUNDARY	
DESIGN POINT	1
PIPE RUN	8
BASIN IDENTIFIER / AREA IN ACRES	BB / 10.0
EXISTING DIRECTION OF FLOW	
EXISTING/PROP. STORM SEWER	
WETLAND DELINEATION	

CLASSIC CONSULTING ENGINEERS & SURVEYORS
619 N. Cascade Avenue, Suite 200
Colorado Springs, Colorado 80903
(719)785-0790
(719)785-0799 (Fax)

RETREAT AT TIMBERRIDGE FILING NO. 3
FINAL DRAINAGE REPORT
DEVELOPED DRAINAGE MAP

DESIGNED BY	MAW	SCALE		DATE	1/30/24
DRAWN BY	MAW	(H) 1"= 100'		SHEET 2	OF 2
CHECKED BY		(V) 1"= N/A		JOB NO.	1185.30

N:\118530\REPORTS\FDR\118530FDR DM.dwg, 1/31/2024 9:55:30 AM, 1:1