THIS AND ANY OTHER ELECTRONIC MEDIA COUNTERPART IS AN INSTRUMENT OF SERVICE PREPARED BY MERRICK AND COMPANY FOR A DEFINED PROJECT. IT IS NOT INTENDED OR REPRESENTED TO BE SUITABLE FOR REUSE IN WHOLE OR IN PART ON EXTENSIONS OF THE PROJECT OR ON ANY OTHER PROJECT. ANY REUSE WITHOUT WRITTEN VERIFICATION OR ADAPTATION BY MERRICK AND COMPANY FOR THE SPECIFIC PURPOSE INTENDED WILL BE AT THE USER'S SOLE RISK AND WITHOUT LIABILITY OR LIABILITY OR LOSS EXPOSURE TO MERRICK AND COMPANY.

MOUNTAIN VIEW ACADEMY - CIVIL CONSTRUCTION DOCUMENTS

TRACT H, CLAREMONT RANCH - SECTION 4, FILING NO. 4
LOCATED IN THE NORTHEAST QUARTER OF SECTION 4
TOWNSHIP 14 SOUTH, RANGE 65 WEST OF THE SIXTH PRINCIPAL MERIDIAN
COUNTY OF EL PASO, STATE OF COLORADO
7.88 ACRES

This is not a site development plan. Contact the Planner (Lindsay Darden) for requirements.

For an example site plan:
https://epcdevplanreview.com/Public/ProjectDetails/100058

Submit this document as Construction Drawings.

PROPERTY DESCRIPTION PER SURVEY:

TRACT H, CLAREMONT RANCH-SECTION 4 FILING NO. 4, COUNTY OF EL PASO, STATE OF COLORADO.

BENCHMARK:

ELEVATIONS ARE BASED UPON THE FIMS MONUMENT BL05, A 3-1/4" DIA. CAP MARKED "BL05" IN A RANGE BOX. ELEVATION = 6158.40 NAVD29 DATUM.

BASIS OF BEARING:

BEARINGS ARE ASSUMED AND ARE BASED UPON THE NORTH LINE OF THE NORTHEAST QUARTER OF SAID SECTION 4, AS BEARING S89°13'38"W BETWEEN THE NORTHEAST CORNER OF SAID SECTION 4, BEING A 2" DIA. STEEL PIPE WITH A 2-1/2" ALUMINUM CAP STAMPED LS# 17664 AND THE NORTH QUARTER CORNER OF SAID SECTION 4, BEING A FOUND #6 REBAR WITH A 3-1/4" ALUMINUM CAP STAMPED, LS# 4842.

500' 0 250' 500' 1000'
1" = 500' HOR.

PROJECT DIRECTORY

WATER AND SEWER DISTRICT

CHEROKEE METROPOLITAN DISTRICTS
6250 PALMER PARK BOULEVARD
COLORADO SPRINGS, CO 80915
JEFF MUNGER
P: 719-597-5080

PUBLIC WORKS DEPARTMENT

EL PASO COUNTY DEPARTMENT OF PUBLIC WORKS
3275 AKERS DRIVE
COLORADO SPRING, CO 80922
SCOT CUTHBERTSON
P: 719-520-6460

FIRE

FALCON FIRE PROTECTION DISTRICT
7030 OLD MERIDIAN ROAD
PEYTON, CO 80831
TRENT HARWIG
P: 719-495-4050

PLANNING DEPARTMENT

EL PASO COUNTY PLANNING & COMMUNITY DEVELOPMENT
2880 INTERNATIONAL CIRCLE, SUITE 110
COLORADO SPRINGS, CO 80910
LINDSAY DARDEN
P: 719-520-6302
GILBERT LaFORCE, P.E.
P: 719-520-7945

OWNER/DEVELOPER

NATIONAL HERITAGE ACADEMIES
3850 BROADMOOR SE
GRAND RAPIDS, MI 49512
JACQUES SOUMIS
P: 616-285-1589

CIVIL ENGINEER

MERRICK & COMPANY
5970 GREENWOOD PLAZA BLVD.
GREENWOOD VILLAGE, CO 80111
SCOTT ZIMMERMANN, P.E.
P:303-353-3637

SURVEYOR

MERRICK & COMPANY
5970 GREENWOOD PLAZA BLVD.
GREENWOOD VILLAGE, CO 80111
JOHN A. WILHELM
P: 303-353-3505

ABBREVIATIONS:

EX	EXISTING
STM	STORM
RCP	REINFORCED CONCRETE PIPE
SRVC	SERVICE
O.D.	OUTSIDE DIAMETER
W/	WITH
ELEC	ELECTRIC
DIP	DUCTILE IRON PIPE
STL	STEEL
BFP	BACK FLOW PREVENTER
T/P	TOP OF PIPE
ROW	RIGHT-OF-WAY
KB	KICK BLOCK
TYP	TYPICAL
RP	REDUCED PRESSURE
WTR	WATER
SAN	SANITARY
SWR	SEWER
VERT	VERTICAL

Sheet List Table

Sheet Number	Sheet Title
1	COVER SHEET
2	GENERAL NOTES
3	EXISTING CONDITIONS PLAN
4	SITE PLAN
5	HORIZONTAL CONTROL PLAN
6	HORIZONTAL CONTROL PLAN TABLES
7	SIGNAGE AND STRIPING
8	OVERALL UTILITY EXHIBIT
9	OVERALL GRADING PLAN
10	DETAIL GRADING PLAN
11	DETAIL GRADING PLAN
12	DETAIL GRADING PLAN
13	DETAIL GRADING PLAN
14	POND GRADING PLAN
15	DRAINAGE DETAILS
16	STORM PLAN AND PROFILE
17	DOWNSPOUT PLAN
18	STANDARD DETAILS
19	STANDARD DETAILS
20	STANDARD DETAILS

DESIGN ENGINEER'S STATEMENT:

THESE DETAILED PLANS AND SPECIFICATIONS WERE PREPARED UNDER MY DIRECTION AND SUPERVISION. SAID PLANS AND SPECIFICATIONS HAVE BEEN PREPARED ACCORDING TO THE CRITERIA ESTABLISHED BY THE COUNTY FOR DETAILED ROADWAY, DRAINAGE, GRADING AND EROSION CONTROL PLANS AND SPECIFICATIONS, AND SAID PLANS AND SPECIFICATIONS ARE IN CONFORMITY WITH APPLICABLE MASTER DRAINAGE PLANS AND MASTER TRANSPORTATION PLANS. SAID PLANS AND SPECIFICATIONS MEET THE PURPOSES FOR WHICH THE PARTICULAR ROADWAY AND DRAINAGE FACILITIES ARE DESIGNED AND ARE CORRECT TO THE BEST OF MY KNOWLEDGE AND BELIEF. I ACCEPT RESPONSIBILITY FOR ANY LIABILITY CAUSED BY ANY NEGLIGENT ACTS, ERRORS OR OMISSIONS ON MY PART IN PREPARATION OF THESE DETAILED PLANS AND SPECIFICATIONS.

SCOTT ZIMMERMANN, P.E. #38571 DATE

OWNER/DEVELOPER'S STATEMENT:

I, THE OWNER/DEVELOPER HAVE READ AND WILL COMPLY WITH ALL OF THE REQUIREMENTS SPECIFIED IN THESE DETAILED PLANS AND SPECIFICATIONS.

JACQUES SOUMIS DATE
NATIONAL HERITAGE ACADEMIES
3850 BROADMOOR SE
GRAND RAPIDS, MI 49512

EL PASO COUNTY:

COUNTY PLAN REVIEW IS PROVIDED ONLY FOR GENERAL CONFORMANCE WITH COUNTY DESIGN CRITERIA. THE COUNTY IS NOT RESPONSIBLE FOR THE ACCURACY AND ADEQUACY OF THE DESIGN, DIMENSIONS, AND/OR ELEVATIONS WHICH SHALL BE CONFIRMED AT THE JOB SITE. THE COUNTY THROUGH THE APPROVAL OF THIS DOCUMENT ASSUMES NO RESPONSIBILITY FOR COMPLETENESS AND/OR ACCURACY OF THIS DOCUMENT.

FILED IN ACCORDANCE WITH THE REQUIREMENTS OF THE EL PASO COUNTY LAND DEVELOPMENT CODE, DRAINAGE CRITERIA MANUAL, VOLUMES 1 AND 2, AND ENGINEERING CRITERIA MANUAL AS AMENDED.

IN ACCORDANCE WITH ECM SECTION 1.12, THESE CONSTRUCTION DOCUMENTS WILL BE VALID FOR CONSTRUCTION FOR A PERIOD OF 2 YEARS FROM THE DATE SIGNED BY THE EL PASO COUNTY ENGINEER. IF CONSTRUCTION HAS NOT STARTED WITHIN THOSE 2 YEARS, THE PLANS WILL NEED TO BE RESUBMITTED FOR APPROVAL, INCLUDING PAYMENT OF REVIEW FEES AT THE PLANNING AND COMMUNITY DEVELOPMENT DIRECTORS DISCRETION.

JENNIFER IRVINE, P.E. DATE
COUNTY ENGINEER /
ECM ADMINISTRATOR

LEGEND:

- PROPOSED FIRE HYDRANT
- 6" F / 6" W — PROPOSED FIRE HYDRANT LINE / PROPOSED 6" WATER LINE
- PROPOSED TEE FITTING
- PROPOSED 90° FITTING
- PROPOSED 45° FITTING
- PROPOSED 22.5° FITTING
- PROPOSED 11.25° FITTING
- PROPOSED VALVE
- PROPOSED METER IN MANHOLE
- PROPOSED STORM INLET
- XFRM — ELECTRIC TRANSFORMER
- EXISTING FIRE HYDRANT
- EXISTING VALVE
- W — EXISTING WATER LINE
- EX TEE FITTING
- EX 90° FITTING
- EX 45° FITTING
- EX 22.5° FITTING
- EX 11.25° FITTING
- EASEMENT
- LOT LINE
- COURTYARD FENCE
- ELECTRIC LIGHT POLE
- PROPOSED SANITARY MANHOLE
- SS — PROPOSED SANITARY
- SIGN STEEL POST
- TELEPHONE BOX
- UT — EXISTING PHONE
- UE — EXISTING ELECTRIC
- SS — EXISTING SANITARY SEWER
- G — EXISTING GAS
- EXISTING STORM SEWER
- OH — EXISTING OVERHEAD ELECTRIC LINE
- EXISTING SANITARY MANHOLE
- EXISTING ELECTRIC POLE
- EXISTING INLET
- ST — EXISTING STORM MANHOLE

Know what's below. Call before you dig.

File Location: Q:\DEN\Projects\0399-00 Mountain View Academy\Design\CDs\Civil\Phase II\on-site\COVER.dwg Plot Date:2/7/2020 5:20 PM Last Saved By: IRYPKEMA

MERRICK®
Engineering | Architecture | Design-Build | Surveying | Planning | Geospatial Solutions
5970 GREENWOOD PLAZA BLVD. GREENWOOD VILLAGE, CO. 80111
303-751-0741
www.merrick.com

NATIONAL HERITAGE ACADEMIES®

REV	REVISION DESCRIPTION	DATE	CHND	CHKD	APPR

TITLE: MOUNTAIN VIEW ACADEMY
CIVIL CONSTRUCTION DOCUMENTS
COVER SHEET

PE STAMP: ISSUED FOR REVIEW
FOR AND ON BEHALF OF MERRICK & COMPANY

JOB NUMBER 65120399
DATE 02/07/2020
SHEET C0.0
1 of 20

THIS AND ANY OTHER ELECTRONIC MEDIA COUNTERPART IS AN INSTRUMENT OF SERVICE PREPARED BY MERRICK AND COMPANY FOR A DEFINED PROJECT. IT IS NOT INTENDED OR REPRESENTED TO BE SUITABLE FOR REUSE IN WHOLE OR IN PART ON EXTENSIONS OF THE PROJECT OR ON ANY OTHER PROJECT. ANY REUSE WITHOUT WRITTEN VERIFICATION OR ADAPTATION BY MERRICK AND COMPANY FOR THE SPECIFIC PURPOSE INTENDED WILL BE AT USER'S SOLE RISK AND WITHOUT LIABILITY OR LOSS EXPOSURE TO MERRICK AND COMPANY.

GENERAL NOTES:

1. ALL CONTRACTORS AND SUBCONTRACTORS SHALL HAVE A SET OF APPROVED CONSTRUCTION DOCUMENTS ON SITE AT ALL TIMES.
2. THE OWNER SHALL BE RESPONSIBLE FOR RECORDING AS-BUILT INFORMATION ON A SET OF RECORD DRAWINGS KEPT ON THE CONSTRUCTION SITE, AND AVAILABLE TO THE LOCAL ENTITY'S INSPECTOR AT ALL TIMES.
3. THE PROJECT PLANS AND SPECIFICATIONS AS SIGNED AND SEALED BY A PROFESSIONAL ENGINEER, FOR AND ON BEHALF OF MERRICK AND COMPANY, REPRESENT THE FINAL CONSTRUCTION DOCUMENTS FOR THIS PROJECT. THE USE OF ANY ELECTRONIC OR OTHER MEDIA PURPORTING TO REPRESENT THE FINAL CONSTRUCTION DOCUMENTS FOR THIS PROJECT SHALL NOT BE RELIED UPON AS FINAL CONSTRUCTION DOCUMENTS. SHOULD THERE BE A CONFLICT BETWEEN SEALED DRAWINGS AND ELECTRONIC OR OTHER MEDIA FILES, THE SEALED DRAWINGS SHALL GOVERN. EACH USER OF ANY ELECTRONIC OR OTHER MEDIA WAIVES AND RELEASES MERRICK FROM ALL ACTIONS, CLAIMS, DAMAGES, ACTIONS, OBLIGATIONS AND LIABILITIES OF ANY KIND OR NATURE WITH RESPECT TO THE ELECTRONIC OR OTHER MEDIA FILES.
4. NOTHING CONTAINED IN THE CONTRACT DOCUMENTS SHALL CREATE, NOR SHALL BE CONSTRUED TO CREATE ANY CONTRACTUAL RELATIONSHIP BETWEEN THE ENGINEER AND THE CONTRACTOR OR ANY SUBCONTRACTOR.
5. THE PROJECT PLANS AND SPECIFICATIONS ARE INTENDED TO PROVIDE THE COMPLETED PROJECT IN A COMPLETE AND OPERABLE CONDITION. THE CONTRACTOR SHALL FURNISH AND INSTALL ALL MATERIALS AND PROVIDE ALL LABOR NECESSARY TO COMPLETE THE PROJECT IN A NEAT AND WORKMANLIKE MANNER, INCLUDING ALL INCIDENTALS NECESSARY TO COMPLETE THE WORK, WITHOUT ADDITIONAL COST TO THE OWNER.
6. UPON COMPLETION OF CONSTRUCTION, THE SITE SHALL BE CLEANED AND RESTORED TO A CONDITION EQUAL TO, OR BETTER THAN, THAT WHICH EXISTED BEFORE CONSTRUCTION, OR TO THE GRADES AND CONDITION AS REQUIRED BY THESE PLANS. EXISTING FENCES, TREES, STREETS, SIDEWALKS, CURBS AND GUTTERS, LANDSCAPING, STRUCTURES, AND IMPROVEMENTS DESTROYED, DAMAGED OR REMOVED DUE TO CONSTRUCTION OF THIS PROJECT SHALL BE REPLACED OR RESTORED IN LIKE KIND AT THE OWNER'S EXPENSE, UNLESS OTHERWISE INDICATED ON THESE PLANS.
7. DEVIATIONS FROM THESE PLANS AND SPECIFICATIONS WITHOUT PRIOR WRITTEN APPROVAL OF THE OWNER OR HIS DESIGNATED REPRESENTATIVE MAY CAUSE THE WORK TO BE DEEMED UNACCEPTABLE.
8. MERRICK & COMPANY IS NOT RESPONSIBLE FOR CONSTRUCTION MEANS, METHODS, TECHNIQUES, SEQUENCES OR PROCEDURES OR FOR SAFETY PRECAUTIONS OR PROGRAMS UTILIZED IN CONNECTION WITH THE WORK. MERRICK WILL NOT BE RESPONSIBLE FOR THE CONTRACTOR'S FAILURE TO CARRY OUT THE WORK IN ACCORDANCE WITH THE CONTRACT DOCUMENTS.
9. WHEN APPLICABLE, THE OWNER SHALL HAVE ONSITE AT ALL TIMES, EACH OF THE FOLLOWING:
   - 9.a. THE NOTICE OF INTENT (NOI)
   - 9.b. BEST MANAGEMENT PRACTICES (BMP) MAINTENANCE FOLDER
   - 9.c. UP TO DATE STORMWATER MANAGEMENT PLAN (SWMP) THAT ACCURATELY REPRESENTS CURRENT FIELD CONDITIONS
   - 9.d. ONE (1) SIGNED COPY OF THE APPROVED PLANS
   - 9.e. ONE (1) COPY OF THE APPROPRIATE STANDARDS AND SPECIFICATIONS
   - 9.f. A COPY OF ANY PERMITS AND EXTENSION AGREEMENTS NEEDED FOR THE JOB.
10. ALL MATERIALS, WORKMANSHIP, AND CONSTRUCTION OF PUBLIC IMPROVEMENTS SHALL MEET OR EXCEED THE STANDARDS AND SPECIFICATIONS SET FORTH IN THE EL PASO COUNTY STANDARDS AND APPLICABLE STATE AND FEDERAL REGULATIONS. WHERE THERE IS CONFLICT BETWEEN THESE PLANS AND THE SPECIFICATIONS, OR ANY APPLICABLE STANDARDS, THE MOST RESTRICTIVE STANDARD SHALL APPLY.
11. ALL WORK SHALL BE INSPECTED AND APPROVED BY THE LOCAL ENTITY.
12. DO NOT SCALE DRAWINGS. DIMENSIONS FOR LAYOUT AND CONSTRUCTION ARE NOT TO BE SCALED FROM ANY DRAWING. IF PERTINENT DIMENSIONS ARE NOT SHOWN, CONTACT THE DESIGNER FOR CLARIFICATION, AND ANNOTATE THE DIMENSION ON THE AS-BUILT RECORD DRAWINGS.
13. THE BOUNDARY AND TOPOGRAPHIC INFORMATION ON THESE PLANS IS TAKEN FROM FIELD SURVEYS PREPARED BY MERRICK & CO, DATED SEPTEMBER 20, 2019.
14. THE CONTRACTOR SHALL COMPLY WITH THE RECOMMENDATIONS OF THE GEOTECHNICAL REPORT FOR MOUNTAIN VIEW ACADEMY PREPARED BY TERRACON CONSULTANTS, INC., DATED NOVEMBER 8, 2019.
15. THE CONTRACTOR SHALL OBTAIN ALL PERMITS NECESSARY TO COMPLETE THE WORK AND SHALL COMPLY WITH ALL LOCAL, STATE AND FEDERAL REGULATIONS. A COPY OF ALL PERMITS SHALL BE MAINTAINED ON-SITE AT ALL TIMES.
16. AFTER ACCEPTANCE BY THE LOCAL ENTITY, PUBLIC IMPROVEMENTS DEPICTED IN THESE PLANS SHALL BE GUARANTEED TO BE FREE FROM MATERIAL AND WORKMANSHIP DEFECTS FOR A PERIOD OF TWO YEARS FROM THE DATE OF ACCEPTANCE.
17. THESE PUBLIC IMPROVEMENT CONSTRUCTION PLANS SHALL BE VALID FOR A PERIOD OF THREE YEARS FROM THE DATE OF APPROVAL BY THE LOCAL ENTITY ENGINEER. USE OF THESE PLANS AFTER THE EXPIRATION DATE WILL REQUIRE A NEW REVIEW AND APPROVAL PROCESS BY THE LOCAL ENTITY PRIOR TO COMMENCEMENT OF ANY WORK SHOWN IN THESE PLANS.
18. NO WORK MAY COMMENCE WITHIN ANY IMPROVED PUBLIC RIGHT-OF-WAY UNTIL A RIGHT-OF-WAY PERMIT OR DEVELOPMENT CONSTRUCTION PERMIT IS OBTAINED, IF APPLICABLE. THE OWNER SHALL SUBMIT A CONSTRUCTION TRAFFIC CONTROL PLAN, IN ACCORDANCE WITH MUTCD, TO THE APPROPRIATE RIGHT-OF-WAY AUTHORITY, (LOCAL ENTITY, COUNTY OR STATE), FOR APPROVAL, PRIOR TO ANY CONSTRUCTION ACTIVITIES WITHIN, OR AFFECTING, THE RIGHT-OF-WAY. THE OWNER SHALL BE RESPONSIBLE FOR PROVIDING ANY AND ALL TRAFFIC CONTROL DEVICES AS MAY BE REQUIRED BY THE CONSTRUCTION ACTIVITIES.
19. THE CONTRACTOR IS RESPONSIBLE FOR SAFETY OF ALL PERSONNEL AND EQUIPMENT ON THE PROJECT SITE AT ALL TIMES, AND IS NOT LIMITED TO NORMAL WORKING HOURS. ALL WORK SHALL BE PERFORMED IN ACCORDANCE WITH ALL LOCAL, STATE AND FEDERAL SAFETY AND HEALTH REGULATIONS.
20. IF, DURING THE CONSTRUCTION PROCESS, CONDITIONS ARE ENCOUNTERED WHICH COULD INDICATE A SITUATION THAT IS NOT IDENTIFIED IN THE PLANS OR SPECIFICATIONS, THE OWNER SHALL CONTACT THE DESIGNER AND THE LOCAL ENTITY ENGINEER IMMEDIATELY.
21. ALL REFERENCES TO ANY PUBLISHED STANDARDS SHALL REFER TO THE LATEST REVISION OF SAID STANDARD, UNLESS SPECIFICALLY STATED OTHERWISE.
22. THERE SHALL BE NO WORK PERFORMED ON WEEKENDS OR HOLIDAYS, UNLESS ACCEPTED AND APPROVED IN WRITING AND IN ADVANCE BY THE OWNER, ENGINEER, AND LOCAL JURISDICTION.
23. MAINTAIN EMERGENCY VEHICLE ACCESS TO AND THROUGH THE PROJECT SITE AT ALL TIMES.
24. ACCESS TO PRIVATE PROPERTY AND BUSINESSES SHALL BE MAINTAINED AT ALL TIMES. CONTRACTOR TO PROVIDE ALTERNATIVE MEANS OF INGRESS AND EGRESS TO PRIVATE PROPERTY AND BUSINESS LOCATIONS AS NECESSARY TO PROVIDE FOR THE TIMELY COMPLETION OF THE PROJECT.
25. THE CONTRACTOR SHALL CALL THE NATIONWIDE UTILITY CONTACT NUMBER (811) OR LOCAL UTILITY LOCATE SERVICE, TO REQUEST LOCATES OF ALL UNDERGROUND UTILITIES AT LEAST 72 HOURS PRIOR TO COMMENCEMENT OF ANY LAND DISTURBING ACTIVITY.
26. THE CONTRACTOR SHALL BE RESPONSIBLE FOR THE LOCATION AND PROTECTION OF ALL EXISTING UTILITIES, INCLUDING DEPTH. THE TYPE, SIZE, LOCATION AND NUMBER OF ALL KNOWN UNDERGROUND UTILITIES ARE APPROXIMATE ONLY AND ARE NOT RELIABLE FOR CONSTRUCTION PURPOSES. THE UTILITIES SHOWN ON THE PLANS ARE FROM THE BEST AVAILABLE INFORMATION AND MAY NOT INCLUDE ALL UTILITIES THAT EXIST ON THE PROJECT SITE. IT SHALL BE THE RESPONSIBILITY OF THE OWNER TO VERIFY THE EXISTENCE AND LOCATION OF ALL UNDERGROUND UTILITIES ALONG THE ROUTE OF THE WORK BEFORE COMMENCING NEW CONSTRUCTION. THE OWNER SHALL BE RESPONSIBLE FOR UNKNOWN UNDERGROUND UTILITIES.
27. APPROXIMATE WHEN SHOWN ON THE DRAWINGS. ALL UTILITY INSTALLATIONS WITHIN OR ACROSS THE ROADBED OF NEW RESIDENTIAL ROADS MUST BE COMPLETED PRIOR TO THE FINAL STAGES OF ROAD CONSTRUCTION. FOR THE PURPOSES OF THESE STANDARDS, ANY WORK EXCEPT C/G ABOVE THE SUBGRADE IS CONSIDERED FINAL STAGE WORK. ALL SERVICE LINES MUST BE STUBBED TO THE PROPERTY LINES AND MARKED SO AS TO REDUCE THE EXCAVATION NECESSARY FOR BUILDING CONNECTIONS.
28. A STATE CONSTRUCTION DEWATERING WASTEWATER DISCHARGE PERMIT IS REQUIRED IF DEWATERING IS REQUIRED IN ORDER TO INSTALL UTILITIES OR BEFORE WATER IS DISCHARGED INTO A STORM SEWER, CHANNEL, IRRIGATION DITCH OR ANY WATERS OF THE UNITED STATES.
29. THE OWNER SHALL COORDINATE AND COOPERATE WITH THE LOCAL ENTITY, AND ALL UTILITY COMPANIES INVOLVED, WITH REGARD TO RELOCATIONS, ADJUSTMENTS, EXTENSIONS AND REARRANGEMENTS OF EXISTING UTILITIES DURING CONSTRUCTION, AND TO ASSURE THAT THE WORK IS ACCOMPLISHED IN A TIMELY FASHION AND WITH A MINIMUM DISRUPTION OF SERVICE. THE OWNER SHALL BE RESPONSIBLE FOR CONTACTING, IN ADVANCE, ALL PARTIES AFFECTED BY ANY DISRUPTION OF ANY UTILITY SERVICE AS WELL AS THE UTILITY COMPANIES. IN GENERAL, STORM SEWER AND SANITARY SEWER SHOULD BE CONSTRUCTED PRIOR TO INSTALLATION OF THE WATER LINES AND DRY UTILITIES.
30. NO WORK MAY COMMENCE WITHIN ANY PUBLIC STORM WATER, SANITARY SEWER OR POTABLE WATER SYSTEM UNTIL THE OWNER NOTIFIES THE UTILITY PROVIDER. NOTIFICATION SHALL BE A MINIMUM OF TWO (2) WORKING DAYS PRIOR TO COMMENCEMENT OF ANY WORK. AT THE DISCRETION OF THE WATER UTILITY PROVIDER, A PRE-CONSTRUCTION MEETING MAY BE REQUIRED PRIOR TO COMMENCEMENT OF ANY WORK.
31. THE CONTRACTOR SHALL BE RESPONSIBLE FOR PROTECTING ALL UTILITIES DURING CONSTRUCTION AND FOR COORDINATING WITH THE APPROPRIATE UTILITY COMPANY FOR ANY UTILITY CROSSINGS REQUIRED.
32. THE CONTRACTOR SHALL VERIFY SITE CONDITIONS, EXISTING TOPOGRAPHIC DATA, AND LOCATIONS OF ALL UTILITIES PRIOR TO INITIATING CONSTRUCTION. THE CONTRACTOR SHALL PROTECT ALL EXISTING UTILITIES AND STRUCTURES ON THE PROJECT SITE. ANY DAMAGE TO EXISTING UTILITIES OR STRUCTURES, WHETHER SHOWN OR NOT ON THE PROJECT PLANS SHALL BE REPAIRED OR REPLACED AT THE CONTRACTOR'S EXPENSE AT NO ADDITIONAL COST TO THE OWNER. NOTIFY ENGINEER AND OWNER OF ANY DISCREPANCIES FOUND PRIOR TO INITIATING ANY WORK.
33. ANY DISRUPTION IN UTILITIES SHALL BE COORDINATED AT LEAST 48 HOURS IN ADVANCE WITH THE UTILITY OWNER, PROJECT OWNER, EMERGENCY PROVIDERS, ALL IMPACTED LOCAL RESIDENTS, AND IMPACTED BUSINESS OWNERS. METHOD OF NOTIFICATION SHALL BE SUBJECT TO APPROVAL OF THE PROJECT OWNER AND AFFECTED UTILITY.
34. THE CONTRACTOR IS RESPONSIBLE FOR RESTORATION OF SURFACE CONDITIONS DISTURBED BY CONSTRUCTION ACTIVITIES TO THE SATISFACTION OF THE OWNER, PROPERTY OWNER, AFFECTED UTILITY, AND/OR LOCAL JURISDICTION. ALL SURFACE AND UTILITY RESTORATION SHALL BE REPLACED WITH LIKE KIND, SIZE, AND TYPE OF IMPROVEMENT THAT EXISTED PRIOR TO INITIATING CONSTRUCTION AT NO ADDITIONAL EXPENSE TO THE PROJECT OWNER.
35. OVERLOT GRADING CONSTRUCTION MUST COMPLY WITH THE STATE OF COLORADO PERMITTING PROCESS FOR "STORM WATER DISCHARGES ASSOCIATED WITH CONSTRUCTION ACTIVITY." CONTACT THE COLORADO DEPARTMENT OF PUBLIC HEALTH & ENVIRONMENT, WATER QUALITY CONTROL DIVISION, PHONE (303) 692-3500.
36. PAVING SHALL NOT START UNTIL A SOILS REPORT AND PAVEMENT DESIGN IS ACCEPTED BY THE LOCAL ENTITY ENGINEER AND SUBGRADE COMPACTION TESTS ARE TAKEN AND ACCEPTED BY THE LOCAL ENTITY ENGINEER.
37. THE OWNER SHALL BE RESPONSIBLE FOR OBTAINING SOILS TESTS WITHIN THE PUBLIC RIGHT- OF-WAY AFTER RIGHT OF WAY GRADING AND ALL UTILITY TRENCH WORK IS COMPLETE. IF THE FINAL SOILS/PAVEMENT DESIGN REPORT DOES NOT CORRESPOND WITH THE RESULTS OF THE ORIGINAL GEOTECHNICAL REPORT, THE OWNER SHALL BE RESPONSIBLE FOR A RE-DESIGN OF THE SUBJECT PAVEMENT SECTION OR, THE OWNER MAY USE THE LOCAL ENTITY'S DEFAULT PAVEMENT THICKNESS SECTION(S). REGARDLESS OF THE OPTION USED, ALL FINAL SOILS/PAVEMENT DESIGN REPORTS SHALL BE PREPARED BY A LICENSED PROFESSIONAL ENGINEER. THE FINAL REPORT SHALL BE SUBMITTED TO THE INSPECTOR A MINIMUM OF TEN (10) WORKING DAYS PRIOR TO PLACEMENT OF BASE AND ASPHALT. PLACEMENT OF BASE AND ASPHALT SHALL NOT OCCUR UNTIL THE ENGINEERING DIVISION APPROVES THE FINAL REPORT.
38. ALL ROAD CONSTRUCTION IN AREAS DESIGNATED AS WILD FIRE HAZARD AREAS SHALL BE DONE IN ACCORDANCE WITH THE CONSTRUCTION CRITERIA AS ESTABLISHED IN THE WILD FIRE HAZARD AREA MITIGATION REGULATIONS IN FORCE AT THE TIME OF FINAL PLAT APPROVAL.
39. THE ENGINEER MAKES NO REPRESENTATION OR GUARANTEE REGARDING EARTHWORK QUANTITIES OR THAT THE EARTHWORK FOR THIS PROJECT WILL BALANCE DUE TO VARIOUS FIELD CONDITIONS, CHANGING SOIL TYPES, ALLOWABLE CONSTRUCTION TOLERANCES AND CONSTRUCTION METHODS THAT ARE BEYOND THE CONTROL OF THE ENGINEER.
40. TRAFFIC CONTROL STANDARDS FOR THIS PROJECT SHALL COMPLY WITH THE MANUAL ON UNIFORM TRAFFIC CONTROL DEVICES, LATEST EDITION. A TRAFFIC CONTROL PLAN APPROVED BY THE LOCAL ENTITY EXERCISING JURISDICTION SHALL BE OBTAINED BY THE CONTRACTOR AT NO ADDITIONAL EXPENSE TO THE OWNER.
41. THE OWNER SHALL SUBMIT A CONSTRUCTION TRAFFIC CONTROL PLAN, IN ACCORDANCE WITH MUTCD, TO THE APPROPRIATE RIGHT-OF-WAY AUTHORITY. (LOCAL ENTITY, COUNTY OR STATE), FOR APPROVAL, PRIOR TO ANY CONSTRUCTION ACTIVITIES WITHIN, OR AFFECTING, THE RIGHT-OF-WAY. THE OWNER SHALL BE RESPONSIBLE FOR PROVIDING ANY AND ALL TRAFFIC CONTROL DEVICES AS MAY BE REQUIRED BY THE CONSTRUCTION ACTIVITIES.
42. SAW CUT ALL JOINTS IN EXISTING PAVEMENTS. SAW CUT JOINTS IN CURB AND GUTTER SECTIONS SHALL BE CONTINUOUS THROUGH THE CURB HEAD.
43. INSTALL SEDIMENTATION AND EROSION CONTROL MEASURES PRIOR TO INITIATING ANY WORK ON THE PROJECT SITE. MAINTAIN ALL EROSION CONTROL MEASURES UNTIL FINAL ACCEPTANCE OF THE PROJECT BY THE OWNER.
44. ALL STRUCTURAL EROSION CONTROL MEASURES SHALL BE INSTALLED, AT THE LIMITS OF CONSTRUCTION AND AT AREAS WITH DISTURBED SOIL, ON- OR OFF-SITE, PRIOR TO ANY OTHER GROUND-DISTURBING ACTIVITY. ALL EROSION CONTROL MEASURES SHALL BE MAINTAINED IN GOOD REPAIR BY THE OWNER, UNTIL SUCH TIME AS THE ENTIRE DISTURBED AREAS IS STABILIZED WITH HARD SURFACE OR LANDSCAPING. TO MITIGATE EROSION, THE OWNER SHALL USE STANDARD EROSION CONTROL TECHNIQUES DESCRIBED IN THE URBAN STORM DRAINAGE CRITERIA MANUAL, VOLUME 3 - BEST MANAGEMENT PRACTICES, AS PUBLISHED BY THE URBAN DRAINAGE AND FLOOD CONTROL DISTRICT (UDFCD).
45. THE OWNER SHALL BE RESPONSIBLE FOR INSURING THAT NO MUD OR DEBRIS SHALL BE TRACKED ONTO THE EXISTING PUBLIC STREET SYSTEM. MUD AND DEBRIS MUST BE REMOVED BY THE END OF EACH WORKING DAY BY AN APPROPRIATE MECHANICAL METHOD (I.E. MACHINE BROOM SWEEP, LIGHT DUTY FRONT-END LOADER, ETC.) OR AS APPROVED BY THE LOCAL ENTITY STREET INSPECTOR.
46. ALL WASTE MATERIALS SHALL BE PROPERLY DISPOSED OF IN AN APPROVED LANDFILL PERMITTED TO ACCEPT THAT PARTICULAR TYPE OF WASTE.
47. WHERE CONFLICTS EXIST BETWEEN GENERAL NOTES AND THE NOTES OF SPECIFIC GOVERNING JURISDICTIONS, THE GREATER STANDARD OR REQUIREMENT SHALL PREVAIL. WHERE CONFLICTS BETWEEN THE PLANS AND SPECIFICATIONS AND THE NOTES OR REQUIREMENTS OF SPECIFIC GOVERNING JURISDICTIONS OCCUR, THE CONTRACTOR SHALL NOTIFY THE ENGINEER OR OWNER IMMEDIATELY AND REQUEST CLARIFICATION.

Know what's **below.**
Call before you dig.

File Location:Q:\DEN\Projects\0399-00 Mountain View Academy\Design\CDs\Civil\Phase II\on-site\COVER.dwg Plot Date:2/7/2020 3:20 PM Last Saved By: IRYPKEMA

MERRICK®
Engineering | Architecture | Design-Build | Surveying | Planning | Geospatial Solutions
5970 GREENWOOD PLAZA BLVD. GREENWOOD VILLAGE, CO. 80111
303-751-0741
www.merrick.com

NATIONAL HERITAGE ACADEMIES®

REV	REVISION DESCRIPTION	DATE	CHND	CHKD	APPR

TITLE:
MOUNTAIN VIEW ACADEMY
CIVIL CONSTRUCTION DOCUMENTS
GENERAL NOTES

PE STAMP

ISSUED FOR REVIEW

FOR AND ON BEHALF OF MERRICK & COMPANY

JOB NUMBER: 65120399
DATE: 02/07/2020
SHEET: C0.1
2 of 20

THIS AND ANY OTHER ELECTRONIC MEDIA COUNTERPART IS AN INSTRUMENT OF SERVICE PREPARED BY MERRICK AND COMPANY FOR A DEFINED PROJECT. IT IS NOT INTENDED OR REPRESENTED TO BE SUITABLE FOR REUSE IN WHOLE OR IN PART ON EXTENSIONS OF THE PROJECT OR ON ANY OTHER PROJECT. ANY REUSE WITHOUT WRITTEN VERIFICATION OR ADAPTATION BY MERRICK AND COMPANY FOR THE SPECIFIC PURPOSE INTENDED WILL BE AT THE USER'S SOLE RISK AND WITHOUT LIABILITY OR LOSS EXPOSURE TO MERRICK AND COMPANY.

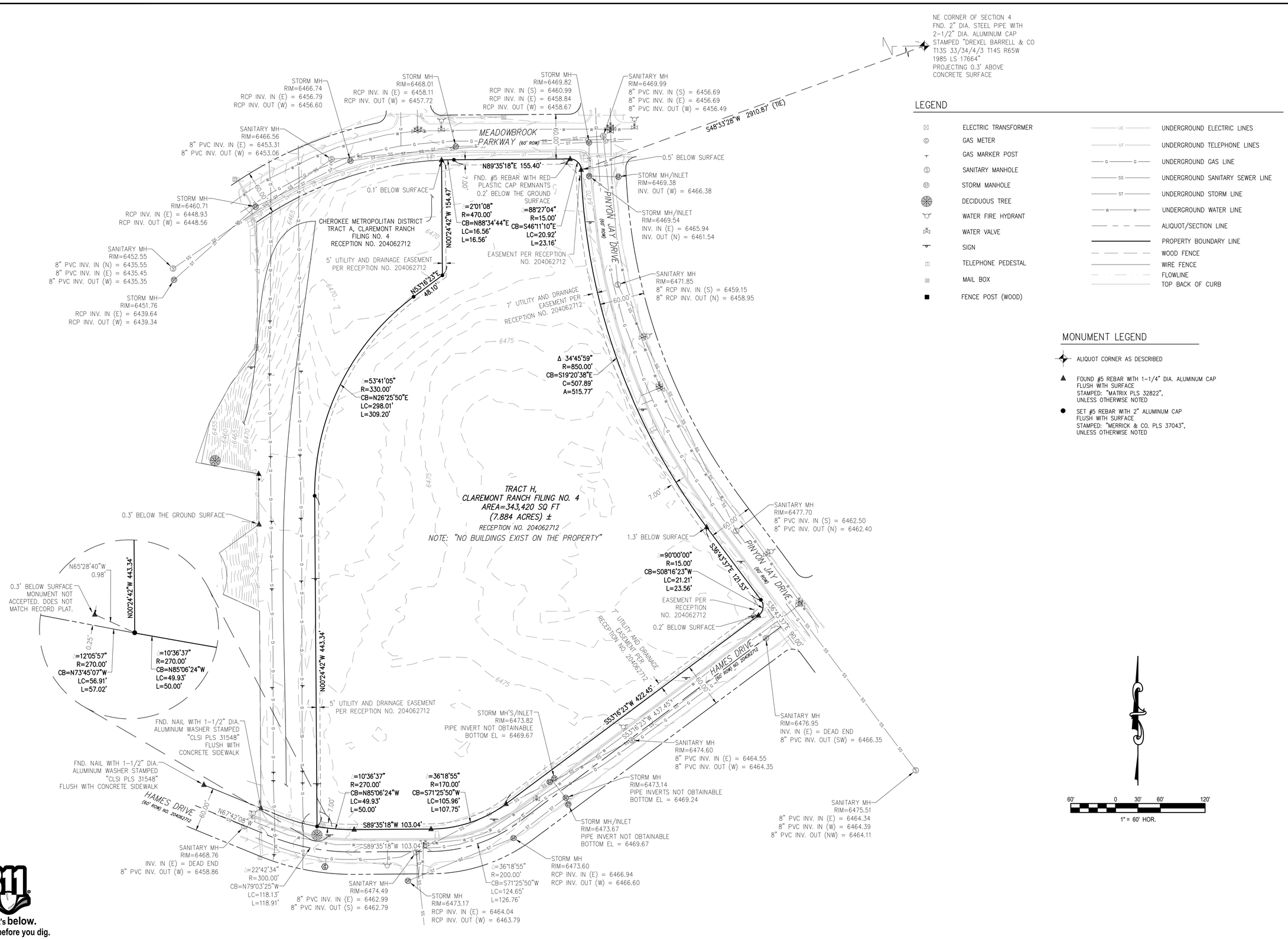

LEGEND

	ELECTRIC TRANSFORMER	UE	UNDERGROUND ELECTRIC LINES
	GAS METER	UT	UNDERGROUND TELEPHONE LINES
	GAS MARKER POST	G G	UNDERGROUND GAS LINE
	SANITARY MANHOLE	SS	UNDERGROUND SANITARY SEWER LINE
	STORM MANHOLE	ST	UNDERGROUND STORM LINE
	DECIDUOUS TREE	W W	UNDERGROUND WATER LINE
	WATER FIRE HYDRANT		ALIQUOT/SECTION LINE
	WATER VALVE		PROPERTY BOUNDARY LINE
	SIGN		WOOD FENCE
	TELEPHONE PEDESTAL		WIRE FENCE
	MAIL BOX		FLOWLINE
	FENCE POST (WOOD)		TOP BACK OF CURB

MONUMENT LEGEND

- ALIQUOT CORNER AS DESCRIBED
- ▲ FOUND #5 REBAR WITH 1-1/4" DIA. ALUMINUM CAP FLUSH WITH SURFACE STAMPED: "MATRIX PLS 32822", UNLESS OTHERWISE NOTED
- ● SET #5 REBAR WITH 2" ALUMINUM CAP FLUSH WITH SURFACE STAMPED: "MERRICK & CO. PLS 37043", UNLESS OTHERWISE NOTED

Know what's **below.** **Call** before you dig.

File Location:Q:\DEN\Projects\0399-00 Mountain View Academy\Design\Cds\Civil\Phase II\on-site\EXISTING CONDITIONS (ALTA).dwg Plot Date:2/7/2020 5:20 PM Last Saved By: IRYPKEMA

MERRICK®
Engineering | Architecture | Design-Build | Surveying | Planning | Geospatial Solutions
5970 GREENWOOD PLAZA BLVD, GREENWOOD VILLAGE, CO, 80111
303-751-0741
www.merrick.com

NATIONAL HERITAGE ACADEMIES®

REV	REVISION DESCRIPTION	DATE	CHND	CHKD	APPR

TITLE
MOUNTAIN VIEW ACADEMY
CIVIL CONSTRUCTION DOCUMENTS
EXISTING CONDITIONS PLAN

PE STAMP
ISSUED FOR REVIEW
FOR AND ON BEHALF OF MERRICK & COMPANY

JOB NUMBER 65120399
DATE 02/07/2020
SHEET C1.0
3 of 20

THIS AND ANY OTHER ELECTRONIC MEDIA COUNTERPART IS AN INSTRUMENT OF SERVICE PREPARED BY MERRICK AND COMPANY FOR A DEFINED PROJECT. IT IS NOT INTENDED OR REPRESENTED TO BE SUITABLE FOR REUSE IN WHOLE OR IN PART ON EXTENSIONS OF THE PROJECT OR ON ANY OTHER PROJECT. ANY REUSE WITHOUT WRITTEN VERIFICATION OR ADAPTATION BY MERRICK AND COMPANY FOR THE SPECIFIC PURPOSE INTENDED WILL BE AT THE USER'S SOLE RISK AND WITHOUT LIABILITY OR LOSS EXPOSURE TO MERRICK AND COMPANY.

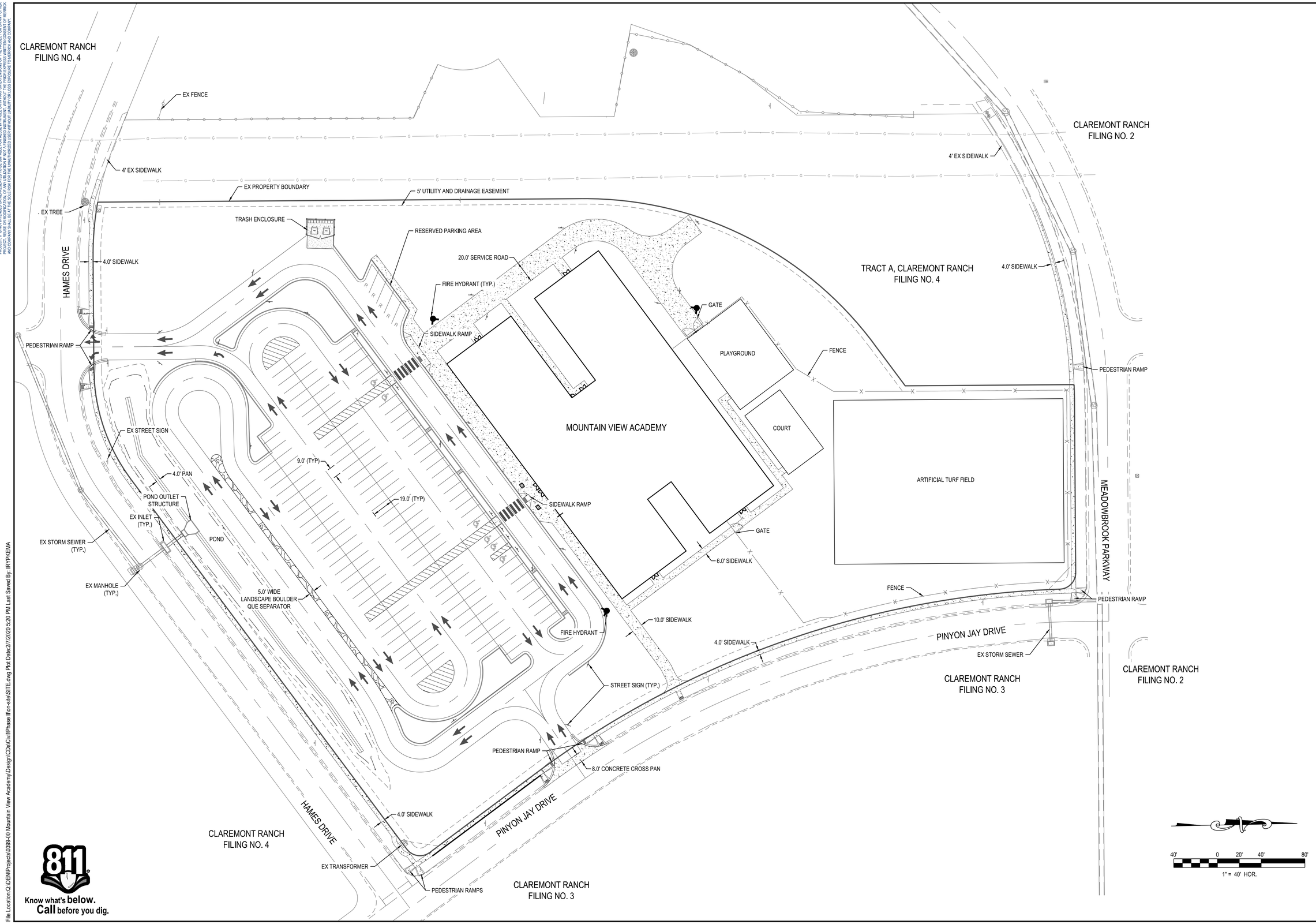

Know what's **below.**
Call before you dig.

File Location:Q:\DEN\Projects\0399-00 Mountain View Academy\Design\CDs\Civil\Phase II\on-site\SITE.dwg Plot Date:2/7/2020 5:20 PM Last Saved By: IRYPKEMA

MERRICK®
Engineering / Architecture / Design-Build / Surveying / Planning / Geospatial Solutions
5970 GREENWOOD PLAZA BLVD. GREENWOOD VILLAGE, CO. 80111
303-751-0741
www.merrick.com

NATIONAL HERITAGE ACADEMIES®

REV	REVISION DESCRIPTION	DATE	CHND	CHKD	APPR

TITLE:
MOUNTAIN VIEW ACADEMY
CIVIL CONSTRUCTION DOCUMENTS
SITE PLAN

PE STAMP

ISSUED FOR REVIEW

FOR AND ON BEHALF OF MERRICK & COMPANY

JOB NUMBER: 65120399
DATE: 02/07/2020
SHEET: C2.0
4 of 20

THIS AND ANY OTHER ELECTRONIC MEDIA COUNTERPART IS AN INSTRUMENT OF SERVICE PREPARED BY MERRICK AND COMPANY FOR A DEFINED PROJECT. IT IS NOT INTENDED OR REPRESENTED TO BE SUITABLE FOR REUSE IN WHOLE OR IN PART ON EXTENSIONS OF THE PROJECT OR ON ANY OTHER PROJECT. ANY REUSE WITHOUT WRITTEN VERIFICATION OR ADAPTATION BY MERRICK AND COMPANY FOR THE SPECIFIC PURPOSE INTENDED WILL BE AT THE USER'S SOLE RISK AND WITHOUT LIABILITY OR LOSS EXPOSURE TO MERRICK AND COMPANY.

BENCHMARK:

ELEVATIONS ARE BASED UPON THE FIMS MONUMENT BL05, A 3-1/4" DIA. CAP MARKED "BL05" IN A RANGE BOX. ELEVATION = 6158.40 NAVD29 DATUM.

BASIS OF BEARING:

BEARINGS ARE ASSUMED AND ARE BASED UPON THE NORTH LINE OF THE NORTHEAST QUARTER OF SAID SECTION 4, AS BEARING S89°13'38"W BETWEEN THE NORTHEAST CORNER OF SAID SECTION 4, BEING A 2" DIA. STEEL PIPE WITH A 2-1/2" ALUMINUM CAP STAMPED LS# 17664 AND THE NORTH QUARTER CORNER OF SAID SECTION 4, BEING A FOUND #6 REBAR WITH A 3-1/4" ALUMINUM CAP STAMPED, LS# 4842.

LEGEND

- DENOTES THE USE OF SPILL CURB
- (Tx) TRANSITION CURB, CATCH TO SPILL

NOTES:

1. ALL CURB AND GUTTER IS CATCH CURB, UNLESS OTHERWISE NOTED.
2. ALL CURB AND GUTTER IS 6" VERTICAL CURB WITH 2" GUTTER.

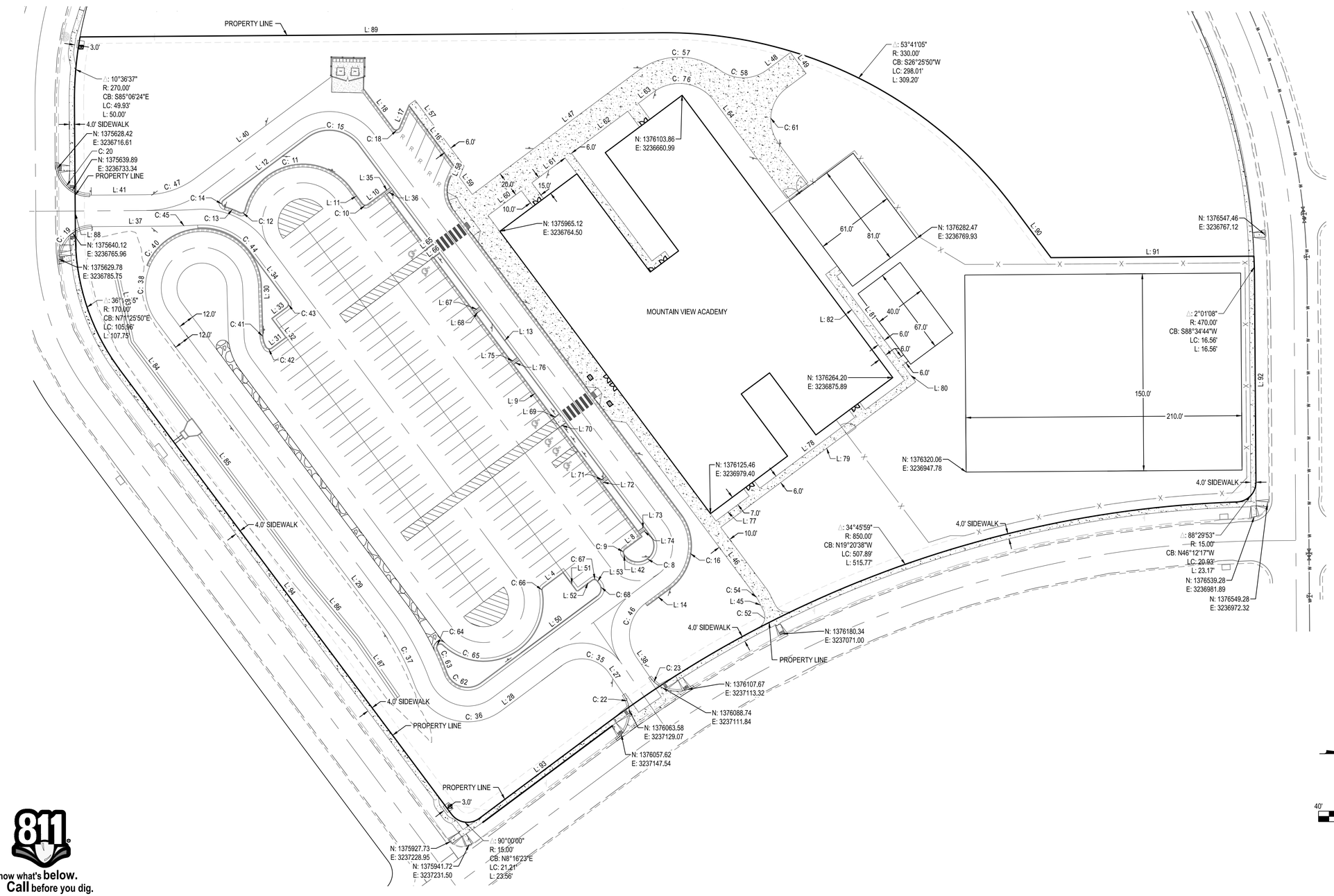

Know what's **below.**
Call before you dig.

File Location:Q:\DEN\Projects\0399-00 Mountain View Academy\Design\CDs\Civil\Phase II\on-site\HCP.dwg Plot Date:2/7/2020 5:20 PM Last Saved By: IRYPKEMA

MERRICK®
Engineering / Architecture / Design-Build / Surveying / Planning / Geospatial Solutions
5970 GREENWOOD PLAZA BLVD. GREENWOOD VILLAGE, CO. 80111
303-751-0741
www.merrick.com

NATIONAL HERITAGE ACADEMIES®

REV	REVISION DESCRIPTION	DATE	CHND	CHKD	APPR

TITLE:

MOUNTAIN VIEW ACADEMY
CIVIL CONSTRUCTION DOCUMENTS
HORIZONTAL CONTROL PLAN

ISSUED FOR REVIEW

FOR AND ON BEHALF OF MERRICK & COMPANY

FILE STAMP

JOB NUMBER: 65120399
DATE: 02/07/2020
SHEET: C2.1
5 of X

THIS AND ANY OTHER ELECTRONIC MEDIA COUNTERPART IS AN INSTRUMENT OF SERVICE PREPARED BY MERRICK AND COMPANY FOR A DEFINED PROJECT. IT IS NOT INTENDED OR REPRESENTED TO BE SUITABLE FOR REUSE IN WHOLE OR IN PART ON EXTENSIONS OF THE PROJECT OR ON ANY OTHER PROJECT. ANY REUSE WITHOUT WRITTEN VERIFICATION OR ADAPTATION BY MERRICK AND COMPANY FOR THE SPECIFIC PURPOSE INTENDED WILL BE AT THE USER'S SOLE RISK AND WITHOUT LIABILITY OR LOSS EXPOSURE TO MERRICK AND COMPANY.

LINE TABLE

LINE #	BEARING	LENGTH	START NORTHING EASTING	END NORTHING EASTING
L: 4	S36° 43' 35"E	18.84'	1376013.304 3237023.897	1375998.206 3237035.162
L: 8	S36° 43' 35"E	16.00'	1376072.972 3236996.846	1376060.148 3237006.414
L: 9	S53° 16' 25"W	327.00'	1376072.972 3236996.846	1375877.427 3236734.756
L: 10	S36° 43' 35"E	16.00'	1375877.427 3236734.756	1375864.603 3236744.324
L: 11	S53° 16' 25"W	15.00'	1375860.405 3236743.714	1375851.435 3236731.691
L: 12	S36° 43' 35"E	79.99'	1375818.740 3236692.887	1375754.628 3236740.721
L: 13	S53° 16' 25"W	371.65'	1376080.173 3236996.464	1375857.926 3236698.585
L: 14	S36° 43' 35"E	21.60'	1376094.373 3237036.400	1376077.058 3237049.318
L: 16	S53° 16' 25"W	57.74'	1375930.548 3236715.653	1375896.023 3236669.379
L: 17	S66° 43' 35"E	17.90'	1375896.023 3236669.379	1375888.951 3236685.820
L: 18	S53° 16' 25"W	37.83'	1375883.791 3236686.429	1375861.171 3236656.112
L: 27	S55° 36' 06"W	19.78'	1376059.409 3237117.112	1376048.233 3237100.789
L: 28	S36° 43' 35"E	57.73'	1376012.655 3237094.875	1375966.384 3237129.397
L: 29	S53° 16' 25"W	284.96'	1375874.376 3237061.773	1375703.973 3236833.380
L: 30	S88° 16' 25"W	37.99'	1375784.562 3236844.279	1375783.417 3236806.311
L: 31	S36° 43' 35"E	13.96'	1375802.750 3236845.370	1375791.558 3236853.720
L: 32	S53° 16' 25"W	18.00'	1375802.750 3236845.370	1375791.986 3236830.943
L: 33	S36° 43' 35"E	14.02'	1375803.207 3236822.571	1375791.967 3236830.957
L: 34	S53° 16' 25"W	47.68'	1375803.818 3236818.372	1375775.307 3236780.159
L: 35	N36° 43' 35"W	6.00'	1375877.427 3236734.756	1375882.236 3236731.168
L: 36	N36° 43' 35"W	6.00'	1375878.623 3236736.359	1375883.432 3236732.771
L: 37	N0° 24' 42"W	61.29'	1375654.490 3236760.961	1375715.783 3236760.520
L: 38	S55° 36' 06"W	18.23'	1376079.345 3237103.747	1376069.048 3237088.709
L: 40	S36° 43' 35"E	129.78'	1375837.370 3236646.549	1375733.350 3236724.157
L: 41	N0° 24' 42"W	43.02'	1375653.108 3236736.970	1375696.129 3236736.661
L: 42	S53° 16' 25"W	1.00'	1376060.136 3237011.414	1376059.538 3237010.613
L: 45	N63° 24' 25"E	8.43'	1376162.045 3237045.813	1376165.818 3237053.349
L: 46	N53° 16' 25"E	164.69'	1376061.245 3236910.058	1376159.727 3237042.054
L: 47	S36° 43' 35"E	157.10'	1376070.111 3236642.500	1375944.192 3236736.448
L: 48	S36° 43' 35"E	22.40'	1376186.289 3236628.341	1376168.336 3236641.735
L: 49	S53° 16' 25"W	20.00'	1376198.249 3236644.371	1376186.289 3236628.341
L: 50	N36° 43' 36"W	110.70'	1375950.836 3237108.558	1376039.558 3237042.363
L: 51	S53° 16' 25"W	18.00'	1376024.068 3237038.324	1376013.304 3237023.897
L: 52	S36° 43' 35"E	14.00'	1376035.289 3237029.952	1376024.068 3237038.324
L: 53	S53° 16' 25"W	2.50'	1376040.983 3237032.566	1376039.488 3237030.563
L: 57	S53° 16' 25"W	62.35'	1375938.002 3236714.774	1375900.715 3236664.797
L: 58	N66° 43' 35"W	9.24'	1375934.352 3236723.260	1375938.002 3236714.774
L: 59	S53° 16' 25"W	16.45'	1375944.192 3236736.448	1375934.352 3236723.260
L: 60	N36° 43' 35"W	31.61'	1375956.152 3236752.478	1375981.491 3236733.573
L: 61	N36° 43' 35"W	31.61'	1375989.506 3236727.593	1376014.845 3236708.687

LINE TABLE

LINE #	BEARING	LENGTH	START NORTHING EASTING	END NORTHING EASTING
L: 62	N36° 43' 35"W	53.51'	1376019.654 3236705.099	1376062.543 3236673.100
L: 63	N36° 43' 35"W	14.36'	1376070.558 3236667.120	1376082.071 3236658.530
L: 64	N53° 16' 25"E	92.62'	1376128.254 3236665.246	1376183.643 3236739.485
L: 65	N36° 43' 35"W	6.00'	1375909.719 3236778.037	1375914.528 3236774.449
L: 66	N36° 43' 35"W	6.00'	1375914.503 3236784.449	1375919.312 3236780.861
L: 67	N36° 43' 35"W	6.00'	1375945.300 3236825.726	1375950.109 3236822.138
L: 68	N36° 43' 35"W	6.00'	1375946.496 3236827.329	1375951.305 3236823.741
L: 69	N36° 43' 35"W	6.00'	1376005.996 3236907.078	1376010.805 3236903.490
L: 70	N36° 43' 35"W	6.00'	1376010.780 3236913.490	1376015.589 3236909.902
L: 71	N36° 43' 35"W	6.00'	1376041.577 3236954.768	1376046.386 3236951.180
L: 72	N36° 43' 35"W	6.00'	1376042.773 3236956.371	1376047.582 3236952.783
L: 73	N36° 43' 35"W	6.00'	1376070.281 3236993.240	1376075.090 3236989.652
L: 74	N36° 43' 35"W	5.00'	1376072.177 3236994.944	1376076.184 3236991.954
L: 75	N36° 43' 35"W	6.00'	1375974.004 3236864.198	1375978.813 3236860.610
L: 76	N36° 43' 35"W	6.00'	1375975.200 3236865.801	1375980.009 3236862.213
L: 77	S36° 43' 35"E	31.61'	1376154.985 3236966.108	1376129.646 3236985.013
L: 78	S36° 43' 35"E	90.13'	1376235.235 3236906.233	1376163.000 3236960.128
L: 79	N36° 43' 35"W	185.10'	1376133.234 3236989.822	1376281.594 3236879.130
L: 80	S53° 16' 25"W	16.00'	1376281.594 3236879.130	1376272.026 3236866.306
L: 81	S53° 16' 25"W	78.50'	1376268.438 3236861.497	1376221.496 3236798.580
L: 82	N53° 16' 25"E	100.50'	1376213.099 3236797.359	1376273.197 3236877.909
L: 83	N77° 43' 16"E	34.06'	1375677.437 3236815.581	1375684.680 3236848.857
L: 84	N53° 18' 59"E	73.23'	1375684.680 3236848.857	1375728.426 3236907.582
L: 85	N53° 18' 59"E	135.84'	1375736.883 3236918.935	1375818.035 3237027.875
L: 86	N50° 41' 19"E	60.92'	1375818.035 3237027.875	1375856.632 3237075.012
L: 87	N55° 20' 25"E	53.93'	1375856.632 3237075.012	1375887.302 3237119.371
L: 88	N89° 35' 18"E	103.04'	1375641.406 3236666.290	1375642.147 3236769.328
L: 89	S0° 24' 42"E	443.34'	1376088.994 3236613.358	1375645.665 3236616.544
L: 90	S53° 16' 23"W	48.10'	1376384.622 3236784.560	1376355.858 3236746.009
L: 91	S0° 24' 42"E	154.47'	1376539.088 3236783.450	1376384.622 3236784.560
L: 92	S89° 35' 18"W	155.40'	1376540.616 3236955.401	1376539.499 3236800.005
L: 93	N36° 43' 37"W	121.53'	1375949.501 3237211.419	1376046.906 3237138.744
L: 94	N53° 16' 23"E	422.45'	1375675.882 3236869.776	1375928.508 3237208.367

CURVE TABLE

CURVE #	LENGTH	DELTA	RADIUS	CRD LENGTH	CRD BEARING	START NORTHING EASTING	END NORTHING EASTING
C: 8	39.27'	180° 00' 00"	12.50'	25.00	N36° 43' 35"W	1376060.136 3237011.414	1376080.173 3236996.464
C: 9	4.71'	90° 00' 00"	3.00'	4.24	S81° 43' 35"E	1376060.148 3237006.414	1376059.538 3237010.613
C: 10	4.71'	90° 00' 00"	3.00'	4.24	N8° 16' 25"E	1375860.405 3236743.714	1375864.603 3236744.324
C: 11	102.35'	130° 18' 44"	45.00'	81.67	S11° 52' 58"E	1375851.435 3236731.691	1375771.514 3236748.508
C: 12	5.43'	103° 47' 05"	3.00'	4.72	N25° 08' 47"W	1375767.240 3236750.514	1375771.514 3236748.508
C: 13	12.48'	11° 10' 32"	64.00'	12.46	S21° 09' 29"W	1375767.240 3236750.514	1375755.617 3236746.015
C: 14	6.69'	127° 42' 11"	3.00'	5.39	N79° 25' 19"E	1375754.628 3236740.721	1375755.617 3236746.015
C: 15	43.98'	90° 00' 00"	28.00'	39.60	S8° 16' 25"W	1375857.926 3236698.585	1375818.740 3236692.887
C: 16	63.62'	90° 00' 00"	40.50'	57.28	N81° 43' 35"W	1376094.373 3237036.400	1376102.615 3236979.720
C: 18	6.28'	120° 00' 00"	3.00'	5.20	N6° 43' 35"W	1375883.791 3236686.429	1375888.951 3236685.820
C: 19	42.60'	97° 38' 09"	25.00'	37.63	S49° 13' 46"E	1375654.490 3236760.961	1375629.916 3236789.460
C: 20	39.25'	89° 57' 37"	25.00'	35.34	N44° 34' 05"E	1375627.929 3236712.168	1375653.108 3236736.970
C: 22	38.34'	87° 52' 20"	25.00'	34.69	N80° 27' 44"W	1376053.660 3237151.325	1376059.409 3237117.112
C: 23	37.65'	86° 17' 03"	25.00'	34.19	N12° 27' 35"E	1376079.345 3237103.747	1376112.730 3237111.124
C: 35	40.29'	92° 19' 42"	25.00'	36.07	S9° 26' 15"W	1376048.233 3237100.789	1376012.655 3237094.875
C: 36	80.05'	106° 39' 31"	43.00'	68.98	N16° 36' 10"E	1375900.281 3237109.687	1375966.384 3237129.397
C: 37	54.66'	16° 39' 31"	188.00'	54.47	S61° 36' 10"W	1375900.281 3237109.687	1375874.376 3237061.773
C: 38	161.36'	215° 00' 00"	43.00'	82.02	S19° 13' 35"E	1375781.418 3236806.371	1375703.973 3236833.380
C: 40	122.48'	155° 56' 56"	45.00'	88.02	S10° 17' 57"W	1375783.417 3236806.311	1375696.811 3236790.573
C: 41	9.17'	30° 54' 14"	17.00'	9.06	N72° 49' 17"E	1375784.562 3236844.279	1375787.237 3236852.933
C: 42	4.93'	94° 05' 46"	3.00'	4.39	N10° 19' 17"E	1375787.237 3236852.933	1375791.558 3236853.720
C: 43	4.71'	90° 00' 00"	3.00'	4.24	N81° 43' 35"W	1375803.207 3236822.571	1375803.818 3236818.372
C: 44	45.95'	57° 14' 21"	46.00'	44.07	S24° 39' 14"W	1375775.307 3236780.159	1375735.257 3236761.777
C: 45	19.35'	3° 33' 14"	312.00'	19.35	N2° 11' 19"W	1375715.783 3236760.520	1375735.118 3236759.782
C: 46	45.90'	87° 40' 18"	30.00'	41.56	S80° 33' 45"E	1376075.862 3237047.715	1376069.048 3237088.709
C: 47	39.93'	36° 18' 53"	63.00'	39.27	N18° 34' 09"W	1375696.129 3236736.661	1375733.350 3236724.157
C: 52	15.53'	89° 00' 02"	10.00'	14.02	S72° 05' 34"E	1376165.818 3237053.349	1376161.507 3237066.688
C: 54	4.42'	10° 08' 01"	25.00'	4.42	N58° 20' 25"E	1376159.727 3237042.054	1376162.045 3237045.813
C: 57	67.12'	72° 33' 38"	53.00'	62.72	S0° 26' 47"E	1376132.833 3236642.012	1376070.111 3236642.500
C: 58	37.99'	72° 33' 38"	30.00'	35.50	S0° 26' 47"E	1376168.336 3236641.735	1376132.833 3236642.012
C: 61	47.12'	90° 00' 00"	30.00'	42.43	N81° 43' 35"W	1376177.249 3236697.469	1376183.354 3236655.484
C: 62	30.72'	106° 39' 31"	16.50'	26.47	N16° 36' 10"E	1375925.172 3237100.594	1375950.537 3237108.157
C: 63	19.59'	5° 14' 44"	214.00'	19.59	N67° 18' 34"E	1375917.147 3237082.696	1375924.702 3237100.766
C: 64	8.31'	158° 43' 37"	3.00'	5.90	S35° 57' 00"E	1375921.921 3237079.234	1375917.147 3237082.696
C: 65	113.25'	144° 11' 44"	45.00'	85.64	S28° 41' 03"E	1375997.053 3237038.128	1375921.921 3237079.234
C: 66	3.35'	64° 03' 20"	3.00'	3.18	S68° 45' 15"E	1375998.206 3237035.162	1375997.053 3237038.128
C: 67	4.71'	90° 00' 00"	3.00'	4.24	S8° 16' 25"W	1376039.488 3237030.563	1376035.289 3237029.952
C: 68	11.00'	90° 00' 00"	7.00'	9.90	N81° 43' 35"W	1376039.558 3237042.363	1376040.983 3237032.566
C: 76	51.84'	90° 00' 00"	33.00'	46.67	N8° 16' 25"E	1376082.071 3236658.530	1376128.254 3236665.246

Know what's **below.**
Call before you dig.

File Location:Q:\DEN\Projects\0399-00 Mountain View Academy\Design\CDs\Civil\Phase II\on-site\HCP.dwg Plot Date:2/7/2020 5:21 PM Last Saved By: IRYPKEMA

MERRICK®
Engineering | Architecture | Design-Build | Surveying | Planning | Geospatial Solutions
5970 GREENWOOD PLAZA BLVD. GREENWOOD VILLAGE, CO. 80111
303-751-0741
www.merrick.com

NATIONAL HERITAGE ACADEMIES®

REV	REVISION DESCRIPTION	DATE	CHND	CHKD	APPR

TITLE:
MOUNTAIN VIEW ACADEMY
CIVIL CONSTRUCTION DOCUMENTS
HORIZONTAL CONTROL PLAN TABLES

ISSUED FOR REVIEW

FOR AND ON BEHALF OF MERRICK & COMPANY

PE STAMP

JOB NUMBER 65120399
DATE 02/07/2020
SHEET C2.2
6 of X

THIS AND ANY OTHER ELECTRONIC MEDIA COUNTERPART IS AN INSTRUMENT OF SERVICE PREPARED BY MERRICK AND COMPANY FOR A DEFINED PROJECT. IT IS NOT INTENDED OR REPRESENTED TO BE SUITABLE FOR REUSE IN WHOLE OR IN PART ON EXTENSIONS OF THE PROJECT OR ON ANY OTHER PROJECT. ANY REUSE WITHOUT WRITTEN VERIFICATION OR ADAPTATION BY MERRICK AND COMPANY FOR THE SPECIFIC PURPOSE INTENDED WILL BE AT THE USER'S SOLE RISK AND WITHOUT LIABILITY OR LOSS EXPOSURE TO MERRICK AND COMPANY.

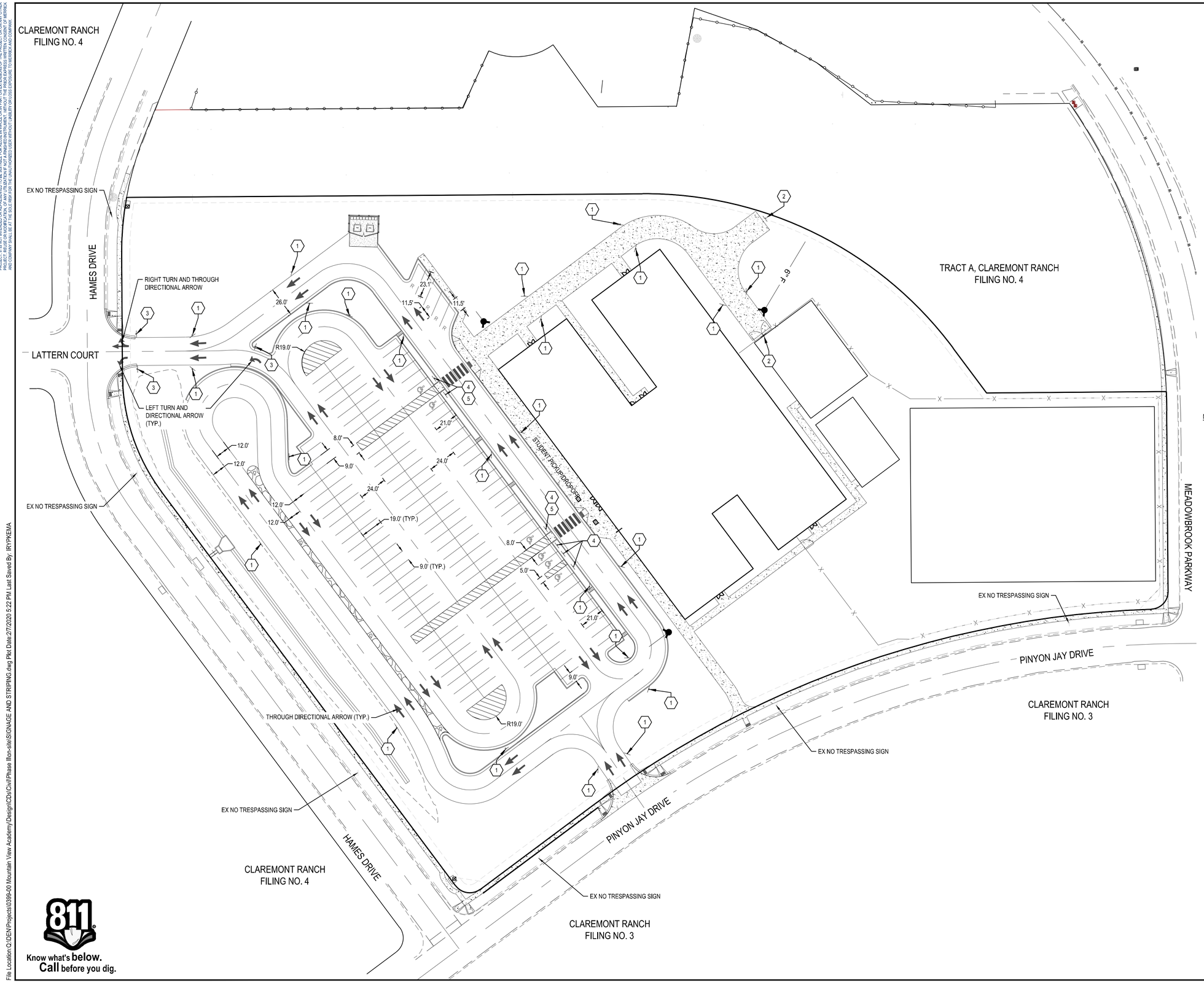

LEGEND

1	R7-1 (SP) (12"X18")	NO PARKING FIRE LANE
2	R7-1 (SP) (12"X18")	NO PARKING FIRE LANE
3	R1-1 (30"X30")	STOP
4	R7-8 (12"X18")	RESERVED PARKING
5	R7-8 P (12"X9")	VAN ACCESSIBLE

NOTES:

1. ALL PAVEMENT MARKINGS SHALL BE SOLID 4" WIDE TRAFFIC WHITE PAINT
2. ACCESSIBLE LOADING ZONES TO BE STRIPED WITH 4" WIDE WHITE DIAGONAL STRIPE AT 48" ON CENTER
3. DIRECTIONAL ARROWS SHALL BE REFLECTIVE WHITE PAIN ON ASPHALT AND REFLECTIVE YELLOW PAINT ON CONCRETE.
4. SIGNS SHOWN ON PLAN ARE SYMBOLIC. ALL SIGN MATERIALS, DIMENSIONS, INSTALLATION, PLACEMENT, AND OFFSET FROM CURB SHALL CONFORM TO STANDARDS FROM MUTCD 2009 EDITION WITH CURRENT REVISIONS.

40' 0 20' 40' 80'
1" = 40' HOR.

Know what's **below.**
Call before you dig.

File Location:Q:\DEN\Projects\03399-00 Mountain View Academy\Design\CDs\Civil\Phase II\on-site\SIGNAGE AND STRIPING.dwg Plot Date:2/7/2020 5:22 PM Last Saved By: IRYPKEMA

MERRICK®
Engineering | Architecture | Design-Build | Surveying | Planning | Geospatial Solutions
5970 GREENWOOD PLAZA BLVD, GREENWOOD VILLAGE, CO, 80111
303-751-0741
www.merrick.com

NATIONAL HERITAGE ACADEMIES®

REV	REVISION DESCRIPTION	DATE	CHND	CHKD	APPR

TITLE
MOUNTAIN VIEW ACADEMY
CIVIL CONSTRUCTION DOCUMENTS
SIGNAGE AND STRIPING

PE STAMP
ISSUED FOR REVIEW
FOR AND ON BEHALF OF MERRICK & COMPANY

JOB NUMBER: 65120399
DATE: 02/07/2020
SHEET: C2.3
7 of 20

THIS AND ANY OTHER ELECTRONIC MEDIA COUNTERPART IS AN INSTRUMENT OF SERVICE PREPARED BY MERRICK AND COMPANY FOR A DEFINED PROJECT. IT IS NOT INTENDED OR REPRESENTED TO BE SUITABLE FOR REUSE IN WHOLE OR IN PART ON EXTENSIONS OF THE PROJECT OR ON ANY OTHER PROJECT. ANY REUSE WITHOUT WRITTEN VERIFICATION OR ADAPTATION BY MERRICK AND COMPANY FOR THE SPECIFIC PURPOSE INTENDED WILL BE AT THE USER'S SOLE RISK AND WITHOUT LIABILITY OR LIABILITY OR LOSS EXPOSURE TO MERRICK AND COMPANY.

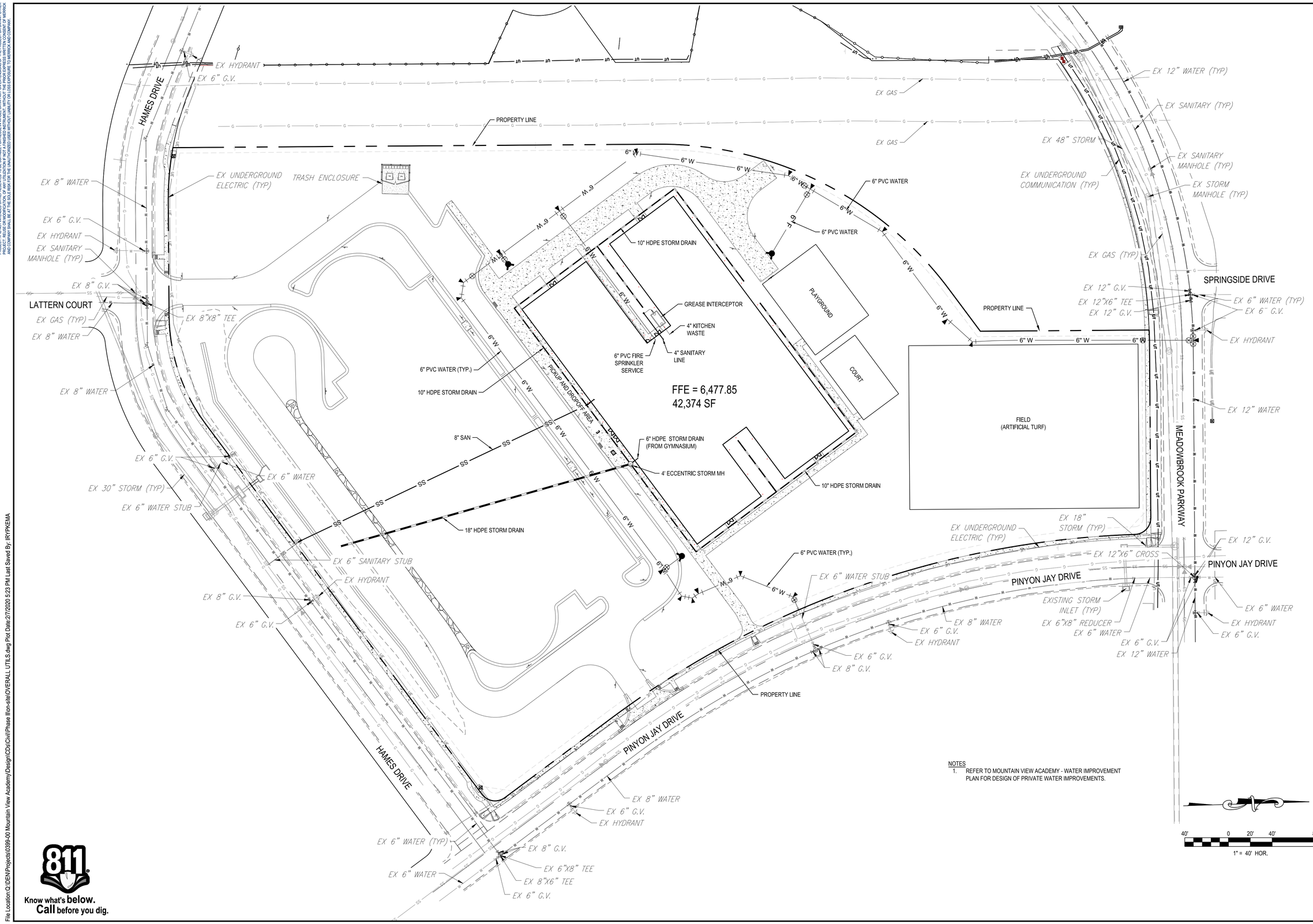

NOTES
1. REFER TO MOUNTAIN VIEW ACADEMY - WATER IMPROVEMENT PLAN FOR DESIGN OF PRIVATE WATER IMPROVEMENTS.

Know what's below. Call before you dig.

File Location Q:\DEN\Projects\0399-00 Mountain View Academy\Design\CDs\Civil\Phase II\on-site\OVERALL UTILS.dwg Plot Date:2/7/2020 5:23 PM Last Saved By: IRYPKEMA

MERRICK®
Engineering | Architecture | Design-Build | Surveying | Planning | Geospatial Solutions
5970 GREENWOOD PLAZA BLVD. GREENWOOD VILLAGE, CO. 80111
303-751-0741
www.merrick.com

NATIONAL HERITAGE ACADEMIES

REV	REVISION DESCRIPTION	DATE	CHND	CHKD	APPR

TITLE:
MOUNTAIN VIEW ACADEMY
CIVIL CONSTRUCTION DOCUMENTS
OVERALL UTILITY EXHIBIT

ISSUED FOR REVIEW

FOR AND ON BEHALF OF MERRICK & COMPANY

PE STAMP

JOB NUMBER 65120399
DATE 02/07/2020
SHEET C2.4
8 of 20

THIS AND ANY OTHER ELECTRONIC MEDIA COUNTERPART IS AN INSTRUMENT OF SERVICE PREPARED BY MERRICK AND COMPANY FOR A DEFINED PROJECT. IT IS NOT INTENDED OR REPRESENTED TO BE SUITABLE FOR REUSE IN WHOLE OR IN PART ON EXTENSIONS OF THE PROJECT OR ON ANY OTHER PROJECT. ANY REUSE WITHOUT WRITTEN VERIFICATION OR ADAPTATION BY MERRICK AND COMPANY FOR THE SPECIFIC PURPOSE INTENDED WILL BE AT THE USER'S SOLE RISK AND WITHOUT LIABILITY OR LEGAL EXPOSURE TO MERRICK AND COMPANY.

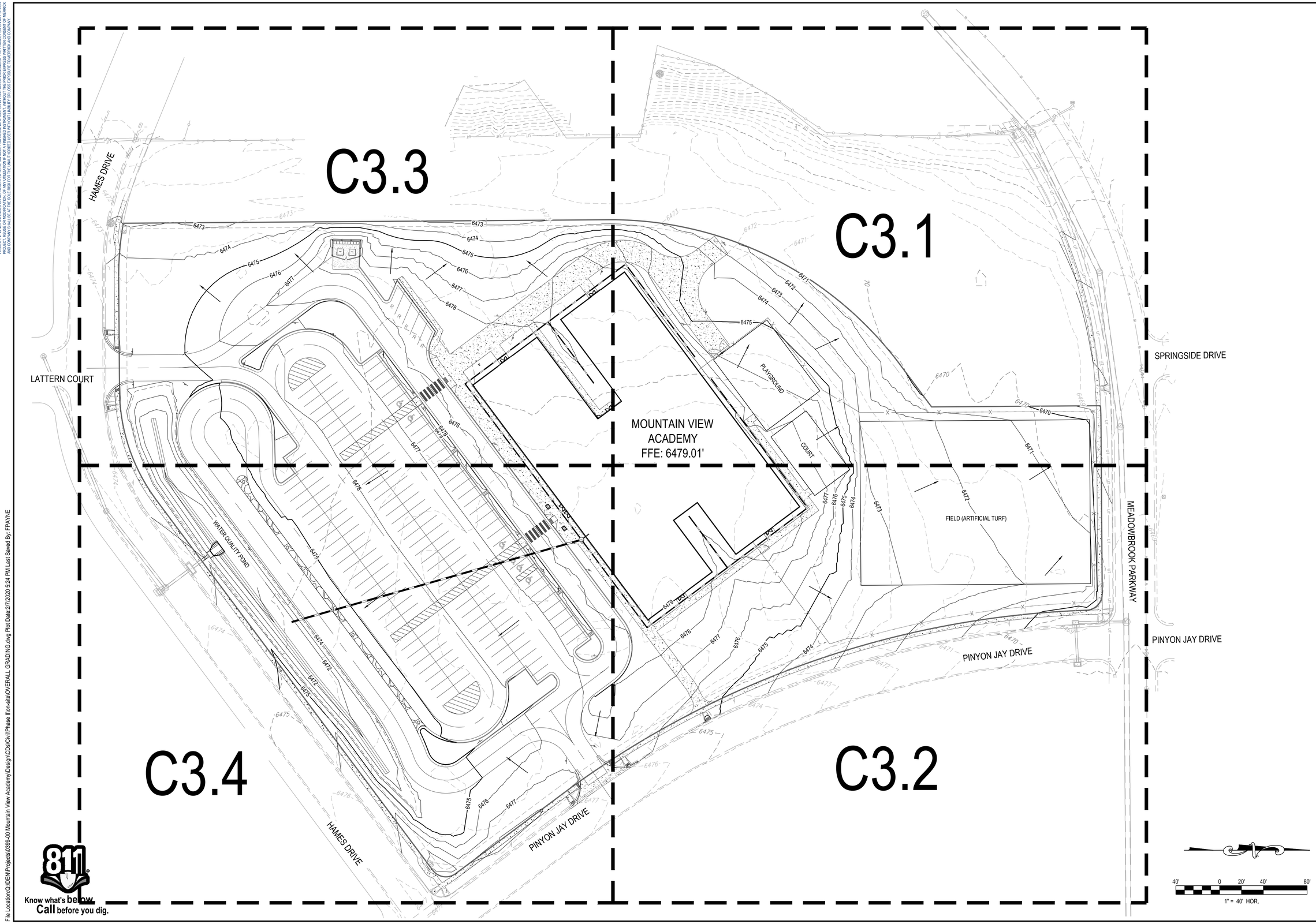

Know what's below. Call before you dig.

File Location: Q:\DEN\Projects\0399-00 Mountain View Academy\Design\CDs\Civil\Phase II\on-site\OVERALL GRADING.dwg Plot Date:2/7/2020 5:24 PM Last Saved By: FPAYNE

MERRICK®
Engineering | Architecture | Design-Build | Surveying | Planning | Geospatial Solutions
5970 GREENWOOD PLAZA BLVD. GREENWOOD VILLAGE, CO. 80111
303-751-0741
www.merrick.com

NATIONAL HERITAGE ACADEMIES

REV	REVISION DESCRIPTION	DATE	CHND	CHKD	APPR

TITLE:
MOUNTAIN VIEW ACADEMY
CIVIL CONSTRUCTION DOCUMENTS
OVERALL GRADING PLAN

PE STAMP
ISSUED FOR REVIEW
FOR AND ON BEHALF OF MERRICK & COMPANY

JOB NUMBER 65120399
DATE 02/07/2020
SHEET C3.0
9 of 20

THIS AND ANY OTHER ELECTRONIC MEDIA COUNTERPART IS AN INSTRUMENT OF SERVICE PREPARED BY MERRICK AND COMPANY FOR A DEFINED PROJECT. IT IS NOT INTENDED OR REPRESENTED TO BE SUITABLE FOR REUSE IN WHOLE OR IN PART ON EXTENSIONS OF THE PROJECT OR ON ANY OTHER PROJECT. ANY REUSE WITHOUT WRITTEN VERIFICATION OR ADAPTATION BY MERRICK AND COMPANY FOR THE SPECIFIC PURPOSE INTENDED WILL BE AT THE USER'S SOLE RISK AND WITHOUT LIABILITY OR LEGAL EXPOSURE TO MERRICK AND COMPANY.

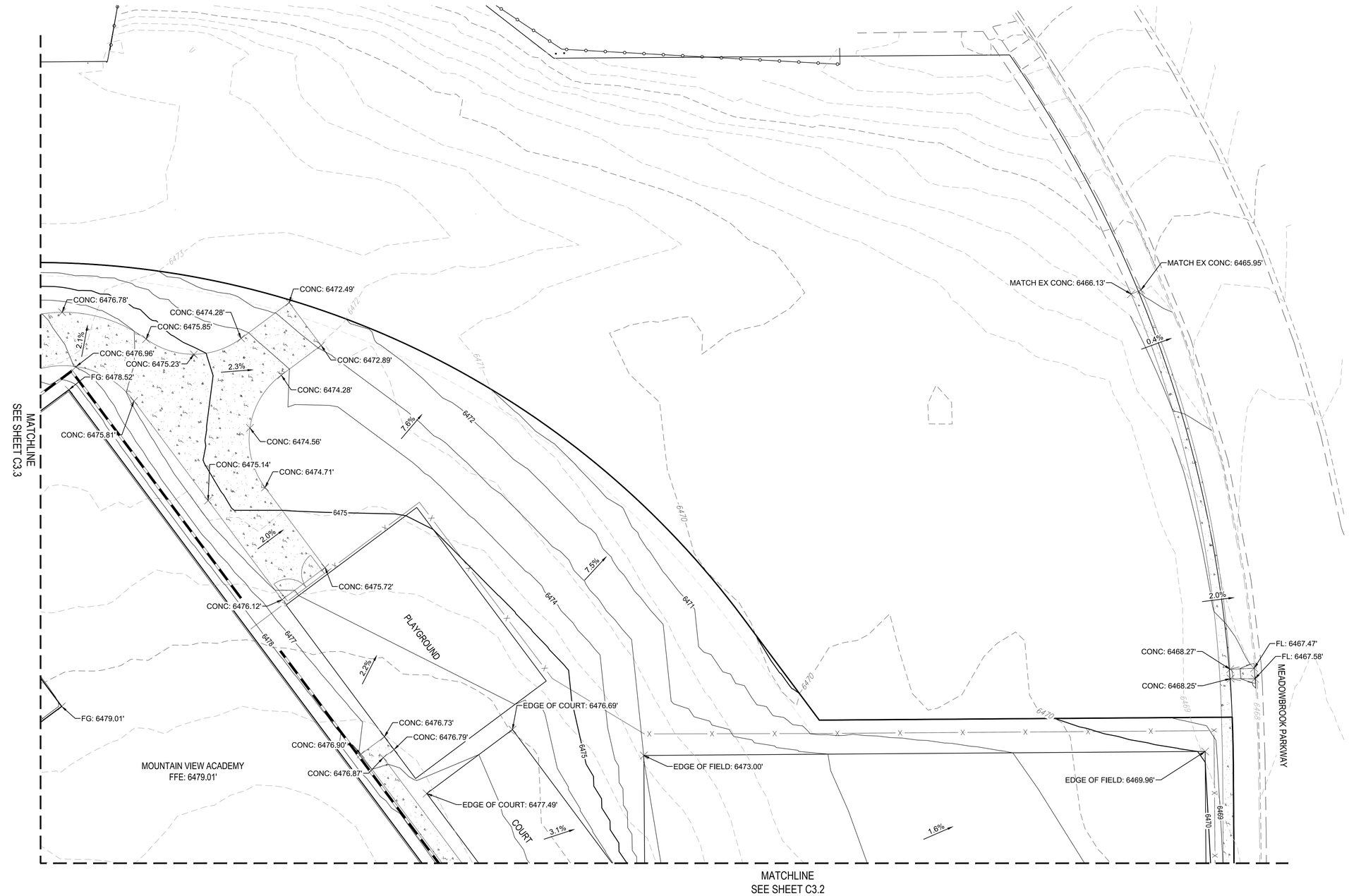

Know what's **below.**
Call before you dig.

20' 0 10' 20' 40'
1" = 20' HOR.

MERRICK®
Engineering | Architecture | Design-Build | Surveying | Planning | Geospatial Solutions
5970 GREENWOOD PLAZA BLVD, GREENWOOD VILLAGE, CO, 80111
303-751-0741
www.merrick.com

NATIONAL HERITAGE ACADEMIES

REV	REVISION DESCRIPTION	DATE	CHND	CHKD	APPR

TITLE:
MOUNTAIN VIEW ACADEMY
CIVIL CONSTRUCTION DOCUMENTS
DETAIL GRADING PLAN

PE STAMP
ISSUED FOR REVIEW
FOR AND ON BEHALF OF MERRICK & COMPANY

JOB NUMBER 65120399
DATE 02/07/2020
SHEET C3.1
10 of 20

File Location Q:\DEN\Projects\0399-00 Mountain View Academy\Design\CDs\Civil\Phase II\on-site\DETAIL GRADING.dwg Plot Date 2/7/2020 5:24 PM Last Saved By: FPAYNE

THIS AND ANY OTHER ELECTRONIC MEDIA COUNTERPART IS AN INSTRUMENT OF SERVICE PREPARED BY MERRICK AND COMPANY FOR A DEFINED PROJECT. IT IS NOT INTENDED OR REPRESENTED TO BE SUITABLE FOR REUSE IN WHOLE OR IN PART ON EXTENSIONS OF THE PROJECT OR ON ANY OTHER PROJECT. ANY REUSE WITHOUT WRITTEN VERIFICATION OR ADAPTATION BY MERRICK AND COMPANY FOR THE SPECIFIC PURPOSE INTENDED WILL BE AT THE USER'S SOLE RISK AND WITHOUT LIABILITY OR LEGAL EXPOSURE TO MERRICK AND COMPANY.

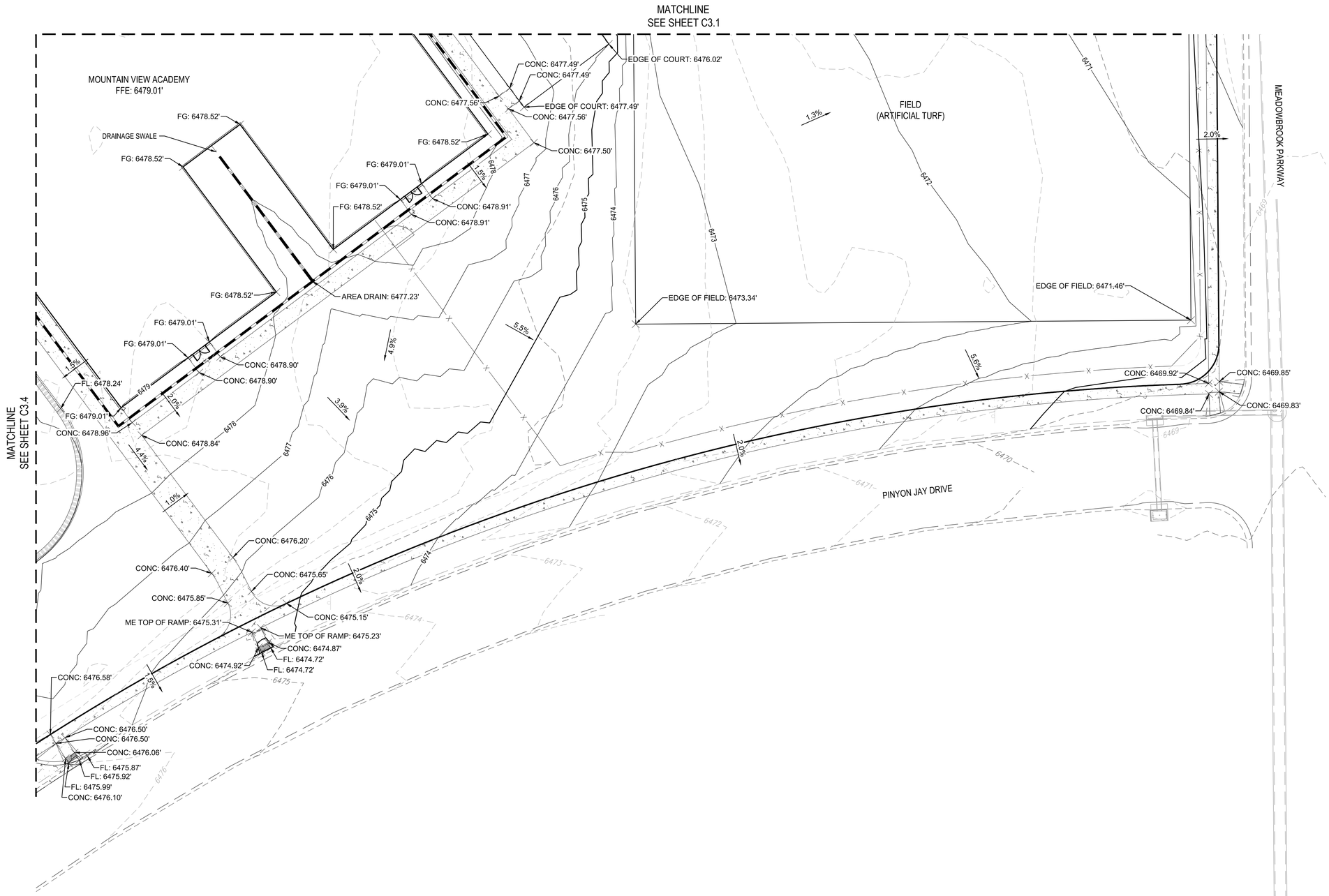

LEGEND

DENOTES THE USE OF SPILL CURB

20' 0 10' 20' 40'

1" = 20' HOR.

Know what's **below.**
Call before you dig.

File Location Q:\DEN\Projects\0399-00 Mountain View Academy\Design\CDs\Civil\Phase II\on-site\DETAIL GRADING.dwg Plot Date:2/7/2020 5:24 PM Last Saved By: FPAYNE

MERRICK®
Engineering | Architecture | Design-Build | Surveying | Planning | Geospatial Solutions
5970 GREENWOOD PLAZA BLVD, GREENWOOD VILLAGE, CO, 80111
303-751-0741
www.merrick.com

NATIONAL HERITAGE ACADEMIES®

REV	REVISION DESCRIPTION	DATE	CHND	CHKD	APPR

TITLE:
MOUNTAIN VIEW ACADEMY
CIVIL CONSTRUCTION DOCUMENTS
DETAIL GRADING PLAN

PE STAMP

ISSUED FOR REVIEW

FOR AND ON BEHALF OF MERRICK & COMPANY

JOB NUMBER 65120399

DATE 02/07/2020

SHEET C3.2

11 of 20

THIS AND ANY OTHER ELECTRONIC MEDIA COUNTERPART IS AN INSTRUMENT OF SERVICE PREPARED BY MERRICK AND COMPANY FOR A DEFINED PROJECT. IT IS NOT INTENDED OR REPRESENTED TO BE SUITABLE FOR REUSE IN WHOLE OR IN PART ON EXTENSIONS OF THE PROJECT OR ON ANY OTHER PROJECT. ANY REUSE WITHOUT WRITTEN VERIFICATION OR ADAPTATION BY MERRICK AND COMPANY FOR THE SPECIFIC PURPOSE INTENDED WILL BE AT THE USER'S SOLE RISK AND WITHOUT LIABILITY OR LIABILITY OR LOSS EXPOSURE TO MERRICK AND COMPANY.

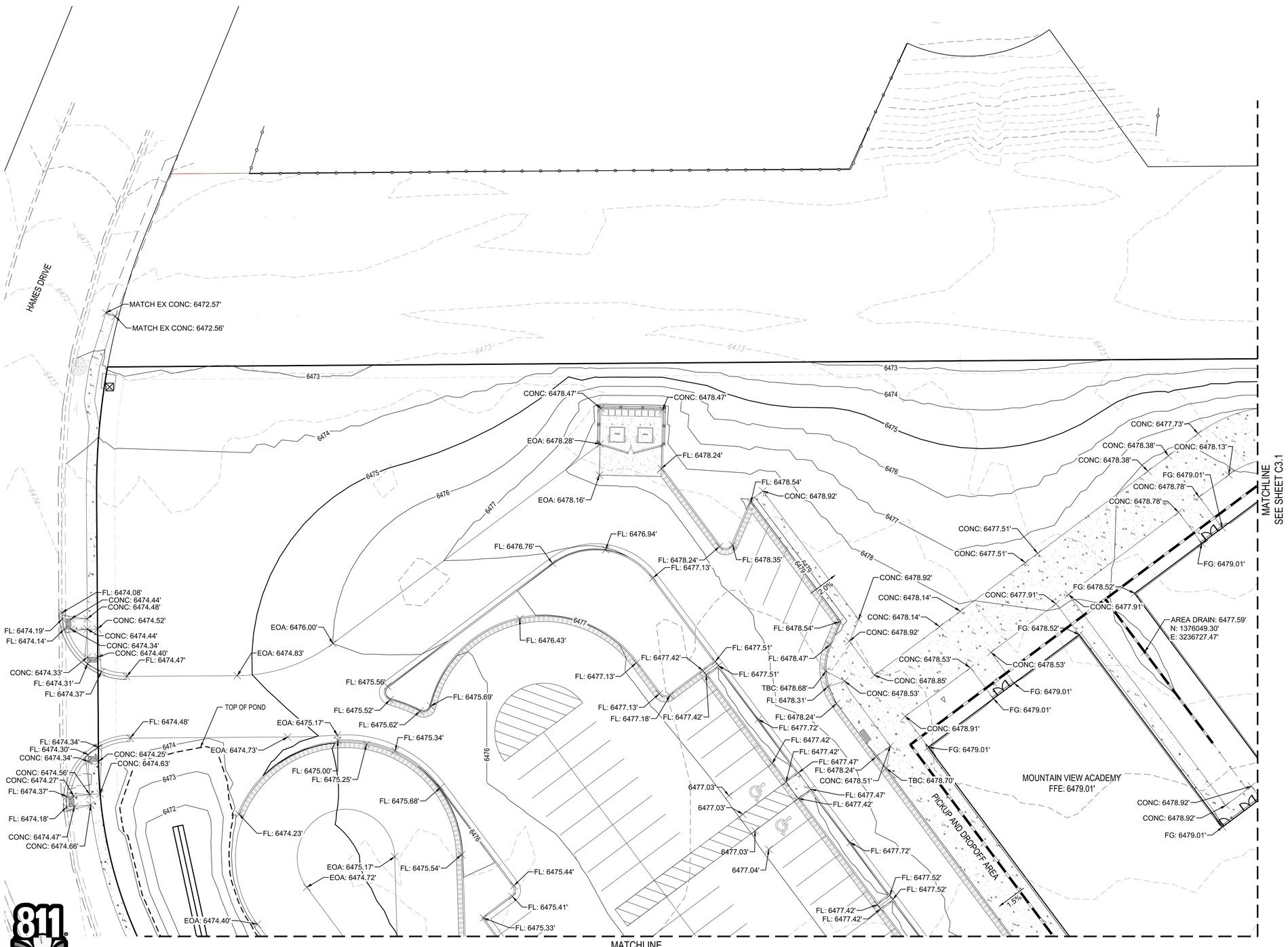

LEGEND

DENOTES THE USE OF SPILL CURB

Know what's **below.**
Call before you dig.

File Location Q:\DEN\Projects\0399-00 Mountain View Academy\Design\CDs\Civil\Phase II\on-site\DETAIL GRADING.dwg Plot Date:2/7/2020 5:24 PM Last Saved By: FPAYNE

MERRICK®
Engineering | Architecture | Design-Build | Surveying | Planning | Geospatial Solutions
5970 GREENWOOD PLAZA BLVD, GREENWOOD VILLAGE, CO, 80111
303-751-0741
www.merrick.com

NATIONAL HERITAGE ACADEMIES

REV	REVISION DESCRIPTION	DATE	CHND	CHKD	APPR

TITLE:
MOUNTAIN VIEW ACADEMY
CIVIL CONSTRUCTION DOCUMENTS
DETAIL GRADING PLAN

PE STAMP

ISSUED FOR REVIEW

FOR AND ON BEHALF OF MERRICK & COMPANY

JOB NUMBER 65120399
DATE 02/07/2020
SHEET C3.3
12 of 20

THIS AND ANY OTHER ELECTRONIC MEDIA COUNTERPART IS AN INSTRUMENT OF SERVICE PREPARED BY MERRICK AND COMPANY FOR A DEFINED PROJECT. IT IS NOT INTENDED OR REPRESENTED TO BE SUITABLE FOR REUSE IN WHOLE OR IN PART ON EXTENSIONS OF THE PROJECT OR ON ANY OTHER PROJECT. ANY REUSE WITHOUT WRITTEN VERIFICATION OR ADAPTATION BY MERRICK AND COMPANY FOR THE SPECIFIC PURPOSE INTENDED WILL BE AT THE USER'S SOLE RISK AND WITHOUT LIABILITY OR LIABILITY OR LOSS EXPOSURE TO MERRICK AND COMPANY.

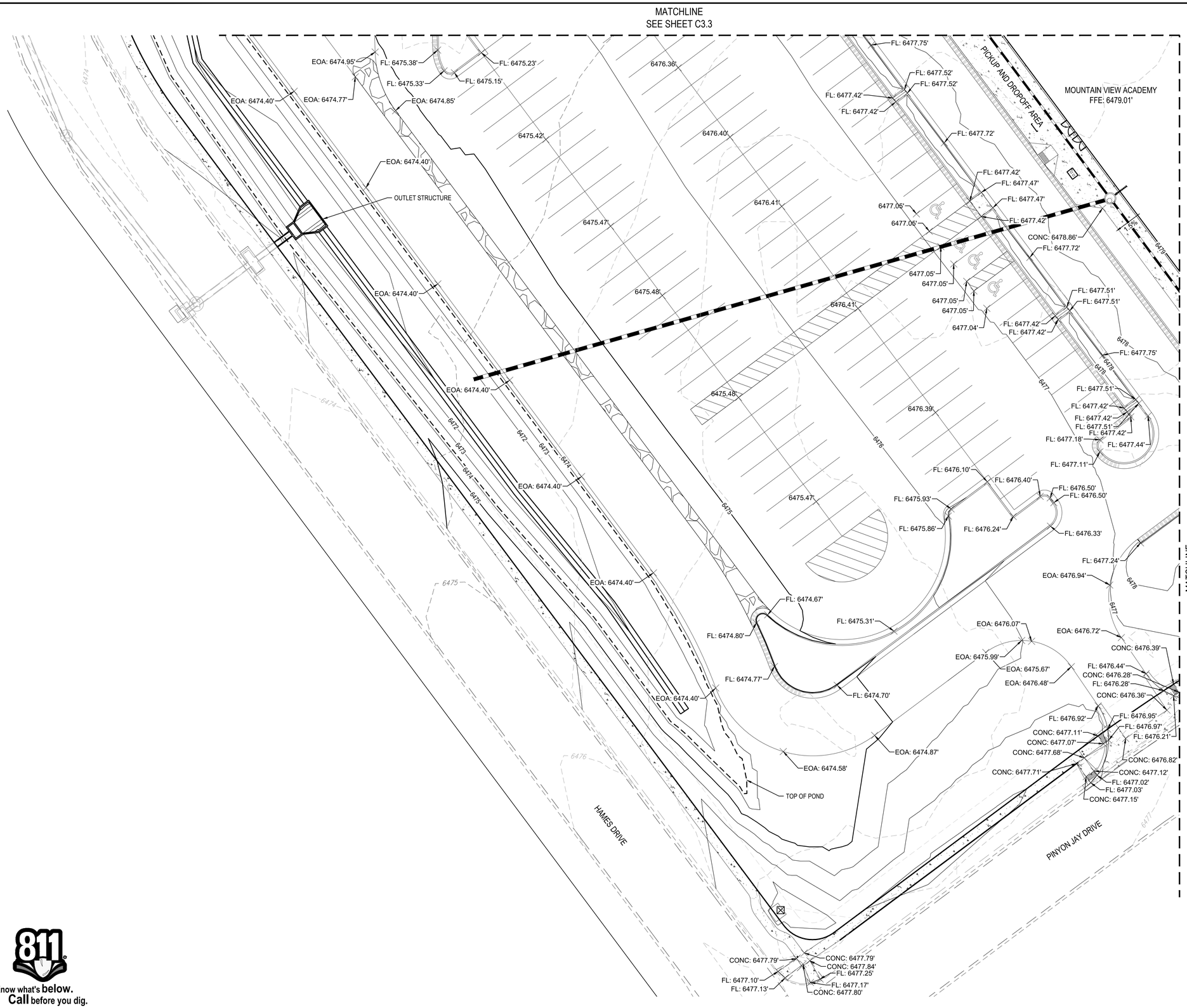

LEGEND

DENOTES THE USE OF SPILL CURB

20' 0 10' 20' 40'

1" = 20' HOR.

Know what's **below.**
Call before you dig.

File Location: Q:\DEN\Projects\0399-00 Mountain View Academy\Design\CDs\Civil\Phase II\on-site\DETAIL GRADING.dwg Plot Date: 2/7/2020 5:24 PM Last Saved By: FPAYNE

MERRICK®
Engineering | Architecture | Design-Build | Surveying | Planning | Geospatial Solutions
5970 GREENWOOD PLAZA BLVD, GREENWOOD VILLAGE, CO, 80111
303-751-0741
www.merrick.com

NATIONAL HERITAGE ACADEMIES®

REV	REVISION DESCRIPTION	DATE	CHKD	APPR

TITLE:
MOUNTAIN VIEW ACADEMY
CIVIL CONSTRUCTION DOCUMENTS
DETAIL GRADING PLAN

PE STAMP

ISSUED FOR REVIEW

FOR AND ON BEHALF OF MERRICK & COMPANY

JOB NUMBER 65120399

DATE 02/07/2020

SHEET C3.4

13 of 20

THIS AND ANY OTHER ELECTRONIC MEDIA COUNTERPART IS AN INSTRUMENT OF SERVICE PREPARED BY MERRICK AND COMPANY FOR A DEFINED PROJECT. IT IS NOT INTENDED OR REPRESENTED TO BE SUITABLE FOR REUSE IN WHOLE OR IN PART ON EXTENSIONS OF THE PROJECT OR ON ANY OTHER PROJECT. ANY REUSE WITHOUT WRITTEN VERIFICATION OR ADAPTATION BY MERRICK AND COMPANY FOR THE SPECIFIC PURPOSE INTENDED WILL BE AT THE USER'S SOLE RISK AND WITHOUT LIABILITY OR LOSS EXPOSURE TO MERRICK AND COMPANY.

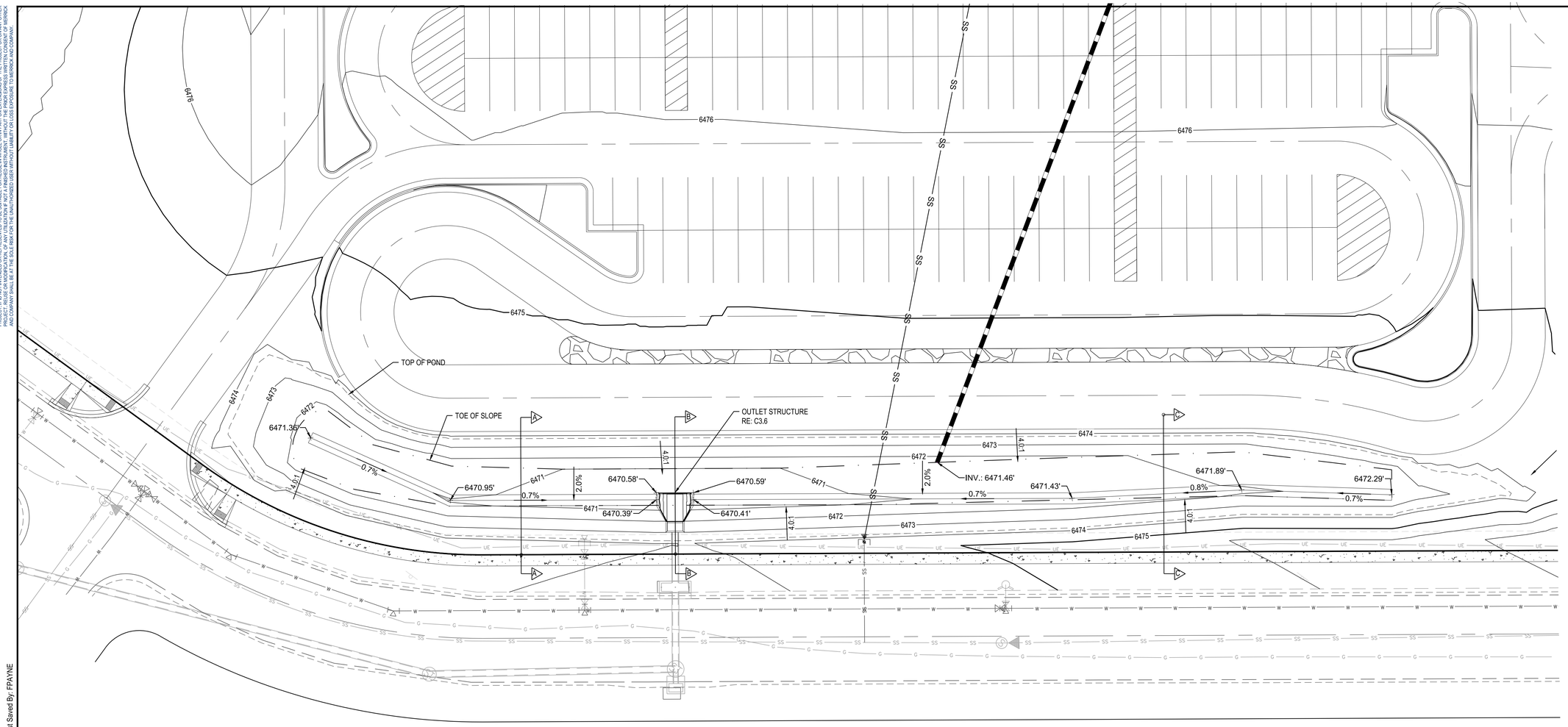

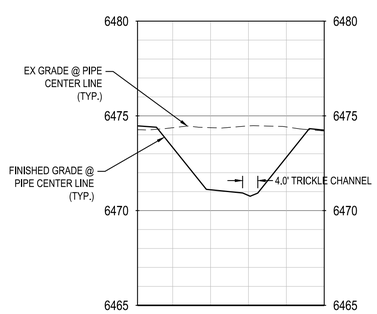

SECTION A-A

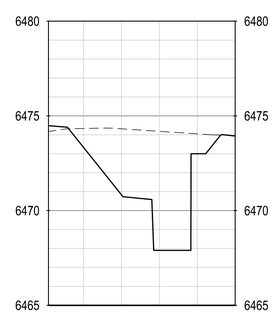

SECTION B-B

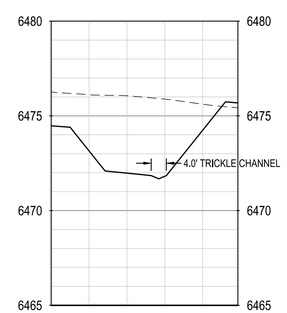

SECTION C-C

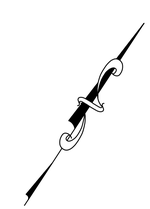

10' 0 5' 10' 20'

1" = 10' HOR.

Know what's **below.**
Call before you dig.

File Location:Q:\DEN\Projects\0399-00 Mountain View Academy\Design\CDs\Civil\Phase II\on-site\POND GRADING.dwg Plot Date:2/7/2020 5:24 PM Last Saved By: FPAYNE

MERRICK®
Engineering | Architecture | Design-Build | Surveying | Planning | Geospatial Solutions
5970 GREENWOOD PLAZA BLVD, GREENWOOD VILLAGE, CO, 80111
303-751-0741
www.merrick.com

NATIONAL HERITAGE ACADEMIES®

REV	REVISION DESCRIPTION	DATE	CHND	CHKD	APPR

TITLE:
MOUNTAIN VIEW ACADEMY
CIVIL CONSTRUCTION DOCUMENTS
POND GRADING PLAN

P.E. STAMP

ISSUED FOR REVIEW

FOR AND ON BEHALF OF MERRICK & COMPANY

JOB NUMBER 65120399

DATE 02/07/2020

SHEET C3.5

14 of 20

THIS AND ANY OTHER ELECTRONIC MEDIA COUNTERPART IS AN INSTRUMENT OF SERVICE PREPARED BY MERRICK AND COMPANY FOR A DEFINED PROJECT. IT IS NOT INTENDED OR REPRESENTED TO BE SUITABLE FOR REUSE IN WHOLE OR IN PART ON EXTENSIONS OF THE PROJECT OR ON ANY OTHER PROJECT. ANY REUSE WITHOUT WRITTEN VERIFICATION OR ADAPTATION BY MERRICK AND COMPANY FOR THE SPECIFIC PURPOSE INTENDED WILL BE AT THE USER'S SOLE RISK AND WITHOUT LIABILITY OR LEGAL EXPOSURE TO MERRICK AND COMPANY.

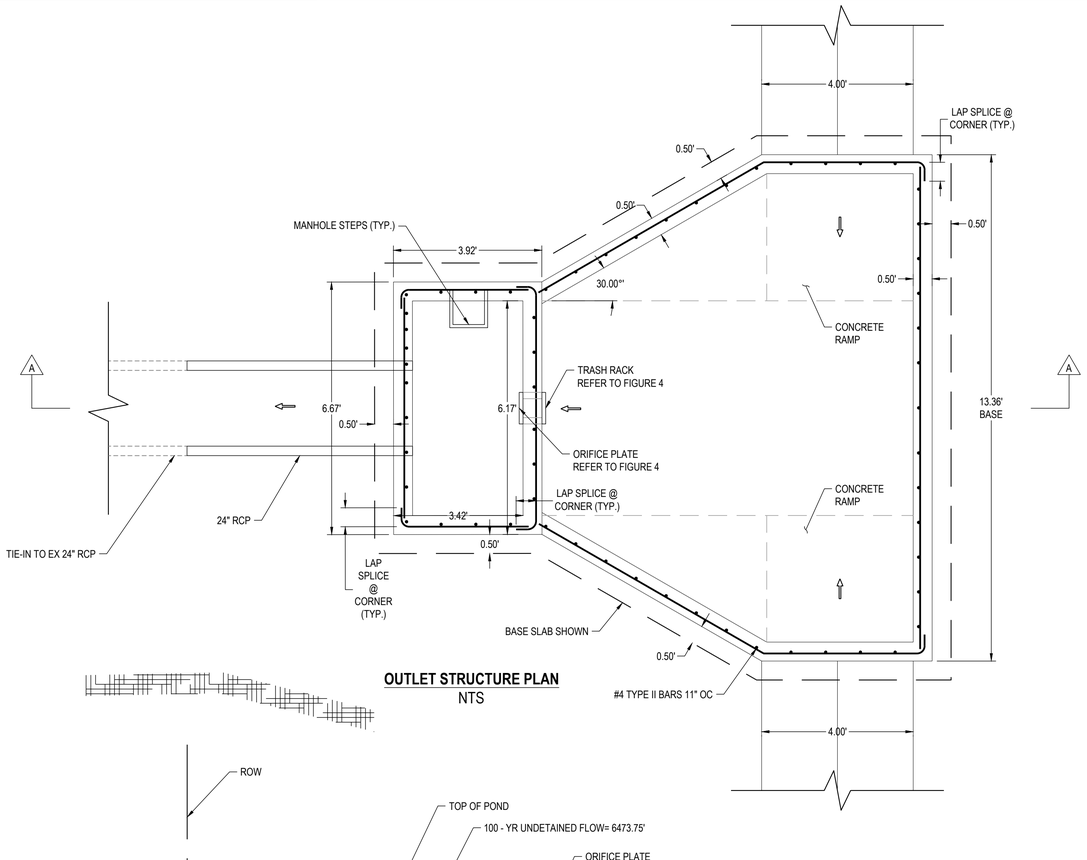

OUTLET STRUCTURE PLAN
NTS

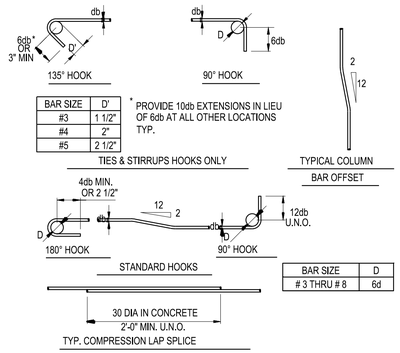

BAR SIZE	D'
#3	1 1/2"
#4	2"
#5	2 1/2"

TIES & STIRRUPS HOOKS ONLY

* PROVIDE 10db EXTENSIONS IN LIEU OF 6db AT ALL OTHER LOCATIONS TYP.

BAR SIZE	D
# 3 THRU # 8	6d

BAR DESCRIPTION AND LOCATION IN STRUCTURE	CONCRETE STRENGTH psi	BAR SIZE / LAP CLASS	#4 A	#4 B	#5 A	#5 B	#6 A	#6 B
BAR WITH SPACING > 2*db CLEAR COVER > db OR BEAM & COLUMN BARS WITH SPACING > db CLEAR COVER > DB	4500	TOP	2'-0"	2'-7"	2'-6"	3'-2"	2'-11"	3'-10"
		BOTTOM	1'-6"	2'-0"	1'-11"	2'-6"	2'-3"	2'-11"
OTHER CASES	4500	TOP	2'-11"	3'-10"	3'-8"	4'-9"	4'-5"	4'-9"
		BOTTOM	2'-3"	2'-11"	2'-10"	3'-8"	3'-5"	4'-5"

NOTES:
1. USE THIS TABLE FOR BAR SPLICES UNLESS SPECIFICALLY DETAILED AND DIMENSIONED ON PLANS.
2. FOR TENSION DEVELOPMENT LENGTHS "Ld", USE CLASS "B" SPLICE LENGTHS.
3. ALL SPLICES SHALL BE CLASS "B" UNLESS NOTED OTHERWISE ON PLANS.
4. TOP BARS ARE HORIZONTAL REINFORCEMENT WITH MORE THAN 12" OF CONCRETE CAST BELOW BAR.
5. BOTTOM BARS ARE ALL VERTICAL BARS, ALL HORIZONTAL WALL REINFORCEMENT, AND HORIZONTAL REINFORCEMENT WITH LESS THAN 12" OF CONCRETE CAST BELOW BAR.
6. COVER DESIGNATES CLEAR CONCRETE COVER FROM SPLICED BAR TO FACE OF MEMBER, SPACING DESIGNATES CLEAR DIMENSION BETWEEN SPLICED BARS.
7. STAGGER CONTINUOUS FOOTING BOTTOM SPLICES AT LEAST 6'-0" FROM SPLICES IN OTHER BOTTOM REINFORCEMENT; STAGGER SPICES FOR TOP REINFORCEMENT SIMILARLY.

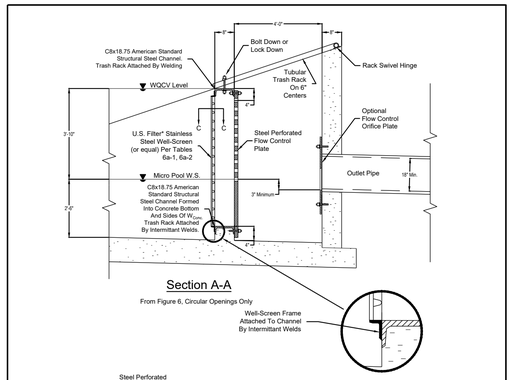

Section A-A
From Figure 6, Circular Openings Only

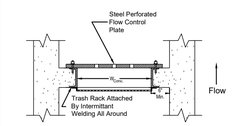

Section B-B - Plan View
From Figure 6, Circular Openings Only

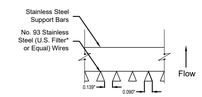

Section C-C
From Figure 6, Circular Openings Only

R Value = (net open area)/(gross rack area) = 0.60

Limits for this Standardized Design:
1. All outlet plate openings are circular.
2. Maximum diameter of opening = 2 inches.

*U.S. Filter, St. Paul, Minnesota, USA

Urban Drainage and Flood Control District
Drainage Criteria Manual (V.3)
File: Details.dwg

Figure 6-a
Suggested Standardardized Trash Rack and Outlet Design For WQCV Outlets With Circular Openings

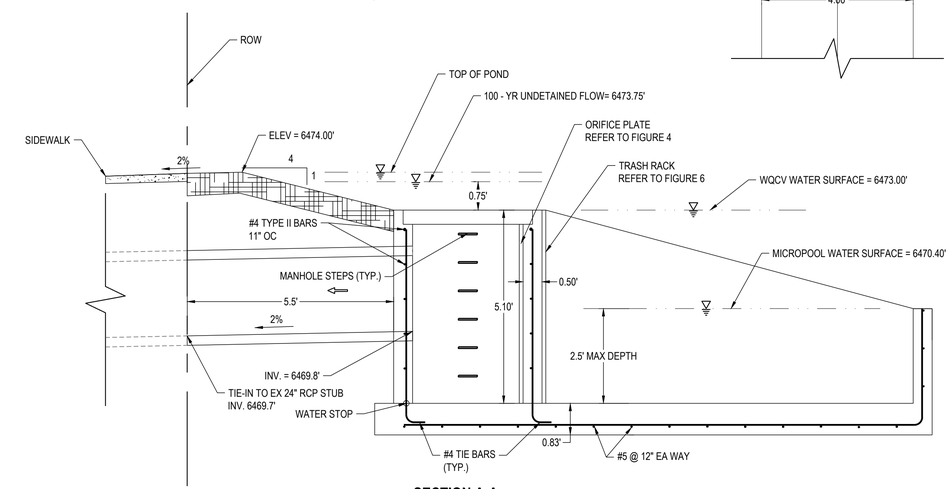

SECTION A-A
NTS

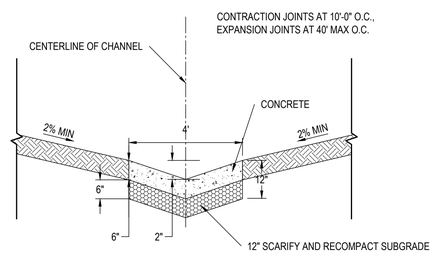

CONCRETE TRICKLE CHANNEL DETAIL
N.T.S.

Orifice Perforation Details

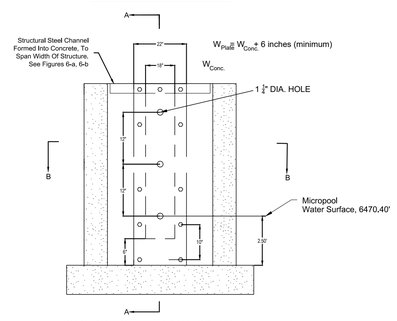

Circular Openings: W Obtained From Table 6a-1
Rectangular Openings: $W_{Conc.}$ = (Width of Rectangular Perforation W) + 12"
Rectangular Openings: $W_{Opening}$ (see Figure 6-b) Obtained From Table 6b-1

Note: Vertical WQCV Trash Racks are shown in Figures 6, 6-a, and 6-b for suggested standardized outlet design. Adverse-Slope Trash Rack design may be used for non-standardized designs, but must meet minimum design criteria.

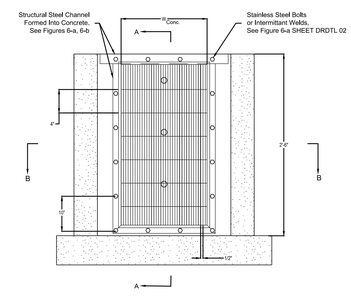

Elevation

WQCV Trash Racks:
1. Well-screen trash racks shall be stainless steel and shall be attached by intermittant welds along the edge of the mounting frame.
2. Bar grate trash racks shall be aluminum and shall be bolted using stainless steel hardware.
3. Trash Rack widths are for specified trash rack material. Finer well-screen or mesh size than specified is acceptable, however, trash rack dimensions need to be adjusted for materials having a different open area/gross area ratio (R value)
4. Structural design of trash rack shall be based on full hydrostatic head with zero head downstream of the rack.

Overflow Trash Racks:
1. All trash racks shall be mounted using stainless steel hardware and provided with hinged and lockable or boltable access panels.
2. Trash racks shall be stainless steel, aluminum, or steel. Steel trash racks shall be hot dip galvanized and may be hot powder painted after galvanizing.
3. Trash Racks shall be designed such that the diagonal dimension of each opening is smaller than the diameter of the outlet pipe.
4. Structural design of trash rack shall be based on full hydrostatic head with zero head downstream of the rack.

Urban Drainage and Flood Control District
Drainage Criteria Manual (V.3)
File: Details.dwg

Figure 4
Orifice Details for Draining WQCV

Urban Drainage and Flood Control District
Drainage Criteria Manual (V.3)
File: Details.dwg

Figure 6
Suggested WQCV Outlet Standardized Trash Rack Design

Know what's **below.** **Call** before you dig.

File Location Q:\DEN\Projects\0399-00 Mountain View Academy\Design\CDs\Civil\Phase II\on-site\DRAINAGE DETAILS.dwg Plot Date:2/7/2020 5:25 PM Last Saved By: FPAYNE

MERRICK®
Engineering | Architecture | Design-Build | Surveying | Planning | Geospatial Solutions
5970 GREENWOOD PLAZA BLVD. GREENWOOD VILLAGE, CO. 80111
303-751-0741
www.merrick.com

NATIONAL HERITAGE ACADEMIES®

REV	REVISION DESCRIPTION	DATE	CHKD	APPR

TITLE: MOUNTAIN VIEW ACADEMY
CIVIL CONSTRUCTION DOCUMENTS
DRAINAGE DETAILS

PE STAMP: ISSUED FOR REVIEW

FOR AND ON BEHALF OF MERRICK & COMPANY

JOB NUMBER 65120399
DATE 02/07/2020
SHEET C3.6
15 of 20

THIS AND ANY OTHER ELECTRONIC MEDIA COUNTERPART IS AN INSTRUMENT OF SERVICE PREPARED BY MERRICK AND COMPANY FOR A DEFINED PROJECT. IT IS NOT INTENDED OR REPRESENTED TO BE SUITABLE FOR REUSE IN WHOLE OR IN PART ON EXTENSIONS OF THE PROJECT OR ON ANY OTHER PROJECT. ANY REUSE WITHOUT WRITTEN VERIFICATION OR ADAPTATION BY MERRICK AND COMPANY FOR THE SPECIFIC PURPOSE INTENDED WILL BE AT THE USER'S SOLE RISK AND WITHOUT LIABILITY OR LIABILITY EXPOSURE TO MERRICK AND COMPANY.

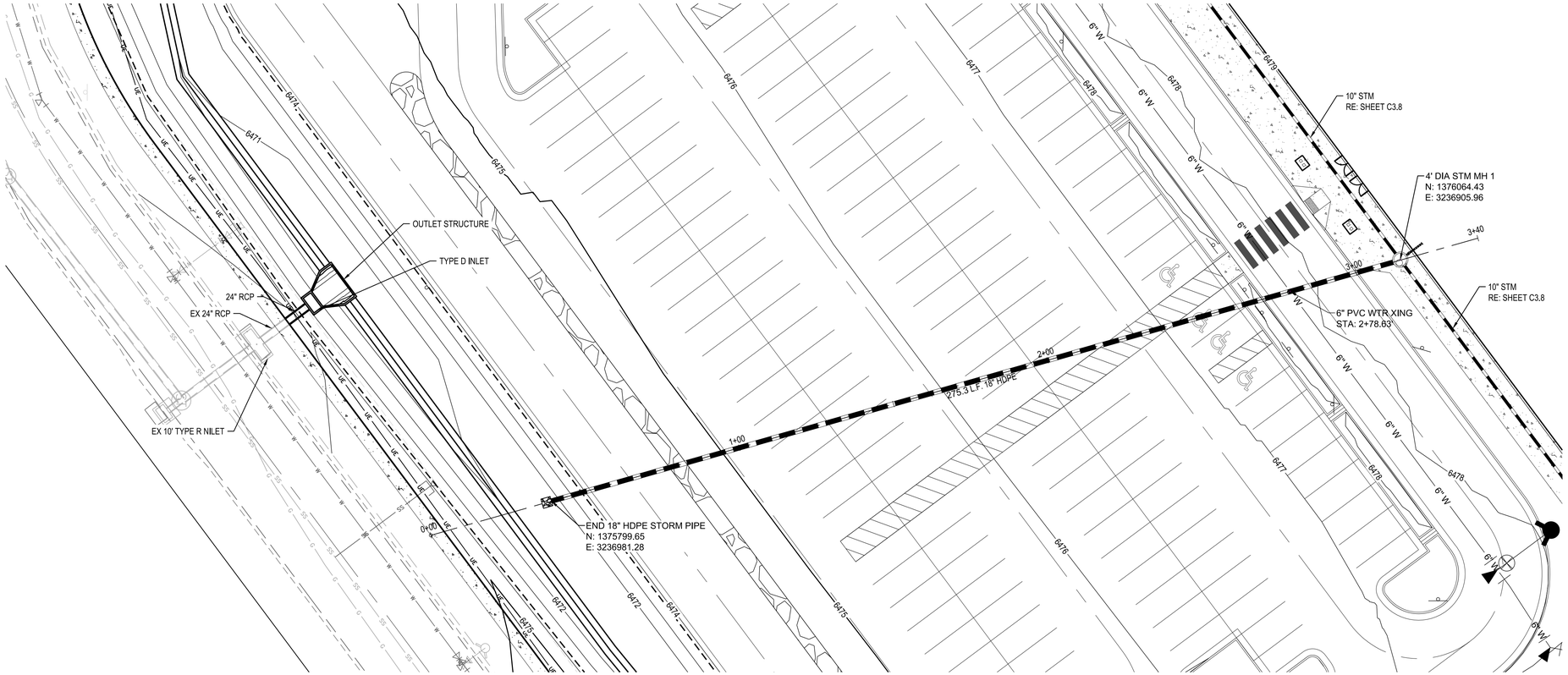

STORM

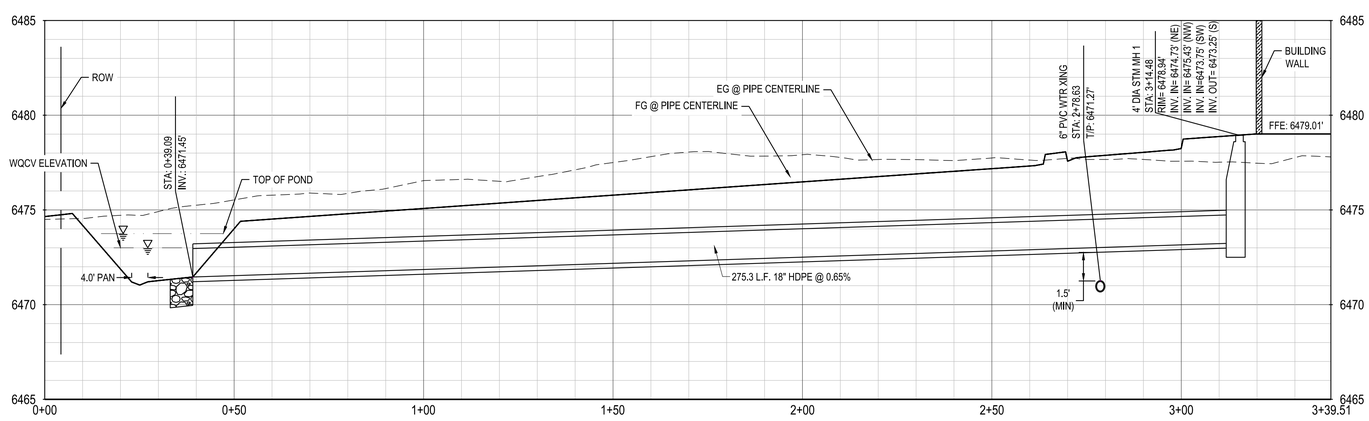

40' 0 20' 40' 80'

1" = 40' HOR.

Know what's **below.**
Call before you dig.

File Location:Q:\DEN\Projects\0399-00 Mountain View Academy\Design\CDs\Civil\Phase II\on-site\STORM PP.dwg Plot Date:2/7/2020 5:25 PM Last Saved By: FPAYNE

MERRICK®
Engineering | Architecture | Design-Build | Surveying | Planning | Geospatial Solutions
5970 GREENWOOD PLAZA BLVD. GREENWOOD VILLAGE, CO. 80111
303-751-0741
www.merrick.com

NATIONAL HERITAGE ACADEMIES

REV	REVISION DESCRIPTION	DATE	CHND	CHKD	APPR

TITLE
MOUNTAIN VIEW ACADEMY
CIVIL CONSTRUCTION DOCUMENTS
STORM PLAN AND PROFILE

PE STAMP
ISSUED FOR REVIEW
FOR AND ON BEHALF OF MERRICK & COMPANY

JOB NUMBER 65120399
DATE 02/07/2020
SHEET C3.7
16 of 20

THIS AND ANY OTHER ELECTRONIC MEDIA COUNTERPART IS AN INSTRUMENT OF SERVICE PREPARED BY MERRICK AND COMPANY FOR A DEFINED PROJECT. IT IS NOT INTENDED OR REPRESENTED TO BE SUITABLE FOR REUSE IN WHOLE OR IN PART ON EXTENSIONS OF THE PROJECT OR ON ANY OTHER PROJECT. ANY REUSE WITHOUT WRITTEN VERIFICATION OR ADAPTATION BY MERRICK AND COMPANY FOR THE SPECIFIC PURPOSE INTENDED WILL BE AT THE USER'S SOLE RISK AND WITHOUT LIABILITY OR LIABILITY OR LOSS EXPOSURE TO MERRICK AND COMPANY.

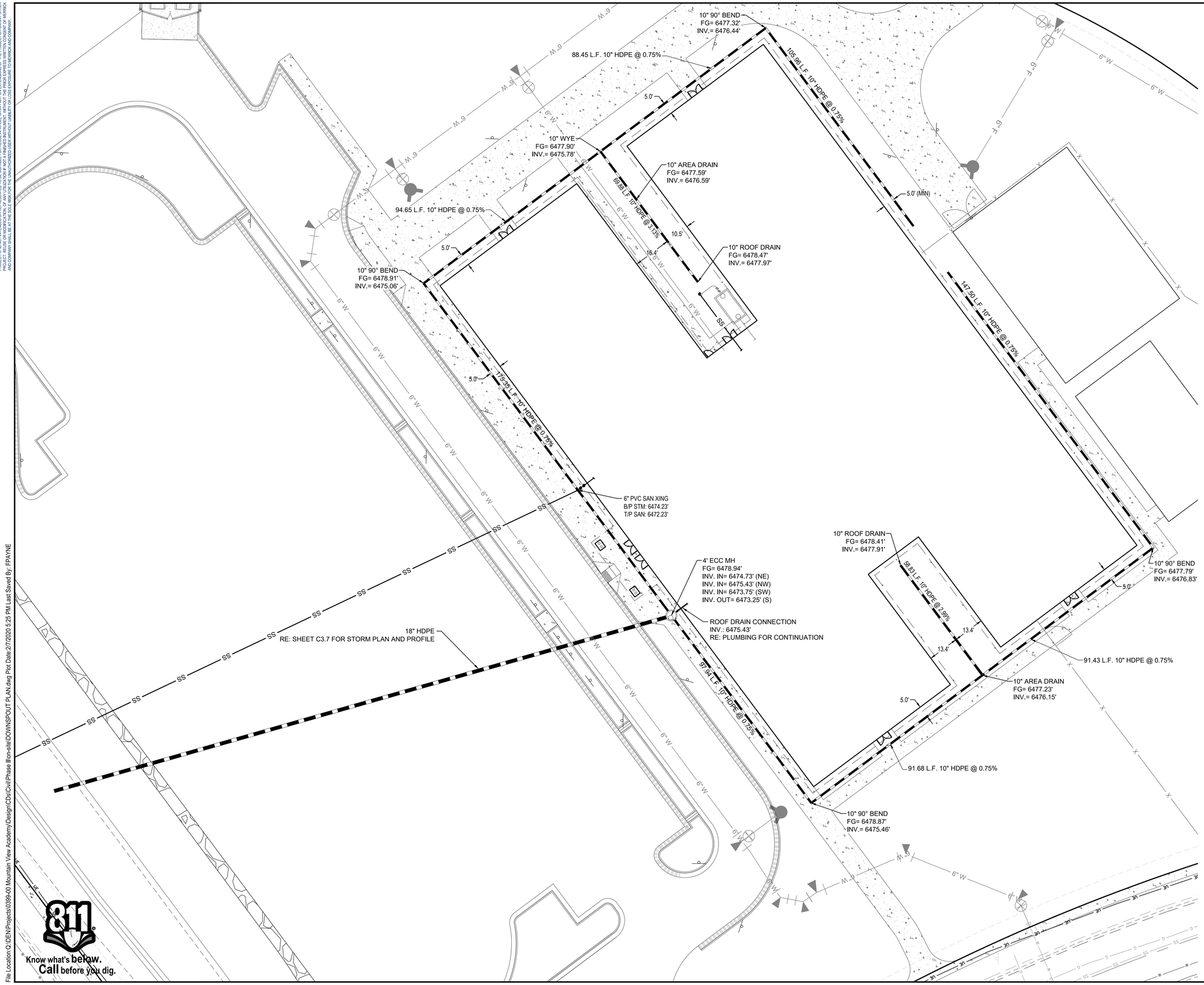

LEGEND

1. CONTRACTOR TO FIELD VERIFY DOWN SPOUT LOCATIONS AND CONNECT TO STORM SEWER.
2. AREA DRAINS TO BE 10" DOME NYPOPLAST GRATE INLET.

Know what's **below.**
Call before you dig.

File Location:Q:\DEN\Projects\0399-00 Mountain View Academy\Design\CDs\Civil\Phase II\on-site\DOWNSPOUT PLAN.dwg Plot Date:2/7/2020 5:25 PM Last Saved By: FPAYNE

MERRICK®
Engineering | Architecture | Design-Build | Surveying | Planning | Geospatial Solutions
5970 GREENWOOD PLAZA BLVD, GREENWOOD VILLAGE, CO, 80111
303-751-0741
www.merrick.com

NATIONAL HERITAGE ACADEMIES

REV	REVISION DESCRIPTION	DATE	CHND	CHKD	APPR

TITLE
MOUNTAIN VIEW ACADEMY
CIVIL CONSTRUCTION DOCUMENTS
ROOF DRAIN PLAN

PE STAMP
ISSUED FOR REVIEW
FOR AND ON BEHALF OF MERRICK & COMPANY

JOB NUMBER 65120399
DATE 02/07/2020
SHEET C3.8
17 of 20

THIS AND ANY OTHER ELECTRONIC MEDIA COUNTERPART IS AN INSTRUMENT OF SERVICE PREPARED BY MERRICK AND COMPANY FOR A DEFINED PROJECT. IT IS NOT INTENDED OR REPRESENTED TO BE SUITABLE FOR REUSE IN WHOLE OR IN PART ON EXTENSIONS OF THE PROJECT OR ON ANY OTHER PROJECT. ANY REUSE WITHOUT WRITTEN VERIFICATION OR ADAPTATION BY MERRICK AND COMPANY FOR THE SPECIFIC PURPOSE INTENDED WILL BE AT THE USER'S SOLE RISK AND WITHOUT LIABILITY OR LOSS EXPOSURE TO MERRICK AND COMPANY.

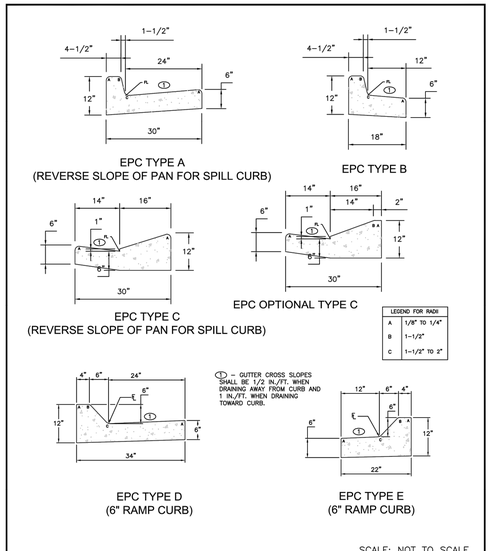

8/11/11 DATE APPROVED: André P. Brackin DEPARTMENT OF TRANSPORTATION	Typical Curb and Gutter Details Standard Drawing REVISION DATE: 12/8/15 FILE NAME: SD_2-20	EL PASO COUNTY DEPARTMENT OF TRANSPORTATION

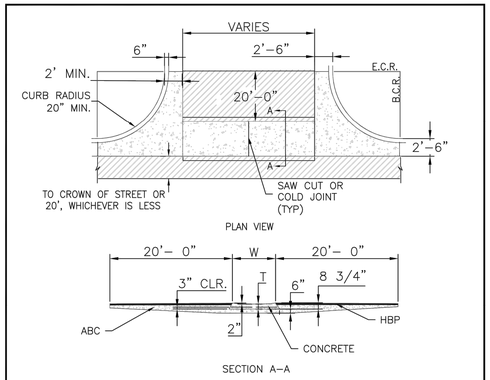

NOTES

1. W – WIDTH SHALL BE 6' FOR LOCAL, 8' FOR COLLECTORS, AND 10' FOR ARTERIAL ROADS.

2. T – SQUARED-OFF RETURN TO BE POURED MONOLITHICALLY, 8" PCC FOR LOCAL ROADS, 9" FOR COLLECTORS WITH 6x6 – 4.4 W.W.F. OR #4 REINFORCING BAR @ 18" EACH WAY.

3. ▨ = 3" MINIMUM ASPHALT DEPTH (2 LIFTS).

4. DESIGN TO SPECIFY ELEVATIONS AT PI AND PCR.

SCALE: NOT TO SCALE

8/11/11 DATE APPROVED: André P. Brackin DEPARTMENT OF TRANSPORTATION	Typical Cross Pan Layout Detail Standard Drawing REVISION DATE: 12/8/15 FILE NAME: SD_2-26	EL PASO COUNTY DEPARTMENT OF TRANSPORTATION

9/16/10 DATE APPROVED: André P. Brackin DEPARTMENT OF TRANSPORTATION	Pedestrian Intersection Ramp Detail Standard Drawing REVISION DATE: 11/10/04 FILE NAME: SD_2-40	EL PASO COUNTY DEPARTMENT OF TRANSPORTATION

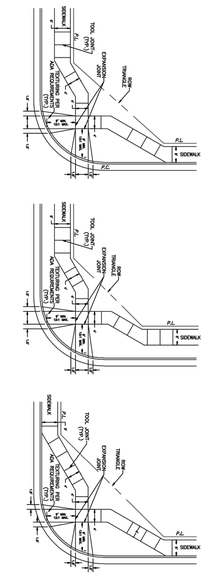

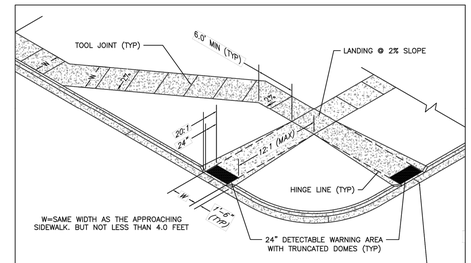

PEDESTRIAN RAMP NOTES

1. ALL WORK SHALL BE DONE IN ACCORDANCE WITH THE CURRENT ENGINEERING CRITERIA MANUAL AND ADA REQUIREMENTS.
2. CONTRACTOR TO NOTIFY ENGINEERING DIVISION INSPECTION STAFF 48 HOURS PRIOR TO CONCRETE PLACEMENT.
3. PEDESTRIAN RAMP CONSTRUCTION SHALL BE A MINIMUM 4,500 PSI CONCRETE, MINIMUM 4" THICK, NON-COLORED, NON-SCORED, COARSE BROOM FINISH.
4. RAMP LOCATION AND LENGTH MAY REQUIRE MODIFICATION TO MAINTAIN THE 12:1 MAXIMUM RUNNING RAMP SLOPE AND 20:1 DETECTABLE WARNING AREA DUE TO STREET INTERSECTION GRADES AND/OR ALIGNMENTS.
5. DETECTABLE WARNING AREA SHALL START A MINIMUM OF 6" BUT NOT MORE THAN 8" FROM THE FLOWLINE OF THE CURB AT ANY POINT.
6. DETECTABLE WARNING AREA SHALL BE PREFABRICATED, REDDISH INTEGRALLY COLORED, TRUNCATED-DOME, PAVERS. THERMOPLASTIC TRUNCATED DOMES WILL NOT BE ACCEPTED.
7. THE DETECTABLE WARNING AREA SHALL BE 24" IN LENGTH AND THE FULL WIDTH OF THE RAMP.
8. RAMP WIDTH REQUIRED IS SAME AS APPROACHING SIDEWALK; 4' MINIMUM.
9. ALL RAMPS WILL BE PERPENDICULAR TO TRAFFIC WITH THE EXCEPTION OF MID-BLOCK OR TERMINAL RAMPS WHICH MAY BE PARALLEL SUBJECT TO APPROVAL.
10. AVOID PLACING DRAINAGE STRUCTURES, TRAFFIC SIGNAL/SIGNAGE, UTILITIES/JUNCTION BOXES, OR OTHER OBSTRUCTIONS WITHIN PROPOSED RAMP AREAS.

GENERAL NOTES

1. WHERE THE 1'-6" FLARED SIDE(S) OF A PERPENDICULAR CURB RAMP IS (ARE) CONTIGUOUS WITH A PEDESTRIAN OR HARD SURFACE AREA, THE MAXIMUM FLARE SLOPE SHALL NOT EXCEED 10:1.
2. PEDESTRIAN WALKWAY AND/OR LOCATION OF EXISTING OR FUTURE PEDESTRIAN RAMPS ON OPPOSITE CORNERS SHALL BE REVIEWED BEFORE CONSTRUCTING NEW RAMPS.
3. AT MARKED PEDESTRIAN CROSSINGS, THE BOTTOM OF THE RAMPS, EXCLUSIVE OF THE FLARE SIDES, SHALL BE TOTALLY CONTAINED WITHIN THE MARKINGS.

7/9/09 DATE APPROVED: André P. Brackin DEPARTMENT OF TRANSPORTATION	Pedestrian Intersection Ramp Standard Drawing REVISION DATE: 12/8/15 FILE NAME: SD_2-41	EL PASO COUNTY DEPARTMENT OF TRANSPORTATION

TRUNCATED DOME DETAILS

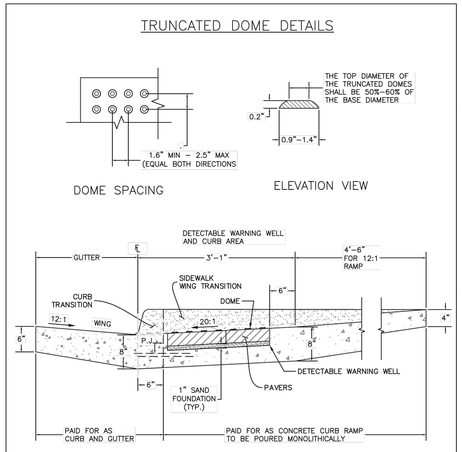

1/1/08 DATE APPROVED: John A. McCarty DEPARTMENT OF TRANSPORTATION	Truncated Dome Details Standard Drawing REVISION DATE: 11/25/15 FILE NAME: SD_2-42	EL PASO COUNTY DEPARTMENT OF TRANSPORTATION

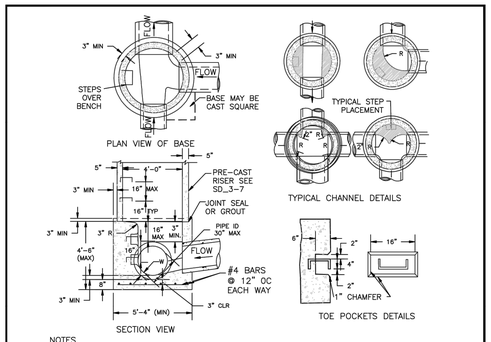

NOTES

1. TYPE II MANHOLES SHALL BE USED WHEN APPROPRIATE AND TYPICALLY WHEN THE PIPE SIZES ARE 30" OR LESS INSIDE DIAMETER.

2. VIEW AND DETAILS ARE TYPICAL. DESIGN ENGINEER SHALL DETERMINE MANHOLE BASE CONFIGURATION AND DIMENSIONS FOR PARTICULAR PIPE SIZES AND ALIGNMENT.

3. EITHER LADDER OF STEPS SHALL BE INSTALLED WHEN MANHOLE DEPTH EXCEEDS 30". STEPS IN BASE SHALL BE INSTALLED IN "TOE POCKETS" (SEE DETAIL THIS SHEET). LOWEST STEP SHALL BE A MAXIMUM OF 16" ABOVE THE FLOOR.

4. PIPES SHALL BE TRIMMED TO FINAL SHAPE AND SET BEFORE MANHOLE IS POURED.

5. BENCH SHALL BE SLOPED TOWARD CENTER OF MANHOLE BASE (4:1 MAX., ½" PER FOOT. MIN.).

6. FLOOR OF MANHOLE SHALL BE TROWELLED TO A SMOOTH, HARD SURFACE AND SHALL SLOPE TOWARDS THE OUTLET (8:1., ½" PER FT. MIN.) . FLOOR SHALL BE SHAPED AND CHANNELED; SEE DETAILS THIS SHEET.

SCALE: NOT TO SCALE

DATE APPROVED: André P. Brackin DEPARTMENT OF TRANSPORTATION	Storm Sewer Manhole Detail Type II Standard Drawing REVISION DATE: 11/10/04 FILE NAME: SD_3-2	EL PASO COUNTY DEPARTMENT OF TRANSPORTATION

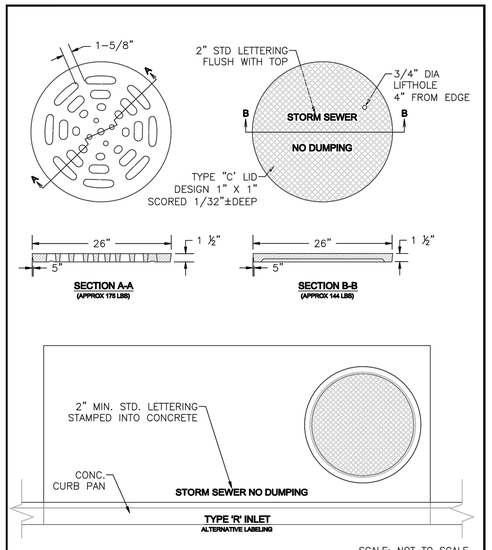

9/16/10 DATE APPROVED: André P. Brackin DEPARTMENT OF TRANSPORTATION	Storm Sewer Manhole Details Standard Drawing REVISION DATE: 9/16/10 FILE NAME: SD_3-5	EL PASO COUNTY DEPARTMENT OF TRANSPORTATION

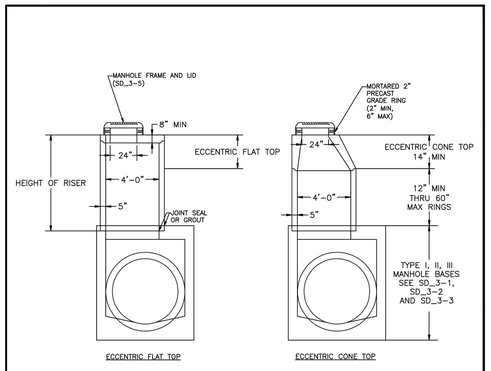

NOTES

1. ALL WORK SHALL BE DONE IN ACCORDANCE WITH THE STANDARD AND SUPPLEMENTAL SPECIFICATIONS APPLICABLE TO THE PROJECT.
2. PRECAST RISERS SHALL CONFORM TO ASTM C478.
3 STEPS SHALL BE INSTALLED WHEN MANHOLE DEPTH EXCEEDS 30". STEPS SHALL BE CAST IRON OR EXTRUDED ALUMINUM, 1000 LB CAPACITY, 12" WIDE WITH NON-SKID GROOVES AND DROP FRONT ON SAFETY NOSES, IN ACCORDANCE WITH APPROVED OSHA REQUIREMENTS.

SCALE: NOT TO SCALE

8/11/11 DATE APPROVED: André P. Brackin DEPARTMENT OF TRANSPORTATION	Storm Sewer Manhole Riser and Cover Detail Standard Drawing REVISION DATE: 11/23/04 FILE NAME: SD_3-7	EL PASO COUNTY DEPARTMENT OF TRANSPORTATION

Know what's below. Call before you dig.

File Location: Q:\DEN\Projects\0399-00 Mountain View Academy\Design\CDs\Civil\Phase II\on-site\DETAILS.dwg Plot Date:2/7/2020 5:26 PM Last Saved By: FPAYNE

MERRICK®
Engineering | Architecture | Design-Build | Surveying | Planning | Geospatial Solutions
5970 GREENWOOD PLAZA BLVD. GREENWOOD VILLAGE, CO. 80111
303-751-0741
www.merrick.com

NATIONAL HERITAGE ACADEMIES®

REV	REVISION DESCRIPTION	DATE	CHKD	APPR

TITLE:
MOUNTAIN VIEW ACADEMY
CIVIL CONSTRUCTION DOCUMENTS
STANDARD DETAILS

RE-STAMP:
ISSUED FOR REVIEW
FOR AND ON BEHALF OF MERRICK & COMPANY

JOB NUMBER 65120399
DATE 02/07/2020
SHEET C4.0
18 of 20

THIS AND ANY OTHER ELECTRONIC MEDIA COUNTERPART IS AN INSTRUMENT OF SERVICE PREPARED BY MERRICK AND COMPANY FOR A DEFINED PROJECT. IT IS NOT INTENDED OR REPRESENTED TO BE SUITABLE FOR REUSE IN WHOLE OR IN PART ON EXTENSIONS OF THE PROJECT OR ON ANY OTHER PROJECT. ANY REUSE WITHOUT WRITTEN VERIFICATION OR ADAPTATION BY MERRICK AND COMPANY FOR THE SPECIFIC PURPOSE INTENDED WILL BE AT THE USER'S SOLE RISK AND WITHOUT LIABILITY OR LOSS EXPOSURE TO MERRICK AND COMPANY.

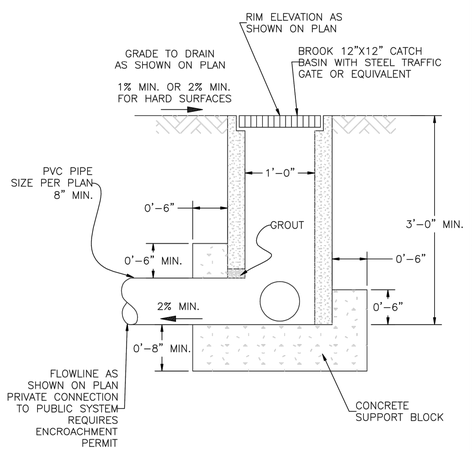

SCALE: NOT TO SCALE

8/11/11	Grate Inlet for Common Areas (guidance)	
DATE APPROVED:	Standard Drawing	
André P. Brackin	REVISION DATE: 11/10/04	FILE NAME: SD_3-8
DEPARTMENT OF TRANSPORTATION		

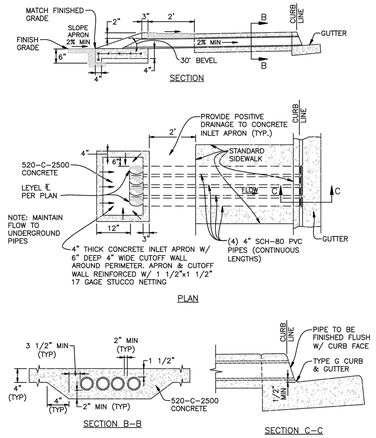

SCALE: NOT TO SCALE

8/11/11	Sidewalk Underdrain With Curb Outlet Detail	
DATE APPROVED:	Standard Drawing	
André P. Brackin	REVISION DATE: 11/10/04	FILE NAME: SD_3-24
DEPARTMENT OF TRANSPORTATION		

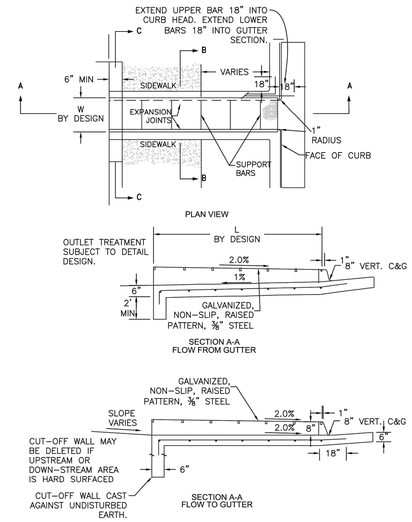

SCALE: NOT TO SCALE

8/11/11	Curb Opening with Drainage Chase Detail 1 of 2	
DATE APPROVED:	Standard Drawing	
André P. Brackin	REVISION DATE: 12/8/15	FILE NAME: SD_3-25
DEPARTMENT OF TRANSPORTATION		

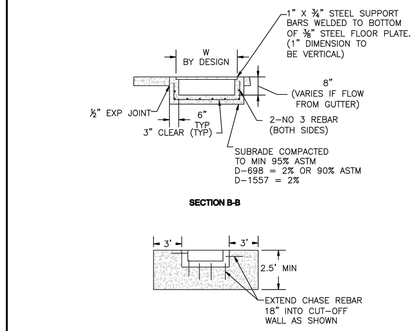

SCALE: NOT TO SCALE

8/11/11	Curb Opening with Drainage Chase Detail 2 of 2	
DATE APPROVED:	Standard Drawing	
André P. Brackin	REVISION DATE: 11/10/04	FILE NAME: SD_3-25A
DEPARTMENT OF TRANSPORTATION		

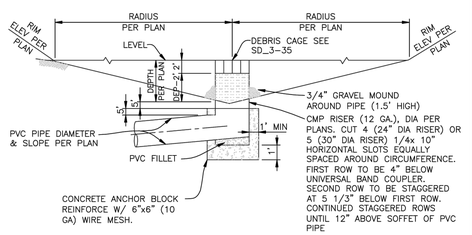

SCALE: NOT TO SCALE

8/11/11	Desilting Basin Outlet	
DATE APPROVED:	Standard Drawing	
André P. Brackin	REVISION DATE: 11/10/04	FILE NAME: SD_3-30
DEPARTMENT OF TRANSPORTATION		

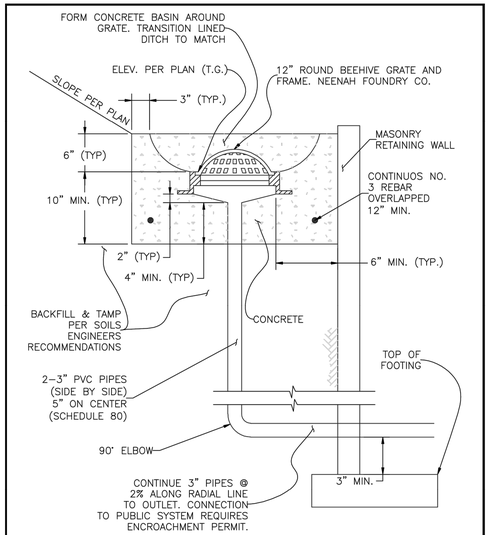

SCALE: NOT TO SCALE

8/11/11	Beehive Grate Detail (guidance)	
DATE APPROVED:	Standard Drawings	
André P. Brackin	REVISION DATE: 11/10/04	FILE NAME: SD_3-48
DEPARTMENT OF TRANSPORTATION		

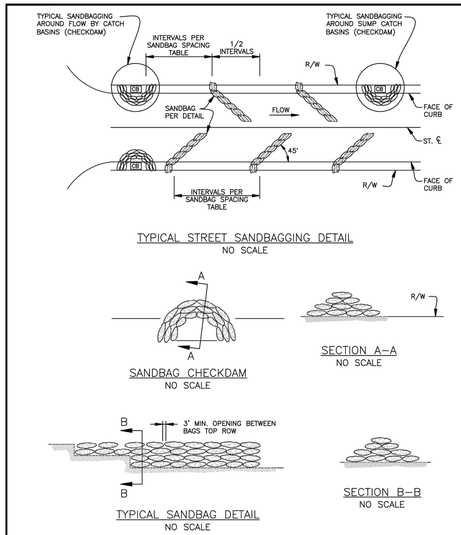

SCALE: NOT TO SCALE

8/11/11	Temporary Street Sandbag Detail and Section	
DATE APPROVED:	Standard Drawing	
André P. Brackin	REVISION DATE: 11/10/04	FILE NAME: SD_3-60
DEPARTMENT OF TRANSPORTATION		

Know what's **below.** **Call** before you dig.

File Location:Q:\DEN\Projects\0399-00 Mountain View Academy\Design\CDs\Civil\Phase II\on-site\DETAILS.dwg Plot Date:2/7/2020 5:26 PM Last Saved By: FPAYNE

MERRICK®
Engineering / Architecture / Design-Build / Surveying / Planning / Geospatial Solutions
5970 GREENWOOD PLAZA BLVD. GREENWOOD VILLAGE, CO. 80111
303-751-0741
www.merrick.com

NATIONAL HERITAGE ACADEMIES®

REV	REVISION DESCRIPTION	DATE	CHND	CHKD	APPR

TITLE: MOUNTAIN VIEW ACADEMY
CIVIL CONSTRUCTION DOCUMENTS
STANDARD DETAILS

RE-STAMP: ISSUED FOR REVIEW

FOR AND ON BEHALF OF MERRICK & COMPANY

JOB NUMBER: 65120399
DATE: 02/07/2020
SHEET: C4.1
19 of 20

THIS AND ANY OTHER ELECTRONIC MEDIA COUNTERPART IS AN INSTRUMENT OF SERVICE PREPARED BY MERRICK AND COMPANY FOR A DEFINED PROJECT. IT IS NOT INTENDED OR REPRESENTED TO BE SUITABLE FOR REUSE IN WHOLE OR IN PART ON EXTENSIONS OF THE PROJECT OR ON ANY OTHER PROJECT. ANY REUSE WITHOUT WRITTEN VERIFICATION OR ADAPTATION BY MERRICK AND COMPANY FOR THE SPECIFIC PURPOSE INTENDED WILL BE AT THE USER'S SOLE RISK AND WITHOUT LIABILITY OR LOSS EXPOSURE TO MERRICK AND COMPANY.

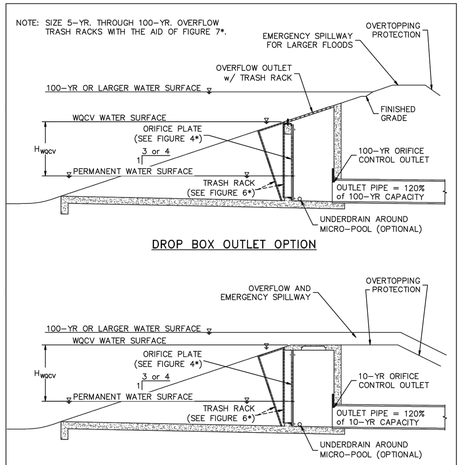

DROP BOX OUTLET OPTION

OVERTOPPING SPILLWAY OPTION

*FIGURES 4, 6 and 7 ARE IN THE CITY OF COLORADO SPRINGS ENGINEERING DIVISION'S DRAINAGE CRITERIA MANUAL, VOLUME 2.

1/1/08 DATE APPROVED: John A. McCarty DEPARTMENT OF TRANSPORTATION	Typical WQCV Outlet Structure Profiles Including 100-Year Detention Standard Drawing REVISION DATE: 7/16/07 FILE NAME: SD_3-83	EL PASO COUNTY DEPARTMENT OF TRANSPORTATION

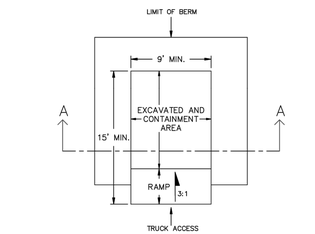

PLAN VIEW

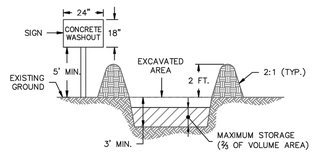

SECTION A-A

NOTES:
1. SIGN MATERIAL, EXCAVATION, AND RESTORATION ARE INCLUDED IN THE COST OF THE CONCRETE WASHOUT STRUCTURE.
2. EROSION BALES MAY BE USED AS AN ALTERNATIVE FOR THE BERM.

1/1/08 DATE APPROVED: John A. McCarty DEPARTMENT OF TRANSPORTATION	Concrete Washout Structure Standard Drawing REVISION DATE: 7/17/07 FILE NAME: SD_3-84	EL PASO COUNTY DEPARTMENT OF TRANSPORTATION

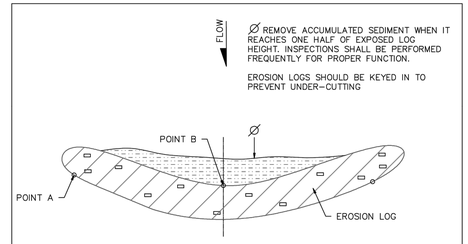

PLAN VIEW

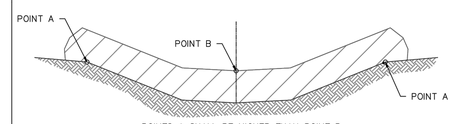

POINTS A SHALL BE HIGHER THAN POINT B

ELEVATION
EROSION LOG DETAIL DITCH INSTALLATION
NOTE: EROSION LOGS SHALL BE TIGHTLY ABUTTED WITH NO GAPS.

1/1/08 DATE APPROVED: John A. McCarty DEPARTMENT OF TRANSPORTATION	Erosion Log Check Dams Standard Drawing REVISION DATE: 7/17/07 FILE NAME: SD_3-85	EL PASO COUNTY DEPARTMENT OF TRANSPORTATION

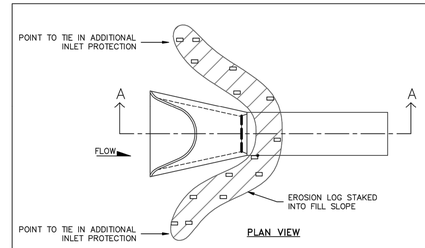

PLAN VIEW

NOTE:
Ø REMOVE ACCUMULATED SEDIMENT WHEN IT REACHES ONE HALF OF EXPOSED LOG HEIGHT. INSPECTIONS SHALL BE PERFORMED FREQUENTLY FOR PROPER FUNCTION.

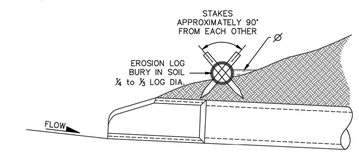

SECTION A-A

EROSION PROTECTION ABOVE CULVERT OUTLETS IS SIMILAR

EROSION LOGS SHOULD BE KEYED IN TO PREVENT UNDER-CUTTING

1/1/08 DATE APPROVED: John A. McCarty DEPARTMENT OF TRANSPORTATION	Culvert Inlet and Outlet Protection Erosion Logs Above Inlets and Outlets For Slopes 3:1 or Steeper Standard Drawing REVISION DATE: 7/17/07 FILE NAME: SD_3-86	EL PASO COUNTY DEPARTMENT OF TRANSPORTATION

MERRICK®
Engineering | Architecture | Design-Build | Surveying | Planning | Geospatial Solutions
5970 GREENWOOD PLAZA BLVD. GREENWOOD VILLAGE, CO. 80111
303-751-0741
www.merrick.com

NATIONAL HERITAGE ACADEMIES®

REV	REVISION DESCRIPTION	DATE	CHKD	APPR

TITLE:
MOUNTAIN VIEW ACADEMY
CIVIL CONSTRUCTION DOCUMENTS
STANDARD DETAILS

PE STAMP
ISSUED FOR REVIEW

FOR AND ON BEHALF OF MERRICK & COMPANY

JOB NUMBER 65120399
DATE 02/07/2020
SHEET C4.2
20 of 20

Know what's below. Call before you dig.

File Location:Q:\DEN\Projects\0399-00 Mountain View Academy\Design\CDs\Civil\Phase II\on-site\DETAILS.dwg Plot Date:2/7/2020 5:26 PM Last Saved By: FPAYNE