BURNS McDONNELL

Stormwater Management Plan

Cherokee Metropolitan District

TDS Reduction Facility
Project No. 119461

Revision 1
December 2020

PCD Filing No.: PPR-20-044

Stormwater Management Plan

prepared for

Cherokee Metropolitan District
TDS Reduction Facility
El Paso County, Colorado

Project No. 119461

December 2020

prepared by

Burns & McDonnell Engineering Company, Inc.
Denver, CO

Name	Organization	Contact Phone Number
Applicant (Owner/Operator)		
Amy Lathen	Cherokee Metropolitan District	719-433-5540
SWMP Preparer		
Joshua Lee, P.E.	Burns & McDonnell Engineering Company, Inc.	303-826-9882
SWMP Administrator		
Reese Werden, CDOT Transportation Erosion Control Supervisor (#6CD7A2B6)	Garney Construction	720-854-4881
Contractor		
David Staats	Garney Construction	661-803-8784

TABLE OF CONTENTS

Page No.

LIST OF TABLES

Page No.

LIST OF FIGURES

LIST OF ABBREVIATIONS

Abbreviation	Term/Phrase/Name
BMP	Best Management Practice
Cherokee	Cherokee Metropolitan District
CMs	Control Measures
CMP	Corrugated Metal Pipe
CDPHE	Colorado Department of Public Health and Environment
CFR	Code of Federal Regulations
EPA	U.S. Environmental Protection Agency
ESCP	Erosion and Sediment Control Plans
ESQCP	Erosion and Stormwater Quality Control Permit
EURV	Excess Urban Runoff Volume
MS4	Municipal Separate Storm Sewer System
NPDES	National Pollutant Discharge Elimination System
Permit	General Permit No. COR4000000
Project	TDS Reduction Facility
SDS	Safety Data Sheet
SWMP	Stormwater Management Plan
TDS	Total Dissolved Solids
WRF	Water Reclamation Facility
WQCV	Water Quality Capture Volume

1.0 INTRODUCTION

The U.S. Environmental Protection Agency (EPA) requires a National Pollutant Discharge Elimination System (NPDES) Permit for stormwater discharges from construction activities that disturb 1 or more acres of land or from smaller sites that are part of a larger, common plan of development or sale which will disturb a cumulative total of 1 or more acres. For the purposes of the NPDES program, construction activities are defined as clearing, grubbing, grading, and excavation.

In the State of Colorado, the NPDES program has been delegated to the Colorado Department of Public Health and Environment (CDPHE). Construction projects that will disturb 1 or more acres of land are issued a certificate of coverage under CDPHE General Permit COR400000 (Permit), which authorizes the discharge of stormwater associated with construction activities into State waters. The Permit was issued on April 1, 2019 and will expire at midnight on March 31, 2024. The Permit is included in Appendix A. However, municipalities that have been issued a Municipal Separate Storm Sewer System (MS4) permit by the governing authority may authorize stormwater discharges within the boundary of the MS4 permit. El Paso County (the County) is in possession of an MS4 Permit (COR090011) that was updated on July 1, 2019 and expires on June 30, 2024, which transfers governing authority to the County. No renewals of the Permit or MS4 Permit will be required during the length of the project.

Stormwater discharges from construction activities associated with the Total Dissolved Solids (TDS) Reduction Facility for the Cherokee Metropolitan District Water Reclamation Facility (WRF) will be permitted under the 2019 MS4 Permit issued to the County. Coverage under the Permit is obtained by developing a Stormwater Management Plan (SWMP) and submitting the application to the County at least 14 days prior to ground disturbance. The County will issue an Erosion and Stormwater Quality Control Permit (ESQCP) upon approval of the SWMP. Copies of the issued ESQCP, Notice of Intent submittal to CDPHE, and the Stormwater Discharge Permit issued by CDPHE shall be added to Appendix B upon receipt of these documents.

The SWMP described herein establishes a plan to manage the quality of stormwater runoff from construction activities associated with the Project. This SWMP has been developed for the Project in accordance with requirements and guidelines specified in the El Paso County Engineering Criteria Manual, Revision 6, the City of Colorado Springs Drainage Criteria Manual, Volume 2, and the El Paso County Addendum.

This SWMP is to be used by onsite construction personnel to reduce soil erosion and to minimize the potential for sediment and other onsite pollutants to leave the Project area and enter waters of the State of

Colorado. The SWMP identifies a set of control measures (CMs) to be implemented on the Project site; however, CMs must be moved, added, or redesigned as needed to control erosion and sedimentation to the extent practicable. The SWMP must be updated and revised when stormwater CMs are modified due to a change in design, construction method, operation, maintenance procedure, etc.

The existing Cherokee WRF currently has a discharge permit issued by the CDPHE and has developed and received approval for a SWMP to maintain compliance with the discharge permit. This SWMP only covers operational activities at the existing WRF and should not be referenced for stormwater management related to the construction of the TDS Reduction Facility. If any spills occur from potential pollutant sources associated with the existing WRF, such as the diesel generator, or fuel tank biosolids loading and transport, the existing SWMP should be referenced for protocols.

1.1 Project Description and Location

The Project involves the construction of a TDS Reduction Facility (the Project) downstream of the Cherokee WRF in El Paso County, Colorado. The Project site is located at 19174 East Drennan Road, Colorado Springs, Colorado 80930 (38.751810, -104.471407). The Project is located in the southwest quarter of Section 8 of Township 35 South, Range 63 West. The Project is anticipated to disturb approximately 95 acres. A project site vicinity map is included as Figure 1. Land-disturbing construction activities are anticipated to begin November 2020 and are anticipated to be completed by March 2023.

1.2 Project Owner and Operator

The owner and operator, Cherokee Metropolitan District (Cherokee), will be responsible for completing the Project. Below is the contact information for Cherokee Metropolitan District:

Jeffrey K. Munger
Cherokee Metropolitan District
6250 Palmer Park Boulevard
Colorado Springs, Colorado 80915
Phone: (719) 597-5080

The Signatory Authority for the Project is Amy Lathen, General Manager, who can be reached at (719) 433-5540. The contractor site contact for the Project is David Staats, who can be reached at (661) 803-8784.

1.2.1 Retention of Records

The following records shall be maintained on the construction site in the construction trailer from the date of initiation until final stabilization is complete:

- The approved SWMP

- Revisions to the SWMP
- All reports required by the permit
- All completed inspection forms required by the permit. Inspection forms should be signed by the qualified Inspector (see Section 3.4)
- Records of all data used to complete the SWMP

1.2.2 Revisions to the SWMP

The SWMP is designed to be a "living document" that should be revised as site conditions change throughout the life of the project. Additionally, if a CM is determined to be insufficient, the SWMP should be revised to include effective CMs. Revision to this SWMP must be recorded on the Record of Revisions form provided in Appendix G.

1.2.3 Notice of Termination

When construction is complete and final stabilization has been achieved (see Section 3.3), the ESQCP permit holder is responsible for contacting El Paso County and requesting closure of the permit in writing. A copy of the Construction Stormwater Inactivation Notice that has been submitted to CDPHE must be included with the request to terminate. A copy of the termination request and acceptance from El Paso County should be added to Appendix B upon completion of the project.

2.0 CONSTRUCTION ACTIVITIES AND SITE DESCRIPTION

The following sections include a description of the Project construction activities as well as information regarding the natural and biological resources in and adjacent to the Project area(s).

2.1 Description of Construction Activities

Cherokee is constructing a TDS Reduction Facility at the Cherokee WRF in El Paso County, Colorado. The property is approximately 160 acres in area and construction activities are assumed to cover approximately 95 acres. The current area of disturbance at the site must be updated on the SWMP as changes occur. All proposed site improvements are presented on the Erosion and Sediment Control Plans (ESCP) in Appendix C. Construction activities will include minor demolition activities, clearing and grubbing, and construction of seven evaporation ponds on the western half of the property. These evaporation ponds and access roads for the ponds will encompass approximately 50 acres in area. As part of earthwork construction, a permanent engineered grass swale will be installed to the east of the evaporation ponds, as well as two culverts that will drain into the grass swale. An existing detention pond will be outfitted with an outlet structure and emergency spillway. All disturbed areas that are not finished with gravel, pavement, concrete, or other surfaces will be seeded and mulched.

Additionally, new facilities will be installed as part of the TDS Reduction Facility and some existing facilities will be modified. This includes the construction of a new Headworks Building and Grit Removal Basins, installation of a Membrane Bio-Reactor Basin and Filtrate Tank, and construction of a Filter Building and Chemical Building. Piping will also be installed as part of construction of these facilities. Finally, two existing Bio Reactors will be modified and site electrical will be installed.

Appropriate erosion and sediment CMs must be installed prior to the start of construction and maintained (or repaired and replaced as necessary) throughout construction, until permanent vegetative cover has been established.

2.2 Sequence of Major Construction Activities

The following is a chronological list of the planned sequence of activities and implementation of erosion and sediment CMs for Project construction:

Table 2-1: Construction Schedule

No.	Task	Dates	CM Implementation
1	Mobilization	11/30/2020 – 12/14/2020	Install temporary erosion controls prior to any site disturbance, including silt fence, sediment control logs, concrete washout, stabilized staging area, and vehicle tracking control. Stockpile management will be implemented. Non-structural CMs, such as protection of existing vegetation and street sweeping will be implemented during this task and carried out through the entire construction process.
2	Sitework and Evaporation Ponds	12/29/2020 – 7/14/2022	Permanent CMs, including grass swale, inlet/outlet protection, and outlet structure will be installed during earthwork activities. Check dams and erosion control blanket will be installed after swale is constructed and seeded/mulched. One evaporation pond will be partially graded at the same time as the grass swale to act as a temporary sediment pond, but will be regraded as the remaining evaporation ponds are constructed. The swale shall be constructed and stabilized prior to any other earthwork activities. The temporary swale crossing shall be installed after the swale is stabilized. Dewatering station will be constructed prior to any dewatering activities. Seeding and mulching will take place after the completion of Task No. 2.
3	Headworks and Grit Removal Basins	1/6/2021 – 7/26/2022	Silt fence, sediment control logs, concrete washout, stabilized staging area, and vehicle tracking control will be required for this task. These will be installed during Task No. 1. This task will include earthwork, concrete construction, and possibly construction dewatering.
4	MBR Basin and Filtrate Tank Construction	2/3/2021 – 11/2/2022	Silt fence, sediment control logs, concrete washout, stabilized staging area, and vehicle tracking control will be required for this task. These will be installed during Task No. 1. This task will include earthwork and concrete construction, and possibly construction dewatering.
5	Filter Building Construction	2/24/2021 – 8/30/2022	Silt fence, sediment control logs, concrete washout, stabilized staging area, and vehicle tracking control will be required for this task. These will be installed during Task No. 1. This task will include earthwork and concrete construction, and possibly construction dewatering.
6	Chemical Building Construction	5/5/2021 – 9/16/2022	Silt fence, sediment control logs, concrete washout, stabilized staging area, and vehicle tracking control will be required for this task. These will be installed during Task No. 1. This task will include earthwork and concrete construction, and possibly construction dewatering.

No.	Task	Dates	CM Implementation
7	Yard Pipe Construction	5/21/2021 – 1/14/2022	Silt fence, sediment control logs, stabilized staging area, and vehicle tracking control will be required for this task. These will be installed during Task No. 1. This task will include earthwork and possibly construction dewatering.
8	Bio Reactor 1 and 2 Modification	6/3/2021 – 10/17/2022	The concrete washout will be required for this task, which will be installed during Task No. 1. This task will include concrete construction and no earthwork.
9	Site Electrical	12/9/2021 – 6/13/2022	No earthwork or concrete construction will be conducted during this task. All temporary CMs will still be installed during this task, as implemented during Task No. 1.
10	Demobilization	1/31/2023 – 2/13/2023	All construction materials, including temporary CMs will be removed from site during this task.
11	Final Stabilization	3/30/2023	The date of final stabilization. Most seeding and mulching will take place by the completion of Task No. 2. Additional seeding and mulching will take place as earthwork is completed during Tasks No. 3-9. No additional final stabilization is required.

2.3 Soils and Vegetation

According to the U. S. Department of Agriculture, Natural Resources Conservation Service (NRCS), Web Soil Survey of El Paso County, Colorado, three soil types are present at the Project site. These soil types are detailed in Table 2-2 and depicted on the Soils Report provided in Appendix E.

The erosion K factor, with possible values ranging from 0.02 to 0.69, signifies how susceptible a soil is to sheet and rill erosion by water. The larger the K value, the more susceptible the soil is to erosion.

Table 2-2: Soils within the Project Site

Soil Type	Map Unit Symbol	Erosion K Factor[a]	Hydrologic Soil Group[b]
Ascalon sandy loam, 3 to 9 percent slopes	3	0.28	B
Bijou loamy sand, 1 to 8 percent slopes	5	0.28	A
Olnest sandy loam, 0 to 3 percent slopes	124	0.28	B

Source: U.S. Department of Agriculture, Natural Resources Conservation Service, *Web Soil Survey*. Accessed August 10, 2020, from *http://websoilsurvey.nrcs.usda.gov/app/WebSoilSurvey.aspx*.

(a) Specific erosion K factors were not available for each soil type, so the chosen K factors were selected by comparing site specific soil properties to a list of "benchmark" soils and K factors provided in NRCS Agricultural Handbook No. 703.

(b) Hydrologic soil group indicates the infiltration rate of the soil: Group A at > 0.30 inch/hour, Group B at 0.15-0.30 inch/hour, Group C at 0.05-0.15 inch/hour, and Group D at 0.00-0.05 inch/hour.

A study of aerial photography and research of existing documentation and photos determined that vegetation covers approximately 50 percent of the site. Vegetation at the site consists of field grasses and weeds. No trees, shrubs, or bushes are present.

2.4 Potential Pollutants

The potential pollutant sources for this project include:

- Disturbed and stored soils
- Vehicle tracking
- Loading and unloading operations
- Vehicle and equipment maintenance and fueling
- Dust generation
- Concrete truck/equipment washing
- Portable toilets and trash

CMs must be used to control erosion and sedimentation and are discussed in further detail in Chapter 3.0. CMs for product-specific practices are discussed in Chapters 4.0 and 5.0.

2.5 Site Maps and Drawings

The Project site and CM details are depicted on the ESCP, which is included in Appendix C. A Vicinity Map is provided as Figure 1. Soils occurring within the Project site are depicted on the Soils Report provided in Appendix E.

2.6 Receiving Waters

Site runoff generally flows to the south toward Drennan Road. Some runoff is intercepted by an existing detention basin. All runoff from the central and western portions of the site is ultimately discharged underneath Drennan Road via a 12-inch corrugated metal pipe (CMP) culvert and carried to the southeast away from the site. Runoff from the eastern half of the site flows across the undisturbed area of the property and discharges at the southeast corner of the site. The run-off will ultimately flow to the Black Squirrel Creek, which is located southeast of the site. Dry Squirrel Creek discharges into the Arkansas River.

No established streams are present in the project area. However, two defined drainage ditches are present on the west side of the site. These ditches flow toward the southeast and carry runoff off the site.

3.0 CONTROL MEASURES

The following sections include information regarding the proposed erosion and sediment CMs to be used on the Project site during construction until final stabilization is achieved. *The City of Colorado Springs Drainage Criteria Manual Volume 2* was used to establish the suggested CM's discussed below. All CM's will be installed during the phases presented on the ESCP in Appendix C.

3.1 Structural Control Measures

Soil erosion and sediment CMs are used to reduce the amount of soil particles carried from a land area and deposited in receiving waters. Based on field conditions at the time of construction, the authorized contractor or subcontractors may adjust the locations and types of CMs so that erosion and sedimentation are controlled to the extent practicable. If adjustments are made, then this SWMP must be modified accordingly; however, in no case will modifications to the SWMP result in less stringent erosion and sediment CMs than specified herein. Revision to this SWMP must be recorded on the Record of Revisions form provided in Appendix G.

Several factors should be considered when selecting appropriate erosion and sediment CMs:

- Size of the affected area
- Type of proposed construction activities
- Soil type and texture
- Amount of rock
- Steepness and length of slope
- Amount of vegetative cover
- Proximity to watercourses or wetlands, particularly downslope from construction activities
- Date and intensity of the last major rain event
- Anticipated weather conditions and frozen ground

Applicable soil erosion and sediment CMs must be implemented in accordance with this SWMP and the Permit prior to commencing field construction activities. Measures must be maintained during and after construction activities until final stabilization of the soil is achieved. Upon final stabilization of disturbed areas, temporary CMs must be removed.

Erosion and sediment CMs must be in place prior to the initiation of soil-disturbing activities and must be maintained throughout construction. As work progresses, the contractor or subcontractor may need CMs in other locations of the Project site to keep sediment from leaving the construction area. These CMs will

be determined in the field; if they are changed, the SWMP must be modified accordingly. Temporary CMs must be removed after the protected area meets the requirements for final stabilization.

This project does not rely on CMs owned or operated by another entity.

3.1.1 Stabilized Staging Area

A 2-acre stabilized staging area will be located to the east of the site entrance to serve as a location for storing equipment, materials, trailers, etc. This area will also serve as a location to park vehicles. The staging area will be stabilized with 3-inches of 2-4" aggregate to reduce tracking of mud and sediment runoff. Additionally, the staging area will be contained within the site's perimeter silt fence. The stabilized staging area shall be constructed, organized, and maintained in accordance with the detail provided in the ESCP in Appendix C. Additional information about the stabilized staging area are included in Appendix D. The stabilized staging area will be installed during the first phase of construction.

3.1.2 Sediment Control Logs

Sediment control logs may be used in addition to the perimeter silt fence (Section 3.1.7) when additional protection is required. Additionally, sediment control logs will be used as necessary during grading activities for additional protection. Sediment control logs should be installed in a way that will not produce concentrated flows. Sediment control logs shall be properly trenched, anchored, and tightly jointed in accordance with the details provided in Appendix D. Sediment control logs must be inspected and maintained on a regular basis, and sediment buildup must be removed when sediment reaches one-half of the height of the barrier.

3.1.3 Rock Socks

Rock socks will be used as perimeter control and as check dams during construction of paved areas and buildings. Rock socks shall not be utilized as perimeter control for an area larger than 0.25 acres. Additional information and requirements for the installation and maintenance of rock socks is included in the BMP details in Appendix D.

3.1.4 Inlet and Outlet Protection

Outlet protection helps to reduce erosion downstream of a pipe, culvert, slope drain, or other conveyance. Outlet protection will be installed at one culvert in the middle of the project site that carries stormwater from the overhead electrical easement area to the engineered swale. Additionally, riprap projection will be installed at the site outfall, which is the inlet for the culvert at the southern edge of the site that carries

stormwater under Drennan road and off the property. Outlet protection will also be installed downstream of the concrete drain pans that will be installed near the WRF facilities. Rock socks will be installed as inlet protection for culverts. The location and installation details for the temporary inlet and outlet protection areas are provided in the ESCP in Appendix C. Additional information about riprap inlet and outlet protection is included in the Best Management Practice (BMP) details in Appendix D.

3.1.5 Vehicle Tracking Control

Vehicle tracking controls provide stabilized construction site access where vehicles exit the site onto paved public roads. FODS Trackout Control Mats will be utilized for vehicle tracking control at the project site. Mats will be installed at the construction site entrance, the entrance to the concrete washout area, the entrance to the stabilized staging area, and the entrance to the evaporation pond grading area. Location, installation, and maintenance details for vehicle tracking controls are provided in the ESCP in Appendix C. Additional information about vehicle tracking control is included in the BMP details in Appendix D.

3.1.6 Concrete Washout

Concrete wash water will be discharged to an engineered concrete washout. The concrete washout will be located within the stabilized staging area. The proposed location of the washout is not within road and ditch rights-of-way or within streams or wetlands or areas of shallow groundwater. Additionally, the washout systems will not be located at least 50 feet from creeks, wetlands, ditches, karst features, and storm drains/manmade conveyance systems. The concrete washout shall be constructed, organized, and maintained in accordance with the detail provided in the ESCP in Appendix C. Additional information about the concrete washout is included in the BMP details in Appendix D.

Use of asphalt or concrete batch plants is not anticipated for this Project.

3.1.7 Silt Fence

During all stages of construction, silt fence will be installed around the perimeter of the area of disturbance to intercept and retain sediment carried by sheet flow and to limit sediment-laden runoff from leaving the site during construction. Additionally, silt fence may be installed along a contour to control overland sheet flow. The fence will not be installed in areas of concentrated flow. The silt fence shall be installed and maintained in accordance with the detail provided in the ESCP in Appendix C. Additional information about the silt fence is included in the BMP details in Appendix D.

3.1.8 Grass Swale

A permanent swale will be constructed along the eastern edge of the grading area to redirect stormwater around the proposed evaporation ponds and to the site outfall. Check dams will be installed within the grass swale as discussed in Section 3.1.9. The swale will be installed and maintained in accordance with the ESCP (Appendix C). Additional information about design, installation, and maintenance of grass swales is included in the BMP details in Appendix D. The grass swale will be permanently seeded when the site undergoes final stabilization (See Section 3.3).

3.1.9 Temporary Swale Crossing

A temporary crossing will be installed in the swale at the location indicated on the ESCP (Appendix C). The temporary crossing will allow for equipment passage until the evaporation pond and access road grading is complete. The crossing will be removed after all grading associated with the evaporation ponds is complete. The temporary swale crossing may be a culvert crossing, stream ford, or temporary bridge. Additional information about design, installation, and maintenance of temporary swale crossings is included in the BMP details in Appendix D.

3.1.10 Temporary Sediment Pond

One evaporation pond will be utilized as a temporary sediment pond during grading activities at the location indicated on the ESCP (Appendix C). The basin will not be installed in an active stream and will be installed and maintained in accordance with the BMP details in Appendix D.

3.1.11 Check Dam

Rock check dams will be installed in the engineered swale that will be installed around the east side of the evaporation ponds. Check dams will be installed perpendicular to the flow line of the swale to reduce flow velocity and trap sediment. Check dams will be placed in the swale at the interval shown on the plans in Appendix A and will be installed immediately after the swale is graded. The rock check dams will be installed and maintained in accordance with the detail provided in the ESCP in Appendix C. Additional information about the check dams is included in the BMP details in Appendix D.

3.1.12 Extended Detention Basin

An existing detention pond located on the southern edge of the property will be modified as part of this project. The basin will be installed with an outlet structure designed to retain of the Water Quality Capture Volume (WQCV) and the Excess Urban Runoff Volume (EURV). The detention basin will receive runoff primarily from the WRF buildings and infrastructure. The location and proposed grading

plan for the detention basin is included in the ESCP in Appendix C. Additional information about design and maintenance of extended detention basins is included in the BMP details in Appendix D.

3.1.13 Stockpile Management

One material stockpile shall be located at the northeast corner of the construction site and be contained within the perimeter silt fence. The location of the stockpile is presented in the ESCP in Appendix C. Additional information about stockpile management is included in the BMP details in Appendix D.

3.2 Non-Structural Control Measures

Non-structural stormwater management practices are those CMs that would be left in place after construction is finished and the site is stabilized to manage stormwater volume, flow, and/or quality. Stormwater drainage culverts and inlets will remain in place to manage stormwater on the Project site after construction is complete. Topsoil and subsoil for unpaved areas will be returned to the same stratification.

3.2.1 Protection of Existing Vegetation

Care shall be taken to contain the limits of disturbance to the areas presented on the ESCP (Appendix C). This will primarily be accomplished by the installation of the perimeter silt fence (see Section 3.1.6), which will mark the proposed limits of disturbance. If vegetation outside of the limits of construction is disturbed, it will be revegetated in accordance with this SWMP. Additional information about protection of existing vegetation is included in the BMP details in Appendix D.

3.2.2 Construction Phasing/Sequencing

Construction phasing shall be determined to minimize erosion and sediment transport. CM's will be adjusted during each phase. The ESCP in Appendix C present the construction phasing and changes in structural CM's over the life of the project. Additionally, care shall be taken to disturb only the locations where construction is taking place at any time. Additional information about construction phasing/sequencing is included in the BMP details in Appendix D.

3.2.3 Construction Dewatering

If dewatering becomes necessary, the contractor will submit to Cherokee a dewatering plan including appropriate CMs, prior to any dewatering activities. Dewatering must be completed in such a way as to minimize turbidity, including the use of filter bags or other appropriate measures. Dewatering waters will not be discharged to any wetlands or in a way that could cause erosion or scouring. Dewatering will not be allowed without Cherokee's approval.

3.2.4 Street Sweeping and Vacuuming

Street sweeping or vacuuming will be utilized as necessary to remove sediment from paved areas, primarily around the site entrance. Sediment will not be washed away into drainage facilities. After street sweeping is conducted, drainage facilities will be inspected to determine if sediment has migrated into them.

3.3 Final Stabilization

After final grading is complete, the disturbed areas not containing, concrete, riprap, crushed rock, evaporation pond liner, etc. must be permanently seeded and mulched for vegetative stabilization. Topsoil and subsoil for unpaved areas will be returned to the same stratification. Culvert inlet and outlet protections, check dams, the engineered swale, and the extended detention basin will remain in place to manage stormwater on the project site after construction is complete.

Temporary CMs must be left in place until the site is stabilized with a uniform vegetative cover of 70 percent density of pre-disturbed levels. Trapped sediment and other disturbed soil areas resulting from the removal of temporary CMs must also be permanently stabilized to limit further erosion and sedimentation.

3.3.1 Seeding

The owner is responsible for labor, materials, tools, equipment, and other related items required for ground preparation, sowing of seeds, laying of sod, fertilizing, mulching, and top dressing. It is the contractor's responsibility to check that the soil seedbed is not blown, washed, or otherwise removed from the site. The contractor must make repairs, including replacement of lost topsoil and mulch, to the seedbed preparation site in the event of heavy rain, wind, or other natural events causing damage. Seeding efforts will be compliant with Section 212 of the Colorado Department of Transportation "Standard Specifications for Road and Bridge Construction". The extent of area to be seeded is presented in the ESCP in Appendix C. Additional seeding information is provided in the BMP details in Appendix D.

3.3.2 Mulching

Mulching will be utilized to stabilize soils during final stabilization after seeding. Mulch shall be hydraulically applied hydro-mulch or seed and seed grass hay or grain straw. The extent of area to be mulched is presented in the ESCP in Appendix C. Additional information, including installation and maintenance requirements, is provided in the BMP details in Appendix D.

3.3.3 Erosion Control Blanket

Erosion control blanket shall be installed in the grass swale after the swale has been seeded and mulched. The extent of the area requiring erosion control blanket is presented in the ESCP in Appendix C. The erosion control blanket should be inspected regularly to check the integrity of the fabric. Additional information, including installation and maintenance requirements is provided in the BMP details in Appendix D.

3.4 Maintenance and Inspections

Erosion and sediment CMs must be installed and maintained pursuant to the ESCP in Appendix C and the BMP details provided in Appendix D. Erosion and sediment CMs, waste and construction storage areas, drainage areas, locations where stormwater can flow from the Project site, and permanent and temporarily stabilized areas must be inspected a minimum of once every 14 calendar days and after signification precipitation events. During each inspection, the inspector must complete and sign the City of Colorado Springs Inspection Checklist located in Appendix F. All completed inspection forms must be maintained on-site and available to County inspectors. The inspector must be a registered professional engineer in Colorado or a certified erosion control specialist.

If inspection results indicate a need to modify the SWMP, then the plan must be revised and implemented, as appropriate, following the inspection. All modifications must be noted on the Record of Revisions form located in Appendix G. The inspection reports must identify any incidents of noncompliance with the Permit.

An initial inspection will be conducted by a County Engineering Inspector. The Inspector must be contacted 48 hours prior to scheduling the inspection. The initial phase of CMs must be installed prior to the inspection. Periodic compliance inspections, reconnaissance inspections, complaint response inspections, and follow-up inspections may also be conducted at the discretion of the County. Additionally, a final inspection will be conducted after the completion of final stabilization. The final inspection must be scheduled with a County Engineering Inspector 48 hours before the inspection. The following items will be checked during the final inspection:

- If established CMs are effective in preventing sediment from leaving the site or entering drainageways
- All work has been done in accordance with the approved plans and the site has undergone final stabilization

- Vegetative cover has been established at a density of at least 70 percent compared to the site conditions prior to construction.
- All temporary CMs have been removed appropriately
- All approved permanent CMs have been installed according to the plans
- All construction materials have been removed from the site
- All paved surfaces on and off the site are clean and free of sediment
- Sediment and debris have been removed from drainage structures on and off site and all damaged property caused by construction have been restored

4.0 GOOD HOUSEKEEPING

The practices described below must be followed by the Project contractor and subcontractors to protect stormwater and surrounding surface waters from contamination by construction-related pollutants.

4.1 Material Handling

Construction materials posing a potential contamination threat (e.g., petroleum products, solvents) must be managed to minimize exposure to stormwater. Materials must be kept in secure containers and properly labeled. A copy of the Safety Data Sheet (SDS) for each chemical/fuel used onsite must be maintained at the Project site. Materials must be stored away from drainage courses and low areas.

4.2 Solid and Liquid Waste Disposal

Solid and liquid waste (including sediment, asphalt, concrete millings, floating debris, paper, plastic, fabric, and construction and demolition debris) must be disposed of properly and in accordance with applicable Federal, State, and local disposal requirements. Waste material must be collected and stored in a secure container and removed from the Project site. Waste containers should be inspected regularly.

4.3 Hazardous Waste

Hazardous materials must be used, stored, transported, and disposed of in the manner specified by the manufacturer and by Federal, State, and local regulations. The contractor and subcontractors must be made aware of this requirement and must alert site personnel of this requirement. Spill response procedures are provided in Chapter 5.0.

4.4 Sanitary Waste

The contractor and subcontractors must comply with State and local portable toilet regulations. The contractor and subcontractors must provide portable sanitary facilities for their crews throughout construction. Toilets must not be placed within 10 feet or storm inlets, within 50 feet of state waters, or in low areas. Additionally, toilets must be positioned so they are secured on all four corners and cannot be tipped over. Sanitary facilities must be serviced regularly, cleaned on a weekly basis, and inspected daily for spills.

4.5 Non-Stormwater Discharges

The MS4 Permit authorizes certain non-stormwater discharges unless they are identified as pollutant sources. If construction dewatering is required, uncontaminated groundwater from dewatering activities will be generated during grading and structural construction activities.

4.6 Vehicle Washing

Vehicle washing must not be conducted at sites of active construction. If vehicle washing is required, then a designated area must be selected where runoff can be contained and properly disposed of. If concrete trucks are necessary, then concrete washout water must be discharged to a concrete washout; surplus concrete or drum wash must not be discharged to waters of the State of Colorado.

5.0 SPILL PREVENTION AND CONTROL

This section describes measures to prevent, control, and minimize impacts from a spill of a hazardous, toxic, or petroleum substance during construction of the Project. It also describes the transport, storage, and disposal procedures for the potentially hazardous or toxic materials to be used on the Project site and outlines the procedures to be followed in the event of a spill of a contaminating or toxic substance.

5.1 Material Management Practices

The proper use and storage of materials and equipment, along with the use of common sense, greatly reduce the potential for contaminating stormwater runoff. The following list of good housekeeping practices should be implemented during the duration of the Project:

- Hazardous materials, chemicals, fuels, and oils should not be stored within 100 feet of a stream bank, wetland, water supply well, spring, or other waterbody.
- Fueling of construction equipment should not be conducted within 100 feet of a stream bank, wetland, water supply well, spring, or other waterbody.
- The minimum amount of hazardous or toxic materials should be stored onsite.
- Onsite materials should be stored in a neat, orderly manner, in appropriate containers, and under a roof or other enclosure.
- Products should be kept in original containers with the original manufacturer's label.
- Substances should not be mixed with one another unless recommended by the manufacturer.
- Whenever possible, a container's entire contents should be used prior to container disposal.
- If surplus product must be disposed of, then the manufacturer's or State- and local-recommended methods for proper disposal should be followed.
- Removal of all open or expired surplus liquid materials (opened paint can, partially used containers of solvent, expired epoxy materials, etc.) from the Project site is the responsibility of the contractor or subcontractor.

5.1.1 Non-Petroleum Products

Due to the chemical makeup of specific products, certain handling and storage procedures are required to promote the safety of handlers and limit the possibility of pollution. Care should be taken to follow directions and warnings for products used on the Project site. Pertinent information can be found on the SDS for each product. The SDS for each product used onsite must be kept at the Project site.

5.1.2 Petroleum Products

Onsite vehicles should be monitored for leaks and receive regular maintenance to reduce the chance of leakage. Petroleum products must be stored in tightly sealed, clearly labeled containers. If feasible, the containers should be stored in a covered truck or trailer that provides secondary containment.

Bulk storage tanks with a capacity greater than 55 gallons must have secondary containment. Containment can be provided by temporary earthen berms lined with plastic sheeting or other means approved by Cherokee. After each rainfall event, the inspector must inspect the contents of the secondary containment area for excess water. If no sheen is visible, then the collected water can be pumped to the ground in a manner that does not cause scouring. If sheen is present, then the water must be treated prior to discharge or must be transported and disposed of offsite in accordance with Federal, State, and local requirements.

Bulk fuel or lubricating oil dispensers should not have a self-locking mechanism that allows for unsupervised fueling. Fueling operations should be observed to detect and contain spills immediately.

No waste oil or other petroleum-based products will be disposed of onsite (e.g., buried or poured), but must be taken offsite for proper disposal.

5.2 Spill Control and Cleanup

In addition to the material management practices discussed previously, the following spill control and cleanup practices must be used to limit stormwater pollution in the event of a spill:

- The contractor and subcontractors must make onsite personnel aware of cleanup procedures and the location of spill equipment.
- Spills must be contained and cleaned up immediately after discovery.
- Manufacturer's methods for spill cleanup of a material must be followed, as described on the material's SDS.
- Materials and equipment needed for cleanup procedures must be kept readily available onsite, either at an equipment storage area or on contractors' or subcontractors' trucks; equipment to be kept onsite should include, but not be limited to, brooms, dust pans, shovels, granular absorbents, sand, saw dust, absorbent pads and booms, plastic and metal trash containers, gloves, and goggles.
- Toxic, hazardous, or petroleum product spills required to be reported by regulation must be documented to the appropriate Federal, State, and local authorities.

- Spills must be documented, and a record of spills must be kept with this SWMP.

The Federal reportable spill quantities for hazardous materials are listed in 40 CFR Part 302.4, *List of Hazardous Substances and Reportable Quantities*. A procedure for determining a reportable spill is included in Appendix H.

In the State of Colorado, "any spill or discharge of hazardous substances or oil which may cause pollution of the waters of the state", must be reported. Reporting must be done within 24 hours from the time the permittee becomes aware of the circumstances.

If a spill occurs onsite, then the contractor's or subcontractor's superintendent must initiate spill response, including measures to localize the spill impact via containment. Reese Werden, Garney Project Engineer, must be notified within 15 minutes of discovering the spill. Mr. Werden will implement spill response procedures to document the spill and provide guidance and support necessary to remediate the spill. Garney will be responsible for contacting the following authorities as necessary:

- Federal
  - National Response Center: (800) 424-8802
- State
  - CDPHE 24-hour Spill Reporting Line: 1-877-518-5608

5.3 Dedicated Batch Plants

No dedicated batch plants will be installed on site, so no spill prevention and response procedures are required.

FIGURES

U.S. DEPARTMENT OF THE INTERIOR
U.S. GEOLOGICAL SURVEY

The National Map US Topo

FIGURE 1

ELLICOTT QUADRANGLE
COLORADO - EL PASO COUNTY
7.5-MINUTE SERIES

Produced by the United States Geological Survey
North American Datum of 1983 (NAD83)
World Geodetic System of 1984 (WGS84). Projection and
1 000-meter grid:Universal Transverse Mercator, Zone 13S

This map is not a legal document. Boundaries may be generalized for this map scale. Private lands within government reservations may not be shown. Obtain permission before entering private lands.

Imagery.....NAIP, August 2017 - January 2018
Roads..... U.S. Census Bureau, 2016
Names.....GNIS, Not Available
Hydrography.....National Hydrography Dataset, 1899 - 2018
Contours.....National Elevation Dataset, 2003 - 2007
Boundaries.....Multiple sources; see metadata file 2017 - 2018
Public Land Survey System.....BLM, 2018
Wetlands.....FWS National Wetlands Inventory 1974 - 1976

MN
GN
7°42´
137 MILS
0°21´
6 MILS
UTM GRID AND 2019 MAGNETIC NORTH DECLINATION AT CENTER OF SHEET

U.S. National Grid
100,000 - m Square ID
ED
'00
EC
Grid Zone Designation 13S

SCALE 1:24 000

KILOMETERS 1 0.5 0 1 2
METERS 1000 500 0 1000 2000
MILES 1 0.5 0 1
FEET 1000 0 1000 2000 3000 4000 5000 6000 7000 8000 9000 10000

CONTOUR INTERVAL 20 FEET
NORTH AMERICAN VERTICAL DATUM OF 1988

This map was produced to conform with the National Geospatial Program US Topo Product Standard, 2011.
A metadata file associated with this product is draft version 0.6.18

COLORADO
QUADRANGLE LOCATION

1	2	3
4		5
6	7	8

1 Falcon
2 Haegler Ranch
3 Holcolm Hills
4 Corral Bluffs
5 Big Springs Ranch
6 Fountain NE
7 Hanover NW
8 Hanover NE

ADJOINING QUADRANGLES

ROAD CLASSIFICATION
Expressway
Secondary Hwy
Ramp
Local Connector
Local Road
4WD
Interstate Route
US Route
State Route

ELLICOTT, CO
2019

NSN 7643016358822
NGA REF NO. USGSX24K14102

APPENDIX A - CDPHE CONSTRUCTION GENERAL PERMIT COR400000

STATE OF COLORADO

COLORADO DEPARTMENT OF PUBLIC HEALTH AND ENVIRONMENT
Water Quality Control Division

CDPS GENERAL PERMIT

STORMWATER DISCHARGES ASSOCIATED WITH

CONSTRUCTION ACTIVITY

AUTHORIZATION TO DISCHARGE UNDER THE

COLORADO DISCHARGE PERMIT SYSTEM (CDPS)

In compliance with the provisions of the Colorado Water Quality Control Act, (25-8-101 et seq., CRS, 1973 as amended) and the Federal Water Pollution Control Act, as amended (33 U.S.C. 1251 et seq.; the "Act"), this permit authorizes the discharge of stormwater associated with construction activities (and specific allowable non-stormwater discharges in accordance with Part I.A.1. of the permit) certified under this permit, from those locations specified throughout the State of Colorado to specified waters of the State.

Such discharges shall be in accordance with the conditions of this permit. This permit specifically authorizes the facility listed on the certification to discharge in accordance with permit requirements and conditions set forth in Parts I and II hereof. All discharges authorized herein shall be consistent with the terms and conditions of this permit.

This permit becomes effective on April 1, 2019, and shall expire at midnight March 31, 2024.

Issued and signed this 1st day of November 2018.

COLORADO DEPARTMENT OF PUBLIC HEALTH AND ENVIRONMENT

Ellen Howard Kutzer, Permits Section Manager
Water Quality Control Division

Permit History
Originally signed and issued October 31, 2018; effective April 1, 2019.

Table of Contents

Part I
Note: At the first mention of terminology that has a specific connotation for the purposes of this permit, the terminology is electronically linked to the definitions section of the permit in Part I.E.

A. COVERAGE UNDER THIS PERMIT

1. Authorized Discharges

   This general permit authorizes permittee(s) to discharge the following to state waters: stormwater associated with construction activity and specified non-stormwater associated with construction activity. The following types of stormwater and non-stormwater discharges are authorized under this permit:

   a. Allowable Stormwater Discharges

      i. Stormwater discharges associated with construction activity.

      ii. Stormwater discharges associated with producing earthen materials, such as soils, sand, and gravel dedicated to providing material to a single contiguous site, or within ¼ mile of a construction site (i.e. borrow or fill areas)

      iii. Stormwater discharges associated with dedicated asphalt, concrete batch plants and masonry mixing stations (Coverage under this permit is not required if alternative coverage has been obtained.)

   b. Allowable Non-Stormwater Discharges

      The following non-stormwater discharges are allowable under this permit if the discharges are identified in the stormwater management plan in accordance with Part I.C. and if they have appropriate control measures in accordance with Part I.B.1.

      i. Discharges from uncontaminated springs that do not originate from an area of land disturbance.

      ii. Discharges to the ground of concrete washout water associated with the washing of concrete tools and concrete mixer chutes. Discharges of concrete washout water must not leave the site as surface runoff or reach receiving waters as defined by this permit.

      iii. Discharges of landscape irrigation return flow.

   c. Emergency Fire Fighting

      Discharges resulting from emergency firefighting activities are authorized by this permit.

2. Limitations on Coverage

   Discharges not authorized by this permit include, but are not limited to, the discharges and activities listed below. Permittees may seek individual or alternate general permit coverage for the discharges, as appropriate and available.

   a. Discharges of Non-Stormwater

Discharges of non-stormwater, except the authorized non-stormwater discharges listed in Part I.A.1.b., are not eligible for coverage under this permit.

b. Discharges Currently Covered by another Individual or General Permit

c. Discharges Currently Covered by a Water Quality Control Division (division) Low Risk Guidance Document

3. Permit Certification and Submittal Procedures

a. Duty to apply
The following activities shall apply for coverage under this permit:

i. Construction sites that will disturb one acre or more; or

ii. Construction sites that are part of a common plan of development or sale; or

iii. Stormwater discharges that are designated by the division as needing a stormwater permit because the discharge:

(a) Contributes to a violation of a water quality standard; or

(b) is a significant contributor of pollutants to state waters.

b. Application Requirements
To obtain authorization to discharge under this permit, applicants applying for coverage following the effective date of the renewal permit shall meet the following requirements:

i. Owners and operators submitting an application for permit coverage will be co-permittees subject to the same benefits, duties, and obligations under this permit.

ii. Signature requirements: Both the owner and operator (permittee) of the construction site, as defined in Part I.E., must agree to the terms and conditions of the permit and submit a completed application that includes the signature of both the owner and the operator. In cases where the duties of the owner and operator are managed by the owner, both application signatures may be completed by the owner. Both the owner and operator are responsible for ensuring compliance with all terms and conditions of the permit, including implementation of the stormwater management plan.

iii. Applicants must use the paper form provided by the division or the electronic form provided on the division's web-based application platform when applying for coverage under this permit.

iv. The applicant(s) must develop a stormwater management plan (SWMP) in accordance with the requirements of Part I.C. The applicant(s) must also certify that the SWMP is complete, or will be complete, prior to commencement of any construction activity.

v. The applicant(s) must submit a complete, accurate, and signed permit application electronically, by mail or hand delivery to the division at least 10 days prior to the commencement of construction activity except that construction activities that are in response to a public emergency related site shall apply for coverage no later than 14 days after the commencement of construction activities. The provisions of this part in no way remove a violation of the Colorado Water Quality Control Act if a point source discharge occurs prior to the issuance of a CDPS permit.

vi. The application must be signed in accordance with the requirements of Part IA. Applications submitted by mail or hand delivered should be directed to:

Colorado Department of Public Health and Environment
Water Quality Control Division
Permits Section, WQCD-PS-B2
4300 Cherry Creek Drive South
Denver, CO 80246

vii. The applicant(s) must receive written notification that the division granted permit coverage prior to conducting construction activities except for construction activities that are in response to a public emergency related site

c. Division Review of Permit Application

Within 10 days of receipt of the application, and following review of the application, the division may:

i. Issue a certification of coverage;

ii. request additional information necessary to evaluate the discharge;

iii. delay the authorization to discharge pending further review;

iv. notify the applicant that additional terms and conditions are necessary; or

v. deny the authorization to discharge under this general permit.

d. Alternative Permit Coverage

i. Division Required Alternate Permit Coverage:
The Division may require an applicant or permittee to apply for an individual permit or an alternative general permit if it determines the discharge does not fall under the scope of this general permit. In this case, the Division will notify the applicant or permittee that an individual permit application is required.

ii. Permittee Request for alternate permit coverage:
A permittee authorized to discharge stormwater under this permit may request to be excluded from coverage under this general permit by applying for an individual permit. In this case, the permittee must submit an individual application, with reasons supporting the request, to the Division at least 180 days prior to any discharge. When an individual permit is issued, the permittee's authorization to discharge under this permit is terminated on the effective date of the individual permit.

e. Submittal Signature Requirements

Documents required for submittal to the division in accordance with this permit, including applications for permit coverage and other documents as requested by the division, must include signatures by both the owner and the operator, except for instances where the duties of the owner and operator are managed by the owner.

Signatures on all documents submitted to the division as required by this permit must meet the Standard Signatory Requirements in Part II.K. of this permit in accordance with 40 C.F.R. 122.41(k).

i. Signature Certification
Any person(s) signing documents required for submittal to the Division must make the following certification:

"I certify under penalty of law that this document and all attachments were prepared under my direction or supervision in accordance with a system designed to assure that qualified personnel properly gather and evaluate the information submitted. Based on my inquiry of the person or persons who manage the system, or those persons directly responsible for gathering the information, the information submitted is, to the best of my knowledge and belief, true, accurate, and complete. I am aware that there are significant penalties for submitting false information, including the possibility of fine and imprisonment for knowing violations."

f. Compliance Document Signature Requirements
Documents which are required for compliance with the permit, but for which submittal to the division is not required unless specifically requested by the division, must be signed by the individual(s) designated as the Qualified Stormwater Manager, as defined in Part I.E.

i. Any person(s) signing inspection documents required for compliance with the permit must make the following statement:

"I verify that, to the best of my knowledge and belief, all corrective action and maintenance items identified during the inspection are complete, and the site is currently in compliance with the permit."

g. Field Wide Permit Coverage for Oil and Gas Construction
At the discretion of the division, a single permit certification may be issued to a single oil and gas permittee to cover construction activity related discharges from an oil and gas field at multiple locations that are not necessarily contiguous.

h. Permit Coverage without Application
Qualifying Local Program: When a small construction site is within the jurisdiction of a qualifying local program, the owner and operator of the construction activity are authorized to discharge stormwater associated with small construction activity under this general permit without the submittal of an application to the division. Sites covered by a qualifying local program are exempt from the following sections of this general permit:

Part I.A.3.a.; Part I.A.3.b.; Part I.A.3.c.; Part I.A.3.d.; Part I.A.3.g.; Part I.A.3.i.; Part I.A.3.j.; Part I.A.3.k.

Sites covered by a qualifying local program are subject to the following requirements:

i. Local Agency Authority: This permit does not pre-empt or supersede the authority of local agencies to prohibit, restrict, or control discharges of stormwater to storm drain systems or other water courses within their jurisdiction.

ii. Permit Coverage Termination: When a site under a Qualifying Local Program is finally stabilized, coverage under this permit is automatically terminated.

iii. Compliance with Qualifying Local Program: Qualifying Local Program requirements that are equivalent to the requirements of this permit are incorporated by reference. Permittees authorized to discharge under this permit, must comply with the equivalent requirements of the Qualifying Local Program that has jurisdiction over the site as a condition of this permit.

iv. Compliance with Remaining Permit Conditions. Requirements of this permit that are in addition to or more stringent than the requirements of the Qualifying Local Program apply in addition to the requirements of the Qualifying Local Program.

v. Written Authorization of Coverage: The division or local municipality may require any permittee within the jurisdiction of a Qualifying Local Program covered under this permit to apply for, and obtain written authorization of coverage under this permit. The permittee must be notified in writing that an application for written authorization of coverage is required.

i. Permittee Initiated Permit Actions

Permittee initiated permit actions, including but not limited to modifications, contact changes, transfers, reassignments, and terminations, shall be conducted following division guidance and using appropriate division-provided forms.

j. Sale of Residence to Homeowner

Residential construction sites only: The permittee may remove residential lots from permit coverage once the lot meets the following criteria:

i. the residential lot has been sold to the homeowner(s) for private residential use;

ii. a certificate of occupancy, or equivalent, is maintained on-site and is available during division inspections;

iii. the lot is less than one acre of disturbance;

iv. all construction activity conducted on the lot by the permittee is complete;

v. the permittee is not responsible for final stabilization of the lot; and

vi. the SWMP was modified to indicate the lot is no longer part of the construction activity.

If the residential lot meets the criteria listed above then activities occurring on the lot are no longer considered to be construction activities with a duty to apply and maintain permit coverage. Therefore, the permittee is not required to meet the final stabilization requirements and may terminate permit coverage for the lot.

k. Permit Expiration and Continuation of Permit Coverage

Authorization to discharge under this general permit shall expire at midnight on March 31, 2024. While Regulation 61.4 requires a permittee to submit an application for continuing permit coverage 180 days before the permit expires, the division is requiring that permittees desiring continued coverage under this general permit must reapply at least 90 days in advance of this permit expiration. The Division will determine if the permittee may continue to discharge stormwater under the terms of the general permit. An individual permit may be required for any facility not reauthorized to discharge under the reissued general permit.

If this permit is not reissued or replaced prior to the expiration date, it will be administratively continued and remain in force and effect. For permittees that have applied for continued permit coverage, discharges authorized under this permit prior to the expiration date will automatically remain covered by this permit until the earliest of:

i. An authorization to discharge under a reissued permit, or a replacement of this permit, following the timely and appropriate submittal of a complete application requesting authorization to discharge under the new permit and compliance with the requirements of the new permit; or

ii. The issuance and effect of a termination issued by the Division; or

iii. The issuance or denial of an individual permit for the facility's discharges; or

iv. A formal permit decision by the Division not to reissue this general permit, at which time the Division will identify a reasonable time period for covered dischargers to seek coverage under an alternative general permit or an individual permit. Coverage under this permit will cease when coverage under another permit is granted/authorized; or

v. The Division has informed the permittee that discharges previously authorized under this permit are no longer covered under this permit.

B. EFFLUENT LIMITATIONS

1. Requirements for Control Measures Used to Meet Effluent Limitations

The permittee must implement control measures to minimize the discharge of pollutants from all potential pollutant sources at the site. Control measures must be installed prior to commencement of activities that may contribute pollutants to stormwater discharges. Control measures must be selected, designed, installed and maintained in accordance with good engineering, hydrologic and pollution control practices. Control measures implemented at the site must be designed to prevent pollution or degradation of state waters.

a. Stormwater Pollution Prevention

The permittee must implement structural and/or nonstructural control measures that effectively minimize erosion, sediment transport, and the release of other pollutants related to construction activity.

i. Control Measures for Erosion and Sediment Control

Control measures for erosion and sediment control may include, but are not limited to, wattles/sediment control logs, silt fences, earthen dikes, drainage swales, sediment traps, subsurface drains, pipe slope drains, inlet protection, outlet protection, gabions, sediment basins, temporary vegetation, permanent vegetation, mulching, geotextiles, sod stabilization, slope roughening, maintaining existing vegetation, protection of trees, and preservation of mature vegetation. Specific non-structural control measures must meet the requirements listed below.

Specific control measures must meet the requirements listed below.

(a) Vehicle tracking controls shall either be implemented to minimize vehicle tracking of sediment from disturbed areas, or the areas where vehicle tracking occurs shall meet subsection Part I.B.1.a.i(b);

(b) Stormwater runoff from all disturbed areas and soil storage areas for which permanent or temporary stabilization is not implemented, must flow to at least one control measure to minimize sediment in the discharge. This may be accomplished through filtering, settling, or straining. The control measure must be selected, designed, installed and adequately sized in accordance with good engineering, hydrologic and pollution control practices. The control measure(s) must contain or filter flows in order to prevent the bypass of flows without treatment and must be appropriate for stormwater runoff from disturbed areas and for the expected flow rate, duration, and flow conditions (i.e., sheet or concentrated flow);

(c) Outlets that withdraw water from or near the surface shall be installed when discharging from basins and impoundments, unless infeasible.

(d) Maintain pre-existing vegetation or equivalent control measures for areas within 50 horizontal feet of receiving waters as defined by this permit, unless infeasible.

(e) Soil compaction must be minimized for areas where infiltration control measures will occur or where final stabilization will be achieved through vegetative cover.

(f) Unless infeasible, topsoil shall be preserved for those areas of a site that will utilize vegetative final stabilization.

(g) Minimize the amount of soil exposed during construction activity, including the disturbance of steep slopes.

ii. Practices for Other Common Pollutants

(a) Bulk storage, 55 gallons or greater, for petroleum products and other liquid chemicals must have secondary containment, or equivalent protection, in order to contain spills and to prevent spilled material from entering state waters.

(b) Control measures designed for concrete washout waste must be implemented. This includes washout waste discharged to the ground as authorized under this permit and washout waste from concrete trucks and masonry operations contained on site. The permittee must ensure the washing activities do not contribute pollutants to stormwater runoff, or receiving waters in accordance Part I.A.1.b.ii. Discharges that may reach groundwater must flow through soil

that has buffering capacity prior to reaching groundwater, as necessary to meet the effluent limits in this permit, including Part I.B.3.a. The concrete washout location shall be not be located in an area where shallow groundwater may be present and would result in buffering capacity not being adequate, such as near natural drainages, springs, or wetlands. This permit authorizes discharges to the ground of concrete washout waste.

iii. Stabilization Requirements
The following requirements must be implemented for each site.

(a) Temporary stabilization must be implemented for earth disturbing activities on any portion of the site where ground disturbing construction activity has permanently ceased, or temporarily ceased for more than 14 calendar days. Temporary stabilization methods may include, but are not limited to, tarps, soil tackifier, and hydroseed. The permittee may exceed the 14-day schedule when either the function of the specific area of the site requires it to remain disturbed, or, physical characteristics of the terrain and climate prevent stabilization. The SWMP must document the constraints necessitating the alternative schedule, provide the alternate stabilization schedule, and identify all locations where the alternative schedule is applicable on the site map.

(b) Final stabilization must be implemented for all construction sites. Final stabilization is reached when all ground surface disturbing activities at the construction site are complete; and, for all areas of ground surface disturbing activities, either a uniform vegetative cover with an individual plant density of at least 70 percent of pre-disturbance levels is established, or equivalent permanent alternative stabilization methods are implemented. The division may approve alternative final stabilization criteria for specific operations.

(c) Final stabilization must be designed and installed as a permanent feature. Final stabilization measures for obtaining a vegetative cover or alternative stabilization methods include, but are not limited to, the following as appropriate:

(1) Seed mix selection and application methods;

(2) Soil preparation and amendments;

(3) Soil stabilization methods (e.g., crimped straw, hydro mulch or rolled erosion control products);

(4) Appropriate sediment control measures as needed until final stabilization is achieved;

(5) Permanent pavement, hardscape, xeriscape, stabilized driving surfaces;

(6) Other alternative stabilization practices as applicable;

(d) The permittee(s) must ensure all temporary control measures are removed from the construction site once final stabilization is achieved, except when the control measure specifications allow the control measure to be left in place (i.e., bio-degradable control measures).

b. Maintenance

The permittee must ensure that all control measures remain in effective operating condition and are protected from activities that would reduce their effectiveness. Control measures must be maintained in accordance with good engineering, hydrologic and pollution control practices. Observations leading to the required maintenance of control measures can be made during a site inspection, or during general observations of site conditions. The necessary repairs or modifications to a control measure requiring routine maintenance, as defined in Part I.E., must be conducted to maintain an effective operating condition. This section is not subject to the requirements in Part I.B.1.c. below.

c. Corrective Actions

The permittee must assess the adequacy of control measures at the site, and the need for changes to those control measures, to ensure continued effective performance. When an inadequate control measure, as defined in Part I.E., is identified (i.e., new or replacement control measures become necessary), the following corrective action requirements apply. The permittee is in noncompliance with the permit until the inadequate control measure is replaced or corrected and returned to effective operating condition in compliance with Part I.B.1. and the general requirements in Part I.B.3. If the inadequate control measure results in noncompliance that meets the conditions of Part II.L., the permittee must also meet the requirements of that section.

i. The permittee must take all necessary steps to minimize or prevent the discharge of pollutants, until a control measure is implemented and made operational and/or an inadequate control measure is replaced or corrected and returned to effective operating condition. If it is infeasible to install or repair of control measure immediately after discovering the deficiency, the following must be documented and kept on record in accordance with the recordkeeping requirements in Part II.

(a) Describe why it is infeasible to initiate the installation or repair immediately; and

(b) Provide a schedule for installing or repairing the control measure and returning it to an effective operating condition as soon as possible.

ii. If applicable, the permittee must remove and properly dispose of any unauthorized release or discharge (e.g., discharge of non-stormwater, spill, or leak not authorized by this permit.) The permittee must also clean up any contaminated surfaces to minimize discharges of the material in subsequent storm events.

2. Discharges to an Impaired Waterbody

a. Total Maximum Daily Load (TMDL)

If the permittee's discharge flows to or could reasonably be expected to flow to any water body for which a TMDL has been approved, and stormwater discharges

associated with construction activity were assigned a pollutant-specific Wasteload Allocation (WLA) under the TMDL, the division may:

i. ensure the WLA is implemented properly through alternative local requirements, such as by a municipal stormwater permit; or

ii. notify the permittee of the WLA and amend the permittee's certification to add specific effluent limits and other requirements, as appropriate. The permittee may be required to do the following:

(a) under the permittee's SWMP, implement specific control measures based on requirements of the WLA, and evaluate whether the requirements are met through implementation of existing stormwater control measures or if additional control measures are necessary. Document the calculations or other evidence demonstrating that the requirements are expected to be met; and

(b) if the evaluation shows that additional or modified control measures are necessary, describe the type and schedule for the control measure additions or modifications.

iii. Discharge monitoring may also be required. The permittee may maintain coverage under the general permit provided they comply with the applicable requirements outlined above. The division reserves the right to require individual or alternate general permit coverage.

3. General Requirements

a. Discharges authorized by this permit shall not cause, have the reasonable potential to cause, or measurably contribute to an exceedance of any applicable water quality standard, including narrative standards for water quality.

b. The division may require sampling and testing, on a case-by-case basis, in the event that there is reason to suspect that the SWMP is not adequately minimizing pollutants in stormwater or in order to measure the effectiveness of the control measures in removing pollutants in the effluent. Such monitoring may include Whole Effluent Toxicity testing.

c. The permittee must comply with the lawful requirements of federal agencies, municipalities, counties, drainage districts and other local agencies including applicable requirements in Municipal Stormwater Management Programs developed to comply with CDPS permits. The permittee must comply with local stormwater management requirements, policies and guidelines including those for erosion and sediment control.

d. All construction site wastes must be properly managed to prevent potential pollution of state waters. This permit does not authorize on-site waste disposal.

e. This permit does not relieve the permittee of the reporting requirements in 40 CFR 110, 40 CFR 117 or 40 CFR 302. Any discharge of hazardous material must be handled in accordance with the division's Noncompliance Notification Requirements (see Part II.L. of the permit).

C. STORMWATER MANAGEMENT PLAN (SWMP) REQUIREMENTS

1. SWMP General Requirements

   a. A SWMP shall be developed for each construction site covered by this permit. The SWMP must be prepared in accordance with good engineering, hydrologic and pollution control practices.

      i. For public emergency related sites a SWMP shall be created no later than 14 days after the commencement of construction activities.

   b. The permittee must implement the provisions of the SWMP as written and updated, from commencement of construction activity until final stabilization is complete. The division may review the SWMP.

   c. A copy of the SWMP must be retained onsite or be onsite when construction activities are occurring at the site unless the permittee specifies another location and obtains approval from the division.

2. SWMP Content

   a. The SWMP, at a minimum, must include the following elements.

      i. Qualified Stormwater Manager. The SWMP must list individual(s) by title and name who are designated as the site's qualified stormwater manager(s) responsible for implementing the SWMP in its entirety. This role may be filled by more than one individual.

      ii. Spill Prevention and Response Plan. The SWMP must have a spill prevention and response plan. The plan may incorporate by reference any part of a Spill Prevention Control and Countermeasure (SPCC) plan under section 311 of the Clean Water Act (CWA) or a Spill Prevention Plan required by a separate CDPS permit. The relevant sections of any referenced plans must be available as part of the SWMP consistent with Part I.C.4.

      iii. Materials Handling. The SWMP must describe and locate all control measures implemented at the site to minimize impacts from handling significant materials that could contribute pollutants to runoff. These handling procedures can include control measures for pollutants and activities such as, exposed storage of building materials, paints and solvents, landscape materials, fertilizers or chemicals, sanitary waste material, trash and equipment maintenance or fueling procedures.

      iv. Potential Sources of Pollution. The SWMP must list all potential sources of pollution which may reasonably be expected to affect the quality of stormwater discharges associated with construction activity from the site. This shall include, but is not limited to, the following pollutant sources:

         (a) disturbed and stored soils;

         (b) vehicle tracking of sediments;

         (c) management of contaminated soils;

         (d) loading and unloading operations;

(e) outdoor storage activities (erodible building materials, fertilizers, chemicals, etc.);

(f) vehicle and equipment maintenance and fueling;

(g) significant dust or particulate generating processes (e.g., saw cutting material, including dust);

(h) routine maintenance activities involving fertilizers, pesticides, herbicides, detergents, fuels, solvents, oils, etc.;

(i) on-site waste management practices (waste piles, liquid wastes, dumpsters);

(j) concrete truck/equipment washing, including washing of the concrete truck chute and associated fixtures and equipment;

(k) dedicated asphalt, concrete batch plants and masonry mixing stations;

(l) non-industrial waste sources such as worker trash and portable toilets.

v. Implementation of Control Measures. The SWMP must include design specifications that contain information on the implementation of the control measure in accordance with good engineering hydrologic and pollution control practices; including as applicable drawings, dimensions, installation information, materials, implementation processes, control measure-specific inspection expectations, and maintenance requirements.

The SWMP must include a documented use agreement between the permittee and the owner or operator of any control measures located outside of the permitted area, that are utilized by the permittee's construction site for compliance with this permit, but not under the direct control of the permittee. The permittee is responsible for ensuring that all control measures located outside of their permitted area, that are being utilized by the permittee's construction site, are properly maintained and in compliance with all terms and conditions of the permit. The SWMP must include all information required of and relevant to any such control measures located outside the permitted area, including location, installation specifications, design specifications and maintenance requirements.

vi. Site Description. The SWMP must include a site description which includes, at a minimum, the following:

(a) the nature of the construction activity at the site;

(b) the proposed schedule for the sequence for major construction activities and the planned implementation of control measures for each phase. (e.g.: clearing, grading, utilities, vertical, etc.);

(c) estimates of the total acreage of the site, and the acreage expected to be disturbed by clearing, excavation, grading, or any other construction activities;

(d) a summary of any existing data used in the development of the construction site plans or SWMP that describe the soil or existing potential for soil erosion;

(e) a description of the percent of existing vegetative ground cover relative to the entire site and the method for determining the percentage;

(f) a description of any allowable non-stormwater discharges at the site, including those being discharged under a division low risk discharge guidance policy;

(g) a description of areas receiving discharge from the site. Including a description of the immediate source receiving the discharge. If the stormwater discharge is to a municipal separate storm sewer system, the name of the entity owning that system, the location of the storm sewer discharge, and the ultimate receiving water(s); and

(h) a description of all stream crossings located within the construction site boundary.

vii. Site Map. The SWMP must include a site map which includes, at a minimum, the following:

(a) construction site boundaries;

(b) flow arrows that depict stormwater flow directions on-site and runoff direction;

(c) all areas of ground disturbance including areas of borrow and fill;

(d) areas used for storage of soil;

(e) locations of all waste accumulation areas, including areas for liquid, concrete, masonry, and asphalt;

(f) locations of dedicated asphalt, concrete batch plants and masonry mixing stations;

(g) locations of all structural control measures;

(h) locations of all non-structural control measures;

(i) locations of springs, streams, wetlands and other state waters, including areas that require pre-existing vegetation be maintained within 50 feet of a receiving water, where determined feasible in accordance with Part I.B.1.a.i.(d).; and

(j) locations of all stream crossings located within the construction site boundary.

viii. Final Stabilization and Long Term Stormwater Management. The SWMP must describe the practices used to achieve final stabilization of all disturbed areas at the site and any planned practices to control pollutants in stormwater discharges that will occur after construction operations are completed. Including but not limited to, detention/retention ponds, rain gardens, stormwater vaults, etc.

ix. Inspection Reports. The SWMP must include documented inspection reports in accordance with Part ID.

3. SWMP Review and Revisions

Permittees must keep a record of SWMP changes made that includes the date and identification of the changes. The SWMP must be amended when the following occurs:

a. a change in design, construction, operation, or maintenance of the site requiring implementation of new or revised control measures;

b. the SWMP proves ineffective in controlling pollutants in stormwater runoff in compliance with the permit conditions;

c. control measures identified in the SWMP are no longer necessary and are removed; and

d. corrective actions are taken onsite that result in a change to the SWMP.

For SWMP revisions made prior to or following a change(s) onsite, including revisions to sections addressing site conditions and control measures, a notation must be included in the SWMP that identifies the date of the site change, the control measure removed, or modified, the location(s) of those control measures, and any changes to the control measure(s). The permittee must ensure the site changes are reflected in the SWMP. The permittee is noncompliant with the permit until the SWMP revisions have been made.

4. SWMP Availability

A copy of the SWMP must be provided upon request to the division, EPA, and any local agency with authority for approving sediment and erosion plans, grading plans or stormwater management plans within the time frame specified in the request. If the SWMP is required to be submitted to any of these entities, the submission must include a signed certification in accordance with Part I.A.3.e., certifying that the SWMP is complete and compliant with all terms and conditions of the permit.

All SWMPs required under this permit are considered reports that must be available to the public under Section 308(b) of the CWA and Section 61.5(4) of the CDPS regulations. The permittee must make plans available to members of the public upon request. However, the permittee may claim any portion of a SWMP as confidential in accordance with 40 CFR Part 2.

D. SITE INSPECTIONS

Site inspections must be conducted in accordance with the following requirements. The required inspection schedules are a minimum frequency and do not affect the permittee's responsibility to implement control measures in effective operating condition as prescribed in the SWMP. Proper maintenance of control measures may require more frequent inspections. Site inspections shall start within 7 calendar days of the commencement of construction activities on site.

1. Person Responsible for Conducting Inspections

The person(s) inspecting the site may be on the permittee's staff or a third party hired to conduct stormwater inspections under the direction of the permittee(s). The permittee is responsible for ensuring that the inspector is a qualified stormwater manager.

2. Inspection Frequency

Permittees must conduct site inspections in accordance with one of the following minimum frequencies, unless the site meets the requirements of Part ID.3

a. At least one inspection every 7 calendar days. Or

b. At least one inspection every 14 calendar days, if post-storm event inspections are conducted within 24 hours after the end of any precipitation or snowmelt event that causes surface erosion. Post-storm inspections may be used to fulfill the 14-day routine inspection requirement.

c. When site conditions make the schedule required in this section impractical, the permittee may petition the Division to grant an alternate inspection schedule. The alternative inspection schedule may not be implemented prior to written approval by the division and incorporation into the SWMP.

3. Inspection Frequency for Discharges to Outstanding Waters

Permittees must conduct site inspections at least once every 7 calendar days for sites that discharge to a water body designated as an Outstanding Water by the Water Quality Control Commission.

4. Reduced Inspection Frequency

The permittee may perform site inspections at the following reduced frequencies when one of the following conditions exists:

a. Post-Storm Inspections at Temporarily Idle Sites
For permittees choosing to combine 14-day inspections and post-storm-event-inspections, if no construction activities will occur following a storm event, post-storm event inspections must be conducted prior to re-commencing construction activities, but no later than 72 hours following the storm event. The delay of any post-storm event inspection must be documented in the inspection record. Routine inspections must still be conducted at least every 14 calendar days.

b. Inspections at Completed Sites/Areas
When the site, or portions of a site are awaiting establishment of a vegetative ground cover and final stabilization, the permittee must conduct a thorough inspection of the stormwater management system at least once every 30 days. Post-storm event inspections are not required under this schedule. This reduced inspection schedule is allowed if all of the following criteria are met:

i. all construction activities resulting in ground disturbance are complete;

ii. all activities required for final stabilization, in accordance with the SWMP, have been completed, with the exception of the application of seed that has not occurred due to seasonal conditions or the necessity for additional seed application to augment previous efforts; and

iii. the SWMP has been amended to locate those areas to be inspected in accordance with the reduced schedule allowed for in this paragraph.

c. Winter Conditions Inspections Exclusion

Inspections are not required for sites that meet all of the following conditions: construction activities are temporarily halted, snow cover exists over the entire site for an extended period, and melting conditions posing a risk of surface erosion do not exist. This inspection exception is applicable only during the period where melting conditions do not exist, and applies to the routine 7-day, 14-day and monthly inspections, as well as the post-storm-event inspections. When this inspection exclusion is implemented, the following information must be documented in accordance with the requirements in Part II:

i. dates when snow cover existed;

ii. date when construction activities ceased; and

iii. date melting conditions began.

5. Inspection Scope

a. Areas to be Inspected
When conducting a site inspection the following areas, if applicable, must be inspected for evidence of, or the potential for, pollutants leaving the construction site boundaries, entering the stormwater drainage system, or discharging to state waters:

i. construction site perimeter;

ii. all disturbed areas;

iii. designated haul routes;

iv. material and waste storage areas exposed to precipitation;

v. locations where stormwater has the potential to discharge offsite; and

vi. locations where vehicles exit the site.

b. Inspection Requirements

i. Visually verify whether all implemented control measures are in effective operational condition and are working as designed in their specifications to minimize pollutant discharges.

ii. Determine if there are new potential sources of pollutants.

iii. Assess the adequacy of control measures at the site to identify areas requiring new or modified control measures to minimize pollutant discharges.

iv. Identify all areas of non–compliance with the permit requirements and, if necessary, implement corrective action in accordance with Part IB.1.c.

c. Inspection Reports
The permittee must keep a record of all inspections conducted for each permitted site. Inspection reports must identify any incidents of noncompliance with the terms and conditions of this permit. Inspection records must be retained in accordance with Part II.O. and signed in accordance with Part I.A.3.f. At a minimum, the inspection report must include:

i. the inspection date;

ii. name(s) and title(s) of personnel conducting the inspection;

iii. weather conditions at the time of inspection;

iv. phase of construction at the time of inspection;

v. estimated acreage of disturbance at the time of inspection

vi. location(s) of discharges of sediment or other pollutants from the site;

vii. location(s) of control measures needing maintenance;

viii. location(s) and identification of inadequate control measures;

ix. location(s) and identification of additional control measures are needed that were not in place at the time of inspection;

x. description of the minimum inspection frequency (either in accordance with Part I.D.2., I.D.3. or I.D.4.) utilized when conducting each inspection.

xi. deviations from the minimum inspection schedule as required in Part I.D.2.;

xii. after adequate corrective action(s) and maintenance have been taken, or where a report does not identify any incidents requiring corrective action or maintenance, the report shall contain a statement as required in Part I.A.3.f.

E. DEFINITIONS

For the purposes of this permit:

(1) Bypass - the intentional diversion of waste streams from any portion of a treatment facility in accordance with 40 CFR 122.41(m)(1)(i) and Regulation 61.2(12).

(2) Common Plan of Development or Sale - A contiguous area where multiple separate and distinct construction activities may be taking place at different times on different schedules, but remain related. The Division has determined that "contiguous" means construction activities located in close proximity to each other (within ¼ mile). Construction activities are considered to be "related" if they share the same development plan, builder or contractor, equipment, storage areas, etc. "Common plan of development or sale" includes construction activities that are associated with the construction of field wide oil and gas permits for facilities that are related.

(3) Construction Activity - Ground surface disturbing and associated activities (land disturbance), which include, but are not limited to, clearing, grading, excavation, demolition, installation of new or improved haul roads and access roads, staging areas, stockpiling of fill materials, and borrow areas. Construction does not include routine maintenance to maintain the original line and grade, hydraulic capacity, or original purpose of the facility. Activities to conduct repairs that are not part of routine maintenance or for replacement are construction activities and are not routine maintenance. Repaving activities where underlying and/or surrounding soil is exposed as part of the repaving operation are considered construction activities. Construction activity is from initial ground breaking to final stabilization regardless of ownership of the construction activities.

(4) Control Measure - Any best management practice or other method used to prevent or reduce the discharge of pollutants to state waters. Control measures include, but are not limited to, best management practices. Control measures can include other methods such as the installation, operation, and maintenance of structural controls and treatment devices.

(5) Control Measure Requiring Routine Maintenance - Any control measure that is still operating in accordance with its design and the requirements of this permit, but requires maintenance to prevent a breach of the control measure. See also inadequate control measure.

(6) Dedicated Asphalt, Concrete Batch Plants and Masonry Mixing Stations – are batch plants or mixing stations located on, or within ¼ mile of, a construction site and that provide materials only to that specific construction site.

(7) Final Stabilization - The condition reached when all ground surface disturbing activities at the site have been completed, and for all areas of ground surface disturbing activities where a uniform vegetative cover has been established with an individual plant density of at least 70 percent of pre-disturbance levels, or equivalent permanent, physical erosion reduction methods have been employed.

(8) Good Engineering, Hydrologic and Pollution Control Practices: are methods, procedures, and practices that:
   a. Are based on basic scientific fact(s).
   b. Reflect best industry practices and standards.
   c. Are appropriate for the conditions and pollutant sources.
   d. Provide appropriate solutions to meet the associated permit requirements, including practice based effluent limits.

(9) Inadequate Control Measure - Any control measure that is not designed or implemented in accordance with the requirements of the permit and/or any control measure that is not implemented to operate in accordance with its design. See also Control Measure Requiring Routine Maintenance.

(10) Infeasible – Not technologically possible, or not economically practicable and achievable in light of best industry practices.

(11) Minimize - reduce or eliminate to the extent achievable using control measures that are technologically available and economically practicable and achievable in light of best industry practice.

(12) Municipality - A city, town, county, district, association, or other public body created by, or under, State law and having jurisdiction over disposal of sewage, industrial wastes, or other wastes, or a designated and approved management agency under section 208 of CWA (1987).

(13) Municipal Separate Storm Sewer System (MS4) - A conveyance or system of conveyances (including roads with drainage systems, municipal streets, catch basins, curbs, gutters, ditches, man-made channels, or storm drains):

   a) owned or operated by a State, city, town, county, district, association, or other public body (created by or pursuant to State law) having jurisdiction over disposal of sewage, industrial wastes, stormwater, or other wastes, including special districts under State law such as a sewer district, flood control district or drainage district, or similar entity, or a designated and approved management agency under section 208 of the CWA that discharges to state waters;

      i. designed or used for collecting or conveying stormwater;
      ii. are not a combined sewer; and
      iii. are not part of a Publicly Owned Treatment Works (POTW). See 5 CCR 1002-61.2(62).

(14) Municipal Stormwater Management Program - A stormwater program operated by a municipality, typically to meet the requirements of the municipalities MS4 discharge certification.

(15) Operator - The party that has operational control over day-to-day activities at a project site which are necessary to ensure compliance with the permit. This party is authorized to direct individuals at a site to carry out activities required by the permit.(e.g. the general contractor)

(16) Owner - The party that has overall control of the activities and that has funded the implementation of the construction plans and specifications. This is the party with ownership of, a long term lease of, or easements on the property on which the construction activity is occurring (e.g., the developer).

(17) Permittee(s) - The owner and operator named in the discharge certification issued under this permit for the construction site specified in the certification.

(18) Point Source - Any discernible, confined, and discrete conveyance, including, but not limited to, any pipe, ditch, channel, tunnel, conduit, well, discrete fissure, container, rolling stock, concentrated animal feeding operation, or vessel or other floating craft, from which pollutants are or may be discharged. Point source does not include irrigation return flow. See 5 CCR 102-61.2(75).

(19) Pollutant - Dredged spoil, dirt, slurry, solid waste, incinerator residue, sewage, sewage sludge, garbage, trash, chemical waste, biological nutrient, biological material, radioactive material, heat, wrecked or discarded equipment, rock, sand, or any industrial, municipal or agricultural waste. See 5 CCR 1002-61.2(76).

(20) Presentation of credentials – a government issued form of identification, if in person; or (ii) providing name, position and purpose of inspection if request to enter is made via telephone, email or other form of electronic communication. A Permittee's non-response to a request to enter upon presentation of credentials constitutes a denial to such request, and may result in violation of the Permit.

(21) Process Water - Any water which, during manufacturing or processing, comes into contact with or results from the production of any raw material, intermediate product, finished product, by product or waste product.

(22) Public Emergency Related Site - a project initiated in response to an unanticipated emergency (e.g., mud slides, earthquake, extreme flooding conditions, disruption in essential public services), for which the related work requires immediate authorization to avoid imminent endangerment to human health or the environment, or to reestablish essential public services.

(23) Qualified Stormwater Manager - An individual knowledgeable in the principles and practices of erosion and sediment control and pollution prevention, and with the skills to assess conditions at construction sites that could impact stormwater quality and to assess the effectiveness of stormwater controls implemented to meet the requirements of this permit.

(24) Qualifying Local Program - A municipal program for stormwater discharges associated with small construction activity that was formally approved by the division as a qualifying local program.

(25) Receiving Water - Any classified or unclassified surface water segment (including tributaries) in the State of Colorado into which stormwater associated with construction activities discharges. This definition includes all water courses, even if they are usually dry, such as borrow ditches, arroyos, and other unnamed waterways.

(26) Severe Property Damage - substantial physical damage to property, damage to the treatment facilities which causes them to become inoperable, or substantial and permanent loss of natural resources which can reasonably be expected to occur in the absence of a bypass. Severe property damage does not mean economic loss caused by delays in production. See 40 CFR 122.41(m)(1)(ii).

(27) Significant Materials - Include, but not limited to, raw materials; fuels; materials such as solvents, detergents, and plastic pellets; finished materials such as metallic products; raw materials used in food processing or production; hazardous substances designated under section 101(14) of CERCLA; any chemical the permittee is required to report under section 313 of Title III of the Superfund Amendments and Reauthorization Act (SARA); fertilizers; pesticides; and waste products such as ashes, slag and sludge that have the potential to be released with stormwater discharges.

(28) Small Construction Activity - The discharge of stormwater from construction activities that result in land disturbance of equal to, or greater than, one acre and less than five acres. Small construction activity also includes the disturbance of less than one acre of total land area that is part of a larger common plan of development or sale, if the larger common plan ultimately disturbs equal to, or greater than, one acre and less than five acres.

(29) Spill - An unintentional release of solid or liquid material which may pollute state waters.

(30) State Waters - means any and all surface and subsurface waters which are contained in or flow in or through this state, but does not include waters in sewage systems, waters in treatment works of disposal systems, waters in potable water distribution systems, and all water withdrawn for use until use and treatment have been completed.

(31) Steep Slopes: where a local government, or industry technical manual (e.g., stormwater BMP manual) has defined what is to be considered a “steep slope”, this permit’s definition automatically adopts that definition. Where no such definition exists, steep slopes are automatically defined as those that are 3:1 or greater.

(32) Stormwater - Precipitation runoff, snow melt runoff, and surface runoff and drainage. See 5 CCR 1002-61.2(103).

(33) Total Maximum Daily Loads (TMDLs) -The sum of the individual wasteload allocations (WLA) for point sources and load allocations (LA) for nonpoint sources and natural background. For the purposes of this permit, a TMDL is a calculation of the maximum amount of a pollutant that a waterbody can receive and still meet water quality standards, and an allocation of that amount to the pollutant's sources. A TMDL includes WLAs, LAs, and must include a margin of safety (MOS), and account for seasonal variations. See section 303(d) of the CWA and 40 C.F.R. 130.2 and 130.7.

(34) Upset - an exceptional incident in which there is unintentional and temporary noncompliance with permit effluent limitations because of factors beyond the reasonable control of the permittee. An upset does not include noncompliance to the extent caused by operational error, improperly designed treatment facilities, inadequate treatment facilities, lack of preventative maintenance, or careless or improper operation in accordance with 40 CFR 122.41(n) and Regulation 61.2(114).

F. MONITORING

The division may require sampling and testing, on a case-by-case basis. If the division requires sampling and testing, the division will send a notification to the permittee. Reporting procedures for any monitoring data collected will be included in the notification.

If monitoring is required, the following applies:

1. the thirty (30) day average must be determined by the arithmetic mean of all samples collected during a thirty (30) consecutive-day period; and

2. a grab sample, for monitoring requirements, is a single “dip and take” sample.

G. Oil and Gas Construction

Stormwater discharges associated with construction activities directly related to oil and gas exploration, production, processing, and treatment operations or transmission facilities are regulated under the Colorado Discharge Permit System Regulations (5 CCR 1002-61), and require coverage under this permit in accordance with that regulation. However, references in this permit to specific authority under the CWA do not apply to stormwater discharges associated with these oil and gas related construction activities, to the extent that the references are limited by the federal Energy Policy Act of 2005.

Part II: Standard Permit Conditions

A. DUTY TO COMPLY

The permittee must comply with all conditions of this permit. Any permit noncompliance constitutes a violation of the Water Quality Control Act and is grounds for:

a. enforcement action;

b. permit termination, revocation and reissuance, or modification; or

c. denial of a permit renewal application.

B. DUTY TO REAPPLY

If the permittee wishes to continue an activity regulated by this permit after the expiration date of this permit, the permittee must apply for and obtain authorization as required by Part I.A.3.k. of the permit.

C. NEED TO HALT OR REDUCE ACTIVITY NOT A DEFENSE

It shall not be a defense for a permittee in an enforcement action that it would have been necessary to halt or reduce the permitted activity in order to maintain compliance with the conditions of this permit.

D. DUTY TO MITIGATE

A permittee must take all reasonable steps to minimize or prevent any discharge in violation of this permit which has a reasonable likelihood of adversely affecting human health or the environment.

E. PROPER OPERATION AND MAINTENANCE

A permittee must at all times properly operate and maintain all facilities and systems of treatment and control (and related appurtenances) that are installed or used by the permittee to achieve compliance with the conditions of this permit. Proper operation and maintenance also includes adequate laboratory controls and appropriate quality assurance procedures. This provision requires the operation of backup or auxiliary facilities or similar systems which are installed by the permittee only when the operation is necessary to achieve compliance with the conditions of this permit. This requirement can be met by meeting the requirements for Part I.B., I.C., and I.D. above. See also 40 C.F.R. § 122.41(e).

F. PERMIT ACTIONS

This permit may be modified, revoked and reissued, or terminated for cause. The permittee request for a permit modification, revocation and reissuance, or termination, or a notification of planned changes or anticipated noncompliance does not stay any permit condition. Any request for modification, revocation, reissuance, or termination under this permit must comply with all terms and conditions of Regulation 61.8(8).

G. PROPERTY RIGHTS

In accordance with 40 CFR 122.41(g) and 5 CCR 1002-61, 61.8(9):

1. The issuance of a permit does not convey any property or water rights in either real or personal property, or stream flows or any exclusive privilege.

2. The issuance of a permit does not authorize any injury to person or property or any invasion of personal rights, nor does it authorize the infringement of federal, state, or local laws or regulations.
3. Except for any toxic effluent standard or prohibition imposed under Section 307 of the Federal act or any standard for sewage sludge use or disposal under Section 405(d) of the Federal act, compliance with a permit during its term constitutes compliance, for purposes of enforcement, with Sections 301, 302, 306, 318, 403, and 405(a) and (b) of the Federal act. However, a permit may be modified, revoked and reissued, or terminated during its term for cause as set forth in Section 61.8(8) of the Colorado Discharge Permit System Regulations.

H. DUTY TO PROVIDE INFORMATION

The permittee shall furnish to the division, within a reasonable time, any information which the division may request to determine whether cause exists for modifying, revoking and reissuing, or terminating this permit, or to determine compliance with this permit. The permittee shall also furnish to the division, upon request, copies of records required to be kept by this permit in accordance with 40 CFR 122.41(h) and/or Regulation 61.8(3)(q).

I. INSPECTION AND ENTRY

The permittee shall allow the division and the authorized representative, upon the presentation of credentials as required by law, to allow for inspections to be conducted in accordance with 40 CFR 122.41(i), Regulation 61.8(3), and Regulation 61.8(4):

1. to enter upon the permittee's premises where a regulated facility or activity is located or in which any records are required to be kept under the terms and conditions of this permit;
2. at reasonable times to have access to and copy any records required to be kept under the terms and conditions of this permit;
3. at reasonable times, inspect any monitoring equipment or monitoring method required in the permit; and
4. to enter upon the permittee's premises in a reasonable manner and at a reasonable time to inspect or investigate, any actual, suspected, or potential source of water pollution, or any violation of the Colorado Water Quality Control Act. The investigation may include: sampling of any discharges, stormwater or process water, taking of photographs, interviewing site staff on alleged violations and other matters related to the permit, and assessing any and all facilities or areas within the site that may affect discharges, the permit, or an alleged violation.

The permittee shall provide access to the division or other authorized representatives upon presentation of proper credentials. A permittee's non-response to a request to enter upon presentation of credentials constitutes a denial of such request, and may result in a violation of the permit.

J. MONITORING AND RECORDS

1. Samples and measurements taken for the purpose of monitoring must be representative of the volume and nature of the monitored activity.

2. The permittee must retain records of all monitoring information, including all calibration and maintenance records and all original strip chart recordings for continuous monitoring instrumentation, copies of all reports required by this permit, and records of all data used to complete the application for this permit, for a period of at least three years from the date the permit expires or the date the permittee's authorization is terminated. This period may be extended by request of the division at any time.

3. Records of monitoring information must include:
   a. The date, exact place, and time of sampling or measurements;
   b. The individual(s) who performed the sampling or measurements;
   c. The date(s) analyses were performed
   d. The individual(s) who performed the analyses;
   e. The analytical techniques or methods used; and
   f. The results of such analyses.

4. Monitoring must be conducted according to test procedures approved under 40 CFR Part 136, unless other test procedures have been specified in the permit.

K. SIGNATORY REQUIREMENTS

1. Authorization to Sign:

   All documents required to be submitted to the division by the permit must be signed in accordance with the following criteria:

   a. For a corporation: By a responsible corporate officer. For the purpose of this subsection, a responsible corporate officer means:

      i. a president, secretary, treasurer, or vice president of the corporation in charge of a principal business function, or any other person who performs similar policy- or decision-making functions for the corporation, or

      ii. the manager of one or more manufacturing, production, or operating facilities, provided, the manager is authorized to make management decisions which govern the operation of the regulated facility including having the explicit or implicit duty of making major capital investment recommendations, and initiating and directing other comprehensive measures to assure long term environmental compliance with environmental laws and regulations; the manager can ensure that the necessary systems are established or actions taken to gather complete and accurate information for permit application requirements; and where authority to sign documents has been assigned or delegated to the manager in accordance with corporate procedures.

   b. For a partnership or sole proprietorship: By a general partner or the proprietor, respectively; or

   c. For a municipality, state, federal, or other public agency: By either a principal executive officer or ranking elected official. For purposes of this subsection, a principal executive officer of a federal agency includes

      i. (i) the chief executive officer of the agency, or

ii. (ii) a senior executive officer having responsibility for the overall operations of a principal geographic unit of the agency. (e.g., Regional Administrator of EPA)

2. Electronic Signatures

For persons signing applications for coverage under this permit electronically, in addition to meeting other applicable requirements stated above, such signatures must meet the same signature, authentication, and identity-proofing standards set forth at 40 CFR § 3.2000(b) for electronic reports (including robust second-factor authentication). Compliance with this requirement can be achieved by submitting the application using the Colorado Environmental Online Service (CEOS) system.

3. Change in Authorization to Sign

If an authorization is no longer accurate because a different individual or position has responsibility for the overall operation of the facility, a new authorization must be submitted to the division, prior to the re-authorization, or together with any reports, information, or applications to be signed by an authorized representative.

L. REPORTING REQUIREMENTS

1. Planned Changes

The permittee shall give advance notice to the division, in writing, of any planned physical alterations or additions to the permitted facility in accordance with 40 CFR 122.41(l) and Regulation 61.8(5)(a). Notice is required only when:

a. The alteration or addition to a permitted facility may meet one of the criteria for determining whether a facility is a new source in 40 CFR 122.29(b); or

b. The alteration or addition could significantly change the nature or increase the quantity of pollutants discharged. This notification applies to pollutants which are subject neither to effluent limitations in the permit, nor to notification requirements under 40 CFR 122.41(a)(1).

2. Anticipated Non-Compliance

The permittee shall give advance notice to the division, in writing, of any planned changes in the permitted facility or activity that may result in noncompliance with permit requirements. The timing of notification requirements differs based on the type of non-compliance as described in subparagraphs 5, 6, 7, and 8 below.

3. Transfer of Ownership or Control

The permittee shall notify the division, in writing, ten (10) calendar days in advance of a proposed transfer of the permit. This permit is not transferable to any person except after notice is given to the division.

a. Where a facility wants to change the name of the permittee, the original permittee (the first owner or operators) must submit a Notice of Termination.

b. The new owner or operator must submit an application. See also signature requirements in Part II.K, above.

c. A permit may be automatically transferred to a new permittee if:

   i. The current permittee notifies the Division in writing 30 calendar days in advance of the proposed transfer date; and

   ii. The notice includes a written agreement between the existing and new permittee(s) containing a specific date for transfer of permit responsibility, coverage and liability between them; and

   iii. The division does not notify the existing permittee and the proposed new permittee of its intent to modify, or revoke and reissue the permit.

   iv. Fee requirements of the Colorado Discharge Permit System Regulations, Section 61.15, have been met.

4. Monitoring reports

   Monitoring results must be reported at the intervals specified in this permit per the requirements of 40 CFR 122.41(l)(4).

5. Compliance Schedules

   Reports of compliance or noncompliance with, or any progress reports on, interim and final requirements contained in any compliance schedule in the permit, shall be submitted on the date listed in the compliance schedule section. The fourteen (14) calendar day provision in Regulation 61.8(4)(n)(i) has been incorporated into the due date.

6. Twenty-four hour reporting

   In addition to the reports required elsewhere in this permit, the permittee shall report the following circumstances orally within twenty-four (24) hours from the time the permittee becomes aware of the circumstances, and shall mail to the division a written report containing the information requested within five (5) working days after becoming aware of the following circumstances:

   a. Circumstances leading to any noncompliance which may endanger health or the environment regardless of the cause of the incident;

   b. Circumstances leading to any unanticipated bypass which exceeds any effluent limitations in the permit;

   c. Circumstances leading to any upset which causes an exceedance of any effluent limitation in the permit;

d. Daily maximum violations for any of the pollutants limited by Part I of this permit. This includes any toxic pollutant or hazardous substance or any pollutant specifically identified as the method to control any toxic pollutant or hazardous substance.

e. The division may waive the written report required under subparagraph 6 of this section if the oral report has been received within 24 hours.

7. Other non-compliance

A permittee must report all instances of noncompliance at the time monitoring reports are due. If no monitoring reports are required, these reports are due at least annually in accordance with Regulation 61.8(4)(p). The annual report must contain all instances of non-compliance required under either subparagraph 5 or subparagraph 6 of this subsection.

8. Other information

Where a permittee becomes aware that it failed to submit any relevant facts in a permit application, or submitted incorrect information in a permit application, or in any report to the Permitting Authority, it has a duty to promptly submit such facts or information.

M. BYPASS

1. Bypass not exceeding limitations

The permittees may allow any bypass to occur which does not cause effluent limitations to be exceeded, but only if it also is for essential maintenance to assure efficient operation. These bypasses are not subject to the provisions of Part II.M.2 of this permit. See 40 CFR 122.41(m)(2).

2. Notice of bypass

a. Anticipated bypass. If the permittee knows in advance of the need for a bypass, the permittee must submit prior notice, if possible at least ten days before the date of the bypass. ee 40 CFR §122.41(m)(3)(i) and/or Regulation 61.9(5)(c).

b. Unanticipated bypass. The permittee must submit notice of an unanticipated bypass in accordance with Part II.L.6. See 40 CFR §122.41(m)(3)(ii) .

3. Prohibition of Bypass

Bypasses are prohibited and the division may take enforcement action against the permittee for bypass, unless:

i. the bypass is unavoidable to prevent loss of life, personal injury, or severe property damage;

ii. There were no feasible alternatives to the bypass, such as the use of auxiliary treatment facilities, retention of untreated wastes, or maintenance during normal periods of equipment downtime. This condition is not satisfied if adequate backup equipment should have been installed in the exercise of reasonable engineering judgment to prevent a bypass which occurred during normal periods of equipment downtime or preventive maintenance; and

iii. proper notices were submitted to the division.

N. UPSET

1. Effect of an upset

An upset constitutes an affirmative defense to an action brought for noncompliance with permit effluent limitations if the requirements of Part II.N.2. of this permit are met. No determination made during administrative review of claims that noncompliance was caused by upset, and before an action for noncompliance, is final administrative action subject to judicial review in accordance with Regulation 61.8(3)(j).

2. Conditions necessary for demonstration of an Upset

A permittee who wishes to establish the affirmative defense of upset shall demonstrate through properly signed contemporaneous operating logs, or other relevant evidence that

a. an upset occurred and the permittee can identify the specific cause(s) of the upset;

b. the permitted facility was at the time being properly operated and maintained; and

c. the permittee submitted proper notice of the upset as required in Part II.L.6.(24-hour notice); and

d. the permittee complied with any remedial measure necessary to minimize or prevent any discharge or sludge use or disposal in violation of this permit which has a reasonable likelihood of adversely affecting human health or the environment. In addition to the demonstration required above, a permittee who wishes to establish the affirmative defense of upset for a violation of effluent limitations based upon water quality standards shall also demonstrate through monitoring, modeling or other methods that the relevant standards were achieved in the receiving water.

3. Burden of Proof

In any enforcement proceeding, the permittee seeking to establish the occurrence of an upset has the burden of proof.

O. RETENTION OF RECORDS

1. Post-Expiration or Termination Retention

Copies of documentation required by this permit, including records of all data used to complete the application for permit coverage to be covered by this permit, must be

retained for at least three years from the date that permit coverage expires or is terminated. This period may be extended by request of EPA at any time.

2. On-site Retention

   The permittee must retain an electronic version or hardcopy of the SWMP at the construction site from the date of the initiation of construction activities to the date of expiration or inactivation of permit coverage; unless another location, specified by the permittee, is approved by the division.

P. REOPENER CLAUSE

1. Procedures for modification or revocation

   Permit modification or revocation of this permit or coverage under this permit will be conducted according to Regulation 61.8(8).

2. Water quality protection

   If there is evidence indicating that the stormwater discharges authorized by this permit cause, have the reasonable potential to cause or contribute to an excursion above any applicable water quality standard, the permittee may be required to obtain an individual permit, or the permit may be modified to include different limitations and/or requirements.

Q. SEVERABILITY

The provisions of this permit are severable. If any provisions or the application of any provision of this permit to any circumstances, is held invalid, the application of such provision to other circumstances and the application of the remainder of this permit shall not be affected.

R. NOTIFICATION REQUIREMENTS

1. Notification to Parties

   All notification requirements, excluding information submitted using the CEOS portal, shall be directed as follows:

   a. Oral Notifications, during normal business hours shall be to:
      Clean Water Compliance Section
      Water Quality Control Division
      Telephone: (303) 692-3500

   b. Written notification shall be to:
      Clean Water Compliance Section
      Water Quality Control Division
      Colorado Department of Public Health and Environment
      WQCD-WQP-B2
      4300 Cherry Creek Drive South
      Denver, CO 80246-1530

S. RESPONSIBILITIES

1. Reduction, Loss, or Failure of Treatment Facility

   The permittee has the duty to halt or reduce any activity if necessary to maintain compliance with the effluent limitations of the permit. It shall not be a defense for a permittee in an enforcement action that it would be necessary to halt or reduce the permitted activity in order to maintain compliance with the conditions of this permit.

T. Oil and Hazardous Substance Liability

Nothing in this permit shall be construed to preclude the institution of any legal action or relieve the permittee from any responsibilities, liabilities, or penalties to which the permittee is or may be subject to under Section 311 (Oil and Hazardous Substance Liability) of the CWA.

U. Emergency Powers

Nothing in this permit shall be construed to prevent or limit application of any emergency power of the division.

V. Confidentiality

Any information relating to any secret process, method of manufacture or production, or sales or marketing data which has been declared confidential by the permittee, and which may be acquired, ascertained, or discovered, whether in any sampling investigation, emergency investigation, or otherwise, shall not be publicly disclosed by any member, officer, or employee of the Water Quality Control Commission or the division, but shall be kept confidential. Any person seeking to invoke the protection of of this section shall bear the burden of proving its applicability. This section shall never be interpreted as preventing full disclosure of effluent data.

W. Fees

The permittee is required to submit payment of an annual fee as set forth in the 2016 amendments to the Water Quality Control Act. Section 25-8-502 (1.1) (b), and the Colorado Discharge Permit System Regulations 5 CCR 1002-61, Section 61.15 as amended. Failure to submit the required fee when due and payable is a violation of the permit and will result in enforcement action pursuant to Section 25-8-601 et. seq., C.R.S.1973 as amended.

X. Duration of Permit

The duration of a permit shall be for a fixed term and shall not exceed five (5) years. If the permittee desires to continue to discharge, a permit renewal application shall be submitted at least ninety (90) calendar days before this permit expires. Filing of a timely and complete application shall cause the expired permit to continue in force to the effective date of the new permit. The permit's duration may be extended only through administrative extensions and not through interim modifications. If the permittee anticipates there will be no discharge after the expiration date of this permit, the division should be promptly notified so that it can terminate the permit in accordance with Part I.A.3.i.

Y. Section 307 Toxics

If a toxic effluent standard or prohibition, including any applicable schedule of compliance specified, is established by regulation pursuant to Section 307 of the Federal Act for a toxic pollutant which is present in the permittee's discharge and such standard or prohibition is more stringent than any limitation upon such pollutant in the discharge permit, the division

shall institute proceedings to modify or revoke and reissue the permit to conform to the toxic effluent standard or prohibition

APPENDIX B - EL PASO COUNTY AND CDPHE PERMIT DOCUMENTATION

APPENDIX C - EROSION AND SEDIMENT CONTROL PLANS

EL PASO COUNTY GRADING AND EROSION CONTROL PLAN:

1. STORMWATER DISCHARGES FROM CONSTRUCTION SITES SHALL NOT CAUSE OR THREATEN TO CAUSE POLLUTION, CONTAMINATION, OR DEGRADATION OF STATE WATERS. ALL WORK AND EARTH DISTURBANCE SHALL BE DONE IN A MANNER THAT MINIMIZES POLLUTION OF ANY ON-SITE OR OFF-SITE WATERS, INCLUDING WETLANDS.

2. NOTWITHSTANDING ANYTHING DEPICTED IN THESE PLANS IN WORDS OR GRAPHIC REPRESENTATION, ALL DESIGN AND CONSTRUCTION RELATED TO ROADS, STORM DRAINAGE AND EROSION CONTROL SHALL CONFORM TO THE STANDARDS AND REQUIREMENTS OF THE MOST RECENT VERSION OF THE RELEVANT ADOPTED EL PASO COUNTY STANDARDS, INCLUDING THE LAND DEVELOPMENT CODE, THE ENGINEERING CRITERIA MANUAL, THE DRAINAGE CRITERIA MANUAL, AND THE DRAINAGE CRITERIA MANUAL VOLUME 2. ANY DEVIATIONS FROM REGULATIONS AND STANDARDS MUST BE REQUESTED, AND APPROVED, IN WRITING.

3. A SEPARATE STORMWATER MANAGEMENT PLAN (SMWP) FOR THIS PROJECT SHALL BE COMPLETED AND AN EROSION AND STORMWATER QUALITY CONTROL PERMIT (ESQCP) ISSUED PRIOR TO COMMENCING CONSTRUCTION. MANAGEMENT OF THE SWMP DURING CONSTRUCTION IS THE RESPONSIBILITY OF THE DESIGNATED QUALIFIED STORMWATER MANAGER OR CERTIFIED EROSION CONTROL INSPECTOR. THE SWMP SHALL BE LOCATED ON SITE AT ALL TIMES DURING CONSTRUCTION AND SHALL BE KEPT UP TO DATE WITH WORK PROGRESS AND CHANGES IN THE FIELD.

4. ONCE THE ESQCP IS APPROVED AND A "NOTICE TO PROCEED" HAS BEEN ISSUED, THE CONTRACTOR MAY INSTALL THE INITIAL STAGE EROSION AND SEDIMENT CONTROL MEASURES AS INDICATED ON THE APPROVED GEC. A PRECONSTRUCTION MEETING BETWEEN THE CONTRACTOR, ENGINEER, AND EL PASO COUNTY WILL BE HELD PRIOR TO ANY CONSTRUCTION. IT IS THE RESPONSIBILITY OF THE APPLICANT TO COORDINATE THE MEETING TIME AND PLACE WITH COUNTY STAFF.

5. CONTROL MEASURES MUST BE INSTALLED PRIOR TO COMMENCEMENT OF ACTIVITIES THAT COULD CONTRIBUTE POLLUTANTS TO STORMWATER. CONTROL MEASURES FOR ALL SLOPES, CHANNELS, DITCHES, AND DISTURBED LAND AREAS SHALL BE INSTALLED IMMEDIATELY UPON COMPLETION OF THE DISTURBANCE.

6. ALL TEMPORARY SEDIMENT AND EROSION CONTROL MEASURES SHALL BE MAINTAINED AND REMAIN IN EFFECTIVE OPERATING CONDITION UNTIL PERMANENT SOIL EROSION CONTROL MEASURES ARE IMPLEMENTED AND FINAL STABILIZATION IS ESTABLISHED. ALL PERSONS ENGAGED IN LAND DISTURBANCE ACTIVITIES SHALL ASSESS THE ADEQUACY OF CONTROL MEASURES AT THE SITE AND IDENTIFY IF CHANGES TO THOSE CONTROL MEASURES ARE NEEDED TO ENSURE THE CONTINUED EFFECTIVE PERFORMANCE OF THE CONTROL MEASURES. ALL CHANGES TO TEMPORARY SEDIMENT AND EROSION CONTROL MEASURES MUST BE INCORPORATED INTO THE STORMWATER MANAGEMENT PLAN.

7. TEMPORARY STABILIZATION SHALL BE IMPLEMENTED ON DISTURBED AREAS AND STOCKPILES WHERE GROUND DISTURBING CONSTRUCTION ACTIVITY HAS PERMANENTLY CEASED OR TEMPORARILY CEASED FOR LONGER THAN 14 DAYS.

8. FINAL STABILIZATION MUST BE IMPLEMENTED AT ALL APPLICABLE CONSTRUCTION SITES. FINAL STABILIZATION IS ACHIEVED WHEN ALL GROUND DISTURBING ACTIVITIES ARE COMPLETE AND ALL DISTURBED AREAS EITHER HAVE A UNIFORM VEGETATIVE COVER WITH INDIVIDUAL PLANT DENSITY OF 70 PERCENT OF PRE-DISTURBANCE LEVELS ESTABLISHED OR EQUIVALENT PERMANENT ALTERNATIVE STABILIZATION METHOD IS IMPLEMENTED. ALL TEMPORARY SEDIMENT AND EROSION CONTROL MEASURES SHALL BE REMOVED UPON FINAL STABILIZATION AND BEFORE PERMIT CLOSURE.

9. ALL PERMANENT STORMWATER MANAGEMENT FACILITIES SHALL BE INSTALLED AS DESIGNED IN THE APPROVED PLANS. ANY PROPOSED CHANGES THAT EFFECT THE DESIGN OR FUNCTION OF PERMANENT STORMWATER MANAGEMENT STRUCTURES MUST BE APPROVED BY THE ECM ADMINISTRATOR PRIOR TO IMPLEMENTATION.

10. EARTH DISTURBANCES SHALL BE CONDUCTED IN SUCH A MANNER SO AS TO EFFECTIVELY MINIMIZE ACCELERATED SOIL EROSION AND RESULTING SEDIMENTATION. ALL DISTURBANCES SHALL BE DESIGNED, CONSTRUCTED, AND COMPLETED SO THAT THE EXPOSED AREA OF ANY DISTURBED LAND SHALL BE LIMITED TO THE SHORTEST PRACTICAL PERIOD OF TIME. PRE-EXISTING VEGETATION SHALL BE PROTECTED AND MAINTAINED WITHIN 50 HORIZONTAL FEET OF A WATERS OF THE STATE UNLESS SHOWN TO BE INFEASIBLE AND SPECIFICALLY REQUESTED AND APPROVED.

11. COMPACTION OF SOIL MUST BE PREVENTED IN AREAS DESIGNATED FOR INFILTRATION CONTROL MEASURES OR WHERE FINAL STABILIZATION WILL BE ACHIEVED BY VEGETATIVE COVER. AREAS DESIGNATED FOR INFILTRATION CONTROL MEASURES SHALL ALSO BE PROTECTED FROM SEDIMENTATION DURING CONSTRUCTION UNTIL FINAL STABILIZATION IS ACHIEVED. IF COMPACTION PREVENTION IS NOT FEASIBLE DUE TO SITE CONSTRAINTS, ALL AREAS DESIGNATED FOR INFILTRATION AND VEGETATION CONTROL MEASURES MUST BE LOOSENED PRIOR TO INSTALLATION OF THE CONTROL MEASURE(S).

12. ANY TEMPORARY OR PERMANENT FACILITY DESIGNED AND CONSTRUCTED FOR THE CONVEYANCE OF STORMWATER AROUND, THROUGH, OR FROM THE EARTH DISTURBANCE AREA SHALL BE A STABILIZED CONVEYANCE DESIGNED TO MINIMIZE EROSION AND THE DISCHARGE OF SEDIMENT OFF SITE.

13. CONCRETE WASH WATER SHALL BE CONTAINED AND DISPOSED OF IN ACCORDANCE WITH THE SWMP. NO WASH WATER SHALL BE DISCHARGED TO OR ALLOWED TO ENTER STATE WATERS, INCLUDING ANY SURFACE OR SUBSURFACE STORM DRAINAGE SYSTEM OR FACILITIES. CONCRETE WASHOUTS SHALL NOT BE LOCATED IN AN AREA WHERE SHALLOW GROUNDWATER MAY BE PRESENT, OR WITHIN 50 FEET OF A SURFACE WATER BODY, CREEK OR STREAM.

14. DURING DEWATERING OPERATIONS OF UNCONTAMINATED GROUND WATER MAY BE DISCHARGED ON SITE, BUT SHALL NOT LEAVE THE SITE IN THE FORM OF SURFACE RUNOFF UNLESS AN APPROVED STATE DEWATERING PERMIT IS IN PLACE.

15. EROSION CONTROL BLANKETING OR OTHER PROTECTIVE COVERING SHALL BE USED ON SLOPES STEEPER THAN 3:1.

16. CONTRACTOR SHALL BE RESPONSIBLE FOR THE REMOVAL OF ALL WASTES FROM THE CONSTRUCTION SITE FOR DISPOSAL IN ACCORDANCE WITH LOCAL AND STATE REGULATORY REQUIREMENTS. NO CONSTRUCTION DEBRIS, TREE SLASH, BUILDING MATERIAL WASTES OR UNUSED BUILDING MATERIALS SHALL BE BURIED, DUMPED, OR DISCHARGED AT THE SITE.

17. WASTE MATERIALS SHALL NOT BE TEMPORARILY PLACED OR STORED IN THE STREET, ALLEY, OR OTHER PUBLIC WAY, UNLESS IN ACCORDANCE WITH AN APPROVED TRAFFIC CONTROL PLAN. CONTROL MEASURES MAY BE REQUIRED BY EL PASO COUNTY ENGINEERING IF DEEMED NECESSARY, BASED ON SPECIFIC CONDITIONS AND CIRCUMSTANCES.

18. TRACKING OF SOILS AND CONSTRUCTION DEBRIS OFF-SITE SHALL BE MINIMIZED. MATERIALS TRACKED OFF-SITE SHALL BE CLEANED UP AND PROPERLY DISPOSED OF IMMEDIATELY.

19. THE OWNER/DEVELOPER SHALL BE RESPONSIBLE FOR THE REMOVAL OF ALL CONSTRUCTION DEBRIS, DIRT, TRASH, ROCK, SEDIMENT, SOIL, AND SAND THAT MAY ACCUMULATE IN ROADS, STORM DRAINS AND OTHER DRAINAGE CONVEYANCE SYSTEMS AND STORMWATER APPURTENANCES AS A RESULT OF SITE DEVELOPMENT.

20. THE QUANTITY OF MATERIALS STORED ON THE PROJECT SITE SHALL BE LIMITED, AS MUCH AS PRACTICAL, TO THAT QUANTITY REQUIRED TO PERFORM THE WORK IN AN ORDERLY SEQUENCE. ALL MATERIALS STORED ON-SITE SHALL BE STORED IN A NEAT, ORDERLY MANNER, IN THEIR ORIGINAL CONTAINERS, WITH ORIGINAL MANUFACTURER'S LABELS.

21. NO CHEMICAL(S) HAVING THE POTENTIAL TO BE RELEASED IN STORMWATER ARE TO BE STORED OR USED ONSITE UNLESS PERMISSION FOR THE USE OF SUCH CHEMICAL(S) IS GRANTED IN WRITING BY THE ECM ADMINISTRATOR. IN GRANTING APPROVAL FOR THE USE OF SUCH CHEMICAL(S), SPECIAL CONDITIONS AND MONITORING MAY BE REQUIRED.

22. BULK STORAGE OF ALLOWED PETROLEUM PRODUCTS OR OTHER ALLOWED LIQUID CHEMICALS IN EXCESS OF 55 GALLONS SHALL REQUIRE ADEQUATE SECONDARY CONTAINMENT PROTECTION TO CONTAIN ALL SPILLS ONSITE AND TO PREVENT ANY SPILLED MATERIALS FROM ENTERING STATE WATERS, ANY SURFACE OR SUBSURFACE STORM DRAINAGE SYSTEM OR OTHER FACILITIES.

23. NO PERSON SHALL CAUSE THE IMPEDIMENT OF STORMWATER FLOW IN THE CURB AND GUTTER OR DITCH EXCEPT WITH APPROVED SEDIMENT CONTROL MEASURES.

24. OWNER/DEVELOPER AND THEIR AGENTS SHALL COMPLY WITH THE "COLORADO WATER QUALITY CONTROL ACT" (TITLE 25, ARTICLE 8, CRS), AND THE "CLEAN WATER ACT" (33 USC 1344), IN ADDITION TO THE REQUIREMENTS OF THE LAND DEVELOPMENT CODE, DCM VOLUME II AND THE ECM APPENDIX I. ALL APPROPRIATE PERMITS MUST BE OBTAINED BY THE CONTRACTOR PRIOR TO CONSTRUCTION (1041, NPDES, FLOODPLAIN, 404, FUGITIVE DUST, ETC.). IN THE EVENT OF CONFLICTS BETWEEN THESE REQUIREMENTS AND OTHER LAWS, RULES, OR REGULATIONS OF OTHER FEDERAL, STATE, LOCAL, OR COUNTY AGENCIES, THE MOST RESTRICTIVE LAWS, RULES, OR REGULATIONS SHALL APPLY.

25. ALL CONSTRUCTION TRAFFIC MUST ENTER/EXIT THE SITE ONLY AT APPROVED CONSTRUCTION ACCESS POINTS.

26. PRIOR TO CONSTRUCTION THE PERMITTEE SHALL VERIFY THE LOCATION OF EXISTING UTILITIES.

27. A WATER SOURCE SHALL BE AVAILABLE ON SITE DURING EARTHWORK OPERATIONS AND SHALL BE UTILIZED AS REQUIRED TO MINIMIZE DUST FROM EARTHWORK EQUIPMENT AND WIND.

28. THE SOILS REPORT FOR THIS SITE HAS BEEN PREPARED BY KUMAR & ASSOCIATES, INC. AND SHALL BE CONSIDERED A PART OF THESE PLANS.

29. AT LEAST TEN (10) DAYS PRIOR TO THE ANTICIPATED START OF CONSTRUCTION, FOR PROJECTS THAT WILL DISTURB ONE (1) ACRE OR MORE, THE OWNER OR OPERATOR OF CONSTRUCTION ACTIVITY SHALL SUBMIT A PERMIT APPLICATION FOR STORMWATER DISCHARGE TO THE COLORADO DEPARTMENT OF PUBLIC HEALTH AND ENVIRONMENT, WATER QUALITY DIVISION. THE APPLICATION CONTAINS CERTIFICATION OF COMPLETION OF A STORMWATER MANAGEMENT PLAN (SWMP), OF WHICH THIS GRADING AND EROSION CONTROL PLAN MAY BE A PART. FOR INFORMATION OR APPLICATION MATERIALS CONTACT:

COLORADO DEPARTMENT OF PUBLIC HEALTH AND ENVIRONMENT
WATER QUALITY CONTROL DIVISION
WQCD – PERMITS
4300 CHERRY CREEK DRIVE SOUTH
DENVER, CO 80246-1530
ATTN: PERMITS UNIT

ENGINEER'S STATEMENT:
THIS GRADING AND EROSION CONTROL PLAN WAS PREPARED UNDER MY DIRECTION AND SUPERVISION AND IS CORRECT TO THE BEST OF MY KNOWLEDGE AND BELIEF. SAID PLAN HAS BEEN PREPARED ACCORDING TO THE CRITERIA ESTABLISHED BY THE COUNTY FOR GRADING AND EROSION CONTROL PLANS. I ACCEPT RESPONSIBILITY FOR ANY LIABILITY CAUSED BY ANY NEGLIGENT ACTS, ERRORS OR OMISSIONS ON MY PART IN PREPARING THIS PLAN.

ENGINEER OF RECORD SIGNATURE — DATE: 12/11/2020

OWNER'S/DEVELOPER'S STATEMENT:
I, THE OWNER/DEVELOPER HAVE READ AND WILL COMPLY WITH THE REQUIREMENTS OF THE GRADING AND EROSION CONTROL PLAN.

OWNER SIGNATURE — DATE: 12-14-20

EL PASO COUNTY:
COUNTY PLAN REVIEW IS PROVIDED ONLY FOR GENERAL CONFORMANCE WITH COUNTY DESIGN CRITERIA. THE COUNTY IS NOT RESPONSIBLE FOR THE ACCURACY AND ADEQUACY OF THE DESIGN, DIMENSIONS, AND/OR ELEVATIONS WHICH SHALL BE CONFIRMED AT THE JOB SITE. THE COUNTY THROUGH THE APPROVAL OF THIS DOCUMENT ASSUMES NO RESPONSIBILITY FOR COMPLETENESS AND/OR ACCURACY OF THIS DOCUMENT. FILED IN ACCORDANCE WITH THE REQUIREMENTS OF THE EL PASO COUNTY LAND DEVELOPMENT CODE. DRAINAGE CRITERIA MANUAL VOLUMES 1 AND 2, AND ENGINEERING CRITERIA MANUAL, AS AMENDED.

IN ACCORDANCE WITH ECM SECTION 1.12, THESE CONSTRUCTION DOCUMENTS WILL BE VALID FOR CONSTRUCTION FOR A PERIOD OF 2 YEARS FROM THE DATE SIGNED BY THE EL PASO COUNTY ENGINEER. IF CONSTRUCTION HAS NOT STARTED WITHIN THOSE 2 YEARS, THE PLANS WILL NEED TO BE RESUBMITTED FOR APPROVAL, INCLUDING PAYMENT OF REVIEW FEES AT THE PLANNING AND COMMUNITY DEVELOPMENT DIRECTOR'S DISCRETION.

COUNTY ENGINEER/ECM ADMINISTRATOR — DATE

PCD FILING NO: PPR-20-044

no.	date	by	ckd	description
0	11/13/20	MJL	NT	ISSUED FOR EL PASO COUNTY PERMIT REVIEW
1	12/11/20	MJL	NT	REISSUED FOR EL PASO COUNTY PERMIT REVIEW

BURNS McDONNELL
9785 Maroon Cir., Suite 400
Centennial, CO 80112
303-721-9292

date	detailed
DECEMBER 2020	M. LIESENDAHL
designed	**checked**
M. LIESENDAHL	N. TESSITORE

CHEROKEE METROPOLITAN DISTRICT
TDS REDUCTION FACILITY
EROSION & SEDIMENT CONTROL NOTES

project 119461 — contract

drawing CE001 — rev. 1

sheet 29 of sheets

file 119461_CE001.DWG

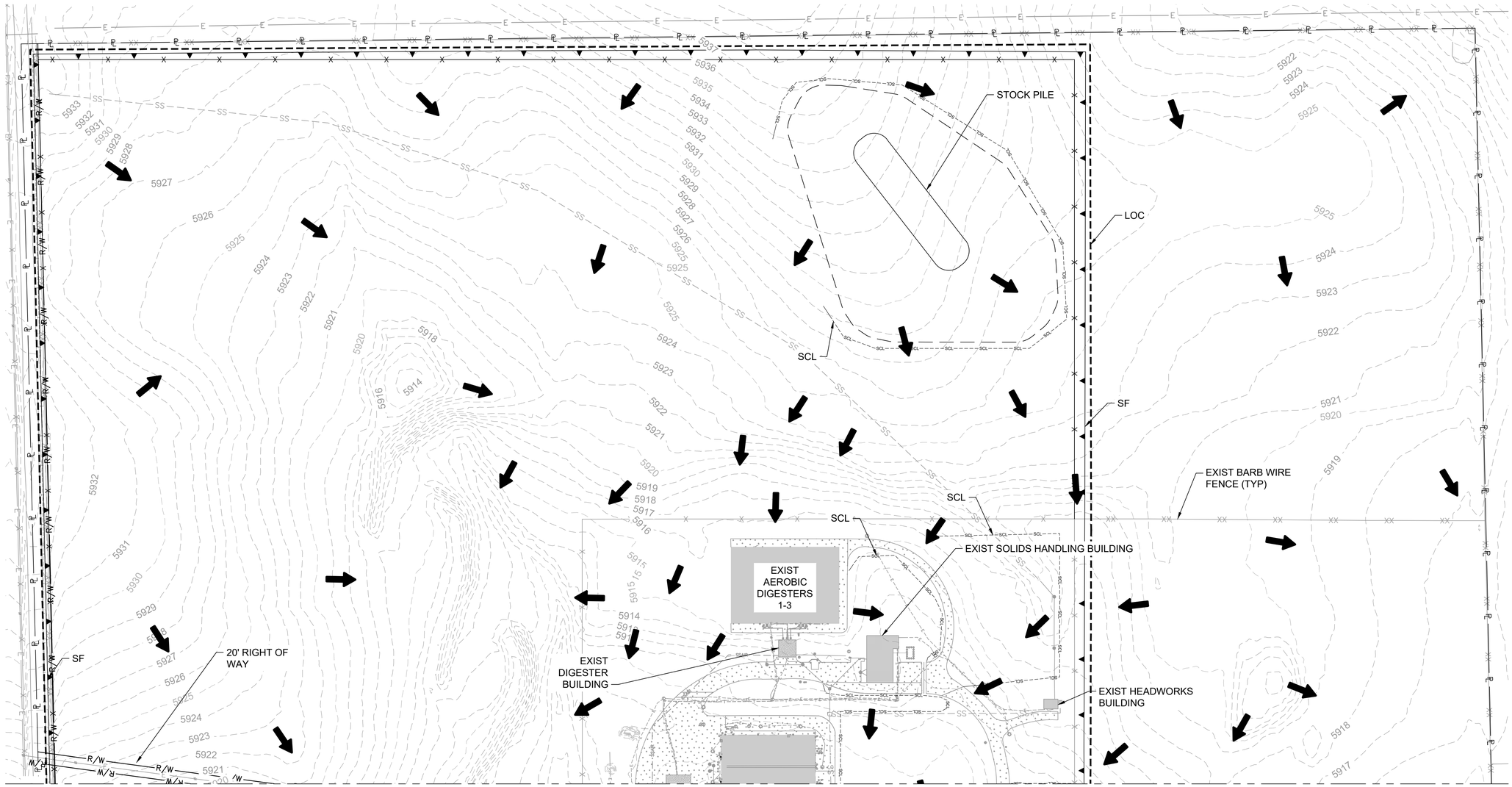

SEE SHEET CE102

NOTES:

1. DESIGN/BUILDER MAY CHOOSE TO USE ROCK SOCKS OR SEDIMENT CONTROL LOGS ON NATURAL GRASS AREA, WHERE INDICATED.
2. SEDIMENT CONTROL LOGS SHALL NOT BE USED ON PAVED, GRAVEL, OR RIPRAP SURFACES.
3. THE SITE IS LOCATED IN FEMA ZONE X "AREA OF MINIMAL FLOOD HAZARD."
4. THERE IS NO NOTABLE EXISTING VEGETATION ON SITE. ALL EXISTING VEGETATION IS GRASSES/WEEDS.
5. THIS PACKAGE WAS PREPARED UTILIZING THE GEOTECHNICAL RECOMMENDATIONS OUTLINED IN "GEOTECHNICAL ENGINEERING STUDY" FOR PROJECT NO. 20-2-126, PREPARED BY KUMAR & ASSOCIATES, INC. [REVISED 05/27/20]. SEE DOCUMENT FOR ADDITIONAL INFORMATION.

NORTH

INITIAL EROSION & SEDIMENT CONROL PLAN I

0 100' 200'
SCALE IN FEET

LEGEND:

- SILT FENCE (SF) (1 / CG502)
- CONSTRUCTION BOUNDARY/LIMITS OF DISTURBANCE
- CHAIN LINK FENCE
- CONCRETE WASHOUT AREA (CWA) (2 / CG502)
- STABILIZED STAGING AREA (SSA) (2 / CG501)
- FODS TRACKOUT CONTROL MAT SYSTEM OR APPROVED EQUAL (VTC) (1 / CG503)
- BARB WIRE FENCE
- SEDIMENT CONTROL LOG (SCL) (3 / CG502)
- FLOW DIRECTION

PCD FILING NO: PPR-20-044

no.	date	by	ckd	description
0	10/2/20	MJL	NT	ISSUED FOR PERMIT REVIEW
1	11/13/20	MJL	NT	ISSUED FOR EL PASO COUNTY PERMIT REVIEW
2	12/11/20	MJL	NT	REISSUED FOR EL PASO COUNTY PERMIT REVIEW

BURNS McDONNELL
9785 Maroon Cir., Suite 400
Centennial, CO 80112
303-721-9292

date	detailed
DECEMBER 2020	M. LIESENDAHL
designed	**checked**
M. LIESENDAHL	N. TESSITORE

CHEROKEE METROPOLITAN DISTRICT

CHEROKEE METROPOLITAN DISTRICT TDS REDUCTION FACILITY

INITIAL EROSION & SEDIMENT CONROL PLAN I

project	contract
119461	

drawing **CE101** – rev. **2**

sheet 30 of sheets

file 119461_CE101.DWG

41295
12/11/2020
PROFESSIONAL ENGINEER

Z:\CLIENTS\WTR\CHEROKEEMETR\119461_TDSREDUCE\DESIGN\CADD\CIVIL\PROD_DWGS\119461_CE101.DWG 12/11/2020 1:47 PM MJLIESENDAHL

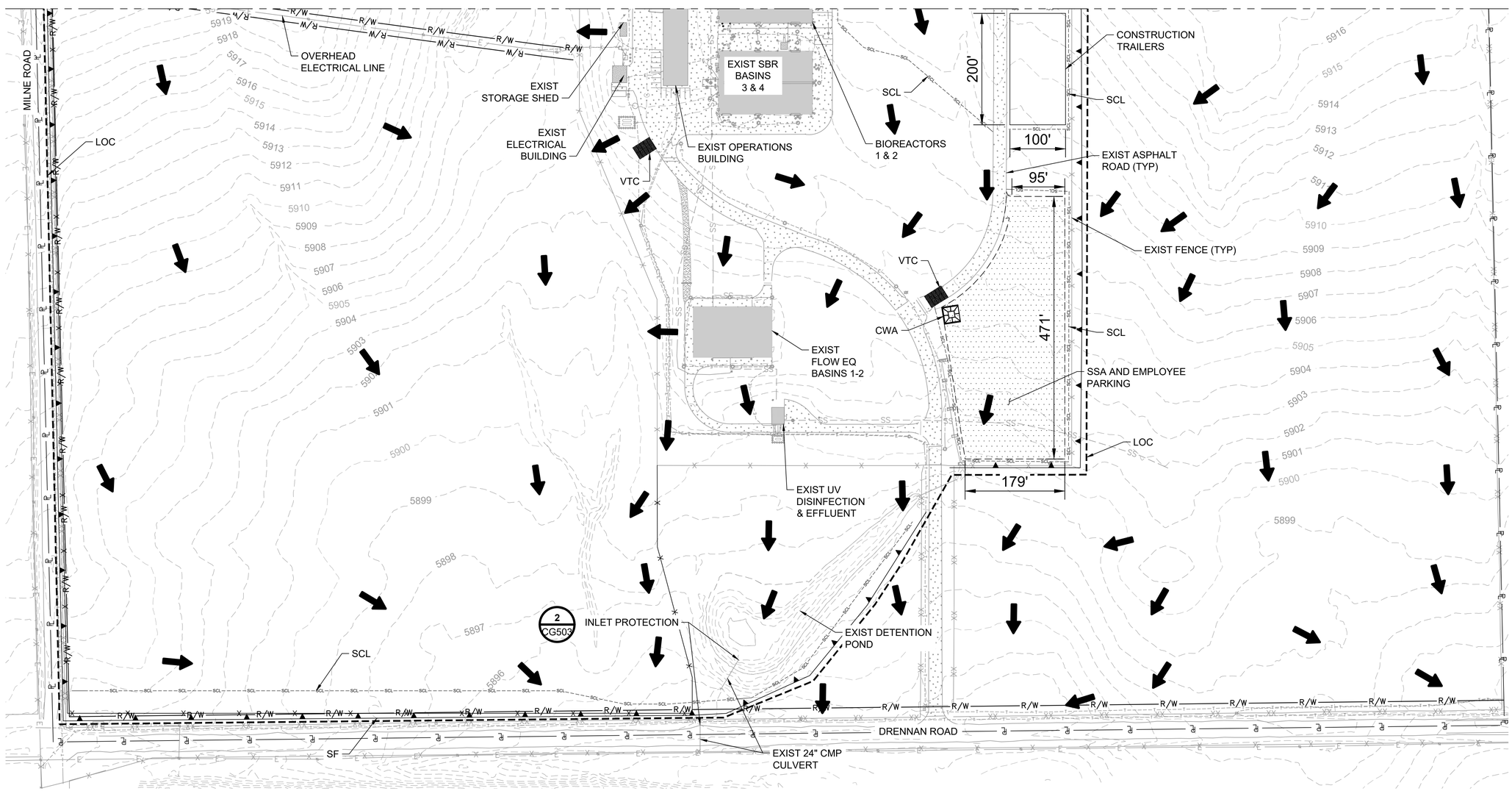

NOTES:

1. DESIGN/BUILDER MAY CHOOSE TO USE ROCK SOCKS OR SEDIMENT CONTROL LOGS ON NATURAL GRASS AREA, WHERE INDICATED.
2. SEDIMENT CONTROL LOGS SHALL NOT BE USED ON PAVED, GRAVEL, OR RIPRAP SURFACES.
3. THE SITE IS LOCATED IN FEMA ZONE X "AREA OF MINIMAL FLOOD HAZARD."
4. THERE IS NO NOTABLE EXISTING VEGETATION ON SITE. ALL EXISTING VEGETATION IS GRASSES/WEEDS.
5. THIS PACKAGE WAS PREPARED UTILIZING THE GEOTECHNICAL RECOMMENDATIONS OUTLINED IN "GEOTECHNICAL ENGINEERING STUDY" FOR PROJECT NO. 20-2-126, PREPARED BY KUMAR & ASSOCIATES, INC. [REVISED 05/27/20]. SEE DOCUMENT FOR ADDITIONAL INFORMATION.

NORTH

INITIAL EROSION & SEDIMENT CONTROL PLAN II

0 100' 200'
SCALE IN FEET

LEGEND:

- SILT FENCE (SF) — 1 / CG502
- CONSTRUCTION BOUNDARY/LIMITS OF DISTURBANCE
- CHAIN LINK FENCE
- CONCRETE WASHOUT AREA (CWA) — 2 / CG502
- STABILIZED STAGING AREA (SSA) — 2 / CG501
- FODS TRACKOUT CONTROL MAT SYSTEM OR APPROVED EQUAL (VTC) — 1 / CG503
- BARB WIRE FENCE
- SEDIMENT CONTROL LOG (SCL) — 3 / CG502
- FLOW DIRECTION

PCD FILING NO: PPR-20-044

no.	date	by	ckd	description
0	10/2/20	MJL	NT	ISSUED FOR PERMIT REVIEW
1	11/13/20	MJL	NT	ISSUED FOR EL PASO COUNTY PERMIT REVIEW
2	12/11/20	MJL	NT	REISSUED FOR EL PASO COUNTY PERMIT REVIEW

BURNS McDONNELL
9785 Maroon Cir., Suite 400
Centennial, CO 80112
303-721-9292

date	detailed
DECEMBER 2020	M. LIESENDAHL
designed	**checked**
M. LIESENDAHL	N. TESSITORE

CHEROKEE METROPOLITAN DISTRICT

CHEROKEE METROPOLITAN DISTRICT
TDS REDUCTION FACILITY
INITIAL EROSION & SEDIMENT CONTROL PLAN II

project	contract
119461	

drawing **CE102** — rev. **2**

sheet 31 of sheets

file 119461_CE102.DWG

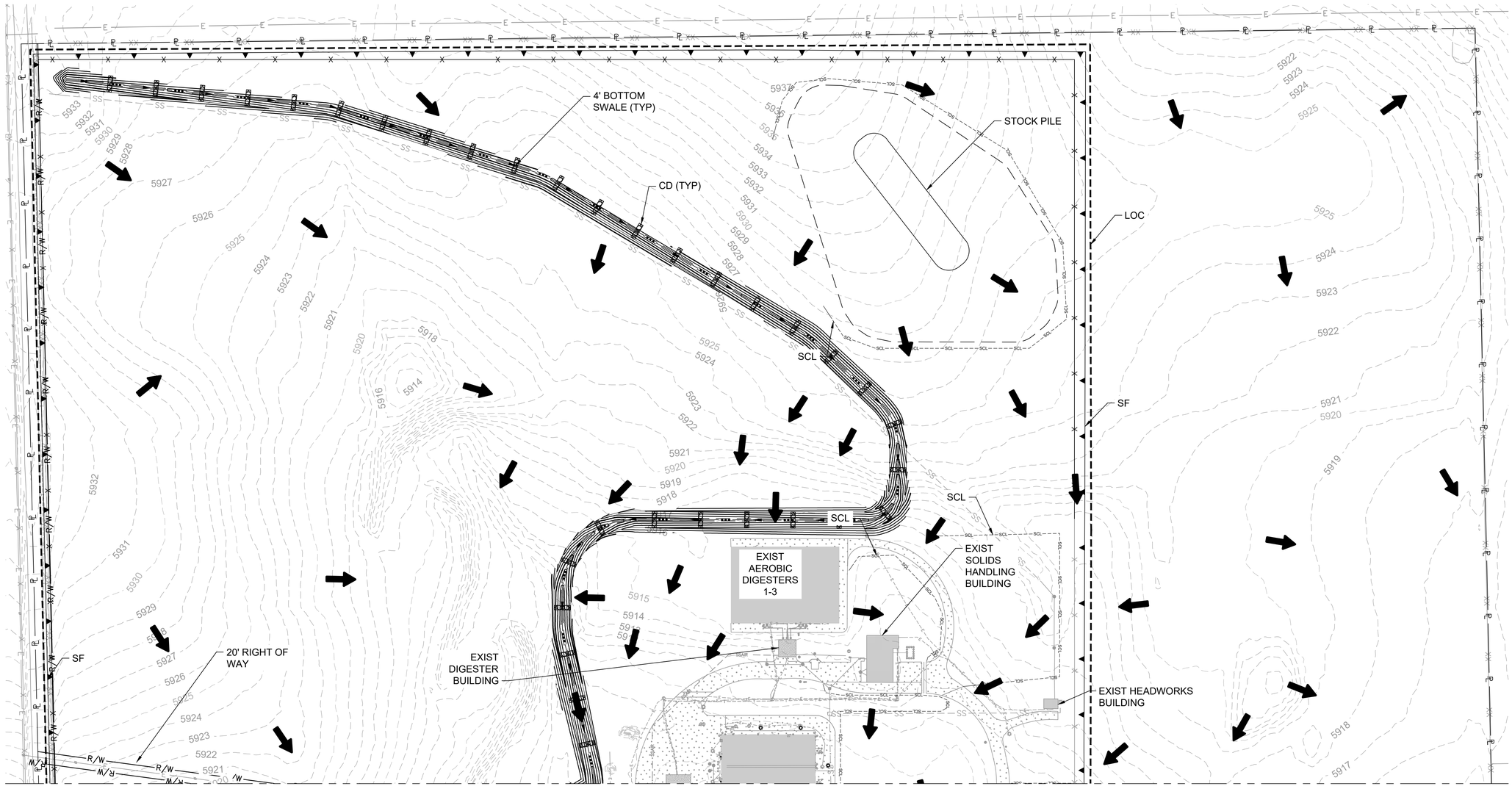

SEE SHEET CE104

NORTH

INTERIM EROSION & SEDIMENT CONTROL PLAN I

0 100' 200'
SCALE IN FEET

NOTES:

1. DESIGN/BUILDER MAY CHOOSE TO USE ROCK SOCKS OR SEDIMENT CONTROL LOGS ON NATURAL GRASS AREA, WHERE INDICATED.
2. SEDIMENT CONTROL LOGS SHALL NOT BE USED ON PAVED, GRAVEL, OR RIPRAP SURFACES.
3. INSTALL ROCK CHECK DAMS WITH A 50 FT SPACING PER DETAIL 1 ON SHEET CG501 IN SWALE.
4. THE SITE IS LOCATED IN FEMA ZONE X "AREA OF MINIMAL FLOOD HAZARD."
5. THERE IS NO NOTABLE EXISTING VEGETATION ON SITE. ALL EXISTING VEGETATION IS GRASSES/WEEDS.
6. THIS PACKAGE WAS PREPARED UTILIZING THE GEOTECHNICAL RECOMMENDATIONS OUTLINED IN "GEOTECHNICAL ENGINEERING STUDY" FOR PROJECT NO. 20-2-126, PREPARED BY KUMAR & ASSOCIATES, INC. [REVISED 05/27/20]. SEE DOCUMENT FOR ADDITIONAL INFORMATION.

LEGEND:

- SILT FENCE (SF) — 1 / CG502
- CONSTRUCTION BOUNDARY/LIMITS OF DISTURBANCE
- CHAIN LINK FENCE
- CONCRETE WASHOUT AREA (CWA) — 2 / CG502
- STABILIZED STAGING AREA (SSA) — 2 / CG501
- FODS TRACKOUT CONTROL MAT SYSTEM OR APPROVED EQUAL (VTC) — 1 / CG503
- BARB WIRE FENCE
- SEDIMENT CONTROL LOG (SCL) — 3 / CG502
- FLOW DIRECTION
- ROCK CHECK DAM (CD) — 1 / CG501

PCD FILING NO: PPR-20-044

no.	date	by	ckd	description
0	10/2/20	MJL	NT	ISSUED FOR PERMIT REVIEW
1	11/13/20	MJL	NT	ISSUED FOR EL PASO COUNTY PERMIT REVIEW
2	12/11/20	MJL	NT	REISSUED FOR EL PASO COUNTY PERMIT REVIEW

BURNS McDONNELL
9785 Maroon Cir., Suite 400
Centennial, CO 80112
303-721-9292

date	detailed
DECEMBER 2020	M. LIESENDAHL
designed	**checked**
M. LIESENDAHL	N. TESSITORE

CHEROKEE METROPOLITAN DISTRICT

CHEROKEE METROPOLITAN DISTRICT
TDS REDUCTION FACILITY
INTERIM EROSION & SEDIMENT CONTROL PLAN I

project	contract
119461	

drawing **CE103** – rev. **2**

sheet 32 of sheets

file 119461_CE103.DWG

NICHOLAS E. TESSITORE 41295 12/11/2020 PROFESSIONAL ENGINEER

SEE SHEET CE103

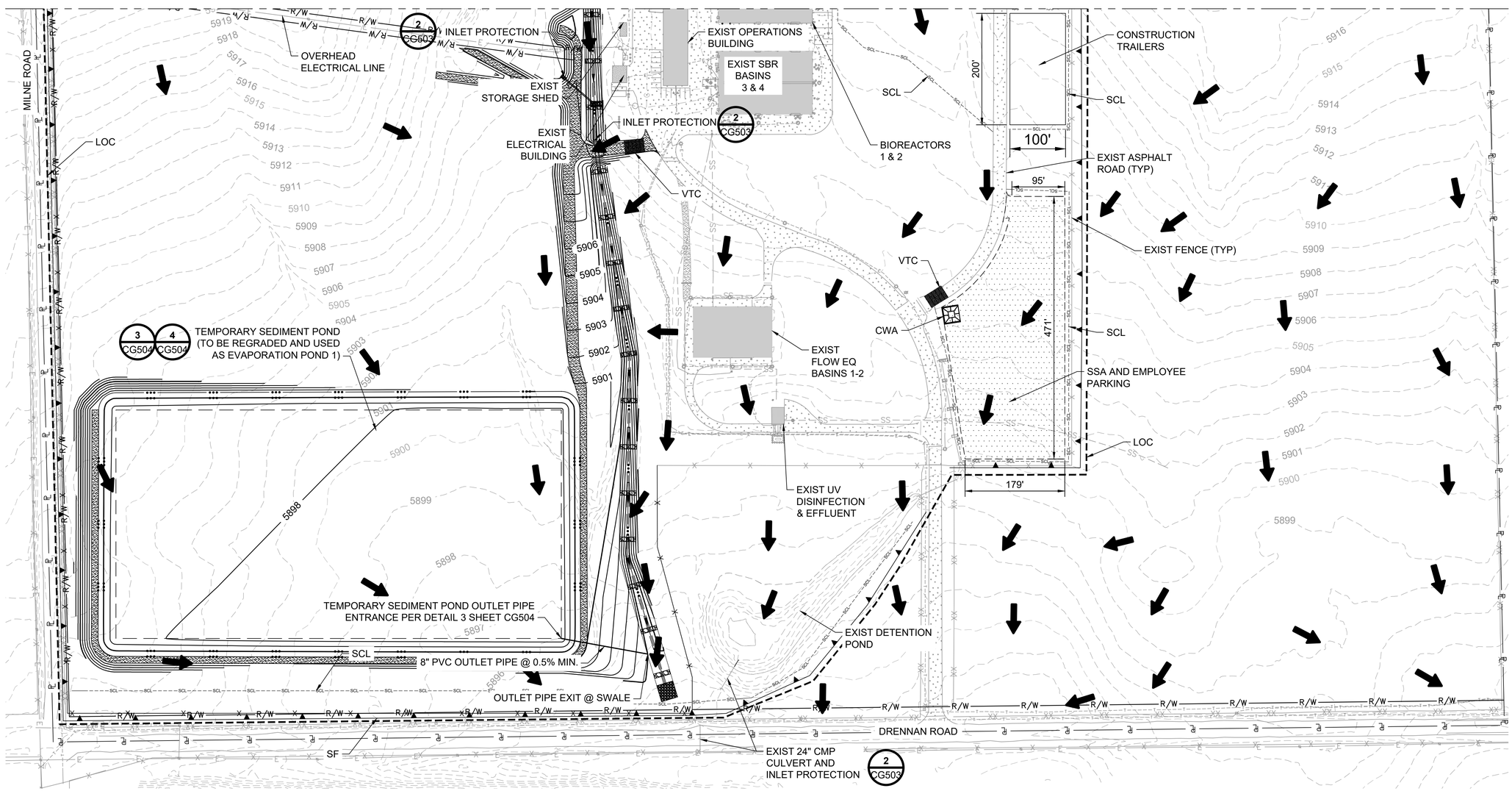

NOTES:

1. DESIGN/BUILDER MAY CHOOSE TO USE ROCK SOCKS OR SEDIMENT CONTROL LOGS ON NATURAL GRASS AREA, WHERE INDICATED.
2. SEDIMENT CONTROL LOGS SHALL NOT BE USED ON PAVED, GRAVEL, OR RIPRAP SURFACES.
3. INSTALL ROCK CHECK DAMS WITH A 50FT SPACING PER DETAIL 1 ON SHEET CG501 IN SWALE.
4. THE SITE IS LOCATED IN FEMA ZONE X "AREA OF MINIMAL FLOOD HAZARD."
5. THERE IS NO NOTABLE EXISTING VEGETATION ON SITE. ALL EXISTING VEGETATION IS GRASSES/WEEDS.
6. THIS PACKAGE WAS PREPARED UTILIZING THE GEOTECHNICAL RECOMMENDATIONS OUTLINED IN "GEOTECHNICAL ENGINEERING STUDY" FOR PROJECT NO. 20-2-126, PREPARED BY KUMAR & ASSOCIATES, INC. [REVISED 05/27/20]. SEE DOCUMENT FOR ADDITIONAL INFORMATION.

NORTH

INTERIM EROSION & SEDIMENT CONTROL PLAN II

0 100' 200'
SCALE IN FEET

LEGEND:

- SILT FENCE (SF) — 1 CG502
- CONSTRUCTION BOUNDARY/LIMITS OF DISTURBANCE
- CHAIN LINK FENCE
- CONCRETE WASHOUT AREA (CWA) — 2 CG502
- STABILIZED STAGING AREA (SSA) — 2 CG501
- FODS TRACKOUT CONTROL MAT SYSTEM OR APPROVED EQUAL (VTC) — 1 CG503
- BARB WIRE FENCE
- SEDIMENT CONTROL LOG (SCL) — 3 CG502
- FLOW DIRECTION
- ROCK CHECK DAM (CD) — 1 CG501

PCD FILING NO: PPR-20-044

no.	date	by	ckd	description
0	11/13/20	MJL	NT	ISSUED FOR EL PASO COUNTY PERMIT REVIEW
1	12/11/20	MJL	NT	REISSUED FOR EL PASO COUNTY PERMIT REVIEW

BURNS McDONNELL
9785 Maroon Cir., Suite 400
Centennial, CO 80112
303-721-9292

date	detailed
DECEMBER 2020	M. LIESENDAHL
designed	**checked**
M. LIESENDAHL	N. TESSITORE

CHEROKEE METROPOLITAN DISTRICT

CHEROKEE METROPOLITAN DISTRICT TDS REDUCTION FACILITY

INTERIM EROSION & SEDIMENT CONTROL PLAN II

project	contract
119461	

drawing **CE104** – rev. **1**

sheet 33 of sheets

file 119461_CE104.DWG

NICHOLAS TESSITORE 41295 12/11/2020 PROFESSIONAL ENGINEER

Z:\CLIENTS\WTR\CHEROKEEMETR\119461_TDSREDUCE\DESIGN\CADD\CIVIL\PROD_DWGS\119461_CE104.DWG 12/11/2020 2:55 PM MJLIESENDAHL

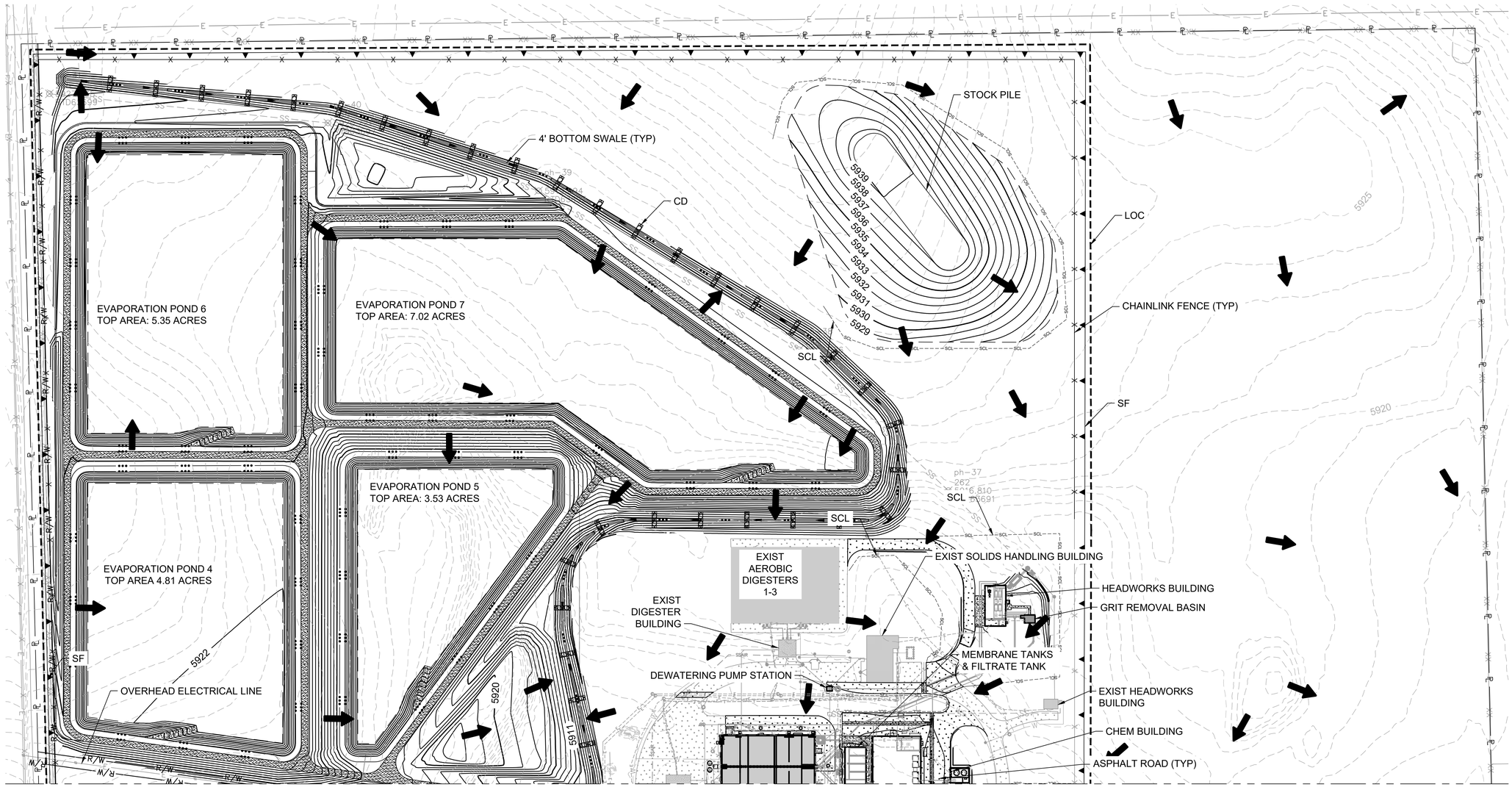

SEE SHEET CE106

NOTES:

1. DESIGN/BUILDER MAY CHOOSE TO USE ROCK SOCKS OR SEDIMENT CONTROL LOGS ON NATURAL GRASS AREA, WHERE INDICATED.
2. SEDIMENT CONTROL LOGS SHALL NOT BE USED ON PAVED, GRAVEL, OR RIPRAP SURFACES.
3. INSTALL ROCK CHECK DAMS WITH A 50 FT SPACING PER DETAIL 1 ON SHEET CG501 IN SWALE.
4. THE SITE IS LOCATED IN FEMA ZONE X "AREA OF MINIMAL FLOOD HAZARD."
5. THERE IS NO NOTABLE EXISTING VEGETATION ON SITE. ALL EXISTING VEGETATION IS GRASSES/WEEDS.
6. THIS PACKAGE WAS PREPARED UTILIZING THE GEOTECHNICAL RECOMMENDATIONS OUTLINED IN "GEOTECHNICAL ENGINEERING STUDY" FOR PROJECT NO. 20-2-126, PREPARED BY KUMAR & ASSOCIATES, INC. [REVISED 05/27/20]. SEE DOCUMENT FOR ADDITIONAL INFORMATION .

NORTH

INTERIM EROSION & SEDIMENT CONTROL PLAN III

0 100' 200'
SCALE IN FEET

LEGEND:

- SILT FENCE (SF) — 1 / CG502
- CONSTRUCTION BOUNDARY/LIMITS OF DISTURBANCE
- CHAIN LINK FENCE
- CONCRETE WASHOUT AREA (CWA) — 2 / CG502
- STABILIZED STAGING AREA (SSA) — 2 / CG501
- FODS TRACKOUT CONTROL MAT SYSTEM OR APPROVED EQUAL (VTC) — 1 / CG503
- BARB WIRE FENCE
- SEDIMENT CONTROL LOG (SCL) — 3 / CG502
- FLOW DIRECTION
- ROCK CHECK DAM (CD) — 1 / CG501

PCD FILING NO: PPR-20-044

no.	date	by	ckd	description
0	12/11/20	MJL	NT	REISSUED FOR EL PASO COUNTY PERMIT REVIEW

BURNS McDONNELL
9785 Maroon Cir., Suite 400
Centennial, CO 80112
303-721-9292

date	detailed
DECEMBER 2020	M. LIESENDAHL
designed	**checked**
M. LIESENDAHL	N. TESSITORE

CHEROKEE METROPOLITAN DISTRICT

CHEROKEE METROPOLITAN DISTRICT
TDS REDUCTION FACILITY
INTERIM EROSION & SEDIMENT CONTROL PLAN III

project	contract
119461	

drawing **CE105** – rev. **0**

sheet 34 of sheets

file 119461_CE105.DWG

NICHOLAS TESSITORE 41295 12/11/2020 PROFESSIONAL ENGINEER

SEE SHEET CE105

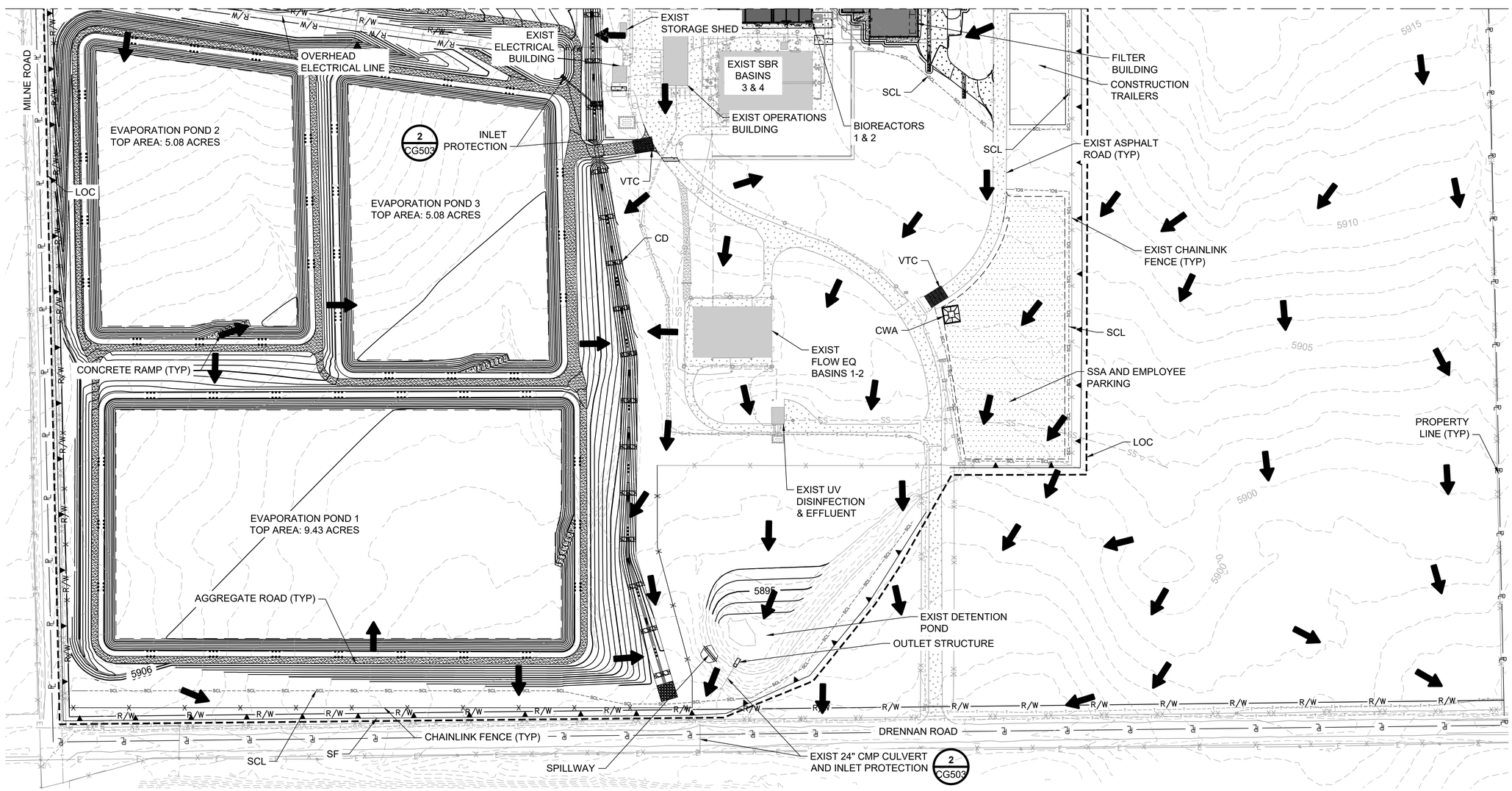

NOTES:

1. DESIGN/BUILDER MAY CHOOSE TO USE ROCK SOCKS OR SEDIMENT CONTROL LOGS ON NATURAL GRASS AREA, WHERE INDICATED.
2. SEDIMENT CONTROL LOGS SHALL NOT BE USED ON PAVED, GRAVEL, OR RIPRAP SURFACES.
3. INSTALL ROCK CHECK DAMS WITH A 50FT SPACING PER DETAIL 1 ON SHEET CG501 IN SWALE.
4. THE SITE IS LOCATED IN FEMA ZONE X "AREA OF MINIMAL FLOOD HAZARD."
5. THERE IS NO NOTABLE EXISTING VEGETATION ON SITE. ALL EXISTING VEGETATION IS GRASSES/WEEDS.
6. THIS PACKAGE WAS PREPARED UTILIZING THE GEOTECHNICAL RECOMMENDATIONS OUTLINED IN "GEOTECHNICAL ENGINEERING STUDY" FOR PROJECT NO. 20-2-126, PREPARED BY KUMAR & ASSOCIATES, INC. [REVISED 05/27/20]. SEE DOCUMENT FOR ADDITIONAL INFORMATION .

NORTH

INTERIM EROSION & SEDIMENT CONTROL PLAN IV

0 100' 200'
SCALE IN FEET

LEGEND:

- SILT FENCE (SF) — 1 CG502
- CONSTRUCTION BOUNDARY/LIMITS OF DISTURBANCE
- CHAIN LINK FENCE
- CONCRETE WASHOUT AREA (CWA) — 2 CG502
- STABILIZED STAGING AREA (SSA) — 2 CG501
- FODS TRACKOUT CONTROL MAT SYSTEM OR APPROVED EQUAL (VTC) — 1 CG503
- BARB WIRE FENCE
- SEDIMENT CONTROL LOG (SCL) — 3 CG502
- FLOW DIRECTION
- ROCK CHECK DAM (CD) — 1 CG501

PCD FILING NO: PPR-20-044

no.	date	by	ckd	description
0	12/11/20	MJL	NT	REISSUED FOR EL PASO COUNTY PERMIT REVIEW

BURNS McDONNELL
9785 Maroon Cir., Suite 400
Centennial, CO 80112
303-721-9292

date	detailed
DECEMBER 2020	M. LIESENDAHL
designed	**checked**
M. LIESENDAHL	N. TESSITORE

CHEROKEE METROPOLITAN DISTRICT

CHEROKEE METROPOLITAN DISTRICT
TDS REDUCTION FACILITY
INTERIM EROSION & SEDIMENT CONTROL PLAN IV

project	contract
119461	

drawing **CE106** – rev. **0**

sheet 35 of sheets

file 119461_CE106.DWG

NICHOLAS TESSITORE 41295 12/11/2020 PROFESSIONAL ENGINEER

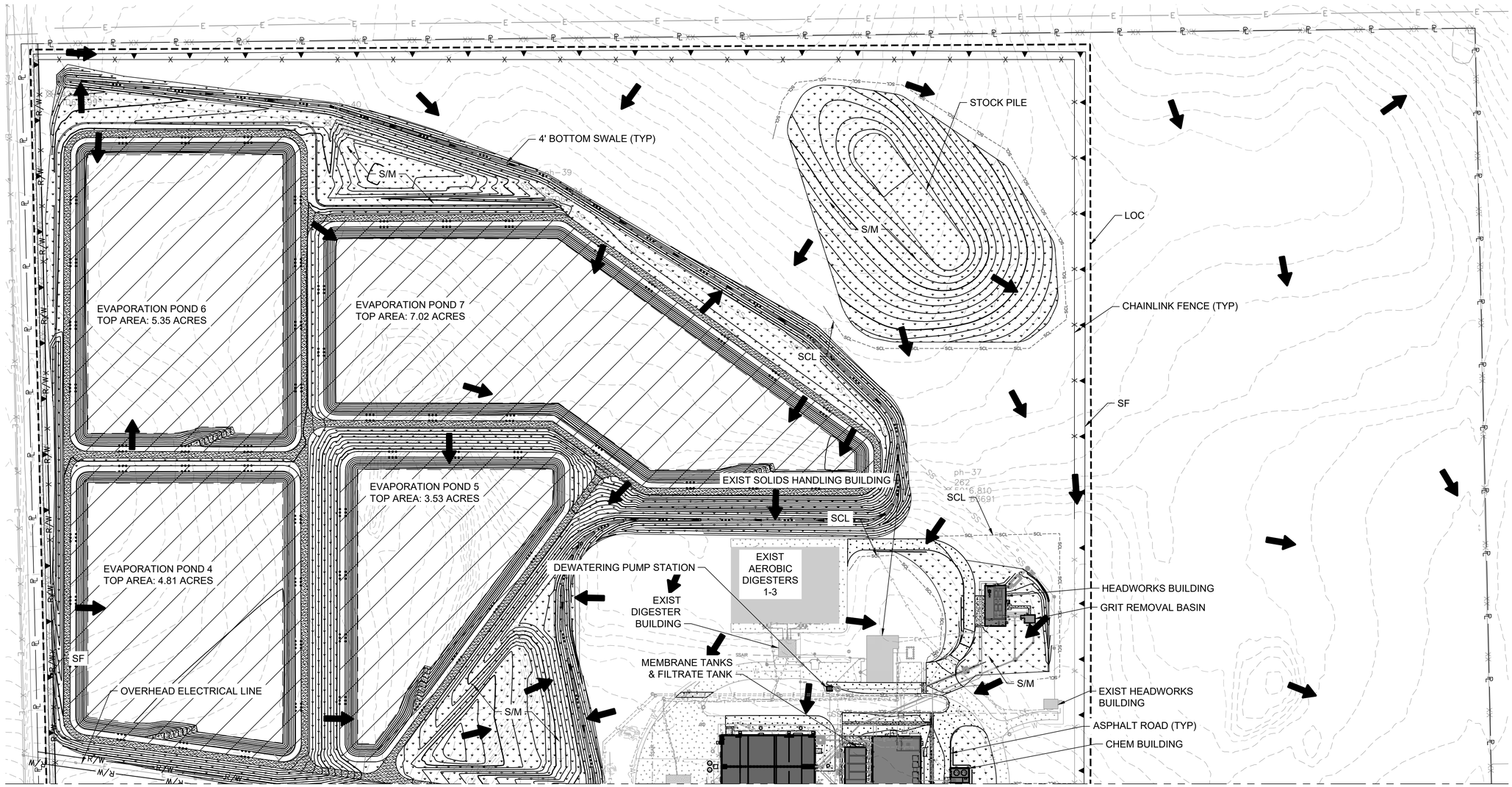

SEE SHEET CE106

NOTES:

1. DESIGN/BUILDER MAY CHOOSE TO USE ROCK SOCKS OR SEDIMENT CONTROL LOGS ON NATURAL GRASS AREA, WHERE INDICATED.
2. SEDIMENT CONTROL LOGS SHALL NOT BE USED ON PAVED, GRAVEL, OR RIPRAP SURFACES.
3. ALL DISTURBED EARTHEN AREAS TO BE SEEDED AND MULCHED WITH A NATIVE SEED MIX
4. THE SITE IS LOCATED IN FEMA ZONE X "AREA OF MINIMAL FLOOD HAZARD."
5. THERE IS NO NOTABLE EXISTING VEGETATION ON SITE. ALL EXISTING VEGETATION IS GRASSES/WEEDS.
6. THIS PACKAGE WAS PREPARED UTILIZING THE GEOTECHNICAL RECOMMENDATIONS OUTLINED IN "GEOTECHNICAL ENGINEERING STUDY" FOR PROJECT NO. 20-2-126, PREPARED BY KUMAR & ASSOCIATES, INC. [REVISED 05/27/20]. SEE DOCUMENT FOR ADDITIONAL INFORMATION .

NORTH

FINAL EROSION & SEDIMENT CONTROLS PLAN I

0 100' 200'
SCALE IN FEET

LEGEND:

- SILT FENCE (SF) — 1 / CG502
- CONSTRUCTION BOUNDARY/LIMITS OF DISTURBANCE
- CHAIN LINK FENCE
- SEEDING & MULCHING (S/M) — 1 / CG504, 2 / CG504
- EVAPORATION POND LINER
- BARB WIRE FENCE
- FLOW DIRECTION
- ROCK CHECK DAM (CD) — 1 / CG501

PCD FILING NO: PPR-20-044

no.	date	by	ckd	description
0	12/11/20	MJL	NT	REISSUED FOR EL PASO COUNTY PERMIT REVIEW

BURNS McDONNELL
9785 Maroon Cir., Suite 400
Centennial, CO 80112
303-721-9292

date	detailed
DECEMBER 2020	M. LIESENDAHL
designed	**checked**
M. LIESENDAHL	N. TESSITORE

CHEROKEE METROPOLITAN DISTRICT

CHEROKEE METROPOLITAN DISTRICT
TDS REDUCTION FACILITY
FINAL EROSION & SEDIMENT CONTROLS PLAN I

project	contract
119461	

drawing **CE107** – rev. **0**

sheet 36 of sheets

file 119461_CE107.DWG

NICHOLAS TESSITORE 41295 12/11/2020 PROFESSIONAL ENGINEER

SEE SHEET CE107

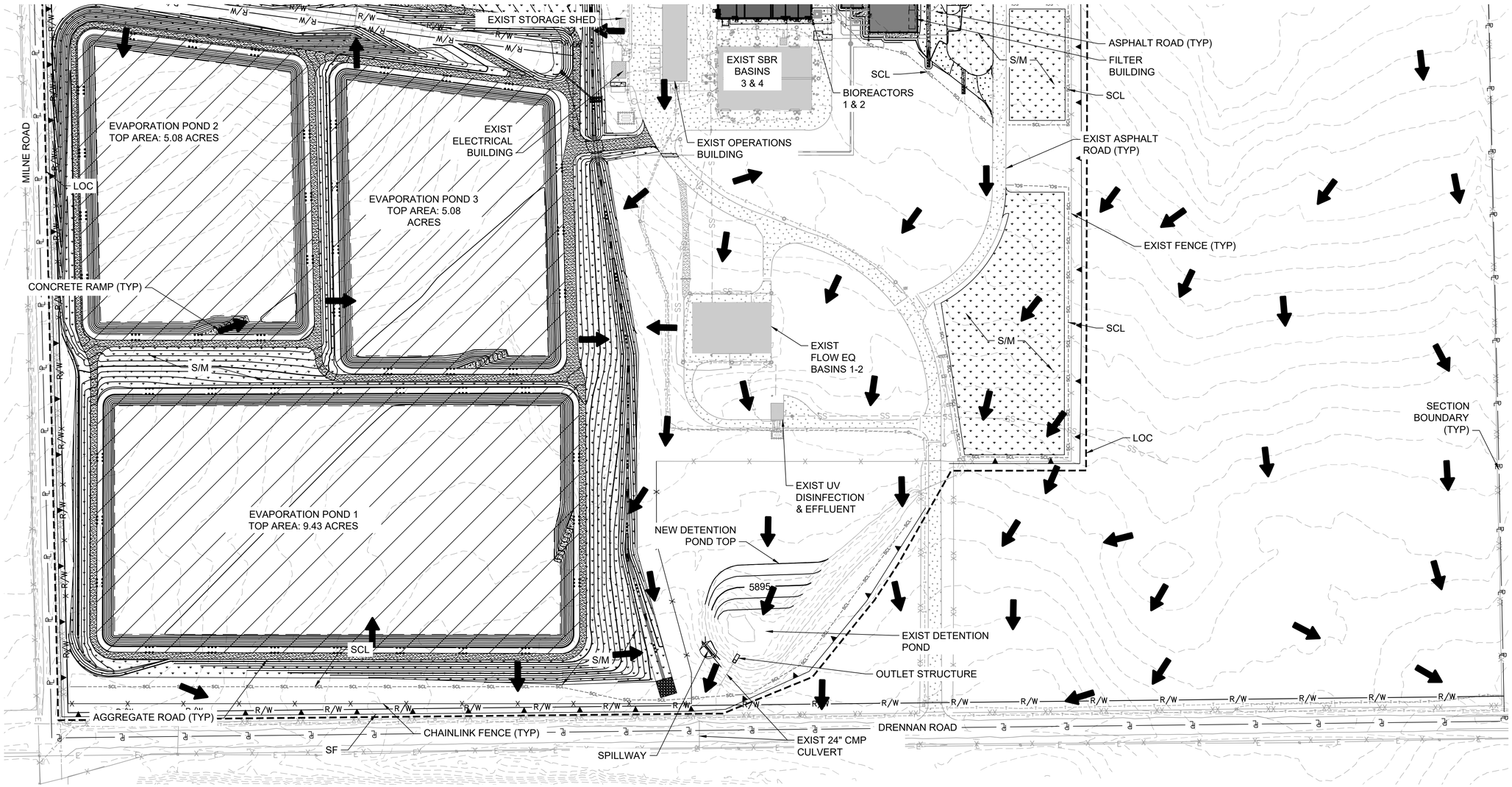

NOTES:

1. DESIGN/BUILDER MAY CHOOSE TO USE ROCK SOCKS OR SEDIMENT CONTROL LOGS ON NATURAL GRASS AREA, WHERE INDICATED.
2. SEDIMENT CONTROL LOGS SHALL NOT BE USED ON PAVED, GRAVEL, OR RIPRAP SURFACES.
3. ALL DISTURBED EARTHEN AREAS TO BE SEEDED AND MULCHED WITH A NATIVE SEED MIX
4. THE SITE IS LOCATED IN FEMA ZONE X "AREA OF MINIMAL FLOOD HAZARD."
5. THERE IS NO NOTABLE EXISTING VEGETATION ON SITE. ALL EXISTING VEGETATION IS GRASSES/WEEDS.
6. THIS PACKAGE WAS PREPARED UTILIZING THE GEOTECHNICAL RECOMMENDATIONS OUTLINED IN "GEOTECHNICAL ENGINEERING STUDY" FOR PROJECT NO. 20-2-126, PREPARED BY KUMAR & ASSOCIATES, INC. [REVISED 05/27/20]. SEE DOCUMENT FOR ADDITIONAL INFORMATION .

NORTH

FINAL EROSION & SEDIMENT CONTROL PLAN II

0 100' 200'
SCALE IN FEET

LEGEND:

- SILT FENCE (SF) — 1 / CG502
- CONSTRUCTION BOUNDARY/LIMITS OF DISTURBANCE
- CHAIN LINK FENCE
- SEEDING & MULCHING (S/M) — 1 / CG504, 2 / CG504
- EVAPORATION POND LINER
- BARB WIRE FENCE
- FLOW DIRECTION
- ROCK CHECK DAM (CD) — 1 / CG501

PCD FILING NO: PPR-20-044

no.	date	by	ckd	description
0	12/11/20	MJL	NT	REISSUED FOR EL PASO COUNTY PERMIT REVIEW

BURNS McDONNELL
9785 Maroon Cir., Suite 400
Centennial, CO 80112
303-721-9292

date	detailed
DECEMBER 2020	M. LIESENDAHL
designed	**checked**
M. LIESENDAHL	N. TESSITORE

CHEROKEE METROPOLITAN DISTRICT

CHEROKEE METROPOLITAN DISTRICT
TDS REDUCTION FACILITY
FINAL EROSION & SEDIMENT CONTROL PLAN II

project	contract
119461	

drawing **CE108** – rev. **0**

sheet 37 of sheets

file 119461_CE108.DWG

NICHOLAS TESSITORE 41295 12/11/2020 PROFESSIONAL ENGINEER

Z:\CLIENTS\WTR\CHEROKEEMETR\119461_TDSREDUCE\DESIGN\CADD\CIVIL\PROD_DWGS\119461_CE108.DWG 12/11/2020 2:04 PM MJLIESENDAHL

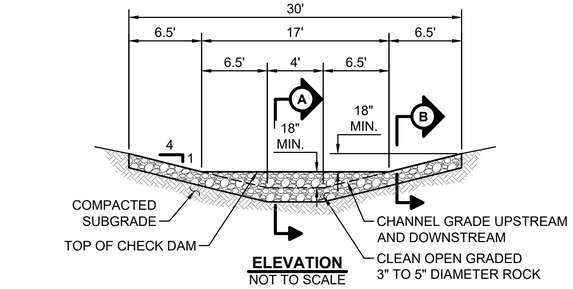

ELEVATION
NOT TO SCALE

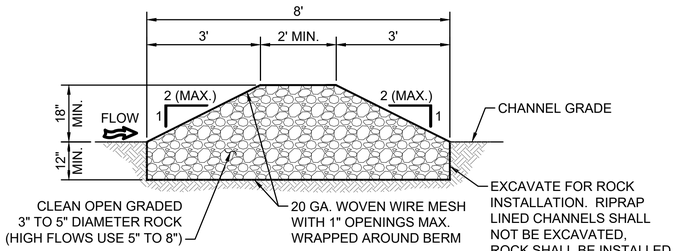

A SECTION
NOT TO SCALE

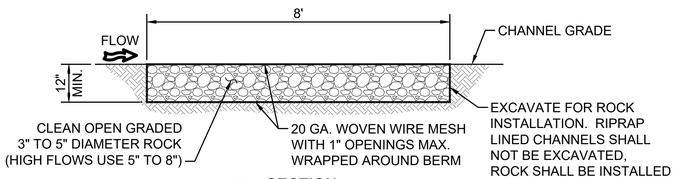

B SECTION
NOT TO SCALE

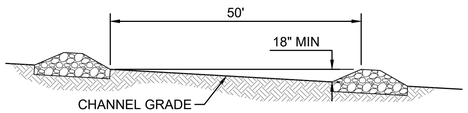

PROFILE
NOT TO SCALE

INSTALLATION NOTES:

1. SEE SEDIMENT AND EROSION CONTROL PLAN FOR GENERAL LOCATION OF CHECK DAMS. DESIGN/BUILDER MAY MODIFY LOCATIONS AND QUANTITIES WITH APPROVAL FROM ENGINEER AND/OR OWNER.
2. CHECK DAMS SHALL BE INSTALLED PRIOR TO ANY LAND DISTURBING ACTIVITIES IN THE CHANNELS THAT WILL NOT BE DISTURBED. DAMS LOCATED IN NEW CHANNELS THAT WILL BE GRADED SHALL BE INSTALLED AS SOON AS POSSIBLE AFTER CHANNEL GRADING HAS BEEN COMPLETED.
3. CHECK DAM AGGREGATE SHALL CONSIST OF 3" TO 5" DIAMETER ROCK (5" TO 8" FOR HIGH FLOW AREAS). CHECK DAM BERM STRUCTURE SHALL BE SECURED WITH A WOVEN WIRE SHEATHING HAVING A MAXIMUM OPENING OF 1 INCH AND A MINIMUM WIRE DIAMETER OF 20 GAGE GALVANIZED SECURED WITH SHOAT RINGS. WIRE SHALL BE INSTALLED PERPENDICULAR TO THE FLOW LINE, AND WRAPPED AROUND ROCK BERM AND TIED WITH TIE WIRE TO RETAIN THE BERMS SHAPE.
4. CHECK DAM SHALL BE TRENCHED INTO THE GROUND A MINIMUM OF 12 INCHES. CHECK DAMS THAT ARE INSTALLED ON RIPRAP LINED CHANNELS SHALL NOT BE EXCAVATED 12 INCHES. WOVEN WIRE SHALL BE PLACED ON OVER THE RIPRAP PRIOR TO CHECK DAM ROCK PLACEMENT TO SEPARATE THE CHECK DAM ROCK FROM THE RIPRAP.

MAINTENANCE NOTES:

1. THE DESIGN/BUILDER SHALL INSPECT THE REINFORCED CHECK DAMS WEEKLY AND MAINTAIN THEM IN AN EFFECTIVE CONDITION. THEY SHALL ALSO BE INSPECTED WITHIN 24 HOURS AFTER A STORM EVENT AND REPAIRS SHOULD BE COMPLETED AS NEEDED.
2. SEDIMENT ACCUMULATED UPSTREAM OF REINFORCED CHECK DAMS SHALL BE REMOVED WHEN THE UPSTREAM SEDIMENT DEPTH IS WITHIN 1/2 THE HEIGHT OF THE CREST OF THE DAM.
3. CHECK DAMS THAT ARE SHOWN IN RIPRAP LINED DRAINAGE CHANNELS SHALL BE INSTALLED AFTER RIPRAP IS INSTALLED. IF RIPRAP IS NOT INSTALLED DURING CHANNEL CONSTRUCTION, THE CHECK DAMS SHALL BE TEMPORARILY INSTALLED UNTIL COMMENCING THE RIPRAP INSTALLATION.
4. REINFORCED CHECK DAMS SHALL BE REMOVED AT THE END OF CONSTRUCTION. AFTER REMOVAL OF THE DAMS THE EXCAVATION SHALL BE FILLED AND THE DISTURBED AREA SHALL BE TOP-SOILED, SEEDED AND MULCHED.

ROCK CHECK DAM DETAIL (CD) — 1 / CG501
NOT TO SCALE

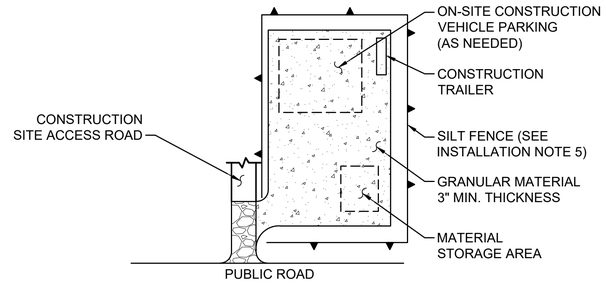

PLAN
NOT TO SCALE

INSTALLATION NOTES:

1. SEE SEDIMENT AND EROSION CONTROL PLAN FOR GENERAL LOCATION OF STAGING AREA. DESIGN/BUILDER MAY MODIFY LOCATION AND SIZE OF STABILIZED STAGING AREA WITH APPROVAL FROM ENGINEER AND/OR OWNER.
2. STABILIZED STAGING AREA SHALL BE SIZED APPROPRIATELY TO FULLY CONTAIN PARKING, STORAGE, AND UNLOADING AND LOADING OPERATIONS.
3. STAGING AREA SHALL BE STABILIZED PRIOR TO ANY OTHER OPERATIONS ON THE SITE.
4. THE STABILIZED STAGING AREA SHALL CONSIST OF 2-4" DIAMETER AGGREGATE A MINIMUM OF 3 INCHES THICK.
5. STAGING AREA SHALL BE CONTAINED WITHIN THE SITE'S PERIMETER BMPS, OR HAVE ADDITIONAL PERIMETER BMPS (SILT FENCE) INSTALLED AROUND STAGING AREA.

MAINTENANCE NOTES:

1. THE DESIGN/BUILDER SHALL INSPECT THE STABILIZED STAGING AREA WEEKLY AND MAINTAIN IT IN AN EFFECTIVE CONDITION. IT SHALL ALSO BE INSPECTED WITHIN 24 HOURS AFTER A STORM EVENT AND REPAIRS OR CLEAN OUT OF UPSTREAM SEDIMENT SHOULD BE COMPLETED AS NEEDED.
2. THE DESIGN/BUILDER SHALL PROVIDE ADDITIONAL THICKNESS OF AGGREGATE MATERIAL IF ANY RUTTING OCCURS OR UNDERLYING SUBGRADE BECOMES EXPOSED.
3. STABILIZED STAGING AREA SHALL BE ENLARGED IF NECESSARY TO CONTAIN PARKING, STORAGE, AND UNLOADING AND LOADING OPERATIONS.
4. ANY ACCUMULATED DIRT OR MUD SHALL BE REMOVED FROM THE SURFACE OF THE STABILIZED STAGING AREA.
5. THE STABILIZED STAGING AREA SHALL BE REMOVED AT THE END OF CONSTRUCTION. THE GRANULAR MATERIAL SHALL BE REMOVED AND THE AREA TOPSOILED, SEEDED AND MULCHED.

STABILIZED STAGING AREA DETAIL (SSA) — 2 / CG501
NOT TO SCALE

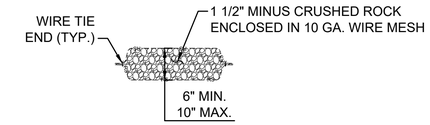

PLAN
NOT TO SCALE

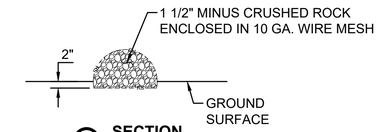

A SECTION
NOT TO SCALE

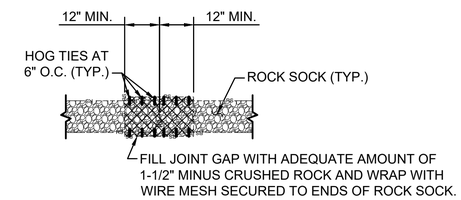

B LAPPED JOINT DETAIL
NOT TO SCALE

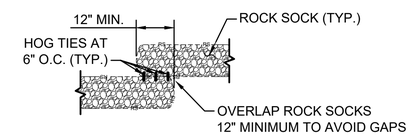

C OVERLAP JOINT DETAIL
NOT TO SCALE

INSTALLATION NOTES:

1. SEE SEDIMENT AND EROSION CONTROL PLAN FOR GENERAL LOCATION OF ROCK SOCKS. DESIGN/BUILDER MAY MODIFY LOCATIONS WITH APPROVAL FROM ENGINEER AND/OR OWNER.
2. CRUSHED ROCK SHALL BE 1-1/2" MINUS IN SIZE WITH A FRACTURED FACE ON ALL SIDES AND SHALL CONFORM TO THE GRADION IN TABLE A.
3. WIRE MESH SHALL BE FABRICATED OF 10 GAGE POULTRY MESH, OR EQUIVALENT, WITH A MAXIMUM OPENING OF 1/2".
4. WIRE MESH SHALL BE SECURED USING "HOG RINGS" OR WIRE TIES AT 6" CENTERS ALONG ALL JOINTS AND AT 2" CENTERS AT ENDS OF SOCKS.

MAINTENANCE NOTES:

1. THE DESIGN/BUILDER SHALL INSPECT THE ROCK SOCKS WEEKLY AND MAINTAIN THEM IN AN EFFECTIVE CONDITION. THEY SHALL ALSO BE INSPECTED WITHIN 24 HOURS AFTER A STORM EVENT AND REPAIRS SHOULD BE COMPLETED AS NEEDED.
2. SEDIMENT ACCUMULATED UPSTREAM OF ROCK SOCK SHALL BE REMOVED WHEN THE UPSTREAM SEDIMENT DEPTH IS WITHIN 1/2 THE HEIGHT OF THE ROCK SOCK.
3. ROCK SOCKS SHALL REMAIN IN PLACE UNTIL THE UPSTREAM DISTURBED AREA IS STABILIZED.
4. ONCE CONSTRUCTION AND FINAL STABILIZATION IS COMPLETE THE ROCK SOCKS SHALL BE REMOVED. AFTER REMOVAL THE DISTURBED AREAS SHALL BE TOP-SOILED, SEEDED AND MULCHED.

GRADATION TABLE A

SIEVE SIZE	PERCENT PASSING
2"	100
1-1/2"	90 - 100
1"	20 - 55
3/4"	0 - 15
3/8"	0 - 5

ROCK SOCK DETAIL (RS) — 3 / CG501
NOT TO SCALE

PCD FILING NO: PPR-20-044

no.	date	by	ckd	description
0	11/13/20	MJL	NT	ISSUED FOR EL PASO COUNTY PERMIT REVIEW
1	12/11/20	MJL	NT	REISSUED FOR EL PASO COUNTY PERMIT REVIEW

BURNS McDONNELL
9785 Maroon Cir., Suite 400
Centennial, CO 80112
303-721-9292

date	detailed
DECEMBER 2020	M. LIESENDAHL
designed	**checked**
M. LIESENDAHL	N. TESSITORE

CHEROKEE METROPOLITAN DISTRICT

CHEROKEE METROPOLITAN DISTRICT
TDS REDUCTION FACILITY
GRADING & EROSION CONTROL DETAILS I

project	contract
119461	

drawing **CG501** — rev. **1**
sheet 38 of sheets
file 119461_CG501.DWG

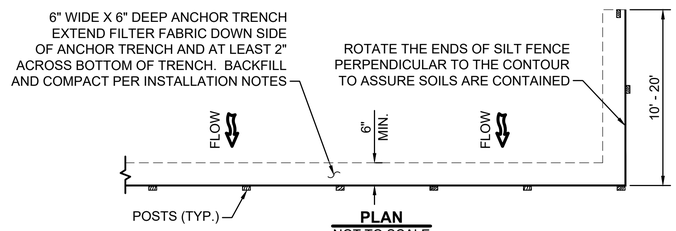

PLAN
NOT TO SCALE

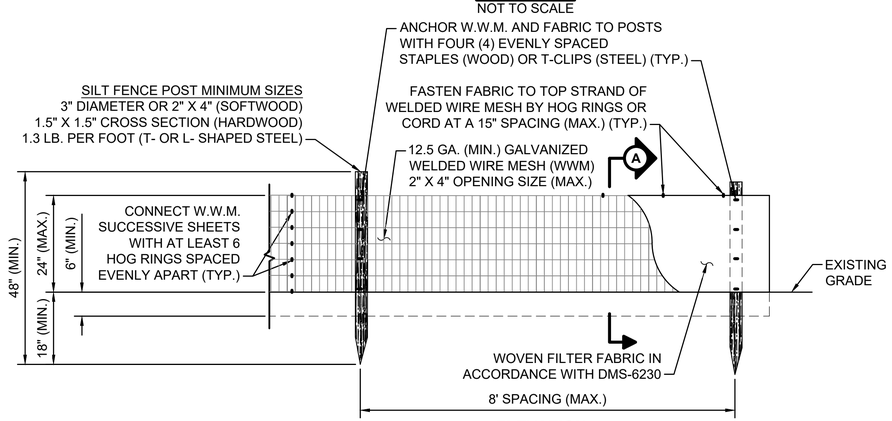

ELEVATION
NOT TO SCALE

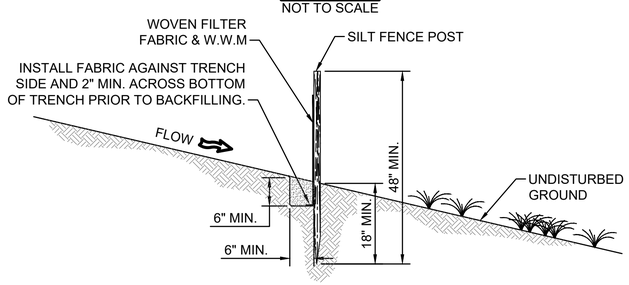

A **SECTION**
NOT TO SCALE

INSTALLATION NOTES:

1. SEE SEDIMENT AND EROSION CONTROL PLAN FOR GENERAL LOCATION OF SILT FENCE. CONTRACTOR MAY MODIFY LOCATIONS AND QUANTITIES WITH APPROVAL FROM ENGINEER AND/OR OWNER.
2. SILT FENCE SHALL BE INSTALLED PRIOR TO BEGINNING ANY LAND DISTURBING ACTIVITIES.
3. SILT FENCE SHALL BE PLACED AWAY FROM THE TOE OF A SLOPE TO ALLOW FOR WATER PONDING. IT SHALL BE INSTALLED AT LEAST 5 FEET BEYOND THE LIMITS OF GRADING.
4. ANCHOR TRENCH SHALL BE EXCAVATED USING A TRENCHER OR SILT FENCE INSTALLATION DEVICE. GRADERS, BACKHOES OR OTHER SIMILAR EQUIPMENT SHALL NOT BE USED FOR INSTALLATION.
5. COMPACTION OF THE ANCHOR TRENCH BACKFILL SHALL BE COMPLETED BY HAND WITH A "JUMPING JACK" OR BY WHEEL ROLLING. THE COMPACTION EFFORT SHALL BE SUFFICIENT TO PREVENT THE SILT FENCE FROM BEING PULLED OUT BY HAND.
6. WIRE MESH AND FABRIC SHALL BE PULLED TIGHT AS IT IS ANCHORED TO THE POSTS, THERE SHALL BE NO NOTICEABLE SAG BETWEEN POSTS AFTER INSTALLATION.
7. STAPLES USED TO ANCHOR MESH AND FABRIC TO POSTS SHALL BE 3/4" HEAVY DUTY STAPLES WITH 1/2" LEGS MINIMUM.
8. SILT FENCE SHALL BE INSTALLED AS CLOSE TO ON THE CONTOUR AS POSSIBLE. AT THE END OF A RUN OF SILT FENCE IT SHALL BE TURNED PERPENDICULAR TO THE CONTOUR TO CREATE A J-HOOK. THE EXTENSION OF THE PERPENDICULAR SECTION SHOULD BE A SUFFICIENT LENGTH TO PREVENT RUNOFF FROM FLOWING AROUND THE END OF THE SILT FENCE.

MAINTENANCE NOTES:

1. THE CONTRACTOR SHALL INSPECT SILT FENCE WEEKLY AND MAINTAIN IT IN AN EFFECTIVE CONDITION. IT SHALL ALSO BE INSPECTED WITHIN 24 HOURS AFTER A STORM EVENT AND REPAIRS SHOULD BE COMPLETED AS NEEDED.
2. SEDIMENT ACCUMULATED UPSTREAM OF SILT FENCE SHALL BE REMOVED WHEN THE UPSTREAM SEDIMENT DEPTH IS GREATER THAN 6 INCHES.
3. REPAIR OR REPLACE SILT FENCE WHEN THERE ARE SIGNS OF WEAR, SUCH AS SAGGING, TEARING OR COLLAPSE.
4. SILT FENCE SHALL REMAIN IN PLACE UNTIL UPSTREAM DISTURBED AREA HAS BEEN STABILIZED OR IT IS REPLACED BY ANOTHER EQUIVALENT PERIMETER SEDIMENT CONTROL BMP.
5. SILT FENCE SHALL BE REMOVED AT THE END OF CONSTRUCTION. AFTER REMOVAL OF THE THE FABRIC, WIRE MESH AND POSTS THE DISTURBED AREAS SHALL BE TOP-SOILED, SEEDED AND MULCHED.

SILT FENCE DETAIL (SF) — 1 / CG502
NOT TO SCALE

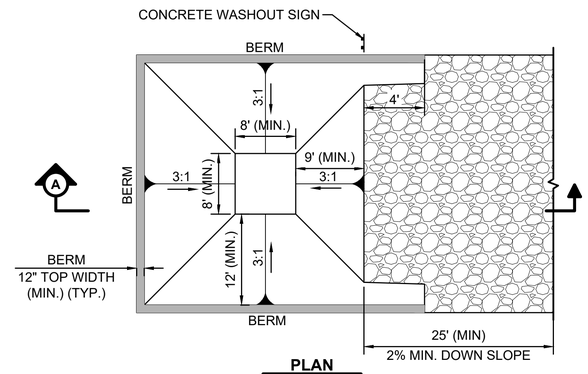

PLAN
NOT TO SCALE

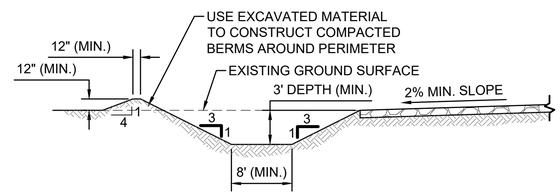

A **SECTION**
NOT TO SCALE

INSTALLATION NOTES:

1. SEE SEDIMENT AND EROSION CONTROL PLAN FOR LOCATION OF CONCRETE WASHOUT AREA.
2. THE CONCRETE WASHOUT AREA SHALL BE INSTALLED PRIOR TO ANY CONCRETE PLACEMENT ON SITE.
3. VEHICLE TRACKING CONTROL IS REQUIRED AT THE ACCESS POINT.
4. SIGNS SHALL BE PLACED AT THE CONSTRUCTION ENTRANCE, AT THE WASHOUT AREA, AND ELSEWHERE AS NECESSARY TO CLEARLY INDICATE THE LOCATION OF THE CONCRETE WASHOUT AREA TO OPERATORS OF CONCRETE TRUCKS AND PUMP RIGS.
5. EXCAVATION MATERIAL SHALL BE UTILIZED IN PERIMETER BERM CONSTRUCTION.

MAINTENANCE NOTES:

1. THE CONCRETE WASHOUT AREA SHALL BE REPAIRED, ENLARGED OR CLEANED OUT AS NECESSARY TO MAINTAIN CAPACITY FOR WASTED CONCRETE. CONCRETE WASTE MATERIALS SHALL BE REMOVED ONCE THE MATERIALS HAVE REACHED A DEPTH OF 2'.
2. THE CONTRACTOR SHALL INSPECT THE CONCRETE WASHOUT AREA WEEKLY AND MAINTAIN IT IN AN EFFECTIVE CONDITION. IT SHALL ALSO BE INSPECTED WITHIN 24 HOURS AFTER A STORM EVENT AND REPAIRS OR CLEAN OUT OF SEDIMENT SHOULD BE COMPLETED AS NEEDED.
3. THE CONCRETE WASHOUT AREA SHALL REMAIN IN PLACE UNTIL ALL CONCRETE FOR THE PROJECT IS PLACED.
4. THE CONCRETE WASHOUT AREA SHALL BE REMOVED AT THE END OF CONSTRUCTION. THE CONCRETE WASTE SHALL BE REMOVED AND DISPOSED OF IN ACCORDANCE WITH ALL LOCAL, STATE AND FEDERAL REGULATIONS. AFTER REMOVAL OF THE WASTE MATERIAL THE AREA SHALL BE GRADED SMOOTH, TOPSOILED, SEEDED AND MULCHED.

CONCRETE WASHOUT AREA DETAIL (CWA) — 2 / CG502
NOT TO SCALE

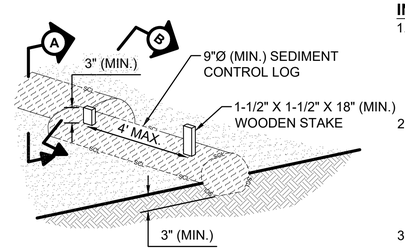

PERSPECTIVE VIEW
NOT TO SCALE

INSTALLATION NOTES:

1. SEE SEDIMENT AND EROSION CONTROL PLAN FOR GENERAL LOCATION OF SEDIMENT CONTROL LOGS. CONTRACTOR MAY MODIFY LOCATIONS AND QUANTITIES WITH APPROVAL FROM ENGINEER AND/OR OWNER.
2. SEDIMENT CONTROL LOGS SHALL BE INSTALLED PRIOR TO ANY LAND DISTURBING ACTIVITIES IN THE LOCATIONS THAT WILL NOT BE DISTURBED. LOGS LOCATED IN AREAS THAT WILL BE GRADED SHALL BE INSTALLED AS SOON AS POSSIBLE AFTER GRADING HAS BEEN COMPLETED.
3. SEDIMENT CONTROL LOGS SHOULD BE AVOIDED IN CONCENTRATED HIGH FLOW AREAS.
4. SEDIMENT CONTROL LOGS SHALL BE TRENCHED INTO THE GROUND A MINIMUM OF 3 INCHES.

MAINTENANCE NOTES:

1. THE CONTRACTOR SHALL INSPECT THE SEDIMENT CONTROL LOGS WEEKLY AND MAINTAIN THEM IN AN EFFECTIVE CONDITION. THEY SHALL ALSO BE INSPECTED WITHIN 24 HOURS AFTER A STORM EVENT AND REPAIRS SHOULD BE COMPLETED AS NEEDED.
2. SEDIMENT ACCUMULATED UPSTREAM OF SEDIMENT CONTROL LOGS SHALL BE REMOVED WHEN THE UPSTREAM SEDIMENT DEPTH IS WITHIN 1/2 THE HEIGHT OF THE CREST OF THE LOG.
3. SEDIMENT CONTROL LOGS THAT ARE SHOWN IN RIPRAP LINED DRAINAGE CHANNELS DO NOT NEED TO BE INSTALLED IF RIPRAP IS INSTALLED DURING CHANNEL CONSTRUCTION. IF RIPRAP IS NOT INSTALLED DURING CHANNEL CONSTRUCTION, THE SEDIMENT CONTROL LOGS SHALL BE TEMPORARILY INSTALLED UNTIL COMMENCING THE RIPRAP INSTALLATION.
4. SEDIMENT CONTROL LOGS SHALL BE REMOVED AT THE END OF CONSTRUCTION. AFTER REMOVAL OF THE LOGS THE DISTURBED AREAS SHALL BE TOPSOILED, SEEDED AND MULCHED.

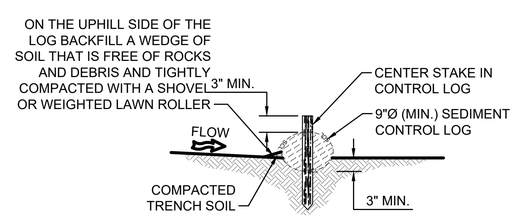

A **SECTION**
NOT TO SCALE

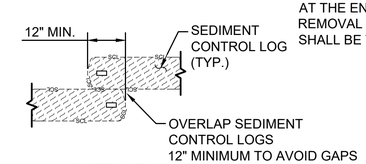

B **OVERLAP JOINT DETAIL**
NOT TO SCALE

SEDIMENT CONTROL LOG DETAIL (SCL) — 3 / CG502
NOT TO SCALE

PCD FILING NO: PPR-20-044

no.	date	by	ckd	description
0	11/13/20	MJL	NT	ISSUED FOR EL PASO COUNTY PERMIT REVIEW
1	12/11/20	MJL	NT	REISSUED FOR EL PASO COUNTY PERMIT REVIEW

BURNS McDONNELL
9785 Maroon Cir., Suite 400
Centennial, CO 80112
303-721-9292

date	detailed
DECEMBER 2020	M. LIESENDAHL
designed	**checked**
M. LIESENDAHL	N. TESSITORE

CHEROKEE METROPOLITAN DISTRICT
TDS REDUCTION FACILITY
GRADING & EROSION CONTROL DETAILS II

project	contract
119461	

drawing **CG502** – rev. **1**
sheet 39 of sheets
file 119461_CG502.DWG

FODS TRACKOUT CONTROL SYSTEM INSTALLATION

THE PURPOSE AND DESIGN OF THE FODS TRACKOUT CONTROL SYSTEM IS TO EFFECTIVELY REMOVE MOST SEDIMENT FROM VEHICLE TIRES AS THEY EXIT A DISTURBED LAND AREA ONTO A PAVED STREET. THIS MANUAL IS A PLATFORM FROM WHICH TO INSTALL A FODS TRACKOUT CONTROL SYSTEM. (NOTE: THIS IS NOT A ONE SIZE FITS ALL GUIDE.) THE INSTALLATION MAY NEED TO BE MODIFIED TO MEET THE EXISTING CONDITIONS, EXPECTATIONS, OR DEMANDS OF A PARTICULAR SITE. THIS IS A GUIDELINE. ULTIMATELY THE FODS TRACKOUT CONTROL SYSTEM SHOULD BE INSTALLED SAFELY WITH PROPER ANCHORING AND SIGNS PLACED AT THE ENTRANCE AND EXIT TO CAUTION USERS AND OTHERS.

KEY NOTES:

A. FODS TRACKOUT CONTROL SYSTEM MAT.
B. FODS SAFETY SIGN.
C. ANCHOR POINT.
D. SILT OR ORANGE CONSTRUCTION FENCE.

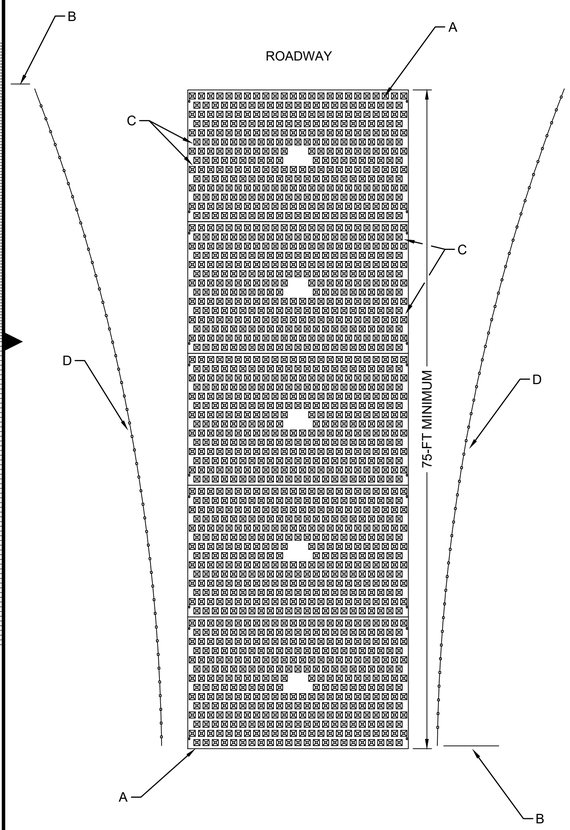

TYPICAL ONE-LANE LAYOUT

INSTALLATION:

1. THE SITE WHERE THE FODS TRACKOUT CONTROL SYSTEM IS TO BE PLACED SHOULD CORRESPOND TO BEST MANAGEMENT PRACTICES AS MUCH AS POSSIBLE. THE SITE WHERE FODS TRACKOUT CONTROL SYSTEM IS PLACED SHOULD ALSO MEET OR EXCEED THE LOCAL JURISDICTION OR STORM WATER POLLUTION PREVENTION PLAN (SWPPP) REQUIREMENTS.
2. CALL FOR UTILITY LOCATES 3 BUSINESS DAYS IN ADVANCE OF THE OF FODS TRACKOUT CONTROL SYSTEM INSTALLATION FOR THE MARKING OF UNDERGROUND UTILITIES. CALL THE UTILITY NOTIFICATION CENTER AT 811.
3. ONCE THE SITE IS ESTABLISHED WHERE FODS TRACKOUT CONTROL SYSTEM IS TO BE PLACED, ANY EXCESSIVE UNEVEN TERRAIN SHOULD BE LEVELED OUT OR REMOVED SUCH AS LARGE ROCKS, LANDSCAPING MATERIALS, OR SUDDEN ABRUPT CHANGES IN ELEVATION.
4. THE INDIVIDUAL MATS CAN START TO BE PLACED INTO POSITION. THE FIRST MAT SHOULD BE PLACED NEXT TO THE CLOSEST POINT OF EGRESS. THIS WILL ENSURE THAT THE VEHICLE WILL EXIT STRAIGHT FROM THE SITE ONTO THE PAVED SURFACE.
8. AFTER THE FIRST MAT IS PLACED DOWN IN THE PROPER LOCATION, MATS SHOULD BE ANCHORED TO PREVENT THE POTENTIAL MOVEMENT WHILE THE ADJOINING MATS ARE INSTALLED. ANCHORS SHOULD BE PLACED AT EVERY ANCHOR POINT (IF FEASIBLE) TO HELP MAINTAIN THE MAT IN ITS CURRENT POSITION.
9. AFTER THE FIRST MAT IS ANCHORED IN ITS PROPER PLACE, AN H BRACKET SHOULD BE PLACED AT THE END OF THE FIRST MAT BEFORE ANOTHER MAT IS PLACED ADJACENT TO THE FIRST MAT.
10. ONCE THE SECOND MAT IS PLACED ADJACENT TO THE FIRST MAT, MAKE SURE THE H BRACKET IS CORRECTLY SITUATED BETWEEN THE TWO MATS, AND SLIDE MATS TOGETHER.
11. NEXT THE CONNECTOR STRAPS SHOULD BE INSTALLED TO CONNECT THE TWO MATS TOGETHER.
12. UPON PLACEMENT OF EACH NEW MAT IN THE SYSTEM, THAT MAT SHOULD BE ANCHORED AT EVERY ANCHOR POINT TO HELP STABILIZE THE MAT AND ENSURE THE SYSTEM IS CONTINUOUS WITH NO GAPS IN BETWEEN THE MATS.
13. SUCCESSIVE MATS CAN THEN BE PLACED TO CREATE THE FODS TRACKOUT CONTROL SYSTEM REPEATING THE ABOVE STEPS.

USE AND MAINTENANCE

1. VEHICLES SHOULD TRAVEL DOWN THE LENGTH OF THE TRACKOUT CONTROL SYSTEM AND NOT CUT ACROSS THE MATS.
2. DRIVERS SHOULD TURN THE WHEEL OF THEIR VEHICLES SUCH THAT THE VEHICLE WILL MAKE A SHALLOW S-TURN ROUTE DOWN THE LENGTH OF THE FODS TRACKOUT CONTROL SYSTEM.
3. MATS SHOULD BE CLEANED ONCE THE VOIDS BETWEEN THE PYRAMIDS BECOME FULL OF SEDIMENT. TYPICALLY THIS WILL NEED TO BE PERFORMED WITHIN TWO WEEKS AFTER A STORM EVENT. BRUSHING IS THE PREFERRED METHOD OF CLEANING, EITHER MANUALLY OR MECHANICALLY.
4. THE USE OF ICE MELT, ROCK SALT, SNOW MELT, DE-ICER, ETC. SHOULD BE UTILIZED AS NECESSARY DURING THE WINTER MONTHS AND AFTER A SNOW EVENT TO PREVENT ICE BUILDUP.

REMOVAL

1. REMOVAL OF FODS TRACKOUT CONTROL SYSTEM IS REVERSE ORDER OF INSTALLATION.
2. STARTING WITH THE LAST MAT, THE MAT THAT IS PLACED AT THE INNERMOST POINT OF THE SITE OR THE MAT FURTHEST FROM THE EXIT OR PAVED SURFACE SHOULD BE REMOVED FIRST.
3. THE ANCHORS SHOULD BE REMOVED.
4. THE CONNECTOR STRAPS SHOULD BE UNBOLTED AT ALL LOCATIONS IN THE FODS TRACKOUT CONTROL SYSTEM.
5. STARTING WITH THE LAST MAT IN THE SYSTEM, EACH SUCCESSIVE MAT SHOULD THEN BE MOVED AND STACKED FOR LOADING BY FORKLIFT OR EXCAVATOR ONTO A TRUCK FOR REMOVAL FROM THE SITE.

FODS TRACKOUT CONTROL MAT SYSTEM OR APPROVED EQUAL (VTC)
NOT TO SCALE — 1 / CG503

Inlet Protection (IP) — SC-6

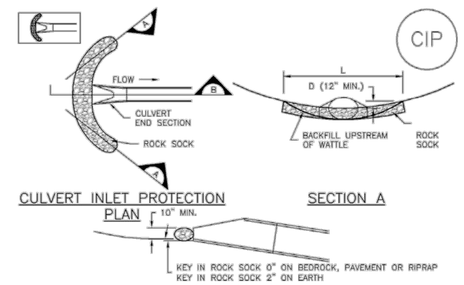

CIP–1. CULVERT INLET PROTECTION

CULVERT INLET PROTECTION INSTALLATION NOTES

1. SEE PLAN VIEW FOR
   –LOCATION OF CULVERT INLET PROTECTION.

2. SEE ROCK SOCK DESIGN DETAIL FOR ROCK GRADATION REQUIREMENTS AND JOINTING DETAIL.

CULVERT INLET PROTECTION MAINTENANCE NOTES

1. INSPECT BMPs EACH WORKDAY, AND MAINTAIN THEM IN EFFECTIVE OPERATING CONDITION. MAINTENANCE OF BMPs SHOULD BE PROACTIVE, NOT REACTIVE. INSPECT BMPs AS SOON AS POSSIBLE (AND ALWAYS WITHIN 24 HOURS) FOLLOWING A STORM THAT CAUSES SURFACE EROSION, AND PERFORM NECESSARY MAINTENANCE.

2. FREQUENT OBSERVATIONS AND MAINTENANCE ARE NECESSARY TO MAINTAIN BMPs IN EFFECTIVE OPERATING CONDITION. INSPECTIONS AND CORRECTIVE MEASURES SHOULD BE DOCUMENTED THOROUGHLY.

3. WHERE BMPs HAVE FAILED, REPAIR OR REPLACEMENT SHOULD BE INITIATED UPON DISCOVERY OF THE FAILURE.

4. SEDIMENT ACCUMULATED UPSTREAM OF THE CULVERT SHALL BE REMOVED WHEN THE SEDIMENT DEPTH IS ½ THE HEIGHT OF THE ROCK SOCK.

5. CULVERT INLET PROTECTION SHALL REMAIN IN PLACE UNTIL THE UPSTREAM DISTURBED AREA IS PERMANENTLY STABILIZED AND APPROVED BY THE LOCAL JURISDICTION.

(DETAILS ADAPTED FROM AURORA, COLORADO, NOT AVAILABLE IN AUTOCAD)

NOTE: MANY JURISDICTIONS HAVE BMP DETAILS THAT VARY FROM UDFCD STANDARD DETAILS. CONSULT WITH LOCAL JURISDICTIONS AS TO WHICH DETAIL SHOULD BE USED WHEN DIFFERENCES ARE NOTED.

August 2013 — Urban Drainage and Flood Control District, Urban Storm Drainage Criteria Manual Volume 3 — IP-7

CULVERT INLET PROTECTION
NOT TO SCALE — 2 / CG503

no.	date	by	ckd	description
0	11/13/20	MJL	NT	ISSUED FOR EL PASO COUNTY PERMIT REVIEW
1	12/11/20	MJL	NT	REISSUED FOR EL PASO COUNTY PERMIT REVIEW

BURNS McDONNELL
9785 Maroon Cir., Suite 400
Centennial, CO 80112
303-721-9292

date	detailed
DECEMBER 2020	M. LIESENDAHL
designed	**checked**
M. LIESENDAHL	N. TESSITORE

CHEROKEE METROPOLITAN DISTRICT

CHEROKEE METROPOLITAN DISTRICT
TDS REDUCTION FACILITY
GRADING & EROSION CONTROL DETAILS III

project	contract
119461	

drawing **CG503** — rev. **1**

sheet 40 of sheets

file 119461_CG503.DWG

PCD FILING NO: PPR-20-044

Z:\CLIENTS\WTR\CHEROKEEMETR\119461_TDSREDUCE\DESIGN\CADD\CIVIL\PROD_DWGS\119461_CG503.DWG 12/11/2020 2:28 PM MJLIESENDAHL

RECOMMENDED ANNUAL GRASSES

SPECIES (COMMON NAME)	GROWTH SEASON	SEEDING DATE	POUNDS OF PURE LIVE SEED (PLS) (PLS/ACRE)	PLANTING DEPTH (INCHES)
1. OATS	COOL	MARCH 16 - APRIL 30	35-50	1-2
2. SPRING WHEAT	COOL	MARCH 16 - APRIL 30	25-35	1-2
3. SPRING BARLEY	COOL	MARCH 16 - APRIL 30	25-35	1-2
4. ANNUAL RYEGRASS	COOL	MARCH 16 - JUNE 30	10-15	1/2
5. MILLET	WARM	MAY 16 - JULY 15	3-15	1/2-3/4
6. SUDANGRASS	WARM	MAY 16 - JULY 15	5-10	1/2-3/4
7. SORGHUM	WARM	MAY 16 - JULY 15	5-10	1/2-3/4
8. WINTER WHEAT	COOL	SEPTEMBER 1 - 30	20-35	1-2
9. WINTER BARLEY	COOL	SEPTEMBER 1 - 30	20-35	1-2
10. WINTER RYE	COOL	SEPTEMBER 1 - 30	20-35	1-2
11. TRITICALE	COOL	SEPTEMBER 1 - 30	25-40	1-2

THIS TABLE WAS TAKEN FROM UDFCD FOR RECOMMENDED ANNUAL GRASSES FOR THE DENVER METROPOLITAN AREA. THIS TABLE MAY BE USED UNLESS A SITE-SPECIFIC SEED MIX IS REQUESTED AND APPROVED.

TABLE TS-1

TEMPORARY SEEDING NOTES

INSTALLATION REQUIREMENTS

1. DISTURBED AREAS ARE TO BE SEEDED WITHIN 21 DAYS AFTER CONSTRUCTION ACTIVITY OR GRADING ENDS IF SEASON ALLOWS.

2. IF NECESSARY, SOIL IS TO BE CONDITIONED FOR PLANT GROWTH BY APPLYING TOPSOIL, FERTILIZER, OR LIME.

3. SOIL IS TO BE TILLED IMMEDIATELY PRIOR TO APPLYING SEEDS. COMPACT SOILS ESPECIALLY NEED TO BE LOOSENED.

4. SEEDBED DEPTH IS TO BE 4 INCHES FOR SLOPES FLATTER THAN 2:1, AND 1 INCH FOR SLOPES STEEPER THAN 2:1.

5. ANNUAL GRASSES LISTED IN TABLE TS-1 ARE TO BE USED FOR TEMPORARY SEEDING. SEED MIXES ARE NOT TO CONTAIN ANY NOXIOUS WEED SEEDS INCLUDING RUSSIAN OR CANADIAN THISTLE, KNAPWEED, PURPLE LOOSESTRIFE, EUROPEAN BINDWEED, JOHNSON GRASS, AND LEAFY SPURGE.

6. TABLE TS-1 ALSO PROVIDES REQUIREMENTS FOR SEEDING RATES, SEEDING DATES, AND PLANTING DEPTHS FOR THE APPROVED TYPES OF ANNUAL GRASSES.

7. SEEDING IS TO BE APPLIED USING MECHANICAL TYPE DRILLS EXCEPT WHERE SLOPES ARE STEEP OR ACCESS IS LIMITED THEN HYDRAULIC SEEDING MAY BE USED.

8. ALL SEEDED AREAS ARE TO BE MULCHED (SEE FACTSHEET ON MULCHING).

9. IF HYDRAULIC SEEDING IS USED THEN HYDRAULIC MULCHING SHALL BE DONE SEPARATELY TO AVOID SEEDS BECOMING ENCAPSULATED IN THE MULCH.

MAINTENANCE REQUIREMENTS

1. REGULAR INSPECTIONS ARE TO BE MADE OF ALL SEEDED AREAS TO ENSURE GROWTH.

2. AREAS WHERE GROWTH IS NOT OCCURRING QUICKLY OR THE MULCH HAS BEEN REMOVED SHALL BE RE-SEEDED AS SOON AS POSSIBLE AND RE-MULCHED IF NEEDED.

3. SEEDED AREAS ARE NOT TO BE DRIVEN OVER WITH CONSTRUCTION EQUIPMENT OR VEHICLES.

City of Colorado Springs
Stormwater Quality

Figure TS-1
Temporary Seeding
Construction Detail and Maintenance Requirements

TEMPORARY SEEDING 1 / CG504

MULCHING NOTES

INSTALLATION REQUIREMENTS

1. ALL DISTURBED AREAS MUST BE MULCHED WITHIN 21 DAYS AFTER FINAL GRADE AND SEEDED AREAS ARE TO BE MULCHED WITHIN 24 HOURS AFTER SEEDING.

2. MATERIAL USED FOR MULCH CAN BE CERTIFIED CLEAN, WEED- AND SEED-FREE LONG STEMMED FIELD OR MARSH HAY, OR STRAW OF OATS, BARLEY, WHEAT, RYE, OR TRITICALE CERTIFIED BY THE COLORADO DEPARTMENT OF AGRICULTURE WEED FREE FORAGE CERTIFICATION PROGIRAM.

3. HYDRAULIC MULCHING MATERIAL SHALL CONSIST OF VIRGIN WOOD FIBER MANUFACTURED FROM CLEAN WHOLE WOOD CHIPS. WOOD CHIPS CANNOT CONTAIN ANY GROWTH OR GERMINATION INHIBITORS OR BE PRODUCED FROM RECYCLED MATERIAL. GRAVEL CAN ALSO BE USED.

4. MULCH IS TO BE APPLIED EVENLY AT A RATE OF 2 TONS PER ACRE.

5. MULCH IS TO BE ANCHORED EITHER BY CRIMPING (TUCKING MULCH FIBERS 4 INCHES INTO THE SOIL), USING NETTING (USED ON SMALL AREAS WITH STEEP SLOPES), OR WITH A TACKIFIER.

6. HYDRAULIC MULCHING AND TACKIFIERS ARE NOT TO BE USED IN THE PRESENCE OF FREE SURFACE WATER.

MAINTENANCE REQUIREMENTS

1. REGULAR INSPECTIONS ARE TO BE MADE OF ALL MULCHED AREAS.

2. MULCH IS TO BE REPLACED IMMEDIATELY IN THOSE AREAS IT HAS BEEN REMOVED, AND IF NECESSARY THE AREA SHOULD BE RESEEDED.

City of Colorado Springs
Stormwater Quality

Figure MU-1
Mulching
Construction Detail and Maintenance Requirements

MULCHING 2 / CG504

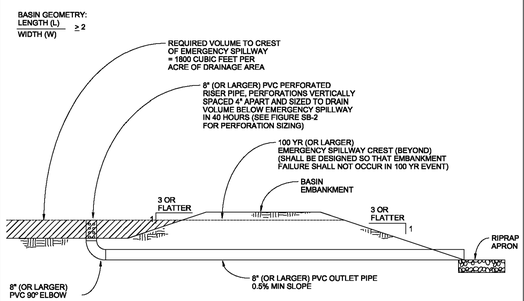

SEDIMENT BASIN

NTS

SEDMENT BASIN NOTES

INSTALLATION REQUIREMENTS

1. SEDIMENT BASINS SHALL BE INSTALLED BEFORE ANY CLEARING AND/OR GRADING IS UNDERTAKEN.

2. THE AREA UNDER WHICH THE EMBANKMENT IS TO BE INSTALLED SHALL BE CLEARED, GRUBBED, AND STRIPPED OF ALL VEGETATION AND ROOT MAT.

3. THE OUTLET OF THE BASIN SHALL BE DESIGNED TO DRAIN ITS VOLUME IN 40 HOURS.

4. THE OUTLET IS TO BE LOCATED AT THE FURTHEST DISTANCE FROM THE INLET OF THE BASIN. BAFFLES MAY BE NEEDED TO INCREASE THE FLOW LENGTH AND SETTLING TIME.

5. EMBANKMENT MATERIAL SHALL CONSIST OF SOIL WITH A MINIMUM OF 15% PASSING A #200 SIEVE. EXCAVATED SOIL CAN BE USED IF IT MEETS THIS REQUIREMENT.

6. EMBANKMENT IS TO BE COMPACTED TO AT LEAST 90% OF MAXIMUM DENSITY AND WITHIN 2% OF OPTIMUM MOISTURE CONTENT ACCORDING TO ASTM D 698.

7. WHEN A BASIN IS INSTALLED NEAR A RESIDENTIAL AREA, FOR SAFETY REASONS, A SIGN SHALL BE POSTED AND THE AREA SECURED WITH A FENCE.

MAINTENANCE REQUIREMENTS

1. CONTRACTOR SHALL INSPECT SEDIMENT BASINS AFTER EACH RAINFALL, AT LEAST DAILY DURING PROLONGED RAINFALL, AND WEEKLY DURING PERIODS NO RAINFALL.

2. SEDIMENT BASINS SHALL BE CLEANED OUT BEFORE SEDIMENT HAS FILLED HALF THE VOLUME OF THE BASIN.

3. SEDIMENT BASINS SHALL REMAIN OPERATIONAL AND PROPERLY MAINTAINED UNTIL THE SITE AREA IS PERMANENTLY STABILIZED WITH ADEQUATE VEGETATIVE COVER AND/OR OTHER PERMANENT STRUCTURE AS APPROVED BY THE CITY.

City of Colorado Springs
Stormwater Quality

Figure SB-1
Sediment Basin
Construction Detail and Maintenance Requirements

SEDIMENT BASIN 3 / CG504

Required Area per Row (in^2)

Design Volume (acre-ft)	Depth at Outlet (ft) 1.0	1.5	2.0	2.5	3.0	3.5	4.0	4.5
2	15.04	7.71	5.10	3.76	2.95	2.41	2.02	1.73
1	7.52	3.86	2.55	1.88	1.48	1.21	1.01	0.87
0.6	4.51	2.31	1.53	1.13	0.89	0.72	0.61	0.52
0.4	3.01	1.54	1.02	0.75	0.59	0.48	0.40	0.35
0.2	1.50	0.77	0.51	0.38	0.30	0.24	0.20	0.17
0.1	0.75	0.39	0.26	0.19	0.15	0.12	0.10	0.09
0.06	0.45	0.23	0.15	0.11	0.09	0.07	0.06	0.05
0.04	0.30	0.15	0.10	0.08	0.06	0.05	0.04	0.03
0.02	0.15	0.08	0.05	0.04	0.03	0.02	0.02	0.02
0.01	0.08	0.04	0.03	0.02	0.01	0.01	0.01	0.01

TABLE SB-1

Circular Perforation Sizing

Hole Diameter (in)	Hole Diameter (in)	Area per Row (in^2) n = 1	n = 2	n = 3
1/4	0.250	0.05	0.10	0.15
5/16	0.313	0.08	0.15	0.23
3/8	0.375	0.11	0.22	0.33
7/16	0.438	0.15	0.30	0.45
1/2	0.500	0.20	0.39	0.59
9/16	0.563	0.25	0.50	0.75
5/8	0.625	0.31	0.61	0.92
11/16	0.688	0.37	0.74	1.11
3/4	0.750	0.44	0.88	1.33
7/8	0.875	0.60	1.20	1.80
1	1.000	0.79	1.57	2.36
1 1/8	1.125	0.99	1.99	2.98
1 1/4	1.250	1.23	2.45	3.68
1 3/8	1.375	1.48	2.97	4.45
1 1/2	1.500	1.77	3.53	5.30
1 5/8	1.625	2.07	4.15	6.22
1 3/4	1.750	2.41	4.81	7.22
1 7/8	1.875	2.76	5.52	8.28
2	2.000	3.14	6.28	9.42
n = Number of columns of perforations				
Minimum steel plate thickness		1/4"	5/16"	3/8"

TABLE SB-2

City of Colorado Springs
Stormwater Quality

Figure SB-2
Outlet Sizing
Application Techniques and Maintenance Requirements

SEDIMENT BASIN OUTLET SIZING 4 / CG504

no.	date	by	ckd	description
0	12/11/20	MJL	NT	REISSUED FOR EL PASO COUNTY PERMIT REVIEW

BURNS McDONNELL
9785 Maroon Cir., Suite 400
Centennial, CO 80112
303-721-9292

date	detailed
DECEMBER 2020	M. LIESENDAHL
designed	**checked**
M. LIESENDAHL	----

CHEROKEE METROPOLITAN DISTRICT
TDS REDUCTION FACILITY
GRADING & EROSION CONTROL DETAILS IV

project	contract
119461	

drawing **CG504** – rev. **0**

sheet 41 of sheets

file 119461_CG504.DWG

PCD FILING NO: PPR-20-044

Z:\CLIENTS\WTR\CHEROKEEMETR\119461_TDSREDUCE\DESIGN\CADD\CIVIL\PROD_DWGS\119461_CG504.DWG 12/10/2020 6:02 PM GLALBANSODER

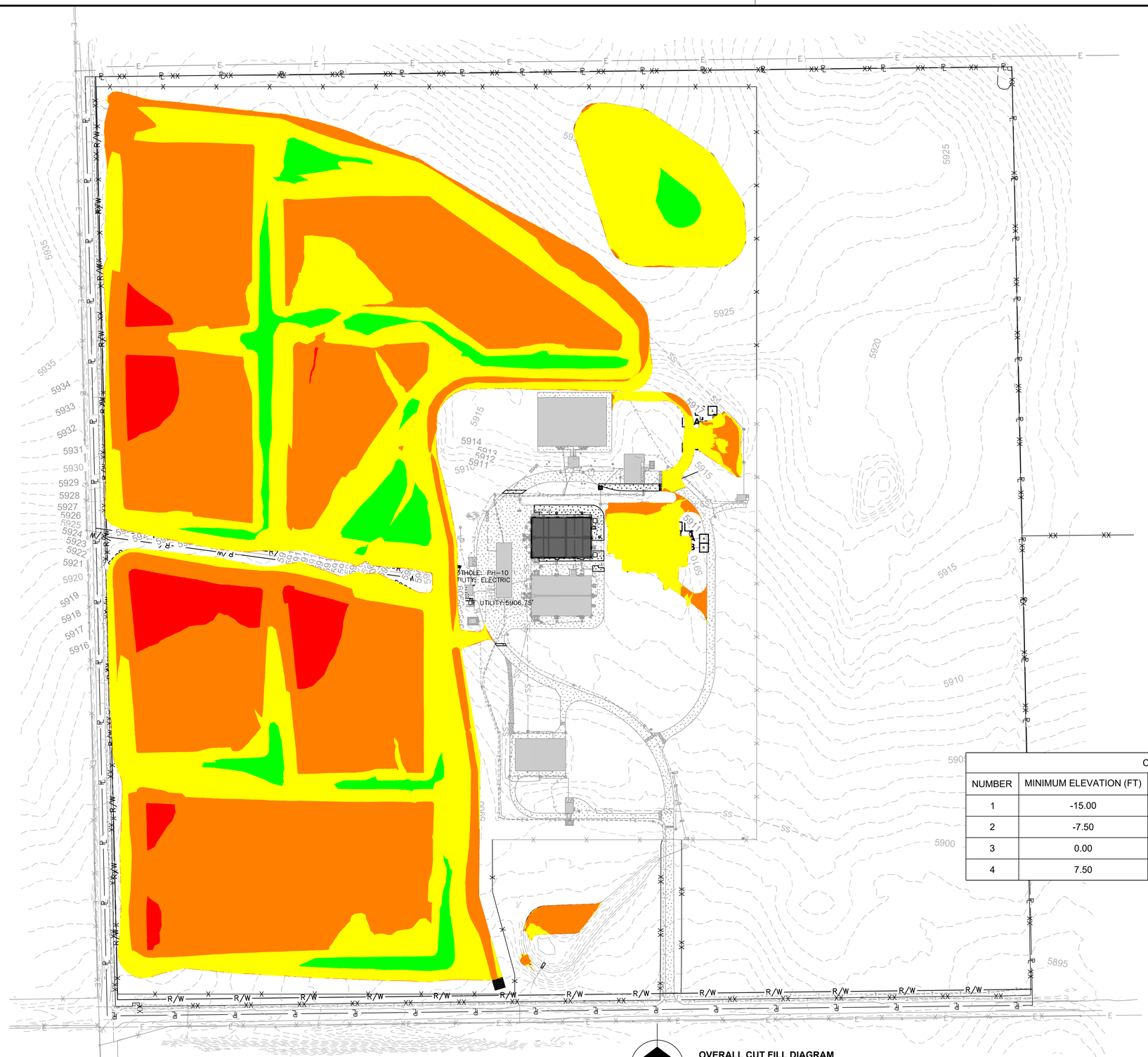

CUT FIILL LEGEND				
NUMBER	MINIMUM ELEVATION (FT)	MAXIMUM ELEVATION (FT)	COLOR	CUT OR FILL
1	-15.00	-7.50		CUT
2	-7.50	0.00		CUT
3	0.00	7.50		FILL
4	7.50	15.00		FILL

NORTH

OVERALL CUT FILL DIAGRAM

0 70' 140'
SCALE IN FEET

PCD FILING NO: PPR-20-044

no.	date	by	ckd	description
0	11/13/20	MJL	NT	ISSUED FOR EL PASO COUNTY PERMIT REVIEW
1	12/11/20	MJL	NT	REISSUED FOR EL PASO COUNTY PERMIT REVIEW

BURNS McDONNELL
9785 Maroon Cir., Suite 400
Centennial, CO 80112
303-721-9292

date DECEMBER 2020	detailed M. LIESENDAHL
designed M. LIESENDAHL	checked N. TESSITORE

CHEROKEE METROPOLITAN DISTRICT

CHEROKEE METROPOLITAN DISTRICT
TDS REDUCTION FACILITY
OVERALL CUT FILL DIAGRAM

project 119461	contract
drawing CG701	rev. 1
sheet 42 of	sheets
file 119461_CG701.DWG	

NICHOLAS TESSITORE 41295 12/11/2020 PROFESSIONAL ENGINEER

Z:\CLIENTS\WTR\CHEROKEEMETR\119461_TDSREDUCE\DESIGN\CADD\CIVIL\PROD_DWGS\119461_CG701.DWG 12/10/2020 11:19 PM GLALBANSODER

APPENDIX D - BMP DETAILS

Check Dam

What it is

Check dams are small, temporary or permanent dams constructed across a drainage ditch, swale or channel to reduce the velocity of concentrated flows and to trap sediment eroded from upstream. Check dams can be constructed out of rocks, gravel-filled sandbags or straw bales.

When and Where to use it

- In open channels that receive flow from drainage between 1 and 10 acres.
- In steeply sloped swales.
- In swales that need protection during the establishment of grasses or prior to installation of a non-erodible lining.

When and Where NOT to use it

- In live streams.
- In channels that receive flow from drainage areas greater than 10 acres.
- In channels that will be overtopped by flow once the dams are constructed.

Construction Detail and Maintenance Requirements

Figure CD-1 provides a construction detail and maintenance requirements for a check dam.

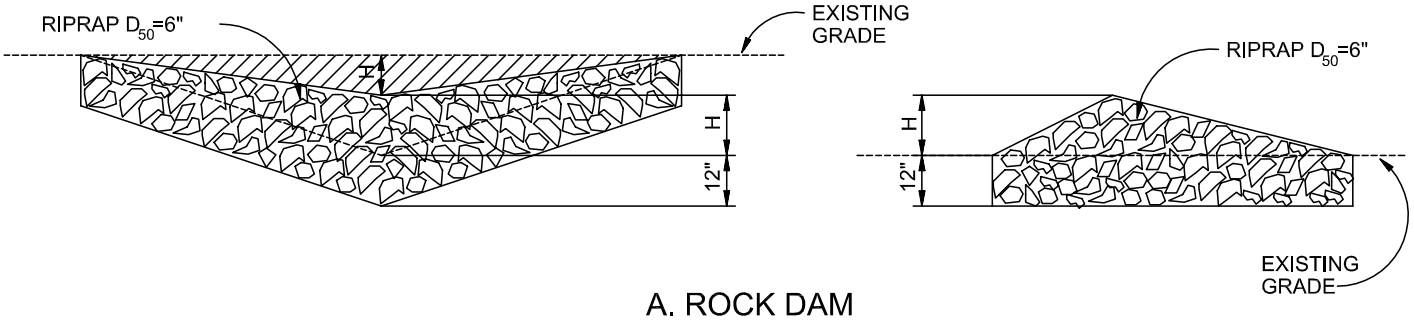

A. ROCK DAM

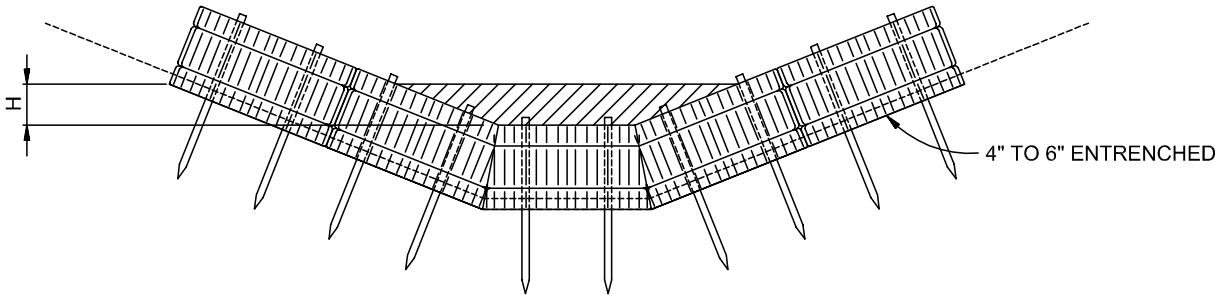

B. STRAW BALE CHECK DAM

(SEE STRAW BALE BARRIER INSTALATION)

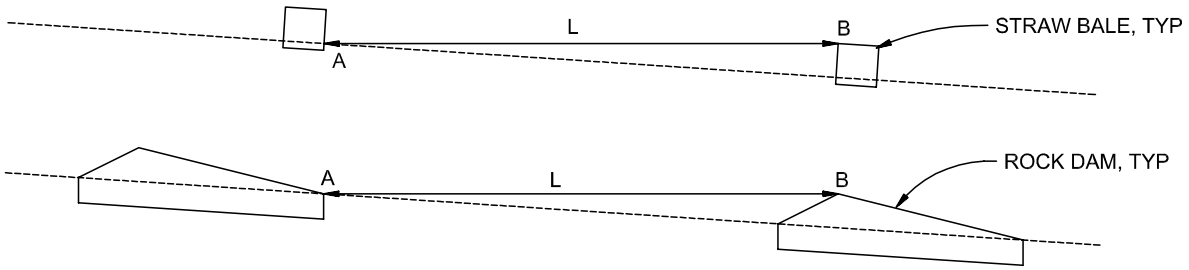

L= THE DISTANCE SUCH THAT POINTS A AND B ARE AT THE SAME ELEVATION.

C. SPACING CHECK DAMS

CHECK DAM

NTS

CHECK DAM NOTES

INSTALLATION REQUIREMENTS

1. STRAW BALES USED AS CHECK DAMS ARE TO MEET THE REQUIREMENTS STATED IN FIGURE SBB-2.

2. THE "H" DIMENSION SHALL BE SELECTED TO PROVIDE WEIR FLOW CONVEYANCE FOR 2-YEAR FLOW OR GREATER.

MAINTENANCE REQUIREMENTS

1. REGULAR INSPECTIONS ARE TO BE MADE OF ALL CHECK DAMS, ESPECIALLY AFTER STORM EVENTS.

2. REPLACE STONE AS NECESSARY TO MAINTAIN THE CORRECT HEIGHT OF THE DAM.

3. ACCUMULATED SEDIMENT AND DEBRIS IS TO BE REMOVED FROM BEHIND THE DAMS AFTER EACH STORM OR WHEN 1/2 OF THE ORIGINAL HEIGHT OF THE DAM IS REACHED.

3. CHECK DAMS ARE TO REMAIN IN PLACE AND OPERATIONAL UNTIL THE DRAINAGE AREA AND CHANNEL ARE PERMANENTLY STABILIZED.

4. WHEN CHECK DAMS ARE REMOVED THE CHANNEL LINING OR VEGETATION IS TO BE RESTORED.

City of Colorado Springs Stormwater Quality	Figure CD-1 Check Dam Construction Detail and Maintenance Requirements

Erosion Control Blankets

What it is

Erosion control blankets are geotextiles or filter fabrics that are used to stabilize soils, steep slopes and drainage channels.

TYPES OF EROSION CONTROL BLANKETS

- WOVEN OR BONDED SYNETHETIC MATERIALS SUCH AS POLYPROPELENE, POLYESTER, POLYETHEYLENE, NYLON, POLYVINYL CHLORIDE, GLASS AND VARIOUS MIXTURES OF THESE.
- MULCH MATTING MADE FROM JUTE OR OTHER WOOD FIBER THAT HAS BEEN FORMED INTO SHEETS.
- NETTING MADE FROM JUTE OR OTHER WOOD FIBER, PLASTIC, PAPER, OR COTTON USED TO HOLD MULCH AND MATTING TO THE GROUND.
- BLANKETS OF WOVEN STRAW MULCH WITH A SYNTHETIC LAYER OR NET.

When and Where to use it

- In temporary and permanent swales.
- To protect recently seeded slopes.
- In drainageway channels.

When and Where NOT to use it

- In swales with slopes greater than 5 percent or with stormwater velocities > 8 feet per second.

Installation and Maintenance Requirements

Installation requirements are provided in Figures ECB-1 and ECB-2.

Maintenance requirements include regular inspections to determine if fabric is damaged or has come loose, and appropriate repairs or replacement of damaged materials.

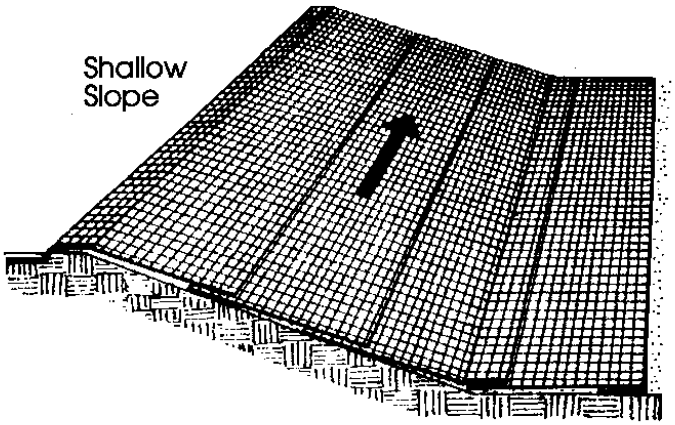

On shallow slopes, strips of netting may be applied across the slope.

Where there is a berm at the top of the slope, bring the netting over the berm and anchor it behind the berm.

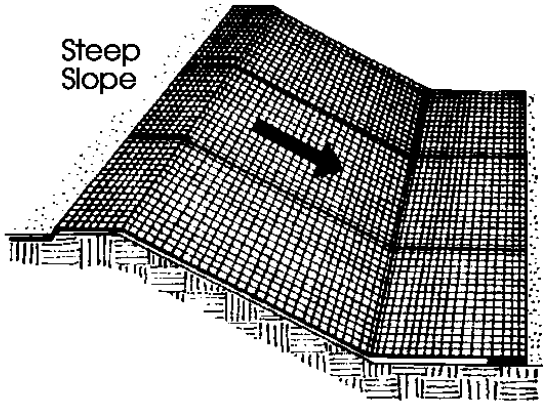

On steep slopes, apply strips of netting parallel to the direction of flow and anchor securely.

Bring netting down to a level area before terminating the installation. Turn the end under 6" and staple at 12" intervals.

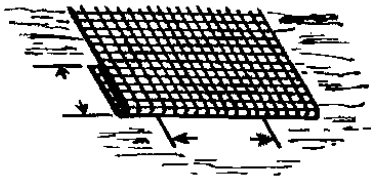

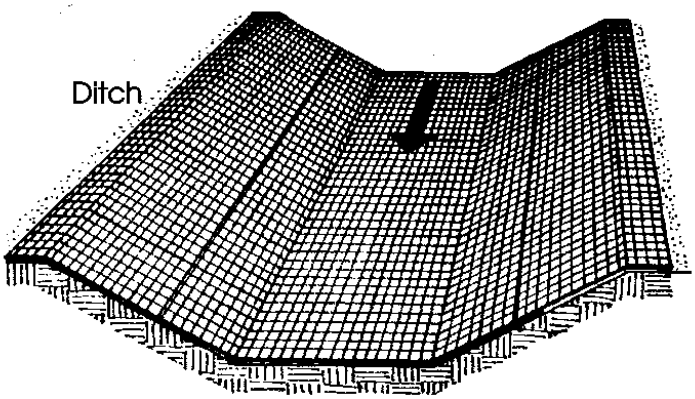

In ditches, apply netting parallel to the direction of flow. Use check slots every 15 feet. Do not join strips in the center of the ditch.

From: Virginia Soil and Water Conservation Commission, 1985

City of Colorado Springs Storm Water Quality	Figure ECB-1 Erosion Control Blanket Application Examples

DEN/M/153722.CS.CB/FigECB-1/9-99

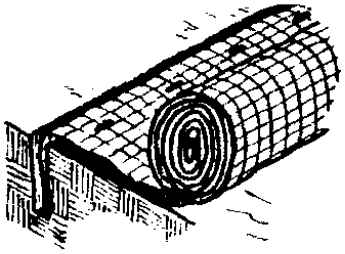

Anchor Slot: Bury the up-channel end of the net in a 6" deep trench. Tamp the soil firmly. Staple at 12" intervals across the net.

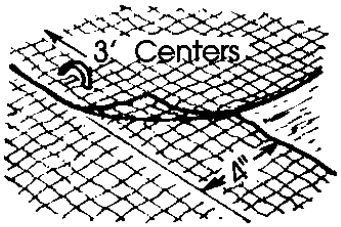

Overlap: Overlap edges of the strips at least 4". Staple every 3 feet down the center of the strip.

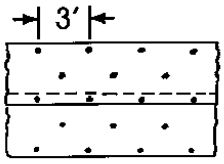

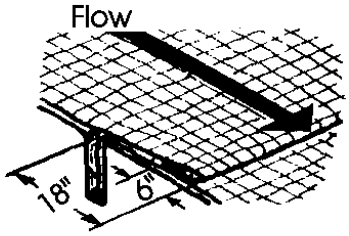

Joining Strips: Insert the new roll of net in a trench, as with the Anchor Slot. Overlap the up-channel end of the previous roll 18" and turn the end under 6". Staple the end of the previous roll just below the anchor slot and at the end at 12" intervals.

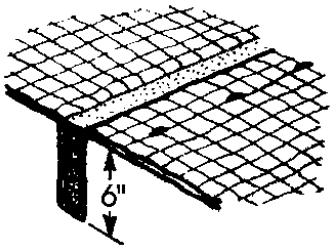

Check Slots: On erodible soils or steep slopes, check slots should be made every 15 feet. Insert a fold of the net into a 6" trench and tamp firmly. Staple at 12" intervals across the net. Lay the net smoothly on the surface of the soil - do not stretch the net, and do not allow wrinkles.

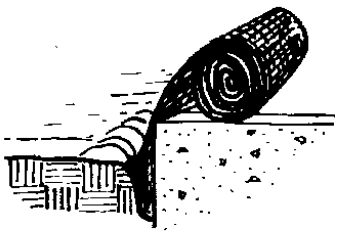

Anchoring Ends At Structures: Place the end of the net in a 6" slot on the up-channel side of the structure. Fill the trench and tamp firmly. Roll the net up the channel. Place staples at 12" intervals along the anchor end of the net.

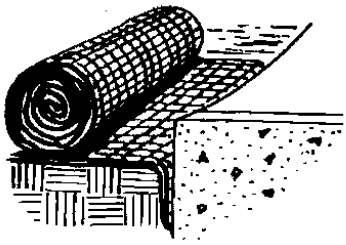

From: Virginia Soil and Water Conservation Commission, 1985

City of Colorado Springs Storm Water Quality	Figure ECB-2 Erosion Control Blanket Installation Requirements

DEN/M/153722.CS.CB/FigECB-2/9-99

Silt Fence

What it is

A silt fence is a temporary sediment barrier constructed of filter fabric stretched across supporting posts. The bottom edge of the fabric is entrenched and covered with backfill.

When and Where to use it

- On the down gradient perimeters of a construction site.
- On a contour to control overland sheet flow.
- At the top or toe of a steep slope.
- As a form of inlet protection (see inlet protection factsheet).

Figure SF-1 depicts five cases where the use of silt fence is appropriate.

When and Where NOT to use it

- In areas of concentrated flows such as in ditches, swales or channels that drain areas greater than 1.0 acre.
- At the top of a slope or at high points which do not receive any drainage flows.

This photo reveals a silt fence that has become unentrenched because it was not securely installed.

This photo illustrates what will happen to a silt fence if it is installed in an area of concentrated flow.

Construction Detail and Maintenance Requirements

Figure SF-2 provides a construction detail and maintenance requirements for a silt fence.

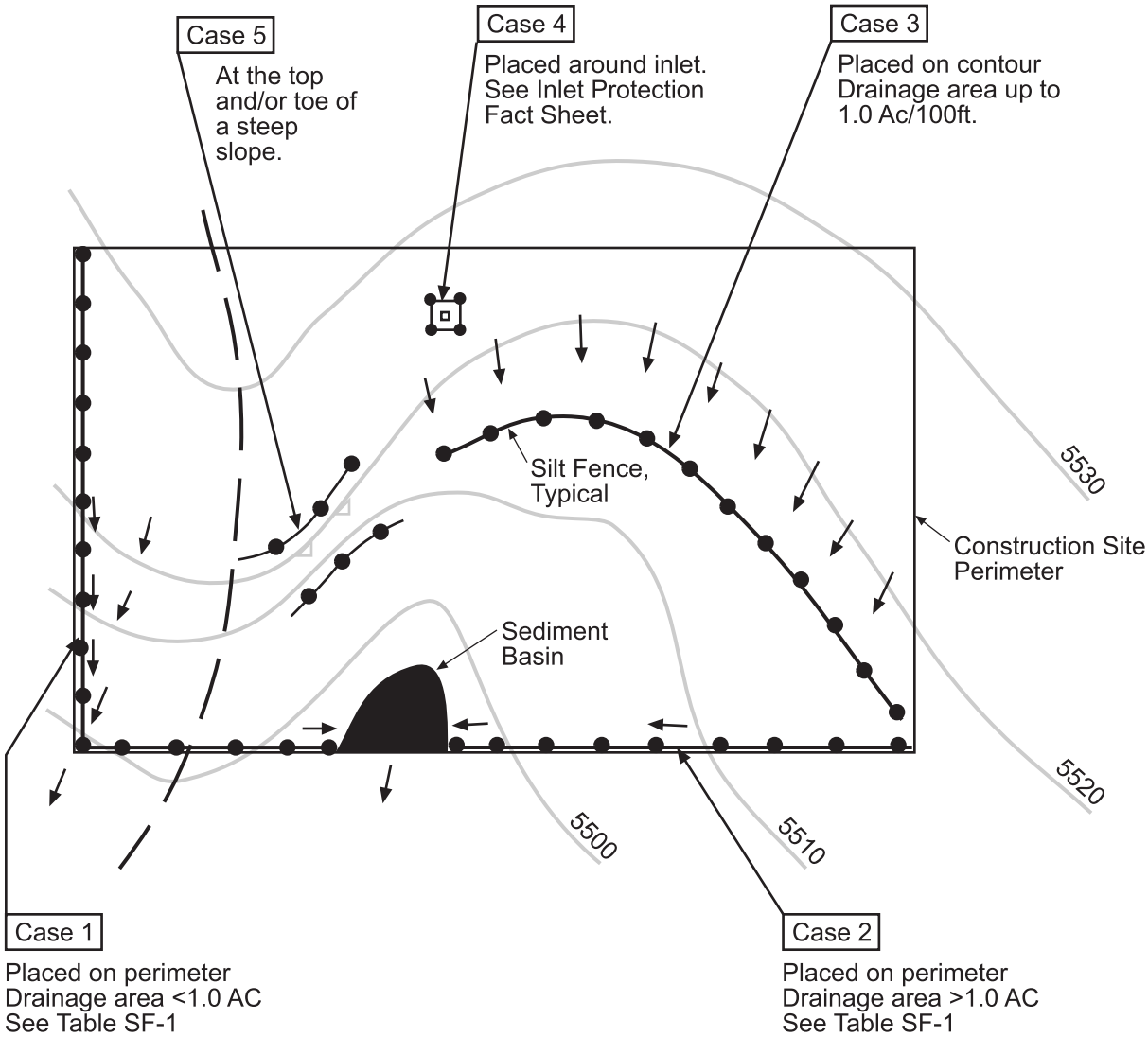

Table SF-1

Silt Fence Used as Perimeter Control	Case 1		Case 2 DA > 1.0 AC
	DA < 0.25 AC	0.25 < DA < 1 AC	
Continuous Grade	OK (1)	OK (1)	OK (1)
Area of Concentrated Flow	OK	NO (2)	NO (3)

(1) Temporary Swale or Straw Bale Barrier may be used as alternative to a Silt Fence.
(2) Check Dam may also be used as alternative to Silt Fence at low point.
(3) Sediment Basin is required for concentrated flow from drainage areas > 1.0 AC.

City of Colorado Springs Storm Water Quality	Figure SF-1 Silt Fence Application Examples

DEN/M/153722.CS.CB/FigSF-1/9-99

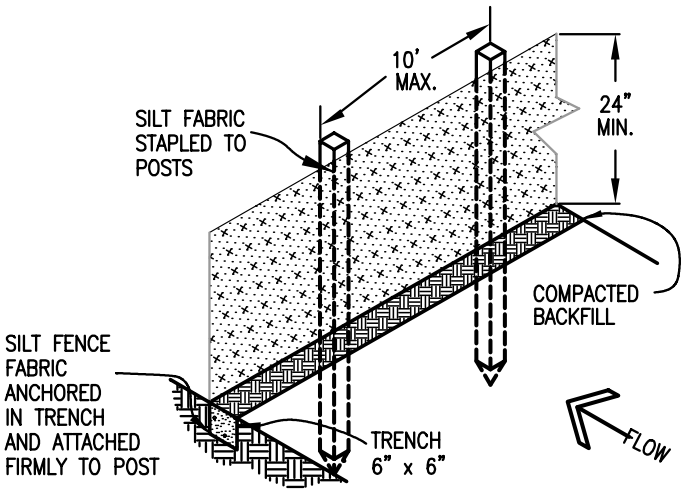

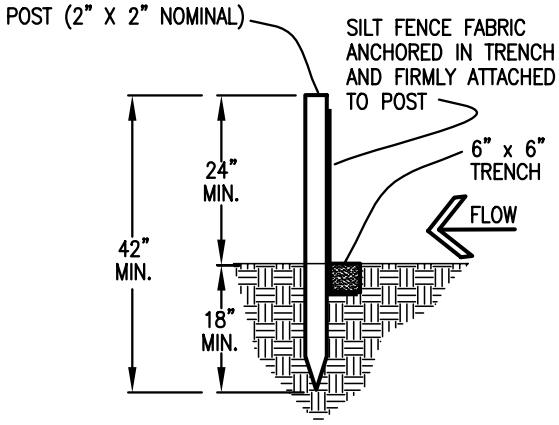

SILT FENCE

SILT FENCE NOTES

INSTALLATION REQUIREMENTS

1. SILT FENCES SHALL BE INSTALLED PRIOR TO ANY LAND DISTURBING ACTIVITIES.

2. WHEN JOINTS ARE NECESSARY, SILT FENCE GEOTEXTILE SHALL BE SPLICED TOGETHER ONLY AT SUPPORT POST AND SECURELY SEALED.

3. METAL POSTS SHALL BE "STUDDED TEE" OR "U" TYPE WITH MINIMUM WEIGHT OF 1.33 POUNDS PER LINEAR FOOT. WOOD POSTS SHALL HAVE A MINIMUM DIAMETER OR CROSS SECTION DIMENSION OF 2 INCHES.

4. THE FILTER MATERIAL SHALL BE FASTENED SECURELY TO METAL OR WOOD POSTS USING WIRE TIES, OR TO WOOD POSTS WITH 3/4" LONG #9 HEAVY-DUTY STAPLES. THE SILT FENCE GEOTEXTILE SHALL NOT BE STAPLED TO EXISTING TREES.

5. WHILE NOT REQUIRED, WIRE MESH FENCE MAY BE USED TO SUPPORT THE GEOTEXTILE. WIRE FENCE SHALL BE FASTENED SECURELY TO THE UPSLOPE SIDE OF THE POSTS USING HEAVY-DUTY WIRE STAPLES AT LEAST 3/4" LONG, TIE WIRES OR HOG RINGS. THE WIRE SHALL EXTEND INTO THE TRENCH A MINIMUM OF 6" AND SHALL NOT EXTEND MORE THAN 3' ABOVE THE ORIGINAL GROUND SURFACE.

6. ALONG THE TOE OF FILLS, INSTALL THE SILT FENCE ALONG A LEVEL CONTOUR AND PROVIDE AN AREA BEHIND THE FENCE FOR RUNOFF TO POND AND SEDIMENT TO SETTLE. A MINIMUM DISTANCE OF 5 FEET FROM THE TOE OF THE FILL IS RECOMMENDED.

7. THE HEIGHT OF THE SILT FENCE FROM THE GROUND SURFACE SHALL BE MINIMUM OF 24 INCHES AND SHALL NOT EXCEED 36 INCHES; HIGHER FENCES MAY INPOUND VOLUMES OF WATER SUFFICIENT TO CAUSE FAILURE OF THE STRUCTURE.

MAINTENANCE REQUIREMENTS

1. CONTRACTOR SHALL INSPECT SILT FENCES IMMEDIATELY AFTER EACH RAINFALL, AT LEAST DAILY DURING PROLONGED RAINFALL, AND WEEKLY DURING PERIODS OF NO RAINFALL. DAMAGED, COLLAPSED, UNENTRENCHED OR INEFFECTIVE SILT FENCES SHALL BE PROMPTLY REPAIRED OR REPLACED.

2. SEDIMENT SHALL BE REMOVED FROM BEHIND SILT FENCE WHEN IT ACCUMULATES TO HALF THE EXPOSED GEOTEXTILE HEIGHT.

3. SILT FENCES SHALL BE REMOVED WHEN ADEQUATE VEGETATIVE COVER IS ATTAINED AS APPROVED BY THE CITY.

City of Colorado Springs Stormwater Quality	Figure SF-2 Silt Fence Construction Detail and Maintenance Requirements

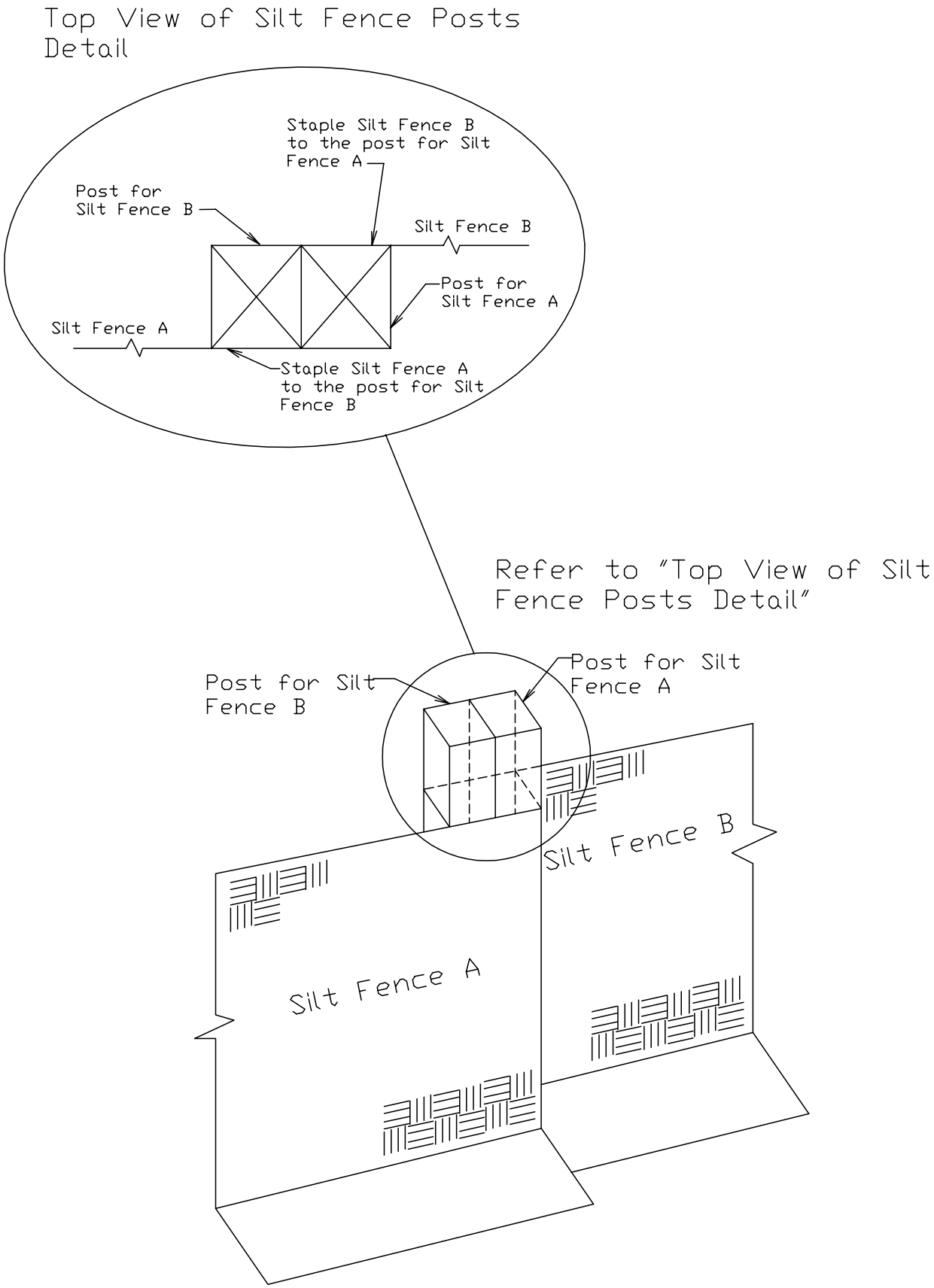

City of Colorado Springs
Stormwater Quality

Figure SF-3
Silt Fence Joint Tying
Construction Detail and Maintenance Requirements

Vehicle Tracking

What it is

Vehicle tracking refers to the stabilization of construction entrances, roads, parking areas, and staging areas to prevent the tracking of sediment from the construction site.

When and Where to use it

- All points where vehicles exit the construction site onto a public road.
- Construction entrance/exit should be located at permanent access locations if at all possible.
- Construction roads and parking areas.
- Loading and unloading areas.
- Storage and staging areas.
- Where trailers are parked.
- Any construction area that receives high vehicular traffic.

When and Where NOT to use it

- The vehicle tracking area should not be located in areas that are wet or where soils erode easily.

This picture shows an unstabilized entrance where dirt is being tracked onto a public road.

Construction Details and Maintenance Requirements

Figure VT-1 and VT-2 provide construction details and maintenance requirements for vehicle tracking.

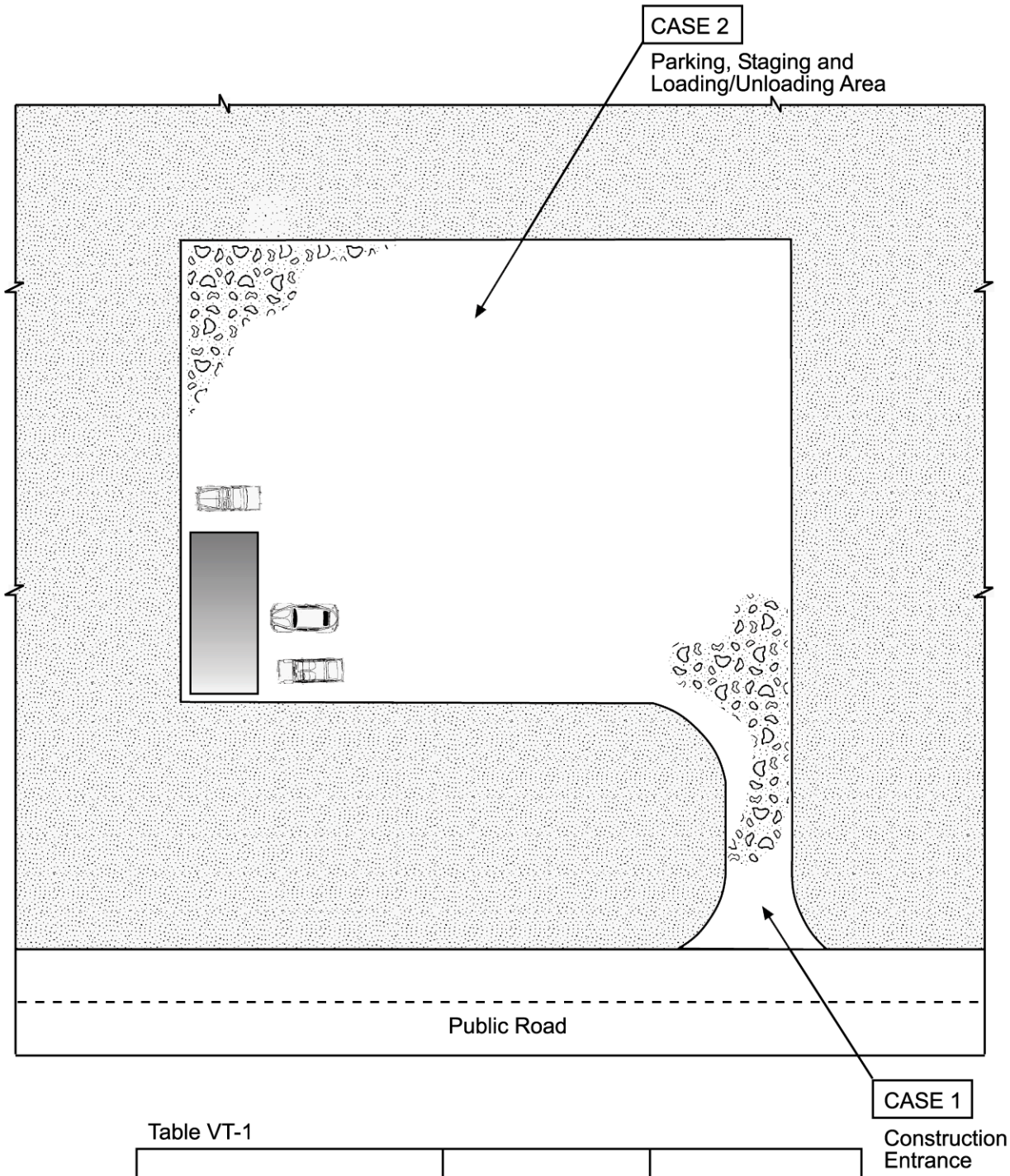

Table VT-1

	Case 1	Case 2
Gravel Thickness	9”	3”
Filter Fabric	YES	NO

City of Colorado Springs
Storm Water Quality

Figure VT-1
Vehicle Tracking
Application Examples

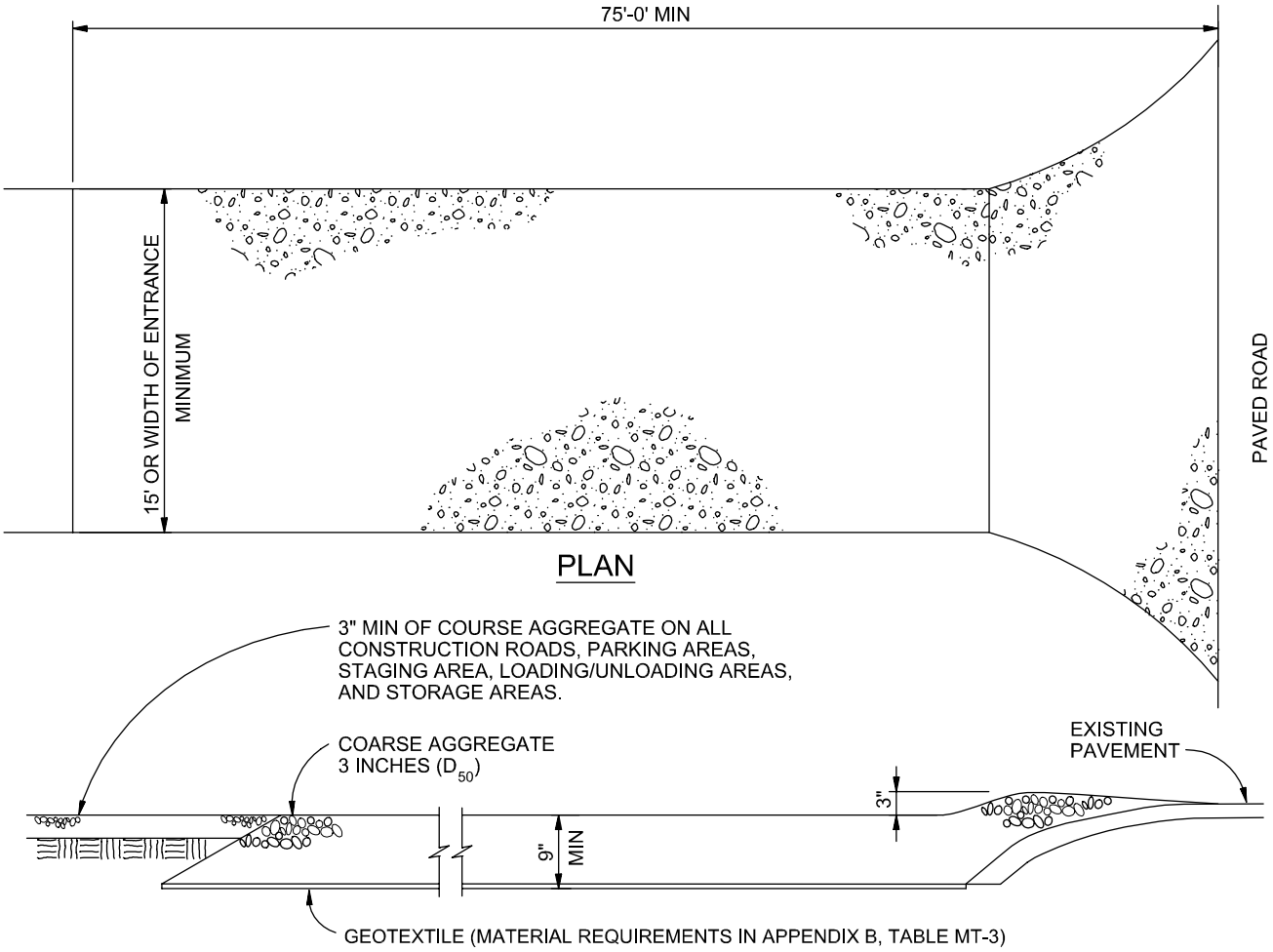

VEHICLE TRACKING

NTS

VEHICLE TRACKING NOTES

INSTALLATION REQUIREMENTS

1. ALL ENTRANCES TO THE CONSTRUCTION SITE ARE TO BE STABILIZED PRIOR TO CONSTRUCTION BEGINNING.

2. CONSTRUCTION ENTRANCES ARE TO BE BUILT WITH AN APRON TO ALLOW FOR TURNING TRAFFIC, BUT SHOULD NOT BE BUILT OVER EXISTING PAVEMENT EXCEPT FOR A SLIGHT OVERLAP.

3. AREAS TO BE STABILIZED ARE TO BE PROPERLY GRADED AND COMPACTED PRIOR TO LAYING DOWN GEOTEXTILE AND STONE.

4. CONSTRUCTION ROADS, PARKING AREAS, LOADING/UNLOADING ZONES, STORAGE AREAS, AND STAGING AREAS ARE TO BE STABILIZED.

5. CONSTRUCTION ROADS ARE TO BE BUILT TO CONFORM TO SITE GRADES, BUT SHOULD NOT HAVE SIDE SLOPES OR ROAD GRADES THAT ARE EXCESSIVELY STEEP.

MAINTENANCE REQUIREMENTS

1. REGULAR INSPECTIONS ARE TO BE MADE OF ALL STABILIZED AREAS, ESPECIALLY AFTER STORM EVENTS.

2. STONES ARE TO BE REAPPLIED PERIODICALLY AND WHEN REPAIR IS NECESSARY.

3. SEDIMENT TRACKED ONTO PAVED ROADS IS TO BE REMOVED DAILY BY SHOVELING OR SWEEPING. SEDIMENT IS NOT TO BE WASHED DOWN STORM SEWER DRAINS.

4. STORM SEWER INLET PROTECTION IS TO BE IN PLACE, INSPECTED, AND CLEANED IF NECESSARY.

5. OTHER ASSOCIATED SEDIMENT CONTROL MEASURES ARE TO BE INSPECTED TO ENSURE GOOD WORKING CONDITION.

City of Colorado Springs Stormwater Quality	Figure VT-2 Vehicle Tracking Application Examples

Grass Swale (GS) – Sedimentation Facility

Description

A grass swale (GS) sedimentation facility is an integral part of the MDCIA development concept. They are densely vegetated drainageways with low-pitched sideslopes that collect and slowly convey runoff. Design of their longitudinal slope and cross-section size forces the flow to be slow and shallow, thereby facilitating sedimentation while limiting erosion. Berms or check dams should be installed perpendicular to the flow as needed to slow it down and to encourage settling and infiltration.

General Application

A GS can be located to collect overland flows from areas such as parking lots, buildings, residential yards, roadways and grass buffer strips (GBs). They can be made a part of the plans to minimize a directly connected impervious area by using them as an alternative to a curb-and-gutter system. A GS is set below adjacent ground level, and runoff enters the swales over grassy banks. The potential exists for wetland vegetation to become established if the swale experiences standing water or if there is a base flow. If that condition is possible, consider the use of underdrains. A site with a base flow should be managed as either a swale with an unlined trickle channel, or as a wetland bottom channel, the latter providing an additional BMP to stormwater runoff.

Advantages/Disadvantages

General

A GS, which can be more aesthetically pleasing than concrete or rock-lined drainage systems, is generally less expensive to construct. Although limited by the infiltration capacity of local soils, this BMP can also provide some reduction in runoff volumes from small storms. Dense grasses can reduce flow velocities and protect against erosion during larger storm events. Swales in residential and commercial/industrial settings can also be used to limit the extent of directly connected impervious areas.

The disadvantages of using GSs without underdrains include the possibility of soggy and wet areas in front yards, the potential for mosquito breeding areas, and the potential need for more right-of-way than is needed for a storm sewer.

Physical Site Suitability

A GS is practical only at sites with general ground slopes of less than 4 percent and are definitely not practical for sites steeper than 6 percent. The longitudinal slopes of a GS should be kept to less than 1 percent, which often necessitates the use of grade control checks or drop structures. Where the general terrain slope exceeds 4 percent, a GS is often practical only on the upslope side of the adjacent street.

When soils with high permeability (for example, Class A or B) are available, the swale will infiltrate a portion of the runoff into the ground, but such soils are not required for effective application of this BMP. When Class C and D soils are present, the use of a sand/gravel underdrain is recommended.

Pollutant Removal

Removal rates reported in literature vary and fall into the low to medium range. Under good soil conditions and low flow velocities, moderate removal of suspended solids and associated other constituents can be expected. If soil conditions permit, infiltration can remove low to moderate loads of soluble pollutants when flow velocities are very low. As a result, small frequently occurring storms can benefit the most. See Table ND-2 in section 4.1, *New Development Planning* for estimated ranges in pollutant removal rates by this BMP.

Design Considerations and Criteria

Figure GS-1 shows trapezoidal and triangular swale configurations. A GS is sized to maintain a low velocity during small storms and to collect and convey larger runoff events, all for the projected fully developed land use conditions. If the design flows are not based on fully developed land conditions, the swales will be undersized and will not provide the intended pollutant removal, flow attenuation, or flow conveyance capacity.

A healthy turf grass cover must be developed to foster dense vegetation. Permanent irrigation in some cases may be necessary. Judicious use of GSs can replace both the curb-and-gutter systems and greatly reduce the storm sewer systems in the upper portions of each watershed when designed to convey the "initial storm" (for example, a 2- or a 5-year storm) at slow velocities. However, if one or both sides of the GS are also to be used as a GB, the design of the

GB has to follow the requirements for the Grass Buffer (GB) , as listed previously in this section 4.2.

Design Procedure and Criteria

The following steps outline the GS design procedure and criteria.

1. Design Discharge	Determine the 2-year flow rate in the proposed GS using hydrologic procedures described in the Storm Runoff section of the City of Colorado Springs and El Paso County Drainage Criteria Manual.
2. Swale Geometry	Select geometry for the GS. The cross section should be either trapezoidal or triangular with side slopes flatter than 3:1 (Horizontal/ Vertical), preferably 4:1 or flatter. The wider the wetted area of the swale, the slower the flow.
3. Longitudinal Slope	Maintain a longitudinal slope for the GS between 0.2 and 1.0 percent. If the longitudinal slope requirements can not be satisfied with available terrain, grade control checks or small drop structures must be incorporated to maintain the required longitudinal slope. If the slope of the swale exceeds 0.5 percent in semi-arid areas of Colorado, the swale must be vegetated with irrigated turf grass.
4. Flow Velocity and Depth	Calculate the velocity and depth of flow through the swale. Based on Mannings equation and a Mannings roughness coefficient of n=0.05, find the channel velocity and depth using the 2-year flow rate determined in Step 1. Maximum flow velocity of the channel shall not exceed 2.0 feet per second and the maximum flow depth shall not exceed 3 feet at the 2-year peak flow rate. If these conditions are not attained, repeat steps 2 through 4 each time altering the depth and bottom width or longitudinal slopes until these criteria are satisfied.
5. Vegetation	Vegetate the GS with dense turf grass to promote sedimentation, filtration, and nutrient uptake, and to limit erosion through maintenance of low flow velocities.
6. Street and Driveway Crossings	If applicable, small culverts at each street crossing and/or driveway crossing may be used to provide onsite stormwater capture volume in a similar fashion to an EDB (if adequate volume is available).
7. Drainage and Flood Control	Check the water surface during larger storms such as the 5-year through the 100-year floods to ensure that drainage from these larger events is being handled without flooding critical areas or residential, commercial, and industrial structures.

Design Example

Design forms that provide a means of documenting the design procedure are included in the *Design Forms* section. A completed form follows as a design example.

Maintenance Recommendations

Table GS-1 summarizes maintenance needs and related issues and shows the recommended frequency of various maintenance activities.

Healthy grass can generally be maintained without using fertilizers because runoff from lawns and other areas contains the needed nutrients. Occasionally inspecting the grass over the first few years will help to determine if any problems are developing and to plan for long-term restorative maintenance needs.

TABLE GS-1
Grass-Lined Swale Maintenance Considerations

Required Action	Maintenance Objective	Frequency of Action
Lawn mowing and lawn care	Maintain irrigated grass at 2 to 4 inches tall and nonirrigated native grass at 6 to 8 inches tall. Collect cuttings and dispose of them offsite or use a mulching mower.	Routine – As needed.
Debris and litter removal	Keep the area clean for aesthetic reasons, which also reduces floatables being flushed downstream.	Routine – As needed by inspection, but no less than two times per year.
Sediment removal	Remove accumulated sediment near culverts and in channels to maintain flow capacity. Replace the grass areas damaged in the process.	Routine – As needed by inspection. Estimate the need to remove sediment from 3 to 10 percent of total length per year, as determined by annual inspection.
Grass reseeding and mulching	Maintain a healthy dense grass in channel and side slope.	Nonroutine – As needed by annual inspection.
Inspections	Check the grass for uniformity of cover, sediment accumulation in the swale, and near culverts.	Routine – Annual inspection is suggested.

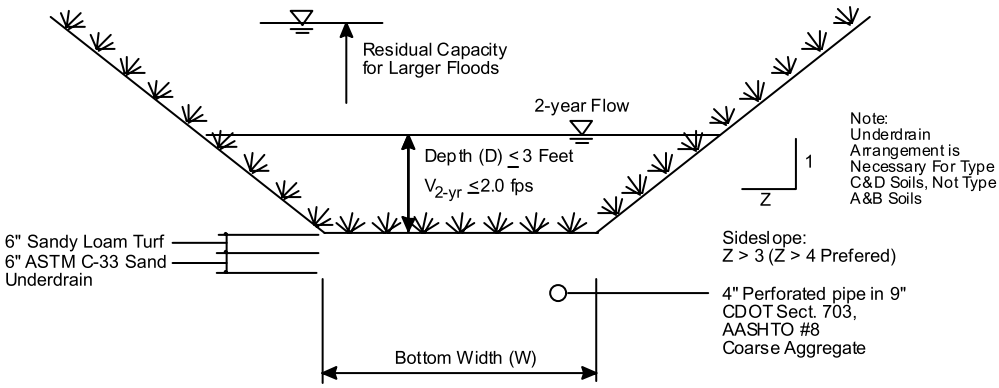

TRAPEZOIDAL GRASS-LINED SWALE SECTION

NOT TO SCALE

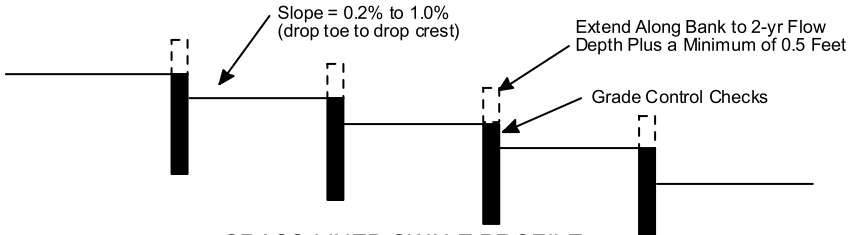

GRASS-LINED SWALE PROFILE

NOT TO SCALE

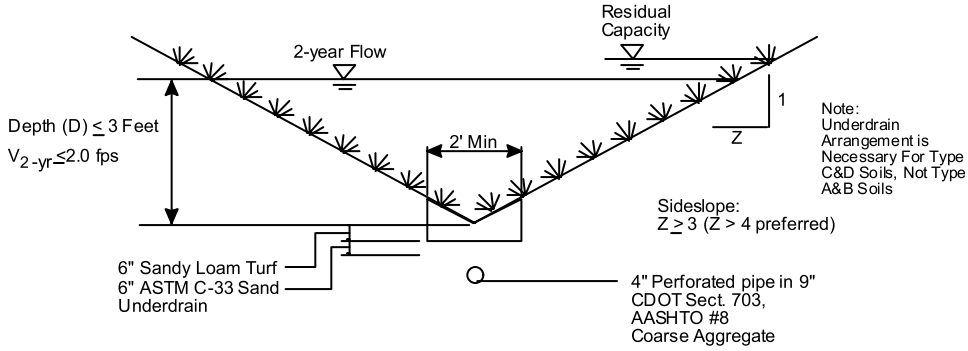

TRIANGULAR GRASS-LINED SWALE SECTION

NOT TO SCALE

FIGURE GS-1
Profile and Sections of a Grass Swale

Sediment Basin

What it is

A temporary sediment basin detains sediment-laden runoff long enough to allow much of the sediment to settle out. Sediment basins are constructed by excavation and/or by placing an earthen embankment across a low area or drainage swale. Basins can be designed to maintain a permanent pool or to drain completely dry through a controlled outlet structure.

When and Where to use it

- Required in disturbed areas draining more than one acre.
- Where there is sufficient space and appropriate topography.
- In areas that allow access for maintenance and sediment removal.
- Positioned so that it captures sediment from the entire upstream disturbed area.
- Where a permanent detention basin is planned for the site.

When and Where NOT to use it

- Sediment basins are not to be installed in active streams.

This low area will provide for some removal of sediment; however, it lacks a designed outlet structure.

Construction Detail and Maintenance Requirements

Figure SB-1 provides a construction detail and maintenance requirements for a sediment basin.

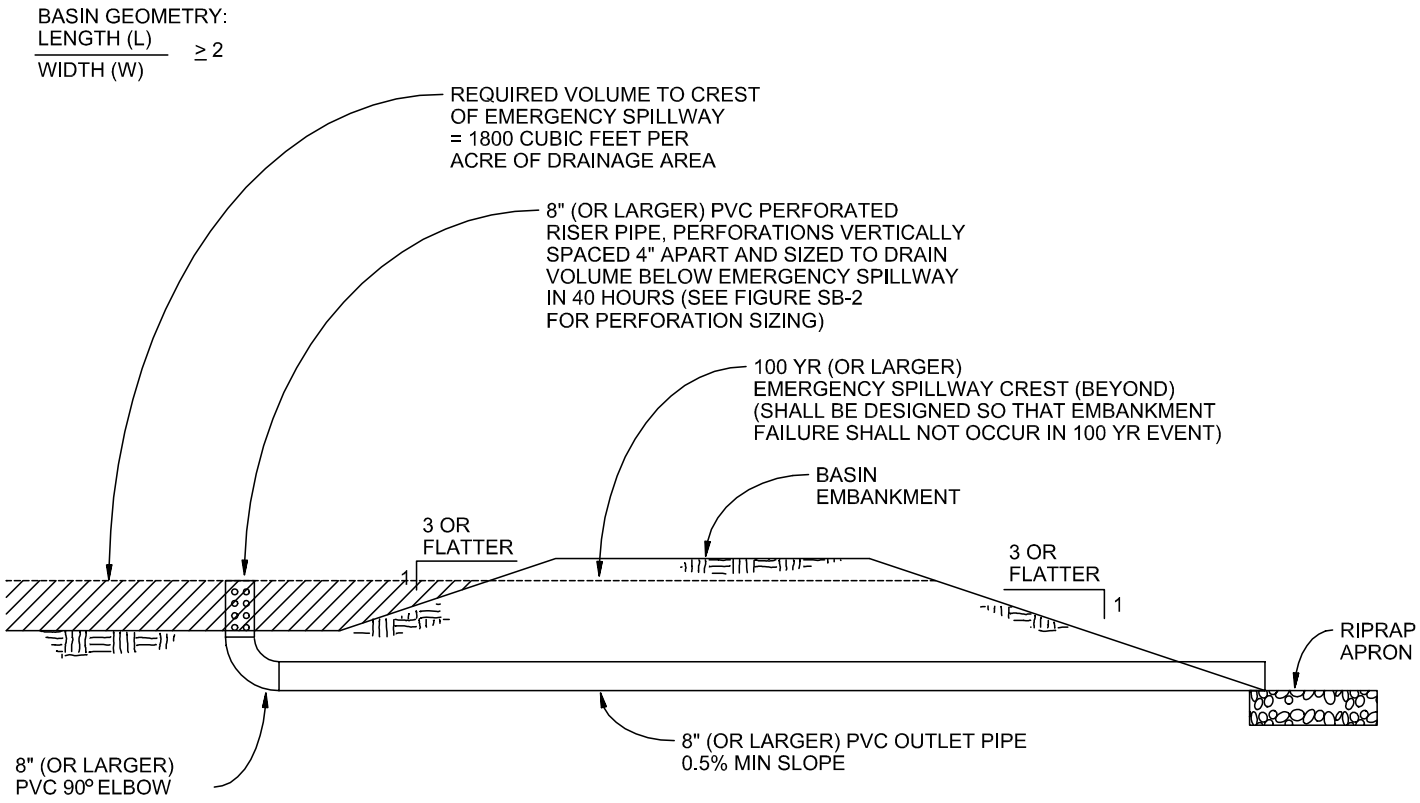

SEDIMENT BASIN

NTS

SEDMENT BASIN NOTES

INSTALLATION REQUIREMENTS

1. SEDIMENT BASINS SHALL BE INSTALLED BEFORE ANY CLEARING AND/OR GRADING IS UNDERTAKEN.

2. THE AREA UNDER WHICH THE EMBANKMENT IS TO BE INSTALLED SHALL BE CLEARED, GRUBBED, AND STRIPPED OF ALL VEGETATION AND ROOT MAT.

3. THE OUTLET OF THE BASIN SHALL BE DESIGNED TO DRAIN ITS VOLUME IN 40 HOURS.

4. THE OUTLET IS TO BE LOCATED AT THE FURTHEST DISTANCE FROM THE INLET OF THE BASIN. BAFFLES MAY BE NEEDED TO INCREASE THE FLOW LENGTH AND SETTLING TIME.

5. EMBANKMENT MATERIAL SHALL CONSIST OF SOIL WITH A MINIMUM OF 15% PASSING A #200 SIEVE. EXCAVATED SOIL CAN BE USED IF IT MEETS THIS REQUIREMENT.

6. EMBANKMENT IS TO BE COMPACTED TO AT LEAST 90% OF MAXIMUM DENSITY AND WITHIN 2% OF OPTIMUM MOISTURE CONTENT ACCORDING TO ASTM D 698.

7. WHEN A BASIN IS INSTALLED NEAR A RESIDENTIAL AREA, FOR SAFETY REASONS, A SIGN SHALL BE POSTED AND THE AREA SECURED WITH A FENCE.

MAINTENANCE REQUIREMENTS

1. CONTRACTOR SHALL INSPECT SEDIMENT BASINS AFTER EACH RAINFALL, AT LEAST DAILY DURING PROLONGED RAINFALL, AND WEEKLY DURING PERIODS NO RAINFALL.

2. SEDIMENT BASINS SHALL BE CLEANED OUT BEFORE SEDIMENT HAS FILLED HALF THE VOLUME OF THE BASIN.

3. SEDIMENT BASINS SHALL REMAIN OPERATIONAL AND PROPERLY MAINTAINED UNTIL THE SITE AREA IS PERMANENTLY STABILIZED WITH ADEQUATE VEGETATIVE COVER AND/OR OTHER PERMANENT STRUCTURE AS APPROVED BY THE CITY.

City of Colorado Springs Stormwater Quality	Figure SB-1 Sediment Basin Construction Detail and Maintenance Requirements

Required Area per Row (in^2)

		Depth at Outlet (ft)							
		1.0	1.5	2.0	2.5	3.0	3.5	4.0	4.5
Design Volume (acre-ft)	2	15.04	7.71	5.10	3.76	2.95	2.41	2.02	1.73
	1	7.52	3.86	2.55	1.88	1.48	1.21	1.01	0.87
	0.6	4.51	2.31	1.53	1.13	0.89	0.72	0.61	0.52
	0.4	3.01	1.54	1.02	0.75	0.59	0.48	0.40	0.35
	0.2	1.50	0.77	0.51	0.38	0.30	0.24	0.20	0.17
	0.1	0.75	0.39	0.26	0.19	0.15	0.12	0.10	0.09
	0.06	0.45	0.23	0.15	0.11	0.09	0.07	0.06	0.05
	0.04	0.30	0.15	0.10	0.08	0.06	0.05	0.04	0.03
	0.02	0.15	0.08	0.05	0.04	0.03	0.02	0.02	0.02
	0.01	0.08	0.04	0.03	0.02	0.01	0.01	0.01	0.01

TABLE SB-1

Circular Perforation Sizing

Hole Diameter (in)	Hole Diameter (in)	Area per Row (in^2)		
		n = 1	n = 2	n = 3
1/4	0.250	0.05	0.10	0.15
5/16	0.313	0.08	0.15	0.23
3/8	0.375	0.11	0.22	0.33
7/16	0.438	0.15	0.30	0.45
1/2	0.500	0.20	0.39	0.59
9/16	0.563	0.25	0.50	0.75
5/8	0.625	0.31	0.61	0.92
11/16	0.688	0.37	0.74	1.11
3/4	0.750	0.44	0.88	1.33
7/8	0.875	0.60	1.20	1.80
1	1.000	0.79	1.57	2.36
1 1/8	1.125	0.99	1.99	2.98
1 1/4	1.250	1.23	2.45	3.68
1 3/8	1.375	1.48	2.97	4.45
1 1/2	1.500	1.77	3.53	5.30
1 5/8	1.625	2.07	4.15	6.22
1 3/4	1.750	2.41	4.81	7.22
1 7/8	1.875	2.76	5.52	8.28
2	2.000	3.14	6.28	9.42
n = Number of columns of perforations				
Minimum steel plate thickness		1/4"	5/16"	3/8"

TABLE SB-2

Temporary Stream Crossing (TSC) SM-10

Description

Where an actively flowing watercourse must be crossed regularly by construction vehicles, a temporary crossing should be provided. Three primary methods are available:

- Culvert crossing
- Stream ford
- Temporary bridge

Culvert crossings and fords are the most commonly used methods. Due to the expense associated with a temporary bridge, these are used primarily on long-term projects.

Photograph TSC-1. A temporary stream crossing using culverts. Photo courtesy of Tom Gore.

Appropriate Uses

Construction vehicles shall be kept out of waterways to the maximum extent practicable. Use a temporary stream crossing when it is absolutely necessary to cross a stream on a construction site. Construct a temporary crossing even if the stream or drainageway is typically dry. Multiple stream crossings should be avoided to minimize environmental impacts.

A permit is required for placement of fill in a waterway under Section 404 of the Clean Water Act. The local office of the U.S. Army Corps of Engineers (USACE) should be contacted concerning the requirements for obtaining a 404 permit. In addition, a permit from the U.S. Fish and Wildlife Service (USFWS) may be needed if endangered species are of concern in the work area. Typically, the USFWS issues are addressed by a 404 permit, if one is required. The municipality of jurisdiction should also be consulted, and can provide assistance. Other permits to be obtained may include a floodplain development permit from the local jurisdiction.

Design and Installation

Design details are provided for these types of stream crossings:

TSC-1. Culvert Crossing

TSC-2. Ford Crossing

TSC-3. Flume Crossing

Temporary Stream Crossing	
Functions	
Erosion Control	Yes
Sediment Control	Yes
Site/Material Management	No

A culvert crossing should be sized appropriately with consideration for the duration of construction and seasonal variation of flows. The sizing methodology provided in the Temporary Diversion Methods Fact Sheet is also appropriate for determining the design flow for temporary stream crossings. Culvert sizing must account for the headwater and tailwater controls to properly size the culvert. For additional discussion on design of box culverts and pipes, see the *Major Drainage* chapter in Volume 1. The designer also needs to confirm that the riprap selected is appropriate for the conditions in the channel being crossed.

When a ford must be used, namely when a culvert is not practical or the best solution, the ford should be lined with at least a 12-inch thick layer of Type VL (D_{50} = 6 inches) or Type L (D_{50} = 9 inches) riprap with void spaces filed with 1-1/2 inch diameter rock. Ford crossings are recommended primarily for crossings of ephemeral (i.e. intermittently, briefly flowing) streams.

For a temporary bridge crossing, consult with a structural and/or geotechnical engineer for temporary bridge design or consider pre-fabricated alternatives.

Maintenance and Removal

Inspect stream for bank erosion and in-stream degradation. If bank erosion is occurring, stabilize banks using erosion control practices such as erosion control blankets. If in-stream degradation is occurring, armor the culvert outlet(s) with riprap to dissipate energy. If sediment is accumulating upstream of the crossing, remove excess sediment as needed to maintain the functionality of the crossing.

Remove the temporary crossing when it is no longer needed for construction. Take care to minimize the amount of sediment lost into the stream upon removal. Once the crossing has been removed, stabilize the stream banks with seed and erosion control blankets.

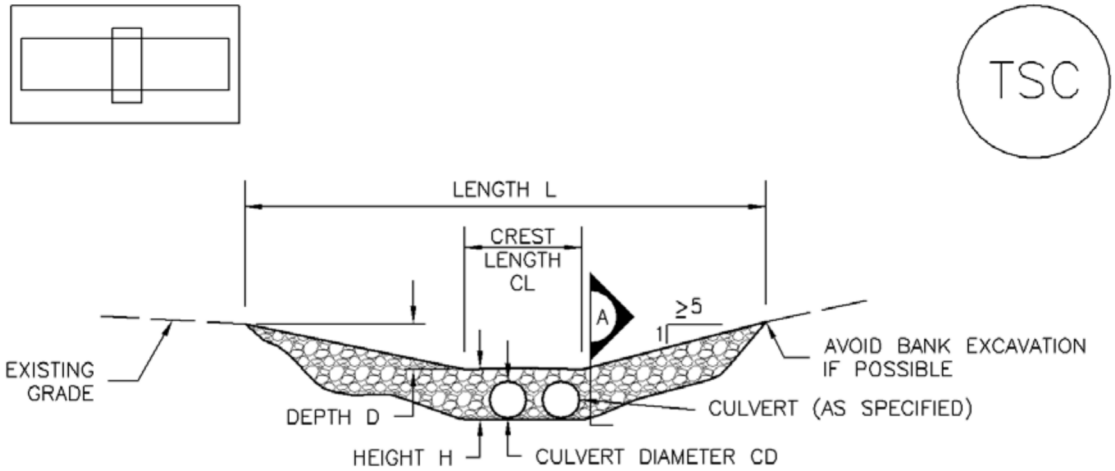

CULVERT CROSSING SECTION

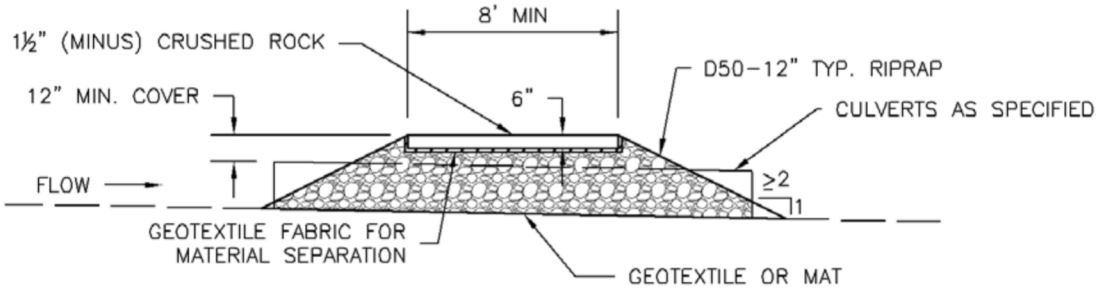

SECTION A

TSC-1. CULVERT CROSSING

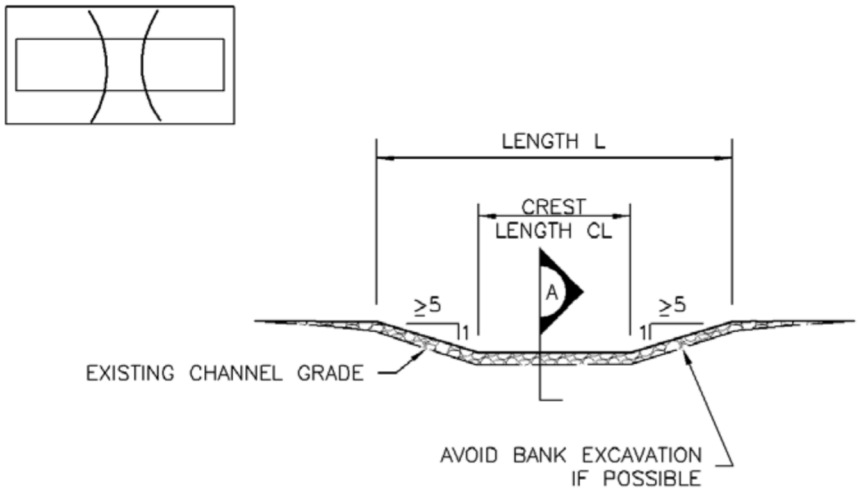

FORD CROSSING SECTION

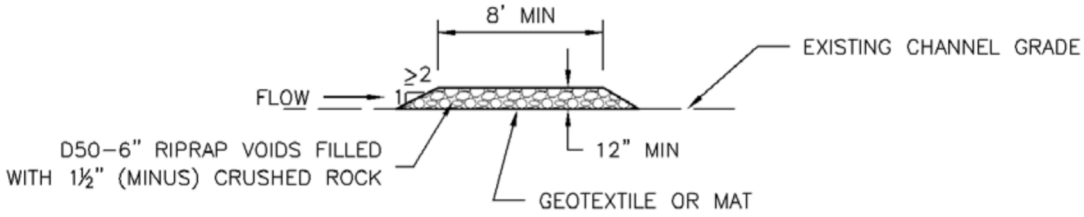

SECTION A

TSC-2. FORD CROSSING

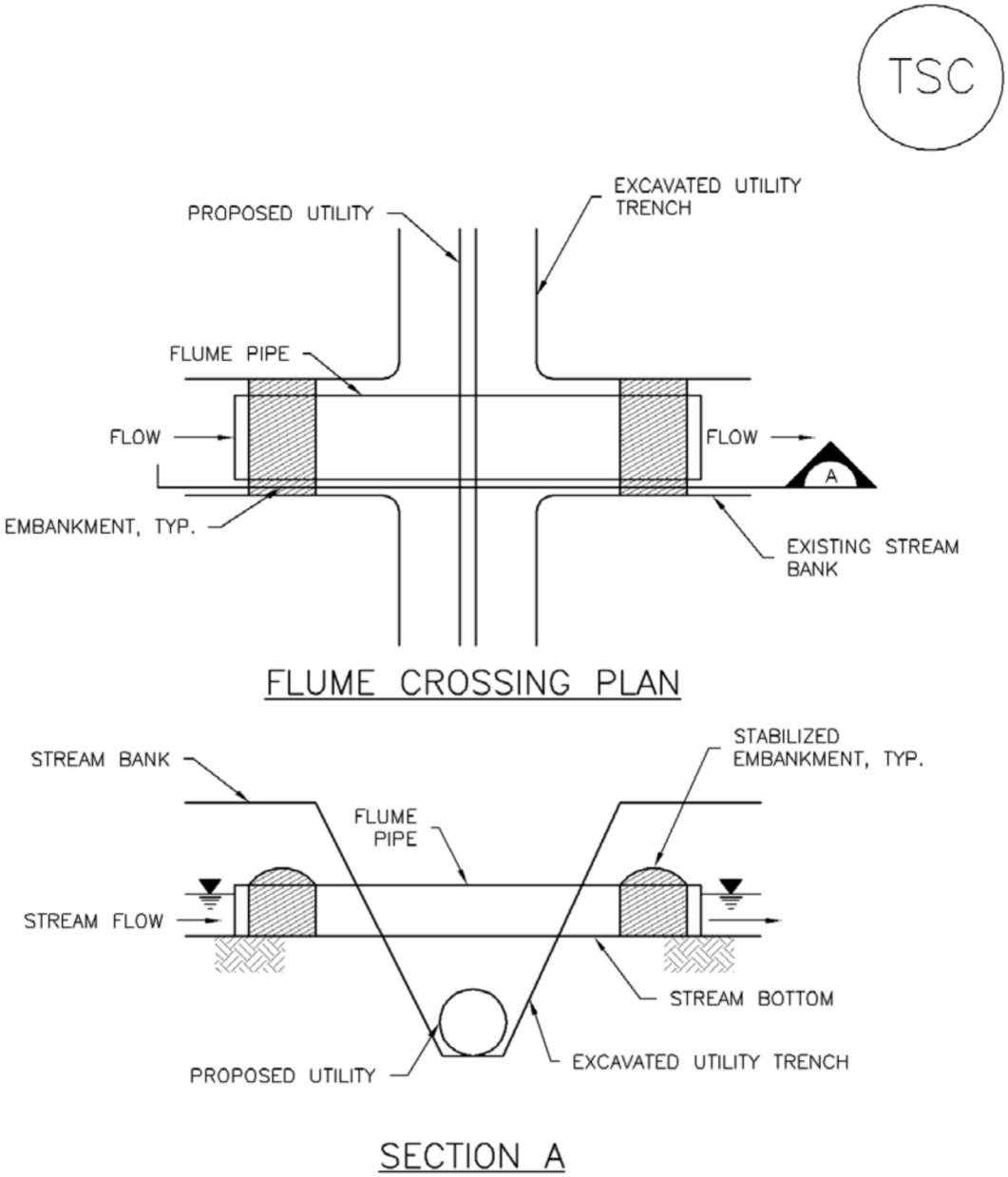

TSC–3. FLUME CROSSING

TEMPORARY STREAM CROSSING INSTALLATION NOTES

1. SEE PLAN VIEW FOR:
   - LOCATIONS OF TEMPORARY STREAM CROSSINGS.
   - STREAM CROSSING TYPE (FORD, CULVERT, OR FLUME).
   - FOR FORD CROSSING: LENGTH (L), CREST LENGTH (CL), AND DEPTH (D).
   - FOR CULVERT CROSSING: LENGTH (L), CREST LENGTH (CL), CROSSING HEIGHT (H), DEPTH (D), CULVERT DIAMETER (CD), AND NUMBER, TYPE AND CLASS OR GAUGE OF CULVERTS.

2. TEMPORARY STREAM CROSSING DIMENSIONS, D50, AND NUMBER OF CULVERTS INDICATED (FOR CULVERT CROSSING) SHALL BE CONSIDERED MINIMUM DIMENSIONS; ENGINEER MAY ELECT TO INSTALL LARGER FACILITIES. ANY DAMAGE TO STREAM CROSSING OR EXISTING STREAM CHANNEL DURING BASEFLOW OR FLOOD EVENTS SHALL BE PROMPTLY REPAIRED.

3. SEE MAJOR DRAINAGE CHAPTER FOR RIPRAP GRADATIONS.

4. WHERE FAILURE OF A STREAM CROSSING CAN RESULT IN SIGNIFICANT DAMAGE OR HARM IT MUST BE DESIGNED BY A STRUCTURAL ENGINEER.

TEMPORARY STREAM CROSSING MAINTENANCE NOTES

1. INSPECT BMPs EACH WORKDAY, AND MAINTAIN THEM IN EFFECTIVE OPERATING CONDITION. MAINTENANCE OF BMPs SHOULD BE PROACTIVE, NOT REACTIVE. INSPECT BMPs AS SOON AS POSSIBLE (AND ALWAYS WITHIN 24 HOURS) FOLLOWING A STORM THAT CAUSES SURFACE EROSION, AND PERFORM NECESSARY MAINTENANCE.

2. FREQUENT OBSERVATIONS AND MAINTENANCE ARE NECESSARY TO MAINTAIN BMPs IN EFFECTIVE OPERATING CONDITION. INSPECTIONS AND CORRECTIVE MEASURES SHOULD BE DOCUMENTED THOROUGHLY.

3. WHERE BMPs HAVE FAILED, REPAIR OR REPLACEMENT SHOULD BE INITIATED UPON DISCOVERY OF THE FAILURE.

4. REMOVE SEDIMENT ACCUMULATED UPSTREAM OF CROSSING AS NEEDED TO MAINTAIN THE FUNCTIONALITY OF THE CROSSING.

5. STREAM CROSSINGS ARE TO REMAIN IN PLACE UNTIL NO LONGER NEEDED AND SHALL BE REMOVED PRIOR TO THE END OF CONSTRUCTION.

6. WHEN STREAM CROSSINGS ARE REMOVED, THE DISTURBED AREA SHALL BE COVERED WITH TOPSOIL, SEEDED AND MULCHED AND COVERED WITH GEOTEXTILE OR OTHERWISE STABILIZED IN A MANNER APPROVED BY THE LOCAL JURISDICTION.

NOTE: MANY JURISDICTIONS HAVE BMP DETAILS THAT VARY FROM UDFCD STANDARD DETAILS. CONSULT WITH LOCAL JURISDICTIONS AS TO WHICH DETAIL SHOULD BE USED WHEN DIFFERENCES ARE NOTED.

(DETAIL ADAPTED FROM DOUGLAS COUNTY, COLORADO AND CITY OF AURORA, COLORADO (Va. DSWC), NOT AVAILABLE IN AUTOCAD)

Street Sweeping and Vacuuming (SS) SM-7

Description

Street sweeping and vacuuming remove sediment that has been tracked onto roadways to reduce sediment transport into storm drain systems or a surface waterway.

Appropriate Uses

Use this practice at construction sites where vehicles may track sediment offsite onto paved roadways.

Photograph SS-1. A street sweeper removes sediment and potential pollutants along the curb line at a construction site. Photo courtesy of Tom Gore.

Design and Installation

Street sweeping or vacuuming should be conducted when there is noticeable sediment accumulation on roadways adjacent to the construction site. Typically, this will be concentrated at the entrance/exit to the construction site. Well-maintained stabilized construction entrances, vehicle tracking controls and tire wash facilities can help reduce the necessary frequency of street sweeping and vacuuming.

On smaller construction sites, street sweeping can be conducted manually using a shovel and broom. Never wash accumulated sediment on roadways into storm drains.

Maintenance and Removal

- Inspect paved roads around the perimeter of the construction site on a daily basis and more frequently, as needed. Remove accumulated sediment, as needed.
- Following street sweeping, check inlet protection that may have been displaced during street sweeping.
- Inspect area to be swept for materials that may be hazardous prior to beginning sweeping operations.

Street Sweeping/ Vacuuming	
Functions	
Erosion Control	No
Sediment Control	Yes
Site/Material Management	Yes

Sediment Control Log (SCL) SC-2

Description

A sediment control log is a linear roll made of natural materials such as straw, coconut fiber, or compost. The most common type of sediment control log has straw filling and is often referred to as a "straw wattle." All sediment control logs are used as a sediment barrier to intercept sheet flow runoff from disturbed areas.

Photographs SCL-1 and SCL-2. Sediment control logs used as 1) a perimeter control around a soil stockpile; and, 2) as a "J-hook" perimeter control at the corner of a construction site.

Appropriate Uses

Sediment control logs can be used in the following applications to trap sediment:

- As perimeter control for stockpiles and the site.
- As part of inlet protection designs.
- As check dams in small drainage ditches. (Sediment control logs are not intended for use in channels with high flow velocities.)
- On disturbed slopes to shorten flow lengths (as an erosion control).
- As part of multi-layered perimeter control along a receiving water such as a stream, pond or wetland.

Sediment control logs work well in combination with other layers of erosion and sediment controls.

Design and Installation

Sediment control logs should be installed along the contour to avoid concentrating flows. The maximum allowable tributary drainage area per 100 lineal feet of sediment control log, installed along the contour, is approximately 0.25 acres with a disturbed slope length of up to 150 feet and a tributary slope gradient no steeper than 3:1. Longer and steeper slopes require additional measures. This recommendation only applies to sediment control logs installed along the contour. When installed for other uses, such as perimeter control, it should be installed in a way that will not produce concentrated flows. For example, a "J-hook" installation may be appropriate to force runoff to pond and evaporate or infiltrate in multiple areas rather than concentrate and cause erosive conditions parallel to the BMP.

Sediment Control Log	
Functions	
Erosion Control	Moderate
Sediment Control	Yes
Site/Material Management	No

Although sediment control logs initially allow runoff to flow through the BMP, they can quickly become a barrier and should be installed as if they are impermeable.

Design details and notes for sediment control logs are provided in the following details. Sediment logs must be properly installed per the detail to prevent undercutting, bypassing and displacement. When installed on slopes, sediment control logs should be installed along the contours (i.e., perpendicular to flow).

Improper installation can lead to poor performance. Be sure that sediment control logs are properly trenched (if lighter than 8 lb/foot), anchored and tightly jointed.

Maintenance and Removal

Be aware that sediment control logs will eventually degrade. Remove accumulated sediment before the depth is one-half the height of the sediment log and repair damage to the sediment log, typically by replacing the damaged section.

Once the upstream area is stabilized, remove and properly dispose of the logs. Areas disturbed beneath the logs may need to be seeded and mulched. Sediment control logs that are biodegradable may occasionally be left in place (e.g., when logs are used in conjunction with erosion control blankets as permanent slope breaks). However, removal of sediment control logs after final stabilization is typically appropriate when used in perimeter control, inlet protection and check dam applications. Compost from compost sediment control logs may be spread over the area and seeded as long as this does not cover newly established vegetation.

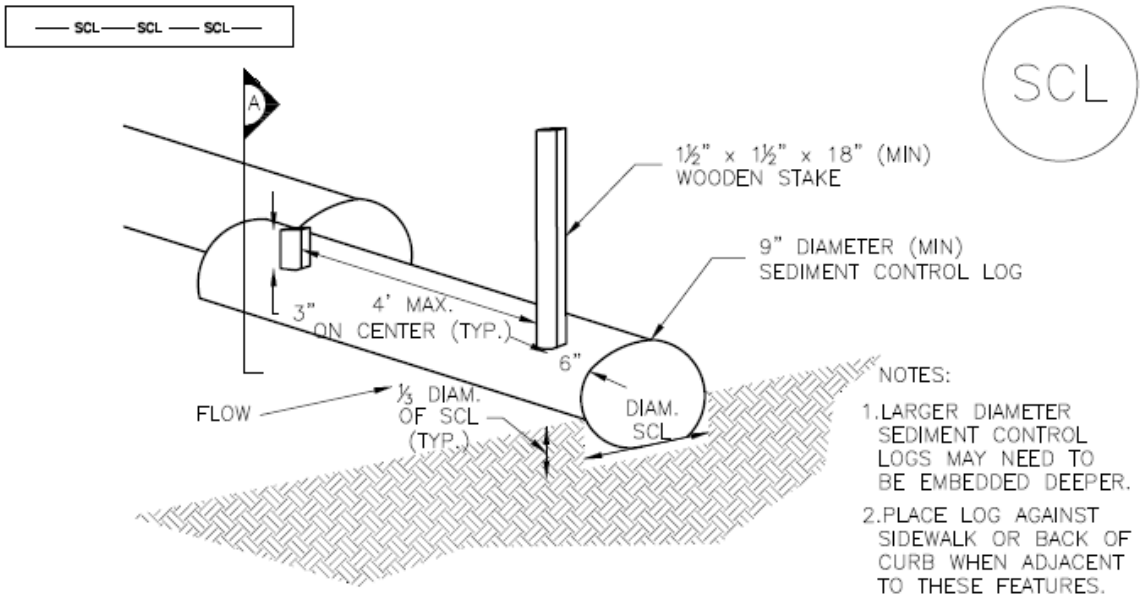

TRENCHED SEDIMENT CONTROL LOG

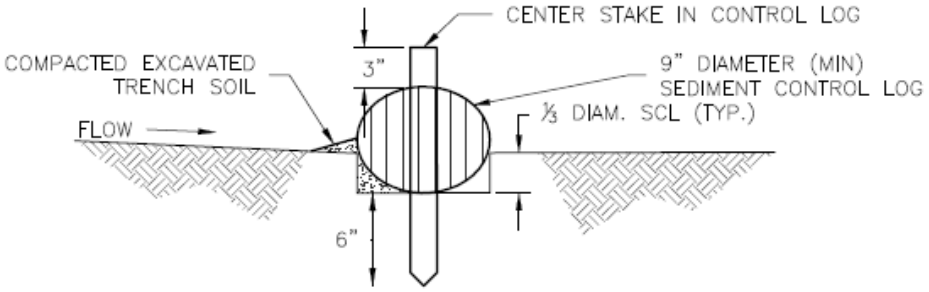

SECTION Ⓐ
TRENCHED SEDIMENT CONTROL LOG

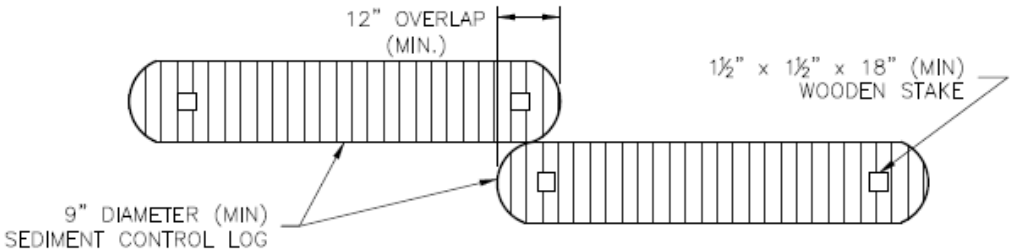

LOG JOINTS

SCL–1. TRENCHED SEDIMENT CONTROL LOG

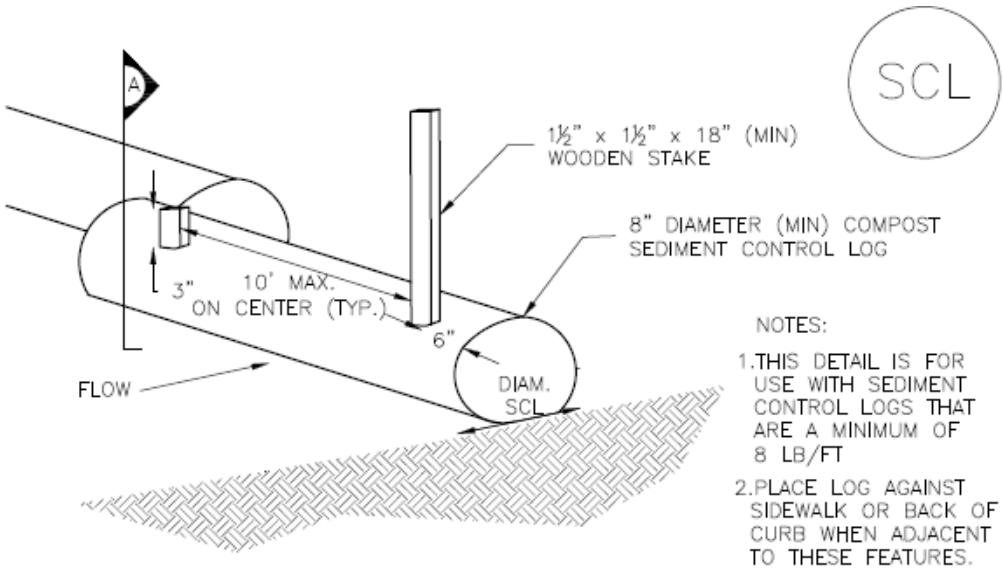

COMPOST SEDIMENT CONTROL LOG (WEIGHTED)

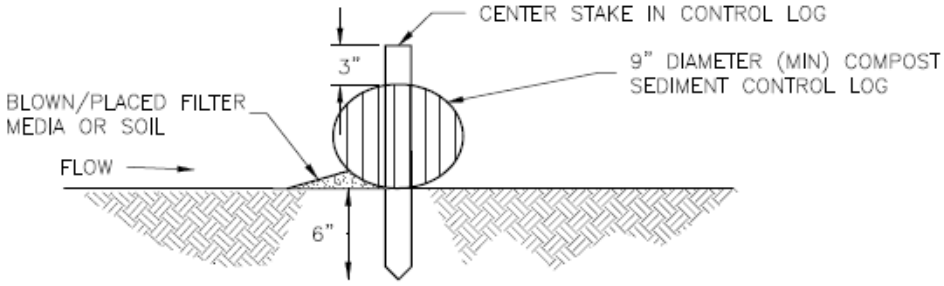

SECTION A
COMPOST SEDIMENT CONTROL LOG

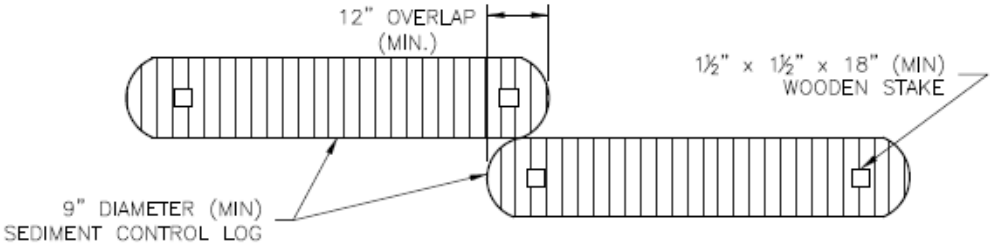

LOG JOINTS

SCL–2. COMPOST SEDIMENT CONTROL LOG (WEIGHTED)

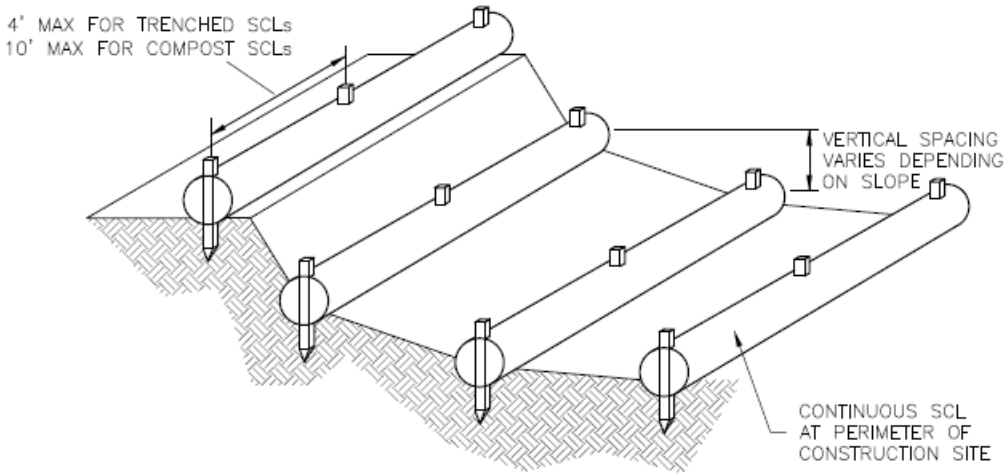

SCL–3. SEDIMENT CONTROL LOGS TO CONTROL SLOPE LENGTH

SEDIMENT CONTROL LOG INSTALLATION NOTES

1. SEE PLAN VIEW FOR LOCATION AND LENGTH OF SEDIMENT CONTROL LOGS.

2. SEDIMENT CONTROL LOGS THAT ACT AS A PERIMETER CONTROL SHALL BE INSTALLED PRIOR TO ANY UPGRADIENT LAND–DISTURBING ACTIVITIES.

3. SEDIMENT CONTROL LOGS SHALL CONSIST OF STRAW, COMPOST, EXCELSIOR OR COCONUT FIBER, AND SHALL BE FREE OF ANY NOXIOUS WEED SEEDS OR DEFECTS INCLUDING RIPS, HOLES AND OBVIOUS WEAR.

4. SEDIMENT CONTROL LOGS MAY BE USED AS SMALL CHECK DAMS IN DITCHES AND SWALES. HOWEVER, THEY SHOULD NOT BE USED IN PERENNIAL STREAMS.

5. IT IS RECOMMENDED THAT SEDIMENT CONTROL LOGS BE TRENCHED INTO THE GROUND TO A DEPTH OF APPROXIMATELY ⅓ OF THE DIAMETER OF THE LOG. IF TRENCHING TO THIS DEPTH IS NOT FEASIBLE AND/OR DESIRABLE (SHORT TERM INSTALLATION WITH DESIRE NOT TO DAMAGE LANDSCAPE) A LESSER TRENCHING DEPTH MAY BE ACCEPTABLE WITH MORE ROBUST STAKING. COMPOST LOGS THAT ARE 8 LB/FT DO NOT NEED TO BE TRENCHED.

6. THE UPHILL SIDE OF THE SEDIMENT CONTROL LOG SHALL BE BACKFILLED WITH SOIL OR FILTER MATERIAL THAT IS FREE OF ROCKS AND DEBRIS. THE SOIL SHALL BE TIGHTLY COMPACTED INTO THE SHAPE OF A RIGHT TRIANGLE USING A SHOVEL OR WEIGHTED LAWN ROLLER OR BLOWN IN PLACE.

7. FOLLOW MANUFACTURERS' GUIDANCE FOR STAKING. IF MANUFACTURERS' INSTRUCTIONS DO NOT SPECIFY SPACING, STAKES SHALL BE PLACED ON 4' CENTERS AND EMBEDDED A MINIMUM OF 6" INTO THE GROUND. 3" OF THE STAKE SHALL PROTRUDE FROM THE TOP OF THE LOG. STAKES THAT ARE BROKEN PRIOR TO INSTALLATION SHALL BE REPLACED. COMPOST LOGS SHOULD BE STAKED 10' ON CENTER.

SEDIMENT CONTROL LOG MAINTENANCE NOTES

1. INSPECT BMPs EACH WORKDAY, AND MAINTAIN THEM IN EFFECTIVE OPERATING CONDITION. MAINTENANCE OF BMPs SHOULD BE PROACTIVE, NOT REACTIVE. INSPECT BMPs AS SOON AS POSSIBLE (AND ALWAYS WITHIN 24 HOURS) FOLLOWING A STORM THAT CAUSES SURFACE EROSION, AND PERFORM NECESSARY MAINTENANCE.

2. FREQUENT OBSERVATIONS AND MAINTENANCE ARE NECESSARY TO MAINTAIN BMPs IN EFFECTIVE OPERATING CONDITION. INSPECTIONS AND CORRECTIVE MEASURES SHOULD BE DOCUMENTED THOROUGHLY.

3. WHERE BMPs HAVE FAILED, REPAIR OR REPLACEMENT SHOULD BE INITIATED UPON DISCOVERY OF THE FAILURE.

4. SEDIMENT ACCUMULATED UPSTREAM OF SEDIMENT CONTROL LOG SHALL BE REMOVED AS NEEDED TO MAINTAIN FUNCTIONALITY OF THE BMP, TYPICALLY WHEN DEPTH OF ACCUMULATED SEDIMENTS IS APPROXIMATELY ½ OF THE HEIGHT OF THE SEDIMENT CONTROL LOG.

5. SEDIMENT CONTROL LOG SHALL BE REMOVED AT THE END OF CONSTRUCTION.COMPOST FROM COMPOST LOGS MAY BE LEFT IN PLACE AS LONG AS BAGS ARE REMOVED AND THE AREA SEEDED. IF DISTURBED AREAS EXIST AFTER REMOVAL, THEY SHALL BE COVERED WITH TOP SOIL, SEEDED AND MULCHED OR OTHERWISE STABILIZED IN A MANNER APPROVED BY THE LOCAL JURISDICTION.

(DETAILS ADAPTED FROM TOWN OF PARKER, COLORADO, JEFFERSON COUNTY, COLORADO, DOUGLAS COUNTY, COLORADO, AND CITY OF AURORA, COLORADO, NOT AVAILABLE IN AUTOCAD)

NOTE: MANY JURISDICTIONS HAVE BMP DETAILS THAT VARY FROM UDFCD STANDARD DETAILS. CONSULT WITH LOCAL JURISDICTIONS AS TO WHICH DETAIL SHOULD BE USED WHEN DIFFERENCES ARE NOTED.

Description

A rock sock is constructed of gravel that has been wrapped by wire mesh or a geotextile to form an elongated cylindrical filter. Rock socks are typically used either as a perimeter control or as part of inlet protection. When placed at angles in the curb line, rock socks are typically referred to as curb socks. Rock socks are intended to trap sediment from stormwater runoff that flows onto roadways as a result of construction activities.

Photograph RS-1. Rock socks placed at regular intervals in a curb line can help reduce sediment loading to storm sewer inlets. Rock socks can also be used as perimeter controls.

Appropriate Uses

Rock socks can be used at the perimeter of a disturbed area to control localized sediment loading. A benefit of rock socks as opposed to other perimeter controls is that they do not have to be trenched or staked into the ground; therefore, they are often used on roadway construction projects where paved surfaces are present.

Use rock socks in inlet protection applications when the construction of a roadway is substantially complete and the roadway has been directly connected to a receiving storm system.

Design and Installation

When rock socks are used as perimeter controls, the maximum recommended tributary drainage area per 100 lineal feet of rock socks is approximately 0.25 acres with disturbed slope length of up to 150 feet and a tributary slope gradient no steeper than 3:1. A rock sock design detail and notes are provided in Detail RS-1. Also see the Inlet Protection Fact Sheet for design and installation guidance when rock socks are used for inlet protection and in the curb line.

When placed in the gutter adjacent to a curb, rock socks should protrude no more than two feet from the curb in order for traffic to pass safely. If located in a high traffic area, place construction markers to alert drivers and street maintenance workers of their presence.

Maintenance and Removal

Rock socks are susceptible to displacement and breaking due to vehicle traffic. Inspect rock socks for damage and repair or replace as necessary. Remove sediment by sweeping or vacuuming as needed to maintain the functionality of the BMP, typically when sediment has accumulated behind the rock sock to one-half of the sock's height.

Once upstream stabilization is complete, rock socks and accumulated sediment should be removed and properly disposed.

Rock Sock	
Functions	
Erosion Control	No
Sediment Control	Yes
Site/Material Management	No

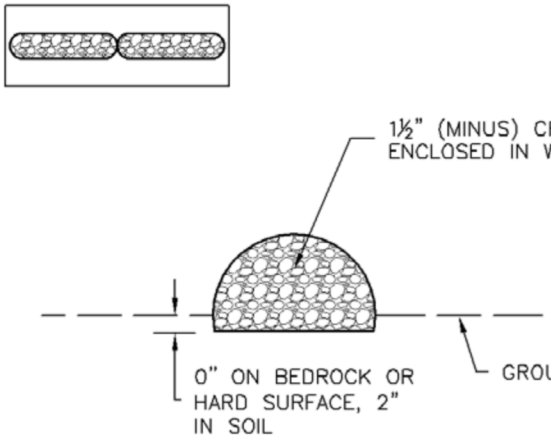

ROCK SOCK SECTION

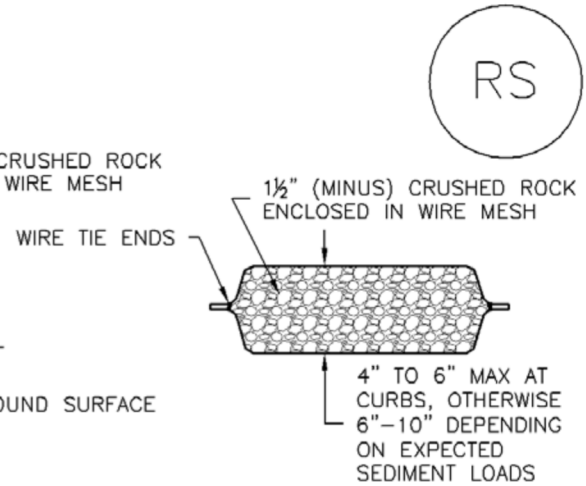

ROCK SOCK PLAN

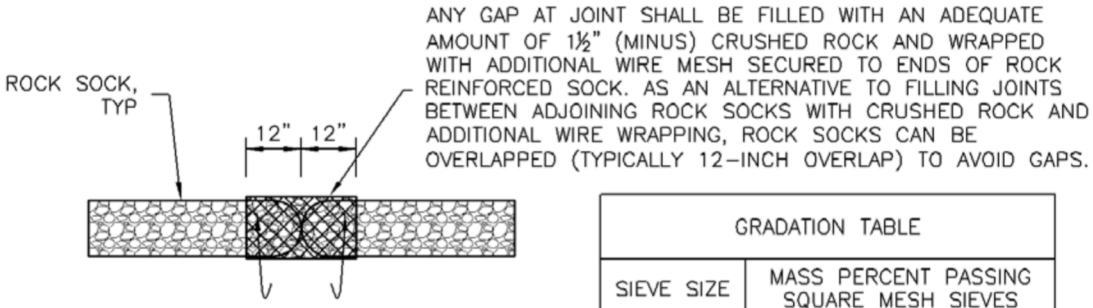

ROCK SOCK JOINTING

GRADATION TABLE	
SIEVE SIZE	MASS PERCENT PASSING SQUARE MESH SIEVES
	NO. 4
2"	100
1½"	90 – 100
1"	20 – 55
¾"	0 – 15
⅜"	0 – 5
MATCHES SPECIFICATIONS FOR NO. 4 COARSE AGGREGATE FOR CONCRETE PER AASHTO M43. ALL ROCK SHALL BE FRACTURED FACE, ALL SIDES.	

ROCK SOCK INSTALLATION NOTES

1. SEE PLAN VIEW FOR:
   –LOCATION(S) OF ROCK SOCKS.

2. CRUSHED ROCK SHALL BE 1½" (MINUS) IN SIZE WITH A FRACTURED FACE (ALL SIDES) AND SHALL COMPLY WITH GRADATION SHOWN ON THIS SHEET (1½" MINUS).

3. WIRE MESH SHALL BE FABRICATED OF 10 GAGE POULTRY MESH, OR EQUIVALENT, WITH A MAXIMUM OPENING OF ½", RECOMMENDED MINIMUM ROLL WIDTH OF 48"

4. WIRE MESH SHALL BE SECURED USING "HOG RINGS" OR WIRE TIES AT 6" CENTERS ALONG ALL JOINTS AND AT 2" CENTERS ON ENDS OF SOCKS.

5. SOME MUNICIPALITIES MAY ALLOW THE USE OF FILTER FABRIC AS AN ALTERNATIVE TO WIRE MESH FOR THE ROCK ENCLOSURE.

RS–1. ROCK SOCK PERIMETER CONTROL

ROCK SOCK MAINTENANCE NOTES

1. INSPECT BMPs EACH WORKDAY, AND MAINTAIN THEM IN EFFECTIVE OPERATING CONDITION. MAINTENANCE OF BMPs SHOULD BE PROACTIVE, NOT REACTIVE. INSPECT BMPs AS SOON AS POSSIBLE (AND ALWAYS WITHIN 24 HOURS) FOLLOWING A STORM THAT CAUSES SURFACE EROSION, AND PERFORM NECESSARY MAINTENANCE.

2. FREQUENT OBSERVATIONS AND MAINTENANCE ARE NECESSARY TO MAINTAIN BMPs IN EFFECTIVE OPERATING CONDITION. INSPECTIONS AND CORRECTIVE MEASURES SHOULD BE DOCUMENTED THOROUGHLY.

3. WHERE BMPs HAVE FAILED, REPAIR OR REPLACEMENT SHOULD BE INITIATED UPON DISCOVERY OF THE FAILURE.

4. ROCK SOCKS SHALL BE REPLACED IF THEY BECOME HEAVILY SOILED, OR DAMAGED BEYOND REPAIR.

5. SEDIMENT ACCUMULATED UPSTREAM OF ROCK SOCKS SHALL BE REMOVED AS NEEDED TO MAINTAIN FUNCTIONALITY OF THE BMP, TYPICALLY WHEN DEPTH OF ACCUMULATED SEDIMENTS IS APPROXIMATELY ½ OF THE HEIGHT OF THE ROCK SOCK.

6. ROCK SOCKS ARE TO REMAIN IN PLACE UNTIL THE UPSTREAM DISTURBED AREA IS STABILIZED AND APPROVED BY THE LOCAL JURISDICTION.

7. WHEN ROCK SOCKS ARE REMOVED, ALL DISTURBED AREAS SHALL BE COVERED WITH TOPSOIL, SEEDED AND MULCHED OR OTHERWISE STABILIZED AS APPROVED BY LOCAL JURISDICTION.

(DETAIL ADAPTED FROM TOWN OF PARKER, COLORADO AND CITY OF AURORA, COLORADO, NOT AVAILABLE IN AUTOCAD)

NOTE: MANY JURISDICTIONS HAVE BMP DETAILS THAT VARY FROM UDFCD STANDARD DETAILS. CONSULT WITH LOCAL JURISDICTIONS AS TO WHICH DETAIL SHOULD BE USED WHEN DIFFERENCES ARE NOTED.

NOTE: THE DETAILS INCLUDED WITH THIS FACT SHEET SHOW COMMONLY USED, CONVENTIONAL METHODS OF ROCK SOCK INSTALLATION IN THE DENVER METROPOLITAN AREA. THERE ARE MANY OTHER SIMILAR PROPRIETARY PRODUCTS ON THE MARKET. UDFCD NEITHER NDORSES NOR DISCOURAGES USE OF PROPRIETARY PROTECTION PRODUCTS; HOWEVER, IN THE EVENT PROPRIETARY METHODS ARE USED, THE APPROPRIATE DETAIL FROM THE MANUFACTURER MUST BE INCLUDED IN THE SWMP AND THE BMP MUST BE INSTALLED AND MAINTAINED AS SHOWN IN THE MANUFACTURER'S DETAILS.

Inlet Protection (IP) SC-6

Description

Inlet protection consists of permeable barriers installed around an inlet to filter runoff and remove sediment prior to entering a storm drain inlet. Inlet protection can be constructed from rock socks, sediment control logs, silt fence, block and rock socks, or other materials approved by the local jurisdiction. Area inlets can also be protected by over-excavating around the inlet to form a sediment trap.

Photograph IP-1. Inlet protection for a curb opening inlet.

Appropriate Uses

Install protection at storm sewer inlets that are operable during construction. Consider the potential for tracked-out sediment or temporary stockpile areas to contribute sediment to inlets when determining which inlets must be protected. This may include inlets in the general proximity of the construction area, not limited to downgradient inlets. Inlet protection is not a stand-alone BMP and should be used in conjunction with other upgradient BMPs.

Design and Installation

To function effectively, inlet protection measures must be installed to ensure that flows do not bypass the inlet protection and enter the storm drain without treatment. However, designs must also enable the inlet to function without completely blocking flows into the inlet in a manner that causes localized flooding. When selecting the type of inlet protection, consider factors such as type of inlet (e.g., curb or area, sump or on-grade conditions), traffic, anticipated flows, ability to secure the BMP properly, safety and other site-specific conditions. For example, block and rock socks will be better suited to a curb and gutter along a roadway, as opposed to silt fence or sediment control logs, which cannot be properly secured in a curb and gutter setting, but are effective area inlet protection measures.

Several inlet protection designs are provided in the Design Details. Additionally, a variety of proprietary products are available for inlet protection that may be approved for use by local governments. If proprietary products are used, design details and installation procedures from the manufacturer must be followed. Regardless of the type of inlet protection selected, inlet protection is most effective when combined with other BMPs such as curb socks and check dams. Inlet protection is often the last barrier before runoff enters the storm sewer or receiving water.

Design details with notes are provided for these forms of inlet protection:

IP-1. Block and Rock Sock Inlet Protection for Sump or On-grade Inlets

IP-2. Curb (Rock) Socks Upstream of Inlet Protection, On-grade Inlets

Inlet Protection (various forms)	
Functions	
Erosion Control	No
Sediment Control	Yes
Site/Material Management	No

IP-3. Rock Sock Inlet Protection for Sump/Area Inlet

IP-4. Silt Fence Inlet Protection for Sump/Area Inlet

IP-5. Over-excavation Inlet Protection

IP-6. Straw Bale Inlet Protection for Sump/Area Inlet

CIP-1. Culvert Inlet Protection

Propriety inlet protection devices should be installed in accordance with manufacturer specifications.

More information is provided below on selecting inlet protection for sump and on-grade locations.

Inlets Located in a Sump

When applying inlet protection in sump conditions, it is important that the inlet continue to function during larger runoff events. For curb inlets, the maximum height of the protective barrier should be lower than the top of the curb opening to allow overflow into the inlet during larger storms without excessive localized flooding. If the inlet protection height is greater than the curb elevation, particularly if the filter becomes clogged with sediment, runoff will not enter the inlet and may bypass it, possibly causing localized flooding, public safety issues, and downstream erosion and damage from bypassed flows.

Area inlets located in a sump setting can be protected through the use of silt fence, concrete block and rock socks (on paved surfaces), sediment control logs/straw wattles embedded in the adjacent soil and stacked around the area inlet (on pervious surfaces), over-excavation around the inlet, and proprietary products providing equivalent functions.

Inlets Located on a Slope

For curb and gutter inlets on paved sloping streets, block and rock sock inlet protection is recommended in conjunction with curb socks in the gutter leading to the inlet. For inlets located along unpaved roads, also see the Check Dam Fact Sheet.

Maintenance and Removal

Inspect inlet protection frequently. Inspection and maintenance guidance includes:

- Inspect for tears that can result in sediment directly entering the inlet, as well as result in the contents of the BMP (e.g., gravel) washing into the inlet.
- Check for improper installation resulting in untreated flows bypassing the BMP and directly entering the inlet or bypassing to an unprotected downstream inlet. For example, silt fence that has not been properly trenched around the inlet can result in flows under the silt fence and directly into the inlet.
- Look for displaced BMPs that are no longer protecting the inlet. Displacement may occur following larger storm events that wash away or reposition the inlet protection. Traffic or equipment may also crush or displace the BMP.
- Monitor sediment accumulation upgradient of the inlet protection.

- Remove sediment accumulation from the area upstream of the inlet protection, as needed to maintain BMP effectiveness, typically when it reaches no more than half the storage capacity of the inlet protection. For silt fence, remove sediment when it accumulates to a depth of no more than 6 inches. Remove sediment accumulation from the area upstream of the inlet protection as needed to maintain the functionality of the BMP.

- Propriety inlet protection devices should be inspected and maintained in accordance with manufacturer specifications. If proprietary inlet insert devices are used, sediment should be removed in a timely manner to prevent devices from breaking and spilling sediment into the storm drain.

Inlet protection must be removed and properly disposed of when the drainage area for the inlet has reached final stabilization.

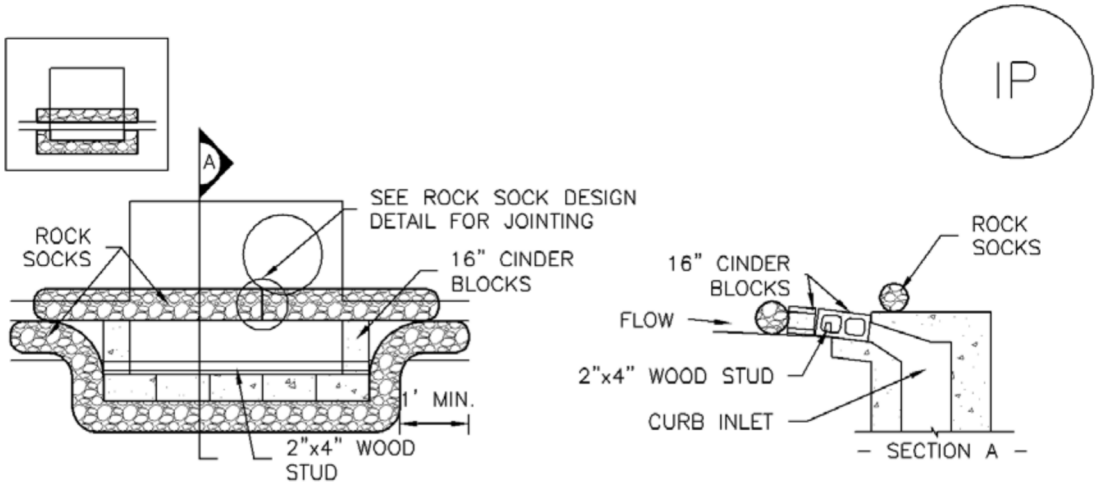

IP–1. BLOCK AND ROCK SOCK SUMP OR ON GRADE INLET PROTECTION

BLOCK AND CURB SOCK INLET PROTECTION INSTALLATION NOTES

1. SEE ROCK SOCK DESIGN DETAIL FOR INSTALLATION REQUIREMENTS.

2. CONCRETE "CINDER" BLOCKS SHALL BE LAID ON THEIR SIDES AROUND THE INLET IN A SINGLE ROW, ABUTTING ONE ANOTHER WITH THE OPEN END FACING AWAY FROM THE CURB.

3. GRAVEL BAGS SHALL BE PLACED AROUND CONCRETE BLOCKS, CLOSELY ABUTTING ONE ANOTHER AND JOINTED TOGETHER IN ACCORDANCE WITH ROCK SOCK DESIGN DETAIL.

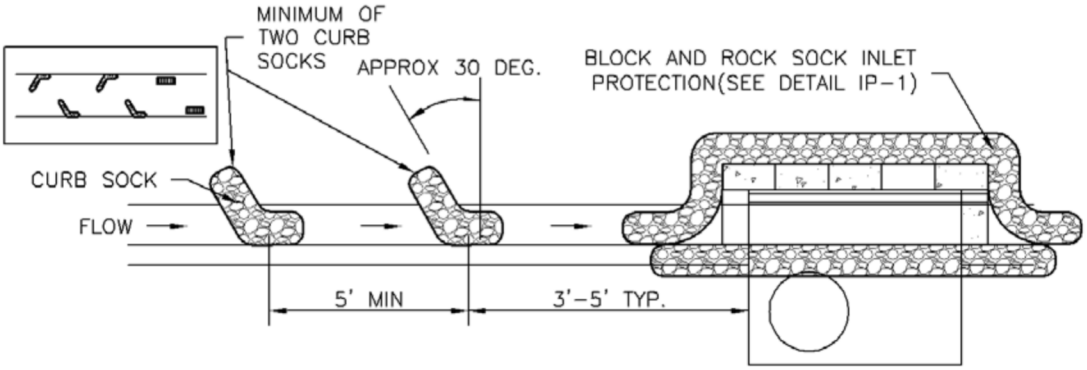

IP–2. CURB ROCK SOCKS UPSTREAM OF INLET PROTECTION

CURB ROCK SOCK INLET PROTECTION INSTALLATION NOTES

1. SEE ROCK SOCK DESIGN DETAIL INSTALLATION REQUIREMENTS.

2. PLACEMENT OF THE SOCK SHALL BE APPROXIMATELY 30 DEGREES FROM PERPENDICULAR IN THE OPPOSITE DIRECTION OF FLOW.

3. SOCKS ARE TO BE FLUSH WITH THE CURB AND SPACED A MINIMUM OF 5 FEET APART.

4. AT LEAST TWO CURB SOCKS IN SERIES ARE REQUIRED UPSTREAM OF ON–GRADE INLETS.

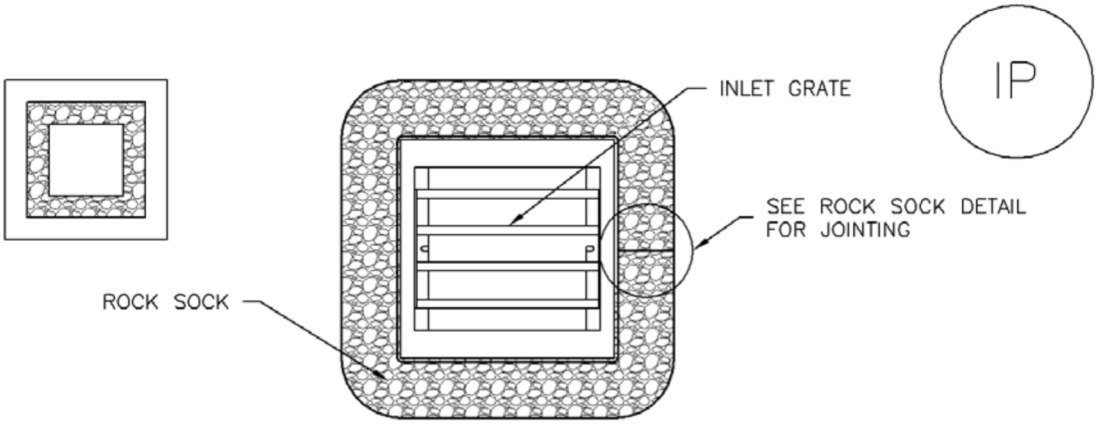

IP–3. ROCK SOCK SUMP/AREA INLET PROTECTION

ROCK SOCK SUMP/AREA INLET PROTECTION INSTALLATION NOTES

1. SEE ROCK SOCK DESIGN DETAIL FOR INSTALLATION REQUIREMENTS.

2. STRAW WATTLES/SEDIMENT CONTROL LOGS MAY BE USED IN PLACE OF ROCK SOCKS FOR INLETS IN PERVIOUS AREAS. INSTALL PER SEDIMENT CONTROL LOG DETAIL.

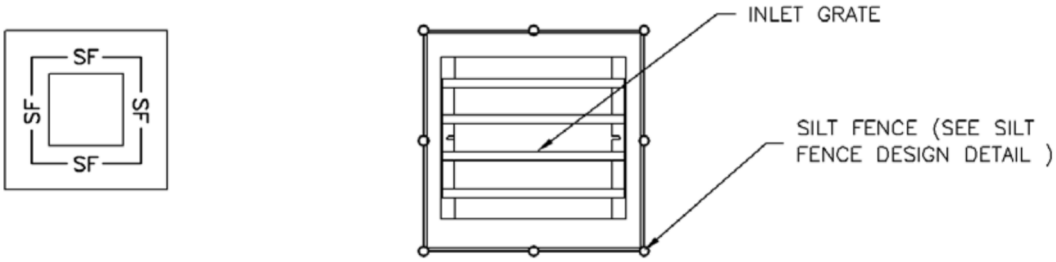

IP–4. SILT FENCE FOR SUMP INLET PROTECTION

SILT FENCE INLET PROTECTION INSTALLATION NOTES

1. SEE SILT FENCE DESIGN DETAIL FOR INSTALLATION REQUIREMENTS.

2. POSTS SHALL BE PLACED AT EACH CORNER OF THE INLET AND AROUND THE EDGES AT A MAXIMUM SPACING OF 3 FEET.

3. STRAW WATTLES/SEDIMENT CONTROL LOGS MAY BE USED IN PLACE OF SILT FENCE FOR INLETS IN PERVIOUS AREAS. INSTALL PER SEDIMENT CONTROL LOG DETAIL.

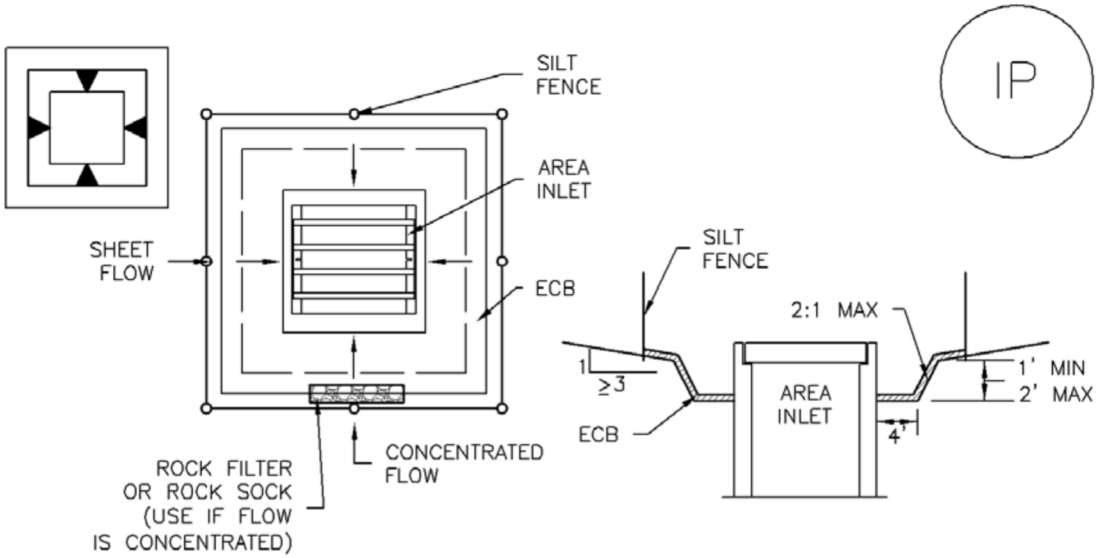

IP–5. OVEREXCAVATION INLET PROTECTION

OVEREXCAVATION INLET PROTECTION INSTALLATION NOTES

1. THIS FORM OF INLET PROTECTION IS PRIMARILY APPLICABLE FOR SITES THAT HAVE NOT YET REACHED FINAL GRADE AND SHOULD BE USED ONLY FOR INLETS WITH A RELATIVELY SMALL CONTRIBUTING DRAINAGE AREA.

2. WHEN USING FOR CONCENTRATED FLOWS, SHAPE BASIN IN 2:1 RATIO WITH LENGTH ORIENTED TOWARDS DIRECTION OF FLOW.

3. SEDIMENT MUST BE PERIODICALLY REMOVED FROM THE OVEREXCAVATED AREA.

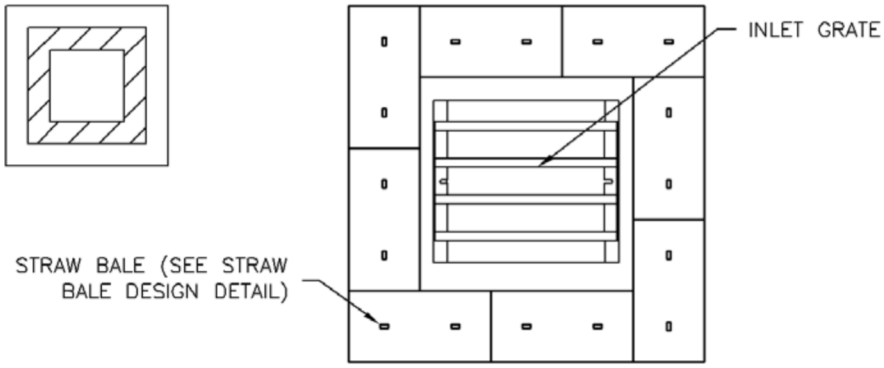

IP–6. STRAW BALE FOR SUMP INLET PROTECTION

STRAW BALE BARRIER INLET PROTECTION INSTALLATION NOTES

1. SEE STRAW BALE DESIGN DETAIL FOR INSTALLATION REQUIREMENTS.

2. BALES SHALL BE PLACED IN A SINGLE ROW AROUND THE INLET WITH ENDS OF BALES TIGHTLY ABUTTING ONE ANOTHER.

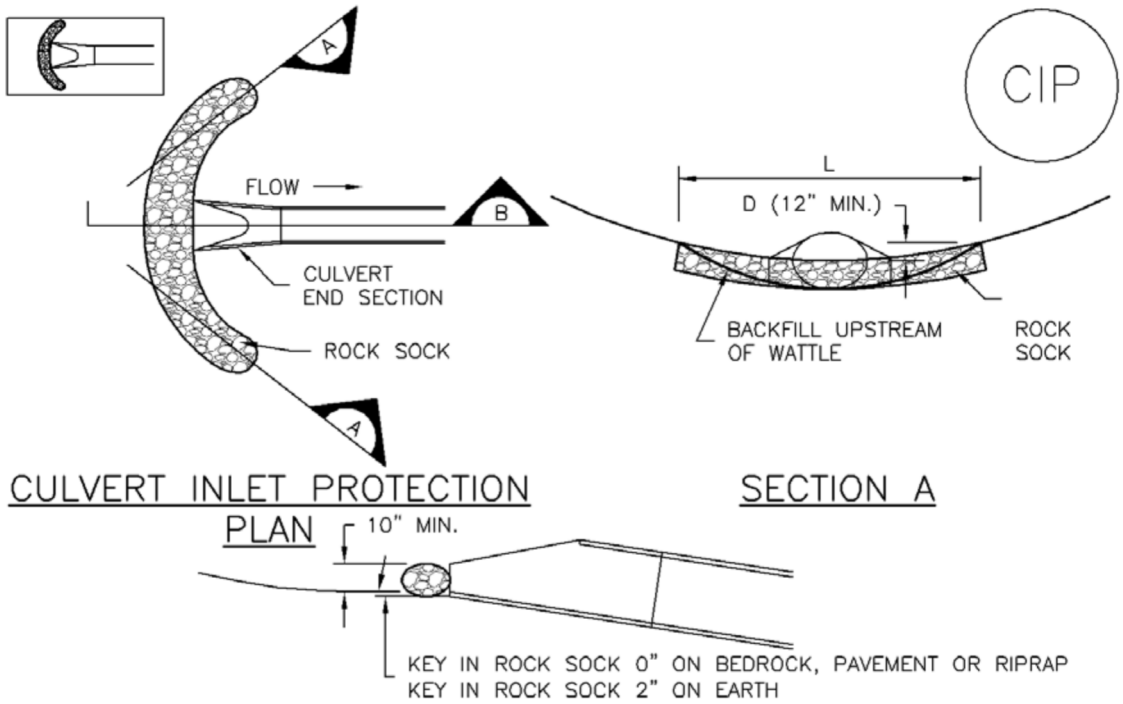

CIP–1. CULVERT INLET PROTECTION

CULVERT INLET PROTECTION INSTALLATION NOTES

1. SEE PLAN VIEW FOR
   –LOCATION OF CULVERT INLET PROTECTION.

2. SEE ROCK SOCK DESIGN DETAIL FOR ROCK GRADATION REQUIREMENTS AND JOINTING DETAIL.

CULVERT INLET PROTECTION MAINTENANCE NOTES

1. INSPECT BMPs EACH WORKDAY, AND MAINTAIN THEM IN EFFECTIVE OPERATING CONDITION. MAINTENANCE OF BMPs SHOULD BE PROACTIVE, NOT REACTIVE. INSPECT BMPs AS SOON AS POSSIBLE (AND ALWAYS WITHIN 24 HOURS) FOLLOWING A STORM THAT CAUSES SURFACE EROSION, AND PERFORM NECESSARY MAINTENANCE.

2. FREQUENT OBSERVATIONS AND MAINTENANCE ARE NECESSARY TO MAINTAIN BMPs IN EFFECTIVE OPERATING CONDITION. INSPECTIONS AND CORRECTIVE MEASURES SHOULD BE DOCUMENTED THOROUGHLY.

3. WHERE BMPs HAVE FAILED, REPAIR OR REPLACEMENT SHOULD BE INITIATED UPON DISCOVERY OF THE FAILURE.

4. SEDIMENT ACCUMULATED UPSTREAM OF THE CULVERT SHALL BE REMOVED WHEN THE SEDIMENT DEPTH IS ½ THE HEIGHT OF THE ROCK SOCK.

5. CULVERT INLET PROTECTION SHALL REMAIN IN PLACE UNTIL THE UPSTREAM DISTURBED AREA IS PERMANENTLY STABILIZED AND APPROVED BY THE LOCAL JURISDICTION.

(DETAILS ADAPTED FROM AURORA, COLORADO, NOT AVAILABLE IN AUTOCAD)

NOTE: MANY JURISDICTIONS HAVE BMP DETAILS THAT VARY FROM UDFCD STANDARD DETAILS. CONSULT WITH LOCAL JURISDICTIONS AS TO WHICH DETAIL SHOULD BE USED WHEN DIFFERENCES ARE NOTED.

GENERAL INLET PROTECTION INSTALLATION NOTES

1. SEE PLAN VIEW FOR:
   - LOCATION OF INLET PROTECTION.
   - TYPE OF INLET PROTECTION (IP.1, IP.2, IP.3, IP.4, IP.5, IP.6)

2. INLET PROTECTION SHALL BE INSTALLED PROMPTLY AFTER INLET CONSTRUCTION OR PAVING IS COMPLETE (TYPICALLY WITHIN 48 HOURS). IF A RAINFALL/RUNOFF EVENT IS FORECAST, INSTALL INLET PROTECTION PRIOR TO ONSET OF EVENT.

3. MANY JURISDICTIONS HAVE BMP DETAILS THAT VARY FROM UDFCD STANDARD DETAILS. CONSULT WITH LOCAL JURISDICTIONS AS TO WHICH DETAIL SHOULD BE USED WHEN DIFFERENCES ARE NOTED.

INLET PROTECTION MAINTENANCE NOTES

1. INSPECT BMPs EACH WORKDAY, AND MAINTAIN THEM IN EFFECTIVE OPERATING CONDITION. MAINTENANCE OF BMPs SHOULD BE PROACTIVE, NOT REACTIVE. INSPECT BMPs AS SOON AS POSSIBLE (AND ALWAYS WITHIN 24 HOURS) FOLLOWING A STORM THAT CAUSES SURFACE EROSION, AND PERFORM NECESSARY MAINTENANCE.

2. FREQUENT OBSERVATIONS AND MAINTENANCE ARE NECESSARY TO MAINTAIN BMPs IN EFFECTIVE OPERATING CONDITION. INSPECTIONS AND CORRECTIVE MEASURES SHOULD BE DOCUMENTED THOROUGHLY.

3. WHERE BMPs HAVE FAILED, REPAIR OR REPLACEMENT SHOULD BE INITIATED UPON DISCOVERY OF THE FAILURE.

4. SEDIMENT ACCUMULATED UPSTREAM OF INLET PROTECTION SHALL BE REMOVED AS NECESSARY TO MAINTAIN BMP EFFECTIVENESS, TYPICALLY WHEN STORAGE VOLUME REACHES 50% OF CAPACITY, A DEPTH OF 6" WHEN SILT FENCE IS USED, OR ¼ OF THE HEIGHT FOR STRAW BALES.

5. INLET PROTECTION IS TO REMAIN IN PLACE UNTIL THE UPSTREAM DISTURBED AREA IS PERMANENTLY STABILIZED, UNLESS THE LOCAL JURISDICTION APPROVES EARLIER REMOVAL OF INLET PROTECTION IN STREETS.

6. WHEN INLET PROTECTION AT AREA INLETS IS REMOVED, THE DISTURBED AREA SHALL BE COVERED WITH TOP SOIL, SEEDED AND MULCHED, OR OTHERWISE STABILIZED IN A MANNER APPROVED BY THE LOCAL JURISDICTION.

(DETAIL ADAPTED FROM TOWN OF PARKER, COLORADO AND CITY OF AURORA, COLORADO, NOT AVAILABLE IN AUTOCAD)

NOTE: MANY JURISDICTIONS HAVE BMP DETAILS THAT VARY FROM UDFCD STANDARD DETAILS. CONSULT WITH LOCAL JURISDICTIONS AS TO WHICH DETAIL SHOULD BE USED WHEN DIFFERENCES ARE NOTED.

NOTE: THE DETAILS INCLUDED WITH THIS FACT SHEET SHOW COMMONLY USED, CONVENTIONAL METHODS OF INLET PROTECTION IN THE DENVER METROPOLITAN AREA. THERE ARE MANY PROPRIETARY INLET PROTECTION METHODS ON THE MARKET. UDFCD NEITHER ENDORSES NOR DISCOURAGES USE OF PROPRIETARY INLET PROTECTION; HOWEVER, IN THE EVENT PROPRIETARY METHODS ARE USED, THE APPROPRIATE DETAIL FROM THE MANUFACTURER MUST BE INCLUDED IN THE SWMP AND THE BMP MUST BE INSTALLED AND MAINTAINED AS SHOWN IN THE MANUFACTURER'S DETAILS.

NOTE: SOME MUNICIPALITIES DISCOURAGE OR PROHIBIT THE USE OF STRAW BALES FOR INLET PROTECTION. CHECK WITH LOCAL JURISDICTION TO DETERMINE IF STRAW BALE INLET PROTECTION IS ACCEPTABLE.

Extended Detention Basin (EDB)—Sedimentation Facility

Description

An extended detention basin (EDB) is a sedimentation basin designed to totally drain dry sometime after stormwater runoff ends. It is an adaptation of a detention basin used for flood control. The primary difference is in the outlet design. The EDB uses a much smaller outlet that extends the emptying time of the more frequently occurring runoff events to facilitate pollutant removal. The EDB's drain time for the brim-full water quality capture volume (i.e., time to fully evacuate the design capture volume) of 40 hours is recommended to remove a significant portion of fine particulate pollutants found in urban stormwater runoff. Soluble pollutant removal can be somewhat enhanced by providing a small wetland marsh or ponding area in the basin's bottom to promote biological uptake. The basins are considered to be "dry" because they are designed not to have a significant permanent pool of water remaining between storm runoff events. However, EDB may develop wetland vegetation and sometimes shallow pools in the bottom portions of the facilities.

General Application

An EDB can be used to enhance stormwater runoff quality and reduce peak stormwater runoff rates. If these basins are constructed early in the development cycle, they can also be used to trap sediment from construction activities within the tributary drainage area. The accumulated sediment, however, will need to be removed after upstream land disturbances cease and before the basin is placed into final long-term use. Also, an EDB can sometimes be retrofitted into existing flood control detention basins.

EDBs can be used to improve the quality of urban runoff from roads, parking lots, residential neighborhoods, commercial areas, and industrial sites and are generally used for regional or

follow-up treatment. They can also be used as an onsite BMP and work well in conjunction with other BMPs, such as upstream onsite source controls and downstream infiltration/filtration basins or wetland channels. If desired, a flood routing detention volume can be provided above the water quality capture volume (WQCV) of the basin.

Advantages/Disadvantages

General

An EDB can be designed to provide other benefits such as recreation and open space opportunities in addition to reducing peak runoff rates and improving water quality. They are effective in removing particulate matter and the associated heavy metals and other pollutants. As with other BMPs, safety issues need to be addressed through proper design.

Physical Site Suitability

Normally, the land required for an EDB is approximately 0.5 to 2.0 percent of the total tributary development area. In high groundwater areas, consider the use of retention ponds (RP) instead in order to avoid many of the problems that can occur when the EDB's bottom is located below the seasonal high water table. Soil maps should be consulted, and soil borings may be needed to establish design geotechnical parameters.

Pollutant Removal

The pollutant removal range of an EDB was presented in section 4.1, Table ND-2. Removal of suspended solids and metals can be moderate to high, and removal of nutrients is low to moderate. The removal of nutrients can be improved when a small shallow pool or wetland is included as part of the basin's bottom or the basin is followed by BMPs more efficient at removing soluble pollutants, such as a filtration system, constructed wetlands or wetland channels.

The major factor controlling the degree of pollutant removal is the emptying time provided by the outlet. The rate and degree of removal will also depend on influent particle sizes. Metals, oil and grease, and some nutrients have a close affinity for suspended sediment and will be removed partially through sedimentation.

Aesthetics and Multiple Uses

Since an EDB is designed to drain very slowly, its bottom and lower portions will be inundated frequently for extended periods of time. Grasses in this frequently inundated zone will tend to die off, with only the species that can survive the specific environment at each site eventually prevailing. In addition, the bottom will be the depository of all the sediment that settles out in the basin. As a result, the bottom can be muddy and may have an undesirable appearance to some. To reduce this problem and to improve the basin's availability for other uses (such as open space, habitat or passive recreation), it is suggested that the designer provide a lower-stage basin as suggested in the Two Stage Design procedure. As an alternative, a retention pond (RP) could be used, in which the settling occurs primarily within the permanent pool.

Design Considerations

Whenever desirable and feasible, incorporate the EDB within a larger flood control basin. Also, whenever possible try to provide within the basin for other urban uses such as passive recreation, and wildlife habitat. If multiple uses are being contemplated, consider the multiple-stage detention basin to limit inundation of passive recreational areas to one or two occurrences a year. Generally, the area within the WQCV is not well suited for active recreation facilities such as ballparks, playing fields, and picnic areas. These are best located above the WQCV pool level.

Figure EDB-1 shows a representative layout of an EDB. Although flood control storage can be accomplished by providing a storage volume above the water quality storage, how best to accomplish this is not included in this discussion. Whether or not flood storage is provided, all embankments should be protected from catastrophic failure when runoff exceeds the design event. The State Engineer's regulatory requirements for larger dam embankments and storage volumes must be followed whenever regulatory height and/or volume thresholds are exceeded. Below those thresholds, the engineer should design the embankment-spillway-outlet system so that catastrophic failure will not occur.

Perforated outlet and trash rack configurations are illustrated in section 4.3, *Typical Structural Details*. Figure EDB-3 equates the WQCV that needs to be emptied over 40 hours, to the total required area of perforations per row for the standard configurations shown in that section. The chart is based on the rows being equally spaced vertically at 4-inch centers. This total area of perforations per row is then used to determine the number of uniformly sized holes per row (see detail in the *Structural Details* section). One or more perforated columns on a perforated orifice plate integrated into the front of the outlet can be used. Other types of outlets may also be used, provided they control the release of the WQCV in a manner consistent with the drain time requirements and are approved in advance.

Although the soil types beneath the pond seldom prevent the use of this BMP, they should be considered during design. Any potential exfiltration capacity should be considered a short-term characteristic and ignored in the design of the WQCV because exfiltration will decrease over time as the soils clog with fine sediment and as the groundwater beneath the basin develops a mound that surfaces into the basin.

High groundwater should not preclude the use of an EDB. Groundwater, however, should be considered during design and construction, and the outlet design must account for any upstream base flows that enter the basin or that may result from groundwater surfacing within the basin itself.

Stable, all weather access to critical elements of the pond, such as the inlet, outlet, spillway, and sediment collection areas must be provided for maintenance purposes.

Design Procedure and Criteria

The following steps outline the design procedure and criteria for an EDB.

1. Basin Storage Volume

   Provide a storage volume equal to 120 percent of the WQCV based on a 40-hour drain time, above the lowest outlet (i.e., perforation) in the basin. The additional 20 percent of storage volume provides for sediment accumulation and the resultant loss in storage volume.

   A. Determine the WQCV tributary catchment's percent imperviousness. Account for the effects of DCIA, if any, on Effective Imperviousness. Using Figure ND-1, determine the reduction in impervious area to use with WQCV calculations.

   B. Find the required storage volume (watershed inches of runoff):

      Determine the required WQCV (watershed inches of runoff) using Figure EDB-2, based on the EDB's 40-hour drain time.

      Calculate the Design Volume in acre-feet as follows:

$$Design\ Volume = \left(\frac{WQCV}{12}\right) * Area * 1.2$$

      In which:

      Area = The watershed area tributary to the extended detention pond.

      1.2 factor = Multiplier of 1.2 to account for the additional 20 percent of required storage for sediment accumulation.

2. Outlet Works

   The Outlet Works are to be designed to release the WQCV (i.e., not the "Design Volume") over a 40-hour period, with no more than 50 percent of the WQCV being released in 12 hours. Refer to the *Structural Details* section for schematics pertaining to structure geometry; grates, trash racks, and screens; outlet type: orifice plate or perforated riser pipe; cutoff collar size and location; and all other necessary components.

   For a perforated outlet, use Figure EDB-3 to calculate the required area per row based on WQCV and the depth of perforations at the outlet. See the *Structural Details* section to determine the appropriate perforation geometry and number of rows. (The lowest perforations should be set at the water surface elevation of the outlet micropool.) The total outlet area can then be calculated by multiplying the area per row by the number of rows.

3. Trash Rack

Provide a trash rack of sufficient size to prevent clogging of the primary water quality outlet. Size the rack so as not to interfere with the hydraulic capacity of the outlet. Using the total outlet area and the selected perforation diameter (or height), Figures 6, 6a or 7 in the *Structural Details* section will help to determine the minimum open area required for the trash rack. If a perforated vertical plate or riser is used as suggested in this manual, use one-half of the total outlet area to calculate the trash rack's size. This accounts for the variable inundation of the outlet orifices. Figures 6 and 6a were developed as suggested standardized outlet designs for smaller sites.

4. Basin Shape

Shape the pond whenever possible with a gradual expansion from the inlet and a gradual contraction toward the outlet, thereby minimizing short circuiting. The basin length to width ratio between the inlet and the outlet should be between 2:1 to 3:1, with the larger being preferred. It may be necessary to modify the inlet and outlet points through the use of pipes, swales, or channels to accomplish this.

5. Two-Stage Design

A two-stage design with a pool that fills often with frequently occurring runoff minimizes standing water and sediment deposition in the remainder of the basin. The two stages are as follows:

A. Top Stage: The top stage should be 2 or more feet deep with its bottom sloped at 2 percent toward the low flow channel.

B. Bottom Stage: The active storage basin of the bottom stage should be 1.5 to 3 feet deeper than the top stage and store 5 to 15 percent of the WQCV. Provide a micro-pool below the bottom active storage volume of the lower stage at the outlet point. The pool should be ½ the depth of the upper WQCV depth or 2.5 feet, whichever is the larger.

6. Low-Flow Channel

Conveys low flows from the forebay to the bottom stage. Erosion protection should be provided where the low-flow channel enters bottom stage. Lining the low flow channel with concrete is recommended. Otherwise line its sides with VL Type riprap and bottom with concrete. Make it at least 9 inches deep; at a minimum provide capacity equal to twice the release capacity at the upstream forebay outlet.

7. Basin Side Slopes

Basin side slopes should be stable and gentle to facilitate maintenance and access. Side slopes should be no steeper than 3:1, the flatter, the better and safer.

8. Dam Embankment	The embankment should be designed not to fail during a 100-year and larger storms. Embankment slopes should be no steeper than 3:1, preferably 4:1 or flatter, and planted with turf forming grasses. Poorly compacted native soils should be excavated and replaced. Embankment soils should be compacted to at least 95 percent of their maximum density according to ASTM D 698-70 (Modified Proctor). Spillway structures and overflows should be designed in accordance with the City of Colorado Springs and El Paso County Drainage Criteria Manual and should consider UDFCD drop-structure design guidelines.
9. Vegetation	Bottom vegetation provides erosion control and sediment entrapment. Pond bottom, berms, and side sloping areas may be planted with native grasses or with irrigated turf, depending on the local setting.
10. Access	All weather stable access to the bottom, forebay, and outlet works area shall be provided for maintenance vehicles. Maximum grades should be 10 percent with a solid driving surface of gravel, rock, or concrete.
11. Inlet	Dissipate flow energy at pond's inflow point(s) to limit erosion and promote particle sedimentation. Inlets should be designed in accordance with the City of Colorado Springs and El Paso County Drainage Criteria Manual's drop structure criteria or another type of energy dissipating structure.
12. Forebay Design	Provide the opportunity for larger particles to settle out in the inlet in an area that has a solid surface bottom to facilitate mechanical sediment removal. A rock berm should be constructed between the forebay and the main EDB. The forebay volume of the permanent pool should be 5 to 10 percent of the design water quality capture volume. A pipe throughout the berm to convey water the EDB should be offset from the inflow streamline to prevent short circuiting and should be sized to drain the forebay volume in 5 minutes.
13. Flood Storage	Combining the water quality facility with a flood control facility is recommended. The 10-year, 100-year, or other floods may be detained above the WQCV. See the *New Development Planning* section of this chapter for further guidance.
14. Multiple Uses	Whenever desirable and feasible, incorporate the EDB within a larger flood control basin. Also, whenever possible try to provide for other urban uses such as active or passive recreation, and wildlife habitat. If multiple uses are being contemplated, use the multiple-stage detention basin to limit inundation of passive recreational areas to one or two occurrences a year. Generally, the

area within the WQCV is not well suited for active recreation facilities such as ballparks, playing fields, and picnic areas. These are best located above the EDB level.

Design Example

Design forms that provide a means of documenting the design procedure are included in the *Design Forms* section. A completed form follows as a design example.

Maintenance Recommendations

Extended detention basins have low to moderate maintenance requirements. Routine and nonroutine maintenance is necessary to assure performance, enhance aesthetics, and protect structural integrity. The dry basins can result in nuisance complaints if not properly designed or maintained. Bio-degradable pesticides may be required to limit insect problems. Frequent debris removal and grass-mowing can reduce aesthetic complaints. If a shallow wetland or marshy area is included, mosquito breeding and nuisance odors could occur if the water becomes stagnant. Access to critical elements of the pond (inlet, outlet, spillway, and sediment collection areas) must be provided. The basic elements of the maintenance requirements are presented in Table EDB-1.

TABLE EDB-1
Extended Detention Basin Maintenance Considerations

Required Action	Maintenance Objective	Frequency of Action
Lawn mowing and lawn care	Occasional mowing to limit unwanted vegetation. Maintain irrigated turf grass as 2 to 4 inches tall and nonirrigated native turf grasses at 4 to 6 inches.	Routine – Depending on aesthetic requirements.
Debris and litter removal	Remove debris and litter from the entire pond to minimize outlet clogging and improve aesthetics.	Routine – Including just before annual storm seasons (that is, April and May) and following significant rainfall events.
Erosion and sediment control	Repair and revegetate eroded areas in the basin and channels.	Nonroutine – Periodic and repair as necessary based on inspection.
Structural	Repair pond inlets, outlets, forebays, low flow channel liners, and energy dissipators whenever damage is discovered.	Nonroutine – Repair as needed based on regular inspections.
Inspections	Inspect basins to insure that the basin continues to function as initially intended. Examine the outlet for clogging, erosion, slumping, excessive sedimentation levels, overgrowth, embankment and spillway integrity, and damage to any structural element.	Routine – Annual inspection of hydraulic and structural facilities. Also check for obvious problems during routine maintenance visits, especially for plugging of outlets.
Nuisance control	Address odor, insects, and overgrowth issues associated with stagnant or standing water in the bottom zone.	Nonroutine – Handle as necessary per inspection or local complaints.

TABLE EDB-1
Extended Detention Basin Maintenance Considerations

Required Action	Maintenance Objective	Frequency of Action
Sediment removal	Remove accumulated sediment from the forebay, micro-pool, and the bottom of the basin.	Nonroutine – Performed when sediment accumulation occupies 20 percent of the WQCV. This may vary considerably, but expect to do this every 10 to 20 years, as necessary per inspection if no construction activities take place in the tributary watershed. More often if they do. The forebay and the micro-pool will require more frequent cleanout than other areas of the basin, say every 1 or 2 years.

1. DESCRIPTION:

Hydraulically Applied Mulch is an interim and permanent stabilization control measure that consists of using hydroseeding equipment to apply a uniform layer of natural fibers and adhesive-like compounds over disturbed construction areas. Hydroseeding immediately protects disturbed areas from rainfall impacts, excessive infiltration, and wind erosion until permanent vegetation is stablished.

2. CONTROL MEASURE OBJECTIVES

☒ Erosion Control
☐ Sediment Control
☐ Site/Materials Management

3. RELEVANT SPECIFICATION SECTIONS

Section 213 - Mulching

a) *213.02.(a)/(c)/(f)* - Materials
b) *213.03.(a)/(d)/(g)* - Construction Requirements
c) *213.04* - Method of Measurement
d) *213.05* - Basis of Payment

4. RELEVANT M-STANDARD DETAILS

Section not applicable for this control measure.

5. BASIS OF PAYMENT

Pay item	Description	Pay Unit
213-00150	Bonded Fiber Matrix	ACRE
213-00151	Bonded Fiber Matrix	LB
213-00012	Spray-on Mulch Blanket	ACRE
213-00013	Spray-on Mulch Blanket	LB

6. APPLICATIONS

- Hydraulically applied mulch along with seeding will protect and stabilize disturbed soil.
- Cover disturbed areas for extended periods, only as interim stabilization, when season does not allow for effective immediate seeding operations.
- It can help retain moisture, aid seed germination, and moderate soil temperatures.

Hydromulch on disturbed side slope

- It is more efficient than hand application of mulch for large-scale projects.
- Low potential of introduction of seeds from manufactured product.

7. LIMITATIONS

- Some products require at least 24 hours drying time before any precipitation to work effectively.
- Do not use in areas of channelized or concentrated flows.

8. SOILS TRIANGLE

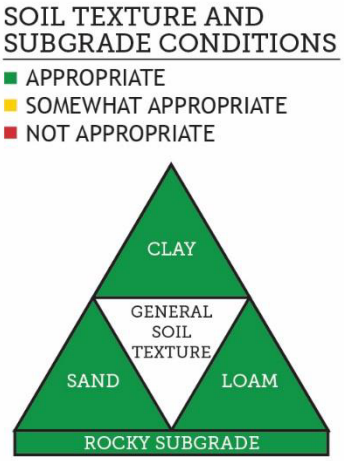

9. SWMP ADMINISTRATOR FOR DESIGN CRITERIA

- Low potential of introducing seeds from manufactured product for sensitive areas.
- Very effective in areas using imprinting or roughened surfaces (micrograding) as a permanent stabilization strategy.
- Hydraulically applied mulch is best used on dry 2H:1V slopes or flatter.
- Hydraulically applied mulch is not effective when used on saturated soils, areas with seeps, or seasonal springs.
- Due to the high cost associated with equipment mobilization; projects with less than 0.2 acres of disturbance should consider using Soil Retention Blankets instead of Mulching (Hydraulically Applied).

10. INSTALLATION CRITERIA

- Hydraulically applied mulch shall be supplied in a premixed condition by the manufacturer with adhesive-like compounds. Only water should be added in the field.
- Add water to meet the manufacturer's specification, instruction or recommendations, for uniform spread over the seeded area.
- Evenly distribute mulch to cover the entire exposed soil surface.
- Apply from multiple angles to prevent shadow areas.
- Test a small area with hydraulically applied mulch for approval prior to large-scale application.
- Avoid mulch overspray onto the traveled way, sidewalks, lined drainage channels, and existing vegetation.
- Mixing of seed and/or fertilizer with the hydraulically applied mulch products is not an acceptable installation practice for CDOT projects

11. MAINTENANCE AND REMOVAL

- Visually inspect at regular intervals and after every storm event to ensure mulch meets required coverage.
- Spread and hydrate granular hydraulic mulch products in small areas requiring repair from minor damage (e.g., construction traffic and drilling).
- Re-apply hydraulic mulch as needed over failed areas (e.g., large slopes after storm event) throughout the construction period to ensure continuous coverage.
- Mulching does not need to be removed as it will biodegrade with time.

1. DESCRIPTION:

This control measure practice involves the establishment of a permanent, perennial vegetative cover over areas disturbed during construction activities. The main goal of seeding is to stabilize the soil, reduce wind and water erosion, minimize sheet flow and rill erosion, increase infiltration rates, and reduce overall surface runoff.

2. CONTROL MEASURE OBJECTIVES

☒ Erosion Control
☒ Sediment Control
☐ Site/Materials Management

3. RELEVANT SPECIFICATION SECTIONS

Section 212 – Seeding, Fertilizer, Soil Conditioner, and Sodding
Section 207 – Topsoil

4. RELEVANT M-STANDARD DETAILS

Section not applicable for this control measure.

5. BASIS OF PAYMENT

Pay Item	Description	Pay Unit
212-00005	Seeding (Native)	LB
212-00006	Seeding (Native)	ACRE
212-00007	Seeding (Native)(Hydraulic)	ACRE
212-00009	Seeding (Temporary)	ACRE
212-00010	Seeding (Lawn)	LB
212-00011	Seeding (Lawn)	ACRE
212-00015	Seeding (Forbs)	LB
212-00020	Seeding (Forbs)	OZ
212-00022	Seeding (Riparian)	ACRE
212-00025	Seeding (Shrubs)	LB
212-00027	Seeding (Trees)	LB
212-00028	Seeding (Wetlands)	ACRE
212-00009	Seeding (Temporary)	ACRE

Drill SeederCalibration

6. APPLICATIONS

- Used as part of the permanent stabilization steps for disturbed areas after construction activities are completed.
- Used only after topsoil has been dispersed on the site and soil conditioning amendments are applied.

7. LIMITATIONS

- Permanent stabilization seeding can only be done in the approved seeding season windows for the different elevation ranges in Colorado.

8. SOILS TRIANGLE

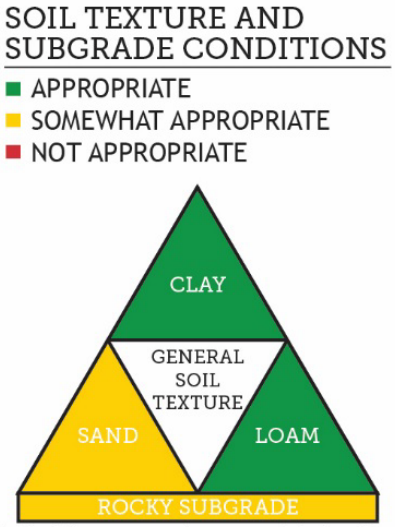

This Control Measure may be appropriate for all soil types with the appropriate installation procedures for topsoil requirements, and other considerations as directed by the Transportation Erosion Control Supervisor or Regional Environmental Staff

9. **SWMP ADMINISTRATOR FOR DESIGN CRITERIA**

- Soil surface preparation must be completed before application of seed.
- To select species for the permanent stabilization see mixes, the Designer should utilize the CDOT Landscape Architecture Section's Native Seed Calculator, found at: https://www.codot.gov/programs/environmental/news/native-seed-calculator
- Topsoil management strategies must be included in the Stormwater Management Plan. These should include locations for the salvaged topsoil as either stock piles or windrow.
- Ground surface should not be compacted nor too loose.
- Temporary seeding consists of planting an annual grass.
- Drill seeding rates for temporary annual grasses are as follows:

Common Name	Botanical Name	Application Time	Seeding Rates (LBS PLS/acre)	Planting Depth (inches)
Oats	Avena sativa	October 1 - May 1	35	1 - 2
Foxtail Millet	Setaria italica	May 2 - September 30	30	1/2 - 3/4

- CDOT has created training videos demonstrating best field practices for landscape architecture pertaining to reclamation, revegetation, and stormwater management to help ensure compliance with CDOT Standard Specifications and CDPHE's regulations for transportation projects. These videos include guidance for:
    - Percent Vegetation Cover
    - Soil Preparation, Ripping and Tilling
    - Composting and Fertilizers
    - Drill Seeding Application Rate
    - Straw Mulching
    - Crimping and Tackifier

  For more information visit the Landscape Architecture Program web page at: https://www.codot.gov/programs/environmental/landscape-architecture

10. **INSTALLATION CRITERIA**

- Drill seeding is the most desirable method.
- Seeding seasons (Section 212.03) must be followed for native seeding.

11. **MAINTENANCE AND REMOVAL**

- Seeded areas require monitoring to ensure successful germination.
- Seeded areas require protection from vehicle and pedestrian traffic

Temporary Outlet Protection (TOP) EC-8

Description

Outlet protection helps to reduce erosion immediately downstream of a pipe, culvert, slope drain, rundown or other conveyance with concentrated, high-velocity flows. Typical outlet protection consists of riprap or rock aprons at the conveyance outlet.

Photograph TOP-1. Riprap outlet protection.

Appropriate Uses

Outlet protection should be used when a conveyance discharges onto a disturbed area where there is potential for accelerated erosion due to concentrated flow. Outlet protection should be provided where the velocity at the culvert outlet exceeds the maximum permissible velocity of the material in the receiving channel.

Note**:** This Fact Sheet and detail are for temporary outlet protection, outlets that are intended to be used for less than 2 years. For permanent, long-term outlet protection, see the *Major Drainage* chapter of Volume 1.

Design and Installation

Design outlet protection to handle runoff from the largest drainage area that may be contributing runoff during construction (the drainage area may change as a result of grading). Key in rock, around the entire perimeter of the apron, to a minimum depth of 6 inches for stability. Extend riprap to the height of the culvert or the normal flow depth of the downstream channel, whichever is less. Additional erosion control measures such as vegetative lining, turf reinforcement mat and/or other channel lining methods may be required downstream of the outlet protection if the channel is susceptible to erosion. See Design Detail OP-1 for additional information.

Maintenance and Removal

Inspect apron for damage and displaced rocks. If rocks are missing or significantly displaced, repair or replace as necessary. If rocks are continuously missing or displaced, consider increasing the size of the riprap or deeper keying of the perimeter.

Remove sediment accumulated at the outlet before the outlet protection becomes buried and ineffective. When sediment accumulation is noted, check that upgradient BMPs, including inlet protection, are in effective operating condition.

Outlet protection may be removed once the pipe is no longer draining an upstream area, or once the downstream area has been sufficiently stabilized. If the drainage pipe is permanent, outlet protection can be left in place; however, permanent outlet protection should be designed and constructed in accordance with the requirements of the *Major Drainage* chapter of Volume 2.

Outlet Protection	
Functions	
Erosion Control	Yes
Sediment Control	Moderate
Site/Material Management	No

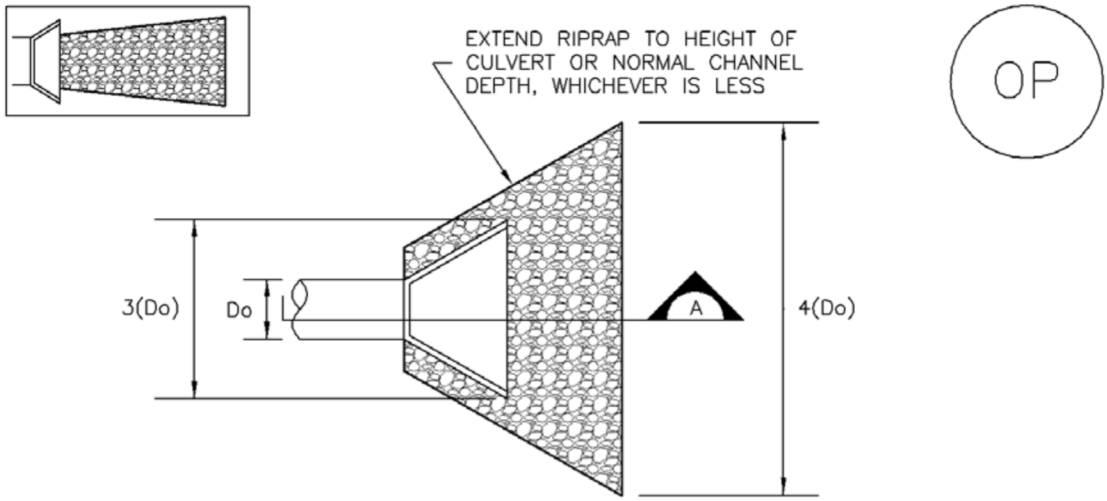

TEMPORARY OUTLET PROTECTION PLAN

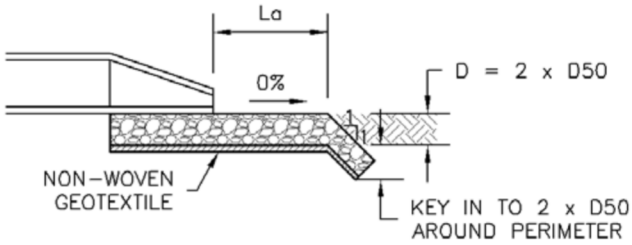

SECTION A

TABLE OP-1. TEMPORARY OUTLET PROTECTION SIZING TABLE			
PIPE DIAMETER, Do (INCHES)	DISCHARGE, Q (CFS)	APRON LENGTH, La (FT)	RIPRAP D50 DIAMETER MIN (INCHES)
8	2.5 5	5 10	4 6
12	5 10	10 13	4 6
18	10 20 30 40	10 16 23 26	6 9 12 16
24	30 40 50 60	16 26 26 30	9 9 12 16

OP-1. TEMPORARY OUTLET PROTECTION

TEMPORARY OUTLET PROTECTION INSTALLATION NOTES

1. SEE PLAN VIEW FOR
   - LOCATION OF OUTLET PROTECTION.
   - DIMENSIONS OF OUTLET PROTECTION.

2. DETAIL IS INTENDED FOR PIPES WITH SLOPE $\leq$ 10%. ADDITIONAL EVALUATION OF RIPRAP SIZING AND OUTLET PROTECTION DIMENSIONS REQUIRED FOR STEEPER SLOPES.

3. TEMPORARY OUTLET PROTECTION INFORMATION IS FOR OUTLETS INTENDED TO BE UTILIZED LESS THAN 2 YEARS.

TEMPORARY OUTLET PROTECTION INSPECTION AND MAINTENANCE NOTES

1. INSPECT BMPs EACH WORKDAY, AND MAINTAIN THEM IN EFFECTIVE OPERATING CONDITION. MAINTENANCE OF BMPs SHOULD BE PROACTIVE, NOT REACTIVE. INSPECT BMPs AS SOON AS POSSIBLE (AND ALWAYS WITHIN 24 HOURS) FOLLOWING A STORM THAT CAUSES SURFACE EROSION, AND PERFORM NECESSARY MAINTENANCE.

2. FREQUENT OBSERVATIONS AND MAINTENANCE ARE NECESSARY TO MAINTAIN BMPs IN EFFECTIVE OPERATING CONDITION. INSPECTIONS AND CORRECTIVE MEASURES SHOULD BE DOCUMENTED THOROUGHLY.

3. WHERE BMPs HAVE FAILED, REPAIR OR REPLACEMENT SHOULD BE INITIATED UPON DISCOVERY OF THE FAILURE.

NOTE: MANY JURISDICTIONS HAVE BMP DETAILS THAT VARY FROM UDFCD STANDARD DETAILS. CONSULT WITH LOCAL JURISDICTIONS AS TO WHICH DETAIL SHOULD BE USED WHEN DIFFERENCES ARE NOTED.

(DETAILS ADAPTED FROM AURORA, COLORADO AND PREVIOUS VERSION OF VOLUME 3, NOT AVAILABLE IN AUTOCAD)

Concrete Washout Area (CWA) MM-1

Description

Concrete waste management involves designating and properly managing a specific area of the construction site as a concrete washout area. A concrete washout area can be created using one of several approaches designed to receive wash water from washing of tools and concrete mixer chutes, liquid concrete waste from dump trucks, mobile batch mixers, or pump trucks. Three basic approaches are available: excavation of a pit in the ground, use of an above ground storage area, or use of prefabricated haul-away concrete washout containers. Surface discharges of concrete washout water from construction sites are prohibited.

Photograph CWA-1. Example of concrete washout area. Note gravel tracking pad for access and sign.

Appropriate Uses

Concrete washout areas must be designated on all sites that will generate concrete wash water or liquid concrete waste from onsite concrete mixing or concrete delivery.

Because pH is a pollutant of concern for washout activities, when unlined pits are used for concrete washout, the soil must have adequate buffering capacity to result in protection of state groundwater standards; otherwise, a liner/containment must be used. The following management practices are recommended to prevent an impact from unlined pits to groundwater:

- The use of the washout site should be temporary (less than 1 year), and
- The washout site should be not be located in an area where shallow groundwater may be present, such as near natural drainages, springs, or wetlands.

Design and Installation

Concrete washout activities must be conducted in a manner that does not contribute pollutants to surface waters or stormwater runoff. Concrete washout areas may be lined or unlined excavated pits in the ground, commercially manufactured prefabricated washout containers, or aboveground holding areas constructed of berms, sandbags or straw bales with a plastic liner.

Although unlined washout areas may be used, lined pits may be required to protect groundwater under certain conditions.

Concrete Washout Area	
Functions	
Erosion Control	No
Sediment Control	No
Site/Material Management	Yes

Do not locate an unlined washout area within 400 feet of any natural drainage pathway or waterbody or within 1,000 feet of any wells or drinking water sources. Even for lined concrete washouts, it is advisable to locate the facility away from waterbodies and drainage paths. If site constraints make these

setbacks infeasible or if highly permeable soils exist in the area, then the pit must be installed with an impermeable liner (16 mil minimum thickness) or surface storage alternatives using prefabricated concrete washout devices or a lined aboveground storage area should be used.

Design details with notes are provided in Detail CWA-1 for pits and CWA-2 for aboveground storage areas. Pre-fabricated concrete washout container information can be obtained from vendors.

Maintenance and Removal

A key consideration for concrete washout areas is to ensure that adequate signage is in place identifying the location of the washout area. Part of inspecting and maintaining washout areas is ensuring that adequate signage is provided and in good repair and that the washout area is being used, as opposed to washout in non-designated areas of the site.

Remove concrete waste in the washout area, as needed to maintain BMP function (typically when filled to about two-thirds of its capacity). Collect concrete waste and deliver offsite to a designated disposal location.

Upon termination of use of the washout site, accumulated solid waste, including concrete waste and any contaminated soils, must be removed from the site to prevent on-site disposal of solid waste. If the wash water is allowed to evaporate and the concrete hardens, it may be recycled.

Photograph CWA-2. Prefabricated concrete washout. Photo courtesy of CDOT.

Photograph CWA-3. Earthen concrete washout. Photo courtesy of CDOT.

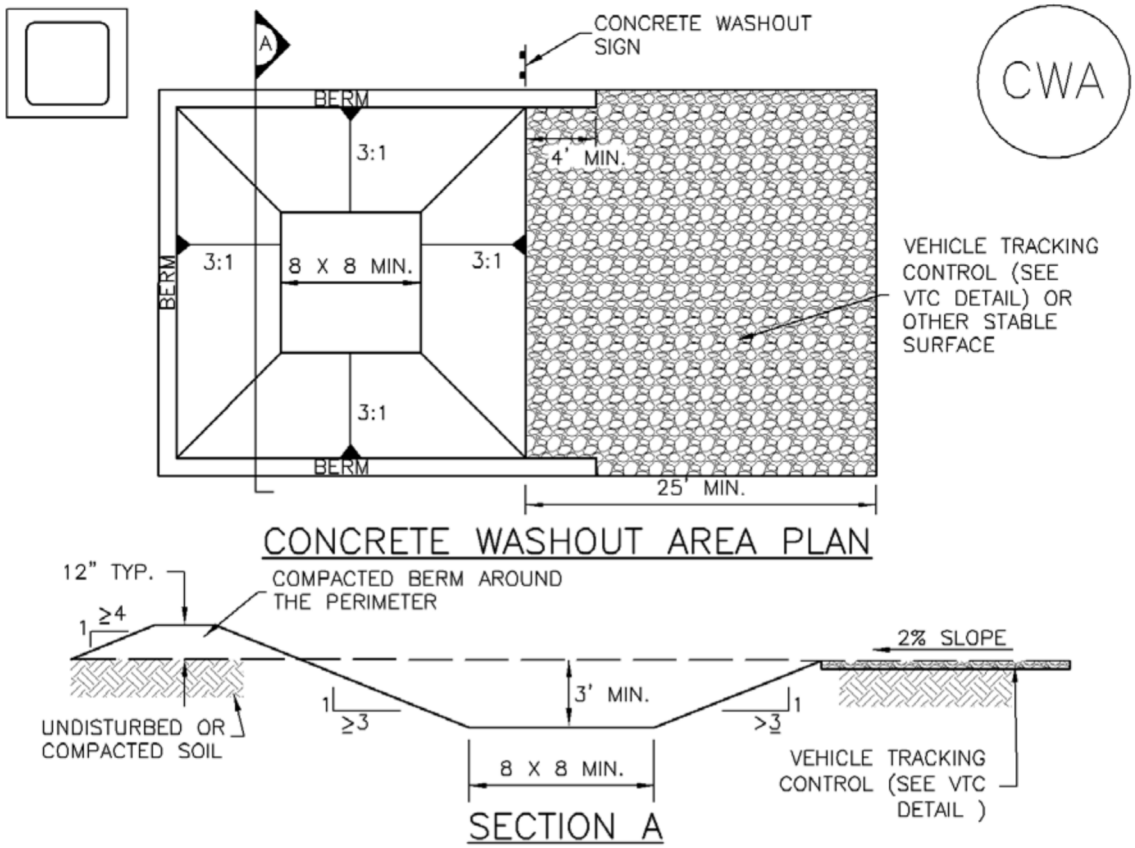

CWA–1. CONCRETE WASHOUT AREA

CWA INSTALLATION NOTES

1. SEE PLAN VIEW FOR:
   –CWA INSTALLATION LOCATION.

2. DO NOT LOCATE AN UNLINED CWA WITHIN 400' OF ANY NATURAL DRAINAGE PATHWAY OR WATERBODY. DO NOT LOCATE WITHIN 1,000' OF ANY WELLS OR DRINKING WATER SOURCES. IF SITE CONSTRAINTS MAKE THIS INFEASIBLE, OR IF HIGHLY PERMEABLE SOILS EXIST ON SITE, THE CWA MUST BE INSTALLED WITH AN IMPERMEABLE LINER (16 MIL MIN. THICKNESS) OR SURFACE STORAGE ALTERNATIVES USING PREFABRICATED CONCRETE WASHOUT DEVICES OR A LINED ABOVE GROUND STORAGE ARE SHOULD BE USED.

3. THE CWA SHALL BE INSTALLED PRIOR TO CONCRETE PLACEMENT ON SITE.

4. CWA SHALL INCLUDE A FLAT SUBSURFACE PIT THAT IS AT LEAST 8' BY 8' SLOPES LEADING OUT OF THE SUBSURFACE PIT SHALL BE 3:1 OR FLATTER. THE PIT SHALL BE AT LEAST 3' DEEP.

5. BERM SURROUNDING SIDES AND BACK OF THE CWA SHALL HAVE MINIMUM HEIGHT OF 1'.

6. VEHICLE TRACKING PAD SHALL BE SLOPED 2% TOWARDS THE CWA.

7. SIGNS SHALL BE PLACED AT THE CONSTRUCTION ENTRANCE, AT THE CWA, AND ELSEWHERE AS NECESSARY TO CLEARLY INDICATE THE LOCATION OF THE CWA TO OPERATORS OF CONCRETE TRUCKS AND PUMP RIGS.

8. USE EXCAVATED MATERIAL FOR PERIMETER BERM CONSTRUCTION.

CWA MAINTENANCE NOTES

1. INSPECT BMPs EACH WORKDAY, AND MAINTAIN THEM IN EFFECTIVE OPERATING CONDITION. MAINTENANCE OF BMPs SHOULD BE PROACTIVE, NOT REACTIVE. INSPECT BMPs AS SOON AS POSSIBLE (AND ALWAYS WITHIN 24 HOURS) FOLLOWING A STORM THAT CAUSES SURFACE EROSION, AND PERFORM NECESSARY MAINTENANCE.

2. FREQUENT OBSERVATIONS AND MAINTENANCE ARE NECESSARY TO MAINTAIN BMPs IN EFFECTIVE OPERATING CONDITION. INSPECTIONS AND CORRECTIVE MEASURES SHOULD BE DOCUMENTED THOROUGHLY.

3. WHERE BMPs HAVE FAILED, REPAIR OR REPLACEMENT SHOULD BE INITIATED UPON DISCOVERY OF THE FAILURE.

4. THE CWA SHALL BE REPAIRED, CLEANED, OR ENLARGED AS NECESSARY TO MAINTAIN CAPACITY FOR CONCRETE WASTE. CONCRETE MATERIALS, ACCUMULATED IN PIT, SHALL BE REMOVED ONCE THE MATERIALS HAVE REACHED A DEPTH OF 2'.

5. CONCRETE WASHOUT WATER, WASTED PIECES OF CONCRETE AND ALL OTHER DEBRIS IN THE SUBSURFACE PIT SHALL BE TRANSPORTED FROM THE JOB SITE IN A WATER–TIGHT CONTAINER AND DISPOSED OF PROPERLY.

6. THE CWA SHALL REMAIN IN PLACE UNTIL ALL CONCRETE FOR THE PROJECT IS PLACED.

7. WHEN THE CWA IS REMOVED, COVER THE DISTURBED AREA WITH TOP SOIL, SEED AND MULCH OR OTHERWISE STABILIZED IN A MANNER APPROVED BY THE LOCAL JURISDICTION.

(DETAIL ADAPTED FROM DOUGLAS COUNTY, COLORADO AND THE CITY OF PARKER, COLORADO, NOT AVAILABLE IN AUTOCAD).

NOTE: MANY JURISDICTIONS HAVE BMP DETAILS THAT VARY FROM UDFCD STANDARD DETAILS. CONSULT WITH LOCAL JURISDICTIONS AS TO WHICH DETAIL SHOULD BE USED WHEN DIFFERENCES ARE NOTED.

Stockpile Management (SP) MM-2

Description

Stockpile management includes measures to minimize erosion and sediment transport from soil stockpiles.

Appropriate Uses

Stockpile management should be used when soils or other erodible materials are stored at the construction site. Special attention should be given to stockpiles in close proximity to natural or manmade storm systems.

Photograph SP-1. A topsoil stockpile that has been partially revegetated and is protected by silt fence perimeter control.

Design and Installation

Locate stockpiles away from all drainage system components including storm sewer inlets. Where practical, choose stockpile locations that that will remain undisturbed for the longest period of time as the phases of construction progress. Place sediment control BMPs around the perimeter of the stockpile, such as sediment control logs, rock socks, silt fence, straw bales and sand bags. See Detail SP-1 for guidance on proper establishment of perimeter controls around a stockpile. For stockpiles in active use, provide a stabilized designated access point on the upgradient side of the stockpile.

Stabilize the stockpile surface with surface roughening, temporary seeding and mulching, erosion control blankets, or soil binders. Soils stockpiled for an extended period (typically for more than 60 days) should be seeded and mulched with a temporary grass cover once the stockpile is placed (typically within 14 days). Use of mulch only or a soil binder is acceptable if the stockpile will be in place for a more limited time period (typically 30-60 days). Timeframes for stabilization of stockpiles noted in this fact sheet are "typical" guidelines. Check permit requirements for specific federal, state, and/or local requirements that may be more prescriptive.

Stockpiles should not be placed in streets or paved areas unless no other practical alternative exists. See the Stabilized Staging Area Fact Sheet for guidance when staging in roadways is unavoidable due to space or right-of-way constraints. For paved areas, rock socks must be used for perimeter control and all inlets with the potential to receive sediment from the stockpile (even from vehicle tracking) must be protected.

Maintenance and Removal

Inspect perimeter controls and inlet protection in accordance with their respective BMP Fact Sheets. Where seeding, mulch and/or soil binders are used, reseeding or reapplication of soil binder may be necessary.

When temporary removal of a perimeter BMP is necessary to access a stockpile, ensure BMPs are reinstalled in accordance with their respective design detail section.

Stockpile Management	
Functions	
Erosion Control	Yes
Sediment Control	Yes
Site/Material Management	Yes

When the stockpile is no longer needed, properly dispose of excess materials and revegetate or otherwise stabilize the ground surface where the stockpile was located.

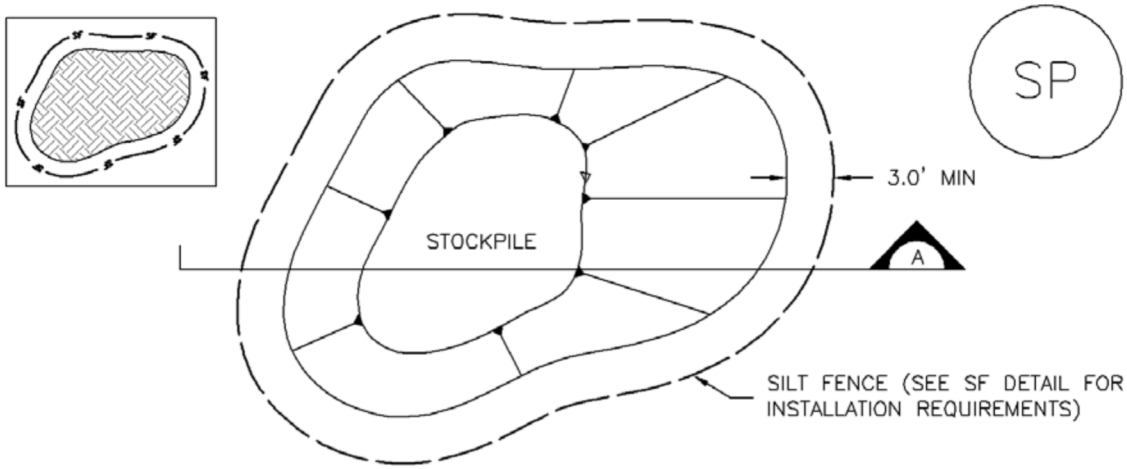

STOCKPILE PROTECTION PLAN

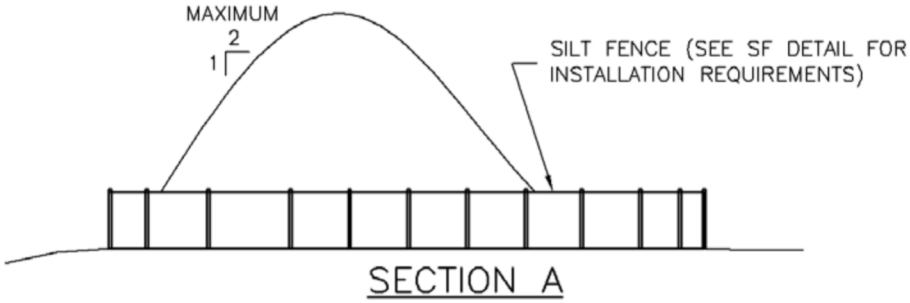

SECTION A

SP–1. STOCKPILE PROTECTION

STOCKPILE PROTECTION INSTALLATION NOTES

1. SEE PLAN VIEW FOR:
   –LOCATION OF STOCKPILES.
   –TYPE OF STOCKPILE PROTECTION.

2. INSTALL PERIMETER CONTROLS IN ACCORDANCE WITH THEIR RESPECTIVE DESIGN DETAILS. SILT FENCE IS SHOWN IN THE STOCKPILE PROTECTION DETAILS; HOWEVER, OTHER TYPES OF PERIMETER CONTROLS INCLUDING SEDIMENT CONTROL LOGS OR ROCK SOCKS MAY BE SUITABLE IN SOME CIRCUMSTANCES. CONSIDERATIONS FOR DETERMINING THE APPROPRIATE TYPE OF PERIMETER CONTROL FOR A STOCKPILE INCLUDE WHETHER THE STOCKPILE IS LOCATED ON A PERVIOUS OR IMPERVIOUS SURFACE, THE RELATIVE HEIGHTS OF THE PERIMETER CONTROL AND STOCKPILE, THE ABILITY OF THE PERIMETER CONTROL TO CONTAIN THE STOCKPILE WITHOUT FAILING IN THE EVENT THAT MATERIAL FROM THE STOCKPILE SHIFTS OR SLUMPS AGAINST THE PERIMETER, AND OTHER FACTORS.

3. STABILIZE THE STOCKPILE SURFACE WITH SURFACE ROUGHENING, TEMPORARY SEEDING AND MULCHING, EROSION CONTROL BLANKETS, OR SOIL BINDERS. SOILS STOCKPILED FOR AN EXTENDED PERIOD (TYPICALLY FOR MORE THAN 60 DAYS) SHOULD BE SEEDED AND MULCHED WITH A TEMPORARY GRASS COVER ONCE THE STOCKPILE IS PLACED (TYPICALLY WITHIN 14 DAYS). USE OF MULCH ONLY OR A SOIL BINDER IS ACCEPTABLE IF THE STOCKPILE WILL BE IN PLACE FOR A MORE LIMITED TIME PERIOD (TYPICALLY 30–60 DAYS).

4. FOR TEMPORARY STOCKPILES ON THE INTERIOR PORTION OF A CONSTRUCTION SITE, WHERE OTHER DOWNGRADIENT CONTROLS, INCLUDING PERIMETER CONTROL, ARE IN PLACE, STOCKPILE PERIMETER CONTROLS MAY NOT BE REQUIRED.

STOCKPILE PROTECTION MAINTENANCE NOTES

1. INSPECT BMPs EACH WORKDAY, AND MAINTAIN THEM IN EFFECTIVE OPERATING CONDITION. MAINTENANCE OF BMPs SHOULD BE PROACTIVE, NOT REACTIVE. INSPECT BMPs AS SOON AS POSSIBLE (AND ALWAYS WITHIN 24 HOURS) FOLLOWING A STORM THAT CAUSES SURFACE EROSION, AND PERFORM NECESSARY MAINTENANCE.

2. FREQUENT OBSERVATIONS AND MAINTENANCE ARE NECESSARY TO MAINTAIN BMPs IN EFFECTIVE OPERATING CONDITION. INSPECTIONS AND CORRECTIVE MEASURES SHOULD BE DOCUMENTED THOROUGHLY.

3. WHERE BMPs HAVE FAILED, REPAIR OR REPLACEMENT SHOULD BE INITIATED UPON DISCOVERY OF THE FAILURE.

STOCKPILE PROTECTION MAINTENANCE NOTES

4. IF PERIMETER PROTECTION MUST BE MOVED TO ACCESS SOIL STOCKPILE, REPLACE PERIMETER CONTROLS BY THE END OF THE WORKDAY.

5. STOCKPILE PERIMETER CONTROLS CAN BE REMOVED ONCE ALL THE MATERIAL FROM THE STOCKPILE HAS BEEN USED.

(DETAILS ADAPTED FROM PARKER, COLORADO, NOT AVAILABLE IN AUTOCAD)

NOTE: MANY JURISDICTIONS HAVE BMP DETAILS THAT VARY FROM UDFCD STANDARD DETAILS. CONSULT WITH LOCAL JURISDICTIONS AS TO WHICH DETAIL SHOULD BE USED WHEN DIFFERENCES ARE NOTED.

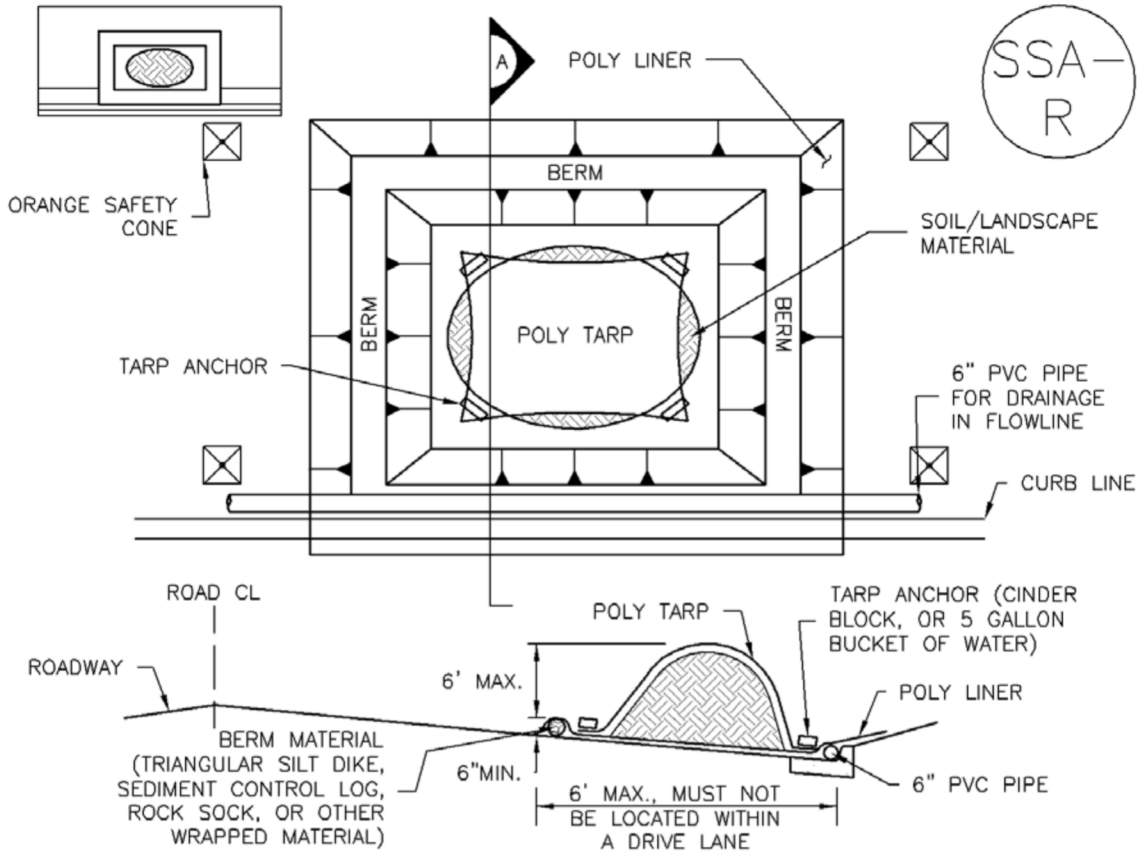

SP-2. MATERIALS STAGING IN ROADWAY

MATERIALS STAGING IN ROADWAYS INSTALLATION NOTES

1. SEE PLAN VIEW FOR
   - LOCATION OF MATERIAL STAGING AREA(S).
   - CONTRACTOR MAY ADJUST LOCATION AND SIZE OF STAGING AREA WITH APPROVAL FROM THE LOCAL JURISDICTION.

2. FEATURE MUST BE INSTALLED PRIOR TO EXCAVATION, EARTHWORK OR DELIVERY OF MATERIALS.

3. MATERIALS MUST BE STATIONED ON THE POLY LINER. ANY INCIDENTAL MATERIALS DEPOSITED ON PAVED SECTION OR ALONG CURB LINE MUST BE CLEANED UP PROMPTLY.

4. POLY LINER AND TARP COVER SHOULD BE OF SIGNIFICANT THICKNESS TO PREVENT DAMAGE OR LOSS OF INTEGRITY.

5. SAND BAGS MAY BE SUBSTITUTED TO ANCHOR THE COVER TARP OR PROVIDE BERMING UNDER THE BASE LINER.

6. FEATURE IS NOT INTENDED FOR USE WITH WET MATERIAL THAT WILL BE DRAINING AND/OR SPREADING OUT ON THE POLY LINER OR FOR DEMOLITION MATERIALS.

7. THIS FEATURE CAN BE USED FOR:
   - UTILITY REPAIRS.
   - WHEN OTHER STAGING LOCATIONS AND OPTIONS ARE LIMITED.
   - OTHER LIMITED APPLICATION AND SHORT DURATION STAGING.

MATERIALS STAGING IN ROADWAY MAINTENANCE NOTES

1. INSPECT BMPs EACH WORKDAY, AND MAINTAIN THEM IN EFFECTIVE OPERATING CONDITION. MAINTENANCE OF BMPs SHOULD BE PROACTIVE, NOT REACTIVE. INSPECT BMPs AS SOON AS POSSIBLE (AND ALWAYS WITHIN 24 HOURS) FOLLOWING A STORM THAT CAUSES SURFACE EROSION, AND PERFORM NECESSARY MAINTENANCE.

2. FREQUENT OBSERVATIONS AND MAINTENANCE ARE NECESSARY TO MAINTAIN BMPs IN EFFECTIVE OPERATING CONDITION. INSPECTIONS AND CORRECTIVE MEASURES SHOULD BE DOCUMENTED THOROUGHLY.

3. WHERE BMPs HAVE FAILED, REPAIR OR REPLACEMENT SHOULD BE INITIATED UPON DISCOVERY OF THE FAILURE.

4. INSPECT PVC PIPE ALONG CURB LINE FOR CLOGGING AND DEBRIS. REMOVE OBSTRUCTIONS PROMPTLY.

5. CLEAN MATERIAL FROM PAVED SURFACES BY SWEEPING OR VACUUMING.

NOTE: MANY JURISDICTIONS HAVE BMP DETAILS THAT VARY FROM UDFCD STANDARD DETAILS. CONSULT WITH LOCAL JURISDICTIONS AS TO WHICH DETAIL SHOULD BE USED WHEN DIFFERENCES ARE NOTED.

(DETAILS ADAPTED FROM AURORA, COLORADO)

Construction Phasing/Sequencing (CP) SM-1

Description

Effective construction site management to minimize erosion and sediment transport includes attention to construction phasing, scheduling, and sequencing of land disturbing activities. On most construction projects, erosion and sediment controls will need to be adjusted as the project progresses and should be documented in the SWMP.

Photograph CP-1. Construction phasing to avoid disturbing the entire area at one time. Photo courtesy of WWE.

Construction phasing refers to disturbing only part of a site at a time to limit the potential for erosion from dormant parts of a site. Grading activities and construction are completed and soils are effectively stabilized on one part of a site before grading and construction begins on another portion of the site.

Construction sequencing or scheduling refers to a specified work schedule that coordinates the timing of land disturbing activities and the installation of erosion and sediment control practices.

Appropriate Uses

All construction projects can benefit from upfront planning to phase and sequence construction activities to minimize the extent and duration of disturbance. Larger projects and linear construction projects may benefit most from construction sequencing or phasing, but even small projects can benefit from construction sequencing that minimizes the duration of disturbance.

Typically, erosion and sediment controls needed at a site will change as a site progresses through the major phases of construction. Erosion and sediment control practices corresponding to each phase of construction must be documented in the SWMP.

Design and Installation

BMPs appropriate to the major phases of development should be identified on construction drawings. In some cases, it will be necessary to provide several drawings showing construction-phase BMPs placed according to stages of development (e.g., clearing and grading, utility installation, active construction, final stabilization). Some municipalities in the Denver area set maximum sizes for disturbed area associated with phases of a construction project. Additionally, requirements for phased construction drawings vary among local governments within the UDFCD boundary. Some local governments require separate erosion and sediment control drawings for initial BMPs, interim conditions (in active construction), and final stabilization.

Construction Scheduling	
Functions	
Erosion Control	Moderate
Sediment Control	Moderate
Site/Material Management	Yes

Typical construction phasing BMPs include:

- Limit the amount of disturbed area at any given time on a site to the extent practical. For example, a 100-acre subdivision might be constructed in five phases of 20 acres each.
- If there is carryover of stockpiled material from one phase to the next, position carryover material in a location easily accessible for the pending phase that will not require disturbance of stabilized areas to access the stockpile. Particularly with regard to efforts to balance cut and fill at a site, careful planning for location of stockpiles is important.

Typical construction sequencing BMPs include:

- Sequence construction activities to minimize duration of soil disturbance and exposure. For example, when multiple utilities will occupy the same trench, schedule installation so that the trench does not have to be closed and opened multiple times.
- Schedule site stabilization activities (e.g., landscaping, seeding and mulching, installation of erosion control blankets) as soon as feasible following grading.
- Install initial erosion and sediment control practices before construction begins. Promptly install additional BMPs for inlet protection, stabilization, etc., as construction activities are completed.

Table CP-1 provides typical sequencing of construction activities and associated BMPs.

Maintenance and Removal

When the construction schedule is altered, erosion and sediment control measures in the SWMP and construction drawings should be appropriately adjusted to reflect actual "on the ground" conditions at the construction site. Be aware that changes in construction schedules can have significant implications for site stabilization, particularly with regard to establishment of vegetative cover.

Table CP-1. Typical Phased BMP Installation for Construction Projects

Project Phase	BMPs
Pre-disturbance, Site Access	▪ Install sediment controls downgradient of access point (on paved streets this may consist of inlet protection). ▪ Establish vehicle tracking control at entrances to paved streets. Fence as needed. ▪ Use construction fencing to define the boundaries of the project and limit access to areas of the site that are not to be disturbed. **Note: it may be necessary to protect inlets in the general vicinity of the site, even if not downgradient, if there is a possibility that sediment tracked from the site could contribute to the inlets.**
Site Clearing and Grubbing	▪ Install perimeter controls as needed on downgradient perimeter of site (silt fence, wattles, etc). ▪ Limit disturbance to those areas planned for disturbance and protect undisturbed areas within the site (construction fence, flagging, etc). ▪ Preserve vegetative buffer at site perimeter. ▪ Create stabilized staging area. ▪ Locate portable toilets on flat surfaces away from drainage paths. Stake in areas susceptible to high winds. ▪ Construct concrete washout area and provide signage. ▪ Establish waste disposal areas. ▪ Install sediment basins. ▪ Create dirt perimeter berms and/or brush barriers during grubbing and clearing. ▪ Separate and stockpile topsoil, leave roughened and/or cover. ▪ Protect stockpiles with perimeter control BMPs. Stockpiles should be located away from drainage paths and should be accessed from the upgradient side so that perimeter controls can remain in place on the downgradient side. Use erosion control blankets, temporary seeding, and/or mulch for stockpiles that will be inactive for an extended period. ▪ Leave disturbed area of site in a roughened condition to limit erosion. Consider temporary revegetation for areas of the site that have been disturbed but that will be inactive for an extended period. ▪ Water to minimize dust but not to the point that watering creates runoff.

Project Phase	BMPs
Utility And Infrastructure Installation	**In Addition to the Above BMPs:** ▪ Close trench as soon as possible (generally at the end of the day). ▪ Use rough-cut street control or apply road base for streets that will not be promptly paved. ▪ Provide inlet protection as streets are paved and inlets are constructed. ▪ Protect and repair BMPs, as necessary. ▪ Perform street sweeping as needed.
Building Construction	**In Addition to the Above BMPs:** ▪ Implement materials management and good housekeeping practices for home building activities. ▪ Use perimeter controls for temporary stockpiles from foundation excavations. ▪ For lots adjacent to streets, lot-line perimeter controls may be necessary at the back of curb.
Final Grading	**In Addition to the Above BMPs:** ▪ Remove excess or waste materials. ▪ Remove stored materials.
Final Stabilization	**In Addition to the Above BMPs:** ▪ Seed and mulch/tackify. ▪ Seed and install blankets on steep slopes. ▪ Remove all temporary BMPs when site has reached final stabilization.

Protection of Existing Vegetation (PV) SM-2

Description

Protection of existing vegetation on a construction site can be accomplished through installation of a construction fence around the area requiring protection. In cases where upgradient areas are disturbed, it may also be necessary to install perimeter controls to minimize sediment loading to sensitive areas such as wetlands. Existing vegetation may be designated for protection to maintain a stable surface cover as part of construction phasing, or vegetation may be protected in areas designated to remain in natural condition under post-development conditions (e.g., wetlands, mature trees, riparian areas, open space).

Photograph PV-1. Protection of existing vegetation and a sensitive area. Photo courtesy of CDOT.

Appropriate Uses

Existing vegetation should be preserved for the maximum practical duration on a construction site through the use of effective construction phasing. Preserving vegetation helps to minimize erosion and can reduce revegetation costs following construction.

Protection of wetland areas is required under the Clean Water Act, unless a permit has been obtained from the U.S. Army Corps of Engineers (USACE) allowing impacts in limited areas.

If trees are to be protected as part of post-development landscaping, care must be taken to avoid several types of damage, some of which may not be apparent at the time of injury. Potential sources of injury include soil compaction during grading or due to construction traffic, direct equipment-related injury such as bark removal, branch breakage, surface grading and trenching, and soil cut and fill. In order to minimize injuries that may lead to immediate or later death of the tree, tree protection zones should be developed during site design, implemented at the beginning of a construction project, as well as continued during active construction.

Design and Installation

General

Once an area has been designated as a preservation area, there should be no construction activity allowed within a set distance of the area. Clearly mark the area with construction fencing. Do not allow stockpiles, equipment, trailers or parking within the protected area. Guidelines to protect various types of existing vegetation follow.

Protection of Existing Vegetation	
Functions	
Erosion Control	Yes
Sediment Control	Moderate
Site/Material Management	Yes

Surface Cover During Phased Construction

Install construction fencing or other perimeter controls around areas to be protected from clearing and grading as part of construction phasing.

Maintaining surface cover on steep slopes for the maximum practical duration during construction is recommended.

Open Space Preservation

Where natural open space areas will be preserved as part of a development, it is important to install construction fencing around these areas to protect them from compaction. This is particularly important when areas with soils with high infiltration rates are preserved as part of LID designs. Preserved open space areas should not be used for staging and equipment storage.

Wetlands and Riparian Areas

Install a construction fence around the perimeter of the wetland or riparian (streamside vegetation) area to prevent access by equipment. In areas downgradient of disturbed areas, install a perimeter control such as silt fence, sediment control logs, or similar measure to minimize sediment loading to the wetland.

Tree Protection[1]

- Before beginning construction operations, establish a tree protection zone around trees to be preserved by installing construction fences. Allow enough space from the trunk to protect the root zone from soil compaction and mechanical damage, and the branches from mechanical damage (see Table PV-1). If low branches will be kept, place the fence outside of the drip line. Where this is not possible, place fencing as far away from the trunk as possible. In order to maintain a healthy tree, be aware that about 60 percent of the tree's root zone extends beyond the drip line.

Table PV-1
Guidelines for Determining the Tree Protection Zone
(Source: Matheny and Clark, 1998; as cited in GreenCO and WWE 2008)

	Distance from Trunk (ft) per inch of DBH		
Species Tolerance to Damage	*Young*	*Mature*	*Over mature*
Good	0.5'	0.75'	1.0'
Moderate	0.75'	1.0'	1.25'
Poor	1.0'	1.25'	1.5'
Notes: DBH = diameter at breast height (4.5 ft above grade); Young = <20% of life expectancy; Mature = 20%-80% of life expectancy; Over mature =>80% of life expectancy			

- Most tree roots grow within the top 12 to 18 inches of soil. Grade changes within the tree protection zone should be avoided where possible because seemingly minor grade changes can either smother

[1] Tree Protection guidelines adapted from GreenCO and WWE (2008). *Green Industry Best Management Practices (BMPs) for the Conservation and Protection of Water Resources in Colorado: Moving Toward Sustainability, Third Release*. See www.greenco.org for more detailed guidance on tree preservation.

roots (in fill situations) or damage roots (in cut situations). Consider small walls where needed to avoid grade changes in the tree protection zone.

- Place and maintain a layer of mulch 4 to 6-inch thick from the tree trunk to the fencing, keeping a 6-inch space between the mulch and the trunk. Mulch helps to preserve moisture and decrease soil compaction if construction traffic is unavoidable. When planting operations are completed, the mulch may be reused throughout planting areas.
- Limit access, if needed at all, and appoint one route as the main entrance and exit to the tree protection zone. Within the tree protection zone, do not allow any equipment to be stored, chemicals to be dumped, or construction activities to take place except fine grading, irrigation system installation, and planting operations. These activities should be conducted in consultation with a landscaping professional, following Green Industry BMPs.
- Be aware that soil compaction can cause extreme damage to tree health that may appear gradually over a period of years. Soil compaction is easier to prevent than repair.

Maintenance and Removal

Repair or replace damaged or displaced fencing or other protective barriers around the vegetated area.

If damage occurs to a tree, consult an arborist for guidance on how to care for the tree. If a tree in a designated preservation area is damaged beyond repair, remove and replace with a 2-inch diameter tree of the same or similar species.

Construction equipment must not enter a wetland area, except as permitted by the U.S. Army Corps of Engineers (USACE). Inadvertent placement of fill in a wetland is a 404 permit violation and will require notification of the USACE.

If damage to vegetation occurs in a protected area, reseed the area with the same or similar species, following the recommendations in the USDCM *Revegetation* chapter.

APPENDIX E - NRCS SOILS REPORT

United States Department of Agriculture

NRCS

Natural Resources Conservation Service

A product of the National Cooperative Soil Survey, a joint effort of the United States Department of Agriculture and other Federal agencies, State agencies including the Agricultural Experiment Stations, and local participants

Custom Soil Resource Report for

El Paso County Area, Colorado

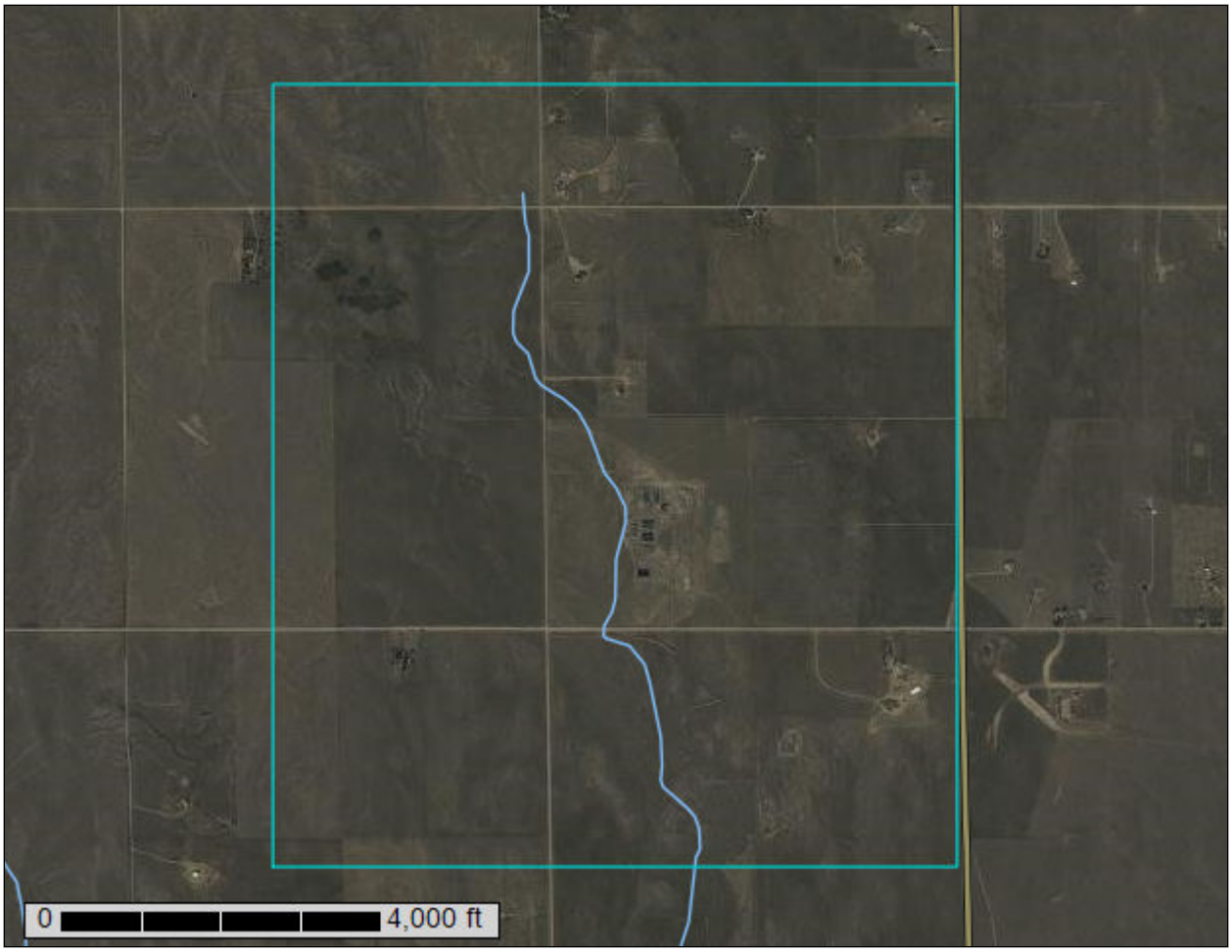

August 10, 2020

Preface

Soil surveys contain information that affects land use planning in survey areas. They highlight soil limitations that affect various land uses and provide information about the properties of the soils in the survey areas. Soil surveys are designed for many different users, including farmers, ranchers, foresters, agronomists, urban planners, community officials, engineers, developers, builders, and home buyers. Also, conservationists, teachers, students, and specialists in recreation, waste disposal, and pollution control can use the surveys to help them understand, protect, or enhance the environment.

Various land use regulations of Federal, State, and local governments may impose special restrictions on land use or land treatment. Soil surveys identify soil properties that are used in making various land use or land treatment decisions. The information is intended to help the land users identify and reduce the effects of soil limitations on various land uses. The landowner or user is responsible for identifying and complying with existing laws and regulations.

Although soil survey information can be used for general farm, local, and wider area planning, onsite investigation is needed to supplement this information in some cases. Examples include soil quality assessments (http://www.nrcs.usda.gov/wps/portal/nrcs/main/soils/health/) and certain conservation and engineering applications. For more detailed information, contact your local USDA Service Center (https://offices.sc.egov.usda.gov/locator/app?agency=nrcs) or your NRCS State Soil Scientist (http://www.nrcs.usda.gov/wps/portal/nrcs/detail/soils/contactus/?cid=nrcs142p2_053951).

Great differences in soil properties can occur within short distances. Some soils are seasonally wet or subject to flooding. Some are too unstable to be used as a foundation for buildings or roads. Clayey or wet soils are poorly suited to use as septic tank absorption fields. A high water table makes a soil poorly suited to basements or underground installations.

The National Cooperative Soil Survey is a joint effort of the United States Department of Agriculture and other Federal agencies, State agencies including the Agricultural Experiment Stations, and local agencies. The Natural Resources Conservation Service (NRCS) has leadership for the Federal part of the National Cooperative Soil Survey.

Information about soils is updated periodically. Updated information is available through the NRCS Web Soil Survey, the site for official soil survey information.

The U.S. Department of Agriculture (USDA) prohibits discrimination in all its programs and activities on the basis of race, color, national origin, age, disability, and where applicable, sex, marital status, familial status, parental status, religion, sexual orientation, genetic information, political beliefs, reprisal, or because all or a part of an individual's income is derived from any public assistance program. (Not all prohibited bases apply to all programs.) Persons with disabilities who require

Contents

How Soil Surveys Are Made

Soil surveys are made to provide information about the soils and miscellaneous areas in a specific area. They include a description of the soils and miscellaneous areas and their location on the landscape and tables that show soil properties and limitations affecting various uses. Soil scientists observed the steepness, length, and shape of the slopes; the general pattern of drainage; the kinds of crops and native plants; and the kinds of bedrock. They observed and described many soil profiles. A soil profile is the sequence of natural layers, or horizons, in a soil. The profile extends from the surface down into the unconsolidated material in which the soil formed or from the surface down to bedrock. The unconsolidated material is devoid of roots and other living organisms and has not been changed by other biological activity.

Currently, soils are mapped according to the boundaries of major land resource areas (MLRAs). MLRAs are geographically associated land resource units that share common characteristics related to physiography, geology, climate, water resources, soils, biological resources, and land uses (USDA, 2006). Soil survey areas typically consist of parts of one or more MLRA.

The soils and miscellaneous areas in a survey area occur in an orderly pattern that is related to the geology, landforms, relief, climate, and natural vegetation of the area. Each kind of soil and miscellaneous area is associated with a particular kind of landform or with a segment of the landform. By observing the soils and miscellaneous areas in the survey area and relating their position to specific segments of the landform, a soil scientist develops a concept, or model, of how they were formed. Thus, during mapping, this model enables the soil scientist to predict with a considerable degree of accuracy the kind of soil or miscellaneous area at a specific location on the landscape.

Commonly, individual soils on the landscape merge into one another as their characteristics gradually change. To construct an accurate soil map, however, soil scientists must determine the boundaries between the soils. They can observe only a limited number of soil profiles. Nevertheless, these observations, supplemented by an understanding of the soil-vegetation-landscape relationship, are sufficient to verify predictions of the kinds of soil in an area and to determine the boundaries.

Soil scientists recorded the characteristics of the soil profiles that they studied. They noted soil color, texture, size and shape of soil aggregates, kind and amount of rock fragments, distribution of plant roots, reaction, and other features that enable them to identify soils. After describing the soils in the survey area and determining their properties, the soil scientists assigned the soils to taxonomic classes (units). Taxonomic classes are concepts. Each taxonomic class has a set of soil characteristics with precisely defined limits. The classes are used as a basis for comparison to classify soils systematically. Soil taxonomy, the system of taxonomic classification used in the United States, is based mainly on the kind and character of soil properties and the arrangement of horizons within the profile. After the soil

scientists classified and named the soils in the survey area, they compared the individual soils with similar soils in the same taxonomic class in other areas so that they could confirm data and assemble additional data based on experience and research.

The objective of soil mapping is not to delineate pure map unit components; the objective is to separate the landscape into landforms or landform segments that have similar use and management requirements. Each map unit is defined by a unique combination of soil components and/or miscellaneous areas in predictable proportions. Some components may be highly contrasting to the other components of the map unit. The presence of minor components in a map unit in no way diminishes the usefulness or accuracy of the data. The delineation of such landforms and landform segments on the map provides sufficient information for the development of resource plans. If intensive use of small areas is planned, onsite investigation is needed to define and locate the soils and miscellaneous areas.

Soil scientists make many field observations in the process of producing a soil map. The frequency of observation is dependent upon several factors, including scale of mapping, intensity of mapping, design of map units, complexity of the landscape, and experience of the soil scientist. Observations are made to test and refine the soil-landscape model and predictions and to verify the classification of the soils at specific locations. Once the soil-landscape model is refined, a significantly smaller number of measurements of individual soil properties are made and recorded. These measurements may include field measurements, such as those for color, depth to bedrock, and texture, and laboratory measurements, such as those for content of sand, silt, clay, salt, and other components. Properties of each soil typically vary from one point to another across the landscape.

Observations for map unit components are aggregated to develop ranges of characteristics for the components. The aggregated values are presented. Direct measurements do not exist for every property presented for every map unit component. Values for some properties are estimated from combinations of other properties.

While a soil survey is in progress, samples of some of the soils in the area generally are collected for laboratory analyses and for engineering tests. Soil scientists interpret the data from these analyses and tests as well as the field-observed characteristics and the soil properties to determine the expected behavior of the soils under different uses. Interpretations for all of the soils are field tested through observation of the soils in different uses and under different levels of management. Some interpretations are modified to fit local conditions, and some new interpretations are developed to meet local needs. Data are assembled from other sources, such as research information, production records, and field experience of specialists. For example, data on crop yields under defined levels of management are assembled from farm records and from field or plot experiments on the same kinds of soil.

Predictions about soil behavior are based not only on soil properties but also on such variables as climate and biological activity. Soil conditions are predictable over long periods of time, but they are not predictable from year to year. For example, soil scientists can predict with a fairly high degree of accuracy that a given soil will have a high water table within certain depths in most years, but they cannot predict that a high water table will always be at a specific level in the soil on a specific date.

After soil scientists located and identified the significant natural bodies of soil in the survey area, they drew the boundaries of these bodies on aerial photographs and

identified each as a specific map unit. Aerial photographs show trees, buildings, fields, roads, and rivers, all of which help in locating boundaries accurately.

Soil Map

The soil map section includes the soil map for the defined area of interest, a list of soil map units on the map and extent of each map unit, and cartographic symbols displayed on the map. Also presented are various metadata about data used to produce the map, and a description of each soil map unit.

Custom Soil Resource Report
Soil Map

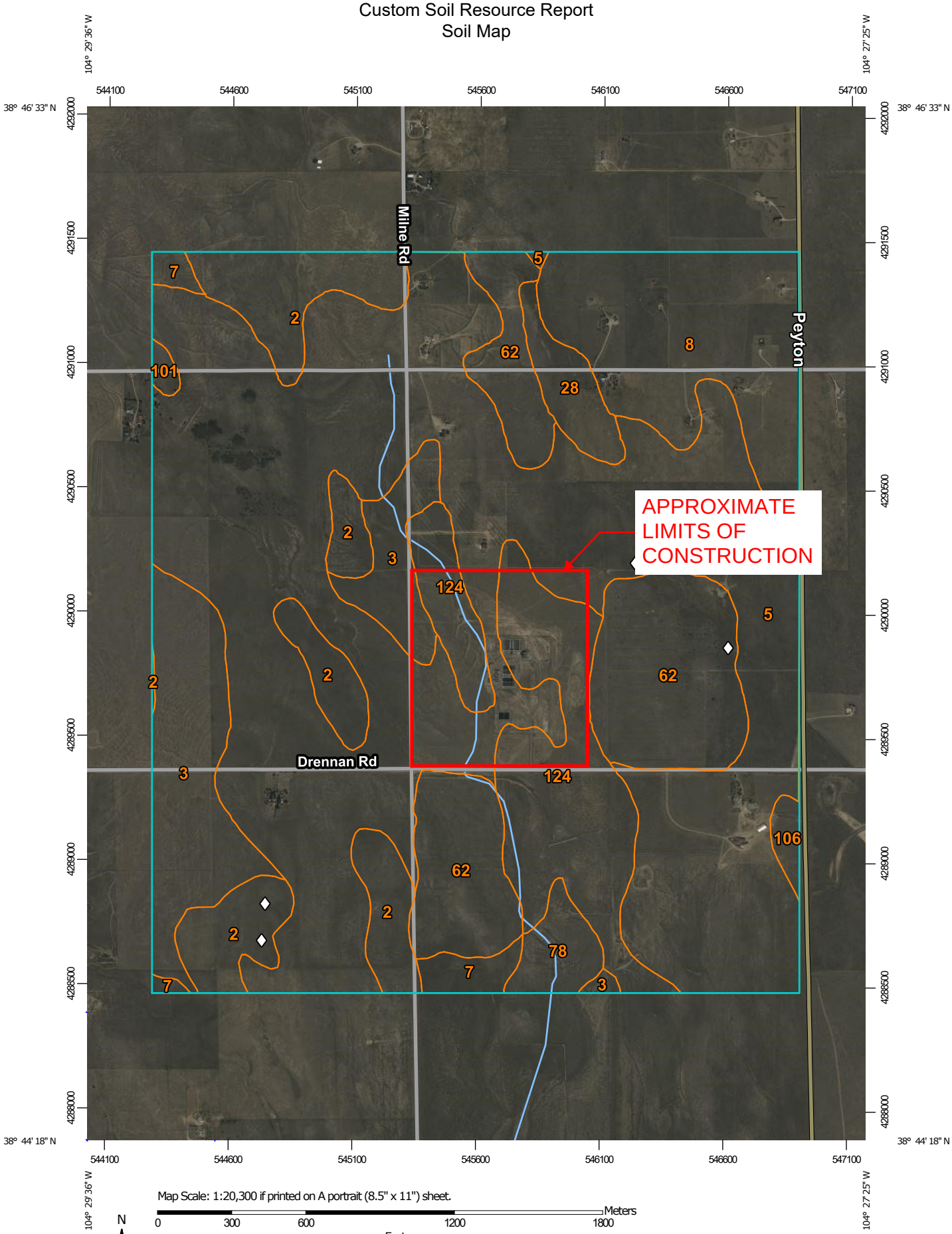

Map Scale: 1:20,300 if printed on A portrait (8.5" x 11") sheet.

N

Meters: 0 300 600 1200 1800

Feet: 0 500 1000 2000 3000

Map projection: Web Mercator Corner coordinates: WGS84 Edge tics: UTM Zone 13N WGS84

MAP LEGEND

Area of Interest (AOI)

- Area of Interest (AOI)

Soils

- Soil Map Unit Polygons
- Soil Map Unit Lines
- Soil Map Unit Points

Special Point Features

- Blowout
- Borrow Pit
- Clay Spot
- Closed Depression
- Gravel Pit
- Gravelly Spot
- Landfill
- Lava Flow
- Marsh or swamp
- Mine or Quarry
- Miscellaneous Water
- Perennial Water
- Rock Outcrop
- Saline Spot
- Sandy Spot
- Severely Eroded Spot
- Sinkhole
- Slide or Slip
- Sodic Spot
- Spoil Area
- Stony Spot
- Very Stony Spot
- Wet Spot
- Other
- Special Line Features

Water Features

- Streams and Canals

Transportation

- Rails
- Interstate Highways
- US Routes
- Major Roads
- Local Roads

Background

- Aerial Photography

MAP INFORMATION

The soil surveys that comprise your AOI were mapped at 1:24,000.

Please rely on the bar scale on each map sheet for map measurements.

Source of Map: Natural Resources Conservation Service
Web Soil Survey URL:
Coordinate System: Web Mercator (EPSG:3857)

Maps from the Web Soil Survey are based on the Web Mercator projection, which preserves direction and shape but distorts distance and area. A projection that preserves area, such as the Albers equal-area conic projection, should be used if more accurate calculations of distance or area are required.

This product is generated from the USDA-NRCS certified data as of the version date(s) listed below.

Soil Survey Area: El Paso County Area, Colorado
Survey Area Data: Version 18, Jun 5, 2020

Soil map units are labeled (as space allows) for map scales 1:50,000 or larger.

Date(s) aerial images were photographed: Sep 11, 2018—Oct 20, 2018

The orthophoto or other base map on which the soil lines were compiled and digitized probably differs from the background imagery displayed on these maps. As a result, some minor shifting of map unit boundaries may be evident.

Custom Soil Resource Report
Map—Hydrologic Soil Group

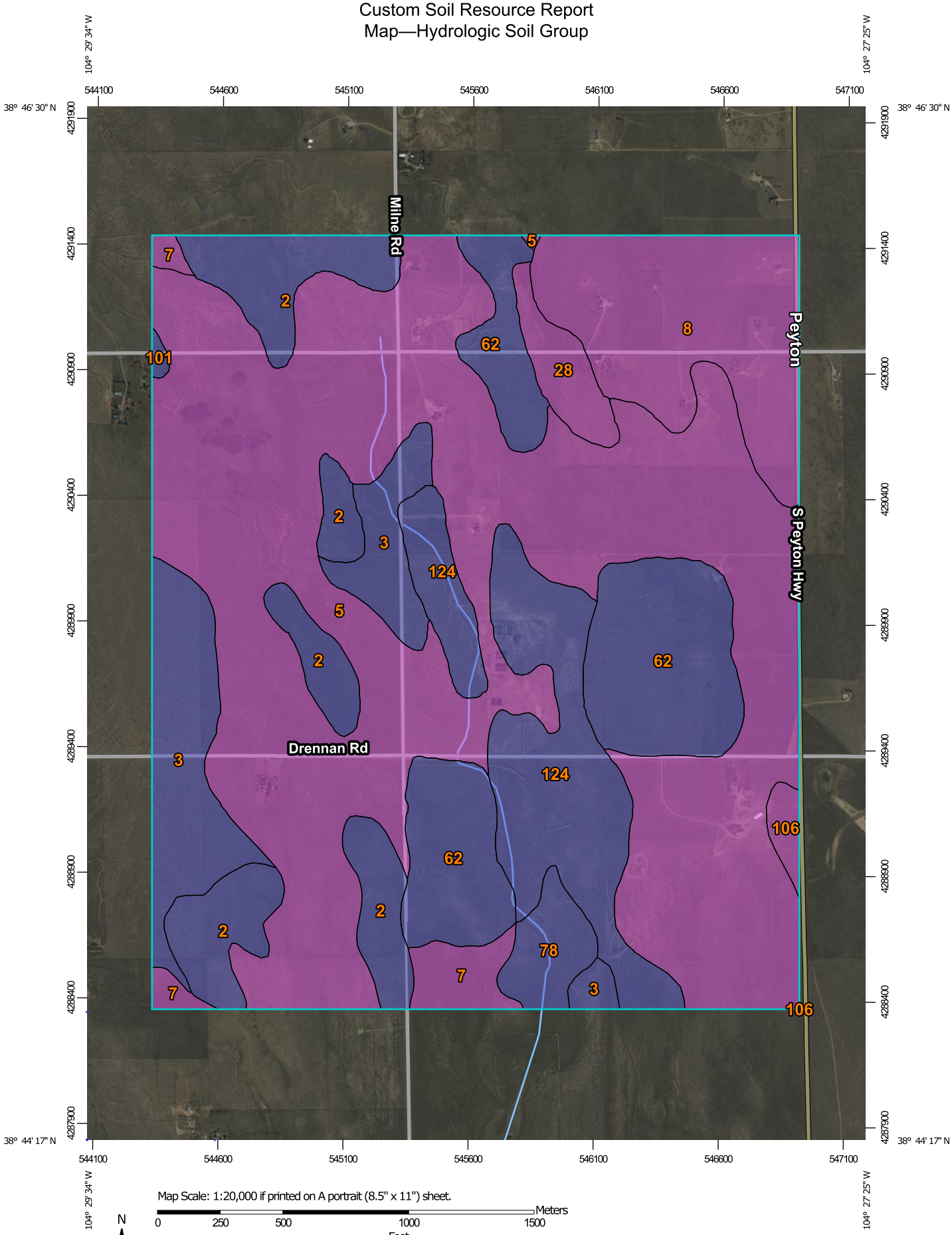

Map Scale: 1:20,000 if printed on A portrait (8.5" x 11") sheet.

N

Meters: 0 250 500 1000 1500

Feet: 0 500 1000 2000 3000

Map projection: Web Mercator Corner coordinates: WGS84 Edge tics: UTM Zone 13N WGS84

MAP LEGEND

Area of Interest (AOI)

Area of Interest (AOI)

Soils

Soil Rating Polygons

- A
- A/D
- B
- B/D
- C
- C/D
- D
- Not rated or not available

Soil Rating Lines

- A
- A/D
- B
- B/D
- C
- C/D
- D
- Not rated or not available

Soil Rating Points

- A
- A/D
- B
- B/D
- C
- C/D
- D
- Not rated or not available

Water Features

Streams and Canals

Transportation

- Rails
- Interstate Highways
- US Routes
- Major Roads
- Local Roads

Background

Aerial Photography

MAP INFORMATION

The soil surveys that comprise your AOI were mapped at 1:24,000.

Please rely on the bar scale on each map sheet for map measurements.

Source of Map: Natural Resources Conservation Service
Web Soil Survey URL:
Coordinate System: Web Mercator (EPSG:3857)

Maps from the Web Soil Survey are based on the Web Mercator projection, which preserves direction and shape but distorts distance and area. A projection that preserves area, such as the Albers equal-area conic projection, should be used if more accurate calculations of distance or area are required.

This product is generated from the USDA-NRCS certified data as of the version date(s) listed below.

Soil Survey Area: El Paso County Area, Colorado
Survey Area Data: Version 18, Jun 5, 2020

Soil map units are labeled (as space allows) for map scales 1:50,000 or larger.

Date(s) aerial images were photographed: Sep 11, 2018—Oct 20, 2018

The orthophoto or other base map on which the soil lines were compiled and digitized probably differs from the background imagery displayed on these maps. As a result, some minor shifting of map unit boundaries may be evident.

Map Unit Legend

Map Unit Symbol	Map Unit Name	Acres in AOI	Percent of AOI
2	Ascalon sandy loam, 1 to 3 percent slopes	160.7	8.3%
3	Ascalon sandy loam, 3 to 9 percent slopes	155.4	8.0%
5	Bijou loamy sand, 1 to 8 percent slopes	955.0	49.3%
7	Bijou sandy loam, 3 to 8 percent slopes	22.8	1.2%
8	Blakeland loamy sand, 1 to 9 percent slopes	174.3	9.0%
28	Ellicott loamy coarse sand, 0 to 5 percent slopes	30.5	1.6%
62	Olnest-Vona complex, cool, 1 to 6 percent slopes, eroded	219.8	11.3%
78	Sampson loam, 0 to 3 percent slopes	26.5	1.4%
101	Ustic Torrifluvents, loamy	4.5	0.2%
106	Wigton loamy sand, 1 to 8 percent slopes	8.4	0.4%
124	Olnest sandy loam, 0 to 3 percent slopes	178.8	9.2%
Totals for Area of Interest		**1,936.7**	**100.0%**

Map Unit Descriptions

The map units delineated on the detailed soil maps in a soil survey represent the soils or miscellaneous areas in the survey area. The map unit descriptions, along with the maps, can be used to determine the composition and properties of a unit.

A map unit delineation on a soil map represents an area dominated by one or more major kinds of soil or miscellaneous areas. A map unit is identified and named according to the taxonomic classification of the dominant soils. Within a taxonomic class there are precisely defined limits for the properties of the soils. On the landscape, however, the soils are natural phenomena, and they have the characteristic variability of all natural phenomena. Thus, the range of some observed properties may extend beyond the limits defined for a taxonomic class. Areas of soils of a single taxonomic class rarely, if ever, can be mapped without including areas of other taxonomic classes. Consequently, every map unit is made up of the soils or miscellaneous areas for which it is named and some minor components that belong to taxonomic classes other than those of the major soils.

Most minor soils have properties similar to those of the dominant soil or soils in the map unit, and thus they do not affect use and management. These are called noncontrasting, or similar, components. They may or may not be mentioned in a

particular map unit description. Other minor components, however, have properties and behavioral characteristics divergent enough to affect use or to require different management. These are called contrasting, or dissimilar, components. They generally are in small areas and could not be mapped separately because of the scale used. Some small areas of strongly contrasting soils or miscellaneous areas are identified by a special symbol on the maps. If included in the database for a given area, the contrasting minor components are identified in the map unit descriptions along with some characteristics of each. A few areas of minor components may not have been observed, and consequently they are not mentioned in the descriptions, especially where the pattern was so complex that it was impractical to make enough observations to identify all the soils and miscellaneous areas on the landscape.

The presence of minor components in a map unit in no way diminishes the usefulness or accuracy of the data. The objective of mapping is not to delineate pure taxonomic classes but rather to separate the landscape into landforms or landform segments that have similar use and management requirements. The delineation of such segments on the map provides sufficient information for the development of resource plans. If intensive use of small areas is planned, however, onsite investigation is needed to define and locate the soils and miscellaneous areas.

An identifying symbol precedes the map unit name in the map unit descriptions. Each description includes general facts about the unit and gives important soil properties and qualities.

Soils that have profiles that are almost alike make up a *soil series*. Except for differences in texture of the surface layer, all the soils of a series have major horizons that are similar in composition, thickness, and arrangement.

Soils of one series can differ in texture of the surface layer, slope, stoniness, salinity, degree of erosion, and other characteristics that affect their use. On the basis of such differences, a soil series is divided into *soil phases*. Most of the areas shown on the detailed soil maps are phases of soil series. The name of a soil phase commonly indicates a feature that affects use or management. For example, Alpha silt loam, 0 to 2 percent slopes, is a phase of the Alpha series.

Some map units are made up of two or more major soils or miscellaneous areas. These map units are complexes, associations, or undifferentiated groups.

A *complex* consists of two or more soils or miscellaneous areas in such an intricate pattern or in such small areas that they cannot be shown separately on the maps. The pattern and proportion of the soils or miscellaneous areas are somewhat similar in all areas. Alpha-Beta complex, 0 to 6 percent slopes, is an example.

An *association* is made up of two or more geographically associated soils or miscellaneous areas that are shown as one unit on the maps. Because of present or anticipated uses of the map units in the survey area, it was not considered practical or necessary to map the soils or miscellaneous areas separately. The pattern and relative proportion of the soils or miscellaneous areas are somewhat similar. Alpha-Beta association, 0 to 2 percent slopes, is an example.

An *undifferentiated group* is made up of two or more soils or miscellaneous areas that could be mapped individually but are mapped as one unit because similar interpretations can be made for use and management. The pattern and proportion of the soils or miscellaneous areas in a mapped area are not uniform. An area can be made up of only one of the major soils or miscellaneous areas, or it can be made up of all of them. Alpha and Beta soils, 0 to 2 percent slopes, is an example.

Some surveys include *miscellaneous areas*. Such areas have little or no soil material and support little or no vegetation. Rock outcrop is an example.

El Paso County Area, Colorado

2—Ascalon sandy loam, 1 to 3 percent slopes

Map Unit Setting

National map unit symbol: 367q
Elevation: 5,500 to 6,500 feet
Mean annual precipitation: 14 to 16 inches
Mean annual air temperature: 47 to 50 degrees F
Frost-free period: 130 to 150 days
Farmland classification: Prime farmland if irrigated

Map Unit Composition

Ascalon and similar soils: 98 percent
Minor components: 2 percent
Estimates are based on observations, descriptions, and transects of the mapunit.

Description of Ascalon

Setting

Landform: Flats
Landform position (three-dimensional): Talf
Down-slope shape: Linear
Across-slope shape: Linear
Parent material: Mixed alluvium and/or eolian deposits

Typical profile

A - 0 to 8 inches: sandy loam
Bt - 8 to 21 inches: sandy clay loam
BC - 21 to 27 inches: sandy loam
Ck1 - 27 to 48 inches: sandy loam
Ck2 - 48 to 60 inches: loamy sand

Properties and qualities

Slope: 1 to 3 percent
Depth to restrictive feature: More than 80 inches
Drainage class: Well drained
Runoff class: Low
Capacity of the most limiting layer to transmit water (Ksat): Moderately high to high (0.60 to 2.00 in/hr)
Depth to water table: More than 80 inches
Frequency of flooding: None
Frequency of ponding: None
Calcium carbonate, maximum content: 10 percent
Maximum salinity: Nonsaline to very slightly saline (0.0 to 2.0 mmhos/cm)
Available water capacity: Moderate (about 7.1 inches)

Interpretive groups

Land capability classification (irrigated): 3e
Land capability classification (nonirrigated): 4e
Hydrologic Soil Group: B
Ecological site: R069XY026CO - Sandy Plains LRU's A & B
Other vegetative classification: SANDY PLAINS (069BY026CO)
Hydric soil rating: No

Minor Components

Pleasant

Percent of map unit: 1 percent
Landform: Depressions
Hydric soil rating: Yes

Other soils

Percent of map unit: 1 percent
Hydric soil rating: No

3—Ascalon sandy loam, 3 to 9 percent slopes

Map Unit Setting

National map unit symbol: 2tlny
Elevation: 3,870 to 5,960 feet
Mean annual precipitation: 13 to 18 inches
Mean annual air temperature: 46 to 54 degrees F
Frost-free period: 95 to 155 days
Farmland classification: Not prime farmland

Map Unit Composition

Ascalon and similar soils: 85 percent
Minor components: 15 percent
Estimates are based on observations, descriptions, and transects of the mapunit.

Description of Ascalon

Setting

Landform: Interfluves
Landform position (two-dimensional): Backslope
Landform position (three-dimensional): Side slope
Down-slope shape: Linear
Across-slope shape: Linear
Parent material: Wind-reworked alluvium and/or calcareous sandy eolian deposits

Typical profile

Ap - 0 to 6 inches: sandy loam
Bt1 - 6 to 12 inches: sandy clay loam
Bt2 - 12 to 19 inches: sandy clay loam
Bk1 - 19 to 35 inches: fine sandy loam
Bk2 - 35 to 80 inches: fine sandy loam

Properties and qualities

Slope: 3 to 9 percent
Depth to restrictive feature: More than 80 inches
Drainage class: Well drained
Runoff class: Medium
Capacity of the most limiting layer to transmit water (Ksat): Moderately high to high (0.60 to 5.98 in/hr)

Depth to water table: More than 80 inches
Frequency of flooding: None
Frequency of ponding: None
Calcium carbonate, maximum content: 10 percent
Maximum salinity: Nonsaline (0.1 to 1.9 mmhos/cm)
Sodium adsorption ratio, maximum: 1.0
Available water capacity: Moderate (about 7.1 inches)

Interpretive groups

Land capability classification (irrigated): 6e
Land capability classification (nonirrigated): 6e
Hydrologic Soil Group: B
Ecological site: R067BY024CO - Sandy Plains
Hydric soil rating: No

Minor Components

Olnest

Percent of map unit: 10 percent
Landform: Interfluves
Landform position (two-dimensional): Backslope
Landform position (three-dimensional): Side slope
Down-slope shape: Linear
Across-slope shape: Linear
Ecological site: R067BY024CO - Sandy Plains
Hydric soil rating: No

Vona

Percent of map unit: 5 percent
Landform: Interfluves
Landform position (two-dimensional): Backslope
Landform position (three-dimensional): Side slope
Down-slope shape: Linear
Across-slope shape: Linear
Ecological site: R067BY024CO - Sandy Plains
Hydric soil rating: No

5—Bijou loamy sand, 1 to 8 percent slopes

Map Unit Setting

National map unit symbol: 2tqxq
Elevation: 4,000 to 5,300 feet
Mean annual precipitation: 14 to 16 inches
Mean annual air temperature: 50 to 54 degrees F
Frost-free period: 130 to 170 days
Farmland classification: Not prime farmland

Map Unit Composition

Bijou and similar soils: 85 percent
Minor components: 15 percent

Estimates are based on observations, descriptions, and transects of the mapunit.

Description of Bijou

Setting

Landform: Sand sheets
Landform position (two-dimensional): Backslope
Landform position (three-dimensional): Side slope
Down-slope shape: Linear
Across-slope shape: Linear
Parent material: Eolian sands

Typical profile

A - 0 to 4 inches: loamy sand
AB - 4 to 9 inches: loamy sand
Bt - 9 to 36 inches: sandy loam
BC - 36 to 50 inches: loamy sand
C - 50 to 79 inches: loamy sand

Properties and qualities

Slope: 1 to 8 percent
Depth to restrictive feature: More than 80 inches
Drainage class: Somewhat excessively drained
Capacity of the most limiting layer to transmit water (Ksat): High (2.00 to 6.00 in/hr)
Depth to water table: More than 80 inches
Frequency of flooding: None
Frequency of ponding: None
Maximum salinity: Nonsaline (0.1 to 0.2 mmhos/cm)
Available water capacity: Low (about 5.6 inches)

Interpretive groups

Land capability classification (irrigated): 4e
Land capability classification (nonirrigated): 4e
Hydrologic Soil Group: A
Ecological site: R067BY024CO - Sandy Plains
Hydric soil rating: No

Minor Components

Valent

Percent of map unit: 10 percent
Landform: Sand sheets
Landform position (two-dimensional): Backslope
Landform position (three-dimensional): Side slope
Down-slope shape: Linear
Across-slope shape: Linear
Ecological site: R067BY015CO - Deep Sand
Hydric soil rating: No

Olnest

Percent of map unit: 5 percent
Landform: Hillslopes
Landform position (two-dimensional): Backslope
Landform position (three-dimensional): Side slope
Down-slope shape: Linear
Across-slope shape: Linear

Ecological site: R067BY024CO - Sandy Plains
Hydric soil rating: No

7—Bijou sandy loam, 3 to 8 percent slopes

Map Unit Setting

National map unit symbol: 2tqxs
Elevation: 5,700 to 6,200 feet
Mean annual precipitation: 14 to 16 inches
Mean annual air temperature: 50 to 54 degrees F
Frost-free period: 130 to 170 days
Farmland classification: Not prime farmland

Map Unit Composition

Bijou and similar soils: 85 percent
Minor components: 15 percent
Estimates are based on observations, descriptions, and transects of the mapunit.

Description of Bijou

Setting

Landform: Sand sheets
Landform position (two-dimensional): Backslope
Landform position (three-dimensional): Side slope
Down-slope shape: Linear
Across-slope shape: Linear
Parent material: Eolian sands

Typical profile

A - 0 to 4 inches: sandy loam
Bt1 - 4 to 8 inches: sandy loam
Bt2 - 8 to 21 inches: sandy loam
Bw - 21 to 28 inches: sandy loam
C - 28 to 79 inches: loamy coarse sand

Properties and qualities

Slope: 3 to 8 percent
Depth to restrictive feature: More than 80 inches
Drainage class: Somewhat excessively drained
Capacity of the most limiting layer to transmit water (Ksat): High (2.00 to 6.00 in/hr)
Depth to water table: More than 80 inches
Frequency of flooding: None
Frequency of ponding: None
Maximum salinity: Nonsaline (0.1 to 0.2 mmhos/cm)
Available water capacity: Low (about 5.0 inches)

Interpretive groups

Land capability classification (irrigated): 6e
Land capability classification (nonirrigated): 6e
Hydrologic Soil Group: A

Ecological site: R067BY024CO - Sandy Plains
Hydric soil rating: No

Minor Components

Valent

Percent of map unit: 10 percent
Landform: Sand sheets
Landform position (two-dimensional): Backslope
Landform position (three-dimensional): Side slope
Down-slope shape: Linear
Across-slope shape: Linear
Ecological site: R067BY015CO - Deep Sand
Hydric soil rating: No

Olnest

Percent of map unit: 5 percent
Landform: Hillslopes
Landform position (two-dimensional): Backslope
Landform position (three-dimensional): Side slope
Down-slope shape: Linear
Across-slope shape: Linear
Ecological site: R067BY024CO - Sandy Plains
Hydric soil rating: No

8—Blakeland loamy sand, 1 to 9 percent slopes

Map Unit Setting

National map unit symbol: 369v
Elevation: 4,600 to 5,800 feet
Mean annual precipitation: 14 to 16 inches
Mean annual air temperature: 46 to 48 degrees F
Frost-free period: 125 to 145 days
Farmland classification: Not prime farmland

Map Unit Composition

Blakeland and similar soils: 98 percent
Minor components: 2 percent
Estimates are based on observations, descriptions, and transects of the mapunit.

Description of Blakeland

Setting

Landform: Hills, flats
Landform position (three-dimensional): Side slope, talf
Down-slope shape: Linear
Across-slope shape: Linear
Parent material: Alluvium derived from sedimentary rock and/or eolian deposits derived from sedimentary rock

Typical profile

A - 0 to 11 inches: loamy sand
AC - 11 to 27 inches: loamy sand
C - 27 to 60 inches: sand

Properties and qualities

Slope: 1 to 9 percent
Depth to restrictive feature: More than 80 inches
Drainage class: Somewhat excessively drained
Runoff class: Low
Capacity of the most limiting layer to transmit water (Ksat): High to very high (5.95 to 19.98 in/hr)
Depth to water table: More than 80 inches
Frequency of flooding: None
Frequency of ponding: None
Calcium carbonate, maximum content: 5 percent
Available water capacity: Low (about 4.5 inches)

Interpretive groups

Land capability classification (irrigated): 3e
Land capability classification (nonirrigated): 6e
Hydrologic Soil Group: A
Ecological site: R049XB210CO - Sandy Foothill
Hydric soil rating: No

Minor Components

Pleasant

Percent of map unit: 1 percent
Landform: Depressions
Hydric soil rating: Yes

Other soils

Percent of map unit: 1 percent
Hydric soil rating: No

28—Ellicott loamy coarse sand, 0 to 5 percent slopes

Map Unit Setting

National map unit symbol: 3680
Elevation: 5,500 to 6,500 feet
Mean annual precipitation: 13 to 15 inches
Mean annual air temperature: 47 to 50 degrees F
Frost-free period: 125 to 145 days
Farmland classification: Not prime farmland

Map Unit Composition

Ellicott and similar soils: 97 percent
Minor components: 3 percent
Estimates are based on observations, descriptions, and transects of the mapunit.

Description of Ellicott

Setting

Landform: Flood plains, stream terraces
Landform position (three-dimensional): Tread
Down-slope shape: Linear
Across-slope shape: Linear
Parent material: Sandy alluvium

Typical profile

A - 0 to 4 inches: loamy coarse sand
C - 4 to 60 inches: stratified coarse sand to sandy loam

Properties and qualities

Slope: 0 to 5 percent
Depth to restrictive feature: More than 80 inches
Drainage class: Somewhat excessively drained
Runoff class: Very low
Capacity of the most limiting layer to transmit water (Ksat): High to very high (5.95 to 19.98 in/hr)
Depth to water table: More than 80 inches
Frequency of flooding: FrequentNone
Frequency of ponding: None
Available water capacity: Low (about 4.1 inches)

Interpretive groups

Land capability classification (irrigated): None specified
Land capability classification (nonirrigated): 7w
Hydrologic Soil Group: A
Ecological site: R069XY031CO - Sandy Bottomland LRU's A & B
Other vegetative classification: SANDY BOTTOMLAND (069AY031CO)
Hydric soil rating: No

Minor Components

Other soils

Percent of map unit: 1 percent
Hydric soil rating: No

Fluvaquentic haplaquoll

Percent of map unit: 1 percent
Landform: Swales
Hydric soil rating: Yes

Pleasant

Percent of map unit: 1 percent
Landform: Depressions
Hydric soil rating: Yes

62—Olnest-Vona complex, cool, 1 to 6 percent slopes, eroded

Map Unit Setting

National map unit symbol: 2t51g
Elevation: 5,900 to 6,200 feet
Mean annual precipitation: 14 to 16 inches
Mean annual air temperature: 48 to 54 degrees F
Frost-free period: 130 to 170 days
Farmland classification: Not prime farmland

Map Unit Composition

Olnest, eroded, and similar soils: 45 percent
Vona, eroded, and similar soils: 40 percent
Minor components: 15 percent
Estimates are based on observations, descriptions, and transects of the mapunit.

Description of Olnest, Eroded

Setting

Landform: Hillslopes
Landform position (two-dimensional): Summit
Landform position (three-dimensional): Interfluve
Down-slope shape: Linear
Across-slope shape: Linear
Parent material: Eolian deposits and/or old alluvium

Typical profile

A - 0 to 2 inches: sandy loam
Bt - 2 to 21 inches: sandy clay loam
Bk - 21 to 26 inches: sandy clay loam
BCk - 26 to 79 inches: sandy loam

Properties and qualities

Slope: 1 to 5 percent
Depth to restrictive feature: More than 80 inches
Drainage class: Well drained
Capacity of the most limiting layer to transmit water (Ksat): Moderately high to high (0.20 to 2.00 in/hr)
Depth to water table: More than 80 inches
Frequency of flooding: None
Frequency of ponding: None
Calcium carbonate, maximum content: 15 percent
Maximum salinity: Nonsaline to very slightly saline (0.5 to 2.0 mmhos/cm)
Sodium adsorption ratio, maximum: 2.0
Available water capacity: Moderate (about 6.7 inches)

Interpretive groups

Land capability classification (irrigated): 4e
Land capability classification (nonirrigated): 4e
Hydrologic Soil Group: B

Ecological site: R067BY024CO - Sandy Plains
Forage suitability group: Loamy, Dry (G067BW019CO)
Other vegetative classification: Loamy, Dry (G067BW019CO)
Hydric soil rating: No

Description of Vona, Eroded

Setting

Landform: Sand sheets
Landform position (two-dimensional): Backslope
Landform position (three-dimensional): Side slope
Down-slope shape: Linear
Across-slope shape: Linear
Parent material: Eolian sands

Typical profile

A - 0 to 2 inches: sandy loam
Bt1 - 2 to 12 inches: sandy loam
Bt2 - 12 to 17 inches: sandy loam
Bk - 17 to 41 inches: sandy loam
BCk - 41 to 79 inches: loamy sand

Properties and qualities

Slope: 3 to 6 percent
Depth to restrictive feature: More than 80 inches
Drainage class: Somewhat excessively drained
Capacity of the most limiting layer to transmit water (Ksat): High (2.00 to 6.00 in/hr)
Depth to water table: More than 80 inches
Frequency of flooding: None
Frequency of ponding: None
Calcium carbonate, maximum content: 15 percent
Gypsum, maximum content: 2 percent
Maximum salinity: Nonsaline to slightly saline (0.5 to 4.0 mmhos/cm)
Sodium adsorption ratio, maximum: 2.0
Available water capacity: Moderate (about 7.2 inches)

Interpretive groups

Land capability classification (irrigated): 4e
Land capability classification (nonirrigated): 6e
Hydrologic Soil Group: A
Ecological site: R067BY024CO - Sandy Plains
Forage suitability group: Loamy, Dry (G067BW019CO)
Other vegetative classification: Sandy Plains #24 (067XY024CO_2), Loamy, Dry (G067BW019CO)
Hydric soil rating: No

Minor Components

Olnest, cool

Percent of map unit: 8 percent
Landform: Hillslopes
Landform position (two-dimensional): Summit
Landform position (three-dimensional): Interfluve
Down-slope shape: Linear
Across-slope shape: Linear
Ecological site: R067BY024CO - Sandy Plains

Other vegetative classification: Loamy, Dry (G067BW019CO)
Hydric soil rating: No

Vona, cool

Percent of map unit: 7 percent
Landform: Sand sheets
Landform position (two-dimensional): Backslope
Landform position (three-dimensional): Side slope
Down-slope shape: Linear
Across-slope shape: Linear
Ecological site: R067BY024CO - Sandy Plains
Other vegetative classification: Sandy Plains #24 (067XY024CO_2), Loamy, Dry (G067BW019CO)
Hydric soil rating: No

78—Sampson loam, 0 to 3 percent slopes

Map Unit Setting

National map unit symbol: 369s
Elevation: 5,500 to 6,500 feet
Mean annual precipitation: 13 to 15 inches
Mean annual air temperature: 47 to 50 degrees F
Frost-free period: 135 to 155 days
Farmland classification: Prime farmland if irrigated

Map Unit Composition

Sampson and similar soils: 95 percent
Minor components: 5 percent
Estimates are based on observations, descriptions, and transects of the mapunit.

Description of Sampson

Setting

Landform: Alluvial fans, terraces, depressions
Down-slope shape: Linear
Across-slope shape: Linear
Parent material: Alluvium

Typical profile

A - 0 to 15 inches: loam
Bt - 15 to 34 inches: clay loam
Bk - 34 to 60 inches: sandy clay loam

Properties and qualities

Slope: 0 to 3 percent
Depth to restrictive feature: More than 80 inches
Drainage class: Well drained
Runoff class: Low
Capacity of the most limiting layer to transmit water (Ksat): Moderately high to high (0.60 to 2.00 in/hr)

Depth to water table: More than 80 inches
Frequency of flooding: None
Frequency of ponding: None
Calcium carbonate, maximum content: 15 percent
Maximum salinity: Nonsaline to very slightly saline (0.0 to 2.0 mmhos/cm)
Available water capacity: High (about 9.2 inches)

Interpretive groups

Land capability classification (irrigated): 2e
Land capability classification (nonirrigated): 3c
Hydrologic Soil Group: B
Ecological site: R049XY202CO - Loamy Foothill
Hydric soil rating: No

Minor Components

Other soils

Percent of map unit: 4 percent
Hydric soil rating: No

Pleasant

Percent of map unit: 1 percent
Landform: Depressions
Hydric soil rating: Yes

101—Ustic Torrifluvents, loamy

Map Unit Setting

National map unit symbol: 3673
Elevation: 5,500 to 7,000 feet
Mean annual precipitation: 13 to 16 inches
Mean annual air temperature: 47 to 52 degrees F
Frost-free period: 125 to 155 days
Farmland classification: Not prime farmland

Map Unit Composition

Ustic torrifluvents and similar soils: 95 percent
Minor components: 5 percent
Estimates are based on observations, descriptions, and transects of the mapunit.

Description of Ustic Torrifluvents

Setting

Landform: Flood plains, stream terraces
Down-slope shape: Linear
Across-slope shape: Linear
Parent material: Sandy, clayey, stratified loamy

Typical profile

A - 0 to 6 inches: variable
C - 6 to 60 inches: stratified loamy sand to clay loam

Properties and qualities

Slope: 0 to 3 percent
Depth to restrictive feature: More than 80 inches
Drainage class: Well drained
Runoff class: Low
Capacity of the most limiting layer to transmit water (Ksat): Moderately high to high (0.20 to 2.00 in/hr)
Depth to water table: More than 80 inches
Frequency of flooding: None
Frequency of ponding: None
Calcium carbonate, maximum content: 10 percent
Maximum salinity: Nonsaline to very slightly saline (0.0 to 2.0 mmhos/cm)
Available water capacity: Moderate (about 8.6 inches)

Interpretive groups

Land capability classification (irrigated): 2e
Land capability classification (nonirrigated): 3e
Hydrologic Soil Group: B
Ecological site: R069XY037CO - Saline Overflow LRU's A & B
Other vegetative classification: OVERFLOW (069BY036CO)
Hydric soil rating: No

Minor Components

Other soils

Percent of map unit: 4 percent
Hydric soil rating: No

Pleasant

Percent of map unit: 1 percent
Landform: Depressions
Hydric soil rating: Yes

106—Wigton loamy sand, 1 to 8 percent slopes

Map Unit Setting

National map unit symbol: 3678
Elevation: 5,300 to 6,000 feet
Mean annual precipitation: 12 to 14 inches
Mean annual air temperature: 48 to 52 degrees F
Frost-free period: 135 to 155 days
Farmland classification: Not prime farmland

Map Unit Composition

Wigton and similar soils: 95 percent
Minor components: 5 percent
Estimates are based on observations, descriptions, and transects of the mapunit.

Description of Wigton

Setting

Landform: Dunes
Down-slope shape: Linear
Across-slope shape: Linear
Parent material: Noncalcareous, dune-like sandy eolian deposits

Typical profile

A - 0 to 8 inches: loamy sand
AC - 8 to 19 inches: loamy sand
C - 19 to 60 inches: sand

Properties and qualities

Slope: 1 to 8 percent
Depth to restrictive feature: More than 80 inches
Drainage class: Excessively drained
Runoff class: Low
Capacity of the most limiting layer to transmit water (Ksat): High to very high (5.95 to 19.98 in/hr)
Depth to water table: More than 80 inches
Frequency of flooding: None
Frequency of ponding: None
Available water capacity: Low (about 3.8 inches)

Interpretive groups

Land capability classification (irrigated): 4e
Land capability classification (nonirrigated): 6e
Hydrologic Soil Group: A
Ecological site: R067BY015CO - Deep Sand
Other vegetative classification: DEEP SANDS (069BY019CO)
Hydric soil rating: No

Minor Components

Other soils

Percent of map unit: 4 percent
Hydric soil rating: No

Pleasant

Percent of map unit: 1 percent
Landform: Depressions
Hydric soil rating: Yes

124—Olnest sandy loam, 0 to 3 percent slopes

Map Unit Setting

National map unit symbol: 2t51j
Elevation: 4,500 to 6,100 feet
Mean annual precipitation: 14 to 16 inches
Mean annual air temperature: 50 to 54 degrees F

Frost-free period: 130 to 170 days
Farmland classification: Prime farmland if irrigated

Map Unit Composition

Olnest and similar soils: 85 percent
Minor components: 15 percent
Estimates are based on observations, descriptions, and transects of the mapunit.

Description of Olnest

Setting

Landform: Sand sheets
Parent material: Eolian sands

Typical profile

A - 0 to 4 inches: sandy loam
Bt - 4 to 20 inches: sandy clay loam
Bk1 - 20 to 48 inches: sandy loam
Bk2 - 48 to 79 inches: very fine sandy loam

Properties and qualities

Slope: 0 to 3 percent
Depth to restrictive feature: More than 80 inches
Drainage class: Well drained
Runoff class: Low
Capacity of the most limiting layer to transmit water (Ksat): Moderately high to high (0.20 to 2.00 in/hr)
Depth to water table: More than 80 inches
Frequency of flooding: None
Frequency of ponding: None
Calcium carbonate, maximum content: 14 percent
Maximum salinity: Very slightly saline (2.0 to 3.9 mmhos/cm)
Available water capacity: Moderate (about 7.4 inches)

Interpretive groups

Land capability classification (irrigated): 3e
Land capability classification (nonirrigated): 4c
Hydrologic Soil Group: B
Ecological site: R067BY024CO - Sandy Plains
Hydric soil rating: No

Minor Components

Udic haplusterts, ponded

Percent of map unit: 5 percent
Landform: Closed depressions
Landform position (three-dimensional): Dip
Down-slope shape: Concave
Across-slope shape: Concave
Ecological site: R067BY010CO - Closed Upland Depression
Hydric soil rating: No

Otero

Percent of map unit: 5 percent
Landform: Hillslopes
Landform position (two-dimensional): Backslope
Landform position (three-dimensional): Side slope

Down-slope shape: Linear
Across-slope shape: Linear
Ecological site: R067BY024CO - Sandy Plains
Hydric soil rating: No

Vona

Percent of map unit: 5 percent
Landform: Sand sheets
Ecological site: R067BY024CO - Sandy Plains
Hydric soil rating: No

References

American Association of State Highway and Transportation Officials (AASHTO). 2004. Standard specifications for transportation materials and methods of sampling and testing. 24th edition.

American Society for Testing and Materials (ASTM). 2005. Standard classification of soils for engineering purposes. ASTM Standard D2487-00.

Cowardin, L.M., V. Carter, F.C. Golet, and E.T. LaRoe. 1979. Classification of wetlands and deep-water habitats of the United States. U.S. Fish and Wildlife Service FWS/OBS-79/31.

Federal Register. July 13, 1994. Changes in hydric soils of the United States.

Federal Register. September 18, 2002. Hydric soils of the United States.

Hurt, G.W., and L.M. Vasilas, editors. Version 6.0, 2006. Field indicators of hydric soils in the United States.

National Research Council. 1995. Wetlands: Characteristics and boundaries.

Soil Survey Division Staff. 1993. Soil survey manual. Soil Conservation Service. U.S. Department of Agriculture Handbook 18. http://www.nrcs.usda.gov/wps/portal/nrcs/detail/national/soils/?cid=nrcs142p2_054262

Soil Survey Staff. 1999. Soil taxonomy: A basic system of soil classification for making and interpreting soil surveys. 2nd edition. Natural Resources Conservation Service, U.S. Department of Agriculture Handbook 436. http://www.nrcs.usda.gov/wps/portal/nrcs/detail/national/soils/?cid=nrcs142p2_053577

Soil Survey Staff. 2010. Keys to soil taxonomy. 11th edition. U.S. Department of Agriculture, Natural Resources Conservation Service. http://www.nrcs.usda.gov/wps/portal/nrcs/detail/national/soils/?cid=nrcs142p2_053580

Tiner, R.W., Jr. 1985. Wetlands of Delaware. U.S. Fish and Wildlife Service and Delaware Department of Natural Resources and Environmental Control, Wetlands Section.

United States Army Corps of Engineers, Environmental Laboratory. 1987. Corps of Engineers wetlands delineation manual. Waterways Experiment Station Technical Report Y-87-1.

United States Department of Agriculture, Natural Resources Conservation Service. National forestry manual. http://www.nrcs.usda.gov/wps/portal/nrcs/detail/soils/home/?cid=nrcs142p2_053374

United States Department of Agriculture, Natural Resources Conservation Service. National range and pasture handbook. http://www.nrcs.usda.gov/wps/portal/nrcs/detail/national/landuse/rangepasture/?cid=stelprdb1043084

United States Department of Agriculture, Natural Resources Conservation Service. National soil survey handbook, title 430-VI. http://www.nrcs.usda.gov/wps/portal/nrcs/detail/soils/scientists/?cid=nrcs142p2_054242

United States Department of Agriculture, Natural Resources Conservation Service. 2006. Land resource regions and major land resource areas of the United States, the Caribbean, and the Pacific Basin. U.S. Department of Agriculture Handbook 296. http://www.nrcs.usda.gov/wps/portal/nrcs/detail/national/soils/?cid=nrcs142p2_053624

United States Department of Agriculture, Soil Conservation Service. 1961. Land capability classification. U.S. Department of Agriculture Handbook 210. http://www.nrcs.usda.gov/Internet/FSE_DOCUMENTS/nrcs142p2_052290.pdf

APPENDIX F - INSPECTION FORM

Appendix C Inspection Checklist – Grading Erosion, and Stormwater Quality Controls

CITY OF COLORADO SPRINGS

DATE/TIME:
INSPECTOR:
TYPE OF INSPECTION: Self-Monitoring_____ Initial _____ Compliance_____ Follow-Up_____ Reconnaissance_____ Complaint_____ Final____

SITE:	DATE OF PERMIT:
ADDRESS:	
CONTRACTOR: CONTACT: PHONE:	OWNER/OWNER'S REPRESENTATIVE: CONTACT: PHONE:
STAGE OF CONSTRUCTION: Initial BMP Installation/Prior to Construction_____ Clearing & Grubbing_____ Rough Grading_____ Finish Grading_____ Utility Construction_____ Building Construction_____ Final Stabilization_____	

OVERALL SITE INSPECTION	YES/NO/N.A.	REMARKS/ACTIONS
Is there any evidence of sediment leaving the construction site? If so, note areas.		
Have any adverse impacts such as flooding, structural damage, erosion, spillage, or accumulation of sediment, debris or litter occurred on or within public or private property, wetlands or surface waters –to include intermittent drainageways and the City's stormwater system (storm sewers, gutters, ditches, etc.)?		
Are the BMPs properly installed and maintained?		
Have the BMPs been placed as shown on approved plans?		
Are the BMPs functioning as intended?		
Is work being done according to approved plans and any phased construction schedule?		
Is the construction schedule on track?		
Are drainage channels and outlets adequately stabilized?		
Is there any evidence of discharges or spills of fuels, lubricants, chemicals, etc.?		

BMP MAINTENANCE CHECKLIST	YES/NO/N.A.	REMARKS/ACTIONS NECESSARY
CHECK DAM Has accumulated sediment and debris been removed per maintenance requirements?		
EROSION CONTROL BLANKET Is fabric damaged, loose or in need of repairs?		
INLET PROTECTION Is the inlet protection damaged, ineffective or in need of repairs? Has sediment been removed per maintenance requirements?		
MULCHING Distributed uniformly on all disturbed areas? Is the application rate adequate? Any evidence of mulch being blown or washed away? Has the mulched area been seeded, if necessary?		
SEDIMENT BASIN Is the sediment basin properly constructed and operational? Has sediment and debris been cleaned out of the basin?		
SILT FENCE Is the fence damaged, collapsed, unentrenched or ineffective? Has sediment been removed per maintenance requirements? Is the silt fence properly located?		
SLOPE DRAIN Is water bypassing or undercutting the inlet or pipe? Is erosion occurring at the outlet of the pipe?		
STRAW BALE BARRIER Are the straw bales damaged, ineffective or unentrenched? Has sediment been removed per maintenance requirements? Are the bales installed and positioned correctly?		

BMP MAINTENANCE CHECKLIST	YES/NO/N.A.	REMARKS/ACTIONS NECESSARY
SURFACE ROUGHENING Is the roughening consistent/uniform on slopes?? Any evidence of erosion?		
TEMPORARY SEEDING Are the seedbeds protected by mulch? Has any erosion occurred in the seeded area? Any evidence of vehicle tracking on seeded areas?		
TEMPORARY SWALES Has any sediment or debris been deposited within the swales? Have the slopes of the swale eroded or has damage occurred to the lining? Are the swales properly located?		
VEHICLE TRACKING Is gravel surface clogged with mud or sediment? Is the gravel surface sinking into the ground? Has sediment been tracked onto any roads and has it been cleaned up? Is inlet protection placed around curb inlets near construction entrance?		
OTHER		

FINAL INSPECTION CHECKLIST	YES/NO/N.A.	REMARKS/ACTIONS NECESSARY
Has all grading been completed in compliance with the approved Plan, and all stabilization completed, including vegetation, retaining walls or other approved measures?		
Has final stabilization been achieved – uniform vegetative cover with a density of at least 70 percent of pre-disturbance levels, and cover capable of adequately controlling soil erosion; or permanent, physical erosion methods?		
Have all temporary measures been removed?		
Have all stockpiles, construction materials and construction equipment been removed?		
Are all paved surfaces clean (on-site and off-site)?		
Has sediment and debris been removed from drainage facilities (on-site and off-site) and other off-site property, including proper restoration of any damaged property?		
Have all permanent stormwater quality BMPs been installed and completed?		

ADDITIONAL COMMENTS:

The items noted as needing action must be remedied no later than _____. The contractor shall notify the inspector when all the items noted above have been addressed.

By signing this inspection form, the owner/owner's representative and the contractor acknowledge that they have received a copy of the inspection report and are aware it is their responsibility to take corrective actions by the date noted above. Failure to sign does not relieve the contractor and owner/owner's representative of their responsibility to take the necessary corrective action and of their liability for any damages that have occurred or may occur.

INSPECTOR'S SIGNATURE:	DATE:
OWNER/OWNER'S REPRESENTATIVE SIGNATURE:	DATE:
CONTRACTOR'S SIGNATURE:	DATE:

APPENDIX G - RECORD OF REVISIONS

Cherokee TDS Reduction Facility
Stormwater Management Plan

RECORD OF REVISIONS

Name of Permittee: Cherokee Metropolitan District

Construction Site Name: TDS Reduction Facility

Inspector: _____ Title: _____

Date	Sections Modified	Description of Modification	Approval Signatures

APPENDIX H - SPILL REPORTING

Procedures for Determining if a Hazardous Material Spill is a Reportable Quantity

1) First determine the type and quantity of material that has been spilled.

2) Obtain a Safety Data Sheet (SDS) for the spilled material and determine whether any of the constituents are listed in Table 302.4 in 40 CFR 302.

3) If none of the constituents in the spilled material are listed in the table (excluding ethylene glycol), the spill is not reportable.

4) If the constituents in the spilled material are listed in the table, use the following equation to determine the pounds of material spilled:

$$\text{Pounds Spilled} = (V)\ (Wt\%)\ (Sg)\ (0.0834)$$

Where:

V = Volume of the material spilled, in gallons

Wt% = The weight percent of the constituents in the spilled material (see the SDS)

Sg = Specific gravity of spilled material (see SDS)

For Example:

V = 7 gallons

Wt% = 3.5

Sg = 1.04

Pounds Spilled = (7) (3.5) (1.04) (0.0834) = 2.13 pounds

5) If, based on the calculation, the pounds spilled are greater than the Final RQ (reportable quantity) value listed in Table 302.4 of 40 CFR 302 or the State's reportable quantity minimum amount, the spill must be reported to the appropriate federal, state, and local agencies.

Cherokee TDS Reduction Facility
Stormwater Management Plan

SPILL REPORT FORM

Spill Reported By: _____ _____
Name Phone Number

Date Reported: _____ Time: _____

Date of Spill: _____ Time: _____

Name of Facility: _____

Legal Description: ____ 1/4 ___ 1/4 ____ 1/4 SEC ____, TWP ____, Range ____,

County _____

Describe Spill Location and Events Leading to Spill: _____

_____

_____

_____

Material Spilled: _____

Source of Spill: _____

Amount Spilled (Gallons or Pounds): _____

Amount Spilled to Waterway (Gallons or Pounds): _____

Nearest Municipality: _____

Containment or Cleanup Action: _____

_____

List Environmental Damage (fish kill, etc.): _____

_____

List Injuries or Personal Contamination: _____

_____

Date and Time Cleanup Completed or Terminated: _____

If Cleanup Delayed, Nature and Duration of Delay: _____

_____

Description of Materials Contaminated: _____

_____

Approximate Depth of Soil Excavation: _____

Action To Be Taken to Prevent Future Spills: _____

_____

_____

Agencies Notified:

Local: _____ Date: _____

State: _____ Date: _____

Federal: _____ Date: _____

Signed: _____
Contractor Superintendent or
Environmental Inspector

CREATE AMAZING.

Burns & McDonnell World Headquarters
9400 Ward Parkway
Kansas City, MO 64114
O 816-333-9400
F 816-333-3690
www.burnsmcd.com