WATER & WASTEWATER CONSTRUCTION PLANS
FALCON MEADOWS AT BENT GRASS FILING NO. 1
FALCON, CO 80831 - EL PASO COUNTY
CHALLENGER COMMUNITIES, LLC

PROJECT CONTACTS

OWNER/DEVELOPER
CHALLENGER COMMUNITIES, LLC
13570 NORTHGATE ESTATES DR.
COLORADO SPRINGS, CO 80921
TELE: (719) 598-5190
ATTN: LEE EISENHEIM
EMAIL: LEISENHEIM@MYCHALLENGERHOMES.COM

APPLICANT
NES, INC.
619 NORTH CASCADE AVENUE, SUITE 200
COLORADO SPRINGS, CO 80903
TELE: (719) 471-0073
ATTN: ERIN GANAWAY
EMAIL: EGANAWAY@NESCOLORADO.COM

CIVIL ENGINEER
GALLOWAY & CO., INC.
1155 KELLY JOHNSON BLVD., SUITE 305
COLORADO SPRINGS, CO 80920
TELE: (719) 900-7220
ATTN: GRANT DENNIS, P.E.
EMAIL: GRANTDENNIS@GALLOWAYUS.COM

GEOTECHNICAL ENGINEER
ROCKY MOUNTAIN GROUP
2910 AUSTIN BLUFFS PKWY
COLORADO SPRINGS, CO 80918
TELE: (719) 394-3072
ATTN: TONY MUNGER, P.E.
EMAIL: TMUNGER@RMG-ENGINEERS.COM

TRAFFIC ENGINEER
LSC TRANSPORTATION CONSULTANTS, INC.
545 EAST PIKES PEAK AVENUE, SUITE 210
COLORADO SPRINGS, CO 80903
TELE: (719) 633-2868
ATTN: JEFFREY C. HODSON, P.E.
EMAIL: JEFF@LSCTRANS.COM

SURVEYOR
GALLOWAY & CO., INC.
1155 KELLY JOHNSON BLVD., SUITE 305
COLORADO SPRINGS, CO 80920
TELE: (719) 337-1262
ATTN: BRIAN DENNIS
EMAIL: BRIANDENNIS@GALLOWAYUS.COM

UTILITY CONTACTS

WATER & WASTEWATER
WOODMEN HILLS METRO DISTRICT
8046 EASTONVILLE ROAD
FALCON, CO 80831
TELE: (719) 495-2500
ATTN: JERRY JACOBSON
EMAIL: JERRY@WHMD.ORG

ELECTRIC
MOUNTAIN VIEW ELECRIC
11140 E WOODMEN RD
FALCON, CO 80831
TELE: (719) 495-2283
CATHY HANSEN-LEE
EMAIL: CATHY.H@MVEA.COOP

NATURAL GAS
COLORADO SPRINGS UTILITIES (CSU)
7710 DURANT DRIVE, P.O. BOX 1103, MAIL CODE 2150
COLORADO SPRINGS, CO 80947-2150
TELE: (719) 668-5573
AARON CASSO
EMAIL: ACASSIO@CSU.ORG

FIRE
FALCON FIRE PROTECTION DISTRICT
7030 OLD MERIDIAN ROAD
PEYTON, CO 80831
TELE: (719) 495-4050
EMAIL: FALCONFIRE@FALCONFIREPD.ORG

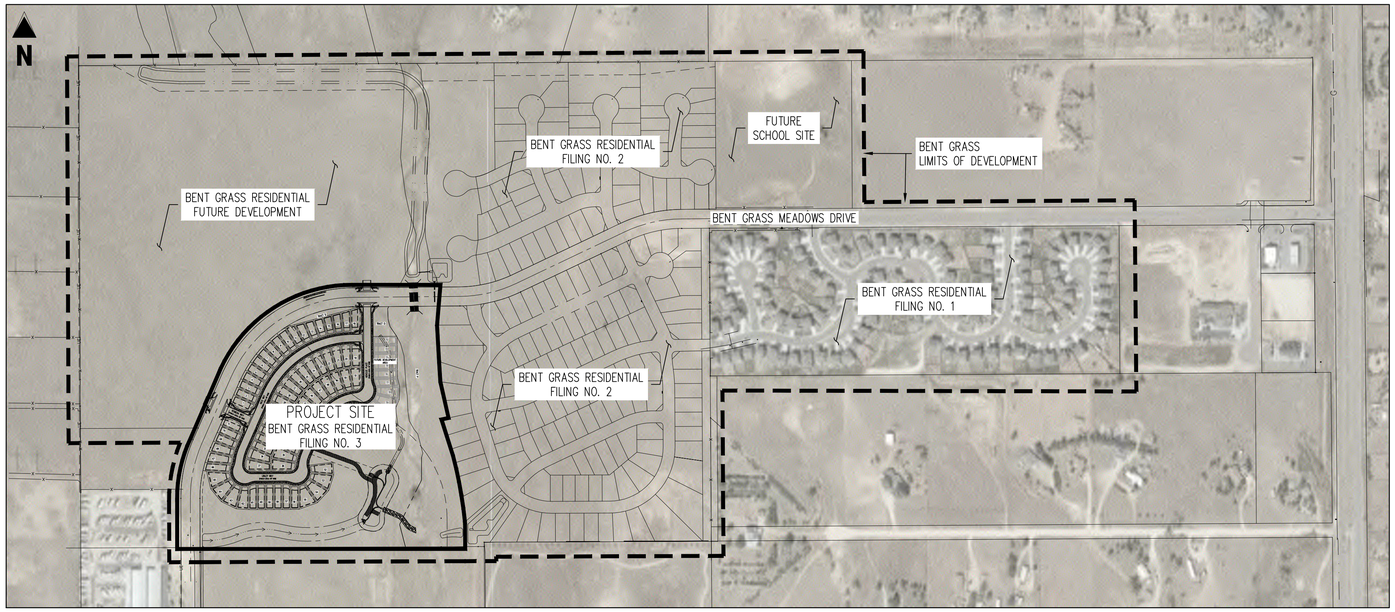

SITE MAP
SCALE: 1"=300'

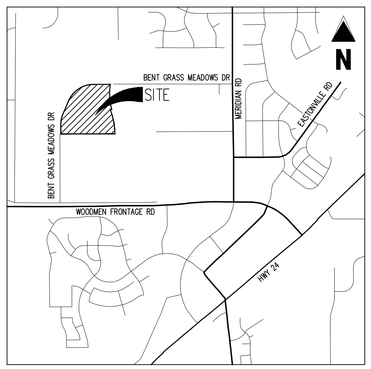

VICINITY MAP
1"=2,000'

SHEET INDEX		
SHEET NUMBER	SHEET TITLE	SHEET DESCRIPTION
1	UTILITY COVER SHEET	U0.0
2	UTILITY NOTES AND TYPICAL SECTION	U0.1
3	OVERALL UTILITY LAYOUT	U0.2
4	HORIZONTAL CONTROL PLAN	U0.3
5	WATER PLAN KEY MAP	U1.0
6	WATER PLAN	U1.1
7	WATER PLAN	U1.2
8	WASTEWATER PLAN KEY MAP	U2.0
9	WASTEWATER PLAN & PROFILE	U2.1
10	WASTEWATER PLAN & PROFILE	U2.2
11	WASTEWATER PLAN & PROFILE	U2.3
12	WASTEWATER PLAN & PROFILE	U2.4
13	WASTEWATER PLAN & PROFILE	U2.5
14	WASTEWATER PLAN & PROFILE	U2.6
15	WATER DETAIL SHEET 1	U3.1
16	WATER DETAIL SHEET 2	U3.2
17	WATER DETAIL SHEET 3	U3.3
18	WASTEWATER DETAIL SHEET 1	U3.4
19	WASTEWATER DETAIL SHEET 2	U3.5

U0.4 and U0.5

SEE FALCON MEADOWS AT BENT GRASS FILING NO. 1, ROADWAY AND STORM SEWER CONSTRUCTION PLANS FOR ALL STREET AND STORM DRAIN IMPROVEMENTS

SEE FALCON MEADOWS AT BENT GRASS FILING NO. 1, GRADING & EROSION CONTROL PLANS FOR GRADING, EROSION CONTROL, AND POND IMPROVEMENTS

21 sheets?

WATER AND SEWER MAIN EXTENSIONS:

ANY CHANGES OR ALTERATIONS AFFECTING THE GRADE, ALIGNMENT, ELEVATION AND/OR DEPTH OF COVER OF ANY WATER OR SEWER MAINS OR OTHER APPURTENANCE SHOWN ON THIS DRAWING SHALL BE THE RESPONSIBILITY OF THE OWNER/DEVELOPER. THE OWNER/DEVELOPER SHALL BE RESPONSIBLE FOR ALL OPERATIONAL DAMAGES AND DEFECTS IN INSTALLATION AND MATERIAL FOR MAINS AND SERVICES FROM THE DATE OF APPROVAL UNTIL FINAL ACCEPTANCE IS ISSUED.

SIGNED _____ OWNER/DEVELOPER DATE 4/15/21

PRINT NAME Jim Byers

DBA Challenger Communities, LLC

ADDRESS 8605 Explorer Dr.
Colorado Springs, CO 80831

FIRE AUTHORITY APPROVAL:

THE NUMBER OF FIRE HYDRANTS AND HYDRANT LOCATIONS SHOWN ON THIS WATER INSTALLATION PLAN ARE CORRECT AND ADEQUATE TO SATISFY THE FIRE PROTECTION REQUIREMENTS AS SPECIFIED BY THE FIRE DISTRICT SERVING THE PROPERTY NOTED ON THE PLANS.

FIRE PROTECTION DISTRICT Falcon Fire Protection District

SIGNED _____ FIRE PROTECTION DISTRICT DATE 4/15/2021

DISTRICT APPROVALS:

THE WOODMEN HILLS METROPOLITAN DISTRICT RECOGNIZES THE DESIGN ENGINEER AS HAVING RESPONSIBILITY FOR THE DESIGN AND HAS LIMITED ITS SCOPE OF REVIEW ACCORDINGLY.

WOODMEN HILLS METROPOLITAN DISTRICT
WATER DESIGN APPROVAL

DATE: 4/7/21 BY: _____

PROJECT NO. _____

IN CASE OF ERRORS OR OMISSIONS WITH THE WATER DESIGN AS SHOWN ON THIS DOCUMENT THE STANDARDS AS DEFINED IN THE RULES AND REGULATIONS FOR INSTALLATION OF WATER MAINS AND SERVICES' SHALL RULE.

APPROVAL EXPIRES 180 DAYS FROM DESIGN APPROVAL.

THE WOODMEN HILLS METROPOLITAN DISTRICT RECOGNIZES THE DESIGN ENGINEER AS HAVING RESPONSIBILITY FOR THE DESIGN AND HAS LIMITED ITS SCOPE OF REVIEW ACCORDINGLY.

WOODMEN HILLS METROPOLITAN DISTRICT
WASTEWATER DESIGN APPROVAL:

DATE: 4/7/21 BY: _____

PROJECT NO. _____

IN CASE OF ERRORS OR OMISSIONS WITH THE WATER DESIGN AS SHOWN ON THIS DOCUMENT THE STANDARDS AS DEFINED IN THE RULES AND REGULATIONS FOR INSTALLATION OF WASTEWATER MAINS AND SERVICES' SHALL RULE.

APPROVAL EXPIRES 180 DAYS FROM DESIGN APPROVAL.

ENGINEERS STATEMENT:

THESE DETAILED PLANS AND SPECIFICATIONS WERE PREPARED UNDER MY DIRECTION AND SUPERVISION. SAID DETAILS AND SPECIFICATIONS HAVE BEEN PREPARED ACCORDING TO THE CRITERIA ESTABLISHED BY THE STATE OF COLORADO.

RONALD G. DENNIS, COLORADO P.E. NO. 0051622 — 04/07/2021 DATE

EL PASO COUNTY

COUNTY PLAN REVIEW IS PROVIDED ONLY FOR GENERAL CONFORMANCE WITH COUNTY DESIGN CRITERIA. THE COUNTY IS NOT RESPONSIBLE FOR THE ACCURACY AND ADE□ UACY OF THE DESIGN, DIMENSIONS, AND/OR ELEVATIONS WHICH SHALL BE CONFIRMED AT THE JOB SITE. THE COUNTY THROUGH THE APPROVAL OF THIS DOCUMENT ASSUMES NO RESPONSIBILITY FOR COMPLETENESS AND/OR ACCURACY OF THIS DOCUMENT FILED IN ACCORDANCE WITH THE RE□ UIREMENTS OF THE EL PASO COUNTY LAND DEVELOPMENT CODE, DRAINAGE CRITERIA MANUAL, VOLUMES 1 AND 2, AND ENGINEERING CRITERIA MANUAL AS AMENDED.

IN ACCORDANCE WITH ECM SECTION 1.12, THESE CONSTRUCTION DOCUMENTS WILL BE VALID FOR CONSTRUCTION FOR A PERIOD OF 2 YEARS FROM THE DATE SIGNED BY THE EL PASO COUNTY ENGINEER. IF CONSTRUCTION HAS NOT STARTED WITHIN THEOSE 2 YEARS, THE PLANS WILL NEED TO BE RESUBMITTED FOR APPROVAL, INCLUDING PAYMENT OF REVIEW FEES AT THE PLANNING AND COMMUNITY DEVELOPMENT DIRECTORS DISCRETION.

JENNIFER IRVINE, P.E. — DATE
COUNTY ENGINEER/ECM ADMINISTRATOR

BASIS OF BEARINGS

ALL BEARINGS ARE GRID BEARINGS OF THE COLORADO STATE PLANE COORDINATE SYSTEM, CENTRAL ZONE, NORTH AMERICAN DATUM 1983. THE BEARING OF THE LINE BETWEEN THE SOUTHWEST CORNER OF SECTION 1, T13S, R65W AND THE WEST QUARTER CORNER SECTION 1, T13S, R65W IS N00°13'46"W AND MONUMENTED AS SHOWN:

BENCHMARK

THE SOUTHWESTERLY CORNER OF LOT 1 WOODMEN HILLS FILING NO. 4. MONUMENTED BY A YELLOW PLASTIC SURVEYORS CAP ON A NO. 4 REBAR LS# 24954 ELEVATION = 6947.67

CAUTION – NOTICE TO CONTRACTOR

1. ALL UTILITY LOCATIONS SHOWN ARE BASED ON MAPS PROVIDED BY THE APPROPRIATE UTILITY COMPANY AND FIELD SURFACE EVIDENCE AT THE TIME OF SURVEY AND IS TO BE CONSIDERED AN APPROXIMATE LOCATION ONLY. IT IS THE CONTRACTOR'S RESPONSIBILITY TO FIELD VERIFY THE FIELD LOCATION OF ALL UTILITIES, PUBLIC OR PRIVATE, WHETHER SHOWN ON THE PLANS OR NOT, PRIOR TO CONSTRUCTION. REPORT ANY DISCREPANCIES TO THE ENGINEER PRIOR TO CONSTRUCTION.
2. WHERE A PROPOSED UTILITY CROSSES AN EXISTING UTILITY, IT IS THE CONTRACTOR'S RESPONSIBILITY TO FIELD VERIFY THE HORIZONTAL AND VERTICAL LOCATION OF SUCH EXISTING UTILITY, EITHER THROUGH POTHOLING OR ALTERNATIVE METHOD. REPORT INFORMATION TO THE ENGINEER PRIOR TO CONSTRUCTION.

811 Know what's below. Call before you dig.

Galloway
1155 Kelly Johnson Blvd., Suite 305
Colorado Springs, CO 80920
719.900.7220
GallowayUS.com

COLORADO LICENSED RONALD GRANT DENNIS 37970 PROFESSIONAL ENGINEER
04/07/2021

COPYRIGHT
THESE PLANS ARE AN INSTRUMENT OF SERVICE AND ARE THE PROPERTY OF GALLOWAY, AND MAY NOT BE DUPLICATED, DISCLOSED, OR REPRODUCED WITHOUT THE WRITTEN CONSENT OF GALLOWAY. COPYRIGHTS AND INFRINGEMENTS WILL BE ENFORCED AND PROSECUTED.

CHALLENGER HOMES

WATER & WASTEWATER CONSTRUCTION PLANS
FALCON MEADOWS AT BENT GRASS FILING NO. 1
FOR
CHALLENGER COMMUNITIES, LLC

BENT GRASS MEADOWS DRIVE & MERIDIAN ROAD
FALCON, CO 80831 - EL PASO COUNTY

#	Date	Issue / Description	Init.

Project No:	CLH000018
Drawn By:	CMWJ
Checked By:	RGD
Date:	03/26/2021

UTILITY COVER SHEET

U0.0
Sheet 1 of 21

H:\Challenger Homes Inc\03. El Paso County\CLH000018\Bent Grass Filing 3\CAD\COVER\COVER.dwg, Caleb Johnson, 3/26/2021

GENERAL NOTES:

1. ALL UTILITY CONSTRUCTION TO BE CONDUCTED IN CONFORMANCE WITH THE CURRENT WOODMEN HILLS METROPOLITAN DISTRICT (WHMD, THE DISTRICT) SPECIFICATIONS.

2. ALL PLANS ON THE JOB SITE SHALL BE SIGNED BY THE DISTRICT AND THE DISTRICTS ENGINEER. ANY REVISION TO THE PLANS SHALL BE SO NOTED WITH THE OLD DRAWING MARKED NOT VALID.

3. ALL STATIONING IS CENTER LINE UNLESS OTHERWISE NOTED. ALL ELEVATIONS ARE CENTER LINE UNLESS OTHERWISE NOTED.

4. ALL MATERIALS AND WORKMANSHIP SHALL BE SUBJECT TO INSPECTION BY THE DISTRICT. THE DISTRICT RESERVES THE RIGHT TO ACCEPT OR REJECT ANY SUCH MATERIALS AND WORKMANSHIP THAT DOES NOT CONFORM TO ITS STANDARDS AND SPECIFICATIONS.

5. ALL WATER AND SEWER SERVICE LOCATIONS SHALL BE CLEARLY MARKED ON EITHER THE CURB HEAD OR THE FACE OF THE CURB, WITH AN 'S' FOR SEWER AND A 'W' FOR WATER.

6. DUCTILE IRON PIPES, INCLUDING FITTINGS, VALVES AND FIRE HYDRANTS, SHALL BE WRAPPED WITH POLYETHYLENE TUBING, DOUBLE BONDED AT EACH JOINT AND ELECTRICALLY ISOLATED. BONDING AND ANODE CONNECTIONS SHALL BE THOROUGHLY COATED WITH BITUMINOUS COATINGS.

7. ALL DUCTILE IRON PIPE LESS THAN 12 INCHES AND FITTINGS SHALL HAVE CATHODIC PROTECTION USING TWO NO. 6 WIRES WITH 17 LB. MAGNESIUM ANODES EVERY 400 FEET AND 9 LB. MAGNESIUM ANODES AT EACH FITTING. ALL DUCTILE IRON PIPE 12 INCHES AND GREATER AND FITTINGS SHALL HAVE CATHODIC PROTECTION USING TWO NO. 6 WIRES WITH 17 LB. MAGNESIUM ANODES EVERY 300 FEET AND 9 LB. MAGNESIUM ANODES AT EACH FITTING.

8. ALL PIPE MATERIAL, BACKFILL AND INSTALLATION SHALL CONFORM TO THE APPLICABLE SPECIFICATIONS OF THE CITY OF COLORADO SPRINGS, COLORADO DEPARTMENT OF TRANSPORTATION, EL PASO COUNTY DEPARTMENT OF TRANSPORTATION, COLORADO SPRINGS UTILITIES AND THE GEOTECHNICAL ENGINEER.

9. COMPACTION TESTS SHALL BE 95% STANDARD PROCTOR AS DETERMINED BY ASTM D698, UNLESS OTHERWISE APPROVED BY THE DISTRICT OR HIGHER STANDARD AS IMPOSED BY ANOTHER AGENCIES HAVING RIGHT-OF-WAY JURISDICTION. THIS SHALL INCLUDE ALL VALVES, FIRE HYDRANT RUNS, WATER & SEWER SERVICE LINES AND MANHOLES. ALL REPORTS SHALL BE SUBMITTED TO THE DISTRICT FOR REVIEW AND APPROVAL.

10. THE LOCATION OF ALL EXISTING UTILITIES SHOWN ON THE DRAWINGS ARE APPROXIMATE ONLY. THE LOCATION OF ALL UTILITIES SHALL BE FIELD VERIFIED PRIOR TO COMMENCING CONSTRUCTION ACTIVITIES. THE DISTRICT SHALL BE NOTIFIED OF ANY DEVIATIONS TO THE LINE AND/OR GRADE AS DEPICTED ON THE PLANS. CONTRACTOR SHALL SUBMIT TO THE DISTRICT AND THE ENGINEER OF RECORD A REPORT OF THE FIELD VERIFIED INFORMATION PRIOR TO THE START OF CONSTRUCTION.

11. ALL BENDS SHALL BE FIELD STAKED PRIOR TO THE START OF CONSTRUCTION.

12. BENDS, DEFLECTION & CUT PIPE LENGTHS SHALL BE USED TO HOLD HORIZONTAL ALIGNMENT OF SEWER AND WATER LINES TO NO MORE THAN 0.5' FROM THE DESIGNED ALIGNMENT. CONSTRUCTION STAKES TO BE AT 25' INTERVALS ALONG CURVES TO ASSURE LOCATION OF PIPE LINE CONSTRUCTION.

13. AT ALL LOCATIONS WHERE CAP AND STUB IS NOTED ON DRAWINGS, PROVIDE A PLUG AT THE END OF THE PIPE JOINT NEAREST THE SPECIFIED STATION. PROVIDE A REVERSE ANCHOR AT ALL WATER LINE PLUGS.

14. ALL UNUSED SALVAGED WATER UTILITY MATERIAL SHALL BE RETURNED TO THE METROPOLITAN DISTRICT AS REQUESTED.

15. AT THE CONTRACTOR'S EXPENSE, ALL UTILITY MAINS SHALL BE SUPPORTED AND PROTECTED SUCH THAT THEY SHALL FUNCTION CONTINUOUSLY DURING CONSTRUCTION OPERATIONS. SHOULD A UTILITY MAIN FAIL AS A RESULT OF THE CONTRACTOR'S OPERATION, IT SHALL BE REPLACED IMMEDIATELY BY THE CONTRACTOR OR BY THE DISTRICT AT FULL COST OF LABOR AND MATERIALS TO THE CONTRACTOR/DEVELOPER.

16. PUMPING OR BYPASS OPERATIONS SHALL BE REVIEWED AND APPROVED BY BOTH THE DISTRICT AND THE DISTRICT ENGINEER PRIOR TO EXECUTION.

17. THE CONTRACTOR SHALL REPLACE OR REPAIR DAMAGE TO ALL SURFACE IMPROVEMENTS, INCLUDING BUT NOT LIMITED TO FENCES, LANDSCAPING, CURB AND GUTTER AND/OR ASPHALT THAT MAY BE CAUSED DURING CONSTRUCTION.

18. ALL CONTRACTORS WORKING ON OR NEAR A WATER OR SEWER FACILITY (TO INCLUDE SERVICE LINES) SHALL HAVE LIABILITY INSURANCE NAMING THE DISTRICT AS AN ADDITIONAL INSURED AND SHALL PROVIDE A CURRENT COPY OF WORKERS COMPENSATION INSURANCE ON FILE WITH THE DISTRICT. NO WORK CAN PROCEED WITHOUT CURRENT CERTIFICATES ON FILE AT THE DISTRICTS' OFFICE.

19. THE CONTRACTOR SHALL NOTIFY THE DISTRICT AND ALL AFFECTED UTILITY COMPANIES ADJACENT TO THE PROPOSED UTILITY CONSTRUCTION A MINIMUM OF 48 HOURS AND A MAXIMUM OF 96 HOURS PRIOR TO THE START OF CONSTRUCTION. A WEEKLY CONSTRUCTION MEETING SHALL BE REQUIRED WITH THE CONTRACTOR, DISTRICT ENGINEER AND ALL OTHER PARTIES AS DEEMED NECESSARY BY THE DISTRICT.

20. COMMENCEMENT OF CONSTRUCTION OF WATER/SEWER SYSTEMS WITHIN METROPOLITAN DISTRICT:

A) PRIOR TO THE START OF CONSTRUCTION, A PRE-CONSTRUCTION MEETING IS REQUIRED A MINIMUM OF 48 HOURS IN ADVANCE OF COMMENCEMENT OF WORK. A REPRESENTATIVE OF THE OWNER OR DEVELOPER, A REPRESENTATIVE OF THE CONTRACTOR AND DESIGN ENGINEER ARE REQUIRED TO ATTEND. CONTACT THE DISTRICT TO SCHEDULE THE PRE-CONSTRUCTION MEETING. NO PRE-CONSTRUCTION MEETING CAN BE SCHEDULED PRIOR TO FOUR (4) SIGNED/APPROVED PLAN SETS ARE RECEIVED BY THE DISTRICT.

B) THE CONTRACTOR IS REQUIRED TO NOTIFY THE DISTRICT A MINIMUM OF 48 HOURS AND A MAXIMUM OF 2 WEEKS PRIOR TO THE START OF CONSTRUCTION. THE CONTRACTOR SHALL ALSO NOTIFY AFFECTED UTILITY COMPANIES AT LEAST 48 HOURS PRIOR TO THE START OF CONSTRUCTION ADJACENT TO THE KNOWN UTILITY LINES.

21. TESTING OF FACILITIES:

A) THE CONTRACTOR SHALL NOTIFY THE DISTRICT A MINIMUM OF 48 HOURS AND A MAXIMUM OF 96 HOURS PRIOR TO THE START OF ANY TESTING.

B) ALL SECTIONS OF WATER LINE ARE TO MEET THE FOLLOWING PRESSURE TESTING REQUIREMENTS

- TEST 100 % OF ALL LINES
- MUST PASS PRESSURE TEST TO 200 PSI FOR TWO HOURS (UNLESS OTHERWISE APPROVED ON THE PLANS).

C) ALL SANITARY SEWER FACILITIES ARE TO MEET THE FOLLOWING TESTING REQUIREMENTS

- ALL LINES SHALL BE JET CLEANED PRIOR TO VACUUM OR PRESSURE TESTING
- ALL MANHOLES SHALL BE VACUUM TESTED WITH DISTRICT STAFF PRESENT PRIOR TO CCTV INSPECTION.
- SEWER MAINS TO BE PRESSURE TEST PRIOR TO CCTV INSPECTION
- ALL LINES SHALL BE CCTV INSPECTED AND VIDEO SHALL TO BE SUBMITTED TO THE DISTRICT FOR REVIEW AND APPROVAL.

22. PRELIMINARY ACCEPTANCE SHALL BE DEFINED AS THE POINT IN TIME THAT THE DISTRICT ACCEPTS THE FACILITY FOR USE. ALL SURFACE IMPROVEMENTS AND RESTORATION SHALL BE COMPLETED WITHIN 30 DAYS OF COMMENCEMENT. SHOULD THE CONTRACTOR FAIL TO COMPLETE ALL SURFACE IMPROVEMENTS AND RESTORATION WITHIN 30 DAYS OF COMMENCEMENT OF SERVICE, THE DISTRICT, AT THEIR DISCRETION, MAY ELECT TO COMPLETE THE IMPROVEMENTS AT THE CONTRACTORS COST.

23. FINAL ACCEPTANCE BY THE DISTRICT OF ANY LINE OR SYSTEM SHALL NOT OCCUR UNTIL COMPLETION OF FINAL ASPHALT LAYERS AND/OR FINAL COMPLETION AND/OR RESTORATION OF ALL SURFACE IMPROVEMENTS. THE WARRANTY PERIOD FOR ALL FACILITIES PRIOR TO FINAL ACCEPTANCE SHALL BE 24 MONTHS COMMENCING AFTER PRELIMINARY ACCEPTANCE.

24. ACCEPTANCE:

A) THE DISTRICT MAY GIVE PRELIMINARY ACCEPTANCE ONCE ALL OF THE TESTS ON ALL THE LINES HAVE BEEN COMPLETED AND A WALK-THRU HAS OCCURRED.

B) A SECOND ACCEPTANCE MAY OCCUR ONCE FIRST LIFT OF ASPHALT GOES DOWN AND A SECOND WALK-THRU OF THE SYSTEM OCCURS. IF ALL FACILITIES ARE CLEAN AND ACCESSIBLE, A FINAL ACCEPTANCE MAY OCCUR (THE DISTRICT MAY REQUIRE CLEANING AND RE-VIDEO OF THE SYSTEM, DEPENDING ON THE SEVERITY OF THE CONTAMINATION).

25. ALL WATER AND SEWER MAINS, INCLUDING SERVICE LINES, SHALL HAVE "AS-BUILT" DRAWINGS PREPARED AND APPROVED PRIOR TO PRELIMINARY ACCEPTANCE BY THE DISTRICT.

26. ALL COMMERCIAL/BUSINESS DEVELOPMENTS SHALL HAVE AN EIGHT INCH (MIN.) WATER MAIN LOOPED THROUGH THE PROPOSED PROPERTY WITH GATE VALVES LOCATED WHERE THE MAIN ENTERS THE PROPERTY LINE. AN EIGHT INCH SEWER MAIN SHALL BE INSTALLED FOR SERVICE TO COMMERCIAL/BUSINESS DEVELOPMENTS, AND A MANHOLE SHALL BE LOCATED WHERE THE MAIN ENTERS THE PROPERTY. THE END OF THE MAINS SHALL BE MARKED WITH THE APPROPRIATE COLORED CARSONITE MARKER ALONG WITH TRACER WIRE.

27. AFTER REVIEW AND APPROVAL OF PLANS FOR THE EXTENSION OF LINES, FACILITIES AND/OR SERVICES, CONSTRUCTION MUST BE COMMENCED WITHIN 18 MONTHS FOR RESIDENTIAL SUBDIVISIONS AND 12 MONTHS FOR ANY COMMERCIAL INSTALLATIONS.

28. INSPECTION FEES: CALL THE DISTRICT (719-495-2500) FOR FEE SCHEDULE.

WATER SYSTEM INSTALLATION NOTES

29. ALL WATER AND FORCE MAIN PIPE SHALL BE AWWA C900 PVC, OR EQUAL, PRESSURE CLASS 200. ALL WATER AND FORCE MAIN FITTINGS SHALL HAVE MECHANICAL RESTRAINTS AND THRUST BLOCKS. ALL WATER AND FORCE MAIN PIPE SHALL HAVE A MINIMUM COVER DEPTH OF FIVE AND ONE-HALF (5.5) FEET.

30. ALL WATER VALVES ASSOCIATED WITH THE POTABLE WATER SYSTEM SHALL BE OPEN CLOCKWISE. ALL VALVES INSTALLED IN LANDSCAPED AREAS AND/OR NOT WITHIN PAVED STREETS SHALL BE MARKED WITH CARSONITE MARKERS. ALL VALVES ASSOCIATED WITH THE RAW WATER SYSTEM SHALL BE OPEN COUNTERCLOCKWISE AND MARKED WITH CARSONITE MARKERS AS APPLICABLE.

31. THE DEVELOPER OR HIS ENGINEER SHALL LOCATE ALL FIRE HYDRANTS AND SERVICE STUB OUTS FOR FUTURE DEVELOPMENT. ANY REQUIRED REALIGNMENT, (HORIZONTAL OR VERTICAL), SHALL BE AT THE EXPENSE OF THE DEVELOPER. FIRE HYDRANT LOCATION SHALL BE REVIEWED AND APPROVED BY THE APPLICABLE FIRE AUTHORITY.

32. FIRE HYDRANTS SHALL BE OPEN RIGHT WITH 7/8□X 7/8□SQUARE TAPERED ALONG WITH SERVICE CAPS. LUBRICATION TYPE: (GREASE). ACCEPTABLE BRANDS ARE AMERICAN AVK SERIES 2700 (MODERN) AND MUELLER SUPER CENTURION 250.

33. ALL MAIN LINES (PVC & DUCTILE IRON) SHALL BE INSTALLED WITH COATED #12 TRACER WIRE WITH TEST STATIONS AT INTERVALS NO GREATER THAN 500 FT (VALVE BOXES CAN BE USED AT INTERSECTIONS AND SERVICE STUBS).

34. CONTRACTOR SHALL MAKE CONNECTIONS TO EXISTING WATER LINE WITHOUT SHUTDOWN, OR ELSE NOTIFY THE DISTRICT OF ANY SERVICE SHUTDOWNS NECESSARY TO CONNECT TO EXISTING LINES.

35. IRRIGATION SERVICES SHALL HAVE A STOP AND WASTE CURB STOP VALVE INSTALLED ALONG WITH TRACER WIRE EXTENDING BACK TO THE MAIN LINE.

36. COMMENCEMENT OF USE OF WATER LINES AND/OR SYSTEMS:

A) NO WATER FACILITY SHALL BE PLACED IN SERVICE UNTIL AFTER THE COMPLETION OF ALL PRESSURE TESTING, FLUSHING, BAC-T TESTING, COMPACTION TESTING, AND AS-BUILT DRAWINGS ARE SUBMITTED AND APPROVED BY THE DISTRICT.

B) NO WATER FACILITY SHALL BE PLACED IN SERVICE UNTIL ALL SERVICE LINES ARE COMPLETED AND THE FIRST LIFT OF ASPHALT IS COMPLETED OVER THE LINE. IN THE CASE WHERE NO ASPHALT IS TO BE PLACED OVER THE LINE, SURFACE IMPROVEMENTS SHALL BE COMPLETED PRIOR TO USE OF THE FACILITY.

C) ALL EASEMENTS (PLATTED OR DEEDED) ARE DEDICATED, EXECUTED BY THE DISTRICT, AND RECORDED.

WASTEWATER SYSTEM INSTALLATION NOTES

37. SANITARY SEWER LENGTHS ARE MH CENTER-MH CENTER. ALL SANITARY SEWER PIPES SHALL BE SDR 35 PVC OR EQUAL. SEWER LINES MAY NOT EXCEED 7% GRADE FOR ANY SIZE WITHOUT PRIOR APPROVAL OF THE DISTRICT. ALL NEWLY CONSTRUCTED RESIDENTIAL SANITARY SEWER TAPS SHALL USE PRE-MANUFACTURED IN-LINE PVC PUSH-ON WYES. TAPPING SADDLES MAY ONLY BE USED FOR TAPPING PRE-EXISTING MAINS.

38. ALL SANITARY SEWER MANHOLES SHALL BE WRAPPED WITH RU116 - RUBR-NEK JOINT WRAP OR EQUIVALENT AND COATED.

39. COMMENCEMENT OF USE OF SEWER LINES AND/OR SYSTEMS:

A) NO SANITARY SEWER FACILITY SHALL BE PLACED IN SERVICE UNTIL THE COMPLETION OF ALL JET CLEANING, PRESSURE TESTING, VACUUM TESTING, CCTV INSPECTION, COMPACTION TESTING, AND AS-BUILT DRAWINGS ARE SUBMITTED AND APPROVED BY THE DISTRICT.

B) NO SANITARY SEWER FACILITY SHALL BE PLACED IN SERVICE UNTIL ALL SERVICE LINES ARE COMPLETED AND THE FIRST LIFT OF ASPHALT IS COMPLETED OVER THE LINE. IN THE CASE WHERE NO ASPHALT IS TO BE PLACED OVER THE LINE, ANY REQUIRED SURFACE IMPROVEMENTS SHALL BE COMPLETED PRIOR TO USE OF THE FACILITY.

C) ALL NECESSARY EASEMENTS (PLATTED OR DEEDED) ARE DEDICATED, EXECUTED BY THE DISTRICT, AND RECORDED.

D) DOWNSTREAM PLUG CAN BE REMOVED ONCE FIRST LIFT OF ASPHALT IS DOWN AND THE ABOVE REQUIREMENTS ARE MET.

THE ABOVE GUIDELINES ARE SUBJECT TO CHANGE AT ANY TIME.

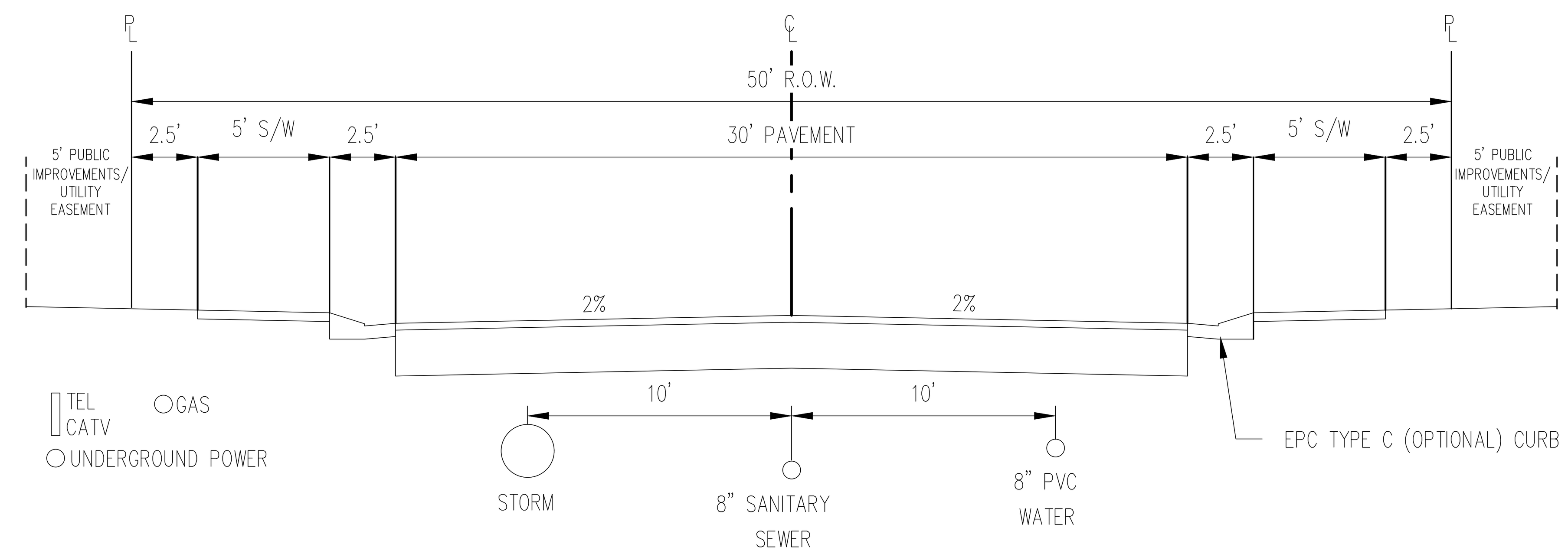

TYPICAL STREET SECTION – URBAN LOCAL ROADWAY
N.T.S.

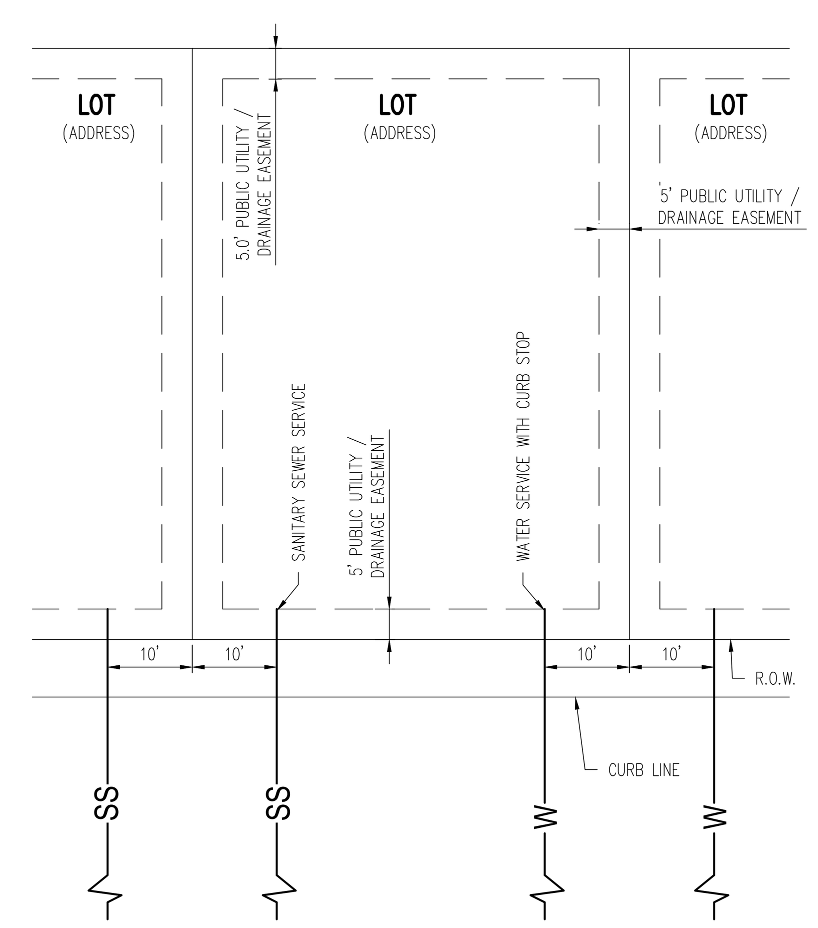

DETAIL: UTILITY SERVICE LOCATIONS
N.T.S.

UTILITY NOTES

1. CONTRACTOR TO OBTAIN WORK IN THE ROW PERMIT FROM EL PASO COUNTY PRIOR TO CONSTRUCTION.
2. CONTRACTOR TO POTHOLE AND VERIFY EXISTENCE OF OTHER UTILITIES WITHIN ANY PUBLIC RIGHT OF WAYS.
3. CONTRACTOR TO MAINTAIN 5.5' MINIMUM COVER OVER ALL WATER MAINS CONSTRUCTED.
4. ALL VALVES SHOWN FOR SCHEMATIC PURPOSES ONLY. NO VALVES SHALL BE INSTALLED IN CURB AND GUTTER OR CROSSPANS.
5. STANDARD WATER SERVICE LOCATIONS TO BE 10' FROM PROPERTY LINE AND EXTENDED TO THE 5' PUBLIC UTILITY EASEMENT.
6. STANDARD SANITARY SEWER SERVICE LOCATIONS TO BE 10' FROM PROPERTY LINE AND EXTENDED TO THE 5' PUBLIC UTILITY EASEMENT.
7. SERVICES SHALL BE MARKED WITH 2"X4" POST AT TERMINATION POINT FOR LOCATION DURING CONNECTION TO RESIDENCE. POSTS SHALL BE SPRAY-PAINTED BLUE FOR WATER AND GREEN FOR SEWER.
8. CURB STOPS ARE NOT TO BE INSTALLED IN CONCRETE CURB, CROSSPANS , SIDEWALKS, OR DRIVEWAYS.
9. SEE PLAN FOR CORNER LOT LOCATIONS.

Galloway
1155 Kelly Johnson Blvd., Suite 305
Colorado Springs, CO 80920
719.900.7220
GallowayUS.com

COLORADO LICENSED PROFESSIONAL ENGINEER
04/07/2021

COPYRIGHT
THESE PLANS ARE AN INSTRUMENT OF SERVICE AND ARE THE PROPERTY OF GALLOWAY, AND MAY NOT BE DUPLICATED, DISCLOSED, OR REPRODUCED WITHOUT THE WRITTEN CONSENT OF GALLOWAY. COPYRIGHTS AND INFRINGEMENTS WILL BE ENFORCED AND PROSECUTED.

CHALLENGER HOMES

WATER & WASTEWATER CONSTRUCTION PLANS
FALCON MEADOWS AT BENT GRASS FILING NO. 1
FOR
CHALLENGER COMMUNTIES, LLC

BENT GRASS MEADOWS DRIVE & MERDIAN ROAD
FALCON, CO 80831 - EL PASO COUNTY

#	Date	Issue / Description	Init.

Project No:	CLH000018
Drawn By:	CMWJ
Checked By:	RGD
Date:	03/26/2021

UTILITY NOTES AND
TYPICAL SECTION

U0.1

H:\Challenger Homes Inc\CO, El Paso County-CLH000018-Bent Grass Filing 3\CADD\3-CD\UTIL\CLH18_U0.0_Cover-Notes-Sections.dwg - Caleb Johnson - 3/26/2021

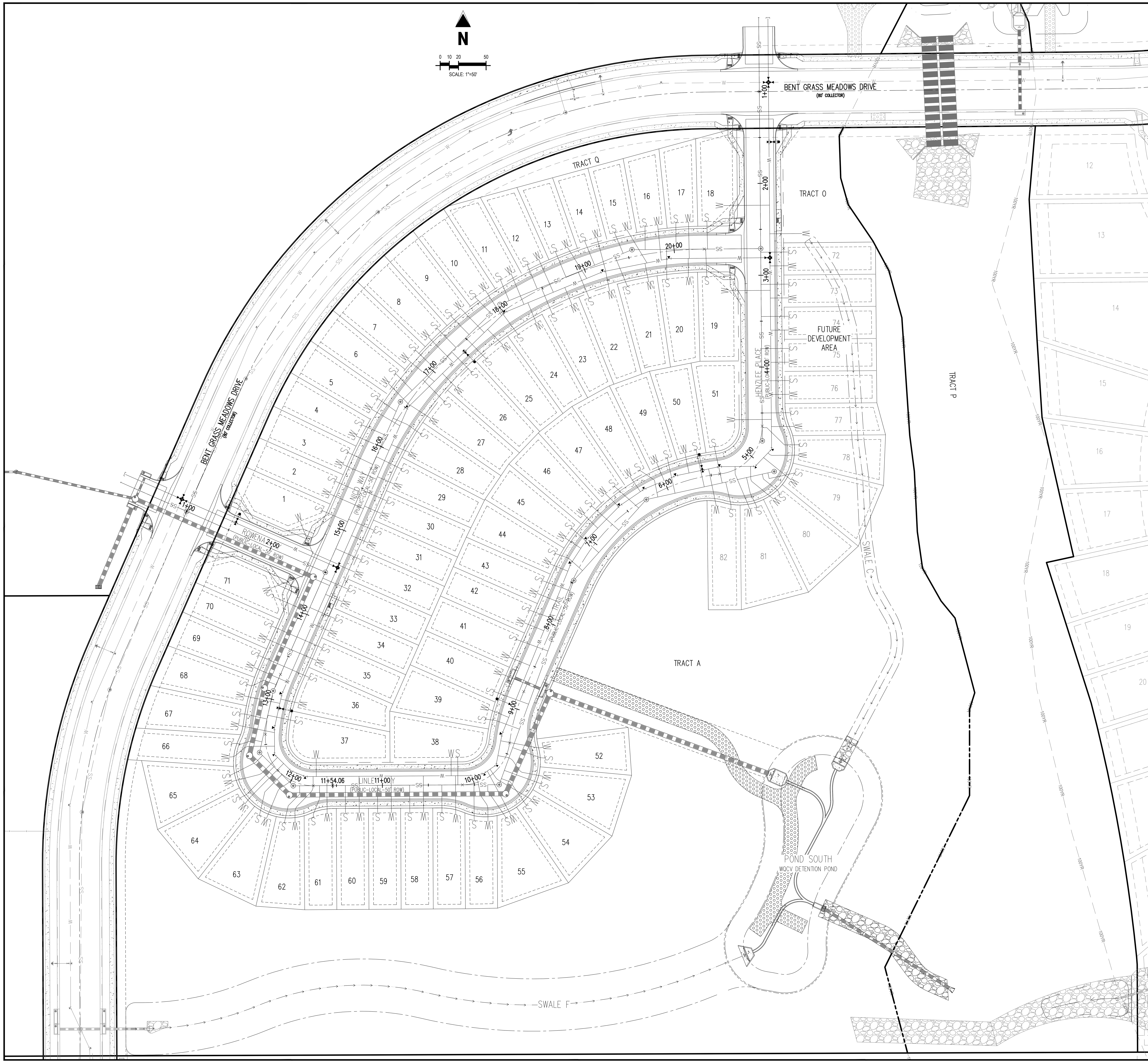

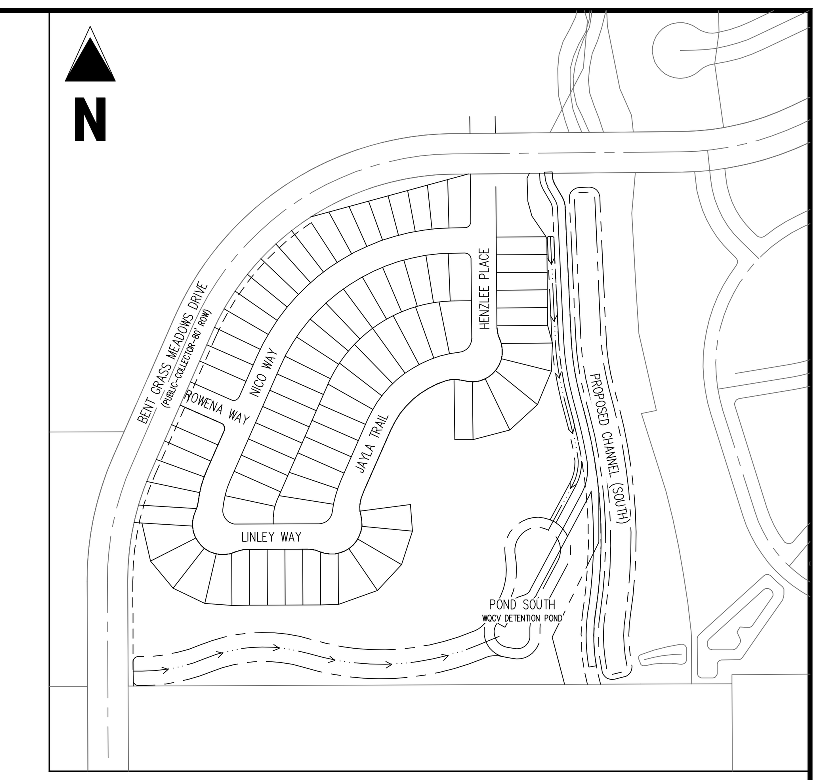

KEY MAP
SCALE: 1"=300'

LEGEND

- EXISTING PROPERTY LINE
- EXISTING PROPERTY LINE TO BE REMOVED
- PROPOSED PROPERTY LINE
- PROPOSED RIGHT OF WAY LINE
- EXISTING LOT LINE
- PROPOSED LOT LINE
- EXISTING EASEMENT
- PROPOSED EASEMENT
- EXISTING SUBDIVISION BUFFER
- EXISTING STORM DRAIN PIPE
- PROPOSED STORM DRAIN PIPE
- EXISTING WATER LINE
- PROPOSED WATER LINE
- EXISTING SANITARY SEWER LINE
- PROPOSED SANITARY SEWER LINE
- EXISTING DRAINAGE FEATURE OUTLINE
- PROPOSED DRAINAGE FEATURE OUTLINE
- EXISTING SWALE WITH FLOW DIRECTION
- PROPOSED SWALE WITH FLOW DIRECTION
- 100-YEAR FEMA FLOODPLAIN
- PROPOSED CDOT CLASS 6 GRAVEL
- PROPOSED RIP RAP
- EXISTING CONCRETE PAVING
- EXISTING CDOT CLASS 6 GRAVEL
- EXISTING 1" TO 2" CRUSHED ROCK
- EXISTING RIP RAP
- EXISTING GROUTED BOULDERS
- 113 PROPOSED LOT #
- 161 EXISTING LOT # (BENT GRASS FILING NO. 2)
- PROPOSED ADA RAMP
- PROPOSED FIRE HYDRANT
- PROPOSED GATE VALVE
- PROPOSED REDUCER
- PROPOSED WATER BEND/TEE
- PROPOSED SANITARY MANHOLE
- PROPOSED FES
- PROPOSED STORM MANHOLE
- PROPOSED CDOT TYPE R STORM INLET
- EXISTING FIRE HYDRANT
- EXISTING GATE VALVE
- EXISTING REDUCER
- EXISTING WATER BEND/TEE
- EXISTING SANITARY MANHOLE
- EXISTING FES
- EXISTING STORM MANHOLE
- EXISTING CDOT TYPE R STORM INLET

BASIS OF BEARINGS

ALL BEARINGS ARE GRID BEARINGS OF THE COLORADO STATE PLANE COORDINATE SYSTEM, CENTRAL ZONE, NORTH AMERICAN DATUM 1983. THE BEARING OF THE LINE BETWEEN THE SOUTHWEST CORNER OF SECTION 1, T13S, R65W AND THE WEST QUARTER CORNER SECTION 1, T13S, R65W IS N00°13'46"W AND MONUMENTED AS SHOWN:

BENCHMARK

THE SOUTHWESTERLY CORNER OF LOT 1 WOODMEN HILLS FILING NO. 4. MONUMENTED BY A YELLOW PLASTIC SURVEYORS CAP ON A NO. 4 REBAR LS# 24954 ELEVATION = 6947.67

CAUTION – NOTICE TO CONTRACTOR

1. ALL UTILITY LOCATIONS SHOWN ARE BASED ON MAPS PROVIDED BY THE APPROPRIATE UTILITY COMPANY AND FIELD SURFACE EVIDENCE AT THE TIME OF SURVEY AND IS TO BE CONSIDERED AN APPROXIMATE LOCATION ONLY. IT IS THE CONTRACTOR'S RESPONSIBILITY TO FIELD VERIFY THE FIELD LOCATION OF ALL UTILITIES, PUBLIC OR PRIVATE, WHETHER SHOWN ON THE PLANS OR NOT, PRIOR TO CONSTRUCTION. REPORT ANY DISCREPANCIES TO THE ENGINEEER PRIOR TO CONSTRUCTION.
2. WHERE A PROPOSED UTILITY CROSSES AN EXISTING UTILITY, IT IS THE CONTRACTOR'S RESPONSIBILITY TO FIELD VERIFY THE HORIZONTAL AND VERTICAL LOCATION OF SUCH EXISTING UTILITY, EITHER THROUGH POTHOLING OR ALTERNATIVE METHOD. REPORT INFORMATION TO THE ENGINEER PRIOR TO CONSTRUCTION.

811 Know what's **below.** **Call** before you dig.

Galloway
1155 Kelly Johnson Blvd., Suite 305
Colorado Springs, CO 80920
719.900.7220
GallowayUS.com

COLORADO LICENSED PROFESSIONAL ENGINEER
04/07/2021

COPYRIGHT
THESE PLANS ARE AN INSTRUMENT OF SERVICE AND ARE THE PROPERTY OF GALLOWAY, AND MAY NOT BE DUPLICATED, DISCLOSED, OR REPRODUCED WITHOUT THE WRITTEN CONSENT OF GALLOWAY. COPYRIGHTS AND INFRINGEMENTS WILL BE ENFORCED AND PROSECUTED.

CHALLENGER HOMES

WATER & WASTEWATER CONSTRUCTION PLANS
FALCON MEADOWS AT BENT GRASS FILING NO. 1
FOR
CHALLENGER COMMUNITIES, LLC

BENT GRASS MEADOWS DRIVE & MERDIAN ROAD
FALCON, CO 80831 - EL PASO COUNTY

#	Date	Issue / Description	Init.

Project No:	CLH000018
Drawn By:	CMWJ
Checked By:	RGD
Date:	03/26/2021

OVERALL UTILITY LAYOUT

U0.2

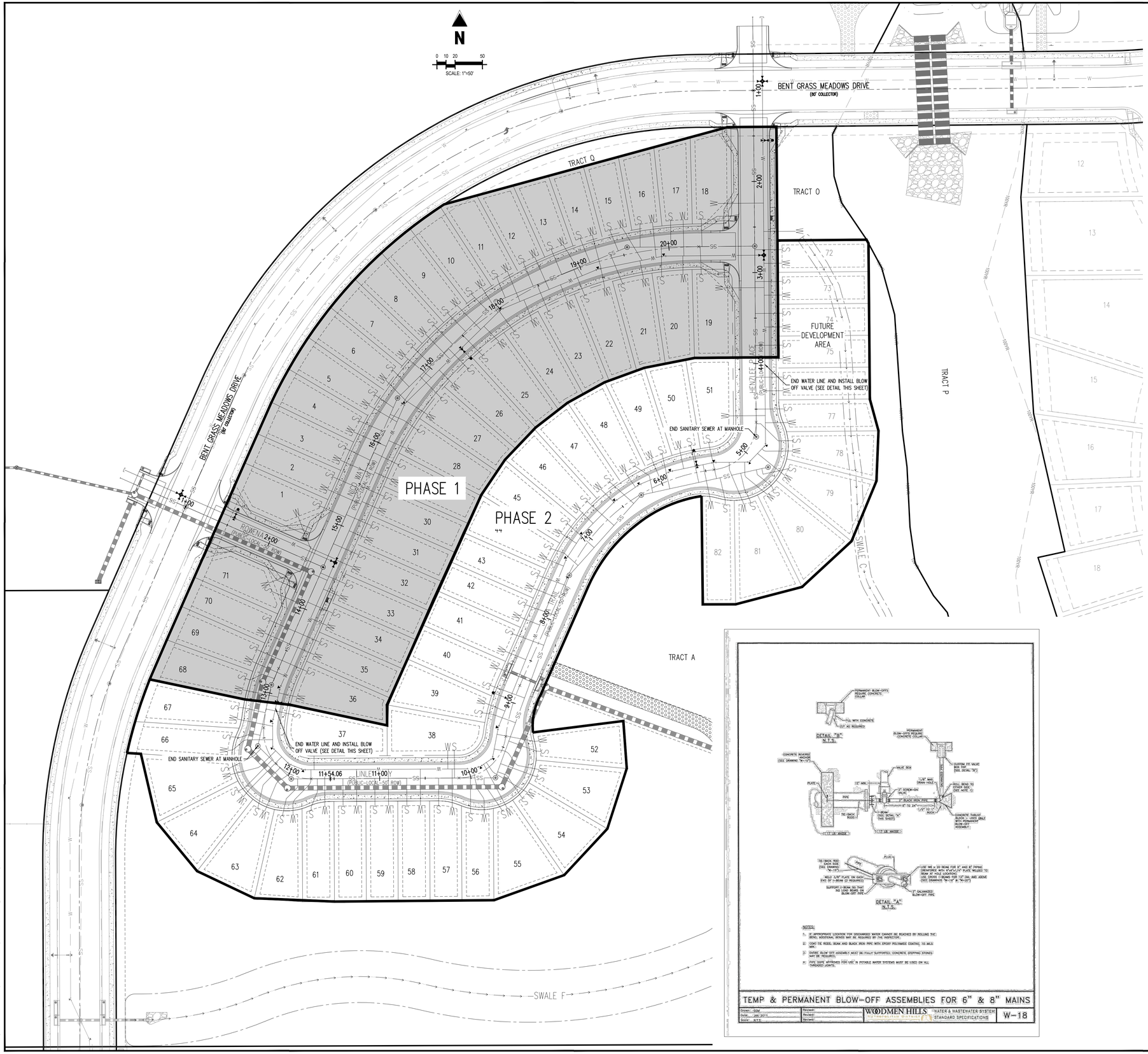

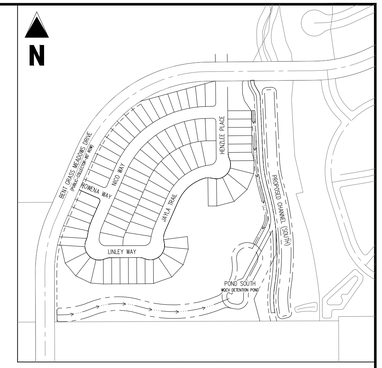

KEY MAP
SCALE: 1"=300'

LEGEND

- EXISTING PROPERTY LINE
- EXISTING PROPERTY LINE TO BE REMOVED
- PROPOSED PROPERTY LINE
- PROPOSED RIGHT OF WAY LINE
- EXISTING LOT LINE
- PROPOSED LOT LINE
- EXISTING EASEMENT
- PROPOSED EASEMENT
- EXISTING SUBDIVISION BUFFER
- EXISTING STORM DRAIN PIPE
- PROPOSED STORM DRAIN PIPE
- EXISTING WATER LINE
- PROPOSED WATER LINE
- EXISTING SANITARY SEWER LINE
- PROPOSED SANITARY SEWER LINE
- EXISTING DRAINAGE FEATURE OUTLINE
- PROPOSED DRAINAGE FEATURE OUTLINE
- EXISTING SWALE WITH FLOW DIRECTION
- PROPOSED SWALE WITH FLOW DIRECTION
- 100-YEAR FEMA FLOODPLAIN
- PROPOSED CDOT CLASS 6 GRAVEL
- PROPOSED RIP RAP
- EXISTING CONCRETE PAVING
- EXISTING CDOT CLASS 6 GRAVEL
- EXISTING 1" TO 2" CRUSHED ROCK
- EXISTING RIP RAP
- EXISTING GROUTED BOULDERS
- PROPOSED LOT #
- EXISTING LOT # (BENT GRASS FILING NO. 2)
- PROPOSED ADA RAMP
- PROPOSED FIRE HYDRANT
- PROPOSED GATE VALVE
- PROPOSED REDUCER
- PROPOSED WATER BEND/TEE
- PROPOSED SANITARY MANHOLE
- PROPOSED FES
- PROPOSED STORM MANHOLE
- PROPOSED CDOT TYPE R STORM INLET
- EXISTING FIRE HYDRANT
- EXISTING GATE VALVE
- EXISTING REDUCER
- EXISTING WATER BEND/TEE
- EXISTING SANITARY MANHOLE
- EXISTING FES
- EXISTING STORM MANHOLE
- EXISTING CDOT TYPE R STORM INLET

TEMP & PERMANENT BLOW-OFF ASSEMBLIES FOR 6" & 8" MAINS

Drawn: SDM | Revised:
Date: JAN 2011 | Revised:
Scale: N.T.S. | Revised:

WOODMEN HILLS METROPOLITAN DISTRICT | WATER & WASTEWATER SYSTEM STANDARD SPECIFICATIONS | W-18

BASIS OF BEARINGS

ALL BEARINGS ARE GRID BEARINGS OF THE COLORADO STATE PLANE COORDINATE SYSTEM, CENTRAL ZONE, NORTH AMERICAN DATUM 1983. THE BEARING OF THE LINE BETWEEN THE SOUTHWEST CORNER OF SECTION 1, T13S, R65W AND THE WEST QUARTER CORNER SECTION 1, T13S, R65W IS N00°13'46"W AND MONUMENTED AS SHOWN:

BENCHMARK

THE SOUTHWESTERLY CORNER OF LOT 1 WOODMEN HILLS FILING NO. 4. MONUMENTED BY A YELLOW PLASTIC SURVEYORS CAP ON A NO. 4 REBAR LS# 24954 ELEVATION = 6947.67

CAUTION – NOTICE TO CONTRACTOR

1. ALL UTILITY LOCATIONS SHOWN ARE BASED ON MAPS PROVIDED BY THE APPROPRIATE UTILITY COMPANY AND FIELD SURFACE EVIDENCE AT THE TIME OF SURVEY AND IS TO BE CONSIDERED AN APPROXIMATE LOCATION ONLY. IT IS THE CONTRACTOR'S RESPONSIBILITY TO FIELD VERIFY THE FIELD LOCATION OF ALL UTILITIES, PUBLIC OR PRIVATE, WHETHER SHOWN ON THE PLANS OR NOT, PRIOR TO CONSTRUCTION. REPORT ANY DISCREPANCIES TO THE ENGINEER PRIOR TO CONSTRUCTION.
2. WHERE A PROPOSED UTILITY CROSSES AN EXISTING UTILITY, IT IS THE CONTRACTOR'S RESPONSIBILITY TO FIELD VERIFY THE HORIZONTAL AND VERTICAL LOCATION OF SUCH EXISTING UTILITY, EITHER THROUGH POTHOLING OR ALTERNATIVE METHOD. REPORT INFORMATION TO THE ENGINEER PRIOR TO CONSTRUCTION.

811 Know what's **below.** **Call** before you dig.

Galloway
1155 Kelly Johnson Blvd., Suite 305
Colorado Springs, CO 80920
719.900.7220
GallowayUS.com

COLORADO LICENSED
CHRISTOPHER M. GRAY
PE.0054123
PROFESSIONAL ENGINEER
04/07/2021

COPYRIGHT
THESE PLANS ARE AN INSTRUMENT OF SERVICE AND ARE THE PROPERTY OF GALLOWAY, AND MAY NOT BE DUPLICATED, DISCLOSED, OR REPRODUCED WITHOUT THE WRITTEN CONSENT OF GALLOWAY. COPYRIGHTS AND INFRINGEMENTS WILL BE ENFORCED AND PROSECUTED.

CHALLENGER HOMES

WATER & WASTEWATER CONSTRUCTION PLANS
FALCON MEADOWS AT BENT GRASS FILING NO. 1
FOR
CHALLENGER COMMUNITIES, LLC

BENT GRASS MEADOWS DRIVE & MERIDIAN ROAD
FALCON, CO 80831 - EL PASO COUNTY

#	Date	Issue / Description	Init.

Project No:	CLH000018
Drawn By:	CMWJ
Checked By:	RGD
Date:	03/26/2021

PHASING PLAN (PHASE 1)

U0.3
Sheet 4 of 21

H:\Challenger Homes Inc\DOL Eff Plans Counties\CLH000018 Bent Grass Filing 1\CAD\DOL\CIVIL\CLH18_U03-Overall Sheet.dwg, Caleb Johnson, 3/26/2021

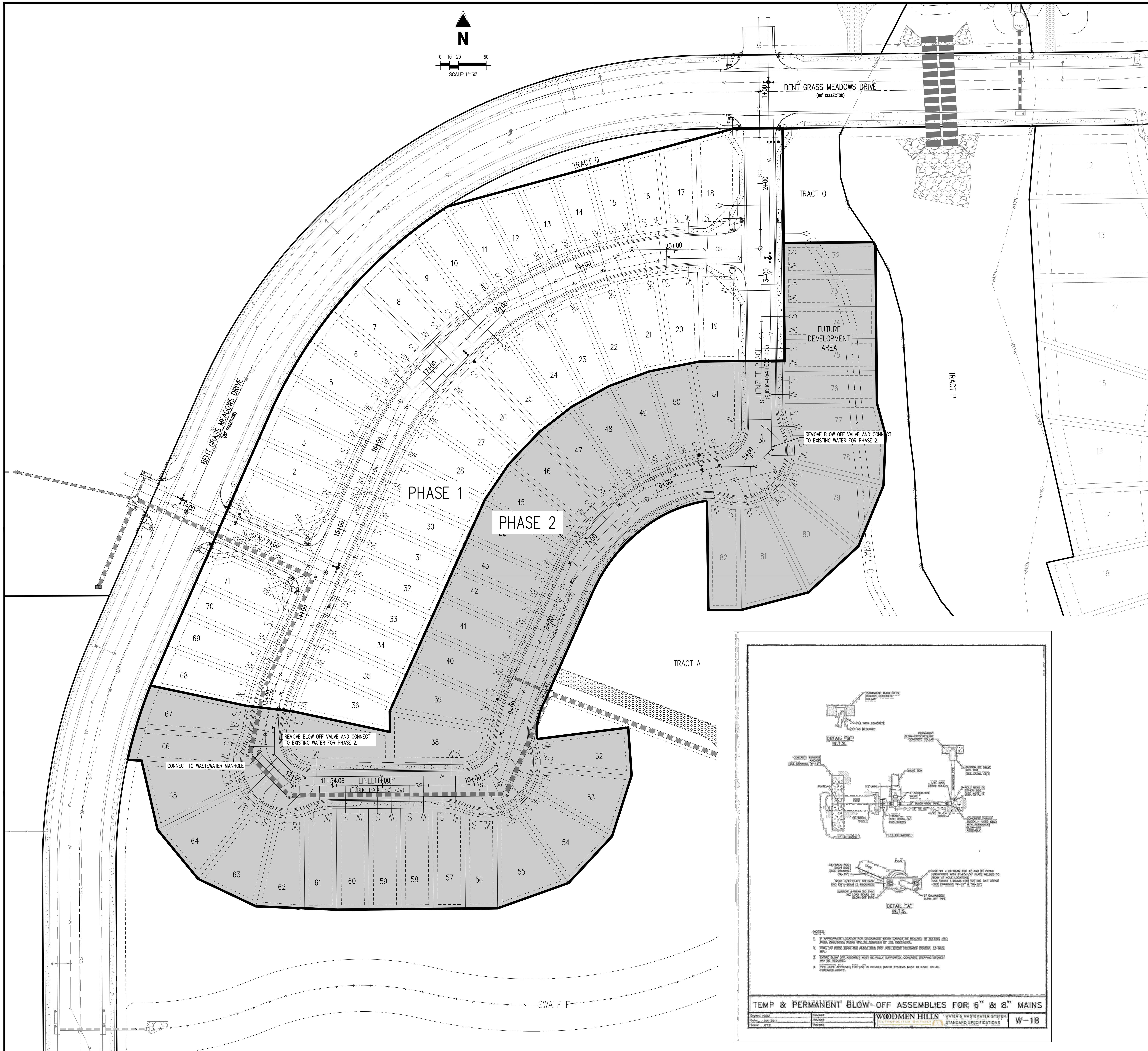

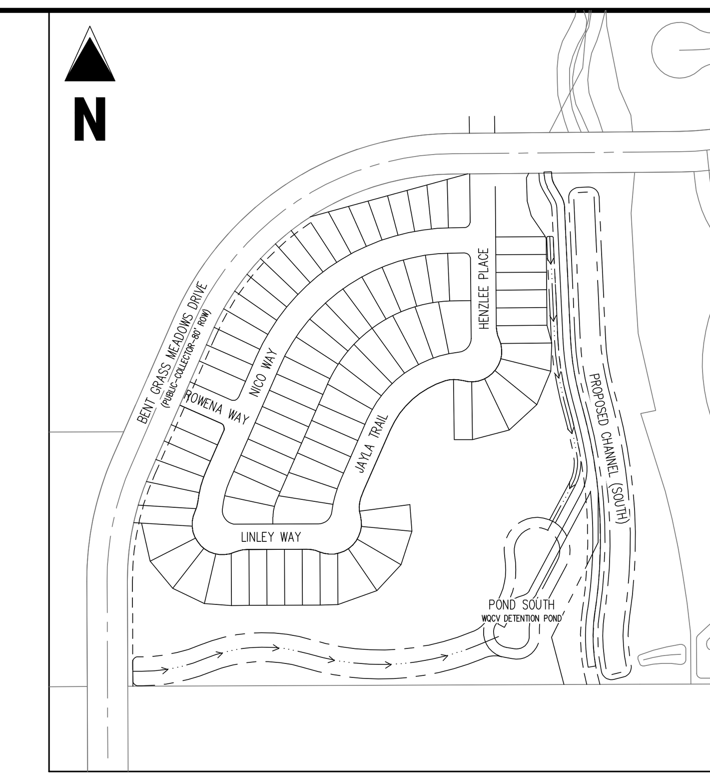

KEY MAP
SCALE: 1"=300'

LEGEND

- EXISTING PROPERTY LINE
- EXISTING PROPERTY LINE TO BE REMOVED
- PROPOSED PROPERTY LINE
- PROPOSED RIGHT OF WAY LINE
- EXISTING LOT LINE
- PROPOSED LOT LINE
- EXISTING EASEMENT
- PROPOSED EASEMENT
- EXISTING SUBDIVISION BUFFER
- EXISTING STORM DRAIN PIPE
- PROPOSED STORM DRAIN PIPE
- EXISTING WATER LINE
- PROPOSED WATER LINE
- EXISTING SANITARY SEWER LINE
- PROPOSED SANITARY SEWER LINE
- EXISTING DRAINAGE FEATURE OUTLINE
- PROPOSED DRAINAGE FEATURE OUTLINE
- EXISTING SWALE WITH FLOW DIRECTION
- PROPOSED SWALE WITH FLOW DIRECTION
- 100-YEAR FEMA FLOODPLAIN
- PROPOSED CDOT CLASS 6 GRAVEL
- PROPOSED RIP RAP
- EXISTING CONCRETE PAVING
- EXISTING CDOT CLASS 6 GRAVEL
- EXISTING 1" TO 2" CRUSHED ROCK
- EXISTING RIP RAP
- EXISTING GROUTED BOULDERS
- 113 PROPOSED LOT #
- 161 EXISTING LOT # (BENT GRASS FILING NO. 2)
- PROPOSED ADA RAMP
- PROPOSED FIRE HYDRANT
- PROPOSED GATE VALVE
- PROPOSED REDUCER
- PROPOSED WATER BEND/TEE
- PROPOSED SANITARY MANHOLE
- PROPOSED FES
- PROPOSED STORM MANHOLE
- PROPOSED CDOT TYPE R STORM INLET
- EXISTING FIRE HYDRANT
- EXISTING GATE VALVE
- EXISTING REDUCER
- EXISTING WATER BEND/TEE
- EXISTING SANITARY MANHOLE
- EXISTING FES
- EXISTING STORM MANHOLE
- EXISTING CDOT TYPE R STORM INLET

BASIS OF BEARINGS

ALL BEARINGS ARE GRID BEARINGS OF THE COLORADO STATE PLANE COORDINATE SYSTEM, CENTRAL ZONE, NORTH AMERICAN DATUM 1983. THE BEARING OF THE LINE BETWEEN THE SOUTHWEST CORNER OF SECTION 1, T13S, R65W AND THE WEST QUARTER CORNER SECTION 1, T13S, R65W IS N00°13'46"W AND MONUMENTED AS SHOWN:

BENCHMARK

THE SOUTHWESTERLY CORNER OF LOT 1 WOODMEN HILLS FILING NO. 4. MONUMENTED BY A YELLOW PLASTIC SURVEYORS CAP ON A NO. 4 REBAR LS# 24954 ELEVATION = 6947.67

CAUTION – NOTICE TO CONTRACTOR

1. ALL UTILITY LOCATIONS SHOWN ARE BASED ON MAPS PROVIDED BY THE APPROPRIATE UTILITY COMPANY AND FIELD SURFACE EVIDENCE AT THE TIME OF SURVEY AND IS TO BE CONSIDERED AN APPROXIMATE LOCATION ONLY. IT IS THE CONTRACTOR'S RESPONSIBILITY TO FIELD VERIFY THE FIELD LOCATION OF ALL UTILITIES, PUBLIC OR PRIVATE, WHETHER SHOWN ON THE PLANS OR NOT, PRIOR TO CONSTRUCTION. REPORT ANY DISCREPANCIES TO THE ENGINEEER PRIOR TO CONSTRUCTION.
2. WHERE A PROPOSED UTILITY CROSSES AN EXISTING UTILITY, IT IS THE CONTRACTOR'S RESPONSIBILITY TO FIELD VERIFY THE HORIZONTAL AND VERTICAL LOCATION OF SUCH EXISTING UTILITY, EITHER THROUGH POTHOLING OR ALTERNATIVE METHOD. REPORT INFORMATION TO THE ENGINEER PRIOR TO CONSTRUCTION.

811 Know what's below. Call before you dig.

Galloway
1155 Kelly Johnson Blvd., Suite 305
Colorado Springs, CO 80920
719.900.7220
GallowayUS.com

COLORADO LICENSED PROFESSIONAL ENGINEER
04/07/2021

COPYRIGHT
THESE PLANS ARE AN INSTRUMENT OF SERVICE AND ARE THE PROPERTY OF GALLOWAY, AND MAY NOT BE DUPLICATED, DISCLOSED, OR REPRODUCED WITHOUT THE WRITTEN CONSENT OF GALLOWAY. COPYRIGHTS AND INFRINGEMENTS WILL BE ENFORCED AND PROSECUTED.

CHALLENGER HOMES

WATER & WASTEWATER CONSTRUCTION PLANS FALCON MEADOWS AT BENT GRASS FILING NO. 1 FOR CHALLENGER COMMUNITIES, LLC

BENT GRASS MEADOWS DRIVE & MERDIAN ROAD
FALCON, CO 80831 - EL PASO COUNTY

#	Date	Issue / Description	Init.

Project No:	CLH000018
Drawn By:	CMWJ
Checked By:	RGD
Date:	03/26/2021

PHASING PLAN (PHASE 2)

U0.4

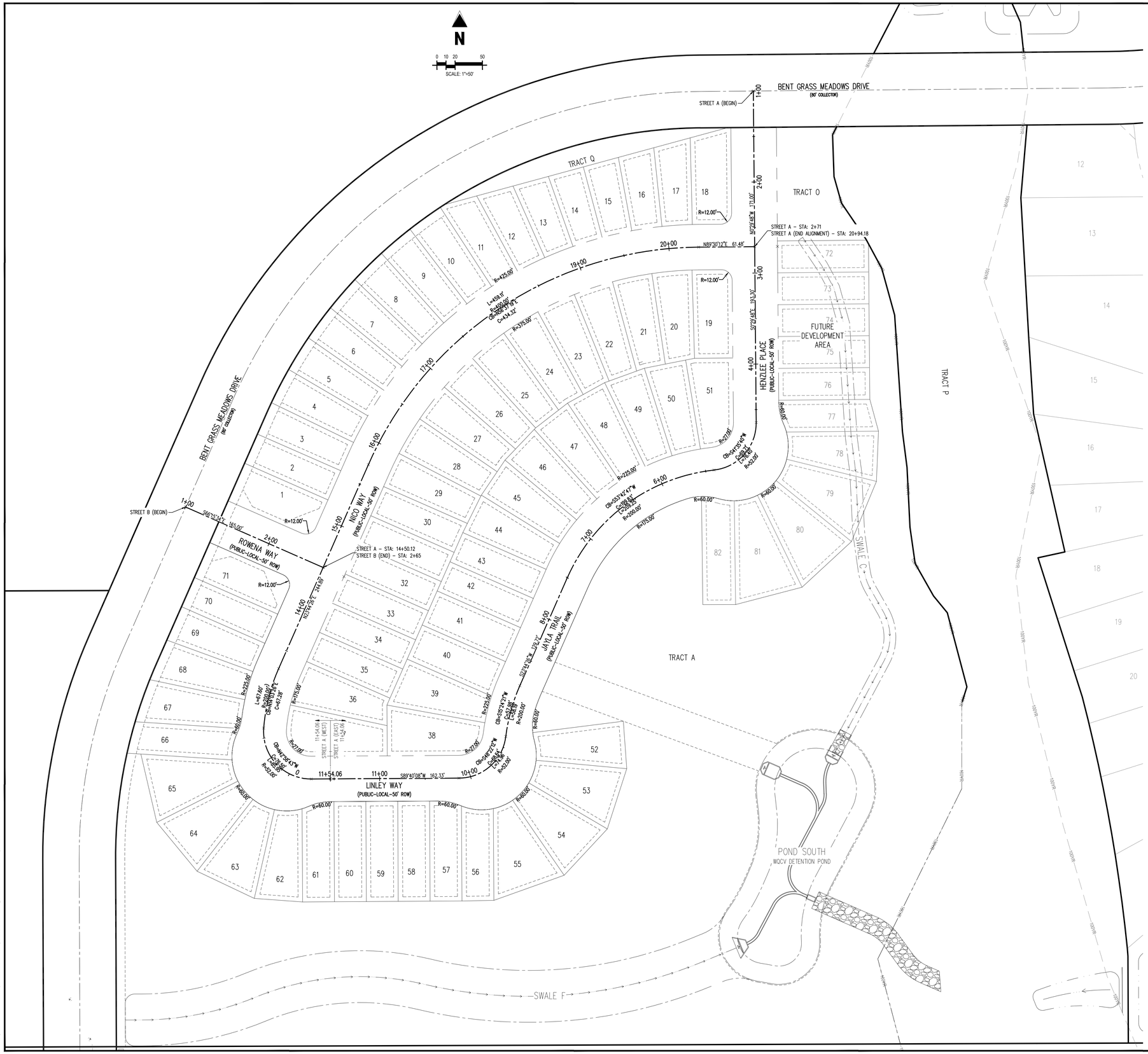

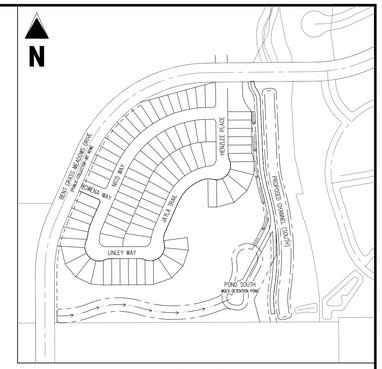

KEY MAP
SCALE: 1"=300'

LEGEND

- EXISTING PROPERTY LINE
- EXISTING PROPERTY LINE TO BE REMOVED
- PROPOSED RIGHT OF WAY LINE
- EXISTING LOT LINE
- PROPOSED LOT LINE
- EXISTING EASEMENT
- PROPOSED EASEMENT
- EXISTING SUBDIVISION BUFFER
- EXISTING DRAINAGE FEATURE OUTLINE
- PROPOSED DRAINAGE FEATURE OUTLINE
- EXISTING SWALE WITH FLOW DIRECTION
- PROPOSED SWALE WITH FLOW DIRECTION
- 100-YEAR FEMA FLOODPLAIN
- PROPOSED CDOT CLASS 6 GRAVEL
- PROPOSED RIP RAP
- 113 PROPOSED LOT #
- 161 EXISTING LOT # (BENT GRASS FILING NO. 2)
- PROPOSED ADA RAMP

BASIS OF BEARINGS

ALL BEARINGS ARE GRID BEARINGS OF THE COLORADO STATE PLANE COORDINATE SYSTEM, CENTRAL ZONE, NORTH AMERICAN DATUM 1983. THE BEARING OF THE LINE BETWEEN THE SOUTHWEST CORNER OF SECTION 1, T13S, R65W AND THE WEST QUARTER CORNER SECTION 1, T13S, R65W IS N00°13'46"W AND MONUMENTED AS SHOWN:

BENCHMARK

THE SOUTHWESTERLY CORNER OF LOT 1 WOODMEN HILLS FILING NO. 4, MONUMENTED BY A YELLOW PLASTIC SURVEYORS CAP ON A NO. 4 REBAR LS# 24954 ELEVATION = 6947.67

CAUTION – NOTICE TO CONTRACTOR

1. ALL UTILITY LOCATIONS SHOWN ARE BASED ON MAPS PROVIDED BY THE APPROPRIATE UTILITY COMPANY AND FIELD SURFACE EVIDENCE AT THE TIME OF SURVEY AND IS TO BE CONSIDERED AN APPROXIMATE LOCATION ONLY. IT IS THE CONTRACTOR'S RESPONSIBILITY TO FIELD VERIFY THE FIELD LOCATION OF ALL UTILITIES, PUBLIC OR PRIVATE, WHETHER SHOWN ON THE PLANS OR NOT, PRIOR TO CONSTRUCTION. REPORT ANY DISCREPANCIES TO THE ENGINEER PRIOR TO CONSTRUCTION.
2. WHERE A PROPOSED UTILITY CROSSES AN EXISTING UTILITY, IT IS THE CONTRACTOR'S RESPONSIBILITY TO FIELD VERIFY THE HORIZONTAL AND VERTICAL LOCATION OF SUCH EXISTING UTILITY, EITHER THROUGH POTHOLING OR ALTERNATIVE METHOD. REPORT INFORMATION TO THE ENGINEER PRIOR TO CONSTRUCTION.

811 Know what's **below.** **Call** before you dig.

Galloway
1155 Kelly Johnson Blvd., Suite 305
Colorado Springs, CO 80920
719.900.7220
GallowayUS.com

COLORADO LICENSED
TROY GRAY 38
PE
PROFESSIONAL ENGINEER
04/07/2021

COPYRIGHT
THESE PLANS ARE AN INSTRUMENT OF SERVICE AND ARE THE PROPERTY OF GALLOWAY, AND MAY NOT BE DUPLICATED, DISCLOSED, OR REPRODUCED WITHOUT THE WRITTEN CONSENT OF GALLOWAY. COPYRIGHTS AND INFRINGEMENTS WILL BE ENFORCED AND PROSECUTED.

CHALLENGER HOMES

WATER & WASTEWATER CONSTRUCTION PLANS
FALCON MEADOWS AT BENT GRASS FILING NO. 1
FOR
CHALLENGER COMMUNITIES, LLC

BENT GRASS MEADOWS DRIVE & MERDIAN ROAD
FALCON, CO 80831 - EL PASO COUNTY

#	Date	Issue / Description	Init.

Project No:	CLH000018
Drawn By:	CMWJ
Checked By:	RGD
Date:	03/26/2021

HORIZONTAL CONTROL PLAN

U0.5
Sheet 6 of 21

M:\Challenger Homes Inc\03- El Paso County\CLH000018 Bent Grass Filing 3\CAD\COVER\CLH18_U0.5 Overall Horizontal Control.dwg - Caleb Johnson - 3/26/2021

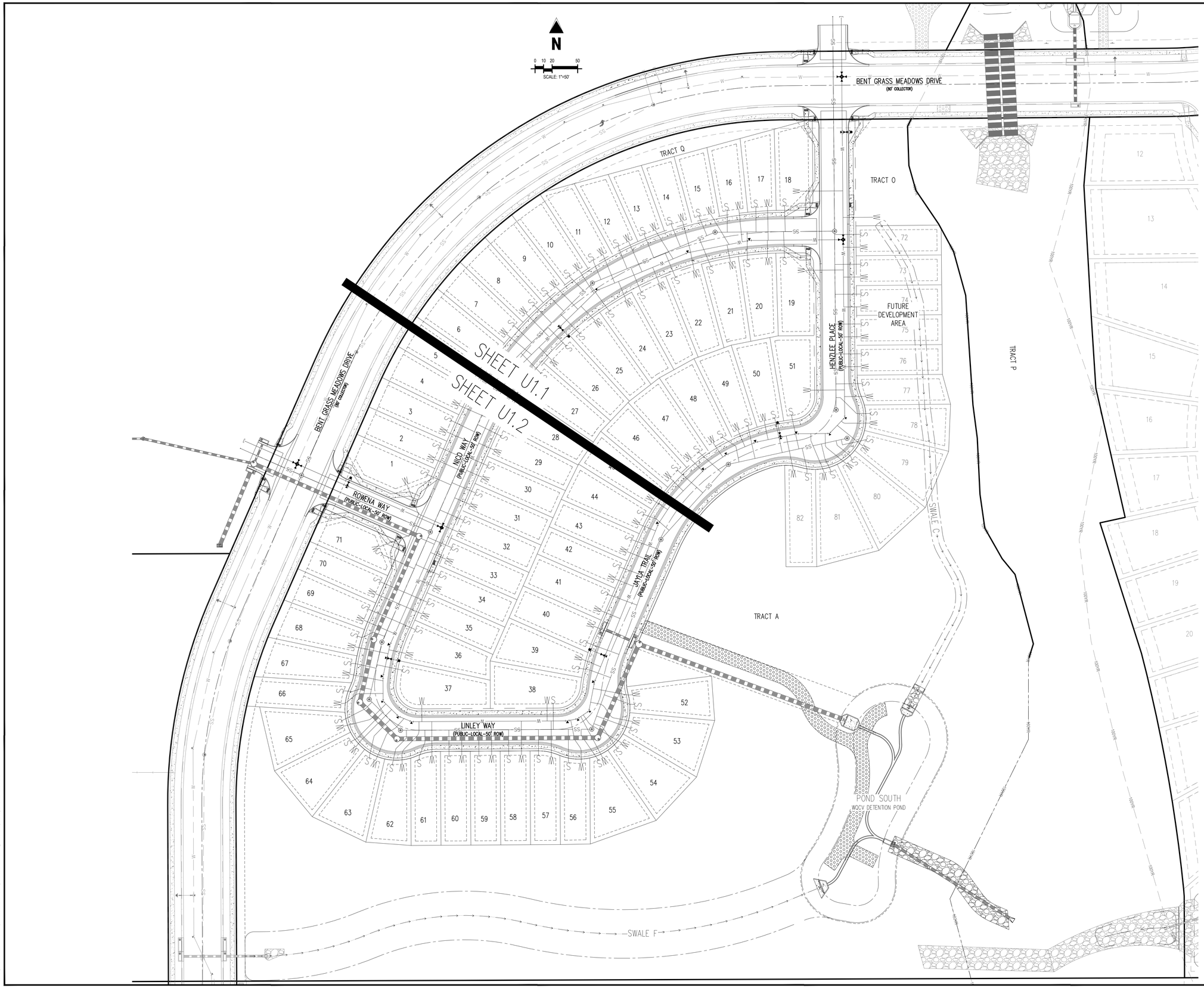

Galloway

1155 Kelly Johnson Blvd., Suite 305
Colorado Springs, CO 80920
719.900.7220
GallowayUS.com

COLORADO LICENSED PROFESSIONAL ENGINEER
04/07/2021

COPYRIGHT
THESE PLANS ARE AN INSTRUMENT OF SERVICE AND ARE THE PROPERTY OF GALLOWAY, AND MAY NOT BE DUPLICATED, DISCLOSED, OR REPRODUCED WITHOUT THE WRITTEN CONSENT OF GALLOWAY. COPYRIGHTS AND INFRINGEMENTS WILL BE ENFORCED AND PROSECUTED.

CHALLENGER HOMES

WATER & WASTEWATER CONSTRUCTION PLANS
FALCON MEADOWS AT BENT GRASS FILING NO. 1
FOR
CHALLENGER COMMUNTIES, LLC

BENT GRASS MEADOWS DRIVE & MERDIAN ROAD
FALCON, CO 80831 - EL PASO COUNTY

#	Date	Issue / Description	Init.

Project No:	CLH000018
Drawn By:	CMWJ
Checked By:	RGD
Date:	03/26/2021

WATER PLAN KEY MAP

U1.0

Sheet 7 of 21

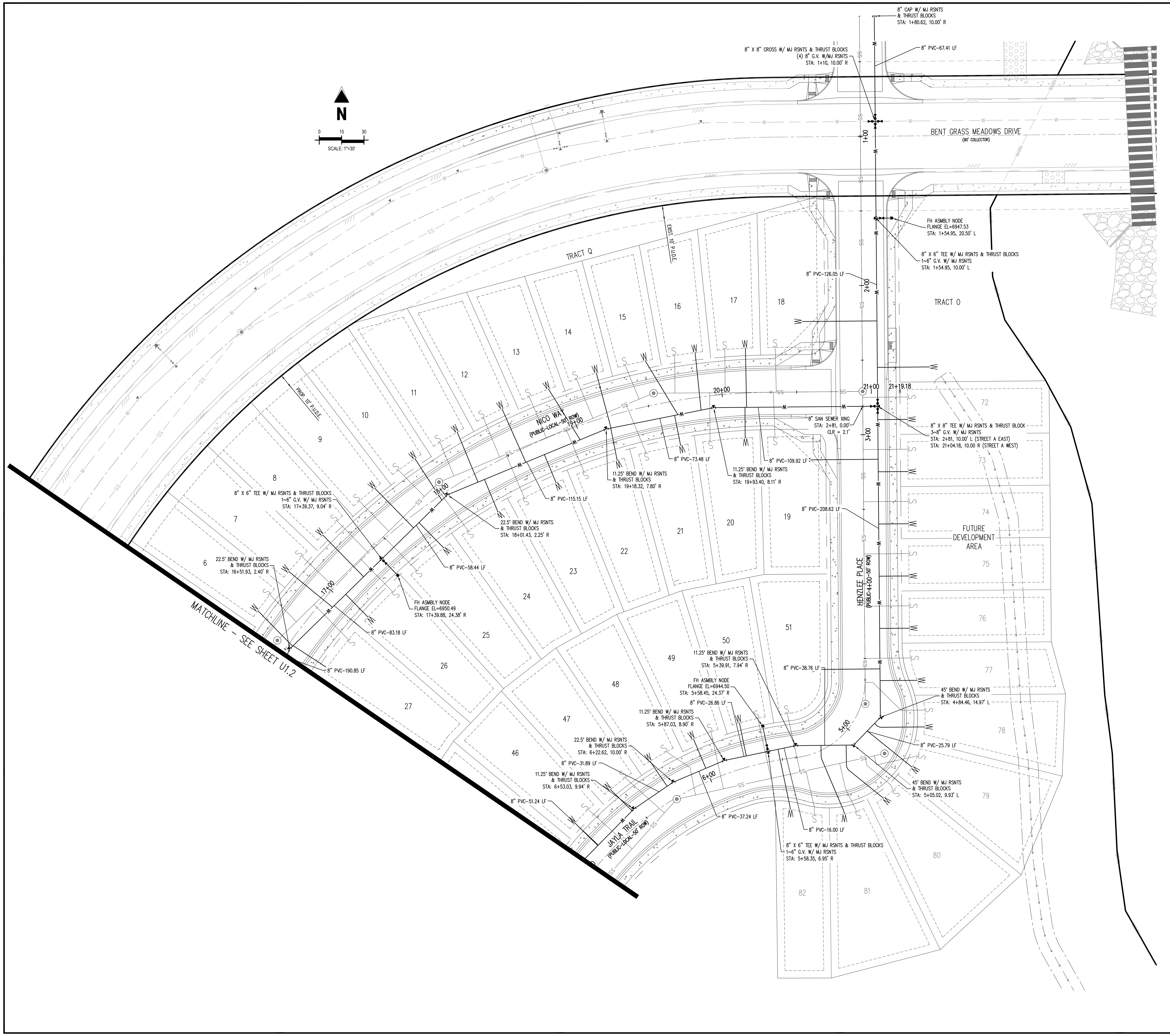

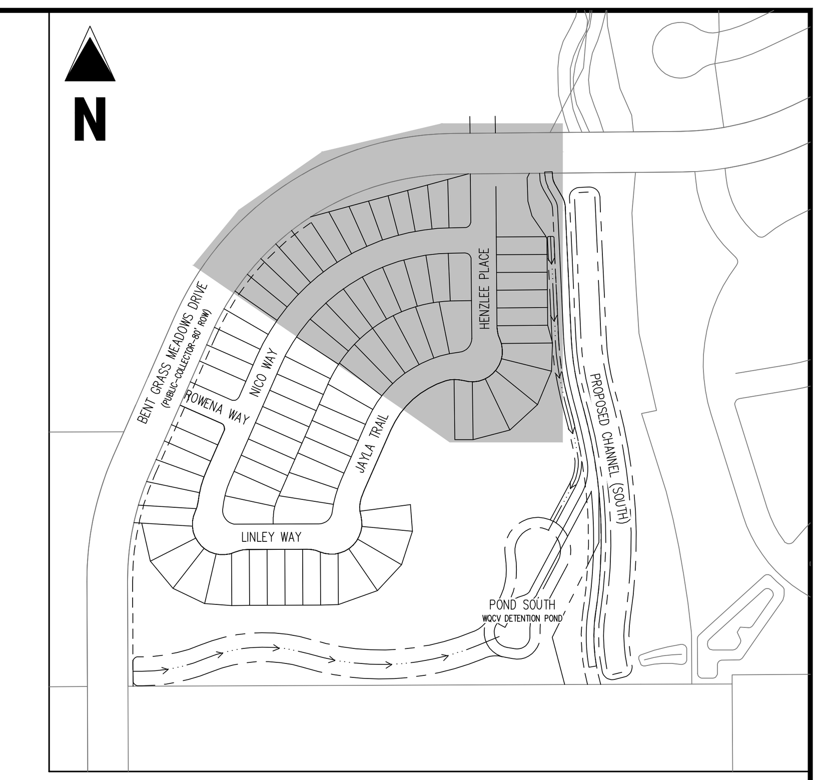

KEY MAP
SCALE: 1"=300'

LEGEND

- EXISTING PROPERTY LINE
- EXISTING PROPERTY LINE TO BE REMOVED
- PROPOSED RIGHT OF WAY LINE
- EXISTING LOT LINE
- PROPOSED LOT LINE
- EXISTING EASEMENT
- PROPOSED EASEMENT
- EXISTING SUBDIVISION BUFFER
- EXISTING STORM DRAIN PIPE
- PROPOSED STORM DRAIN PIPE
- EXISTING WATER LINE
- PROPOSED WATER LINE
- EXISTING SANITARY SEWER LINE
- PROPOSED SANITARY SEWER LINE
- EXISTING DRAINAGE FEATURE OUTLINE
- PROPOSED DRAINAGE FEATURE OUTLINE
- EXISTING SWALE WITH FLOW DIRECTION
- PROPOSED SWALE WITH FLOW DIRECTION
- 100-YEAR FEMA FLOODPLAIN
- PROPOSED CDOT CLASS 6 GRAVEL
- PROPOSED RIP RAP
- EXISTING CONCRETE PAVING
- EXISTING CDOT CLASS 6 GRAVEL
- EXISTING 1" TO 2" CRUSHED ROCK
- EXISTING RIP RAP
- EXISTING GROUTED BOULDERS
- 113 PROPOSED LOT #
- 161 EXISTING LOT # (BENT GRASS FILING NO. 2)
- PROPOSED ADA RAMP
- PROPOSED FIRE HYDRANT
- PROPOSED GATE VALVE
- PROPOSED REDUCER
- PROPOSED WATER BEND/TEE
- PROPOSED SANITARY MANHOLE
- PROPOSED FES
- PROPOSED STORM MANHOLE
- PROPOSED CDOT TYPE R STORM INLET

NOTES

1. ALL WATER MAINS SHALL BE NO CLOSER THAN FIVE FEET (5') TO EDGE OF CONCRETE CUR AND/OR GUTTER.
2. WATER MAINS SHALL BE DESIGNED FOR A MINIMUM OF FIVE FEET SIX INCHES (5'-6") AND A MAXIMUM OF SIX FEET SIX INCHES (6'-6") OF COVER, EXCEPT WHERE ANOTHER UTILITY CAUSES A CONFLICT, IN WHICH CASE THE WATER MAIN SHALL BE LOWERED AS NECESSARY.
3. A VALVE SHALL ALWAYS BE PROVIDED WHERE A MAIN WILL BE EXTENDED IN THE FUTURE TO FACILITATE CONNECTING TO THE EXISTING MAIN WITHOUT DISRUPTING SERVICE. THERE SHALL BE A TWENTY FOOT (20') STUB PAST THE VALVE TO FACILITATE EASE OF CONNECTION.
4. CONTRACTOR TO READ AND BECOME FAMILIAR WITH THE WOODMEN HILLS METROPOLITAN DISTRICT WATER AND WASTEWATER SYSTEM STANDARD SPECIFICATIONS CRITERIA MANUAL AND DETAILS PRIOR TO BEGINNING CONSTRUCTION.

BASIS OF BEARINGS

ALL BEARINGS ARE GRID BEARINGS OF THE COLORADO STATE PLANE COORDINATE SYSTEM, CENTRAL ZONE, NORTH AMERICAN DATUM 1983. THE BEARING OF THE LINE BETWEEN THE SOUTHWEST CORNER OF SECTION 1, T13S, R65W AND THE WEST QUARTER CORNER SECTION 1, T13S, R65W IS N00°13'46"W AND MONUMENTED AS SHOWN:

BENCHMARK

THE SOUTHWESTERLY CORNER OF LOT 1 WOODMEN HILLS FILING NO. 4. MONUMENTED BY A YELLOW PLASTIC SURVEYORS CAP ON A NO. 4 REBAR LS# 24954 ELEVATION = 6947.67

CAUTION - NOTICE TO CONTRACTOR

1. ALL UTILITY LOCATIONS SHOWN ARE BASED ON MAPS PROVIDED BY THE APPROPRIATE UTILITY COMPANY AND FIELD SURFACE EVIDENCE AT THE TIME OF SURVEY AND IS TO BE CONSIDERED AN APPROXIMATE LOCATION ONLY. IT IS THE CONTRACTOR'S RESPONSIBILITY TO FIELD VERIFY THE FIELD LOCATION OF ALL UTILITIES, PUBLIC OR PRIVATE, WHETHER SHOWN ON THE PLANS OR NOT, PRIOR TO CONSTRUCTION. REPORT ANY DISCREPANCIES TO THE ENGINEEER PRIOR TO CONSTRUCTION.
2. WHERE A PROPOSED UTILITY CROSSES AN EXISTING UTILITY, IT IS THE CONTRACTOR'S RESPONSIBILITY TO FIELD VERIFY THE HORIZONTAL AND VERTICAL LOCATION OF SUCH EXISTING UTILITY, EITHER THROUGH POTHOLING OR ALTERNATIVE METHOD. REPORT INFORMATION TO THE ENGINEER PRIOR TO CONSTRUCTION.

811 Know what's **below.** **Call** before you dig.

Galloway
1155 Kelly Johnson Blvd., Suite 305
Colorado Springs, CO 80920
719.900.7220
GallowayUS.com

COLORADO LICENSED PROFESSIONAL ENGINEER
04/07/2021

COPYRIGHT
THESE PLANS ARE AN INSTRUMENT OF SERVICE AND ARE THE PROPERTY OF GALLOWAY, AND MAY NOT BE DUPLICATED, DISCLOSED, OR REPRODUCED WITHOUT THE WRITTEN CONSENT OF GALLOWAY. COPYRIGHTS AND INFRINGEMENTS WILL BE ENFORCED AND PROSECUTED.

CHALLENGER HOMES

WATER & WASTEWATER CONSTRUCTION PLANS FALCON MEADOWS AT BENT GRASS FILING NO. 1 FOR CHALLENGER COMMUNITIES, LLC

BENT GRASS MEADOWS DRIVE & MERDIAN ROAD
FALCON, CO 80831 - EL PASO COUNTY

#	Date	Issue / Description	Init.

Project No:	CLH000018
Drawn By:	CMWJ
Checked By:	RGD
Date:	03/26/2021

WATER PLAN

U1.1

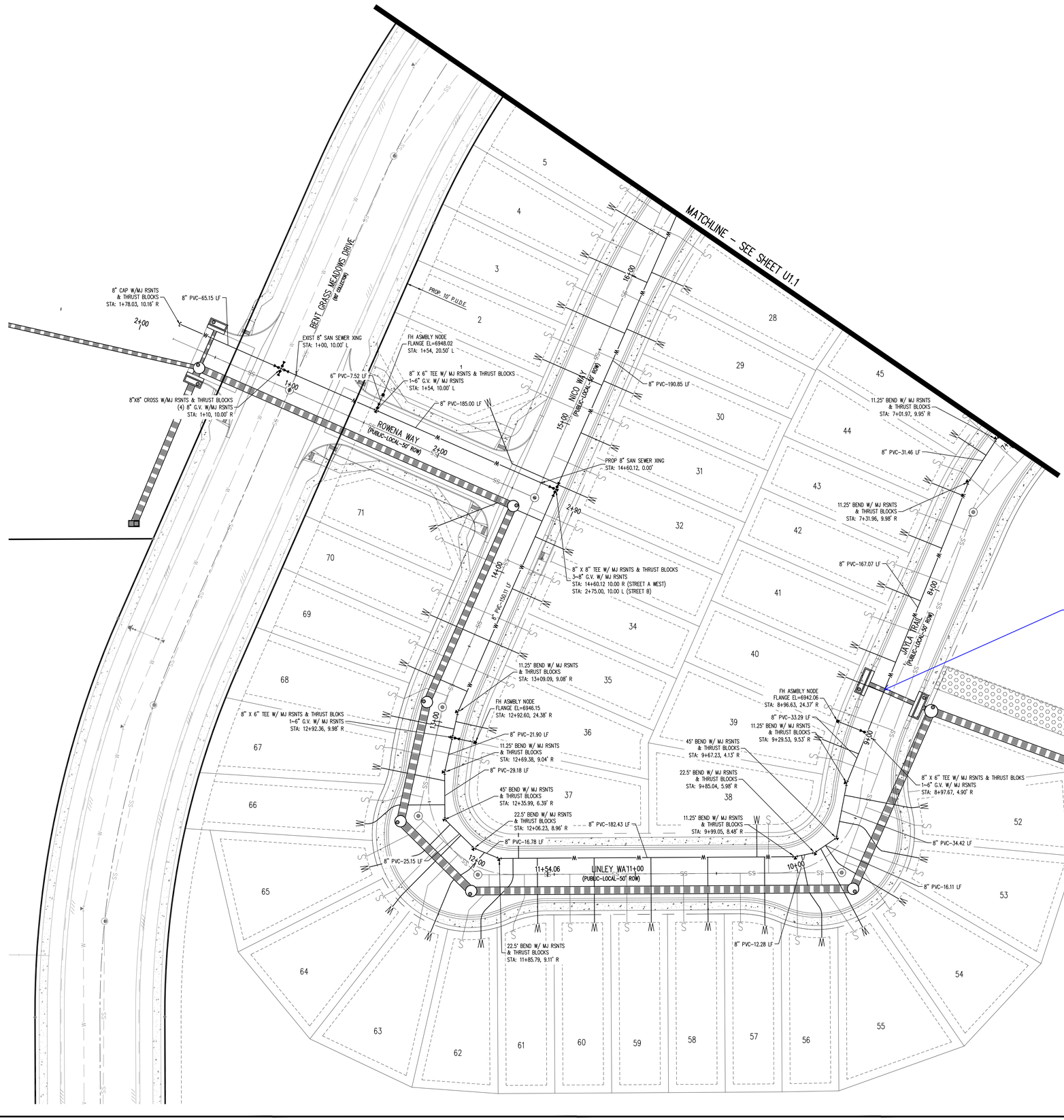

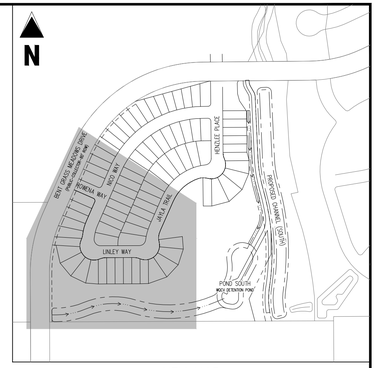

KEY MAP
SCALE: 1"=300'

N
0 15 30
SCALE: 1"=30'

LEGEND

- EXISTING PROPERTY LINE
- EXISTING PROPERTY LINE TO BE REMOVED
- PROPOSED RIGHT OF WAY LINE
- EXISTING LOT LINE
- PROPOSED LOT LINE
- EXISTING EASEMENT
- PROPOSED EASEMENT
- EXISTING SUBDIVISION BUFFER
- EXISTING STORM DRAIN PIPE
- PROPOSED STORM DRAIN PIPE
- EXISTING WATER LINE
- PROPOSED WATER LINE
- EXISTING SANITARY SEWER LINE
- PROPOSED SANITARY SEWER LINE
- EXISTING DRAINAGE FEATURE OUTLINE
- PROPOSED DRAINAGE FEATURE OUTLINE
- EXISTING SWALE WITH FLOW DIRECTION
- PROPOSED SWALE WITH FLOW DIRECTION
- 100-YEAR FEMA FLOODPLAIN
- PROPOSED CDOT CLASS 6 GRAVEL
- PROPOSED RIP RAP
- EXISTING CONCRETE PAVING
- EXISTING CDOT CLASS 6 GRAVEL
- EXISTING 1" TO 2" CRUSHED ROCK
- EXISTING RIP RAP
- EXISTING GROUTED BOULDERS
- 113 PROPOSED LOT #
- 161 EXISTING LOT # (BENT GRASS FILING NO. 2)
- PROPOSED ADA RAMP
- PROPOSED FIRE HYDRANT
- PROPOSED GATE VALVE
- PROPOSED REDUCER
- PROPOSED WATER BEND/TEE
- PROPOSED SANITARY MANHOLE
- PROPOSED FES
- PROPOSED STORM MANHOLE
- PROPOSED CDOT TYPE R STORM INLET

NOTES

1. ALL WATER MAINS SHALL BE NO CLOSER THAN FIVE FEET (5') TO EDGE OF CONCRETE CUR AND/OR GUTTER.
2. WATER MAINS SHALL BE DESIGNED FOR A MINIMUM OF FIVE FEET SIX INCHES (5'-6") AND A MAXIMUM OF SIX FEET SIX INCHES (6'-6") OF COVER, EXCEPT WHERE ANOTHER UTILITY CAUSES A CONFLICT, IN WHICH CASE THE WATER MAIN SHALL BE LOWERED AS NECESSARY.
3. A VALVE SHALL ALWAYS BE PROVIDED WHERE A MAIN WILL BE EXTENDED IN THE FUTURE TO FACILITATE CONNECTING TO THE EXISTING MAIN WITHOUT DISRUPTING SERVICE. THERE SHALL BE A TWENTY FOOT (20') STUB PAST THE VALVE TO FACILITATE EASE OF CONNECTION.
4. CONTRACTOR TO READ AND BECOME FAMILIAR WITH THE WOODMEN HILLS METROPOLITAN DISTRICT WATER AND WASTEWATER SYSTEM STANDARD SPECIFICATIONS CRITERIA MANUAL AND DETAILS PRIOR TO BEGINNING CONSTRUCTION.

BASIS OF BEARINGS

ALL BEARINGS ARE GRID BEARINGS OF THE COLORADO STATE PLANE COORDINATE SYSTEM, CENTRAL ZONE, NORTH AMERICAN DATUM 1983. THE BEARING OF THE LINE BETWEEN THE SOUTHWEST CORNER OF SECTION 1, T13S, R65W AND THE WEST QUARTER CORNER SECTION 1, T13S, R65W IS N00°13'46"W AND MONUMENTED AS SHOWN:

BENCHMARK

THE SOUTHWESTERLY CORNER OF LOT 1 WOODMEN HILLS FILING NO. 4. MONUMENTED BY A YELLOW PLASTIC SURVEYORS CAP ON A NO. 4 REBAR LS# 24954 ELEVATION = 6947.67

CAUTION – NOTICE TO CONTRACTOR

1. ALL UTILITY LOCATIONS SHOWN ARE BASED ON MAPS PROVIDED BY THE APPROPRIATE UTILITY COMPANY AND FIELD SURFACE EVIDENCE AT THE TIME OF SURVEY AND IS TO BE CONSIDERED AN APPROXIMATE LOCATION ONLY. IT IS THE CONTRACTOR'S RESPONSIBILITY TO FIELD VERIFY THE FIELD LOCATION OF ALL UTILITIES, PUBLIC OR PRIVATE, WHETHER SHOWN ON THE PLANS OR NOT, PRIOR TO CONSTRUCTION. REPORT ANY DISCREPANCIES TO THE ENGINEER PRIOR TO CONSTRUCTION.
2. WHERE A PROPOSED UTILITY CROSSES AN EXISTING UTILITY, IT IS THE CONTRACTOR'S RESPONSIBILITY TO FIELD VERIFY THE HORIZONTAL AND VERTICAL LOCATION OF SUCH EXISTING UTILITY, EITHER THROUGH POTHOLING OR ALTERNATIVE METHOD. REPORT INFORMATION TO THE ENGINEER PRIOR TO CONSTRUCTION.

811 Know what's **below.** **Call** before you dig.

Galloway
1155 Kelly Johnson Blvd., Suite 305
Colorado Springs, CO 80920
719.900.7220
GallowayUS.com

COLORADO LICENSED THOMAS R. GRAY 39122 PROFESSIONAL ENGINEER
04/07/2021

COPYRIGHT
THESE PLANS ARE AN INSTRUMENT OF SERVICE AND ARE THE PROPERTY OF GALLOWAY, AND MAY NOT BE DUPLICATED, DISCLOSED, OR REPRODUCED WITHOUT THE WRITTEN CONSENT OF GALLOWAY. COPYRIGHTS AND INFRINGEMENTS WILL BE ENFORCED AND PROSECUTED.

CHALLENGER HOMES

WATER & WASTEWATER CONSTRUCTION PLANS FALCON MEADOWS AT BENT GRASS FILING NO. 1 FOR CHALLENGER COMMUNITIES, LLC

BENT GRASS MEADOWS DRIVE & MERIDIAN ROAD
FALCON, CO 80831 - EL PASO COUNTY

#	Date	Issue / Description	Init.

Project No:	CLH000018
Drawn By:	CMWJ
Checked By:	RGD
Date:	03/26/2021

WATER PLAN

U1.2
Sheet 9 of 21

H:\Challenger Homes Inc\03. El Paso County\CLH000018 Bent Grass Filing 3\CAD\03-CIVIL\U1.2 Water Plan.dwg - Caleb Johnson - 3/26/2021

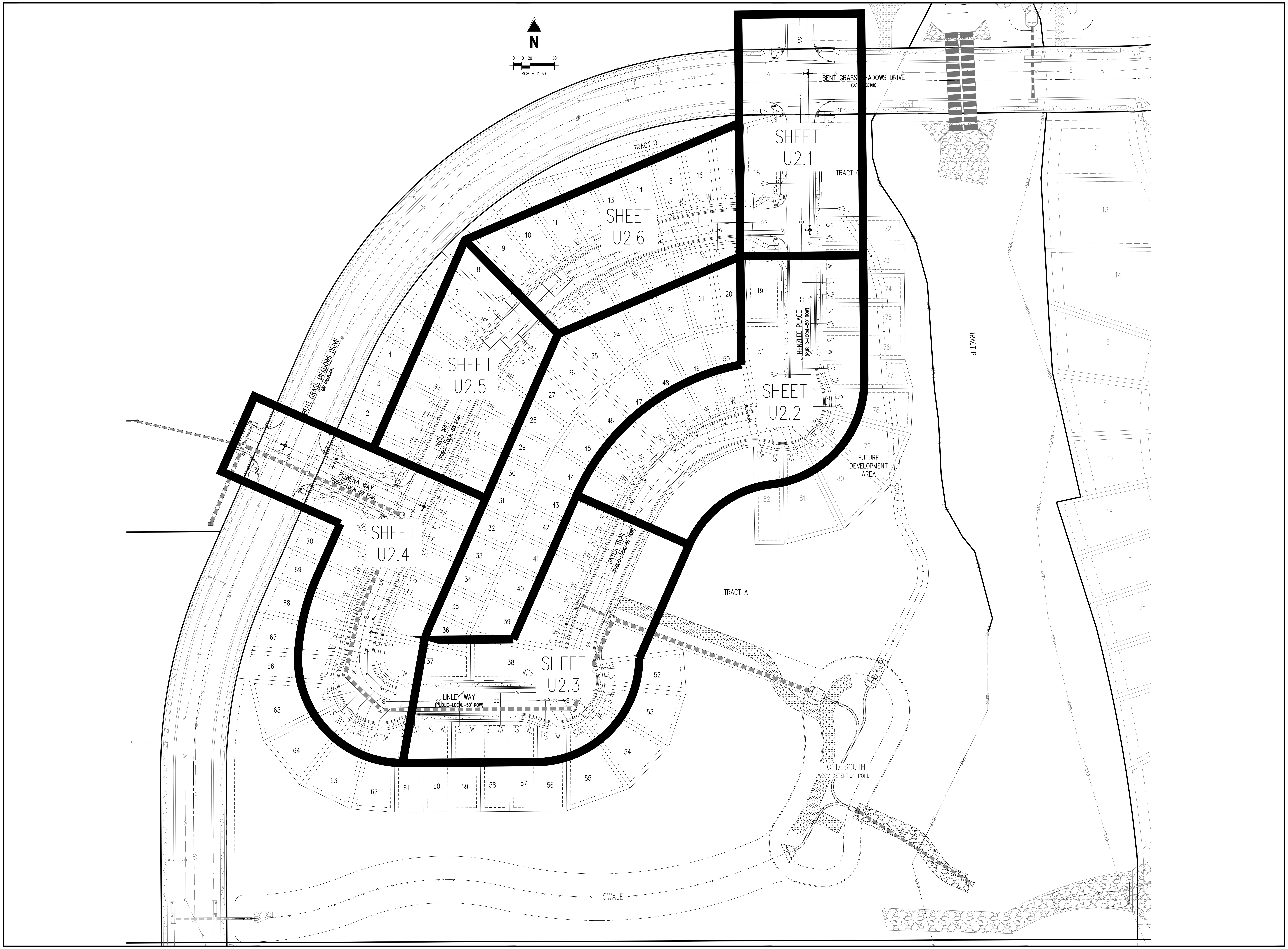

Galloway
1155 Kelly Johnson Blvd., Suite 305
Colorado Springs, CO 80920
719.900.7220
GallowayUS.com

COLORADO LICENSED PROFESSIONAL ENGINEER
04/07/2021

COPYRIGHT
THESE PLANS ARE AN INSTRUMENT OF SERVICE AND ARE THE PROPERTY OF GALLOWAY, AND MAY NOT BE DUPLICATED, DISCLOSED, OR REPRODUCED WITHOUT THE WRITTEN CONSENT OF GALLOWAY. COPYRIGHTS AND INFRINGEMENTS WILL BE ENFORCED AND PROSECUTED.

CHALLENGER HOMES

WATER & WASTEWATER CONSTRUCTION PLANS FALCON MEADOWS AT BENT GRASS FILING NO. 1 FOR CHALLENGER COMMUNITIES, LLC

BENT GRASS MEADOWS DRIVE & MERDIAN ROAD
FALCON, CO 80831 - EL PASO COUNTY

#	Date	Issue / Description	Init.

Project No:	CLH000018
Drawn By:	CMWJ
Checked By:	RGD
Date:	03/26/2021

WASTEWATER PLAN KEY MAP

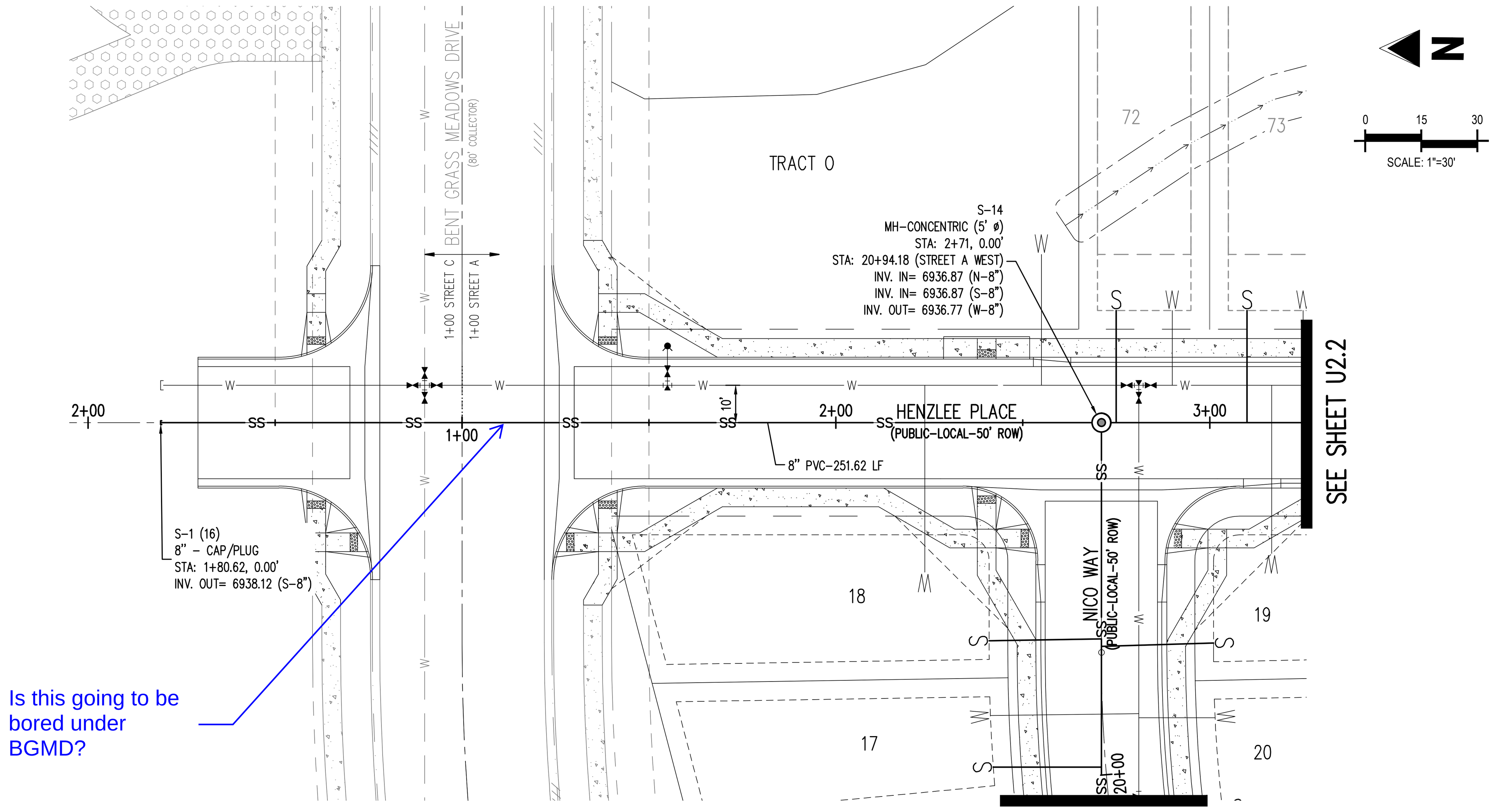

Is this going to be bored under BGMD?

PLAN: 8-INCH SANITARY SEWER (HENZLEE PLACE)
STA:1+00.00 – 3+00.00

Show the water crossing

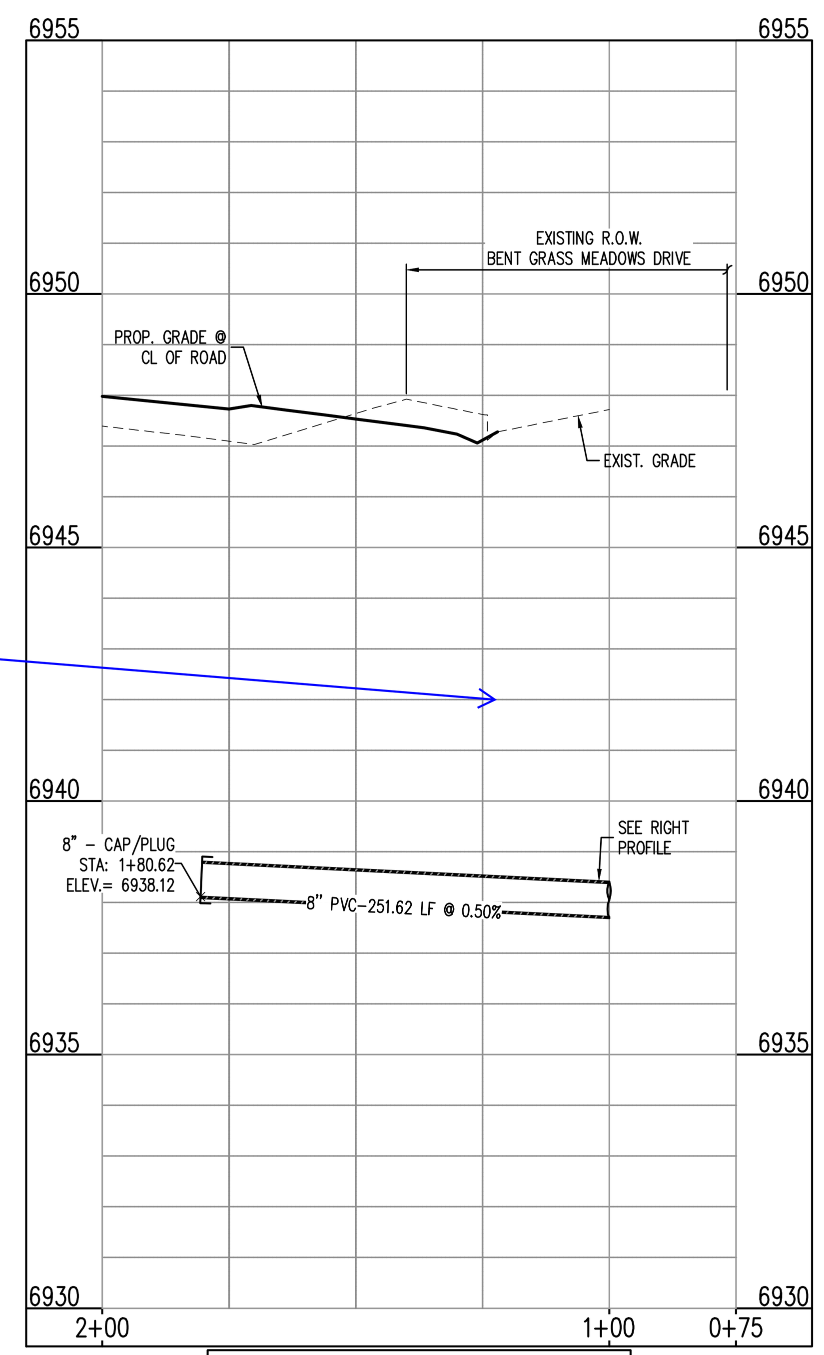

STREET C
STA: 0+75 – 2+00
SCALE: H: 1"=30' V: 1"=10'

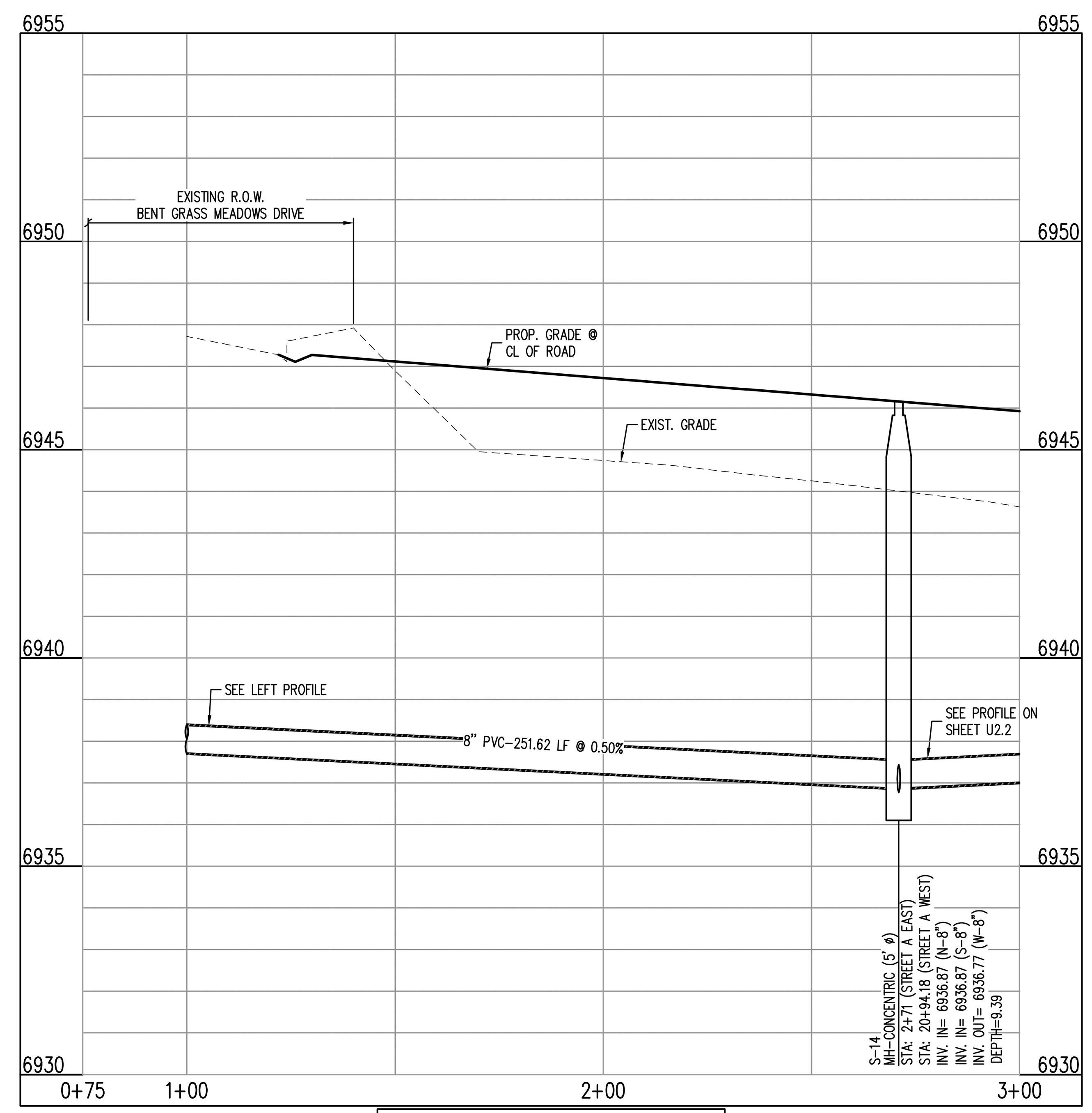

STREET A EAST
STA: 0+75 – 3+00
SCALE: H: 1"=30' V: 1"=10'

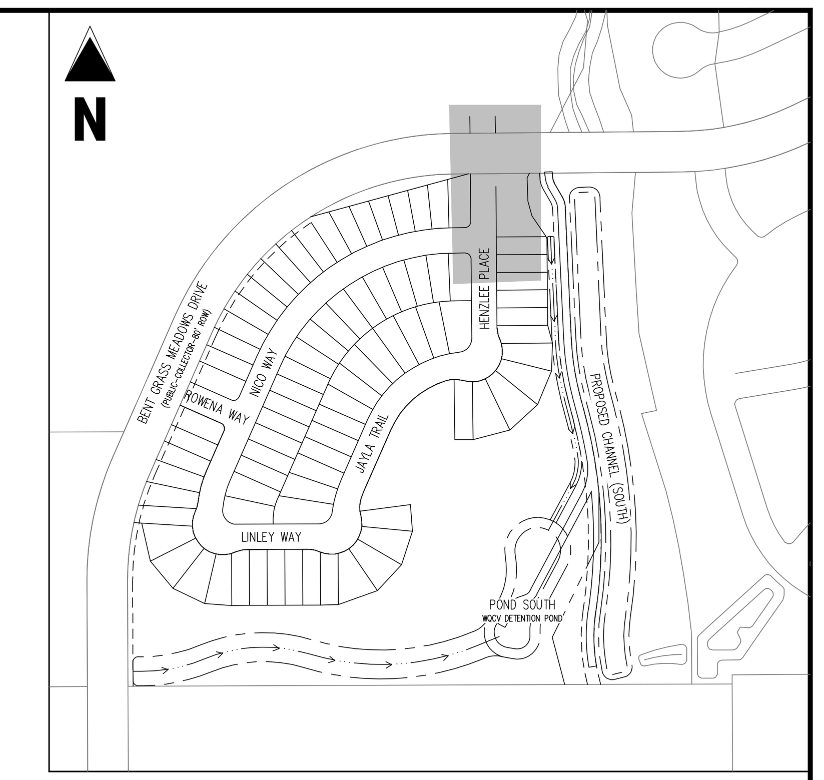

KEY MAP
SCALE: 1"=300'

LEGEND

- EXISTING PROPERTY LINE
- EXISTING PROPERTY LINE TO BE REMOVED
- PROPOSED RIGHT OF WAY LINE
- EXISTING LOT LINE
- PROPOSED LOT LINE
- EXISTING EASEMENT
- PROPOSED EASEMENT
- EXISTING SUBDIVISION BUFFER
- EXISTING STORM DRAIN PIPE
- PROPOSED STORM DRAIN PIPE
- EXISTING WATER LINE
- PROPOSED WATER LINE
- EXISTING SANITARY SEWER LINE
- PROPOSED SANITARY SEWER LINE
- EXISTING DRAINAGE FEATURE OUTLINE
- PROPOSED DRAINAGE FEATURE OUTLINE
- EXISTING SWALE WITH FLOW DIRECTION
- PROPOSED SWALE WITH FLOW DIRECTION
- 100-YEAR FEMA FLOODPLAIN
- PROPOSED CDOT CLASS 6 GRAVEL
- PROPOSED RIP RAP
- EXISTING CONCRETE PAVING
- EXISTING CDOT CLASS 6 GRAVEL
- EXISTING 1" TO 2" CRUSHED ROCK
- EXISTING RIP RAP
- EXISTING GROUTED BOULDERS
- 113 PROPOSED LOT #
- EXISTING LOT # (BENT GRASS FILING NO. 2)
- PROPOSED ADA RAMP
- PROPOSED FIRE HYDRANT
- PROPOSED GATE VALVE
- PROPOSED REDUCER
- PROPOSED WATER BEND/TEE
- PROPOSED SANITARY MANHOLE
- PROPOSED FES
- PROPOSED STORM MANHOLE
- PROPOSED CDOT TYPE R STORM INLET

NOTES

1. ALL STATION CALLOUTS ARE TO THE CENTERLINE OF ROADWAY, THEREFORE MANHOLE RIMS MAY APPEAR TO NOT MEET FINISH GRADE
2. CONTRACTOR TO READ AND BECOME FAMILIAR WITH THE WOODMEN HILLS METROPOLITAN DISTRICT WATER AND WASTEWATER SYSTEM STANDARD SPECIFICATIONS CRITERIA MANUAL AND DETAILS PRIOR TO BEGINNING CONSTRUCTION.

BASIS OF BEARINGS

ALL BEARINGS ARE GRID BEARINGS OF THE COLORADO STATE PLANE COORDINATE SYSTEM, CENTRAL ZONE, NORTH AMERICAN DATUM 1983. THE BEARING OF THE LINE BETWEEN THE SOUTHWEST CORNER OF SECTION 1, T13S, R65W AND THE WEST QUARTER CORNER SECTION 1, T13S, R65W IS N00°13'46"W AND MONUMENTED AS SHOWN:

BENCHMARK

THE SOUTHWESTERLY CORNER OF LOT 1 WOODMEN HILLS FILING NO. 4. MONUMENTED BY A YELLOW PLASTIC SURVEYORS CAP ON A NO. 4 REBAR LS# 24954 ELEVATION = 6947.67

CAUTION – NOTICE TO CONTRACTOR

1. ALL UTILITY LOCATIONS SHOWN ARE BASED ON MAPS PROVIDED BY THE APPROPRIATE UTILITY COMPANY AND FIELD SURFACE EVIDENCE AT THE TIME OF SURVEY AND IS TO BE CONSIDERED AN APPROXIMATE LOCATION ONLY. IT IS THE CONTRACTOR'S RESPONSIBILITY TO FIELD VERIFY THE FIELD LOCATION OF ALL UTILITIES, PUBLIC OR PRIVATE, WHETHER SHOWN ON THE PLANS OR NOT, PRIOR TO CONSTRUCTION. REPORT ANY DISCREPANCIES TO THE ENGINEEER PRIOR TO CONSTRUCTION.
2. WHERE A PROPOSED UTILITY CROSSES AN EXISTING UTILITY, IT IS THE CONTRACTOR'S RESPONSIBILITY TO FIELD VERIFY THE HORIZONTAL AND VERTICAL LOCATION OF SUCH EXISTING UTILITY, EITHER THROUGH POTHOLING OR ALTERNATIVE METHOD. REPORT INFORMATION TO THE ENGINEER PRIOR TO CONSTRUCTION.

811 Know what's below. Call before you dig.

Galloway
1155 Kelly Johnson Blvd., Suite 305
Colorado Springs, CO 80920
719.900.7220
GallowayUS.com

COLORADO LICENSED RONALD GRANT DE... PE 0051... PROFESSIONAL ENGINEER
04/07/2021

COPYRIGHT
THESE PLANS ARE AN INSTRUMENT OF SERVICE AND ARE THE PROPERTY OF GALLOWAY, AND MAY NOT BE DUPLICATED, DISCLOSED, OR REPRODUCED WITHOUT THE WRITTEN CONSENT OF GALLOWAY. COPYRIGHTS AND INFRINGEMENTS WILL BE ENFORCED AND PROSECUTED.

CHALLENGER HOMES

WATER & WASTEWATER CONSTRUCTION PLANS FALCON MEADOWS AT BENT GRASS FILING NO. 1 FOR CHALLENGER COMMUNITIES, LLC

BENT GRASS MEADOWS DRIVE & MERDIAN ROAD
FALCON, CO 80831 - EL PASO COUNTY

#	Date	Issue / Description	Init.

Project No:	CLH000018
Drawn By:	CMWJ
Checked By:	RGD
Date:	03/26/2021

WASTEWATER PLAN & PROFILE

U2.1

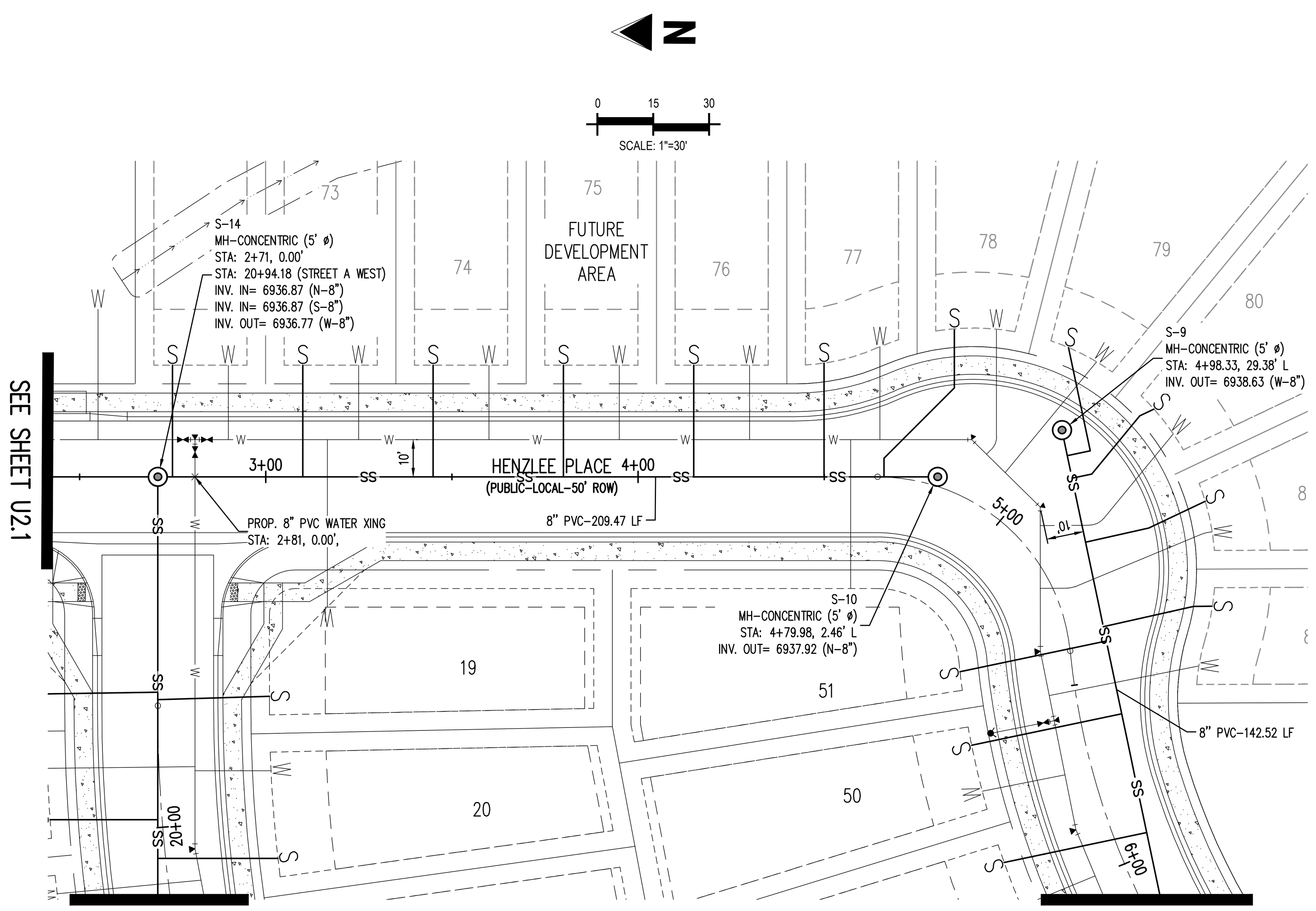

PLAN: 8-INCH SANITARY SEWER (HENZLEE PLACE)
STA: 2+50.00 – 5+50.00

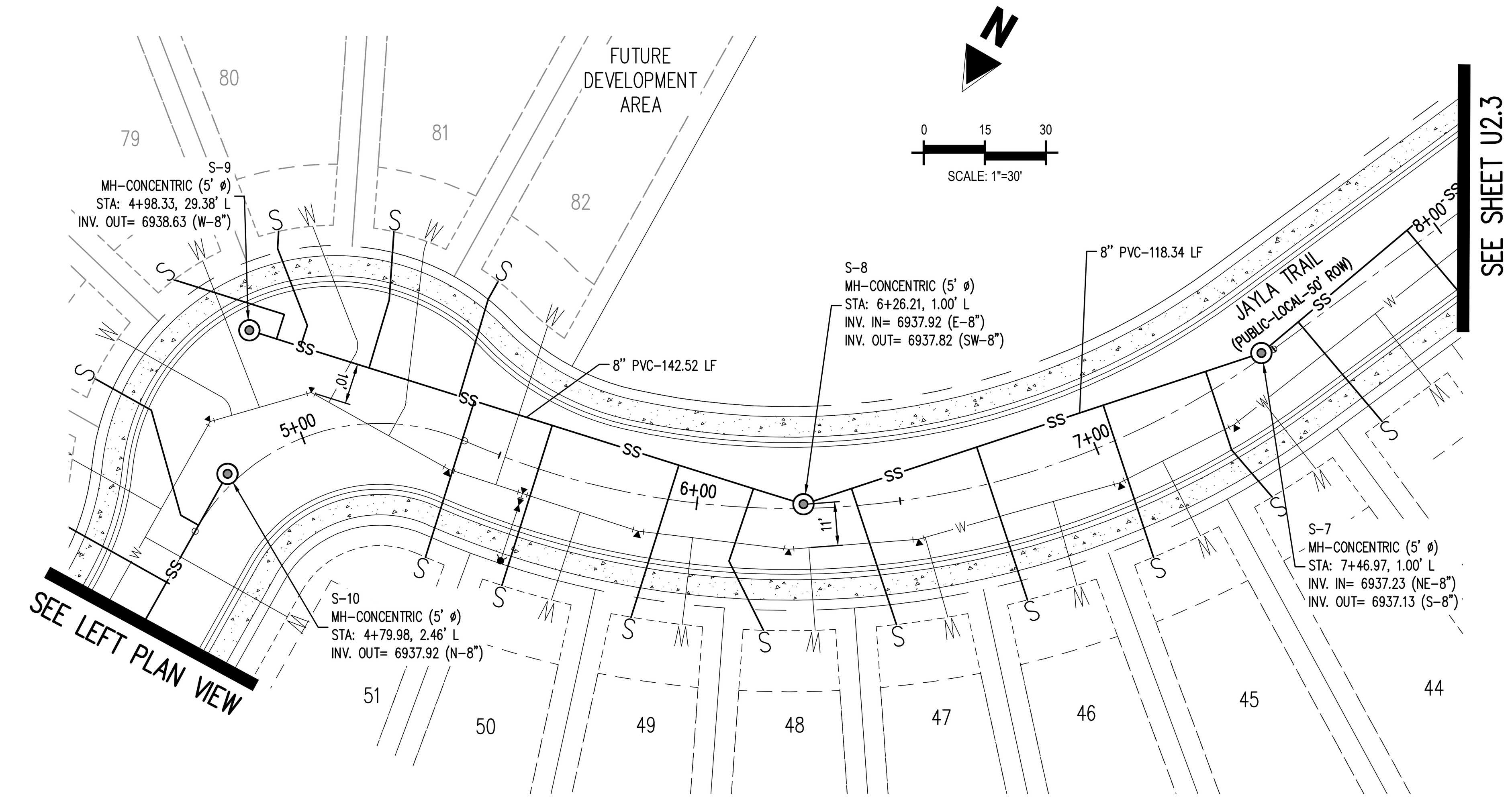

PLAN: 8-INCH SANITARY SEWER (JAYLA TRAIL)
STA: 5+50.00 – 8+00.00

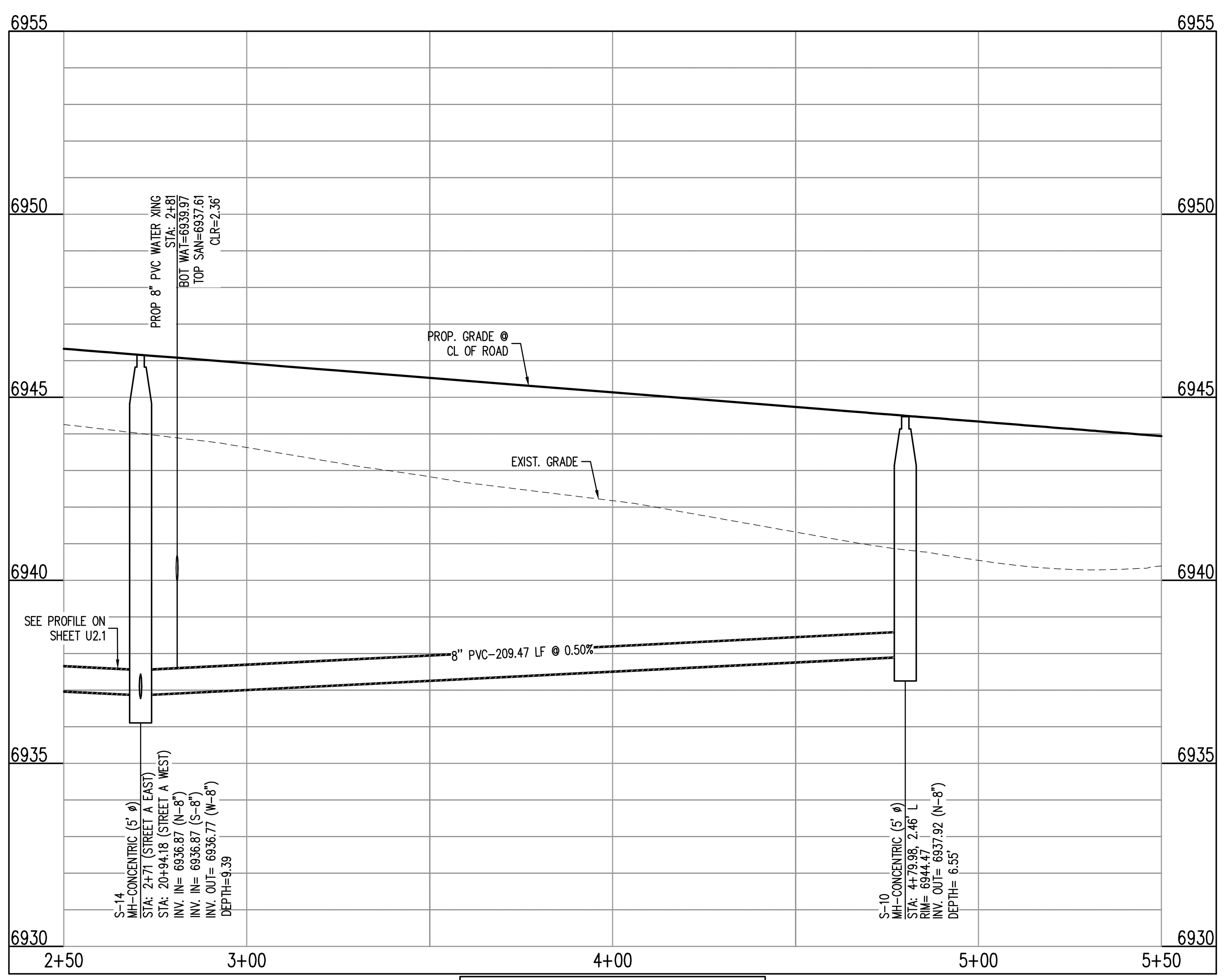

STREET A EAST
STA: 2+50 – 5+50
SCALE: H: 1"=30' V: 1"=10'

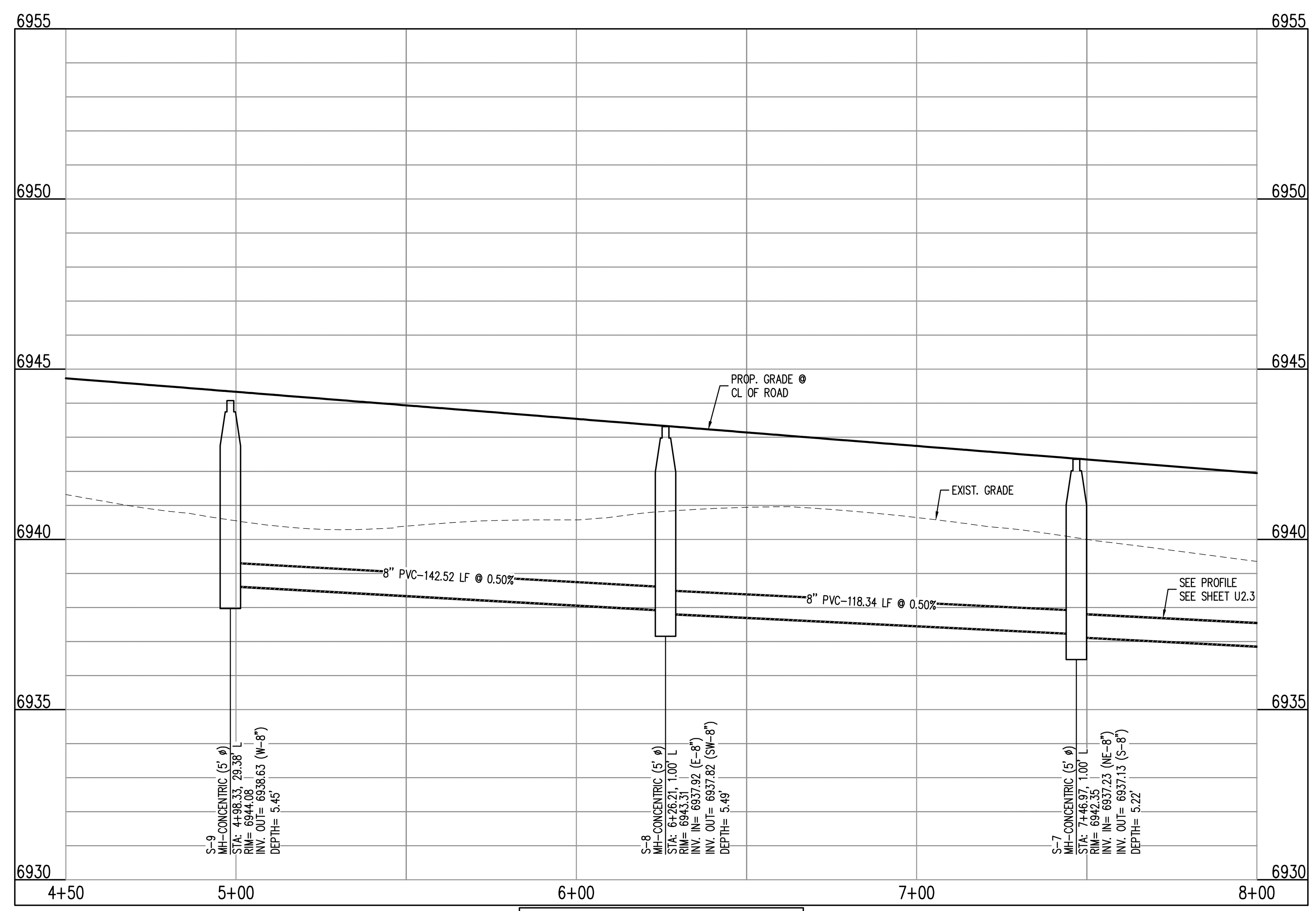

STREET A EAST
STA: 4+50 – 8+00
SCALE: H: 1"=30' V: 1"=10'

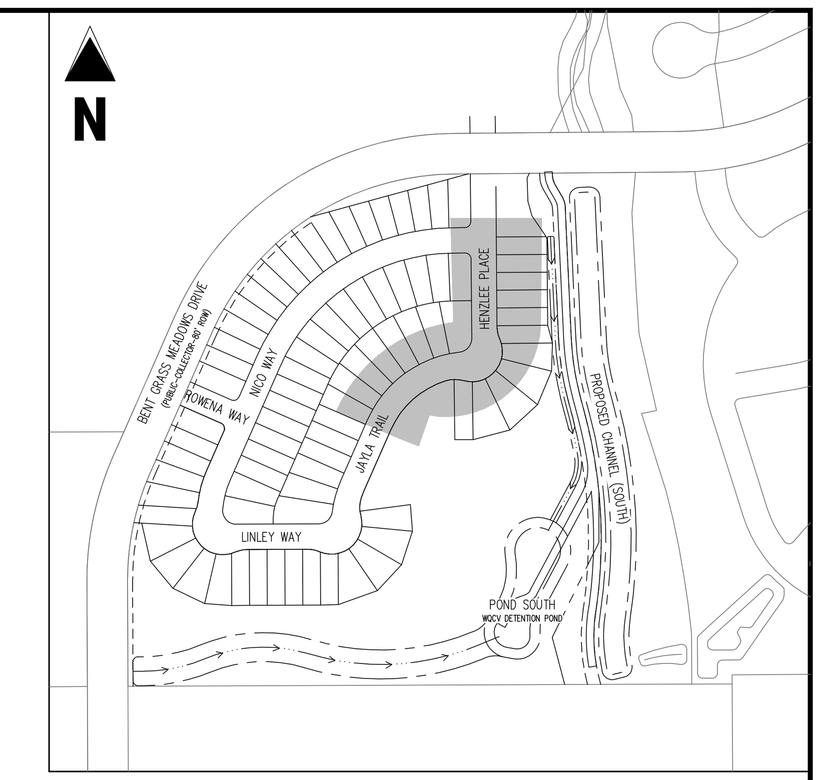

KEY MAP
SCALE: 1"=300'

LEGEND

- EXISTING PROPERTY LINE
- EXISTING PROPERTY LINE TO BE REMOVED
- PROPOSED RIGHT OF WAY LINE
- EXISTING LOT LINE
- PROPOSED LOT LINE
- EXISTING EASEMENT
- PROPOSED EASEMENT
- EXISTING SUBDIVISION BUFFER
- EXISTING STORM DRAIN PIPE
- PROPOSED STORM DRAIN PIPE
- EXISTING WATER LINE
- PROPOSED WATER LINE
- EXISTING SANITARY SEWER LINE
- PROPOSED SANITARY SEWER LINE
- EXISTING DRAINAGE FEATURE OUTLINE
- PROPOSED DRAINAGE FEATURE OUTLINE
- EXISTING SWALE WITH FLOW DIRECTION
- PROPOSED SWALE WITH FLOW DIRECTION
- 100-YEAR FEMA FLOODPLAIN
- PROPOSED CDOT CLASS 6 GRAVEL
- PROPOSED RIP RAP
- EXISTING CONCRETE PAVING
- EXISTING CDOT CLASS 6 GRAVEL
- EXISTING 1" TO 2" CRUSHED ROCK
- EXISTING RIP RAP
- EXISTING GROUTED BOULDERS
- 113 PROPOSED LOT #
- EXISTING LOT # (BENT GRASS FILING NO. 2)
- PROPOSED ADA RAMP
- PROPOSED FIRE HYDRANT
- PROPOSED GATE VALVE
- PROPOSED REDUCER
- PROPOSED WATER BEND/TEE
- PROPOSED SANITARY MANHOLE
- PROPOSED FES
- PROPOSED STORM MANHOLE
- PROPOSED CDOT TYPE R STORM INLET

NOTES

1. ALL STATION CALLOUTS ARE TO THE CENTERLINE OF ROADWAY, THEREFORE MANHOLE RIMS MAY APPEAR TO NOT MEET FINISH GRADE
2. CONTRACTOR TO READ AND BECOME FAMILIAR WITH THE WOODMEN HILLS METROPOLITAN DISTRICT WATER AND WASTEWATER SYSTEM STANDARD SPECIFICATIONS CRITERIA MANUAL AND DETAILS PRIOR TO BEGINNING CONSTRUCTION.

BASIS OF BEARINGS

ALL BEARINGS ARE GRID BEARINGS OF THE COLORADO STATE PLANE COORDINATE SYSTEM, CENTRAL ZONE, NORTH AMERICAN DATUM 1983. THE BEARING OF THE LINE BETWEEN THE SOUTHWEST CORNER OF SECTION 1, T13S, R65W AND THE WEST QUARTER CORNER SECTION 1, T13S, R65W IS N00°13'46"W AND MONUMENTED AS SHOWN:

BENCHMARK

THE SOUTHWESTERLY CORNER OF LOT 1 WOODMEN HILLS FILING NO. 4. MONUMENTED BY A YELLOW PLASTIC SURVEYORS CAP ON A NO. 4 REBAR LS# 24954 ELEVATION = 6947.67

CAUTION – NOTICE TO CONTRACTOR

1. ALL UTILITY LOCATIONS SHOWN ARE BASED ON MAPS PROVIDED BY THE APPROPRIATE UTILITY COMPANY AND FIELD SURFACE EVIDENCE AT THE TIME OF SURVEY AND IS TO BE CONSIDERED AN APPROXIMATE LOCATION ONLY. IT IS THE CONTRACTOR'S RESPONSIBILITY TO FIELD VERIFY THE FIELD LOCATION OF ALL UTILITIES, PUBLIC OR PRIVATE, WHETHER SHOWN ON THE PLANS OR NOT, PRIOR TO CONSTRUCTION. REPORT ANY DISCREPANCIES TO THE ENGINEEER PRIOR TO CONSTRUCTION.
2. WHERE A PROPOSED UTILITY CROSSES AN EXISTING UTILITY, IT IS THE CONTRACTOR'S RESPONSIBILITY TO FIELD VERIFY THE HORIZONTAL AND VERTICAL LOCATION OF SUCH EXISTING UTILITY, EITHER THROUGH POTHOLING OR ALTERNATIVE METHOD. REPORT INFORMATION TO THE ENGINEER PRIOR TO CONSTRUCTION.

811 Know what's **below.** **Call** before you dig.

Galloway
1155 Kelly Johnson Blvd., Suite 305
Colorado Springs, CO 80920
719.900.7220
GallowayUS.com

COLORADO LICENSED PE 0051922 RONALD GRANT ... PROFESSIONAL ENGINEER
04/07/2021

COPYRIGHT
THESE PLANS ARE AN INSTRUMENT OF SERVICE AND ARE THE PROPERTY OF GALLOWAY, AND MAY NOT BE DUPLICATED, DISCLOSED, OR REPRODUCED WITHOUT THE WRITTEN CONSENT OF GALLOWAY. COPYRIGHTS AND INFRINGEMENTS WILL BE ENFORCED AND PROSECUTED.

CHALLENGER HOMES

WATER & WASTEWATER CONSTRUCTION PLANS FALCON MEADOWS AT BENT GRASS FILING NO. 1 FOR CHALLENGER COMMUNTIES, LLC

BENT GRASS MEADOWS DRIVE & MERDIAN ROAD
FALCON, CO 80831 - EL PASO COUNTY

#	Date	Issue / Description	Init.

Project No:	CLH000018
Drawn By:	CMWJ
Checked By:	RGD
Date:	03/26/2021

WASTEWATER PLAN & PROFILE

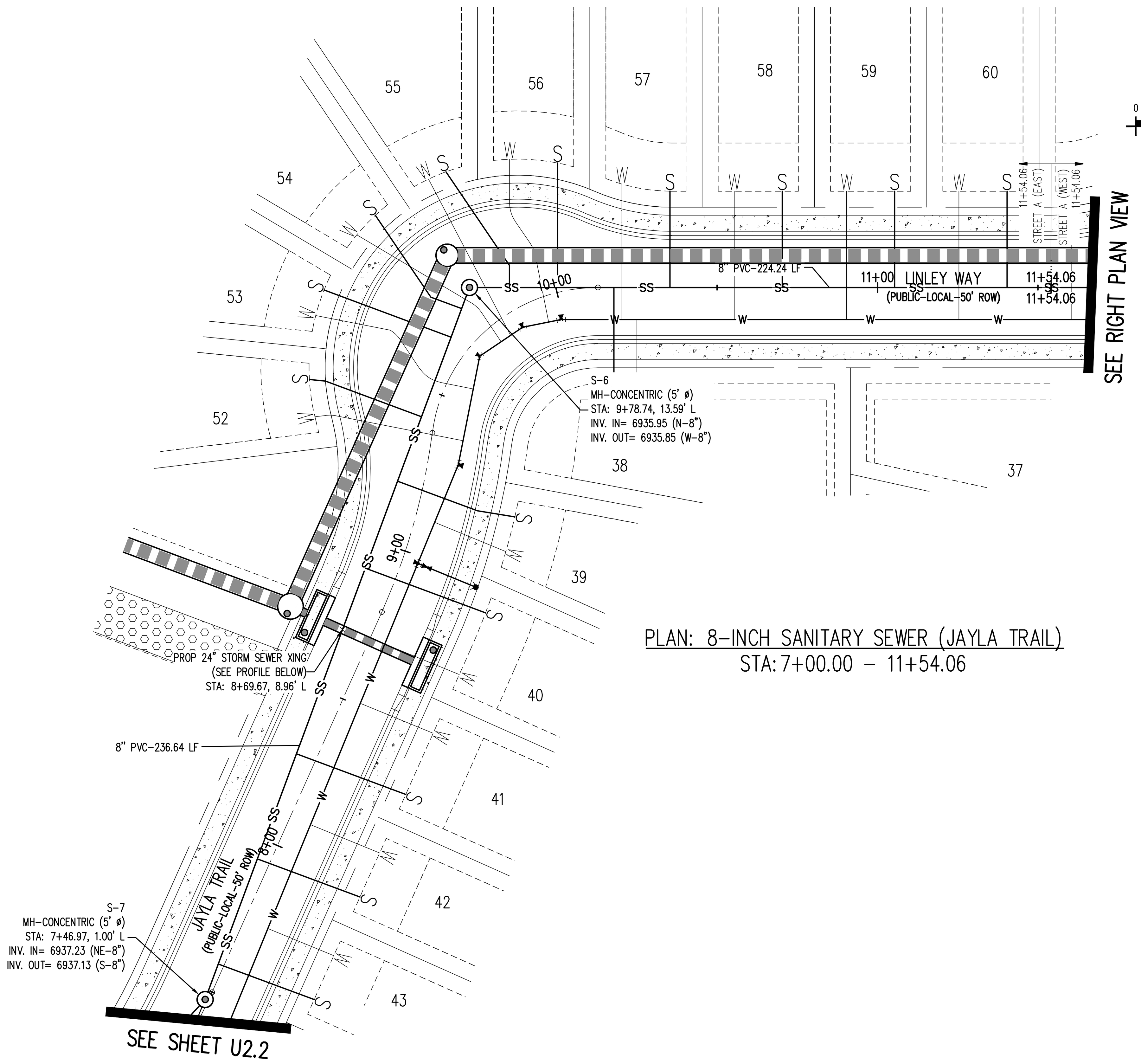

PLAN: 8-INCH SANITARY SEWER (JAYLA TRAIL)
STA: 7+00.00 – 11+54.06

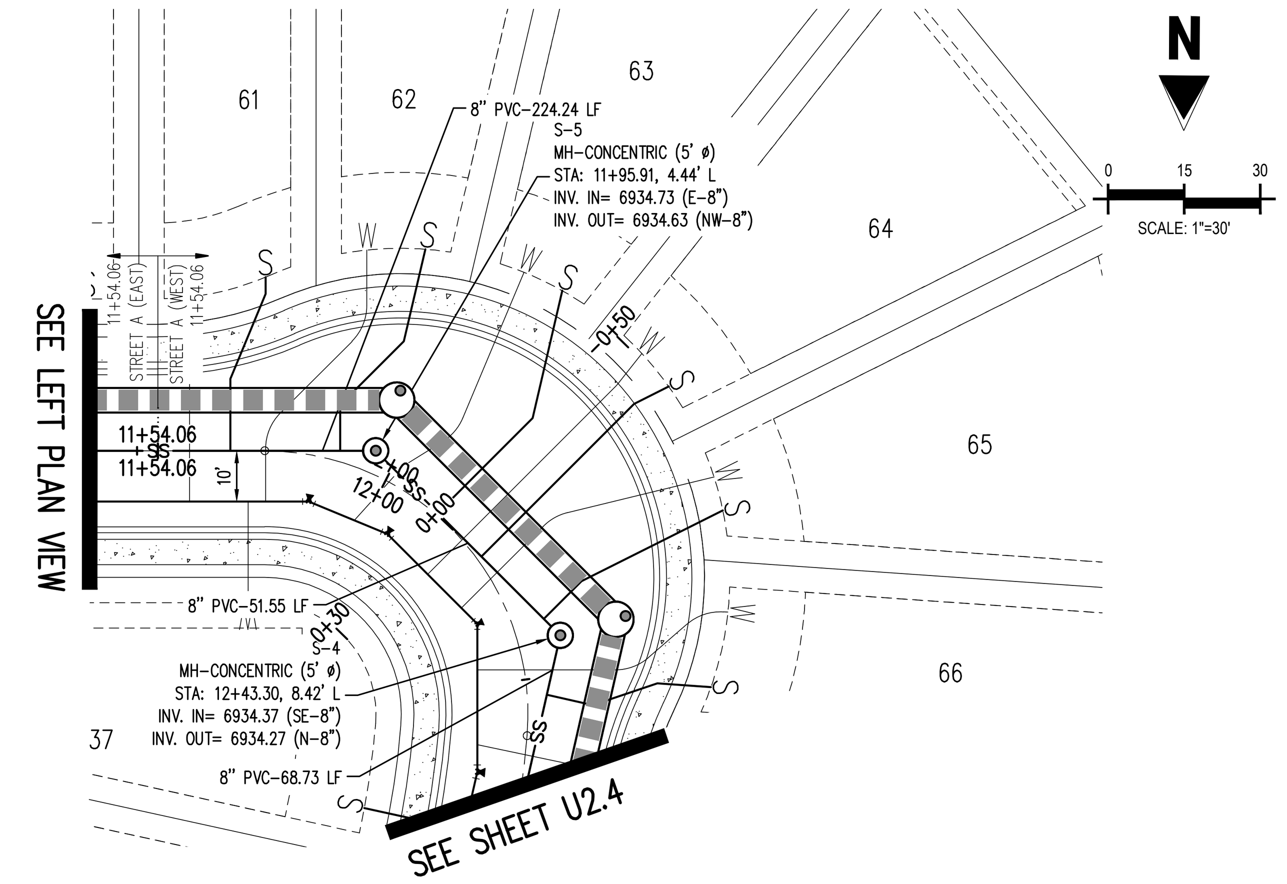

PLAN: 8-INCH SANITARY SEWER (LINLEY WAY)
STA: 11+54.06 – 12+70.00

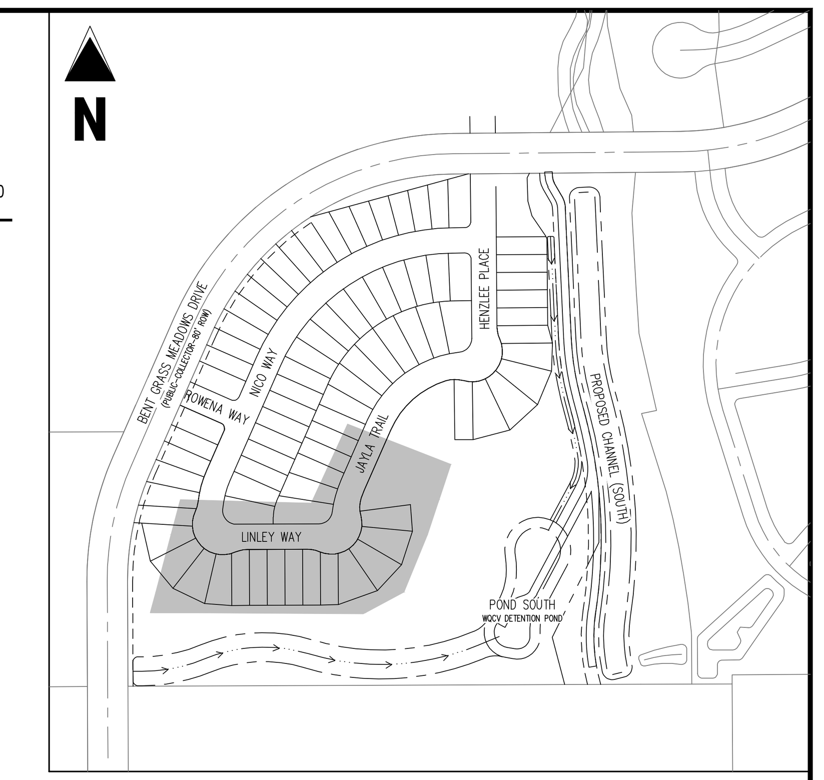

KEY MAP
SCALE: 1"=300'

LEGEND

- EXISTING PROPERTY LINE
- EXISTING PROPERTY LINE TO BE REMOVED
- PROPOSED RIGHT OF WAY LINE
- EXISTING LOT LINE
- PROPOSED LOT LINE
- EXISTING EASEMENT
- PROPOSED EASEMENT
- EXISTING SUBDIVISION BUFFER
- EXISTING STORM DRAIN PIPE
- PROPOSED STORM DRAIN PIPE
- EXISTING WATER LINE
- PROPOSED WATER LINE
- EXISTING SANITARY SEWER LINE
- PROPOSED SANITARY SEWER LINE
- EXISTING DRAINAGE FEATURE OUTLINE
- PROPOSED DRAINAGE FEATURE OUTLINE
- EXISTING SWALE WITH FLOW DIRECTION
- PROPOSED SWALE WITH FLOW DIRECTION
- 100-YEAR FEMA FLOODPLAIN
- PROPOSED CDOT CLASS 6 GRAVEL
- PROPOSED RIP RAP
- EXISTING CONCRETE PAVING
- EXISTING CDOT CLASS 6 GRAVEL
- EXISTING 1" TO 2" CRUSHED ROCK
- EXISTING RIP RAP
- EXISTING GROUTED BOULDERS
- 113 PROPOSED LOT #
- 161 EXISTING LOT # (BENT GRASS FILING NO. 2)
- PROPOSED ADA RAMP
- PROPOSED FIRE HYDRANT
- PROPOSED GATE VALVE
- PROPOSED REDUCER
- PROPOSED WATER BEND/TEE
- PROPOSED SANITARY MANHOLE
- PROPOSED FES
- PROPOSED STORM MANHOLE
- PROPOSED CDOT TYPE R STORM INLET

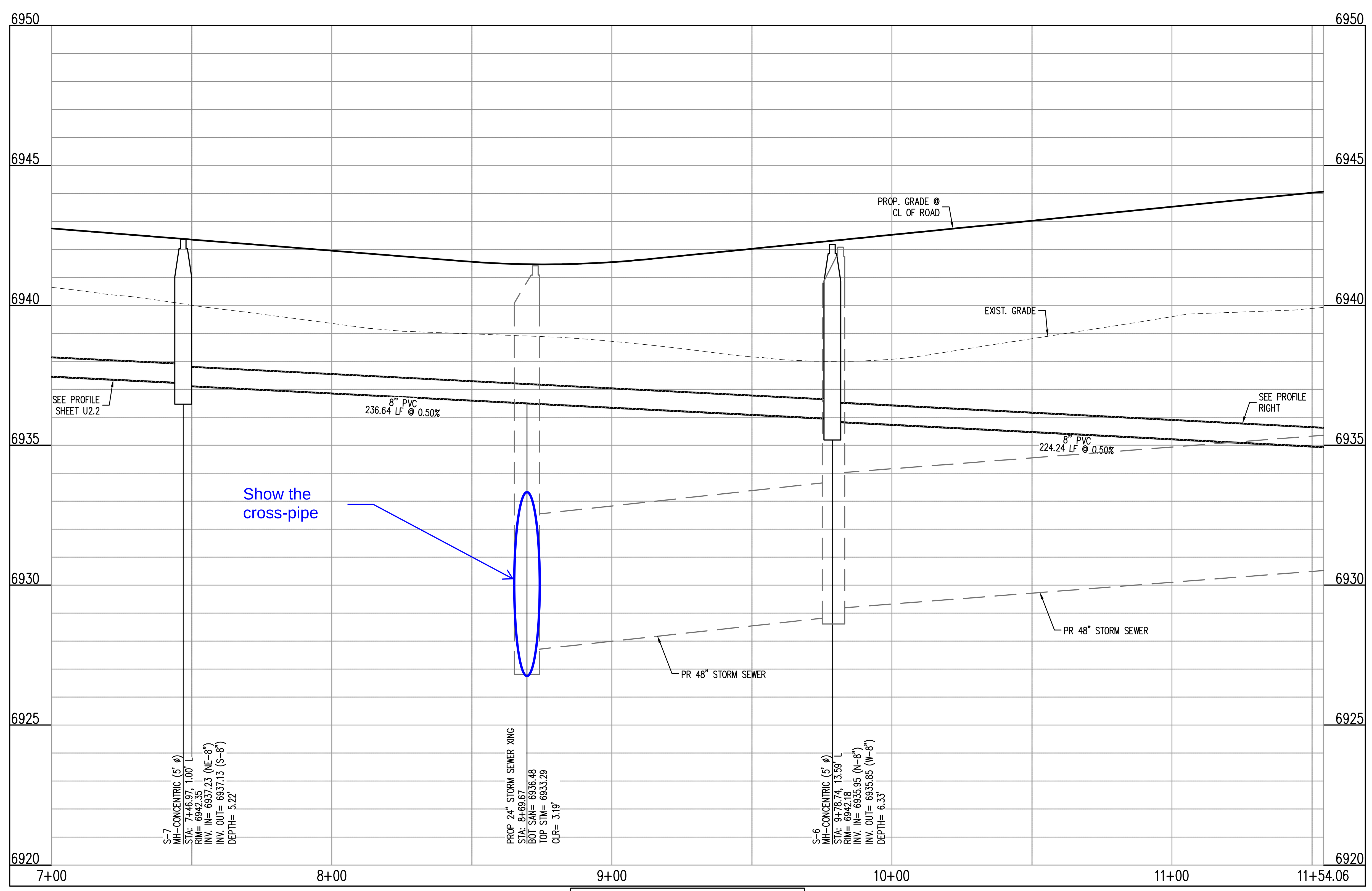

STREET A EAST
STA: 7+00 – 11+54.06
SCALE: H: 1"=30' V: 1"=10'

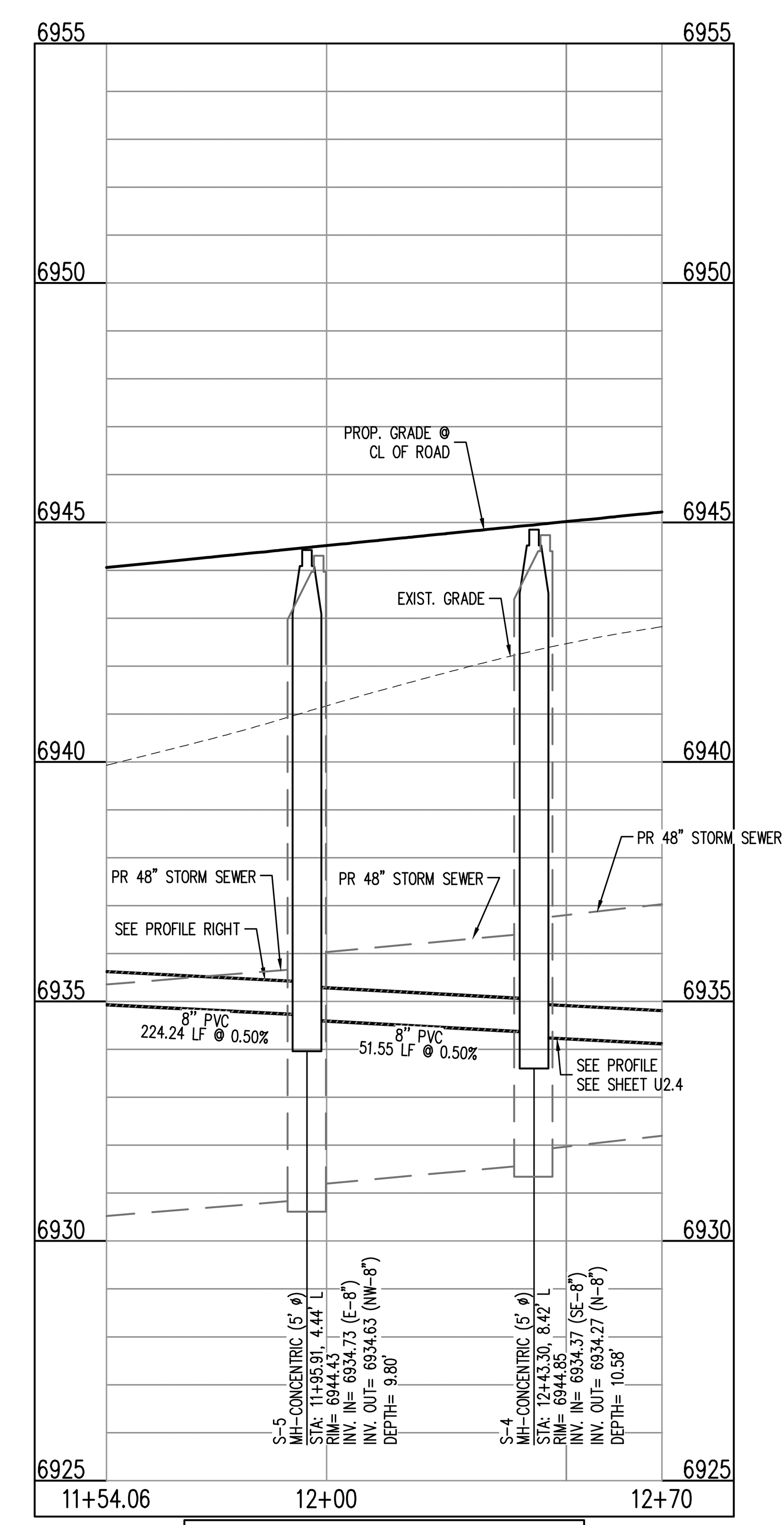

STREET A WEST
STA: 11+54.06 – 12+70
SCALE: H: 1"=30' V: 1"=10'

NOTES

1. ALL STATION CALLOUTS ARE TO THE CENTERLINE OF ROADWAY, THEREFORE MANHOLE RIMS MAY APPEAR TO NOT MEET FINISH GRADE
2. CONTRACTOR TO READ AND BECOME FAMILIAR WITH THE WOODMEN HILLS METROPOLITAN DISTRICT WATER AND WASTEWATER SYSTEM STANDARD SPECIFICATIONS CRITERIA MANUAL AND DETAILS PRIOR TO BEGINNING CONSTRUCTION.

BASIS OF BEARINGS

ALL BEARINGS ARE GRID BEARINGS OF THE COLORADO STATE PLANE COORDINATE SYSTEM, CENTRAL ZONE, NORTH AMERICAN DATUM 1983. THE BEARING OF THE LINE BETWEEN THE SOUTHWEST CORNER OF SECTION 1, T13S, R65W AND THE WEST QUARTER CORNER SECTION 1, T13S, R65W IS N00°13'46"W AND MONUMENTED AS SHOWN:

BENCHMARK

THE SOUTHWESTERLY CORNER OF LOT 1 WOODMEN HILLS FILING NO. 4. MONUMENTED BY A YELLOW PLASTIC SURVEYORS CAP ON A NO. 4 REBAR LS# 24954 ELEVATION = 6947.67

CAUTION – NOTICE TO CONTRACTOR

1. ALL UTILITY LOCATIONS SHOWN ARE BASED ON MAPS PROVIDED BY THE APPROPRIATE UTILITY COMPANY AND FIELD SURFACE EVIDENCE AT THE TIME OF SURVEY AND IS TO BE CONSIDERED AN APPROXIMATE LOCATION ONLY. IT IS THE CONTRACTOR'S RESPONSIBILITY TO FIELD VERIFY THE FIELD LOCATION OF ALL UTILITIES, PUBLIC OR PRIVATE, WHETHER SHOWN ON THE PLANS OR NOT, PRIOR TO CONSTRUCTION. REPORT ANY DISCREPANCIES TO THE ENGINEEER PRIOR TO CONSTRUCTION.
2. WHERE A PROPOSED UTILITY CROSSES AN EXISTING UTILITY, IT IS THE CONTRACTOR'S RESPONSIBILITY TO FIELD VERIFY THE HORIZONTAL AND VERTICAL LOCATION OF SUCH EXISTING UTILITY, EITHER THROUGH POTHOLING OR ALTERNATIVE METHOD. REPORT INFORMATION TO THE ENGINEER PRIOR TO CONSTRUCTION.

811 Know what's **below.** **Call** before you dig.

Galloway
1155 Kelly Johnson Blvd., Suite 305
Colorado Springs, CO 80920
719.900.7220
GallowayUS.com

04/07/2021

COPYRIGHT
THESE PLANS ARE AN INSTRUMENT OF SERVICE AND ARE THE PROPERTY OF GALLOWAY, AND MAY NOT BE DUPLICATED, DISCLOSED, OR REPRODUCED WITHOUT THE WRITTEN CONSENT OF GALLOWAY. COPYRIGHTS AND INFRINGEMENTS WILL BE ENFORCED AND PROSECUTED.

CHALLENGER HOMES

WATER & WASTEWATER CONSTRUCTION PLANS
FALCON MEADOWS AT BENT GRASS FILING NO. 1
FOR
CHALLENGER COMMUNITIES, LLC

BENT GRASS MEADOWS DRIVE & MERDIAN ROAD
FALCON, CO 80831 - EL PASO COUNTY

#	Date	Issue / Description	Init.

Project No:	CLH000018
Drawn By:	CMWJ
Checked By:	RGD
Date:	03/26/2021

WASTEWATER PLAN & PROFILE

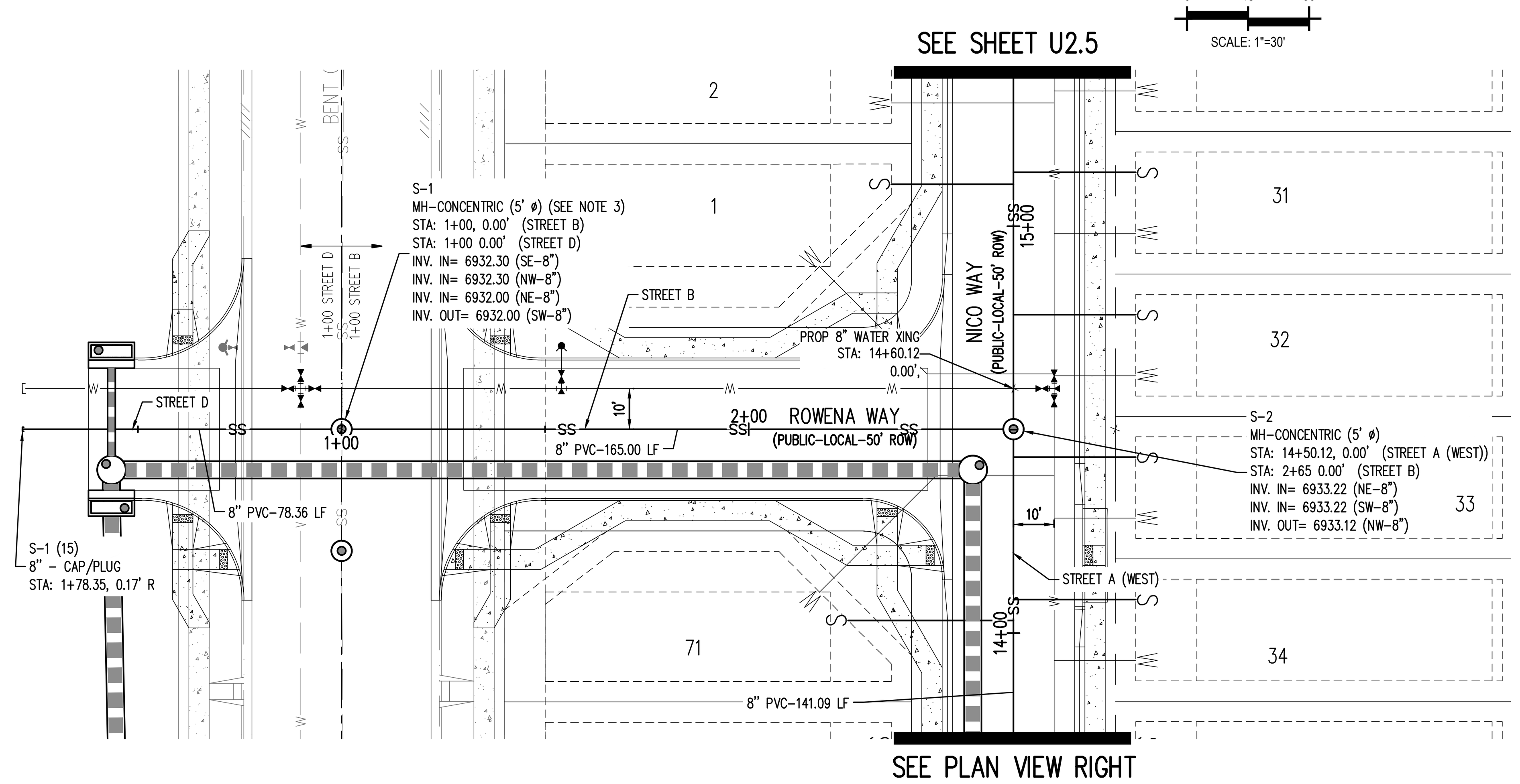

PLAN: 8-INCH SANITARY SEWER (ROWENA WAY)
STA:1+00.00 – 2+65.00

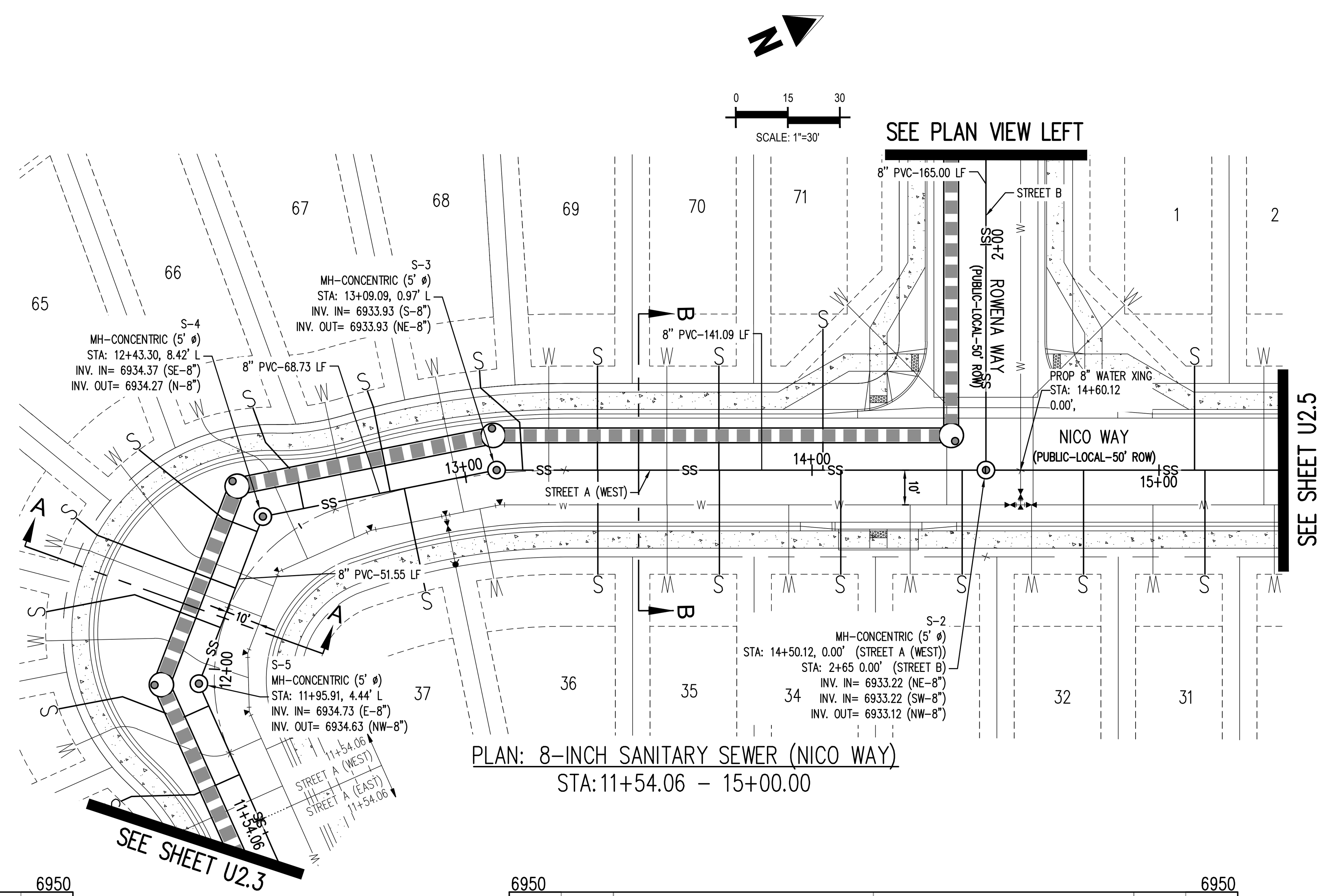

PLAN: 8-INCH SANITARY SEWER (NICO WAY)
STA:11+54.06 – 15+00.00

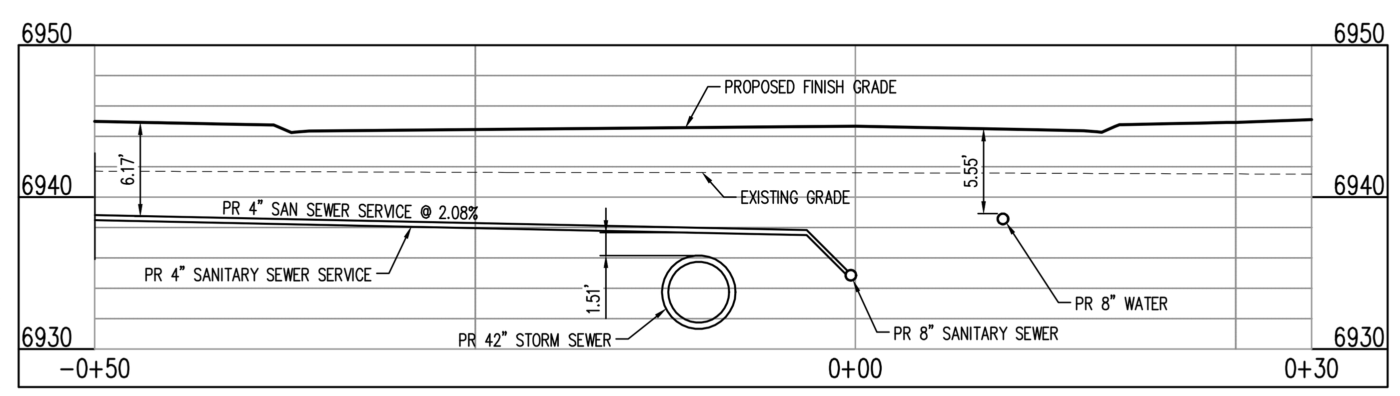

SECTION A–A
SCALE: H: 1"=10' V: 1"=10'

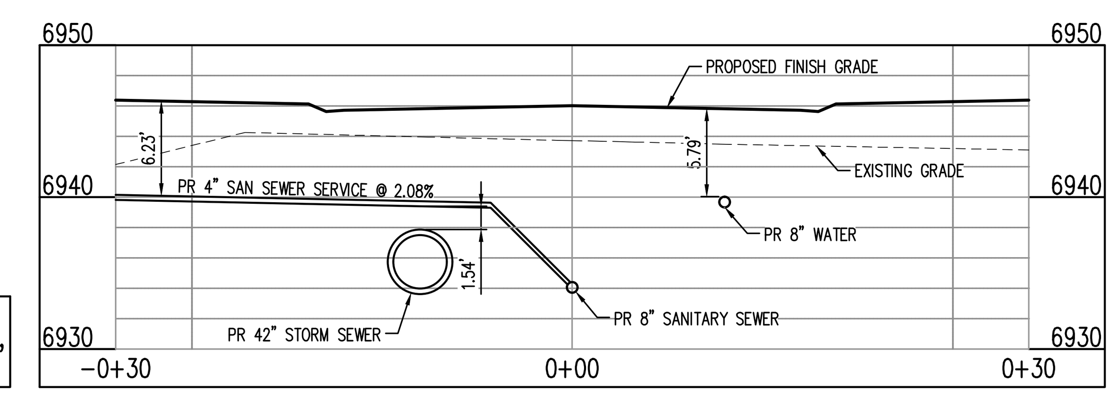

SECTION B–B
SCALE: H: 1"=10' V: 1"=10'

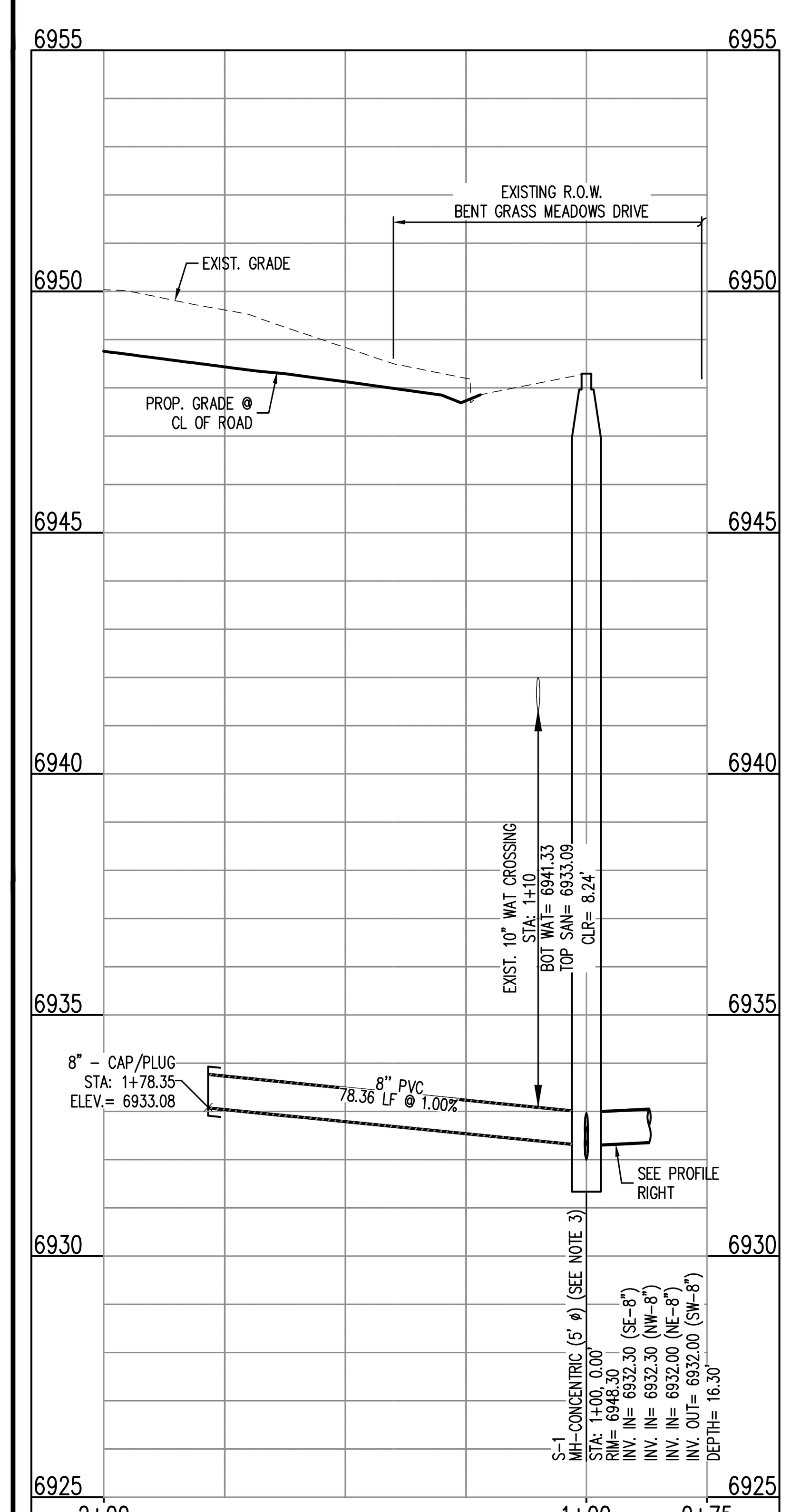

STREET D
STA: 0+75 – 2+00
SCALE: H: 1"=30' V: 1"=10'

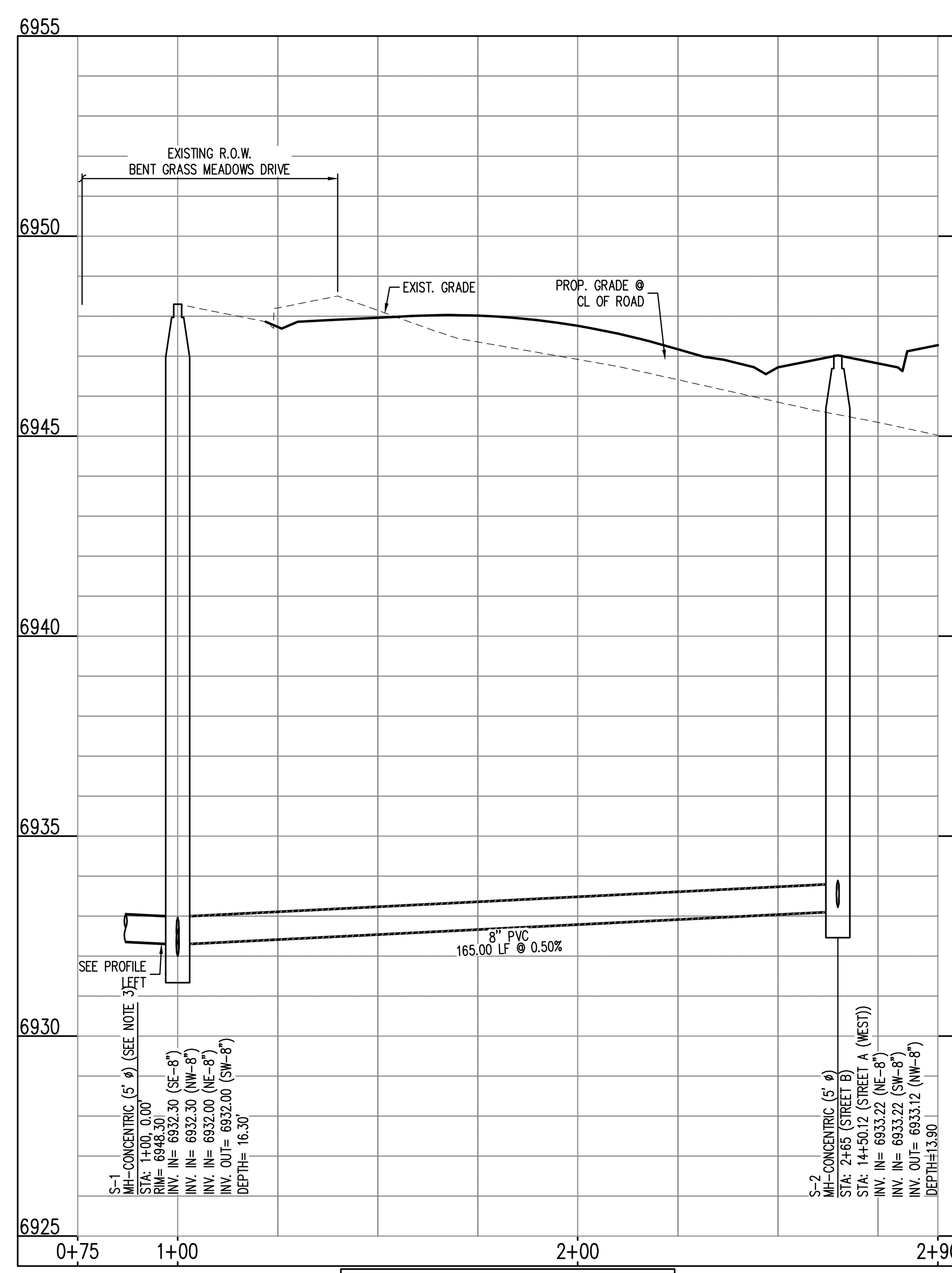

STREET B
STA: 0+75 – 2+90
SCALE: H: 1"=30' V: 1"=10'

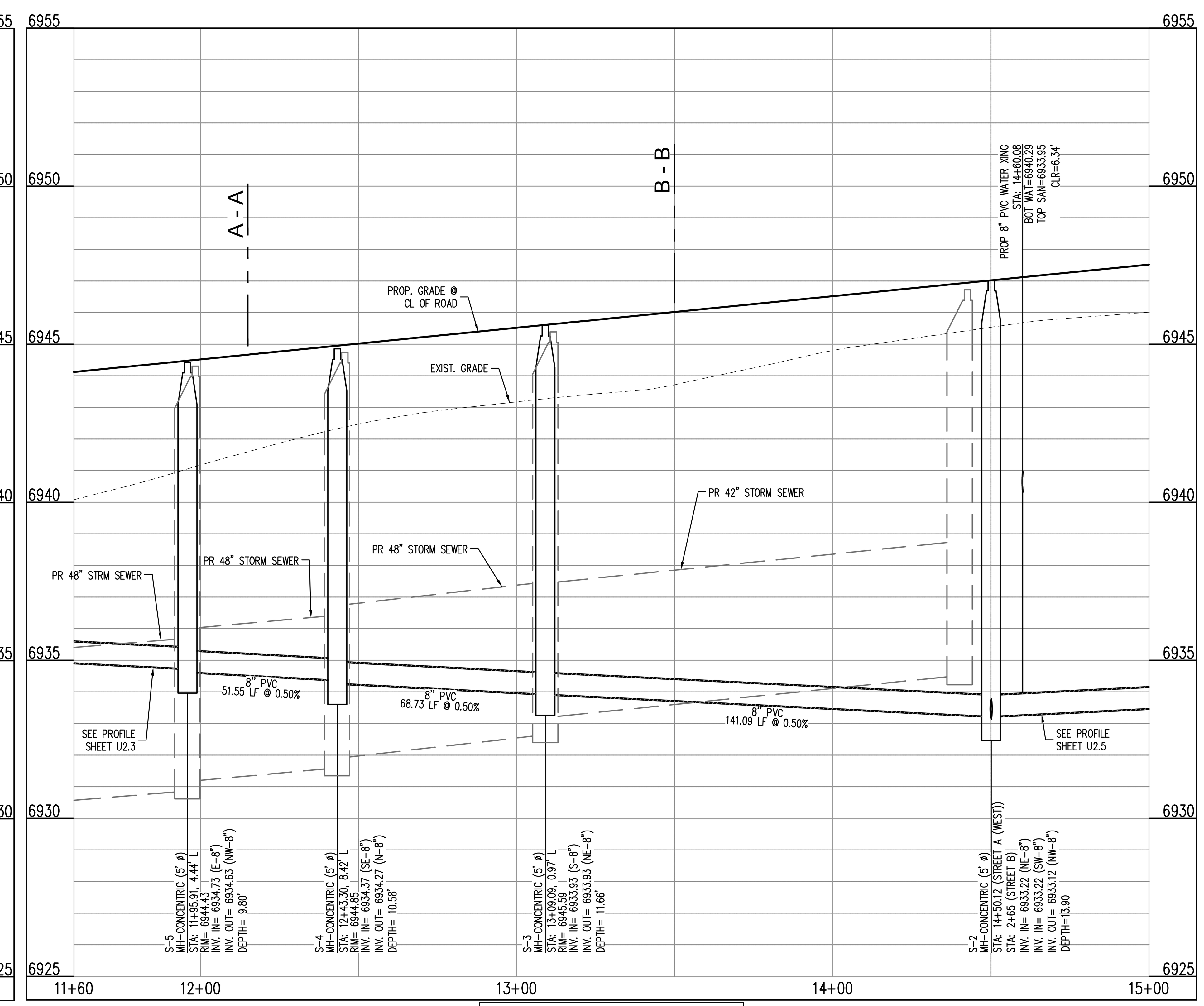

STREET A (WEST)
STA: 11+60 – 15+00
SCALE: H: 1"=30' V: 1"=10'

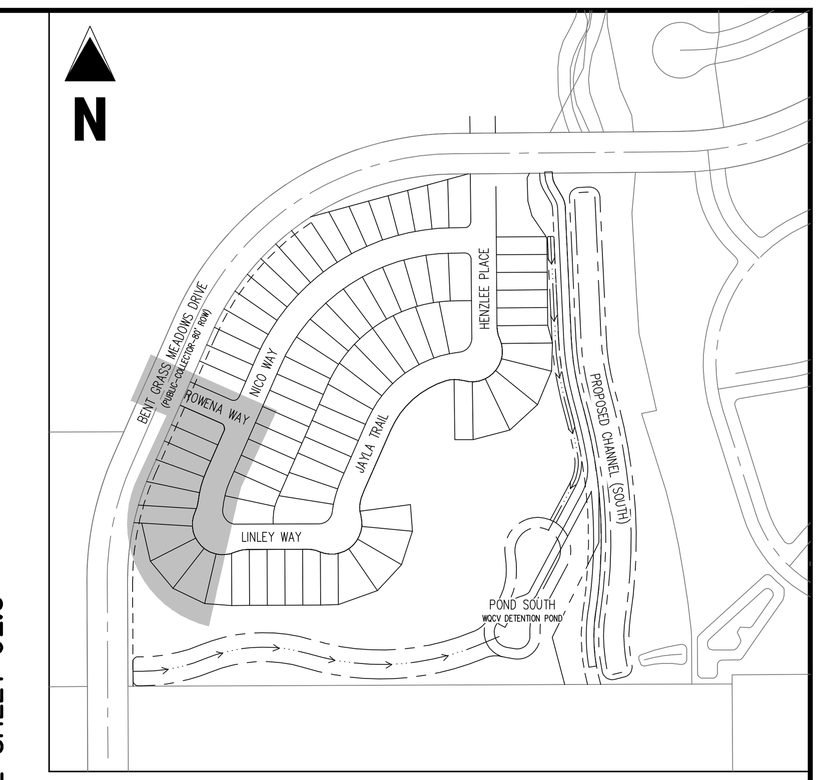

KEY MAP
SCALE: 1"=300'

LEGEND

- EXISTING PROPERTY LINE
- EXISTING PROPERTY LINE TO BE REMOVED
- PROPOSED RIGHT OF WAY LINE
- EXISTING LOT LINE
- PROPOSED LOT LINE
- EXISTING EASEMENT
- PROPOSED EASEMENT
- EXISTING SUBDIVISION BUFFER
- EXISTING STORM DRAIN PIPE
- PROPOSED STORM DRAIN PIPE
- EXISTING WATER LINE
- PROPOSED WATER LINE
- EXISTING SANITARY SEWER LINE
- PROPOSED SANITARY SEWER LINE
- EXISTING DRAINAGE FEATURE OUTLINE
- PROPOSED DRAINAGE FEATURE OUTLINE
- EXISTING SWALE WITH FLOW DIRECTION
- PROPOSED SWALE WITH FLOW DIRECTION
- 100-YEAR FEMA FLOODPLAIN
- PROPOSED CDOT CLASS 6 GRAVEL
- PROPOSED RIP RAP
- EXISTING CONCRETE PAVING
- EXISTING CDOT CLASS 6 GRAVEL
- EXISTING 1" TO 2" CRUSHED ROCK
- EXISTING RIP RAP
- EXISTING GROUTED BOULDERS
- 113 PROPOSED LOT #
- 161 EXISTING LOT # (BENT GRASS FILING NO. 2)
- PROPOSED ADA RAMP
- PROPOSED FIRE HYDRANT
- PROPOSED GATE VALVE
- PROPOSED REDUCER
- PROPOSED WATER BEND/TEE
- PROPOSED SANITARY MANHOLE
- PROPOSED FES
- PROPOSED STORM MANHOLE
- PROPOSED CDOT TYPE R STORM INLET

NOTES

1. ALL STATION CALLOUTS ARE TO THE CENTERLINE OF ROADWAY, THEREFORE MANHOLE RIMS MAY APPEAR TO NOT MEET FINISH GRADE.
2. CONTRACTOR TO READ AND BECOME FAMILIAR WITH THE WOODMEN HILLS METROPOLITAN DISTRICT WATER AND WASTEWATER SYSTEM STANDARD SPECIFICATIONS CRITERIA MANUAL AND DETAILS PRIOR TO BEGINNING CONSTRUCTION.
3. CUT IN NEW MANHOLE AT EXISTING SANITARY SEWER LINE. MAINTAIN SLOPES ON EXISTING SANITARY SEWER MAIN.

BASIS OF BEARINGS

ALL BEARINGS ARE GRID BEARINGS OF THE COLORADO STATE PLANE COORDINATE SYSTEM, CENTRAL ZONE, NORTH AMERICAN DATUM 1983. THE BEARING OF THE LINE BETWEEN THE SOUTHWEST CORNER OF SECTION 1, T13S, R65W AND THE WEST QUARTER CORNER SECTION 1, T13S, R65W IS N00°13'46"W AND MONUMENTED AS SHOWN.

BENCHMARK

THE SOUTHWESTERLY CORNER OF LOT 1 WOODMEN HILLS FILING NO. 4. MONUMENTED BY A YELLOW PLASTIC SURVEYORS CAP ON A NO. 4 REBAR LS# 24954 ELEVATION = 6947.67

CAUTION – NOTICE TO CONTRACTOR

1. ALL UTILITY LOCATIONS SHOWN ARE BASED ON MAPS PROVIDED BY THE APPROPRIATE UTILITY COMPANY AND FIELD SURFACE EVIDENCE AT THE TIME OF SURVEY AND IS TO BE CONSIDERED AN APPROXIMATE LOCATION ONLY. IT IS THE CONTRACTOR'S RESPONSIBILITY TO FIELD VERIFY THE FIELD LOCATION OF ALL UTILITIES, PUBLIC OR PRIVATE, WHETHER SHOWN ON THE PLANS OR NOT, PRIOR TO CONSTRUCTION. REPORT ANY DISCREPANCIES TO THE ENGINEER PRIOR TO CONSTRUCTION.
2. WHERE A PROPOSED UTILITY CROSSES AN EXISTING UTILITY, IT IS THE CONTRACTOR'S RESPONSIBILITY TO FIELD VERIFY THE HORIZONTAL AND VERTICAL LOCATION OF SUCH EXISTING UTILITY, EITHER THROUGH POTHOLING OR ALTERNATIVE METHOD. REPORT INFORMATION TO THE ENGINEER PRIOR TO CONSTRUCTION.

811 Know what's **below.** Call before you dig.

Galloway
1155 Kelly Johnson Blvd., Suite 305
Colorado Springs, CO 80920
719.900.7220
GallowayUS.com

04/07/2021

COPYRIGHT
THESE PLANS ARE AN INSTRUMENT OF SERVICE AND ARE THE PROPERTY OF GALLOWAY, AND MAY NOT BE DUPLICATED, DISCLOSED, OR REPRODUCED WITHOUT THE WRITTEN CONSENT OF GALLOWAY. COPYRIGHTS AND INFRINGEMENTS WILL BE ENFORCED AND PROSECUTED.

CHALLENGER HOMES

WATER & WASTEWATER CONSTRUCTION PLANS FALCON MEADOWS AT BENT GRASS FILING NO. 1 FOR CHALLENGER COMMUNITIES, LLC

BENT GRASS MEADOWS DRIVE & MERDIAN ROAD
FALCON, CO 80831 - EL PASO COUNTY

#	Date	Issue / Description	Init.

Project No:	CLH000018
Drawn By:	CMWJ
Checked By:	RGD
Date:	03/26/2021

WASTEWATER PLAN & PROFILE

U2.4

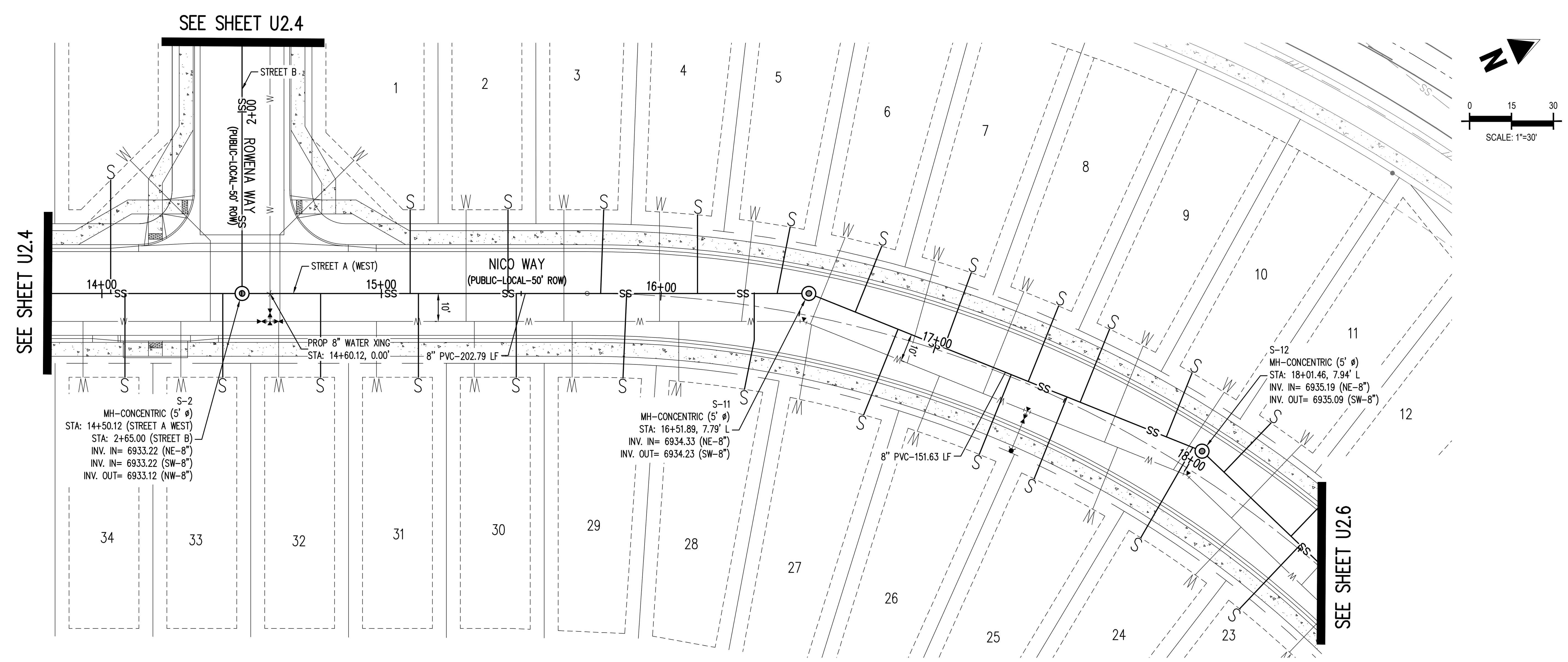

PLAN: 8-INCH SANITARY SEWER (NICO WAY)
STA:14+00.00 - 18+50.00

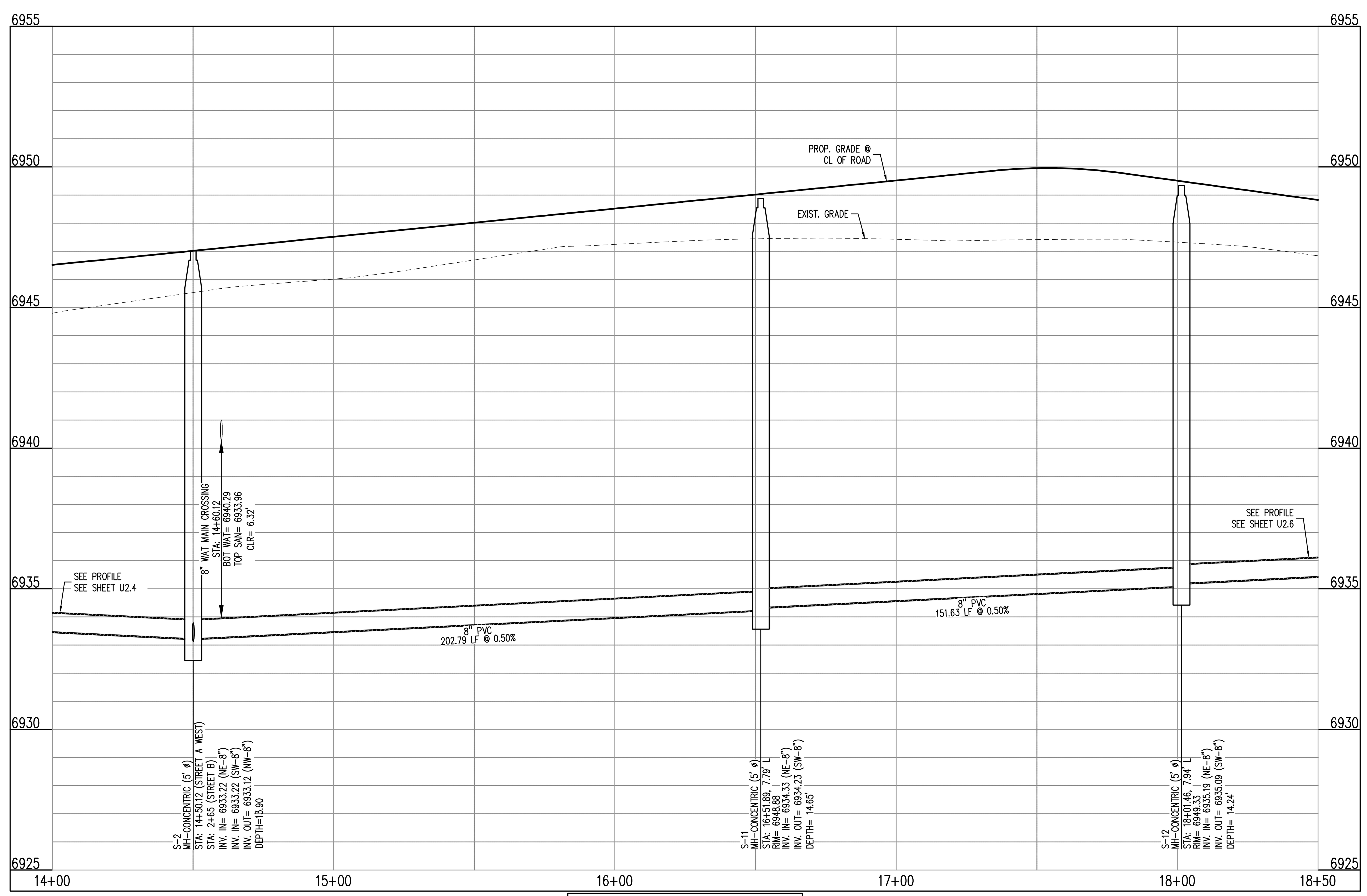

STREET A WEST
STA: 14+00 - 18+50
SCALE: H: 1"=30' V: 1"=10'

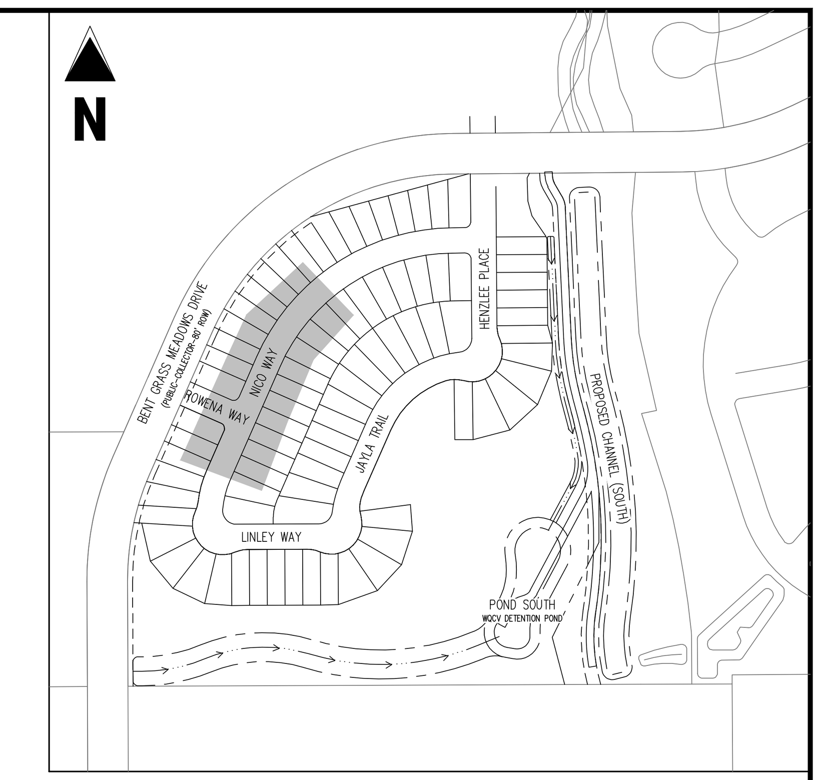

KEY MAP
SCALE: 1"=300'

LEGEND

- EXISTING PROPERTY LINE
- EXISTING PROPERTY LINE TO BE REMOVED
- PROPOSED RIGHT OF WAY LINE
- EXISTING LOT LINE
- PROPOSED LOT LINE
- EXISTING EASEMENT
- PROPOSED EASEMENT
- EXISTING SUBDIVISION BUFFER
- EXISTING STORM DRAIN PIPE
- PROPOSED STORM DRAIN PIPE
- EXISTING WATER LINE
- PROPOSED WATER LINE
- EXISTING SANITARY SEWER LINE
- PROPOSED SANITARY SEWER LINE
- EXISTING DRAINAGE FEATURE OUTLINE
- PROPOSED DRAINAGE FEATURE OUTLINE
- EXISTING SWALE WITH FLOW DIRECTION
- PROPOSED SWALE WITH FLOW DIRECTION
- 100-YEAR FEMA FLOODPLAIN
- PROPOSED CDOT CLASS 6 GRAVEL
- PROPOSED RIP RAP
- EXISTING CONCRETE PAVING
- EXISTING CDOT CLASS 6 GRAVEL
- EXISTING 1" TO 2" CRUSHED ROCK
- EXISTING RIP RAP
- EXISTING GROUTED BOULDERS
- 113 PROPOSED LOT #
- EXISTING LOT # (BENT GRASS FILING NO. 2)
- PROPOSED ADA RAMP
- PROPOSED FIRE HYDRANT
- PROPOSED GATE VALVE
- PROPOSED REDUCER
- PROPOSED WATER BEND/TEE
- PROPOSED SANITARY MANHOLE
- PROPOSED FES
- PROPOSED STORM MANHOLE
- PROPOSED CDOT TYPE R STORM INLET

NOTES

1. ALL STATION CALLOUTS ARE TO THE CENTERLINE OF ROADWAY, THEREFORE MANHOLE RIMS MAY APPEAR TO NOT MEET FINISH GRADE
2. CONTRACTOR TO READ AND BECOME FAMILIAR WITH THE WOODMEN HILLS METROPOLITAN DISTRICT WATER AND WASTEWATER SYSTEM STANDARD SPECIFICATIONS CRITERIA MANUAL AND DETAILS PRIOR TO BEGINNING CONSTRUCTION.

BASIS OF BEARINGS

ALL BEARINGS ARE GRID BEARINGS OF THE COLORADO STATE PLANE COORDINATE SYSTEM, CENTRAL ZONE, NORTH AMERICAN DATUM 1983. THE BEARING OF THE LINE BETWEEN THE SOUTHWEST CORNER OF SECTION 1, T13S, R65W AND THE WEST QUARTER CORNER SECTION 1, T13S, R65W IS N00°13'46"W AND MONUMENTED AS SHOWN:

BENCHMARK

THE SOUTHWESTERLY CORNER OF LOT 1 WOODMEN HILLS FILING NO. 4. MONUMENTED BY A YELLOW PLASTIC SURVEYORS CAP ON A NO. 4 REBAR LS# 24954 ELEVATION = 6947.67

CAUTION - NOTICE TO CONTRACTOR

1. ALL UTILITY LOCATIONS SHOWN ARE BASED ON MAPS PROVIDED BY THE APPROPRIATE UTILITY COMPANY AND FIELD SURFACE EVIDENCE AT THE TIME OF SURVEY AND IS TO BE CONSIDERED AN APPROXIMATE LOCATION ONLY. IT IS THE CONTRACTOR'S RESPONSIBILITY TO FIELD VERIFY THE FIELD LOCATION OF ALL UTILITIES, PUBLIC OR PRIVATE, WHETHER SHOWN ON THE PLANS OR NOT, PRIOR TO CONSTRUCTION. REPORT ANY DISCREPANCIES TO THE ENGINEEER PRIOR TO CONSTRUCTION.
2. WHERE A PROPOSED UTILITY CROSSES AN EXISTING UTILITY, IT IS THE CONTRACTOR'S RESPONSIBILITY TO FIELD VERIFY THE HORIZONTAL AND VERTICAL LOCATION OF SUCH EXISTING UTILITY, EITHER THROUGH POTHOLING OR ALTERNATIVE METHOD. REPORT INFORMATION TO THE ENGINEER PRIOR TO CONSTRUCTION.

811
Know what's **below.**
Call before you dig.

Galloway
1155 Kelly Johnson Blvd., Suite 305
Colorado Springs, CO 80920
719.900.7220
GallowayUS.com

COLORADO LICENSED RONALD GRANT DEMS PE 0051822 PROFESSIONAL ENGINEER
04/07/2021

COPYRIGHT
THESE PLANS ARE AN INSTRUMENT OF SERVICE AND ARE THE PROPERTY OF GALLOWAY, AND MAY NOT BE DUPLICATED, DISCLOSED, OR REPRODUCED WITHOUT THE WRITTEN CONSENT OF GALLOWAY. COPYRIGHTS AND INFRINGEMENTS WILL BE ENFORCED AND PROSECUTED.

CHALLENGER HOMES

WATER & WASTEWATER CONSTRUCTION PLANS FALCON MEADOWS AT BENT GRASS FILING NO. 1

FOR
CHALLENGER COMMUNITIES, LLC

BENT GRASS MEADOWS DRIVE & MERDIAN ROAD
FALCON, CO 80831 - EL PASO COUNTY

#	Date	Issue / Description	Init.

Project No:	CLH000018
Drawn By:	CMWJ
Checked By:	RGD
Date:	03/26/2021

WASTEWATER PLAN & PROFILE

U2.5

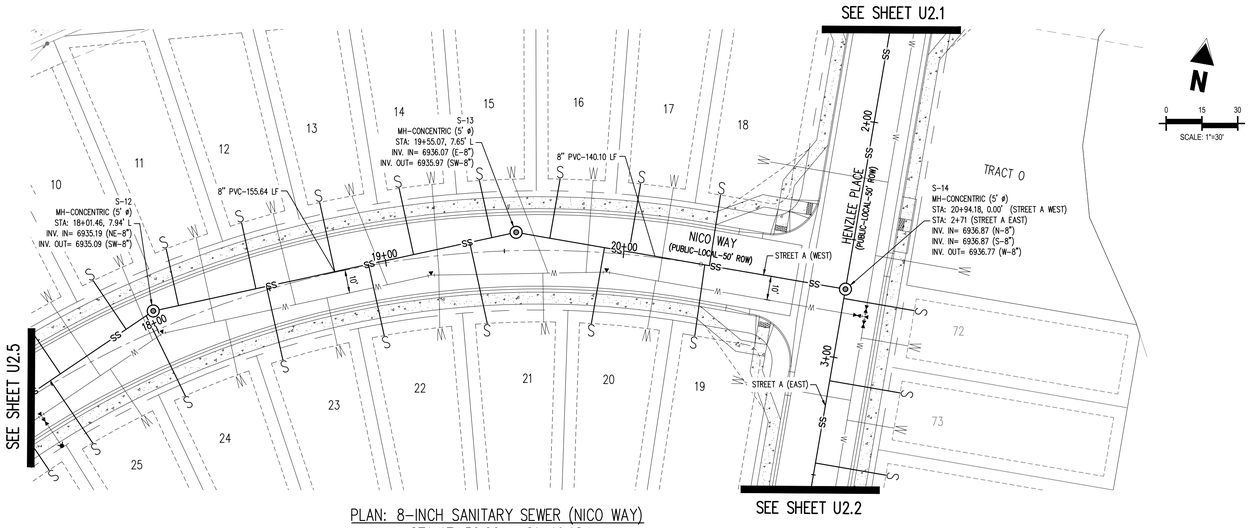

PLAN: 8-INCH SANITARY SEWER (NICO WAY)
STA:17+50.00 – 21+19.18

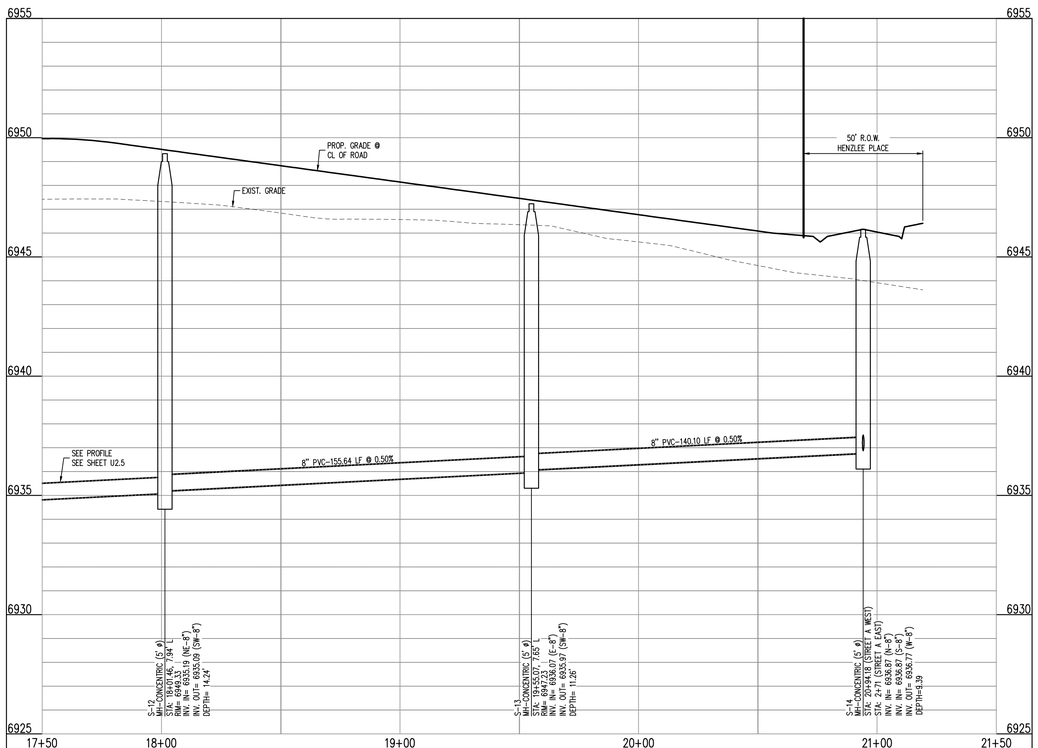

STREET A WEST
STA: 17+50 – 21+50
SCALE: H: 1"=30' V: 1"=10'

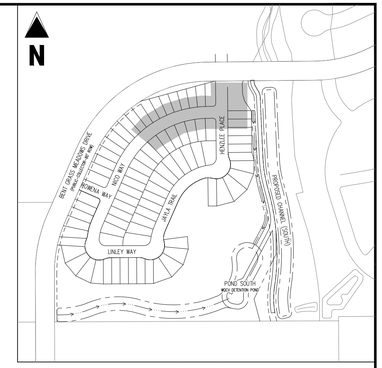

KEY MAP
SCALE: 1"=300'

LEGEND

- EXISTING PROPERTY LINE
- EXISTING PROPERTY LINE TO BE REMOVED
- PROPOSED RIGHT OF WAY LINE
- EXISTING LOT LINE
- PROPOSED LOT LINE
- EXISTING EASEMENT
- PROPOSED EASEMENT
- EXISTING SUBDIVISION BUFFER
- EXISTING STORM DRAIN PIPE
- PROPOSED STORM DRAIN PIPE
- EXISTING WATER LINE
- PROPOSED WATER LINE
- EXISTING SANITARY SEWER LINE
- PROPOSED SANITARY SEWER LINE
- EXISTING DRAINAGE FEATURE OUTLINE
- PROPOSED DRAINAGE FEATURE OUTLINE
- EXISTING SWALE WITH FLOW DIRECTION
- PROPOSED SWALE WITH FLOW DIRECTION
- 100-YEAR FEMA FLOODPLAIN
- PROPOSED CDOT CLASS 6 GRAVEL
- PROPOSED RIP RAP
- EXISTING CONCRETE PAVING
- EXISTING CDOT CLASS 6 GRAVEL
- EXISTING 1" TO 2" CRUSHED ROCK
- EXISTING RIP RAP
- EXISTING GROUTED BOULDERS
- PROPOSED LOT #
- EXISTING LOT # (BENT GRASS FILING NO. 2)
- PROPOSED ADA RAMP
- PROPOSED FIRE HYDRANT
- PROPOSED GATE VALVE
- PROPOSED REDUCER
- PROPOSED WATER BEND/TEE
- PROPOSED SANITARY MANHOLE
- PROPOSED FES
- PROPOSED STORM MANHOLE
- PROPOSED CDOT TYPE R STORM INLET

NOTES

1. ALL STATION CALLOUTS ARE TO THE CENTERLINE OF ROADWAY, THEREFORE MANHOLE RIMS MAY APPEAR TO NOT MEET FINISH GRADE
2. CONTRACTOR TO READ AND BECOME FAMILIAR WITH THE WOODMEN HILLS METROPOLITAN DISTRICT WATER AND WASTEWATER SYSTEM STANDARD SPECIFICATIONS CRITERIA MANUAL AND DETAILS PRIOR TO BEGINNING CONSTRUCTION.

BASIS OF BEARINGS

ALL BEARINGS ARE GRID BEARINGS OF THE COLORADO STATE PLANE COORDINATE SYSTEM, CENTRAL ZONE, NORTH AMERICAN DATUM 1983. THE BEARING OF THE LINE BETWEEN THE SOUTHWEST CORNER OF SECTION 1, T13S, R65W AND THE WEST QUARTER CORNER SECTION 1, T13S, R65W IS N00°13'46"W AND MONUMENTED AS SHOWN:

BENCHMARK

THE SOUTHWESTERLY CORNER OF LOT 1 WOODMEN HILLS FILING NO. 4, MONUMENTED BY A YELLOW PLASTIC SURVEYORS CAP ON A NO. 4 REBAR LS# 24954 ELEVATION = 6947.67

CAUTION – NOTICE TO CONTRACTOR

1. ALL UTILITY LOCATIONS SHOWN ARE BASED ON MAPS PROVIDED BY THE APPROPRIATE UTILITY COMPANY AND FIELD SURFACE EVIDENCE AT THE TIME OF SURVEY AND IS TO BE CONSIDERED AN APPROXIMATE LOCATION ONLY. IT IS THE CONTRACTOR'S RESPONSIBILITY TO FIELD VERIFY THE FIELD LOCATION OF ALL UTILITIES, PUBLIC OR PRIVATE, WHETHER SHOWN ON THE PLANS OR NOT, PRIOR TO CONSTRUCTION. REPORT ANY DISCREPANCIES TO THE ENGINEEER PRIOR TO CONSTRUCTION.
2. WHERE A PROPOSED UTILITY CROSSES AN EXISTING UTILITY, IT IS THE CONTRACTOR'S RESPONSIBILITY TO FIELD VERIFY THE HORIZONTAL AND VERTICAL LOCATION OF SUCH EXISTING UTILITY, EITHER THROUGH POTHOLING OR ALTERNATIVE METHOD. REPORT INFORMATION TO THE ENGINEER PRIOR TO CONSTRUCTION.

811 Know what's **below.** **Call** before you dig.

Galloway
1155 Kelly Johnson Blvd., Suite 305
Colorado Springs, CO 80920
719.900.7220
GallowayUS.com

COLORADO LICENSED
RYAN G. DELONG
PROFESSIONAL ENGINEER
04/07/2021

COPYRIGHT
THESE PLANS ARE AN INSTRUMENT OF SERVICE AND ARE THE PROPERTY OF GALLOWAY, AND MAY NOT BE DUPLICATED, DISCLOSED, OR REPRODUCED WITHOUT THE WRITTEN CONSENT OF GALLOWAY. COPYRIGHTS AND INFRINGEMENTS WILL BE ENFORCED AND PROSECUTED.

CHALLENGER HOMES

WATER & WASTEWATER CONSTRUCTION PLANS
FALCON MEADOWS AT BENT GRASS FILING NO. 1
FOR
CHALLENGER COMMUNITIES, LLC

BENT GRASS MEADOWS DRIVE & MERDIAN ROAD
FALCON, CO 80831 - EL PASO COUNTY

#	Date	Issue / Description	Init.

Project No:	CLH000018
Drawn By:	CMWJ
Checked By:	RGD
Date:	03/26/2021

WASTEWATER PLAN & PROFILE

U2.6
Sheet 16 of 21

M:\Challenger Homes Inc\CO\...\Bent Grass Filing 1\CAD\CIVIL\CLH018_BG1_Sanitary Sewer P&P.dwg, Caleb Johnson, 3/26/2021

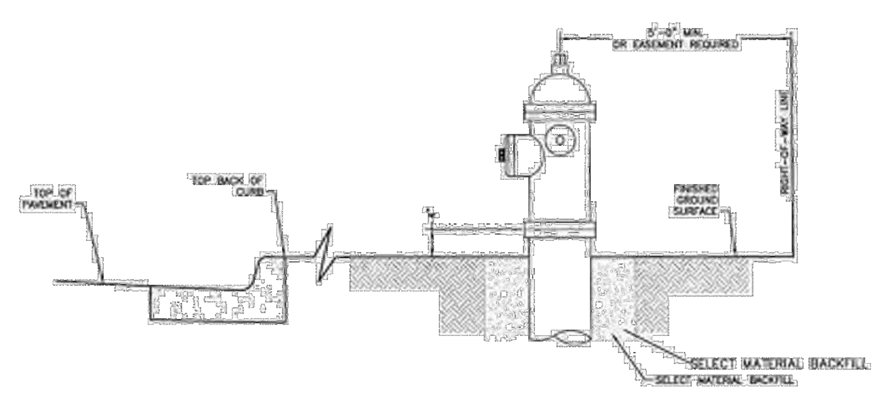

GENERAL NOTES:

1. HYDRANT NOZZLE SHALL BE POSITIONED AT RIGHT ANGLES TO THE CURB. IF NO CURB OR SIDEWALK EXISTS, NOZZLE SHALL BE PLACED AT RIGHT ANGLES TO STREET OR ALLEY.
2. HYDRANTS INSTALLED AT FLAG LOT LINES SHALL BE OFFSET 3' FROM THE LOT LINE (AWAY FROM STEM).
3. HYDRANTS WILL BE PLACED A MINIMUM OF 5.0 FT. FROM ANY UTILITY OR DRAINAGE STRUCTURE.
4. EASEMENTS MUST BE PROVIDED FOR ANY PUBLIC HYDRANT WHICH IS CLOSER THAN 5.0 FT TO THE RIGHT-OF-WAY LINE.
5. ANY HYDRANTS BEING INSTALLED WITH CONDITIONS OTHER THAN THOSE MENTIONED AND/OR DETAILED BELOW WILL BE REQUIRE SIGNED APPROVAL FROM THE DISTRICT AND THE FIRE DEPARTMENT.

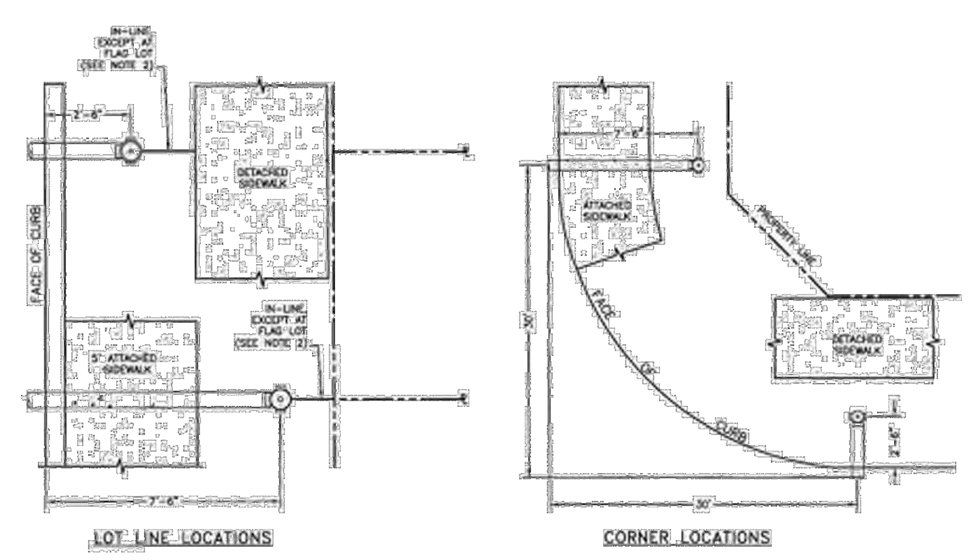

FIRE HYDRANT LOCATIONS

Drawn: DGM Date: JAN 2011 Scale: N.T.S.	Revised: Revised: Revised:	WOODMEN HILLS METROPOLITAN DISTRICT	WATER & WASTEWATER SYSTEM STANDARD SPECIFICATIONS	W-1

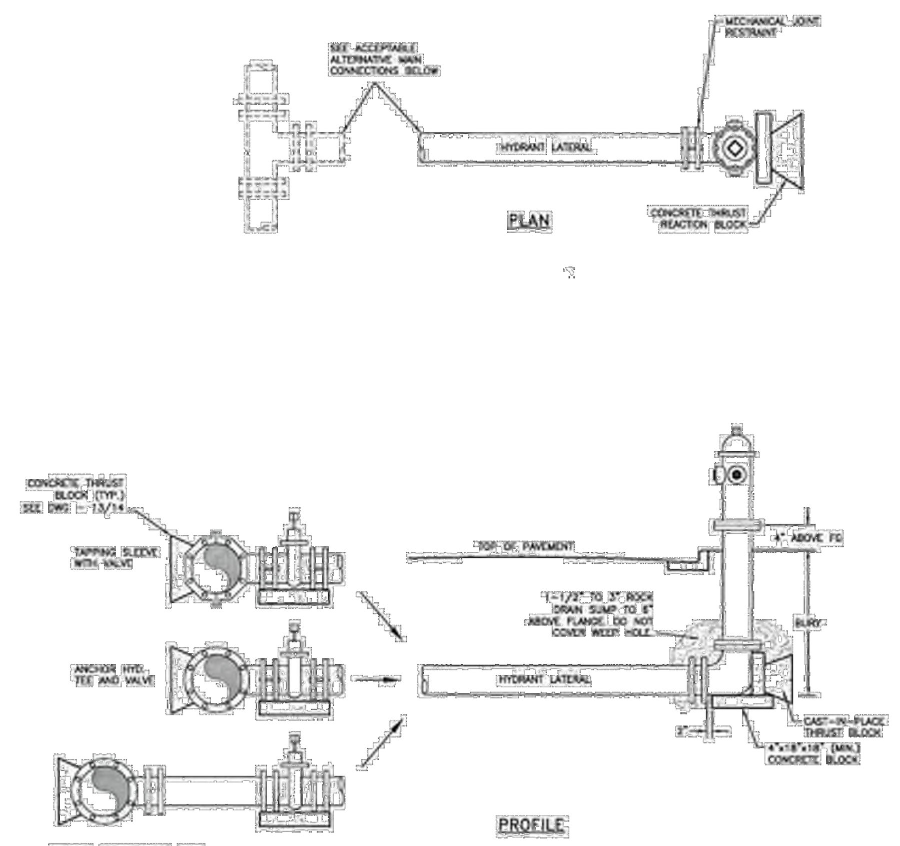

FIRE HYDRANT INSTALLATION

Drawn: DGM Date: JAN 2011 Scale: N.T.S.	Revised: Revised: Revised:	WOODMEN HILLS METROPOLITAN DISTRICT	WATER & WASTEWATER SYSTEM STANDARD SPECIFICATIONS	W-2

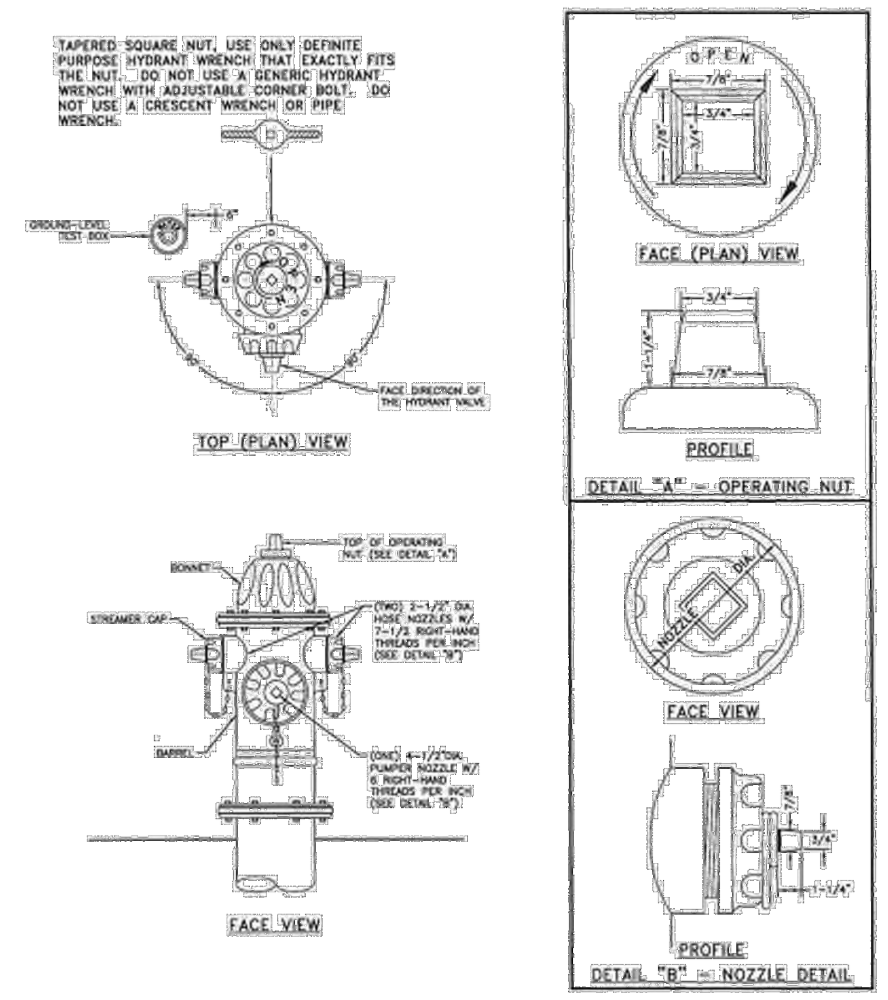

FIRE HYDRANT SPECIFICATIONS

Drawn: DGM Date: JAN 2011 Scale: N.T.S.	Revised: Revised: Revised:	WOODMEN HILLS METROPOLITAN DISTRICT	WATER & WASTEWATER SYSTEM STANDARD SPECIFICATIONS	W-3

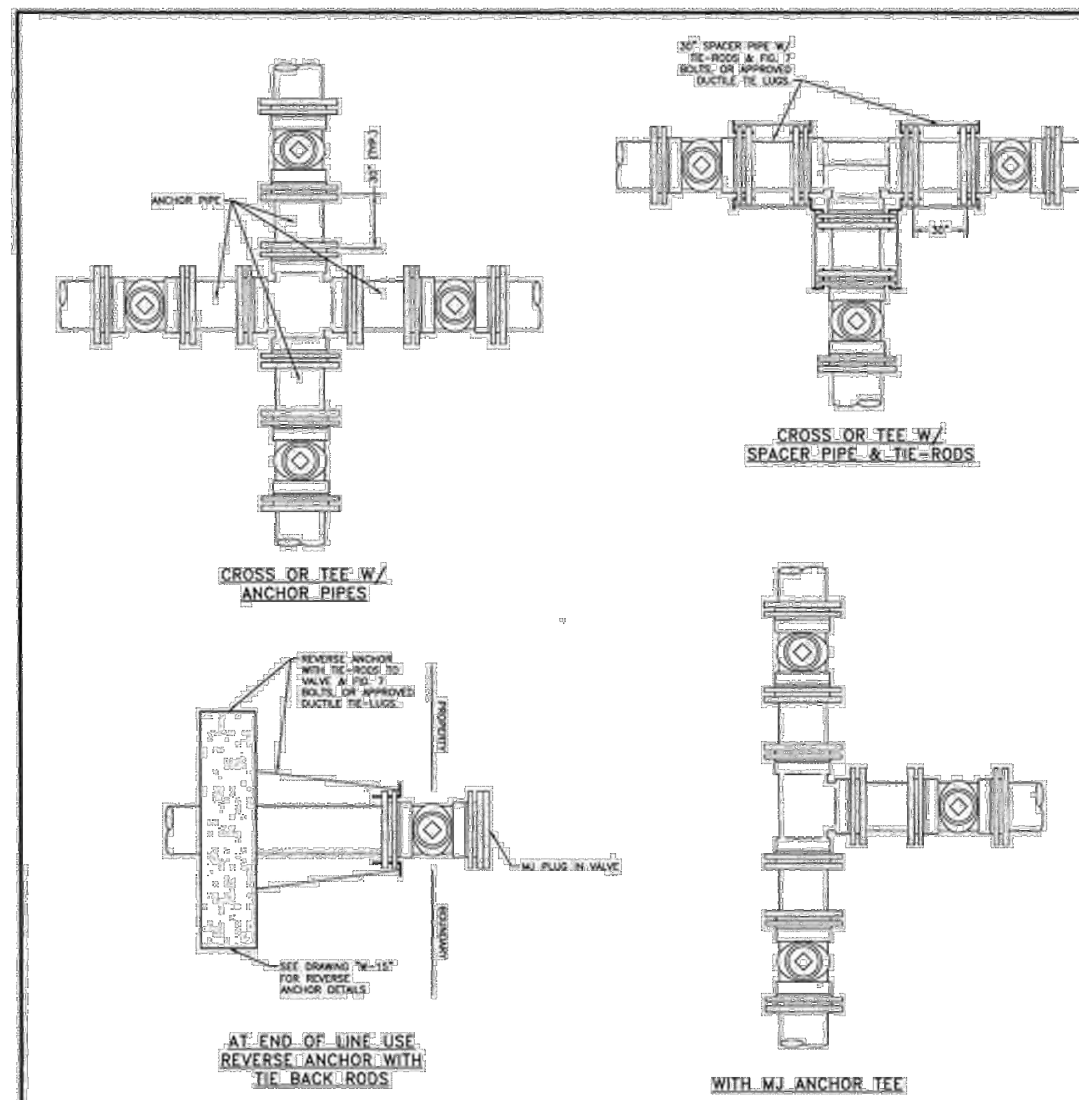

GENERAL NOTES:

1. ON ANY VALVE INSTALLATION NEAR A FITTING, THE VALVE SHALL BE ANCHORED BY RODS, REVERSE ANCHOR, AND MECHANICAL JOINT RESTRAINTS. 3/4" ALL-THREAD RODS SHALL BE USED WITH FIG. 7 BOLTS OR APPROVED DUCTILE TIE-LUGS FOR DEAD-END VALVES AND/OR PLUGS. ALL METALLIC COMPONENTS SHALL BE WRAPPED IN POLYETHYLENE TUBING.
2. ANCHOR PIPE OR FOSTER COUPLINGS MAY BE SUBSTITUTED FOR SPACER PIPE AND RODS.
3. THE CONCRETE REVERSE ANCHORS USED SHALL BE SIZED AS INDICATED ON DRAWING "W-15".
4. SEE DRAWINGS "W-24" AND "W-25" FOR APPLICATION OF MECHANICAL JOINT RESTRAINTS.
5. SEE DRAWING "W-5" FOR VALVE BOX INSTALLATION.

VALVE INSTALLATION & LOCATION

Drawn: DGM Date: JAN 2011 Scale: N.T.S.	Revised: Revised: Revised:	WOODMEN HILLS METROPOLITAN DISTRICT	WATER & WASTEWATER SYSTEM STANDARD SPECIFICATIONS	W-4

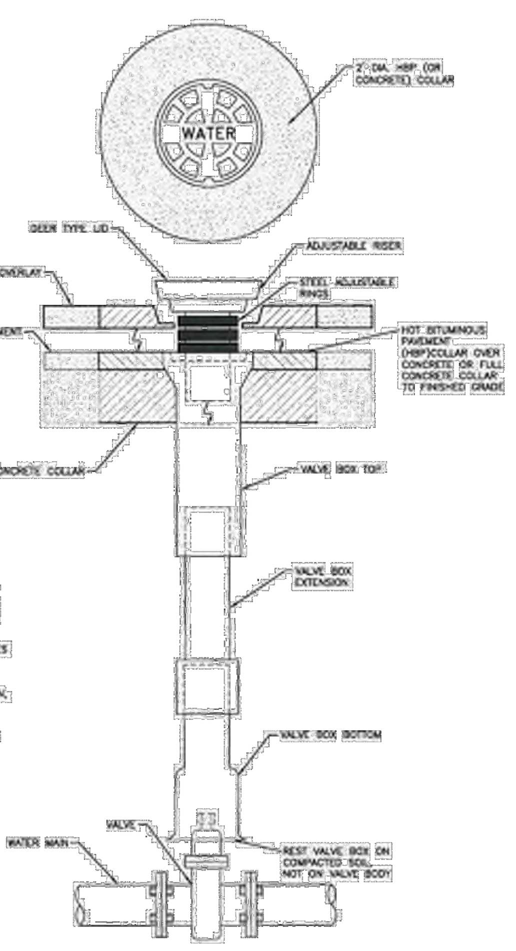

NOTES:

1. SLIP-TYPE 5-1/4" I.D. SHAFT TYLER PIPE SERIES 664-A OR EQUIVALENT APPROVED BY THE DISTRICT.
2. MAIN AND FIRE HYDRANT VALVES AND VALVE BOXES SHALL BE LOCATED IN AND UNDER THE DRIVING SURFACE OF THE STREET, NOT IN THE CURB PAN, CURB, OR BEHIND THE CURB.
3. SEE DRAWING "W-9" FOR TRACER WIRE INSTALLATION AT VALVE BOXES.

VALVE BOX INSTALLATION

Drawn: DGM Date: JAN 2011 Scale: N.T.S.	Revised: Revised: Revised:	WOODMEN HILLS METROPOLITAN DISTRICT	WATER & WASTEWATER SYSTEM STANDARD SPECIFICATIONS	W-5

FIELD INSTALLATION OF POLYETHYLENE WRAP

STEP 1:
PLACE TUBE OF POLYETHYLENE MATERIAL ON PIPE PRIOR TO LOWERING IT INTO TRENCH.

STEP 2:
PULL TUBE OVER THE LENGTH OF THE PIPE. TAPE TUBE TO END AT JOINT. FOLD MATERIAL AROUND THE ADJACENT SPIGOT END AND WRAP WITH TAPE TO HOLD THE PLASTIC TUBE IN PLACE. INSTALL BONDING STRAP OR WIRE AT EVERY JOINT OF PIPE PRIOR TO WRAPPING AS PER SECTION 6.02(d) OF THE STANDARD SPECIFICATIONS.

STEP 3:
OVERLAP FIRST TUBE WITH ADJACENT TUBE AND SECURE WITH PLASTIC ADHESIVE TAPE. THE POLYETHYLENE TUBE MATERIAL COVERING THE PIPE SHALL BE LOOSE. EXCESS MATERIAL SHALL BE NEATLY DRAWN UP AROUND THE PIPE BARREL, FOLDED ON TOP OF PIPE AND TAPED IN PLACE.

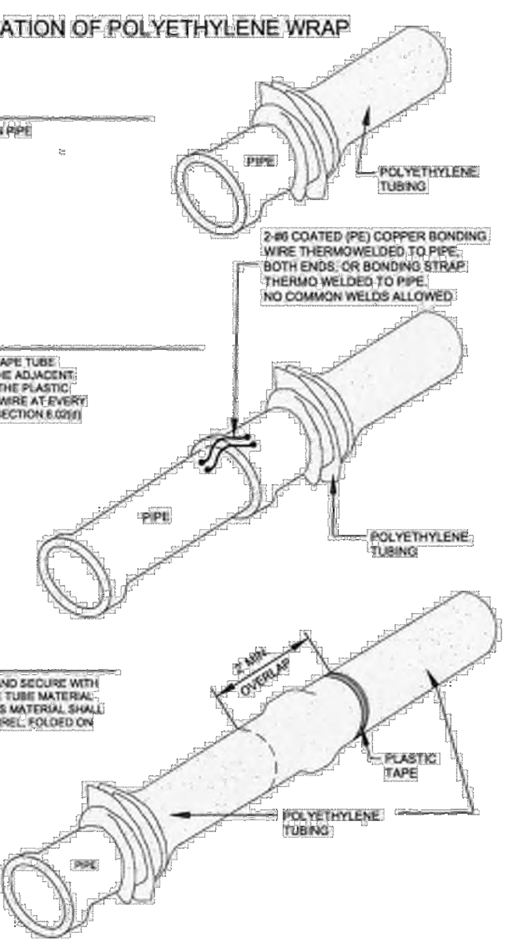

POLYETHYLENE WRAP

Drawn: DGM Date: JAN 2011 Scale: N.T.S.	Revised: Revised: Revised:	WOODMEN HILLS METROPOLITAN DISTRICT	WATER & WASTEWATER SYSTEM STANDARD SPECIFICATIONS	W-6

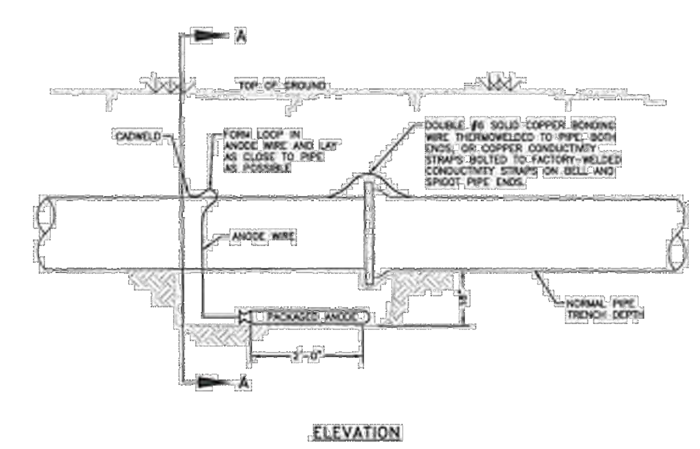

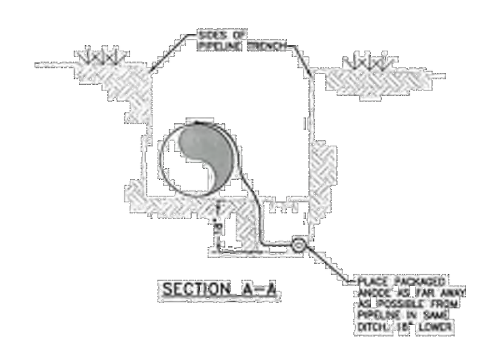

NOTES:

1. CADWELD CONNECTION TO BE PRIMED AND COATED CAREFULLY. PACKAGED ANODE SHOULD BE COVERED WITH FINE SOIL CONTAINING NO ROCKS OR DIRT CLUMPS, TAMPED.
2. WHEN ANODES ARE REQUIRED WITH METAL FITTINGS AND APPURTENANCES TOGETHER WITH PVC PIPE INSTALLATION, THE ANODES SHALL BE PLACED AND ATTACHED TO THE METAL IN SAME MANNER AS SHOWN ON THIS DRAWING. 9LB. ANODES CAN BE USED ON METAL FITTINGS 12" AND LESS IN DIAMETER AND 17LB. ANODES FOR METAL FITTINGS GREATER THAN 12" DIAMETER WHEN USING PVC PIPE.
3. PACKAGED ANODE TO BE WETTED AND COVERED WITH SOIL PRIOR TO BACKFILLING.

BONDING JOINT & ANODE INSTALLATION

Drawn: DGM Date: JAN 2011 Scale: N.T.S.	Revised: Revised: Revised:	WOODMEN HILLS METROPOLITAN DISTRICT	WATER & WASTEWATER SYSTEM STANDARD SPECIFICATIONS	W-7

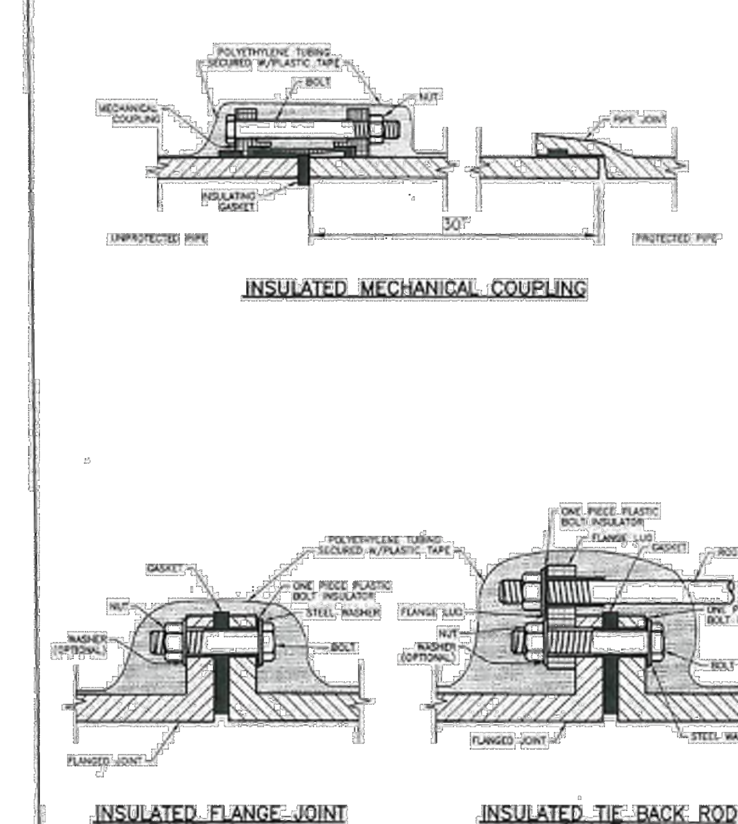

NOTE:
TEST WIRES TO BE USED WHEN REQUIRED

INSULATOR INSTALLATION

Drawn: DGM Date: JAN 2011 Scale: N.T.S.	Revised: Revised: Revised:	WOODMEN HILLS METROPOLITAN DISTRICT	WATER & WASTEWATER SYSTEM STANDARD SPECIFICATIONS	W-8

Galloway
1155 Kelly Johnson Blvd., Suite 305
Colorado Springs, CO 80920
719.900.7220
GallowayUS.com

COLORADO LICENSED PROFESSIONAL ENGINEER RONALD GRANT PE 0051822
04/07/2021

COPYRIGHT
THESE PLANS ARE AN INSTRUMENT OF SERVICE AND ARE THE PROPERTY OF GALLOWAY, AND MAY NOT BE DUPLICATED, DISCLOSED, OR REPRODUCED WITHOUT THE WRITTEN CONSENT OF GALLOWAY. COPYRIGHTS AND INFRINGEMENTS WILL BE ENFORCED AND PROSECUTED.

CHALLENGER HOMES

WATER & WASTEWATER CONSTRUCTION PLANS
FALCON MEADOWS AT BENT GRASS FILING NO. 1
FOR
CHALLENGER COMMUNTIES, LLC

BENT GRASS MEADOWS DRIVE & MERDIAN ROAD
FALCON, CO 80831 - EL PASO COUNTY

#	Date	Issue / Description	Init.

Project No:	CLH000018
Drawn By:	CMWJ
Checked By:	RGD
Date:	03/26/2021

WATER DETAIL SHEET 1

U3.1

H:\Challenger Homes Inc\CO, El Paso County-CLH000018-Bent Grass Filing 3\CADD\3-CD\UTIL\CLH18_U3.1-Details.dwg - Caleb Johnson - 3/26/2021

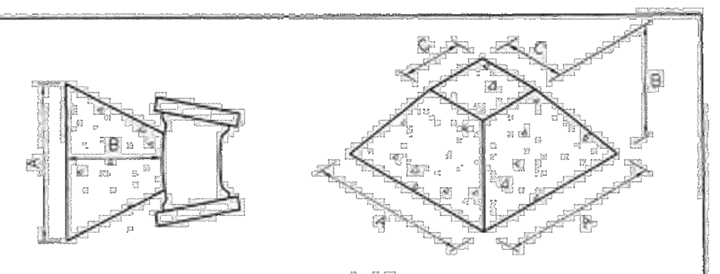

NOTE: USE THE FOLLOWING VALUES FOR "C"

PIPE SIZE	C
12" & UNDER	1'-6"
16" TO 24"	2'-0"
30" TO 36"	3'-0"
OVER 36"	A, B & C WILL BE GIVEN IN EACH INSTANCE

VOL. (yds)	A	B-V C=1'-6"	B-V C=2'-0"	B-V C=3'-0"
1/8	2'-6"	0'-10"	[illegible]	[illegible]
1/4	2'-8"	1'-7"	[illegible]	[illegible]
1/2	3'-2"	2'-5"	2'-0"	[illegible]
3/4	4'-0"	2'-6"	2'-2"	[illegible]
1	4'-4"	3'-0"	2'-7"	2'-0"
1 1/4	4'-10"	3'-1"	2'-9"	2'-2"
1 1/2	5'-3"	3'-3"	2'-11"	2'-4"
1 3/4	5'-7"	3'-5"	3'-1"	2'-6"
2	5'-10"	3'-7"	3'-3"	2'-8"
2 1/4	6'-3"	3'-8"	3'-4"	2'-9"
2 1/2	6'-4"	3'-11"	3'-7"	3'-0"
2 3/4	6'-6"	3'-11"	3'-7"	3'-0"
3	6'-10"	4'-1"	3'-9"	3'-2"
3 1/4	7'-3"	4'-1"	3'-9"	3'-2"
3 1/2	7'-4"	4'-3"	3'-11"	3'-4"
3 3/4	7'-7"	4'-4"	4'-0"	3'-5"
4	7'-11"		4'-0"	3'-5"
4 1/4	8'-1"		4'-0"	3'-6"
4 1/2	8'-4"		4'-0"	3'-6"
4 3/4	8'-6"		4'-1"	3'-7"

VOL. (yds)	A	B-V C=1'-6"	B-V C=2'-0"	B-V C=3'-0"
5	8'-8"		4'-2"	3'-8"
5 1/4	8'-11"		4'-2"	3'-8"
5 1/2	9'-1"		4'-3"	3'-9"
5 3/4	9'-3"		4'-4"	3'-10"
6	9'-4"		4'-5"	3'-11"
6 1/4	9'-6"		4'-6"	4'-0"
6 1/2	9'-8"		4'-6"	4'-0"
6 3/4	9'-11"		4'-6"	4'-0"
7	10'-2"		4'-6"	4'-0"
7 1/4	10'-3"		4'-7"	4'-1"
7 1/2	10'-4"		4'-8"	4'-2"
7 3/4	10'-6"		4'-9"	4'-3"
8	10'-6"		4'-10"	4'-4"
8 1/4	10'-8"		4'-10"	4'-4"
8 1/2	10'-9"		4'-11"	4'-5"
8 3/4	10'-11"		4'-11"	4'-5"
9	11'-1"		4'-11"	4'-5"
9 1/4	11'-2"		5'-0"	4'-6"
9 1/2	11'-4"		5'-0"	4'-6"
9 3/4	11'-6"		5'-0"	4'-6"
10	11'-8"		5'-0"	4'-6"

ALL WATER MAINS GREATER THAN 12 INCHES IN DIAMETER SHALL HAVE THRUST BLOCK DESIGNED & SHOWN ON THE CONSTRUCTION DOCUMENTS.

SEE VOLUMES ABOVE FOR A, B & C DIM.

FITTING	4"	6"	8"	12"
TEE	1/8 yd.	1/2 yd.	3/4 yd.	2 yd.
90° BEND	1/8 yd.	3/4 yd.	1 1/2 yd.	3 yd.
45° BEND	1/8 yd.	1/2 yd.	3/4 yd.	1 1/2 yd.
22-1/2° BEND	1/8 yd.	1/8 yd.	1/4 yd.	3/4 yd.
11-1/4° BEND	1/8 yd.	1/8 yd.	1/8 yd.	1/2 yd.

THRUST BLOCK DATA

Drawn: GGM | Date: JAN 2011 | Scale: N.T.S. | Revised: | Revised: | Revised:
WOODMEN HILLS METROPOLITAN DISTRICT — WATER & WASTEWATER SYSTEM STANDARD SPECIFICATIONS — W-10

CONCRETE THRUST BLOCKS

WATER MAIN AND TAP SIZE COMBINATIONS WHICH REQUIRE A CONCRETE THRUST REACTION BLOCK BEHIND THE MAIN AT THE TAPPING SLEEVE OR SADDLE.

ALL WATER MAINS

INDICATES CONCRETE THRUST BLOCK REQUIRED

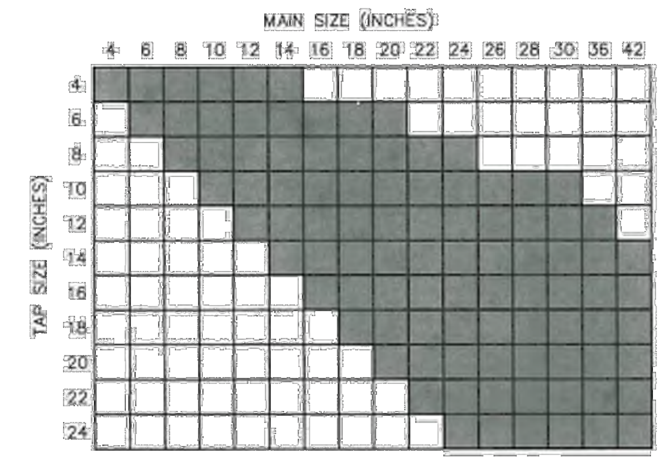

ANY THRUST REACTION BLOCK REQUIREMENTS FOR WATER MAIN AND TAP SIZE COMBINATIONS OTHER THAN THOSE SHOWN ABOVE WILL REQUIRE SPECIAL DESIGN APPROVAL BY THE DISTRICT.

THRUST BLOCKS REQUIRED FOR TAPS

Drawn: GGM | Date: JAN 2011 | Scale: N.T.S. | Revised: | Revised: | Revised:
WOODMEN HILLS METROPOLITAN DISTRICT — WATER & WASTEWATER SYSTEM STANDARD SPECIFICATIONS — W-11

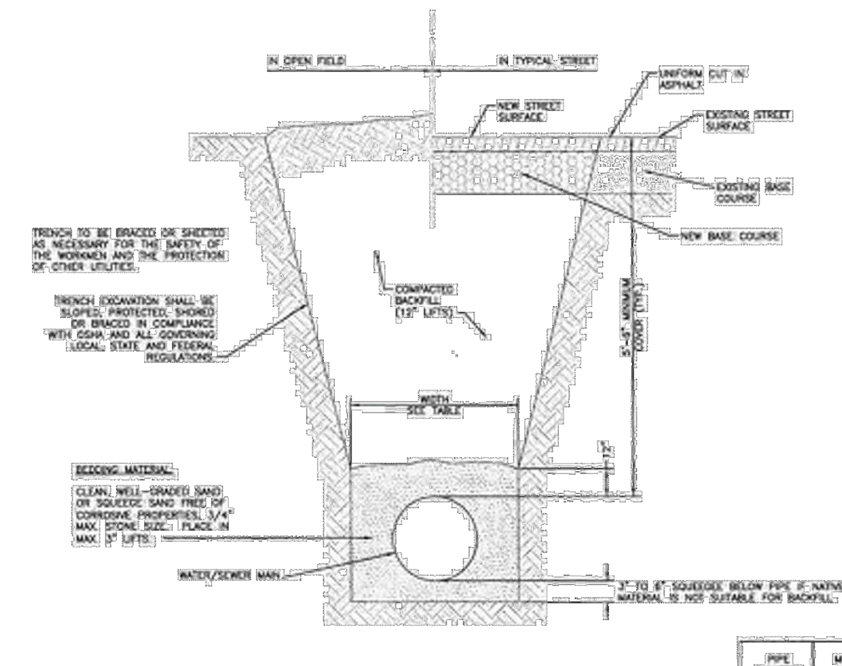

TYPICAL TRENCH SECTION
SCALE: N.T.S.

PIPE DIAMETER	MINIMUM WIDTH	MAXIMUM WIDTH
4"	2'-2"	3'-0"
6"	2'-2"	3'-0"
8"	2'-2"	3'-0"
10"	2'-4"	3'-0"
12"	2'-6"	3'-6"
18"	2'-10"	3'-9"
24"	3'-2"	4'-3"

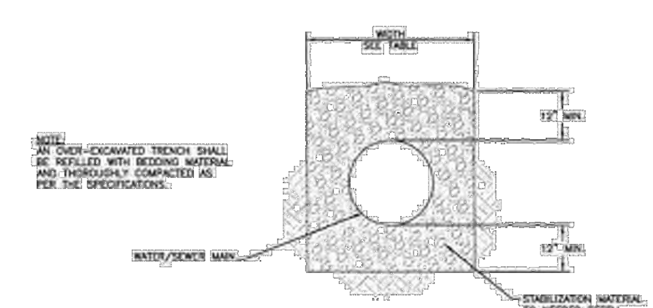

UNSTABLE TRENCH BEDDING DETAIL
SCALE: N.T.S.

TYPICAL TRENCH CROSS-SECTION

Drawn: GGM | Date: JAN 2011 | Scale: N.T.S. | Revised: | Revised: | Revised:
WOODMEN HILLS METROPOLITAN DISTRICT — WATER & WASTEWATER SYSTEM STANDARD SPECIFICATIONS — W-12

MAXIMUM DEFLECTION
PER SLIP JOINT OF D.I.P.

PIPE DIAMETER I.D. (IN)	PIPE DIAMETER O.D. (IN)	PIPE DIAMETER O.D. (FT)	MFRS. DEFL.	DESIGN DEFLECTION (80% MAX.)	MAX. DEFL. DIST. (1)	MAX. DEFL. DIST. (2)	APPROX. RADIUS FOR DEFLECTING CURVES WITHOUT BENDS 20'L	APPROX. RADIUS FOR DEFLECTING CURVES WITHOUT BENDS 18'L
4"	4.80"	.400'	5°00'00"	4°00'00"	16"	15"	286'	258'
6"	6.90"	.575'	5°00'00"	4°00'00"	16"	15"	286'	258'
8"	9.05"	.754'	5°00'00"	4°00'00"	16"	15"	286'	258'
10"	11.10"	.925'	5°00'00"	4°00'00"	16"	15"	286'	258'
12"	13.20"	1.100'	5°00'00"	4°00'00"	16"	15"	286'	258'
14"	15.30"	1.275'	3°00'00"	2°24'00"	10"	9"	477'	430'
16"	17.40"	1.450'	3°00'00"	2°24'00"	10"	9"	477'	430'
18"	19.50"	1.625'	3°00'00"	2°24'00"	10"	9"	477'	430'
20"	21.60"	1.800'	3°00'00"	2°24'00"	10"	9"	477'	430'
24"	25.80"	2.150'	3°00'00"	2°24'00"	10"	9"	477'	430'
30"	32.00"	2.666'	2°30'00"	2°00'00"	8"	7"	573'	516'
36"	38.30"	3.192'	2°00'00"	1°36'00"	6"	6"	716'	645'
42"	44.50"	3.708'	2°00'00"	1°36'00"	6"	6"	716'	645'

(1) 20'L = NORMAL 20-FOOT JOINT LAYING LENGTH
(2) = NORMAL 18-FOOT JOINT LAYING LENGTH

MAXIMUM PIPELINE DEFLECTION DATA

Drawn: GGM | Date: JAN 2011 | Scale: N.T.S. | Revised: | Revised: | Revised:
WOODMEN HILLS METROPOLITAN DISTRICT — WATER & WASTEWATER SYSTEM STANDARD SPECIFICATIONS — W-13

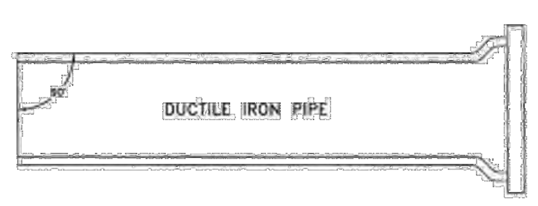

MECHANICAL JOINT CONNECTION

PIPE MUST BE CUT AT RIGHT ANGLES TO LONGITUDINAL CENTERLINE IN ALL CASES.

PIPE ENDS SHALL BE FREE OF BURRS.

MORTAR LINING SHALL BE FLUSH WITH PIPE END.

GOUGES CUT IN PIPE ENDS SHALL NOT BE ALLOWED.

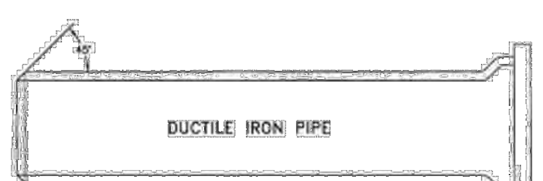

SLIP JOINT CONNECTION

PIPE CUT IN STRAIGHT LINE AND BEVELED AT 45° ANGLE ON END.

GENERAL NOTES:

1. ALL PIPE CUTTING EQUIPMENT AND PIPE CUTS MUST BE APPROVED BY THE WATER AND SANITATION DISTRICT INSPECTOR.
2. ALL PIPE ENDS TO BE USED IN INSTALLATION SHALL BE DRESSED SMOOTH TO THE SATISFACTION OF THE INSPECTOR PRIOR TO INSTALLATION.
3. AT THE REQUEST OF THE CONTRACTOR MAKING THE INSTALLATION, THE DISTRICT WILL MAKE PIPE CUTS, PROVIDING THE CURRENT FEE PER CUT IS PAID AND 24-HOUR NOTICE IS GIVEN (THE CURRENT FEE IS SUBJECT TO CHANGE.)
4. ALL DIP DELIVERED TO JOB SITE MUST BE NEW MATERIAL.

PIPE CUTTING

Drawn: GGM | Date: JAN 2011 | Scale: N.T.S. | Revised: | Revised: | Revised:
WOODMEN HILLS METROPOLITAN DISTRICT — WATER & WASTEWATER SYSTEM STANDARD SPECIFICATIONS — W-14

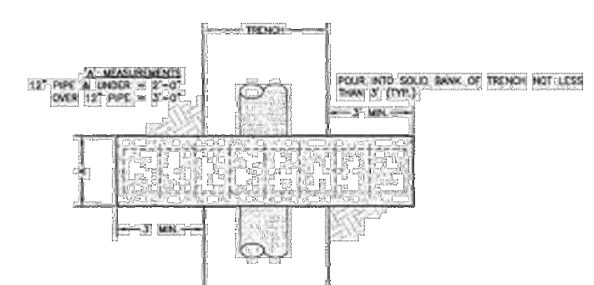

PLAN

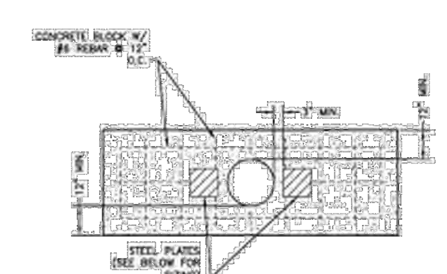

ELEVATION

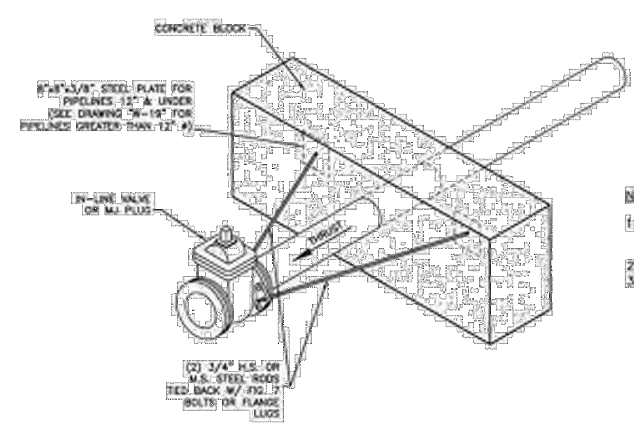

NOTES:

1. ALL METALLIC COMPONENTS TO BE ENCASED IN CONCRETE OR WRAPPED IN POLYETHYLENE TUBING.
2. MAX. ROD LENGTH = 12'
3. MIN. ROD LENGTH = 4'

REVERSE ANCHOR DETAIL

Drawn: GGM | Date: JAN 2011 | Scale: N.T.S. | Revised: | Revised: | Revised:
WOODMEN HILLS METROPOLITAN DISTRICT — WATER & WASTEWATER SYSTEM STANDARD SPECIFICATIONS — W-15

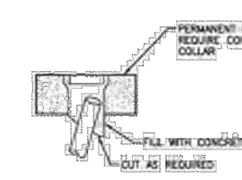

DETAIL "B"
N.T.S.

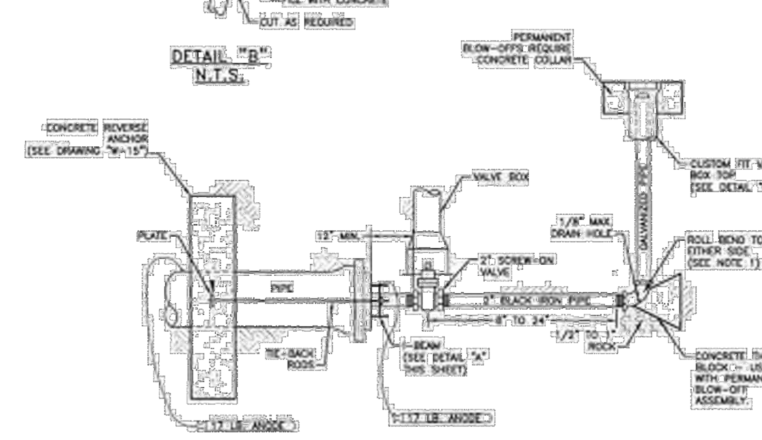

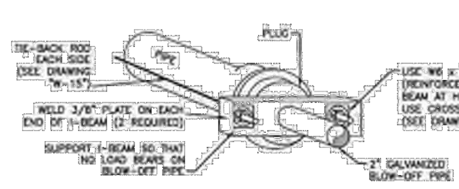

DETAIL "A"
N.T.S.

NOTES:

1. IF APPROPRIATE LOCATION FOR DISCHARGED WATER CANNOT BE REACHED BY ROLLING THE BEND, ADDITIONAL BENDS MAY BE REQUIRED BY THE INSPECTOR.
2. COAT TIE RODS, BEAM AND BLACK IRON PIPE WITH EPOXY POLYAMIDE COATING, 10 MILS MIN.
3. ENTIRE BLOW OFF ASSEMBLY MUST BE FULLY SUPPORTED, CONCRETE STEPPING STONES MAY BE REQUIRED.
4. PIPE DOPE APPROVED FOR USE IN POTABLE WATER SYSTEMS MUST BE USED ON ALL THREADED JOINTS.

TEMP & PERMANENT BLOW-OFF ASSEMBLIES FOR 6" & 8" MAINS

Drawn: GGM | Date: JAN 2011 | Scale: N.T.S. | Revised: | Revised: | Revised:
WOODMEN HILLS METROPOLITAN DISTRICT — WATER & WASTEWATER SYSTEM STANDARD SPECIFICATIONS — W-18

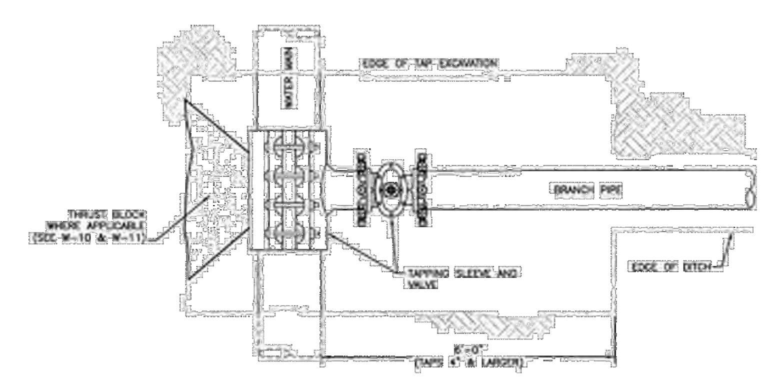

PLAN VIEW
N.T.S.

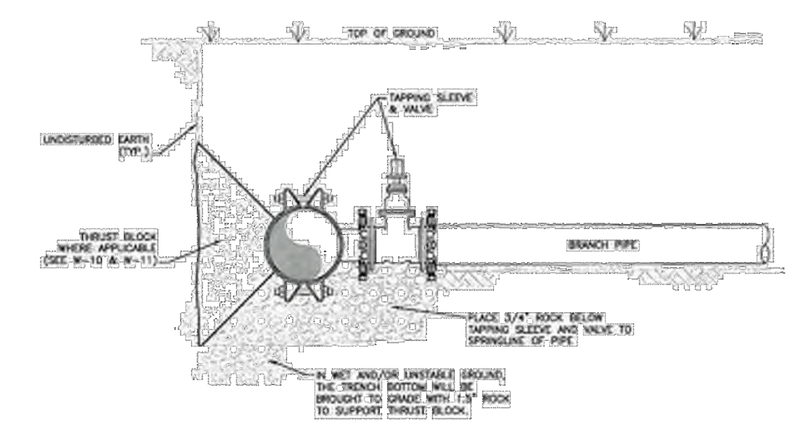

PROFILE VIEW
N.T.S.

PIPE TAPPING DETAIL

Drawn: GGM | Date: JAN 2011 | Scale: N.T.S. | Revised: | Revised: | Revised:
WOODMEN HILLS METROPOLITAN DISTRICT — WATER & WASTEWATER SYSTEM STANDARD SPECIFICATIONS — W-21

Galloway
1155 Kelly Johnson Blvd., Suite 305
Colorado Springs, CO 80920
719.900.7220
GallowayUS.com

COLORADO LICENSED RONALD GRANT D... PE 0051... PROFESSIONAL ENGINEER
04/07/2021

COPYRIGHT
THESE PLANS ARE AN INSTRUMENT OF SERVICE AND ARE THE PROPERTY OF GALLOWAY, AND MAY NOT BE DUPLICATED, DISCLOSED, OR REPRODUCED WITHOUT THE WRITTEN CONSENT OF GALLOWAY. COPYRIGHTS AND INFRINGEMENTS WILL BE ENFORCED AND PROSECUTED.

CHALLENGER HOMES

WATER & WASTEWATER CONSTRUCTION PLANS
FALCON MEADOWS AT BENT GRASS FILING NO. 1
FOR
CHALLENGER COMMUNTIES, LLC

BENT GRASS MEADOWS DRIVE & MERDIAN ROAD
FALCON, CO 80831 - EL PASO COUNTY

#	Date	Issue / Description	Init.

Project No:	CLH000018
Drawn By:	CMWJ
Checked By:	RGD
Date:	03/26/2021

WATER DETAIL SHEET 2

U3.2

H:\Challenger Homes Inc\CO, El Paso County-CLH000018-Bent Grass Filing 3\CADD\3-CD\UTIL\CLH18_U3.1-Details.dwg - Caleb Johnson - 3/26/2021

CUL-DE-SAC BLOW-OFF DETAIL (W-22)

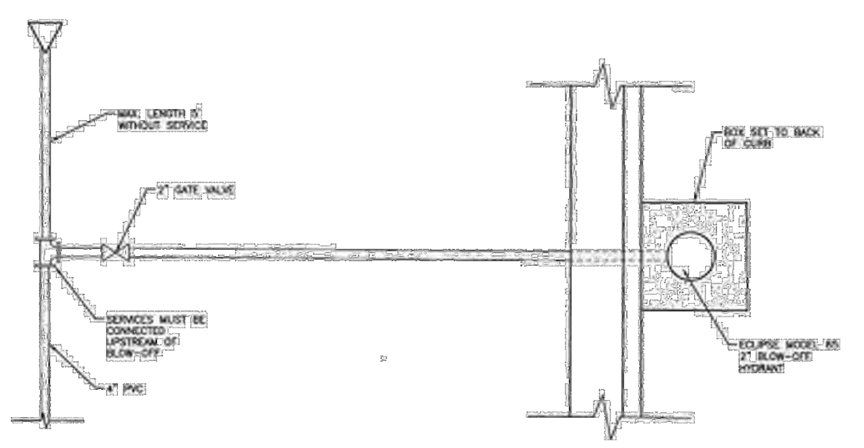

PLAN VIEW
N.T.S.

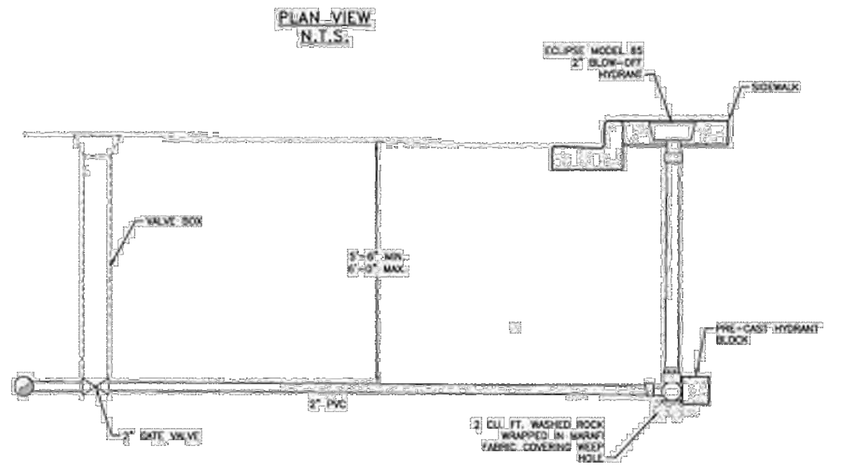

PROFILE VIEW
N.T.S.

CUL-DE-SAC BLOW-OFF DETAIL

Drawn: GGM	Revised:	WOODMEN HILLS METROPOLITAN DISTRICT	WATER & WASTEWATER SYSTEM STANDARD SPECIFICATIONS	W-22
Date: JAN 2011	Revised:			
Scale: N.T.S.	Revised:			

FLANGE – LUG DETAIL (W-23)

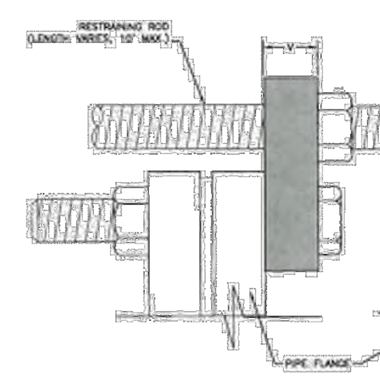

SIDE

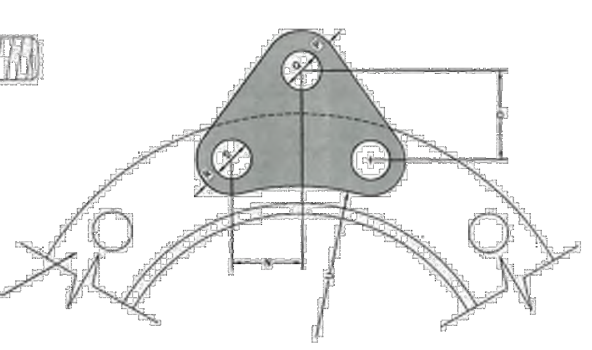

FACE

PIPE DIA. (IN.)	PRESS CLASS (PSI)	"N" (IN.)	"O" (IN.)	H.S. ROD "P" (IN.)	H.S. ROD "Q" (IN.)	H.S. ROD ROD DIA. (IN)	M.S. ROD "P" (IN.)	M.S. ROD "Q" (IN.)	M.S. ROD ROD DIA. (IN)	"R" (IN.)	"S" (IN.)	"U" (IN.)	"V" (IN.)	NO REQ'D (EA)
6	150	1-15/16	2-1/4	1	7/8	3/4	1	7/8	3/4	7/8	7/8	3-3/4	3/4	2
	300	1-3/8	2-3/4	1	1	7/8	1	1	7/8	7/8	7/8	4-7/16	1	
8	150	2-1/4	2-3/4	1	7/8	3/4	1	7/8	3/4	1	7/8	4-7/8	3/4	2
	300	1-11/16	2-7/8	1	1	7/8	1	1	7/8	1	1	5-1/2	1	
12	150	2-3/16	2-3/4	1-1/4	1-1/8	1	1-1/4	1-1/8	1	1-1/8	1	7-1/4	7/8	2
	300	1-3/4	3-3/4	1-3/8	1-1/4	1-1/2	1-3/8	1-3/8	1-1/4	1-1/4	1-1/8	7-5/8	1-1/4	
16	150	2-1/16	2-3/4	1-1/2	1-3/8	1-1/4	1-1/2	1-3/8	1-1/4	1-1/4	1-1/8	9-3/8	1-1/8	3
	300	1-3/4	4-1/4	1-1/2	1-1/2	1-3/8	1-1/2	1-1/2	1-3/8	1-1/2	1-3/8	9-7/8	1-1/2	
18	150	2-1/4	2-1/2		1-1/8	1		1-1/8	1		1-1/8	10	1-1/8	4
	300	1-7/8	3-3/4	1-1/2	1-1/2	1-1/2	1-1/2	1-1/2	1-1/2	1-1/2	1-3/8	10-3/16	2	4
20	150	2-5/8	1-15/16		1-1/8	1		1-1/8	1		1-1/4	11-1/8	1-1/4	4
	300	2	3-1/16	1-3/8	1-9/16	1-1/2	1-3/8	1-9/16	1-1/2	1-3/8	1-3/8	10-1/2	2-1/2	4
24	150	2-5/16	2-5/8		1-1/8	1		1-1/8	1		1-3/8	13-1/4	1-1/4	6
	300	2-5/16	3-1/8	1-1/2	1-9/16	1-1/2	1-1/2	1-9/16	1-1/2	1-1/2	1-5/8	12-1/2	2-1/4	6

NOTES:
1. M.S. MEANS MILD STEEL ROD, ASTM STANDARD DESIGNATION A-36. NUTS SHALL BE ASTM STANDARD DESIGNATION A-307.
2. H.S. MEANS HIGH STRENGTH STEEL ROD, ASTM STANDARD DESIGNATION A-193 GRADE B-7. NUTS SHALL BE ASTM STANDARD DESIGNATION A-193 GRADE 2-H.

FLANGE – LUG DETAIL

Drawn: GGM	Revised:	WOODMEN HILLS METROPOLITAN DISTRICT	WATER & WASTEWATER SYSTEM STANDARD SPECIFICATIONS	W-23
Date: JAN 2011	Revised:			
Scale: N.T.S.	Revised:			

APPLICATIONS FOR MECHANICAL JOINT RESTRAINTS (W-24)

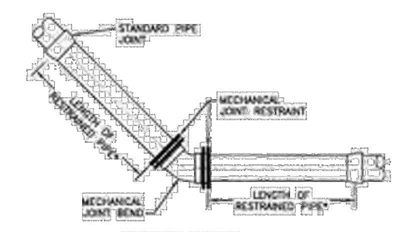

INSTALLATION FOR BENDS

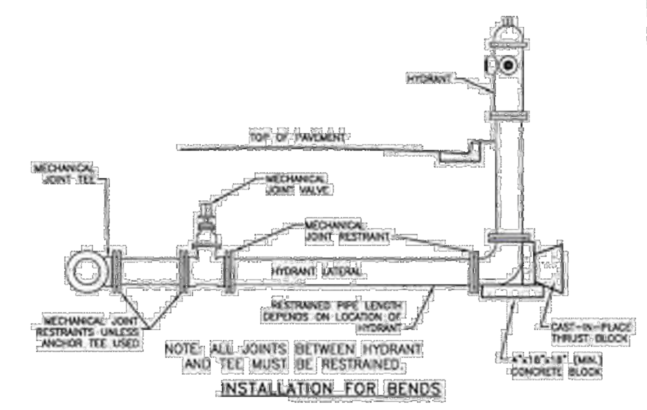

NOTE: ALL JOINTS BETWEEN HYDRANT AND TEE MUST BE RESTRAINED.

INSTALLATION FOR BENDS

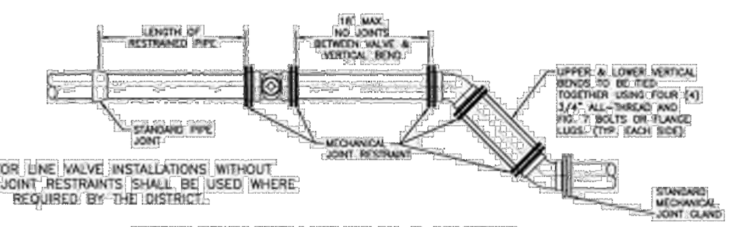

NOTE: FOR LINE VALVE INSTALLATIONS WITHOUT LOWERING, JOINT RESTRAINTS SHALL BE USED WHERE REQUIRED BY THE DISTRICT.

INSTALLATION FOR LINE VALVE & LOWERING

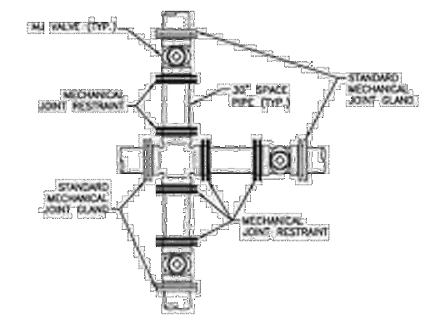

CROSS INSTALLATION

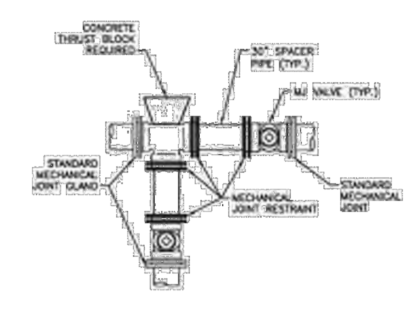

TEE INSTALLATION

NOTES:
1. MECHANICAL JOINTS SHALL BE APPROVED ACCORDING TO MATERIAL SPECIFICATION FOR DIP AND PVC PIPE.
2. LENGTH OF PIPE REQUIRING JOINT RESTRAINT SHALL BE DETERMINED FROM CHART ON DRAWING W-25.
3. RESTRAINED JOINT PVC PIPE SHALL NOT BE USED FOR LOWERINGS.

APPLICATIONS FOR MECHANICAL JOINT RESTRAINTS

Drawn: GGM	Revised:	WOODMEN HILLS METROPOLITAN DISTRICT	WATER & WASTEWATER SYSTEM STANDARD SPECIFICATIONS	W-24
Date: JAN 2011	Revised:			
Scale: N.T.S.	Revised:			

RESTRAINED M.J. PIPE LENGTH (FT) (W-25)

6-INCH DUCTILE IRON AND PVC

TYPE OF FITTING	STATIC PRESSURE (PSI) <100	100-150	150-200
90° BEND, TEE, VALVE OR PLUG	12	18	24
45° BEND	5	8	10
22-1/2° BEND	2	4	5
11-1/4° BEND	1	2	2

16-INCH DUCTILE IRON AND PVC

TYPE OF FITTING	STATIC PRESSURE (PSI) <100	100-150	150-200
90° BEND, TEE, VALVE OR PLUG	29	43	58
45° BEND	12	18	24
22-1/2° BEND	6	9	12
11-1/4° BEND	3	4	6

8-INCH DUCTILE IRON AND PVC

TYPE OF FITTING	STATIC PRESSURE (PSI) <100	100-150	150-200
90° BEND, TEE, VALVE OR PLUG	16	24	32
45° BEND	7	10	13
22-1/2° BEND	3	5	6
11-1/4° BEND	2	2	3

18-INCH DUCTILE IRON AND PVC

TYPE OF FITTING	STATIC PRESSURE (PSI) <100	100-150	150-200
90° BEND, TEE, VALVE OR PLUG	32	48	64
45° BEND	14	20	27
22-1/2° BEND	7	10	13
11-1/4° BEND	3	5	7

12-INCH DUCTILE IRON AND PVC

TYPE OF FITTING	STATIC PRESSURE (PSI) <100	100-150	150-200
90° BEND, TEE, VALVE OR PLUG	23	34	45
45° BEND	9	14	19
22-1/2° BEND	5	7	9
11-1/4° BEND	2	3	4

20-INCH DUCTILE IRON AND PVC

TYPE OF FITTING	STATIC PRESSURE (PSI) <100	100-150	150-200
90° BEND, TEE, VALVE OR PLUG	35	52	70
45° BEND	15	22	29
22-1/2° BEND	7	10	14
11-1/4° BEND	3	5	7

24-INCH DUCTILE IRON AND PVC

TYPE OF FITTING	STATIC PRESSURE (PSI) <100	100-150	150-200
90° BEND, TEE, VALVE OR PLUG	41	61	81
45° BEND	17	25	34
22-1/2° BEND	8	12	16
11-1/4° BEND	4	6	8

NOTES:
1. PRESSURES GREATER THAN 200 PSI REQUIRE SPECIAL DESIGN APPROVED BY THE DISTRICT.
2. LENGTH IS BASED ON MINIMUM 5'-0" OF GROUND COVER AND SOIL COMPACTED ACCORDING TO SECTION 5.15 OF THESE SPECIFICATIONS.
3. APPROVED METHODS OF RESTRAINED PIPE BEYOND INITIAL FITTING SHALL BE:
   A. FOR DUCTILE IRON PIPE, 1100 SERIES MEGALUG BY EBAA IRON OR EQUAL ON MECHANICAL JOINT PIPE OR DOUBLE 1100 SERIES MEGALUG BY EBAA IRON OR EQUAL ON PUSH ON JOINT PIPE.
   B. FOR PVC PIPE, SERIES 1500 OR SERIES 2800 RESTRAINTS BY EBAA IRON OR EQUAL.

RESTRAINED MJ PIPE LENGTH DATA

Drawn: GGM	Revised:	WOODMEN HILLS METROPOLITAN DISTRICT	WATER & WASTEWATER SYSTEM STANDARD SPECIFICATIONS	W-25
Date: JAN 2011	Revised:			
Scale: N.T.S.	Revised:			

PROTECTING TIE-RODS (W-31)

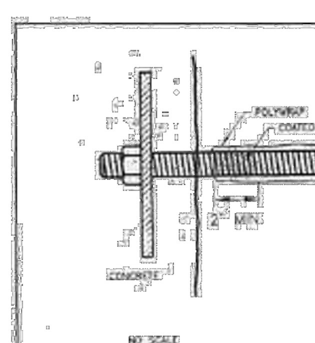

METAL IN CONCRETE:
1. COAT METAL PARTS WHERE IN CONTACT WITH CONCRETE, EXTENDING COATING SEVERAL INCHES BEYOND THE CONCRETE.
2. POLYWRAP THE ROD, OVERLAPPING THE POLYWRAP AND THE COATING A MINIMUM OF 2".
3. SECURE POLYWRAP TO THE ROD USING 2" WIDE, 10-MIL POLYETHYLENE PRESSURE-SENSITIVE TAPE.

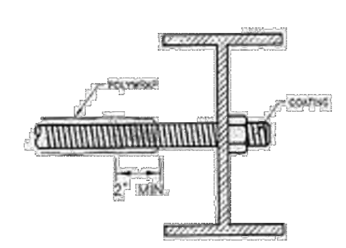

ROD THROUGH I-BEAM:
1. COAT ENTIRE I-BEAM.
2. COAT NUT AND ROD, EXTENDING COATING SEVERAL INCHES BEYOND THE BEAM.
3. POLYWRAP THE ROD, OVERLAPPING THE COATING A MINIMUM OF 2".
4. SECURE POLYWRAP WITH TAPE.

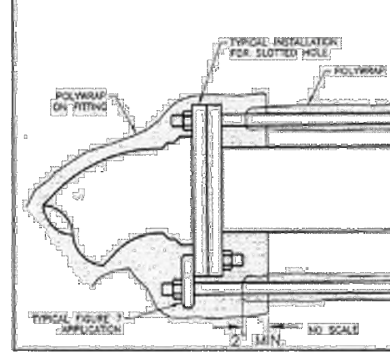

RODS IN MJ FITTING:
1. POLYWRAP THE ROD AND SECURE WITH TAPE.
2. POLYWRAP THE FITTING, OVERLAPPING THE POLYWRAP ON THE ROD A MINIMUM OF 3" AND SECURE WITH TAPE.

PROTECTING TIE-RODS

Drawn: GGM	Revised:	WOODMEN HILLS METROPOLITAN DISTRICT	WATER & WASTEWATER SYSTEM STANDARD SPECIFICATIONS	W-31
Date: JAN 2011	Revised:			
Scale: N.T.S.	Revised:			

TYPICAL INSTALLATION FOR SERVICE LINE & STOP BOX (W-33)

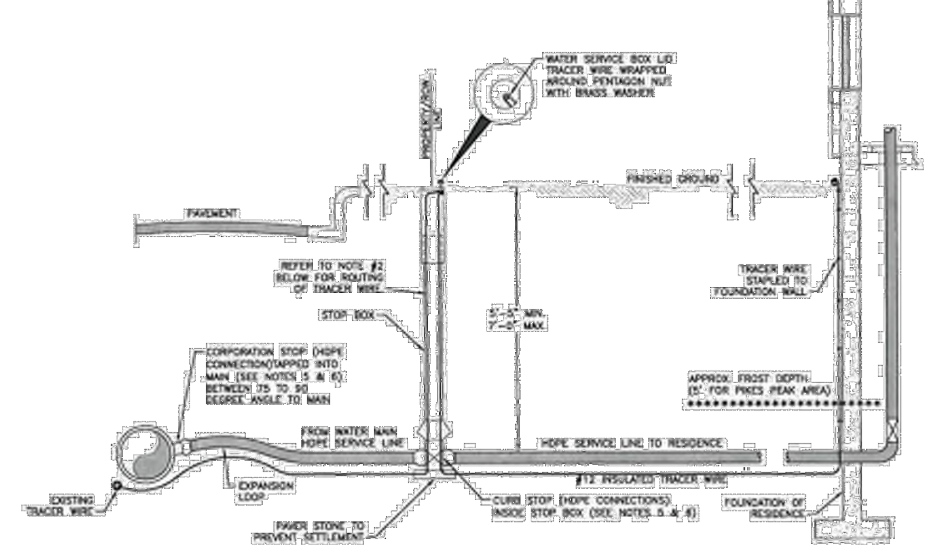

WATER SERVICE LINE NOTES:

1. NO. 12 INSULATED TRACER WIRE SHALL BE PLACED ALONG SERVICE LINE AND SHALL BE A CONTINUOUS (WITHOUT SPLICES) LENGTH.
2. WHEN A NEW PLASTIC SERVICE IS CONNECTED TO A PVC MAIN, THE SERVICE LINE TRACER WIRE SHALL BE CONNECTED TO THE MAIN'S TRACER WIRE WITH A SPLIT-BOLT CONNECTOR. THE TRACER WIRE IS THEN TAPED ALONG THE SERVICE LINE IN AT LEAST 3 LOCATIONS NOT TO EXCEED 10'. ALL CURB STOP BOXES SHALL HAVE A 1-1/2" DIAMETER SCHD 40 PVC PIPE TELESCOPED INSIDE WITH A BELL END TO FIT OVER THE TOP OF THE CURB STOP VALVE. TRACER WIRE SHALL BE EXTENDED UP THE INSIDE OF CURB STOP BOX BUT OUTSIDE THE 1-1/2" SCHD 40 PVC PIPE. TRACER WIRE SHALL BE WRAPPED AROUND CURB STOP BOLT UNDER A BRASS WASHER. THE WIRE WIRE WILL THEN BE ROUTED BACK DOWN INSIDE THE CURB BOX AND OUTSIDE THE SCHD 40 PVC, AND TAPED AGAIN TO THE SERVICE LINE UNTIL IT REACHES THE POINT WHERE THE SERVICE LINE ENTERS THE BUILDING. AT THIS POINT, THE TRACER WIRE WILL BE STAPLED TO THE FOUNDATION WALL THEN TURNED BACK TO FORM A ONE INCH LONG HOOK AND WRAPPED WITH 4" FILLER TAPE AND THEN 3/4" ELECTRICAL TAPE FOR PROTECTION AT THE SURFACE.
3. TO ASSIST IN PE PIPE LOCATING, A 9LB. ANODE SHOULD BE CONNECTED TO THE END OF THE TRACER WIRE AND THE WATER MAIN TRACER WIRE EVERY 1000 FEET ALONG THE LENGTH OF THE WATER MAIN. THE NEW ANODE WILL BE ATTACHED TO THE WATER SERVICE/WATER MAIN TRACER WIRE WITH A SPLIT-BOLT CONNECTOR. THE CONNECTOR IS TO BE WRAPPED FIRST WITH A 4" FILLER TAPE AND THEN 3/4" ELECTRICAL TAPE FOR PROTECTION AGAINST CORROSION.
4. THE APPROPRIATE CLEARANCES BETWEEN ANODES AND STEEL PIPES OR OTHER STRUCTURES MUST BE MAINTAINED PER WATER LINE EXTENSION & SERVICE STANDARDS.
5. BRASS FITTINGS, CORP. STOP AND CURB STOP SHALL BE WRAPPED WITH WAX TAP FOR PROTECTION PER THE WATER LINE EXTENSION & SERVICE STANDARDS.
6. STIFFENERS SHALL BE INSTALLED WITHIN THE HDPE SERVICE LINE AT THE CONNECTION POINTS OF THE FITTINGS.

TYPICAL INSTALLATION FOR SERVICE LINE & STOP BOX

Drawn: GGM	Revised:	WOODMEN HILLS METROPOLITAN DISTRICT	WATER & WASTEWATER SYSTEM STANDARD SPECIFICATIONS	W-33
Date: JAN 2011	Revised:			
Scale: N.T.S.	Revised:			

UTILITY SERVICE LOCATIONS (W-39)

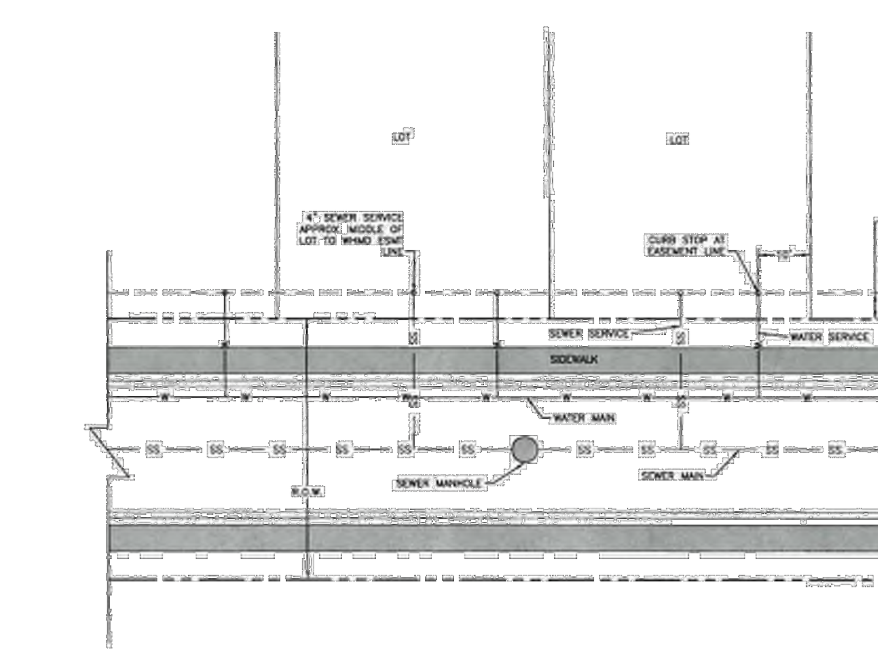

NOTES:
1. WATER SERVICE TO BE 10' FROM "DOWNSTREAM" PROPERTY LINE AND EXTENDED TO WHMD UTILITY EASEMENT LINE.
2. SEWER SERVICE TO BE PLACED APPROXIMATELY IN THE MIDDLE OF THE LOT AND EXTENDED TO WHMD UTILITY EASEMENT LINE.
3. SERVICES SHALL BE MARKED WITH 2"x4" POST AT TERMINATION POINT FOR LOCATION DURING CONNECTION TO RESIDENCE. POSTS SHALL BE SPRAY-PAINTED BLUE FOR WATER AND GREEN FOR SEWER.

UTILITY SERVICE LOCATIONS

Drawn: GGM	Revised:	WOODMEN HILLS METROPOLITAN DISTRICT	WATER & WASTEWATER SYSTEM STANDARD SPECIFICATIONS	W-39
Date: JAN 2011	Revised:			
Scale: N.T.S.	Revised:			

Galloway
1155 Kelly Johnson Blvd., Suite 305
Colorado Springs, CO 80920
719.900.7220
GallowayUS.com

04/07/2021

COPYRIGHT
THESE PLANS ARE AN INSTRUMENT OF SERVICE AND ARE THE PROPERTY OF GALLOWAY, AND MAY NOT BE DUPLICATED, DISCLOSED, OR REPRODUCED WITHOUT THE WRITTEN CONSENT OF GALLOWAY. COPYRIGHTS AND INFRINGEMENTS WILL BE ENFORCED AND PROSECUTED.

CHALLENGER HOMES

WATER & WASTEWATER CONSTRUCTION PLANS
FALCON MEADOWS AT BENT GRASS FILING NO. 1
FOR
CHALLENGER COMMUNTIES, LLC

BENT GRASS MEADOWS DRIVE & MERDIAN ROAD
FALCON, CO 80831 - EL PASO COUNTY

#	Date	Issue / Description	Init.

Project No:	CLH000018
Drawn By:	CMWJ
Checked By:	RGD
Date:	03/26/2021

WATER DETAIL SHEET 3

U3.3

H:\Challenger Homes Inc\CO, El Paso County-CLH000018-Bent Grass Filing 3\CADD\3-CD\UTIL\CLH18_U3.1-Details.dwg - Caleb Johnson - 3/26/2021

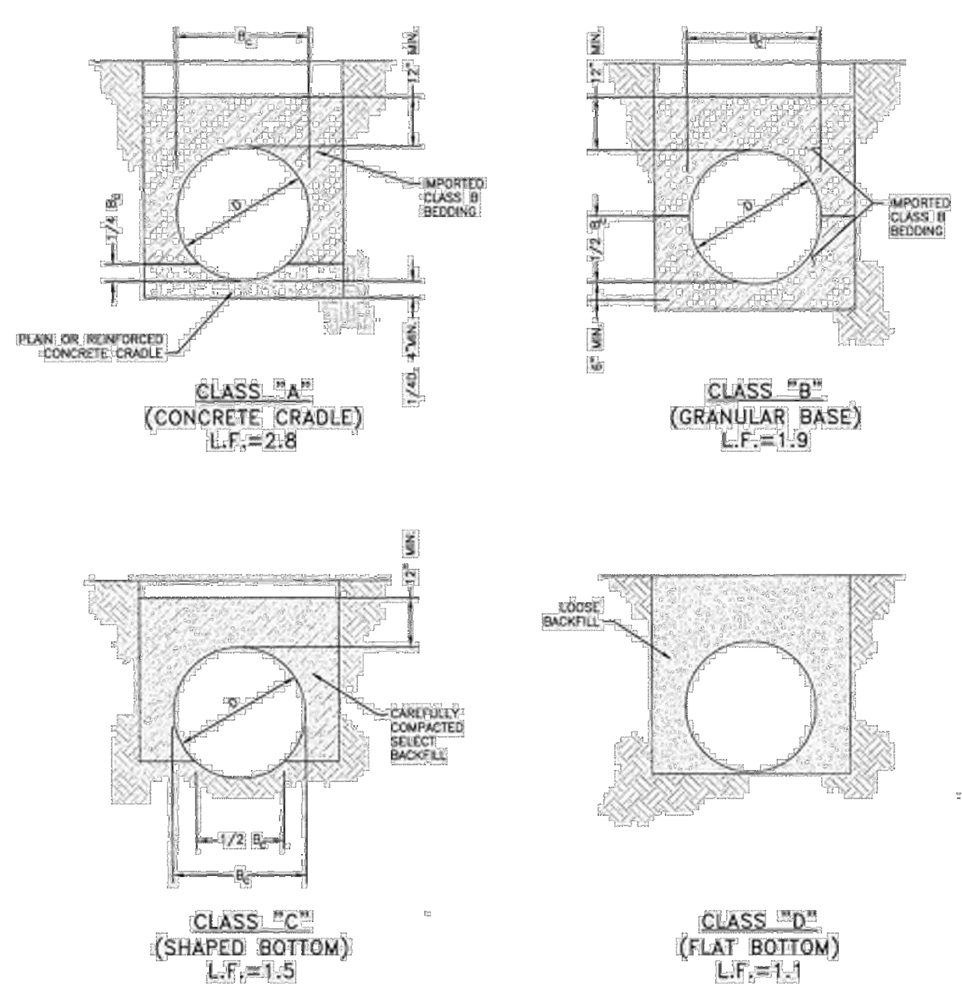

NOTES:

1. FOR ROCK OR OTHER INCOMPRESSIBLE MATERIALS, THE TRENCH SHALL BE OVEREXCAVATED A MINIMUM OF 6" AND REFILLED WITH GRANNULAR BEDDING MATERIAL AS DEFINED BY CLASS "B" BEDDING.
2. L.F. = LOADFACTOR
3. CLASS "D" BEDDING WILL NOT BE ACCEPTABLE UNDER ANY CONDITION.
4. MINIMUM DENSITY FOR CAREFULLY COMPACTED SELECT BACKFILL SHALL BE 95% OF STD. PROCTOR DENSITY OR AS SPECIFIED FOR THE TRENCH BACKFILL WHICHEVER IS GREATER.

PIPE BEDDING

Drawn: GGM | Date: JAN 2011 | Scale: N.T.S. | Revised: | Revised: | Revised: | WOODMEN HILLS METROPOLITAN DISTRICT | WATER & WASTEWATER SYSTEM STANDARD SPECIFICATIONS | WW-1

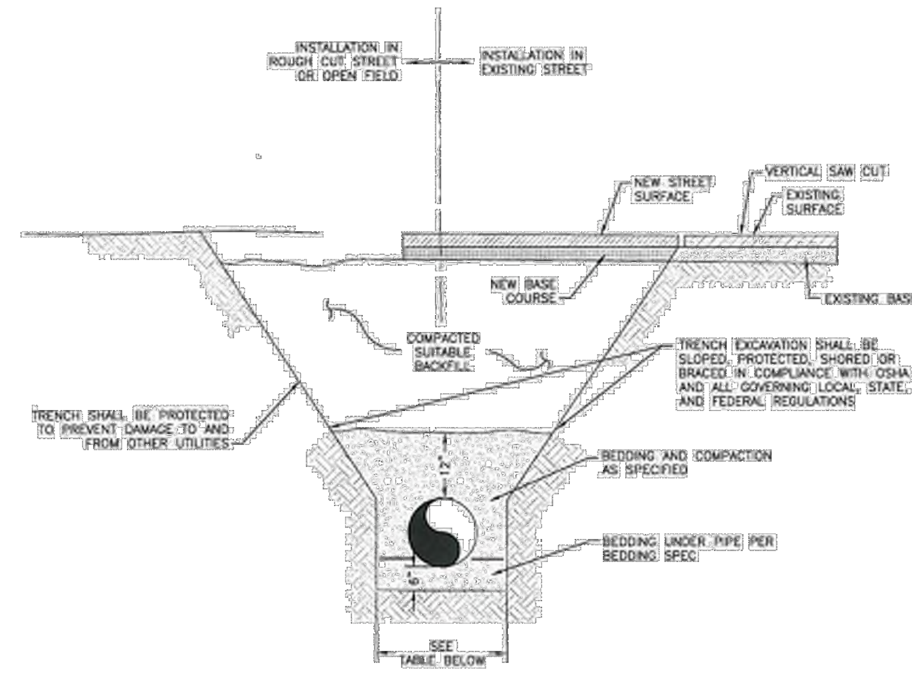

BOTTOM OF TRENCH WIDTH		
PIPE DIAMETER	MINIMUM WIDTH	MAXIMUM WIDTH
4"	1'–5"	3'–9"
6"	1'–7"	3'–11"
8"	1'–9"	4'–1"
12"	2'–1"	4'–5"
15"	2'–6"	4'–9"
18"	2'–10"	5'–2"
24"	3'–2"	5'–6"

ALL PIPE EMBEDMENT SHALL BE IMPORTED CLASS B BEDDING UNLESS OTHERWISE DIRECTED.

AN OVER EXCAVATED TRENCH SHALL BE REFILLED AND THOROUGHLY COMPACTED UNDER THE DIRECTION OF THE DISTRICT.

UNDER NO CIRCUMSTANCES WILL PIPE BE LAID IN A PROPOSED FILL AREA PRIOR TO IT BEING COMPLETELY FILLED. THE FILL WILL BE PLACED FIRST TO PROPOSED GRADE AND COMPACTED AS REQUIRED. A TRENCH THEN WILL BE EXCAVATED AND THE PIPE INSTALLED IN THE USUAL MANNER.

TYPICAL TRENCH CROSS SECTION

Drawn: GGM | Date: JAN 2011 | Scale: N.T.S. | Revised: | Revised: | Revised: | WOODMEN HILLS METROPOLITAN DISTRICT | WATER & WASTEWATER SYSTEM STANDARD SPECIFICATIONS | WW-2

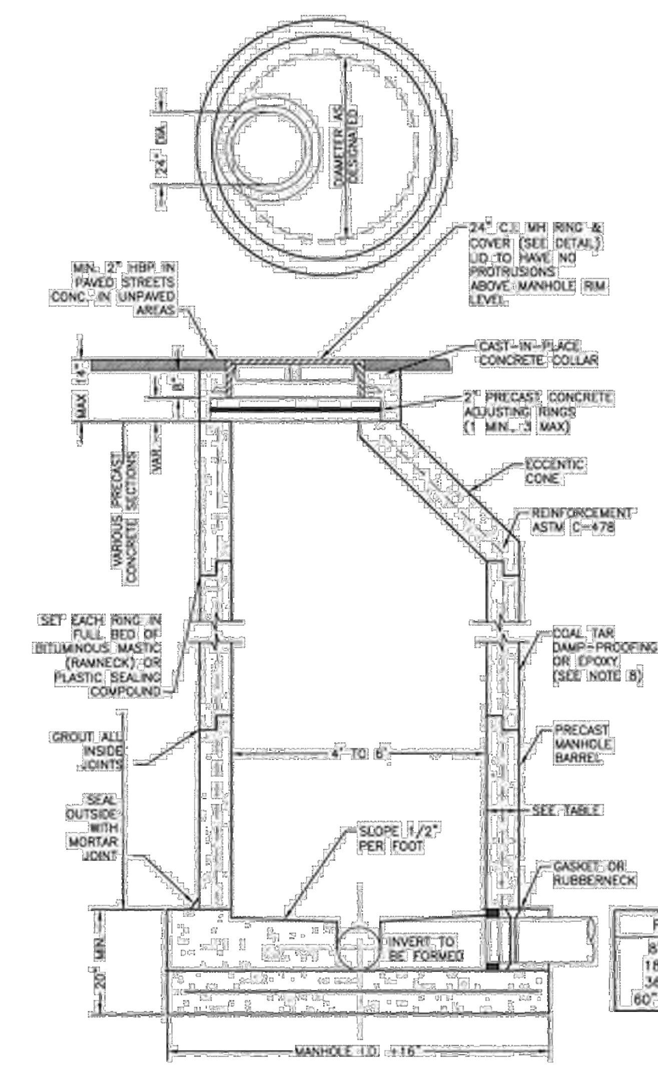

1. MANHOLE BARREL MINIMUM DIAMETER SHALL CONFORM TO TABLE.
2. SHAPING FOR SMOOTH MANHOLE INVERTS MUST BE DONE BY FORMING/SHAPING CONCRETE BASE.
3. PRECAST SECTIONS TO CONFORM TO ASTM C-478.
4. STUB-OUTS SHALL EXTEND A MINIMUM OF 6" PAST MANHOLE O.D. AND BE SATISFACTORILY PLUGGED.
5. CONCRETE MANHOLES MAY BE POURED IN PLACE ONLY WITH PRIOR DESIGN AND INSPECTION APPROVAL.
6. ALL MORTOR GROUT SHALL BE MIXED WITH THE TYPE V CEMENT.
7. APPLY COAL TAR EPOXY DAMP-PROOFING TO ALL EXTERIOR CONCRETE SURFACES.
8. CENTER REINF. IN BASE POUR BELOW PIPE O.D. AT FL.
9. ALL EXTERIOR JOINTS SHALL RECEIVE BUTYL RUBBER JOINT WRAP. REFER TO SPECIFICATIONS.

PIPE I.D.	MANHOLE I.D.	WALL
8" TO 15"	4'–0"	5"
18" TO 30"	5'–0"	6"
36" TO 54"	6'–0"	7"
60" & LARGER	SPECIAL DESIGN	

PRECAST MANHOLE

Drawn: GGM | Date: JAN 2011 | Scale: N.T.S. | Revised: | Revised: | Revised: | WOODMEN HILLS METROPOLITAN DISTRICT | WATER & WASTEWATER SYSTEM STANDARD SPECIFICATIONS | WW-3

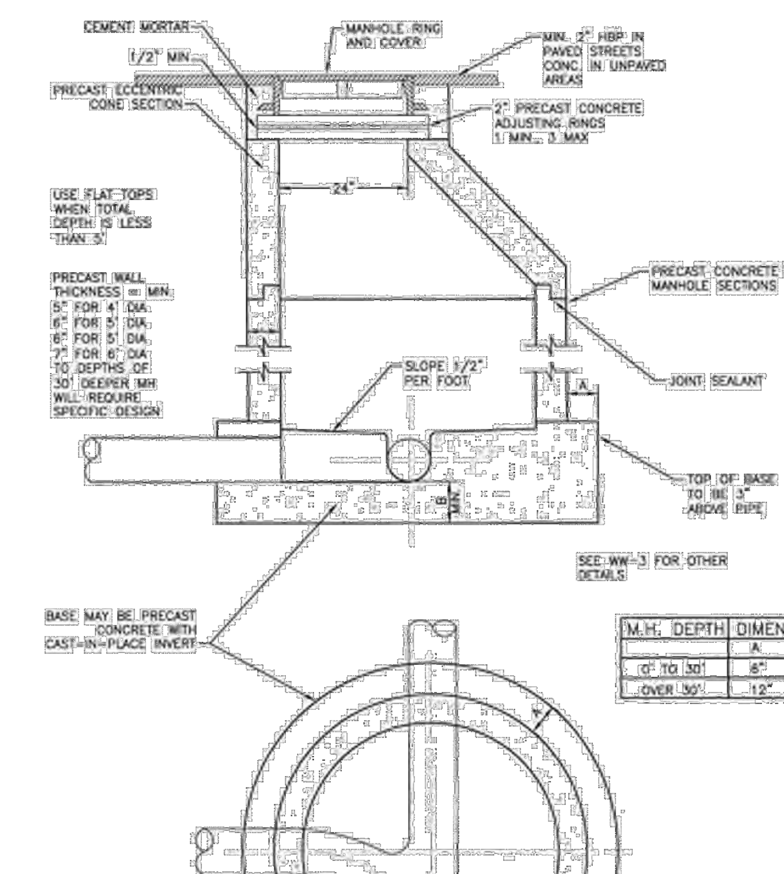

M.H. DEPTH	DIMENSION	
	A	B
0' TO 30'	8"	8"
OVER 30'	12"	12"

WATERPROOFING REQUIREMENTS

1. APPLY CEMENT GROUT LAYER (⅜" TO ½" THICK) TO ALL INTERIOR JOINTS ABOVE FLOW CHANNEL.
2. APPLY COAL TAR EPOXY DAMPROOFING TO ALL EXTERIOR CONCRETE SURFACES.
3. APPLY CEMENT GROUT LAYER (⅜" TO ½" THICK) TO ALL EXTERIOR CONCRETE SURFACES, AS DIRECTED BY DISTRICT. APPLY PRIOR TO DAMPPROOFING.

SANITARY SEWER MANHOLE

Drawn: GGM | Date: JAN 2011 | Scale: N.T.S. | Revised: | Revised: | Revised: | WOODMEN HILLS METROPOLITAN DISTRICT | WATER & WASTEWATER SYSTEM STANDARD SPECIFICATIONS | WW-4

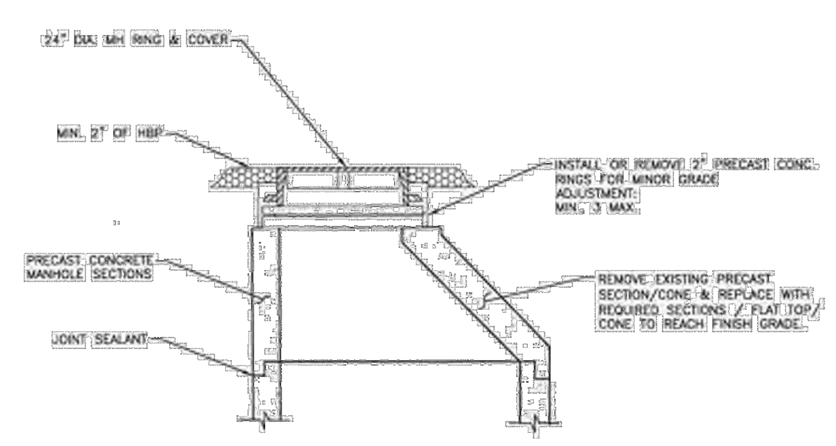

MANHOLE RING AND COVER ADJUSTMENT

Drawn: GGM | Date: JAN 2011 | Scale: N.T.S. | Revised: | Revised: | Revised: | WOODMEN HILLS METROPOLITAN DISTRICT | WATER & WASTEWATER SYSTEM STANDARD SPECIFICATIONS | WW-5

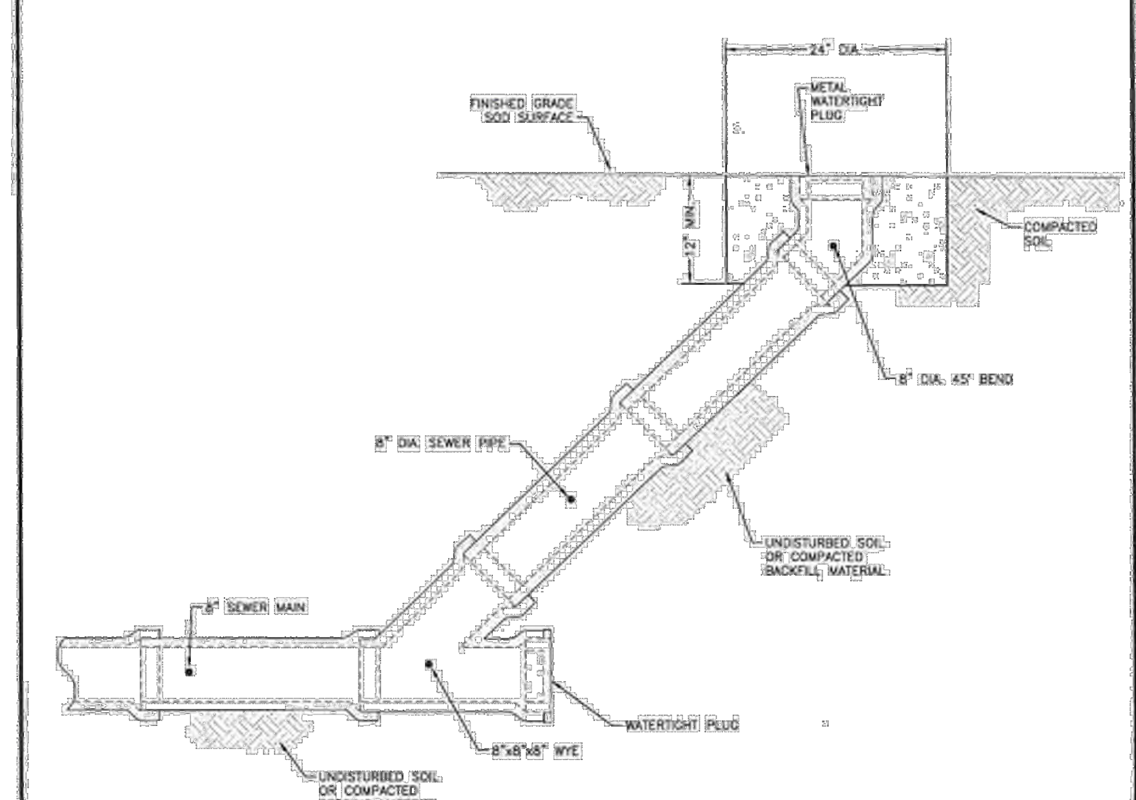

SANITARY SEWER MAIN CLEAN-OUT

Drawn: GGM | Date: JAN 2011 | Scale: N.T.S. | Revised: | Revised: | Revised: | WOODMEN HILLS METROPOLITAN DISTRICT | WATER & WASTEWATER SYSTEM STANDARD SPECIFICATIONS | WW-6

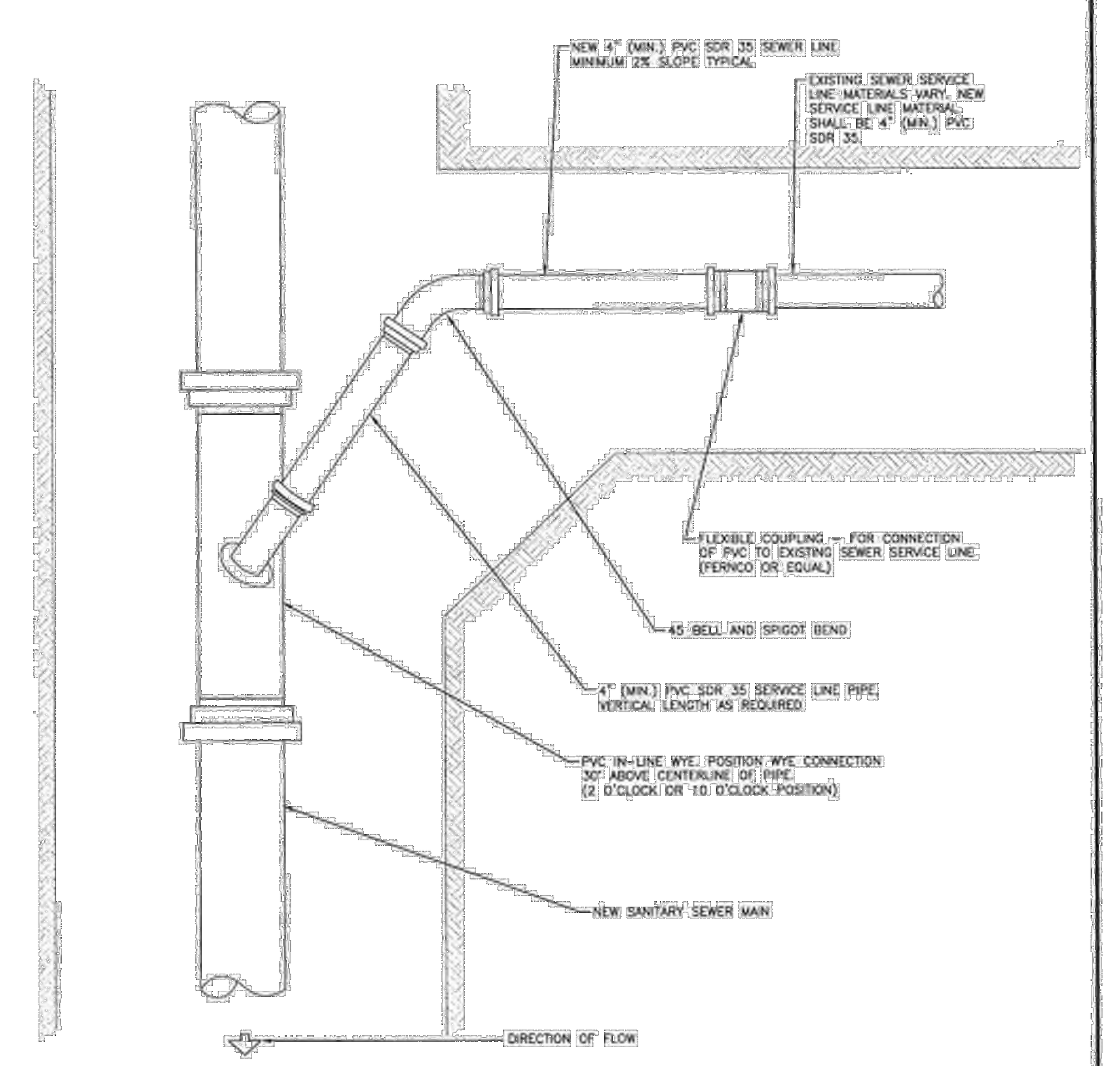

SANITARY SEWER SERVICE CONNECTION

Drawn: GGM | Date: JAN 2011 | Scale: N.T.S. | Revised: | Revised: | Revised: | WOODMEN HILLS METROPOLITAN DISTRICT | WATER & WASTEWATER SYSTEM STANDARD SPECIFICATIONS | WW-7

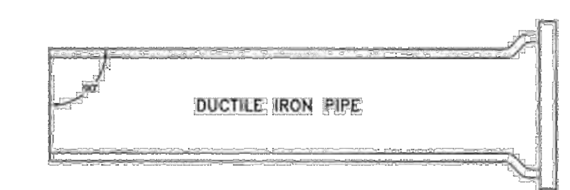

MECHANICAL JOINT CONNECTION

PIPE MUST BE CUT AT RIGHT ANGLES TO LONGITUDINAL CENTERLINE IN ALL CASES.

PIPE ENDS SHALL BE FREE OF BURRS.

MORTAR LINING SHALL BE FLUSH WITH PIPE END.

GOUGES CUT IN PIPE ENDS SHALL NOT BE ALLOWED.

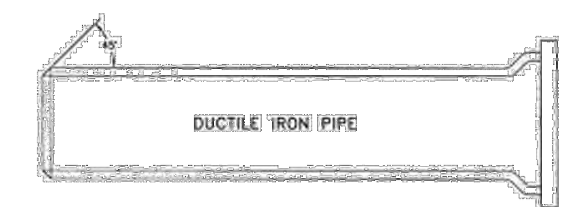

SLIP JOINT CONNECTION

PIPE CUT IN STRAIGHT LINE AND BEVELED AT 45° ANGLE ON END.

GENERAL NOTES:

1. ALL PIPE CUTTING EQUIPMENT AND PIPE CUTS MUST BE APPROVED BY THE WATER AND SANITATION DISTRICT INSPECTOR.
2. ALL PIPE ENDS TO BE USED IN INSTALLATION SHALL BE DRESSED SMOOTH TO THE SATISFACTION OF THE INSPECTOR PRIOR TO INSTALLATION.
3. AT THE REQUEST OF THE CONTRACTOR MAKING THE INSTALLATION, THE DISTRICT WILL MAKE PIPE CUTS, PROVIDING THE CURRENT FEE PER CUT IS PAID AND 24-HOUR NOTICE IS GIVEN (THE CURRENT FEE IS SUBJECT TO CHANGE.)
4. ALL DIP DELIVERED TO JOB SITE MUST BE NEW MATERIAL.

PIPE CUTTING

Drawn: GGM | Date: JAN 2011 | Scale: N.T.S. | Revised: | Revised: | Revised: | WOODMEN HILLS METROPOLITAN DISTRICT | WATER & WASTEWATER SYSTEM STANDARD SPECIFICATIONS | WW-11

Galloway
1155 Kelly Johnson Blvd., Suite 305
Colorado Springs, CO 80920
719.900.7220
GallowayUS.com

COLORADO LICENSED PROFESSIONAL ENGINEER RONALD GRANT DE... PE 0051922
04/07/2021

COPYRIGHT
THESE PLANS ARE AN INSTRUMENT OF SERVICE AND ARE THE PROPERTY OF GALLOWAY, AND MAY NOT BE DUPLICATED, DISCLOSED, OR REPRODUCED WITHOUT THE WRITTEN CONSENT OF GALLOWAY. COPYRIGHTS AND INFRINGEMENTS WILL BE ENFORCED AND PROSECUTED.

CHALLENGER HOMES

WATER & WASTEWATER CONSTRUCTION PLANS
FALCON MEADOWS AT BENT GRASS FILING NO. 1
FOR
CHALLENGER COMMUNTIES, LLC

BENT GRASS MEADOWS DRIVE & MERDIAN ROAD
FALCON, CO 80831 - EL PASO COUNTY

#	Date	Issue / Description	Init.

Project No:	CLH000018
Drawn By:	CMWJ
Checked By:	RGD
Date:	03/26/2021

WASTEWATER DETAIL SHEET 1

U3.4

FIELD INSTALLATION OF POLYETHYLENE WRAP

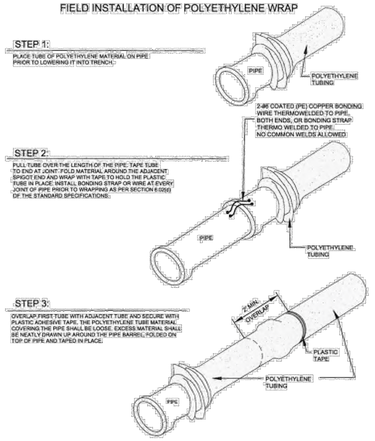

POLYETHYLENE PIPE WRAP

Drawn: CDM | Revised: | Revised: | Revised:
Date: JAN 2011 | Scale: N.T.S.

WOODMEN HILLS METROPOLITAN DISTRICT — WATER & WASTEWATER SYSTEM STANDARD SPECIFICATIONS — WW-12

MAXIMUM DEFLECTION PER SLIP JOINT OF D.I.P.

PIPE DIAMETER I.D. (IN)	O.D. (IN)	O.D. (FT)	MFRS. DEFL.	DESIGN DEFLECTION (BOS MAX.) MAX. DEFL. DIST. (1)	(2)	APPROX. RADIUS FOR DEFLECTING CURVES WITHOUT BENDS 20'L	18'L
4"	4.80"	.400'	5°00'00"	4°00'00"	16"	15"	286'	258'
6"	6.90"	.575'	5°00'00"	4°00'00"	16"	15"	286'	258'
8"	9.05"	.754'	5°00'00"	4°00'00"	16"	15"	286'	258'
10"	11.10"	.925'	5°00'00"	4°00'00"	16"	15"	286'	258'
12"	13.20"	1.100'	5°00'00"	4°00'00"	16"	15"	286'	258'
14"	15.30"	1.275'	3°00'00"	2°24'00"	10"	9"	477'	430'
16"	17.40"	1.450'	3°00'00"	2°24'00"	10"	9"	477'	430'
18"	19.50"	1.625'	3°00'00"	2°24'00"	10"	9"	477'	430'
20"	21.60"	1.800'	3°00'00"	2°24'00"	10"	9"	477'	430'
24"	25.80"	2.150'	3°00'00"	2°24'00"	10"	9"	477'	430'
30"	32.00"	2.666'	2°30'00"	2°00'00"	8"	7"	573'	516'
36"	38.30"	3.192'	2°00'00"	1°36'00"	6"	6"	716'	645'
42"	44.50"	3.708'	2°00'00"	1°36'00"	6"	6"	716'	645'

(1) 20'L = NORMAL 20-FOOT JOINT LAYING LENGTH
(2) = NORMAL 18-FOOT JOINT LAYING LENGTH

MAXIMUM PIPELINE DEFLECTION DATA

Drawn: CDM | Revised: | Revised: | Revised:
Date: JAN 2011 | Scale: N.T.S.

WOODMEN HILLS METROPOLITAN DISTRICT — WATER & WASTEWATER SYSTEM STANDARD SPECIFICATIONS — WW-14

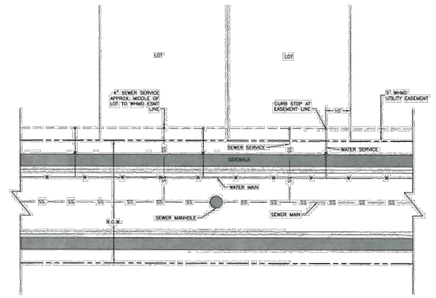

NOTES:

1. WATER SERVICE TO BE 10' FROM "DOWNSTREAM" PROPERTY LINE AND EXTENDED TO WHMD UTILITY EASEMENT LINE.
2. SEWER SERVICE TO BE PLACED APPROXIMATELY IN THE MIDDLE OF THE LOT AND EXTENDED TO WHMD UTILITY EASEMENT LINE.
3. SERVICES SHALL BE MARKED WITH 2"x4" POST AT TERMINATION POINT FOR LOCATION DURING CONNECTION TO RESIDENCE. POSTS SHALL BE SPRAY-PAINTED BLUE FOR WATER AND GREEN FOR SEWER.

UTILITY SERVICE LOCATIONS

Drawn: CDM | Revised: | Revised: | Revised:
Date: JAN 2011 | Scale: N.T.S.

WOODMEN HILLS METROPOLITAN DISTRICT — WATER & WASTEWATER SYSTEM STANDARD SPECIFICATIONS — WW-20

Galloway
1155 Kelly Johnson Blvd., Suite 305
Colorado Springs, CO 80920
719.900.7220
GallowayUS.com

COPYRIGHT
THESE PLANS ARE AN INSTRUMENT OF SERVICE AND ARE THE PROPERTY OF GALLOWAY, AND MAY NOT BE DUPLICATED, DISCLOSED, OR REPRODUCED WITHOUT THE WRITTEN CONSENT OF GALLOWAY. COPYRIGHTS AND INFRINGEMENTS WILL BE ENFORCED AND PROSECUTED.

CHALLENGER HOMES

WATER & WASTEWATER CONSTRUCTION PLANS
FALCON MEADOWS AT BENT GRASS FILING NO. 1
FOR
CHALLENGER COMMUNITIES, LLC

BENT GRASS MEADOWS DRIVE & MERDIAN ROAD
FALCON, CO 80831 - EL PASO COUNTY

#	Date	Issue / Description	Init.

Project No:	CLH000018
Drawn By:	CMWJ
Checked By:	RGD
Date:	03/26/2021

WASTEWATER DETAIL SHEET 2

U3.5
Sheet 21 of 21

H:\Challenger Homes Inc\CO_El Paso County\CLH0000018\Bent Grass Filing 3\CAD\SHEETS\CLH18_U3.1 Details.dwg - Caleb Johnson - 3/26/2021