JOHNSON DEVELOPMENT ASSOCIATES

CONSTITUTION STORAGE

LOT 1, EIGHT LINE SUBDIVISION LOCATED IN THE NORTHWEST QUARTER OF SECTION 5, TOWNSHIP 14 SOUTH, RANGE 65 WEST OF THE 6TH PRINCIPAL MERIDIAN, COUNTY OF EL PASO, STATE OF COLORADO

FINAL GRADING & EROSION CONTROL PLANS

PROJECT CONTACTS

PROPERTY OWNER
JASPERCO, LLC.
5532 SADDLE ROCK TRAIL
COLORADO SPRINGS, CO 80918
ATTN: TONY COLON
EMAIL: TONYC@COLONFAM.COM

APPLICANT
JOHNSON DEVELOPMENT ASSOCIATES, INC.
100 DUNBAR STREET, SUITE 400
SPARTANBURG, SC 29306
TELE: (864) 529-1297
ATTN: BRIAN KEARNEY
EMAIL: BKEARNEY@JOHNSONDEVELOPMENT.NET

CIVIL ENGINEER
GALLOWAY & CO., INC.
1155 KELLY JOHNSON BLVD., SUITE 305
COLORADO SPRINGS, CO 80920
TELE: (719) 900-7220
ATTN: GRANT DENNIS, P.E.
EMAIL: GRANTDENNIS@GALLOWAYUS.COM

GEOTECHNICAL ENGINEER
ROCKY MOUNTAIN GEOTECHNICAL, INC
555 E. PIKES PEAK AVE, SUITE 107
COLORADO SPRINGS, CO 80903
TELE: (303) 634-1999
ATTN: KENNETH L. MEYERS, PE

TRAFFIC ENGINEER
GALLOWAY & CO., INC.
5500 GREENWOOD PLAZA BLVD, SUITE 200
GREENWOOD VILLAGE, CO 80111
TELE: (303) 770-8884
ATTN: BRIAN HORAN, P.E.
EMAIL: BRIANHORAN@GALLOWAYUS.COM

SURVEYOR
GALLOWAY & CO., INC.
1155 KELLY JOHNSON BLVD., SUITE 305
COLORADO SPRINGS, CO 80920
TELE: (719) 337-1262
ATTN: BRIAN DENNIS
EMAIL: BRIANDENNIS@GALLOWAYUS.COM

UTILITY CONTACTS

WATER & WASTEWATER
CHEROKEE METROPOLITAN DISTRICT
6250 PALMER PARK BLVD.
COLORADO SPRINGS, CO 80915
TELE: (719) 597-5080
ATTN: KEVIN BROWN
EMAIL: KBROWN@CHEROKEEMETROPOLITAN.ORG

ELECTRIC
MOUNTAIN VIEW ELECRIC
11140 E WOODMEN RD
FALCON, CO 80831
TELE: (719) 495-2283
CATHY HANSEN-LEE
EMAIL: CATHY.H@MVEA.COOP

NATURAL GAS
COLORADO SPRINGS UTILITIES (CSU)
7710 DURANT DRIVE, P.O. BOX 1103, MAIL CODE 2150
COLORADO SPRINGS, CO 80947-2150
TELE: (719) 668-5573
AARON CASSIO
EMAIL: ACASSIO@CSU.ORG

FIRE
CIMARRON HILLS FIRE PROTECTION DISTRICT
1835 TUSKEGEE PL
COLORADO SPRINGS, CO 80915
TELE: (719) 591-0960
EMAIL: JMCLEOD@CIMARRON

VICINITY MAP
0 100 200 400
SCALE: 1"=400'

SHEET INDEX		
SHEET NUMBER	SHEET TITLE	SHEET DESCRIPTION
1	COVER SHEET	G0.0
2	GRADING & EROSION CONTROL NOTES	G0.1
3	GRADING & EROSION CONTROL INITIAL PLAN	G1.1
4	GRADING & EROSION CONTROL INTERIM PLAN	G2.1
5	GRADING & EROSION CONTROL FINAL PLAN	G3.1
6	GEC DETAILS	G4.1
7	GEC DETAILS	G4.2
8	GEC DETAILS	G4.3
9	GEC DETAILS	G4.4
10	GEC DETAILS	G4.5

ENGINEER'S STATEMENT
THIS GRADING AND EROSION CONTROL PLAN WAS PREPARED UNDER MY DIRECTION AND SUPERVISION AND IS CORRECT TO THE BEST OF MY KNOWLEDGE AND BELIEF. SAID PLAN HAS BEEN PREPARED ACCORDING THE CRITERIA ESTABLISHED BY THE COUNTY FOR GRADING AND EROSION CONTROL PLANS. I ACCEPT RESPONSIBILITY FOR ANY LIABILITY CAUSED BY AN NEGLIGENT ACTS, ERRORS OR OMISSIONS ON MY PART IN PREPARING THIS PLAN.

RONALD G. DENNIS, COLORADO P.E. NO. 0051622 DATE

OWNER'S STATEMENT
I, THE OWNER/DEVELOPER HAVE READ AND WILL COMPLY WITH THE REQUIREMENTS OF THE GRADING AND EROSION CONTROL PLAN.

BRIAN KEARNEY DATE
JOHNSON DEVELOPMENT ASSOCIATES

EL PASO COUNTY
COUNTY PLAN REVIEW IS PROVIDED ONLY FOR GENERAL CONFORMANCE WITH COUNTY DESIGN CRITERIA. THE COUNTY IS NOT RESPONSIBLE FOR THE ACCURACY AND ADEQUACY OF THE DESIGN, DIMENSIONS, AND/ OR ELEVATIONS WHICH SHALL BE CONFIRMED AT THE JOB SITE. THE COUNTY THROUGH THE APPROVAL OF THIS DOCUMENT ASSUMES NO RESPONSIBILITY FOR COMPLETENESS AND/ OR ACCURACY OF THIS DOCUMENT. FILED IN ACCORDANCE WITH THE REQUIREMENTS OF THE EL PASO COUNTY LAND DEVELOPMENT CODE, DRAINAGE CRITERIA MANUAL, VOLUMES 1 AND 2, AND ENGINEERING CRITERIA MANUAL AS AMENDED.

IN ACCORDANCE WITH ECM SECTION 1.12, THESE CONSTRUCTION DOCUMENTS WILL BE VALID FOR CONSTRUCTION FOR A PERIOD OF 2 YEARS FROM THE DATE SIGNED BY THE EL PASO COUNTY ENGINEER. IF CONSTRUCTION HAS NOT STARTED WITHIN THOSE 2 YEARS, THE PLANS WILL NEED TO BE RESUBMITTED FOR APPROVAL, INCLUDING PAYMENT OF REVIEW FEES AT THE PLANNING AND COMMUNITY DEVELOPMENT DIRECTORS DISCRETION.

JENNIFER IRVINE, P.E. DATE
COUNTY ENGINEER / ECM ADMINISTRATOR

Unresolved. Remove "Jennifer Irvine" from signature block.

Unresolved. Update to PPR-2224

PCD FILING NO.
XX-XX-XXX

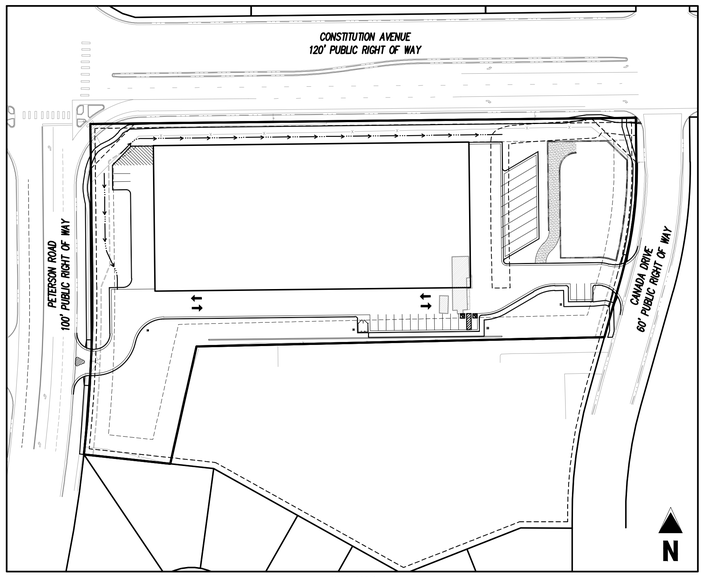

SITE MAP
0 40 80
SCALE: 1"=80'

BASIS OF BEARINGS
BASIS OF BEARING: ALL BEARINGS ARE GRID BEARINGS OF THE COLORADO STATE PLANE COORDINATE SYSTEM, CENTRAL ZONE, NORTH AMERICAN DATUM 1983. THE NORTH LINE OF THE NORTHWEST QUARTER OF SECTION 5, TOWNSHIP 14 SOUTH, RANGE 65 WEST BEARS N89°20'41"E, MONUMENTED BY THE NORTHWEST CORNER OF SAID SECTION 5, BEING A 3-1/4" ALUMINUM CAP STAMPED "PLS 4842 1985" IN RANGE BOX, AND BY THE NORTH QUARTER CORNER OF SAID SECTION 5, BEING A 3-1/4" ALUMINUM CAP STAMPED "PLS 30829 2003", AS SHOWN HEREON.

BENCHMARK
COLORADO SPRINGS UTILITIES FACILITIES INFORMATION MANAGEMENT SYSTEM (FIMS) BENCHMARK SR07 BEING A 2" ALUMINUM CAP STAMPED "CSU FIMS CONTROL SR07" AT THE SOUTHEAST CORNER OF THE CONCRETE BASE FOR AN ELECTRIC VAULT ON THE WEST SIDE OF PETERSON ROAD, ABOUT 360' SOUTH OF THE CENTER LINE OF LEOTI DRIVE.

FIMS DATUM ELEVATION = 6534.61

CAUTION – NOTICE TO CONTRACTOR
1. ALL UTILITY LOCATIONS SHOWN ARE BASED ON MAPS PROVIDED BY THE APPROPRIATE UTILITY COMPANY AND FIELD SURFACE EVIDENCE AT THE TIME OF SURVEY AND IS TO BE CONSIDERED AN APPROXIMATE LOCATION ONLY. IT IS THE CONTRACTOR'S RESPONSIBILITY TO FIELD VERIFY THE LOCATION OF ALL UTILITIES, PUBLIC OR PRIVATE, WHETHER SHOWN ON THE PLANS OR NOT, PRIOR TO CONSTRUCTION. REPORT ANY DISCREPANCIESTO THE ENGINEER PRIOR TO CONSTRUCTION.
2. WHERE A PROPOSED UTILITY CROSSES AN EXISTING UTILITY, IT IS THE CONTRACTOR'S RESPONSIBILITY TO FIELD VERIFY THE HORIZONTAL AND VERTICAL LOCATION OF SUCH EXISTING UTILITY, EITHER THROUGH POTHOLING OR ALTERNATIVE METHOD. REPORT INFORMATION TO THE ENGINEER PRIOR TO CONSTRUCTION.

811 Know what's **below.** **Call** before you dig.

LIST OF ABBREVIATIONS
SHT – SHEET
Δ – DEFLECTION ANGLE
L – LENGTH
R – RADIUS
CB – CHORD BEARING
C – CHORD LENGTH
N – NORTH/NORTHING
W – WEST
E – EAST/EASTING
S – SOUTH
DET – DETAIL
EX – EXISTING
W/ – WITH
PC – POINT OF CURVATURE/PORTLAND CEMENT
WWF – WELDED WIRE FABRIC
VERT – VERTICAL
OC – ON CENTER
FDC – FIRE DEPARTMENT CONNECTION
CT – COURT
DR – DRIVE
TYP – TYPICAL
REC – RECEPTION NUMBER
ø, DIA – DIAMETER
PT – POINT OF TANGENCY
MIN – MINIMUM
MAX – MAXIMUM
HDPE – HIGH DENSITY POLYETHYLENE

Galloway
6162 S. Willow Drive, Suite 320
Greenwood Village, CO 80111
303.770.8884
GallowayUS.com

COPYRIGHT
THESE PLANS ARE AN INSTRUMENT OF SERVICE AND ARE THE PROPERTY OF GALLOWAY, AND MAY NOT BE DUPLICATED, DISCLOSED, OR REPRODUCED WITHOUT THE WRITTEN CONSENT OF GALLOWAY. COPYRIGHTS AND INFRINGEMENTS WILL BE ENFORCED AND PROSECUTED.

CONSTRUCTION DOCUMENTS
CONSTITUTION STORAGE
JOHNSON DEVELOPMENT ASSOCIATES
6855 CONSTITUTION AVENUE
COLORADO SPRINGS, CO 80915

#	Date	Issue / Description	Init.

Project No:	JDA02
Drawn By:	BLB
Checked By:	BAS
Date:	4/22/2022

COVER SHEET

G0.0

STANDARD NOTES FOR GEC PLANS

1. STORMWATER DISCHARGES FROM CONSTRUCTION SITES SHALL NOT CAUSE OR THREATEN TO CAUSE POLLUTION, CONTAMINATION, OR DEGRADATION OF STATE WATERS. ALL WORK AND EARTH DISTURBANCE SHALL BE DONE IN A MANNER THAT MINIMIZES POLLUTION OF ANY ON-SITE OR OFFSITE WATERS, INCLUDING WETLANDS.

2. NOTWITHSTANDING ANYTHING DEPICTED IN THESE PLANS IN WORDS OR GRAPHIC REPRESENTATION, ALL DESIGN AND CONSTRUCTION RELATED TO ROADS, STORM DRAINAGE AND EROSION CONTROL SHALL CONFORM TO THE STANDARDS AND REQUIREMENTS OF THE MOST RECENT VERSION OF THE RELEVANT ADOPTED EL PASO COUNTY STANDARDS, INCLUDING THE LAND DEVELOPMENT CODE, THE ENGINEERING CRITERIA MANUAL, THE DRAINAGE CRITERIA MANUAL, AND THE DRAINAGE CRITERIA MANUAL VOLUME 2. ANY DEVIATIONS TO REGULATIONS AND STANDARDS MUST BE REQUESTED, AND APPROVED, IN WRITING.

3. A SEPARATE STORMWATER MANAGEMENT PLAN (SWMP) FOR THIS PROJECT SHALL BE COMPLETED AND AN EROSION AND STORMWATER QUALITY CONTROL PERMIT (ESQCP) ISSUED PRIOR TO COMMENCING CONSTRUCTION. DURING CONSTRUCTION THE SWMP IS THE RESPONSIBILITY OF THE DESIGNATED QUALIFIED STORMWATER MANAGER OR CERTIFIED EROSION CONTROL INSPECTOR AND SHALL BE LOCATED ON SITE AT ALL TIMES DURING CONSTRUCTION AND SHALL BE KEPT UP TO DATE WITH WORK PROGRESS AND CHANGES IN THE FIELD.

4. ONCE THE ESQCP IS APPROVED AND A NOTICE TO PROCEED'HAS BEEN ISSUED, THE CONTRACTOR MAY INSTALL THE INITIAL STAGE EROSION AND SEDIMENT CONTROL MEASURES AS INDICATED ON THE APPROVED GEC. A PRECONSTRUCTION MEETING BETWEEN THE CONTRACTOR, ENGINEER, AND EL PASO COUNTY WILL BE HELD PRIOR TO ANY CONSTRUCTION. IT IS THE RESPONSIBILITY OF THE APPLICANT TO COORDINATE THE MEETING TIME AND PLACE WITH COUNTY STAFF.

5. CONTROL MEASURES MUST BE INSTALLED PRIOR TO COMMENCEMENT OF ACTIVITIES THAT MAY CONTRIBUTE POLLUTANTS TO STORMWATER. TEMPORARY SEDIMENT AND EROSION CONTROL MEASURES FOR ALL SLOPES, CHANNELS, DITCHES, OR ANY DISTURBED LAND AREA SHALL BE COMPLETED IMMEDIATELY UPON COMPLETION OF THE DISTURBANCE.

6. ALL TEMPORARY SEDIMENT AND EROSION CONTROL MEASURES SHALL BE MAINTAINED AND REMAIN IN EFFECTIVE OPERATING CONDITION UNTIL PERMANENT SOIL EROSION CONTROL MEASURES ARE IMPLEMENTED AND FINAL STABILIZATION IS ESTABLISHED. ALL PERSONS ENGAGED IN LAND DISTURBANCE ACTIVITIES SHALL ASSESS THE ADEQUACY OF CONTROL MEASURES AT THE SITE AND IDENTIFY IF CHANGES TO THOSE CONTROL MEASURES IS NEEDED TO ENSURE THE CONTINUED EFFECTIVE PERFORMANCE OF THE CONTROL MEASURES. ALL CHANGES TO TEMPORARY SEDIMENT AND EROSION CONTROL MEASURES MUST BE INCORPORATED INTO THE STORMWATER MANAGEMENT PLAN PRIOR TO IMPLEMENTATION.

7. TEMPORARY STABILIZATION SHALL BE IMPLEMENTED ON DISTURBED AREAS AND STOCKPILES WHERE GROUND DISTURBING CONSTRUCTION ACTIVITY HAS PERMANENTLY CEASED OR TEMPORARILY CEASED FOR LONGER THAN 14 DAYS. AN AREA THAT IS GOING TO REMAIN IN AN INTERIM STATE FOR MORE THAN 60 DAYS SHALL ALSO BE STABILIZED.

8. FINAL STABILIZATION MUST BE IMPLEMENTED AT ALL APPLICABLE CONSTRUCTION SITES. FINAL STABILIZATION IS ACHIEVED WHEN ALL GROUND DISTURBING ACTIVITIES ARE COMPLETE AND ALL DISTURBED AREAS EITHER HAVE A UNIFORM VEGETATIVE COVER WITH INDIVIDUAL PLAN DENSITY OF 70 PERCENT OF PRE-DISTURBANCE LEVELS ESTABLISHED OR EQUIVALENT PERMANENT ALTERNATIVE STABILIZATION METHOD IS IMPLEMENTED. ALL TEMPORARY SEDIMENT AND EROSION CONTROL MEASURES SHALL BE REMOVED UPON FINAL STABILIZATION AND BEFORE PERMIT CLOSURE.

9. ALL PERMANENT STORMWATER MANAGEMENT FACILITIES SHALL BE INSTALLED AS DEFINED IN THE APPROVED PLANS. ANY PROPOSED CHANGES THAT EFFECT THE HYDROLOGY OR HYDRAULICS OF A PERMANENT STORMWATER MANAGEMENT STRUCTURES MUST BE APPROVED BY THE ECM ADMINISTRATOR PRIOR TO IMPLEMENTATION.

10. EARTH DISTURBANCES SHALL BE CONDUCTED IN SUCH A MANNER SO AS TO EFFECTIVELY MINIMIZE ACCELERATED SOIL EROSION AND RESULTING SEDIMENTATION. ALL DISTURBANCES SHALL BE DESIGNED, CONSTRUCTED, AND COMPLETED SO THAT THE EXPOSED AREA OF ANY DISTURBED LAND SHALL BE LIMITED TO THE SHORTEST PRACTICAL PERIOD OF TIME. PRE-EXISTING VEGETATION SHALL BE PROTECTED AND MAINTAINED WITHIN 50 HORIZONTAL FEET OF A WATERS OF THE STATE UNLESS SHOWN TO BE INFEASIBLE AND SPECIFICALLY REQUESTED AND APPROVED.

11. COMPACTION OF SOIL MUST BE PREVENTED IN AREAS DESIGNATED FOR INFILTRATION CONTROL MEASURES OR WHERE FINAL STABILIZATION WILL BE ACHIEVED BY VEGETATIVE COVER. AREAS DESIGNATED FOR INFILTRATION CONTROL SHALL ALSO BE PROTECTED FROM SEDIMENTATION DURING CONSTRUCTION UNTIL FINAL STABILIZATION IS ACHIEVED.

12. ANY TEMPORARY OR PERMANENT FACILITY DESIGNED AND CONSTRUCTED FOR THE CONVEYANCE OF STORMWATER AROUND, THROUGH, OR FROM THE EARTH DISTURBANCE AREA SHALL BE A STABILIZED CONVEYANCE DESIGNED TO MINIMIZE EROSION AND THE DISCHARGE OF SEDIMENT OFF SITE.

13. CONCRETE WASH WATER SHALL BE CONTAINED AND DISPOSED OF IN ACCORDANCE WITH THE SWMP. NO WASH WATER SHALL BE DISCHARGED TO OR ALLOWED TO RUNOFF TO STATE WATERS, INCLUDING ANY SURFACE OR SUBSURFACE STORM DRAINAGE SYSTEM OR FACILITIES. CONCRETE WASHOUT SHALL NOT BE LOCATED IN AN AREA WHERE SHALLOW GROUNDWATER MAY BE PRESENT, OR WITHIN 50 FEET OF A SURFACE WATER BODY.

14. DURING DEWATERING OPERATIONS OF UNCONTAMINATED GROUND WATER MAY BE DISCHARGED ON SITE, BUT SHALL NOT LEAVE THE SITE IN THE FORM OF SURFACE RUNOFF UNLESS AN APPROVED STATE DEWATERING PERMIT IS IN PLACE.

15. EROSION CONTROL BLANKETING OR OTHER PROTECTIVE COVERING SHALL BE USED ON SLOPES STEEPER THAN 3:1.

16. CONTRACTOR SHALL BE RESPONSIBLE FOR THE REMOVAL OF ALL WASTES FROM THE CONSTRUCTION SITE FOR DISPOSAL IN ACCORDANCE WITH LOCAL AND STATE REGULATORY REQUIREMENTS. NO CONSTRUCTION DEBRIS, TREE SLASH, BUILDING MATERIAL WASTES OR UNUSED BUILDING MATERIALS SHALL BE BURIED, DUMPED, OR DISCHARGED AT THE SITE.

17. WASTE MATERIALS SHALL NOT BE TEMPORARILY PLACED OR STORED IN THE STREET, ALLEY, OR OTHER PUBLIC WAY, UNLESS IN ACCORDANCE WITH AN APPROVED TRAFFIC CONTROL PLAN. CONTROL MEASURES MAY BE REQUIRED BY EL PASO COUNTY ENGINEERING IF DEEMED NECESSARY, BASED ON SPECIFIC CONDITIONS AND CIRCUMSTANCES.

18. TRACKING OF SOILS AND CONSTRUCTION DEBRIS OFF-SITE SHALL BE MINIMIZED. MATERIALS TRACKED OFF-SITE SHALL BE CLEANED UP AND PROPERLY DISPOSED OF IMMEDIATELY.

19. THE OWNER/DEVELOPER SHALL BE RESPONSIBLE FOR THE REMOVAL OF ALL CONSTRUCTION DEBRIS, DIRT, TRASH, ROCK, SEDIMENT, AND SAND THAT MAY ACCUMULATE IN ROADS, STORM DRAINS AND OTHER DRAINAGE CONVEYANCE SYSTEM AND STORMWATER APPURTENANCES AS A RESULT OF SITE DEVELOPMENT.

20. THE QUANTITY OF MATERIALS STORED ON THE PROJECT SITE SHALL BE LIMITED, AS MUCH AS PRACTICAL, TO THAT QUANTITY REQUIRED TO PERFORM THE WORK IN AN ORDERLY SEQUENCE. ALL MATERIALS STORED ON-SITE SHALL BE STORED IN A NEAT, ORDERLY MANNER, IN THEIR ORIGINAL CONTAINERS, WITH ORIGINAL MANUFACTURER'S LABELS.

21. NO CHEMICALS ARE TO BE USED BY THE CONTRACTOR, WHICH HAVE THE POTENTIAL TO BE RELEASED IN STORMWATER UNLESS PERMISSION FOR THE USE OF A SPECIFIC CHEMICAL IS GRANTED IN WRITING BY THE ECM ADMINISTRATOR. IN GRANTING THE USE OF SUCH CHEMICALS, SPECIAL CONDITIONS AND MONITORING MAY BE REQUIRED.

22. BULK STORAGE OF PETROLEUM PRODUCTS OR OTHER LIQUID CHEMICALS IN EXCESS OF 55 GALLONS SHALL HAVE ADEQUATE SECONDARY CONTAINMENT PROTECTION TO CONTAIN ALL SPILLS AND PREVENT ANY SPILLED MATERIAL FROM ENTERING STATE WATERS, INCLUDING ANY SURFACE OR SUBSURFACE STORM DRAINAGE SYSTEM OR FACILITIES.

23. NO PERSON SHALL CAUSE THE IMPEDIMENT OF STORMWATER FLOW IN THE FLOW LINE OF THE CURB AND GUTTER OR DITCH EXCEPT WITH APPROVED SEDIMENT CONTROL MEASURES.

24. INDIVIDUALS SHALL COMPLY WITH THE COLORADO WATER QUALITY CONTROL ACT (TITLE 25, ARTICLE 8, CRS), AND THE 'CLEAN WATER ACT' (33 USC 1344), IN ADDITION TO THE REQUIREMENTS INCLUDED IN THE DCM VOLUME II AND THE ECM APPENDIX I. ALL APPROPRIATE PERMITS MUST BE OBTAINED BY THE CONTRACTOR PRIOR TO CONSTRUCTION (NPDES, FLOODPLAIN, 404, FUGITIVE DUST, ETC.). IN THE EVENT OF CONFLICTS BETWEEN THESE REQUIREMENTS AND LAWS, RULES, OR REGULATIONS OF OTHER FEDERAL, STATE, OR COUNTY AGENCIES, THE MORE RESTRICTIVE LAWS, RULES, OR REGULATIONS SHALL APPLY.

25. ALL CONSTRUCTION TRAFFIC MUST ENTER/EXIT THE SITE AT APPROVED CONSTRUCTION ACCESS POINTS.

26. PRIOR TO ACTUAL CONSTRUCTION THE PERMITEE SHALL VERIFY THE LOCATION OF EXISTING UTILITIES.

27. A WATER SOURCE SHALL BE AVAILABLE ON SITE DURING EARTHWORK OPERATIONS AND UTILIZED AS REQUIRED TO MINIMIZE DUST FROM EARTHWORK EQUIPMENT AND WIND.

28. THE SOILS REPORT, TITLED "CIMARRON NORTHCREST NO. 3, COLORADO SPRINGS, COLORADO" FOR THIS SITE HAS BEEN PREPARED BY ROCKY MOUNTAIN GEOTECHNICAL, INC., DATED DECEMBER 28, 1982 AND SHALL BE CONSIDERED A PART OF THESE PLANS.

29. AT LEAST TEN (10) DAYS PRIOR TO THE ANTICIPATED START OF CONSTRUCTION, FOR PROJECTS THAT WILL DISTURB 1 ACRE OR MORE, THE OWNER OR OPERATOR OF CONSTRUCTION ACTIVITY SHALL SUBMIT A PERMIT APPLICATION FOR STORMWATER DISCHARGE TO THE COLORADO DEPARTMENT OF PUBLIC HEALTH AND ENVIRONMENT, WATER QUALITY DIVISION. THE APPLICATION CONTAINS CERTIFICATION OF COMPLETION OF A STORMWATER MANAGEMENT PLAN (SWMP), OF WHICH THIS GRADING AND EROSION CONTROL PLAN MAY BE A PART. FOR INFORMATION OR APPLICATION MATERIALS CONTACT:

COLORADO DEPARTMENT OF PUBLIC HEALTH AND ENVIRONMENT
WATER QUALITY CONTROL DIVISION
WQCD -PERMITS
4300 CHERRY CREEK DRIVE SOUTH
DENVER, CO 80246-1530
ATTN: PERMITS UNIT

STANDARD NOTES FOR CONSTRUCTION PLANS

1. ALL DRAINAGE AND ROADWAY CONSTRUCTION SHALL MEET THE STANDARDS AND SPECIFICATIONS OF THE CITY OF COLORADO SPRINGS/EL PASO COUNTY DRAINAGE CRITERIA MANUAL, VOLUMES 1 AND 2, AND THE EL PASO COUNTY ENGINEERING CRITERIA MANUAL.

2. CONTRACTOR SHALL BE RESPONSIBLE FOR THE NOTIFICATION AND FIELD NOTIFICATION OF ALL EXISTING UTILITIES, WHETHER SHOWN ON THE PLANS OR NOT, BEFORE BEGINNING CONSTRUCTION. LOCATION OF EXISTING UTILITIES SHALL BE VERIFIED BY THE CONTRACTOR PRIOR TO CONSTRUCTION. CALL 811 TO CONTACT THE UTILITY NOTIFICATION CENTER OF COLORADO (UNCC).

3. CONTRACTOR SHALL KEEP A COPY OF THESE APPROVED PLANS, THE GRADING AND EROSION CONTROL PLAN, THE STORMWATER MANAGEMENT PLAN (SWMP), THE SOILS AND GEOTECHNICAL REPORT, AND THE APPROPRIATE DESIGN AND CONSTRUCTION STANDARDS AND SPECIFICATIONS AT THE JOB SITE AT ALL TIMES, INCLUDING THE FOLLOWING:
   A. EL PASO COUNTY ENGINEERING CRITERIA MANUAL (ECM)
   B. CITY OF COLORADO SPRINGS/EL PASO COUNTY DRAINAGE CRITERIA MANUAL, VOLUMES 1 AND 2
   C. COLORADO DEPARTMENT OF TRANSPORTATION (CDOT) STANDARD SPECIFICATIONS FOR ROAD AND BRIDGE CONSTRUCTION
   D. CDOT M & S STANDARDS

4. NOTWITHSTANDING ANYTHING DEPICTED IN THESE PLANS IN WORDS OR GRAPHIC REPRESENTATION, ALL DESIGN AND CONSTRUCTION RELATED TO ROADS, STORM DRAINAGE AND EROSION CONTROL SHALL CONFORM TO THE STANDARDS AND REQUIREMENTS OF THE MOST RECENT VERSION OF THE RELEVANT ADOPTED EL PASO COUNTY STANDARDS, INCLUDING THE LAND DEVELOPMENT CODE, THE ENGINEERING CRITERIA MANUAL, THE DRAINAGE CRITERIA MANUAL, AND THE DRAINAGE CRITERIA MANUAL VOLUME 2. ANY DEVIATIONS FROM REGULATIONS AND STANDARDS MUST BE REQUESTED, AND APPROVED, IN WRITING. ANY MODIFICATIONS NECESSARY TO MEET CRITERIA AFTER-THE-FACT WILL BE ENTIRELY THE DEVELOPER'S RESPONSIBILITY TO RECTIFY.

5. IT IS THE DESIGN ENGINEER'S RESPONSIBILITY TO ACCURATELY SHOW EXISTING CONDITIONS, BOTH ONSITE AND OFFSITE, ON THE CONSTRUCTION PLANS. ANY MODIFICATIONS NECESSARY DUE TO CONFLICTS, OMISSIONS, OR CHANGED CONDITIONS WILL BE ENTIRELY THE DEVELOPER'S RESPONSIBILITY TO RECTIFY.

6. CONTRACTOR SHALL SCHEDULE A PRE-CONSTRUCTION MEETING WITH EL PASO COUNTY PLANNING AND COMMUNITY DEVELOPMENT (PCD) – INSPECTIONS, PRIOR TO STARTING CONSTRUCTION.

7. IT IS THE CONTRACTOR'S RESPONSIBILITY TO UNDERSTAND THE REQUIREMENTS OF ALL JURISDICTIONAL AGENCIES AND TO OBTAIN ALL REQUIRED PERMITS, INCLUDING BUT NOT LIMITED TO EL PASO COUNTY EROSION AND STORMWATER QUALITY CONTROL PERMIT (ESQCP), REGIONAL BUILDING FLOODPLAIN DEVELOPMENT PERMIT, U.S. ARMY CORPS OF ENGINEERS-ISSUED 401 AND/OR 404 PERMITS, AND COUNTY AND STATE FUGITIVE DUST PERMITS.

8. CONTRACTOR SHALL NOT DEVIATE FROM THE PLANS WITHOUT FIRST OBTAINING WRITTEN APPROVAL FROM THE DESIGN ENGINEER AND PCD. CONTRACTOR SHALL NOTIFY THE DESIGN ENGINEER IMMEDIATELY UPON DISCOVERY OF ANY ERRORS OR INCONSISTENCIES.

9. ALL STORM DRAIN PIPE SHALL BE CLASS III RCP UNLESS OTHERWISE NOTED AND APPROVED BY PCD.

10. CONTRACTOR SHALL COORDINATE GEOTECHNICAL TESTING PER ECM STANDARDS. PAVEMENT DESIGN SHALL BE APPROVED BY EL PASO COUNTY PCD PRIOR TO PLACEMENT OF CURB AND GUTTER AND PAVEMENT.

11. ALL CONSTRUCTION TRAFFIC MUST ENTER/EXIT THE SITE AT APPROVED CONSTRUCTION ACCESS POINTS.

12. SIGHT VISIBILITY TRIANGLES AS IDENTIFIED IN THE PLANS SHALL BE PROVIDED AT ALL INTERSECTIONS. OBSTRUCTIONS GREATER THAN 18 INCHES ABOVE FLOWLINE ARE NOT ALLOWED WITHIN SIGHT TRIANGLES.

13. SIGNING AND STRIPING SHALL COMPLY WITH EL PASO COUNTY DOT AND MUTCD CRITERIA. [IF APPLICABLE, ADDITIONAL SIGNING AND STRIPING NOTES WILL BE PROVIDED.]

14. CONTRACTOR SHALL OBTAIN ANY PERMITS REQUIRED BY EL PASO COUNTY DOT, INCLUDING WORK WITHIN THE RIGHT-OF-WAY AND SPECIAL TRANSPORT PERMITS.

15. THE LIMITS OF CONSTRUCTION SHALL REMAIN WITHIN THE PROPERTY LINE UNLESS OTHERWISE NOTED. THE OWNER/DEVELOPER SHALL OBTAIN WRITTEN PERMISSION AND EASEMENTS, WHERE REQUIRED, FROM ADJOINING PROPERTY OWNER(S) PRIOR TO ANY OFF-SITE DISTURBANCE, GRADING, OR CONSTRUCTION.

EROSION CONTROL NOTES

1. AT LEAST TEN DAYS PRIOR TO THE ANTICIPATED START OF CONSTRUCTION, FOR PROJECTS THAT WILL DISTURB 1 ACRE OR MORE, THE OWNER OR OPERATOR OF THE CONSTRUCTION ACTIVITY SHALL SUBMIT A PERMIT APPLICATION FOR STORMWATER DISCHARGE TO THE COLORADO DEPARTMENT OF PUBLIC HEALTH AND ENVIRONMENT, WATER QUALITY CONTROL DIVISION. THE APPLICATION CONTAINS CERTIFICATION OF COMPLETION OF A STORMWATER MANAGEMENT PLAN (SWMP), OF WHICH THIS GRADING AND EROSION CONTROL PLAN MAY BE A PART. FOR INFORMATION OR APPLICATION MATERIALS CONTACT:

   COLORADO DEPARTMENT OF PUBLIC HEALTH AND ENVIRONMENT
   WATER QUALITY CONTROL DIVISION
   WQCD – PERMITS
   4300 CHERRY CREEK DRIVE SOUTH
   DENVER, CO 80246-1530
   ATTN: PERMITS UNIT

2. SOIL EROSION CONTROL MEASURES FOR ALL SLOPES, CHANNELS, DITCHES, OR ANY DISTURBED LAND AREA SHALL BE COMPLETED WITHIN TWENTY-ONE (21) CALENDAR DAYS AFTER FINAL GRADING, OR FINAL EARTH DISTURBANCE HAS BEEN COMPLETED. DISTURBED AREAS AND STOCKPILES WHICH ARE NOT AT FINAL GRADE BUT WILL REMAIN DORMANT FOR LONGER THAN 30 DAYS SHALL ALSO BE MULCHED WITHIN 21 DAYS AFTER INTERIM GRADING. AN AREA THAT IS GOING TO REMAIN IN AN INTERIM STATE FOR MORE THAN 60 DAYS SHALL ALSO BE SEEDED. ALL TEMPORARY SOIL EROSION CONTROL MEASURES AND BMPS SHALL BE MAINTAINED UNTIL PERMANENT SOIL EROSION CONTROL MEASURES ARE IMPLEMENTED.

3. CONSTRUCTION FENCE AND SILT FENCE OFFSET FOR CLARITY. CONTRACTOR TO ENSURE BMPS ARE PLACED DOWNSTREAM OF DISTURBED AREAS TO PREVENT SEDIMENT FROM LEAVING THE SITE.

4. BENT GRASS MEADOWS DRIVE SHALL BE STREET SWEPT AND INSPECTED ON A REGULAR BASIS DURING CONSTRUCTION.

5. NO NOTABLE EXISTING VEGETATION EXISTS ON THE SITE, APART FROM NATIVE GRASSES AND WEEDS. THE EXISTING SOIL TYPES WITHIN THE PROPERTY CONSISTS OF COLUMBINE GRAVELLY SANDY LOAM, BLAKELAND-FLUVAQUENTIC HAPLAQUOLLS, AND BLAKELAND LOAMY SAND. ALL SOILS ARE DEFINED AS HAVING A HYDROLOGIC SOIL GROUP OF A, AS DETERMINED BY THE NRCS WEB SOIL SURVEY FOR EL PASO COUNTY AREA.

GENERAL CONSTRUCTION NOTES

1. IT SHALL BE THE RESPONSIBILITY OF THE CONTRACTOR TO VERIFY THE EXISTENCE AND LOCATION OF ALL UNDERGROUND UTILITIES ALONG THE ROUTE OF THE WORK. THE OMISSION FROM OR THE INCLUSION OF UTILITY LOCATIONS ON THE PLANS IS NOT TO BE CONSIDERED AS THE NONEXISTENCE OF OR A DEFINITE LOCATION OF EXISTING UNDERGROUND UTILITIES.

2. THE CONTRACTOR SHALL TAKE THE NECESSARY PRECAUTIONS TO PROTECT EXISTING UTILITIES FROM DAMAGE DUE TO THIS OPERATION. ANY DAMAGE TO THE UTILITIES WILL BE REPLACED AT THE CONTRACTORS EXPENSE AND ANY SERVICE DISRUPTION WILL BE SETTLED BY THE CONTRACTOR.

3. ADDITIONAL EROSION CONTROL STRUCTURES MAY BE REQUIRED AT THE TIME OF CONSTRUCTION.

4. ALL BACKFILL, SUB-BASE AND / OR BASE COURSE (CLASS 6) MATERIAL SHALL BE COMPACTED TO THE SOILS ENGINEERS RECOMMENDATIONS, AND APPROVED BY EL PASO COUNTY DEVELOPMENT SERVICES ENGINEERING DIVISION.

5. ALL STATIONING IS CENTERLINE UNLESS OTHERWISE INDICATED. ALL ELEVATIONS ARE FLOW LINE UNLESS OTHERWISE INDICATED.

6. ALL DISTURBED PAVEMENT EDGES SHALL BE CUT TO NEAT LINES. REPAIR SHALL CONFORM TO THE EPC ECM APPENDIX K – 1.2C.

7. ALL INTERSECTION ACCESSES TO BE CONSTRUCTED WITH A 25 FOOT SIGHT VISIBILITY TRIANGLES AND THERE SHALL BE NO OBSTRUCTIONS GREATER THAN 18" IN THIS AREA.

8. ALL CULVERT AND STORM PIPES SHALL BE SMOOTH INTERIOR CORRUGATED POLYETHYLENE PIPE (HDPE), OR REINFORCED CONCRETE PIPE (RCP), ALL CULVERTS SHALL BE PLACED COMPLETE WITH FLARED END SECTIONS. ADEQUACY OF MATERIAL THICKNESS FOR ANY CSP INSTALLED SHALL BE VERIFIED BY OWNERS GEOTECHNICAL ENGINEER TO SUPPORT MINIMUM 50 YEAR DESIGN LIFE. CULVERTS MUST CONFORM TO EPC ECM SECTION 3.32 – CULVERTS.

9. ASPHALT THICKNESS AND BASE COURSE THICKNESS (COMPACTED FOR ROADS SHALL BE PER DESIGN REPORT BY OWNERS GEOTECHNICAL ENGINEER. OWNERS GEOTECHNICAL ENGINEER TO BE ON SITE AT TIME OF ROAD CONSTRUCTION TO EVALUATE SOIL CONDITIONS AND DETERMINE IF ADDITIONAL MEASURES ARE NECESSARY TO ASSURE STABILITY OF THE NEW ROADS. PAVEMENT DESIGN SHALL BE APPROVED BY EL PASO COUNTY DEVELOPMENT SERVICES ENGINEERING DIVISION PRIOR TO CONSTRUCTION.

10. TYPE M RIP-RAP WITH 4" OF TYPE II GRANULAR BEDDING AND MIRAFI 180N OR EQUAL MAY BE SUBSTITUTED WHERE TYPE L RIP-RAP WITH MIRAFI FW 700 OR EQUAL IS SPECIFIED.

11. ALL MATERIALS AND INSTALLATION PROCEDURES SHALL BE IN COMPLIANCE WITH ANY AND ALL APPLICABLE EL PASO COUNTY STANDARDS AND WITH WOODMAN HILLS METRO DISTRICT CONSULTING ENGINEER APPROVAL.

12. ALL POTABLE WATER MAINS SHALL BE AWWA C900-SDR18 PVC WITH PUSH-ON SINGLE GASKET TYPE JOINTS AND SHALL MEET THE REQUIREMENTS OF ANSI / NSF 61.

13. ALL WATER MAIN FITTINGS SHALL BE MADE FROM GRAY-IRON OR DUCTILE IRON AND FURNISHED WITH MECHANICAL JOINT ENDS. ALL FITTINGS SHALL HAVE A PRESSURE RATING OF 250 PSI AND SHALL MEET THE REQUIREMENTS OF ANSI / NSF 61.

14. ALL WATER LINE BENDS, TEES, BLOW-OFFS AND PLUGS AT DEAD-END MAINS SHALL BE PROTECTED FROM THRUST BY USING CONCRETE THRUST BLOCKS AND / OR RODDING AND RESTRAINED PIPE PER THE WOODMEN HILLS METRO DISTRICT CONSULTING ENGINEER APPROVAL.

15. MAXIMUM DEFLECTION OF 8" OR 12" PVC WATER MAIN JOINTS IS 4 DEGREES. CORRESPONDING MINIMUM CURVE RADIUS IS 286'. ADDITIONAL 11.25° OR 22.5° BENDS MAY BE REQUIRED FOR PROPER ALIGNMENT.

16. CONTRACTOR IS RESPONSIBLE FOR PROVIDING DETAILED AS-BUILTS OF ALL WATER MAIN, STORM SEWER AND SANITARY SEWER MAIN INSTALLATIONS, INCLUDING ACCURATE DISTANCES OF MAIN LINES, VALVES, FITTINGS, MANHOLES AND LOCATIONS OF WATER AND SEWER SERVICES.

17. SANITARY SEWER PIPE AND FITTINGS: PVC 4" – 8" ASTM D3034, TYPE PSM, SDR 35: PUSH-ON JOINTS AND MOLDED RUBBER GASKETS MAXIMUM HORIZONTAL DEFLECTIONS, AFTER INSTALLATION AND BACK FILLING SHALL NOT EXCEED 3% OF THE PIPE DIAMETER. (MINIMUM CURVE RADIUS IS 100' FOR 8" PVC SANITARY SEWER MAIN)

Galloway
6162 S. Willow Drive, Suite 320
Greenwood Village, CO 80111
303.770.8884
GallowayUS.com

COPYRIGHT
THESE PLANS ARE AN INSTRUMENT OF SERVICE AND ARE THE PROPERTY OF GALLOWAY, AND MAY NOT BE DUPLICATED, DISCLOSED, OR REPRODUCED WITHOUT THE WRITTEN CONSENT OF GALLOWAY. COPYRIGHTS AND INFRINGEMENTS WILL BE ENFORCED AND PROSECUTED.

CONSTRUCTION DOCUMENTS
CONSTITUTION STORAGE

JOHNSON DEVELOPMENT ASSOCIATES

6855 CONSTITUTION AVENUE
COLORADO SPRINGS, CO 80915

#	Date	Issue / Description	Init.

Project No:	JDA02
Drawn By:	BLB
Checked By:	BAS
Date:	Submittal Date

GRADING & EROSION CONTROL NOTES

G0.1

Unresolved. Provide details for water quality pond in gec plan or provide separate construction drawings.

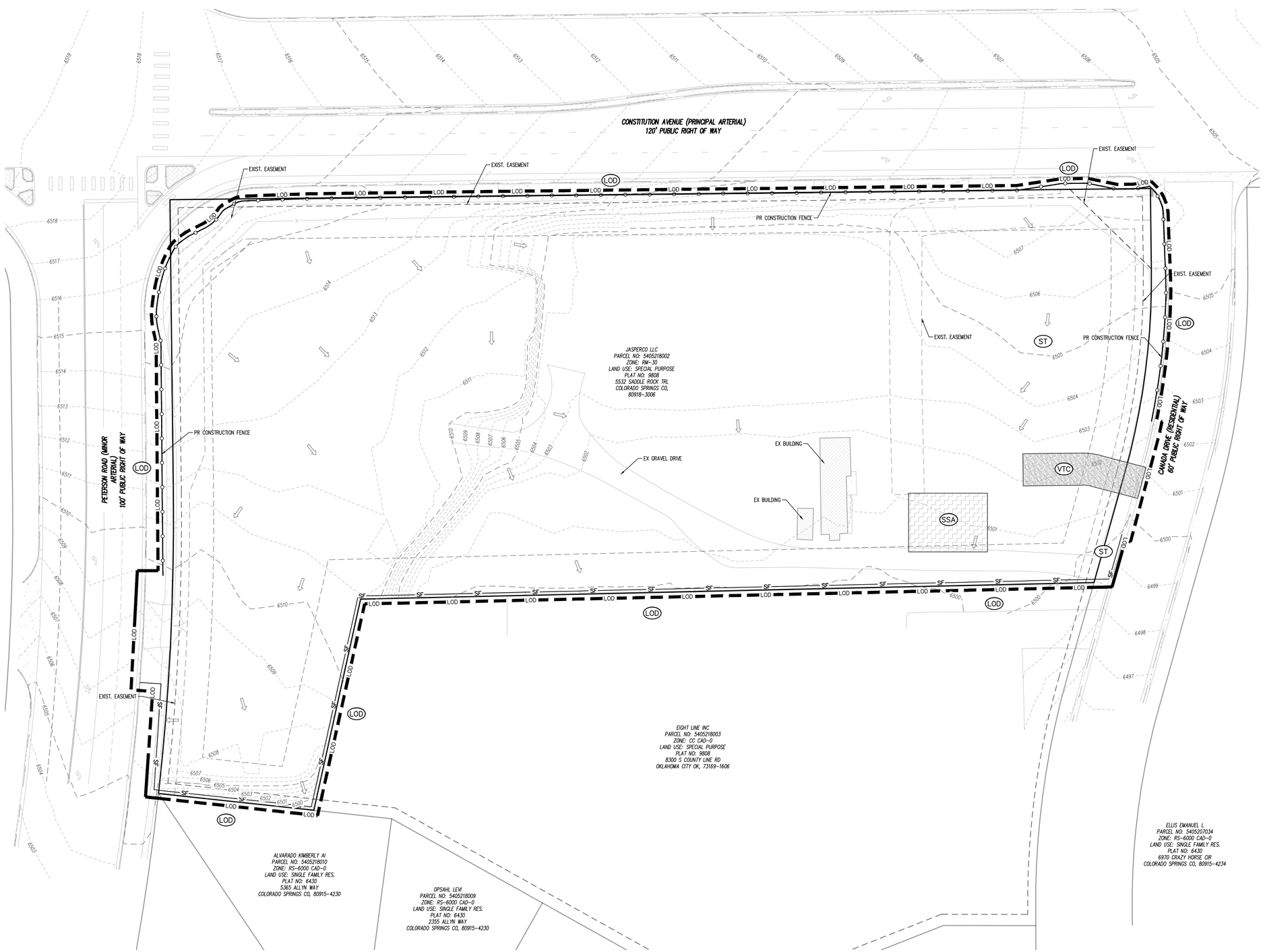

N

0 15 30

SCALE: 1"=30'

EROSION CONTROL PHASING SCHEDULE

PHASE	DESCRIPTION
INITIAL	INSTALL SILT & CONSTRUCTION FENCE.
INTERIM	CONVERT EXISTING SEDIMENT BASIN FROM "EARLY GRADING & EROSION CONTROL PLANS" TO THE PROPOSED WATER QUALITY CAPTURE VOLUME DETENTION BASIN W/ ALL PERMANENT CONTROL MEASURES. THEN, INSTALL STABILIZED STAGING AREA, VEHICLE TRACKING CONTROL AT ENTRANCES, AND CONCRETE WASHOUT AREA. THEN OVERLOT GRADE THE ENTIRE PROJECT SITE AS SHOWN ON PLAN VIEW, INSTALL CHECK DAMS ALONG PROPOSED SWALES. FINALLY, INSTALL PROPOSED STORM SEWER. CONTRACTOR TO USE EXTREME CAUTION TO NOT DAMAGE THE WATER AND WASTEWATER IMPROVEMENTS COMPLETED IN THE EARLY METRO DISTRICT IMPROVEMENTS PLAN SET.
FINAL	CONSTRUCT CURB/GUTTER AND PAVEMENT. CONSTRUCT GAS/ELECTRIC/CABLE/PHONE IN ROW AREAS. REMOVE CONSTRUCTION BMP'S ONCE VERTICAL CONSTRUCTION OF HOUSES AND APPLICABLE LANDSCAPING IS COMPLETE.

LEGEND

- EXISTING PROPERTY LINE (PROJECT BOUNDARY)
- EXISTING PROPERTY LINE
- EXISTING CENTER LINE
- PROPOSED CENTER LINE
- EXISTING RIGHT OF WAY LINE
- EXISTING CONCRETE PAVING
- EXISTING GRAVEL ROAD
- PROPOSED CONSTRUCTION FENCE
- EXISTING EASEMENT
- 6940 EXISTING MAJOR CONTOUR
- 6941 EXISTING MINOR CONTOUR
- W EXISTING WATER LINE
- SS EXISTING SANITARY SEWER LINE
- EXISTING DRAINAGE FEATURE OUTLINE
- EXISTING SWALE WITH FLOW DIRECTION
- FO EXISTING FIBER OPTIC
- UE EXISTING UNDERGROUND ELECTRIC

EROSION CONTROL LEGEND

- LOD — LIMITS OF DISTURBANCE/ CONSTRUCTION SITE BOUNDARY
- SF — SILT FENCE
- ST — SEDIMENT TRAP
- VTC — VEHICLE TRACKING CONTROL
- SSA — STABILIZED STAGING AREA
- EXISTING FLOW

NOTES

1. THE PLAN SHALL NOT SUBSTANTIALLY CHANGE THE DEPTH OF COVER, OR ACCESS TO UTILITY FACILITIES. ADDITIONALLY, THE PLAN SHALL NOT INCREASE OR DIVERT WATER TOWARDS UTILITY FACILITIES. ANY CHANGES TO UTILITY FACILITIES TO ACCOMMODATE THE PLAN, MUST BE DISCUSSED AND AGREED TO BY THE AFFECTED UTILITY PRIOR TO IMPLEMENTING THE PLAN. THE RESULTING COST TO RELOCATE OR PROTECT UTILITIES, OR PROVIDE INTERIM ACCESS IS AT THE EXPENSE OF THE PLAN APPLICANT.

BASIS OF BEARINGS

BASIS OF BEARING: ALL BEARINGS ARE GRID BEARINGS OF THE COLORADO STATE PLANE COORDINATE SYSTEM, CENTRAL ZONE, NORTH AMERICAN DATUM 1983. THE NORTH LINE OF THE NORTHWEST QUARTER OF SECTION 5, TOWNSHIP 14 SOUTH, RANGE 65 WEST BEARS N89°20'41"E, MONUMENTED BY THE NORTHWEST CORNER OF SAID SECTION 5, BEING A 3-1/4" ALUMINUM CAP STAMPED "PLS 4842 1985" IN RANGE BOX, AND BY THE NORTH QUARTER CORNER OF SAID SECTION 5, BEING A 3-1/4" ALUMINUM CAP STAMPED "PLS 30829 2003", AS SHOWN HEREON.

BENCHMARK

COLORADO SPRINGS UTILITIES FACILITIES INFORMATION MANAGEMENT SYSTEM (FIMS) BENCHMARK SR07 BEING A 2" ALUMINUM CAP STAMPED "CSU FIMS CONTROL SR07" AT THE SOUTHEAST CORNER OF THE CONCRETE BASE FOR AN ELECTRIC VAULT ON THE WEST SIDE OF PETERSON ROAD, ABOUT 360' SOUTH OF THE CENTER LINE OF LEOTI DRIVE.

FIMS DATUM ELEVATION = 6534.61

CAUTION – NOTICE TO CONTRACTOR

1. ALL UTILITY LOCATIONS SHOWN ARE BASED ON MAPS PROVIDED BY THE APPROPRIATE UTILITY COMPANY AND FIELD SURFACE EVIDENCE AT THE TIME OF SURVEY AND IS TO BE CONSIDERED AN APPROXIMATE LOCATION ONLY. IT IS THE CONTRACTOR'S RESPONSIBILITY TO FIELD VERIFY THE LOCATION OF ALL UTILITIES, PUBLIC OR PRIVATE, WHETHER SHOWN ON THE PLANS OR NOT, PRIOR TO CONSTRUCTION. REPORT ANY DISCREPANCIESTO THE ENGINEER PRIOR TO CONSTRUCTION.

811 Know what's **below.** **Call** before you dig.

2. WHERE A PROPOSED UTILITY CROSSES AN EXISTING UTILITY, IT IS THE CONTRACTOR'S RESPONSIBILITY TO FIELD VERIFY THE HORIZONTAL AND VERTICAL LOCATION OF SUCH EXISTING UTILITY, EITHER THROUGH POTHOLING OR ALTERNATIVE METHOD. REPORT INFORMATION TO THE ENGINEER PRIOR TO CONSTRUCTION.

Galloway
6162 S. Willow Drive, Suite 320
Greenwood Village, CO 80111
303.770.8884
GallowayUS.com

COPYRIGHT
THESE PLANS ARE AN INSTRUMENT OF SERVICE AND ARE THE PROPERTY OF GALLOWAY, AND MAY NOT BE DUPLICATED, DISCLOSED, OR REPRODUCED WITHOUT THE WRITTEN CONSENT OF GALLOWAY. COPYRIGHTS AND INFRINGEMENTS WILL BE ENFORCED AND PROSECUTED.

CONSTRUCTION DOCUMENTS
CONSTITUTION STORAGE

JOHNSON DEVELOPMENT ASSOCIATES

6855 CONSTITUTION AVENUE
COLORADO SPRINGS, CO 80915

#	Date	Issue / Description	Init.

Project No:	JDA02
Drawn By:	BLB
Checked By:	BAS
Date:	4/22/2022

GRADING & EROSION CONTROL INITIAL PLAN

G1.1

Sheet 3 of 10

H:\Johnson Development Associates\CO, Colorado Springs - Constitution Ave 6855\DWG\CD\CD\JDA02-G1.1-Initial.dwg - Craig Dick - 7/8/2022

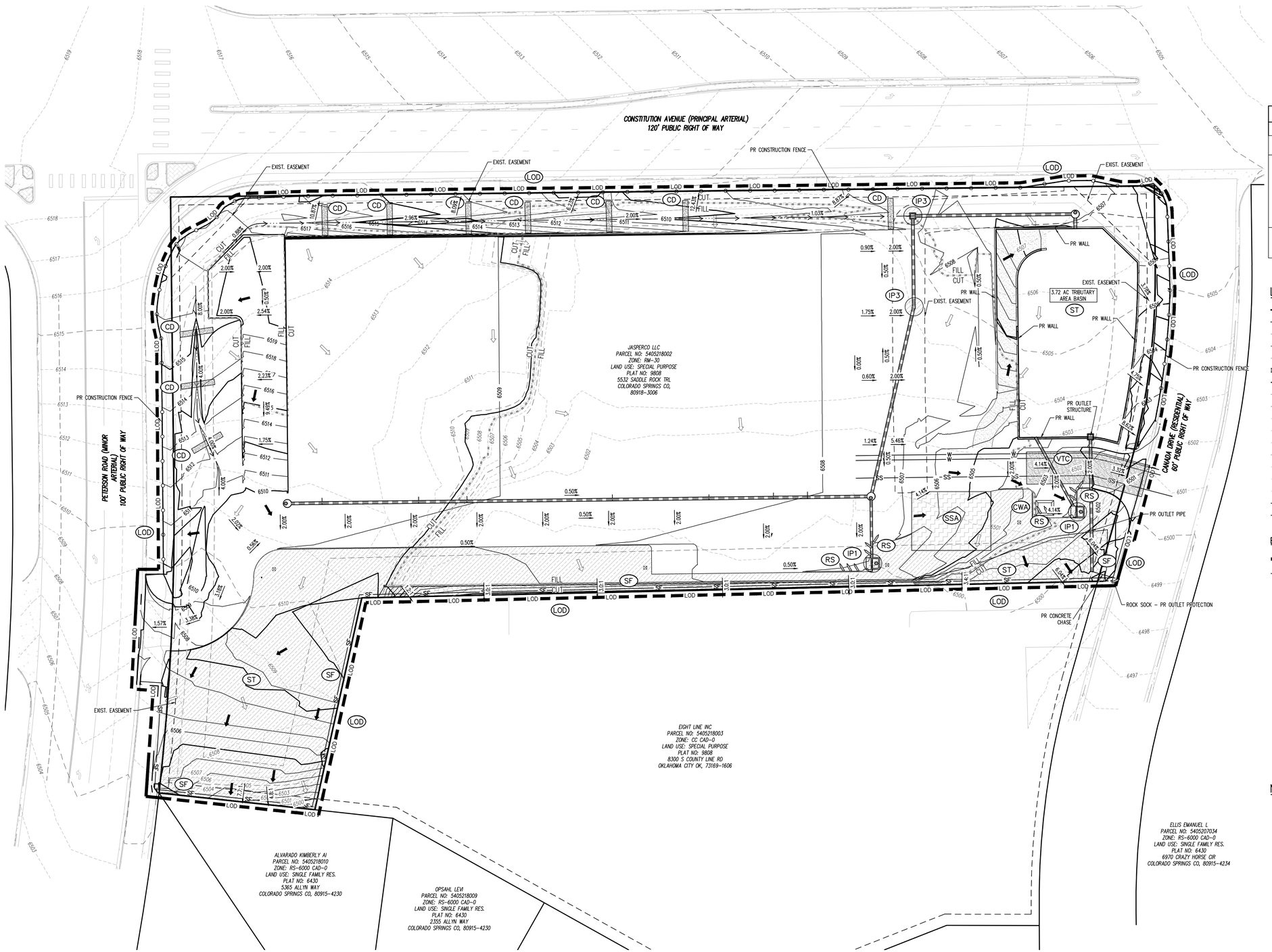

EROSION CONTROL PHASING SCHEDULE

PHASE	DESCRIPTION
INITIAL	INSTALL SILT & CONSTRUCTION FENCE.
INTERIM	CONVERT EXISTING SEDIMENT BASIN FROM "EARLY GRADING & EROSION CONTROL PLANS" TO THE PROPOSED WATER QUALITY CAPTURE VOLUME DETENTION BASIN W/ ALL PERMANENT CONTROL MEASURES. THEN, INSTALL STABILIZED STAGING AREA, VEHICLE TRACKING CONTROL AT ENTRANCES, AND CONCRETE WASHOUT AREA. THEN OVERLOT GRADE THE ENTIRE PROJECT SITE AS SHOWN ON PLAN VIEW, INSTALL CHECK DAMS ALONG PROPOSED SWALES. FINALLY, INSTALL PROPOSED STORM SEWER. CONTRACTOR TO USE EXTREME CAUTION TO NOT DAMAGE THE WATER AND WASTEWATER IMPROVEMENTS COMPLETED IN THE EARLY METRO DISTRICT IMPROVEMENTS PLAN SET.
FINAL	CONSTRUCT CURB/GUTTER AND PAVEMENT. CONSTRUCT GAS/ELECTRIC/CABLE/PHONE IN ROW AREAS. REMOVE CONSTRUCTION BMP'S ONCE VERTICAL CONSTRUCTION OF HOUSES AND APPLICABLE LANDSCAPING IS COMPLETE.

LEGEND

- EXISTING PROPERTY LINE (PROJECT BOUNDARY)
- EXISTING PROPERTY LINE
- EXISTING CENTER LINE
- PROPOSED CENTER LINE
- EXISTING RIGHT OF WAY LINE
- PROPOSED STORM SEWER
- PROPOSED CONSTRUCTION FENCE
- EXISTING EASEMENT
- 6940 EXISTING MAJOR CONTOUR
- 6941 EXISTING MINOR CONTOUR
- W EXISTING WATER LINE
- SS EXISTING SANITARY SEWER LINE
- EXISTING DRAINAGE FEATURE OUTLINE
- EXISTING SWALE WITH FLOW DIRECTION
- FO EXISTING FIBER OPTIC
- UE EXISTING UNDERGROUND ELECTRIC
- SS PROPOSED SANITARY SEWER
- W PROPOSED WATER

EROSION CONTROL LEGEND

- LOD — LIMITS OF DISTURBANCE/ CONSTRUCTION SITE BOUNDARY
- SF — SILT FENCE
- ST — SEDIMENT TRAP
- CD — CHECK DAM
- VTC — VEHICLE TRACKING CONTROL
- CWA — CONCRETE WASHOUT AREA
- IP — INLET PROTECTION
- SSA — STABILIZED STAGING AREA
- SM — SEED AND MULCH
- ECB — EROSION CONTROL BLANKET
- EXISTING FLOW
- PROPOSED FLOW

NOTES

1. THE PLAN SHALL NOT SUBSTANTIALLY CHANGE THE DEPTH OF COVER, OR ACCESS TO UTILITY FACILITIES. ADDITIONALLY, THE PLAN SHALL NOT INCREASE OR DIVERT WATER TOWARDS UTILITY FACILITIES. ANY CHANGES TO UTILITY FACILITIES TO ACCOMMODATE THE PLAN, MUST BE DISCUSSED AND AGREED TO BY THE AFFECTED UTILITY PRIOR TO IMPLEMENTING THE PLAN. THE RESULTING COST TO RELOCATE OR PROTECT UTILITIES, OR PROVIDE INTERIM ACCESS IS AT THE EXPENSE OF THE PLAN APPLICANT.

BASIS OF BEARINGS

BASIS OF BEARING: ALL BEARINGS ARE GRID BEARINGS OF THE COLORADO STATE PLANE COORDINATE SYSTEM, CENTRAL ZONE, NORTH AMERICAN DATUM 1983. THE NORTH LINE OF THE NORTHWEST QUARTER OF SECTION 5, TOWNSHIP 14 SOUTH, RANGE 65 WEST BEARS N89°20'41"E, MONUMENTED BY THE NORTHWEST CORNER OF SAID SECTION 5, BEING A 3-1/4" ALUMINUM CAP STAMPED "PLS 4842 1985" IN RANGE BOX, AND BY THE NORTH QUARTER CORNER OF SAID SECTION 5, BEING A 3-1/4" ALUMINUM CAP STAMPED "PLS 30829 2003", AS SHOWN HEREON.

BENCHMARK

COLORADO SPRINGS UTILITIES FACILITIES INFORMATION MANAGEMENT SYSTEM (FIMS) BENCHMARK SR07 BEING A 2" ALUMINUM CAP STAMPED "CSU FIMS CONTROL SR07" AT THE SOUTHEAST CORNER OF THE CONCRETE BASE FOR AN ELECTRIC VAULT ON THE WEST SIDE OF PETERSON ROAD, ABOUT 360' SOUTH OF THE CENTER LINE OF LEOTI DRIVE.

FIMS DATUM ELEVATION = 6534.61

CAUTION – NOTICE TO CONTRACTOR

1. ALL UTILITY LOCATIONS SHOWN ARE BASED ON MAPS PROVIDED BY THE APPROPRIATE UTILITY COMPANY AND FIELD SURFACE EVIDENCE AT THE TIME OF SURVEY AND IS TO BE CONSIDERED AN APPROXIMATE LOCATION ONLY. IT IS THE CONTRACTOR'S RESPONSIBILITY TO FIELD VERIFY THE LOCATION OF ALL UTILITIES, PUBLIC OR PRIVATE, WHETHER SHOWN ON THE PLANS OR NOT, PRIOR TO CONSTRUCTION. REPORT ANY DISCREPANCIESTO THE ENGINEER PRIOR TO CONSTRUCTION.

811 Know what's **below.** **Call** before you dig.

2. WHERE A PROPOSED UTILITY CROSSES AN EXISTING UTILITY, IT IS THE CONTRACTOR'S RESPONSIBILITY TO FIELD VERIFY THE HORIZONTAL AND VERTICAL LOCATION OF SUCH EXISTING UTILITY, EITHER THROUGH POTHOLING OR ALTERNATIVE METHOD. REPORT INFORMATION TO THE ENGINEER PRIOR TO CONSTRUCTION.

Galloway
6162 S. Willow Drive, Suite 320
Greenwood Village, CO 80111
303.770.8884
GallowayUS.com

COPYRIGHT
THESE PLANS ARE AN INSTRUMENT OF SERVICE AND ARE THE PROPERTY OF GALLOWAY, AND MAY NOT BE DUPLICATED, DISCLOSED, OR REPRODUCED WITHOUT THE WRITTEN CONSENT OF GALLOWAY. COPYRIGHTS AND INFRINGEMENTS WILL BE ENFORCED AND PROSECUTED.

CONSTRUCTION DOCUMENTS
CONSTITUTION STORAGE

JOHNSON DEVELOPMENT ASSOCIATES

6855 CONSTITUTION AVENUE
COLORADO SPRINGS, CO 80915

#	Date	Issue / Description	Init.

Project No:	JDA02
Drawn By:	BLB
Checked By:	BAS
Date:	4/22/2022

GRADING & EROSION CONTROL INTERIM PLAN

G2.1

Sheet 4 of 10

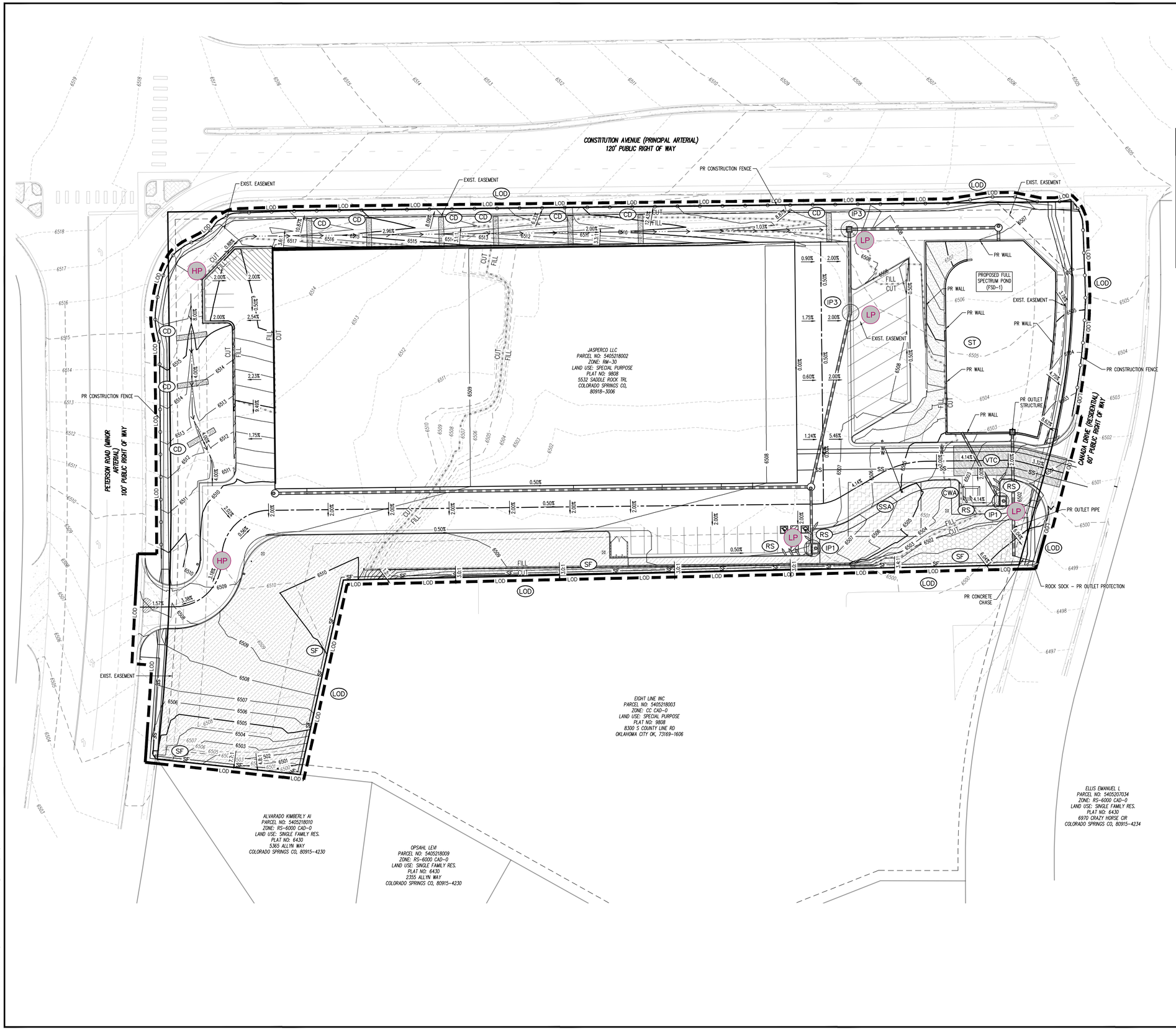

EROSION CONTROL PHASING SCHEDULE

PHASE	DESCRIPTION
INITIAL	INSTALL SILT & CONSTRUCTION FENCE.
INTERIM	CONVERT EXISTING SEDIMENT BASIN FROM "EARLY GRADING & EROSION CONTROL PLANS" TO THE PROPOSED WATER QUALITY CAPTURE VOLUME DETENTION BASIN W/ ALL PERMANENT CONTROL MEASURES. THEN, INSTALL STABILIZED STAGING AREA, VEHICLE TRACKING CONTROL AT ENTRANCES, AND CONCRETE WASHOUT AREA. THEN OVERLOT GRADE THE ENTIRE PROJECT SITE AS SHOWN ON PLAN VIEW, INSTALL CHECK DAMS ALONG PROPOSED SWALES. FINALLY, INSTALL PROPOSED STORM SEWER. CONTRACTOR TO USE EXTREME CAUTION TO NOT DAMAGE THE WATER AND WASTEWATER IMPROVEMENTS COMPLETED IN THE EARLY METRO DISTRICT IMPROVEMENTS PLAN SET.
FINAL	CONSTRUCT CURB/GUTTER AND PAVEMENT. CONSTRUCT GAS/ELECTRIC/CABLE/PHONE IN ROW AREAS. REMOVE CONSTRUCTION BMP'S ONCE VERTICAL CONSTRUCTION OF HOUSES AND APPLICABLE LANDSCAPING IS COMPLETE.

LEGEND

- EXISTING PROPERTY LINE (PROJECT BOUNDARY)
- EXISTING PROPERTY LINE
- EXISTING CENTER LINE
- PROPOSED CENTER LINE
- EXISTING RIGHT OF WAY LINE
- PROPOSED STORM SEWER
- PROPOSED CONSTRUCTION FENCE
- EXISTING EASEMENT
- 6940 EXISTING MAJOR CONTOUR
- 6941 EXISTING MINOR CONTOUR
- W EXISTING WATER LINE
- SS EXISTING SANITARY SEWER LINE
- EXISTING DRAINAGE FEATURE OUTLINE
- EXISTING SWALE WITH FLOW DIRECTION
- FO EXISTING FIBER OPTIC
- UE EXISTING UNDERGROUND ELECTRIC
- SS PROPOSED SANITARY SEWER
- W PROPOSED WATER

EROSION CONTROL LEGEND

- LOD — LIMITS OF DISTURBANCE/ CONSTRUCTION SITE BOUNDARY
- SF — SILT FENCE
- ST — SEDIMENT TRAP
- CD — CHECK DAM
- VTC — VEHICLE TRACKING CONTROL
- CWA — CONCRETE WASHOUT AREA
- RS — ROCK SOCKS
- ECB — EROSION CONTROL BLANKET
- SSA — STABILIZED STAGING AREA
- SM — SEED AND MULCH
- HP — PROPOSED HIGH POINT
- LP — PROPOSED LOW POINT

NOTES

1. THE PLAN SHALL NOT SUBSTANTIALLY CHANGE THE DEPTH OF COVER, OR ACCESS TO UTILITY FACILITIES. ADDITIONALLY, THE PLAN SHALL NOT INCREASE OR DIVERT WATER TOWARDS UTILITY FACILITIES. ANY CHANGES TO UTILITY FACILITIES TO ACCOMMODATE THE PLAN, MUST BE DISCUSSED AND AGREED TO BY THE AFFECTED UTILITY PRIOR TO IMPLEMENTING THE PLAN. THE RESULTING COST TO RELOCATE OR PROTECT UTILITIES, OR PROVIDE INTERIM ACCESS IS AT THE EXPENSE OF THE PLAN APPLICANT.

BASIS OF BEARINGS

BASIS OF BEARING: ALL BEARINGS ARE GRID BEARINGS OF THE COLORADO STATE PLANE COORDINATE SYSTEM, CENTRAL ZONE, NORTH AMERICAN DATUM 1983. THE NORTH LINE OF THE NORTHWEST QUARTER OF SECTION 5, TOWNSHIP 14 SOUTH, RANGE 65 WEST BEARS N89°20'41"E, MONUMENTED BY THE NORTHWEST CORNER OF SAID SECTION 5, BEING A 3-1/4" ALUMINUM CAP STAMPED "PLS 4842 1985" IN RANGE BOX, AND BY THE NORTH QUARTER CORNER OF SAID SECTION 5, BEING A 3-1/4" ALUMINUM CAP STAMPED "PLS 30829 2003", AS SHOWN HEREON.

BENCHMARK

COLORADO SPRINGS UTILITIES FACILITIES INFORMATION MANAGEMENT SYSTEM (FIMS) BENCHMARK SR07 BEING A 2" ALUMINUM CAP STAMPED "CSU FIMS CONTROL SR07" AT THE SOUTHEAST CORNER OF THE CONCRETE BASE FOR AN ELECTRIC VAULT ON THE WEST SIDE OF PETERSON ROAD, ABOUT 360' SOUTH OF THE CENTER LINE OF LEOTI DRIVE.

FIMS DATUM ELEVATION = 6534.61

CAUTION – NOTICE TO CONTRACTOR

1. ALL UTILITY LOCATIONS SHOWN ARE BASED ON MAPS PROVIDED BY THE APPROPRIATE UTILITY COMPANY AND FIELD SURFACE EVIDENCE AT THE TIME OF SURVEY AND IS TO BE CONSIDERED AN APPROXIMATE LOCATION ONLY. IT IS THE CONTRACTOR'S RESPONSIBILITY TO FIELD VERIFY THE LOCATION OF ALL UTILITIES, PUBLIC OR PRIVATE, WHETHER SHOWN ON THE PLANS OR NOT, PRIOR TO CONSTRUCTION. REPORT ANY DISCREPANCIESTO THE ENGINEER PRIOR TO CONSTRUCTION.

811 Know what's **below.** **Call** before you dig.

2. WHERE A PROPOSED UTILITY CROSSES AN EXISTING UTILITY, IT IS THE CONTRACTOR'S RESPONSIBILITY TO FIELD VERIFY THE HORIZONTAL AND VERTICAL LOCATION OF SUCH EXISTING UTILITY, EITHER THROUGH POTHOLING OR ALTERNATIVE METHOD. REPORT INFORMATION TO THE ENGINEER PRIOR TO CONSTRUCTION.

Galloway
6162 S. Willow Drive, Suite 320
Greenwood Village, CO 80111
303.770.8884
GallowayUS.com

COPYRIGHT
THESE PLANS ARE AN INSTRUMENT OF SERVICE AND ARE THE PROPERTY OF GALLOWAY, AND MAY NOT BE DUPLICATED, DISCLOSED, OR REPRODUCED WITHOUT THE WRITTEN CONSENT OF GALLOWAY. COPYRIGHTS AND INFRINGEMENTS WILL BE ENFORCED AND PROSECUTED.

CONSTRUCTION DOCUMENTS
CONSTITUTION STORAGE

JOHNSON DEVELOPMENT ASSOCIATES

6855 CONSTITUTION AVENUE
COLORADO SPRINGS, CO 80915

#	Date	Issue / Description	Init.

Project No:	JDA02
Drawn By:	BLB
Checked By:	BAS
Date:	4/22/2022

GRADING & EROSION CONTROL FINAL PLAN

G3.1

Sheet 5 of 10

Vehicle Tracking Control (VTC) SM-4

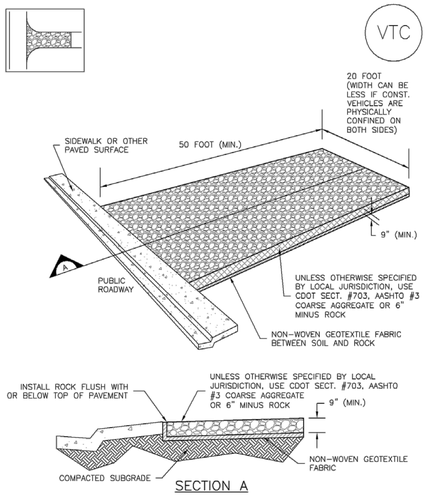

VTC-1. AGGREGATE VEHICLE TRACKING CONTROL

Vehicle Tracking Control (VTC) SM-4

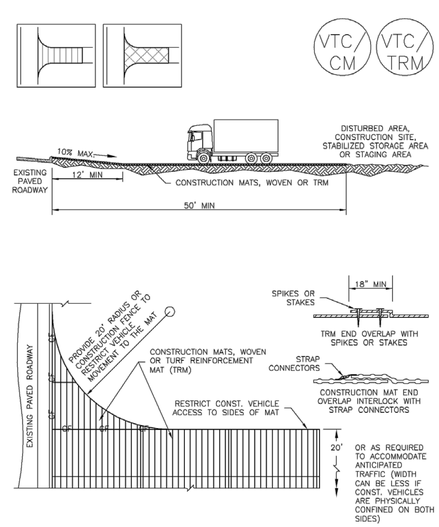

VTC-3. VEHICLE TRACKING CONTROL W/ CONSTRUCTION MAT OR TURF REINFORCEMENT MAT (TRM)

SM-4 Vehicle Tracking Control (VTC)

STABILIZED CONSTRUCTION ENTRANCE/EXIT INSTALLATION NOTES

1. SEE PLAN VIEW FOR
   -LOCATION OF CONSTRUCTION ENTRANCE(S)/EXIT(S).
   -TYPE OF CONSTRUCTION ENTRANCE(S)/EXITS(S) (WITH/WITHOUT WHEEL WASH, CONSTRUCTION MAT OR TRM).

2. CONSTRUCTION MAT OR TRM STABILIZED CONSTRUCTION ENTRANCES ARE ONLY TO BE USED ON SHORT DURATION PROJECTS (TYPICALLY RANGING FROM A WEEK TO A MONTH) WHERE THERE WILL BE LIMITED VEHICULAR ACCESS.

3. A STABILIZED CONSTRUCTION ENTRANCE/EXIT SHALL BE LOCATED AT ALL ACCESS POINTS WHERE VEHICLES ACCESS THE CONSTRUCTION SITE FROM PAVED RIGHT-OF-WAYS.

4. STABILIZED CONSTRUCTION ENTRANCE/EXIT SHALL BE INSTALLED PRIOR TO ANY LAND DISTURBING ACTIVITIES.

5. A NON-WOVEN GEOTEXTILE FABRIC SHALL BE PLACED UNDER THE STABILIZED CONSTRUCTION ENTRANCE/EXIT PRIOR TO THE PLACEMENT OF ROCK.

6. UNLESS OTHERWISE SPECIFIED BY LOCAL JURISDICTION, ROCK SHALL CONSIST OF DOT SECT. #703, AASHTO #3 COARSE AGGREGATE OR 6" (MINUS) ROCK.

STABILIZED CONSTRUCTION ENTRANCE/EXIT MAINTENANCE NOTES

1. INSPECT BMPs EACH WORKDAY, AND MAINTAIN THEM IN EFFECTIVE OPERATING CONDITION. MAINTENANCE OF BMPs SHOULD BE PROACTIVE, NOT REACTIVE. INSPECT BMPs AS SOON AS POSSIBLE (AND ALWAYS WITHIN 24 HOURS) FOLLOWING A STORM THAT CAUSES SURFACE EROSION, AND PERFORM NECESSARY MAINTENANCE.

2. FREQUENT OBSERVATIONS AND MAINTENANCE ARE NECESSARY TO MAINTAIN BMPs IN EFFECTIVE OPERATING CONDITION. INSPECTIONS AND CORRECTIVE MEASURES SHOULD BE DOCUMENTED THOROUGHLY.

3. WHERE BMPs HAVE FAILED, REPAIR OR REPLACEMENT SHOULD BE INITIATED UPON DISCOVERY OF THE FAILURE.

4. ROCK SHALL BE REAPPLIED OR REGRADED AS NECESSARY TO THE STABILIZED ENTRANCE/EXIT TO MAINTAIN A CONSISTENT DEPTH.

5. SEDIMENT TRACKED ONTO PAVED ROADS IS TO BE REMOVED THROUGHOUT THE DAY AND AT THE END OF THE DAY BY SHOVELING OR SWEEPING. SEDIMENT MAY NOT BE WASHED DOWN STORM SEWER DRAINS.

NOTE: MANY JURISDICTIONS HAVE BMP DETAILS THAT VARY FROM UDFCD STANDARD DETAILS. CONSULT WITH LOCAL JURISDICTIONS AS TO WHICH DETAIL SHOULD BE USED WHEN DIFFERENCES ARE NOTED.

(DETAILS ADAPTED FROM CITY OF BROOMFIELD, COLORADO, NOT AVAILABLE IN AUTOCAD)

Concrete Washout Area (CWA) MM-1

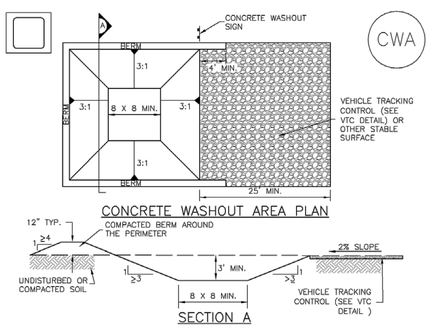

CWA-1. CONCRETE WASHOUT AREA

CWA INSTALLATION NOTES

1. SEE PLAN VIEW FOR:
   -CWA INSTALLATION LOCATION.

2. DO NOT LOCATE AN UNLINED CWA WITHIN 400' OF ANY NATURAL DRAINAGE PATHWAY OR WATERBODY. DO NOT LOCATE WITHIN 1,000' OF ANY WELLS OR DRINKING WATER SOURCES. IF SITE CONSTRAINTS MAKE THIS INFEASIBLE, OR IF HIGHLY PERMEABLE SOILS EXIST ON SITE, THE CWA MUST BE INSTALLED WITH AN IMPERMEABLE LINER (16 MIL MIN. THICKNESS) OR SURFACE STORAGE ALTERNATIVES USING PREFABRICATED CONCRETE WASHOUT DEVICES OR A LINED ABOVE GROUND STORAGE ARE SHOULD BE USED.

3. THE CWA SHALL BE INSTALLED PRIOR TO CONCRETE PLACEMENT ON SITE.

4. CWA SHALL INCLUDE A FLAT SUBSURFACE PIT THAT IS AT LEAST 8' BY 8' SLOPES LEADING OUT OF THE SUBSURFACE PIT SHALL BE 3:1 OR FLATTER. THE PIT SHALL BE AT LEAST 3' DEEP.

5. BERM SURROUNDING SIDES AND BACK OF THE CWA SHALL HAVE MINIMUM HEIGHT OF 1'.

6. VEHICLE TRACKING PAD SHALL BE SLOPED 2% TOWARDS THE CWA.

7. SIGNS SHALL BE PLACED AT THE CONSTRUCTION ENTRANCE, AT THE CWA, AND ELSEWHERE AS NECESSARY TO CLEARLY INDICATE THE LOCATION OF THE CWA TO OPERATORS OF CONCRETE TRUCKS AND PUMP RIGS.

8. USE EXCAVATED MATERIAL FOR PERIMETER BERM CONSTRUCTION.

MM-1 Concrete Washout Area (CWA)

CWA MAINTENANCE NOTES

1. INSPECT BMPs EACH WORKDAY, AND MAINTAIN THEM IN EFFECTIVE OPERATING CONDITION. MAINTENANCE OF BMPs SHOULD BE PROACTIVE, NOT REACTIVE. INSPECT BMPs AS SOON AS POSSIBLE (AND ALWAYS WITHIN 24 HOURS) FOLLOWING A STORM THAT CAUSES SURFACE EROSION, AND PERFORM NECESSARY MAINTENANCE.

2. FREQUENT OBSERVATIONS AND MAINTENANCE ARE NECESSARY TO MAINTAIN BMPs IN EFFECTIVE OPERATING CONDITION. INSPECTIONS AND CORRECTIVE MEASURES SHOULD BE DOCUMENTED THOROUGHLY.

3. WHERE BMPs HAVE FAILED, REPAIR OR REPLACEMENT SHOULD BE INITIATED UPON DISCOVERY OF THE FAILURE.

4. THE CWA SHALL BE REPAIRED, CLEANED, OR ENLARGED AS NECESSARY TO MAINTAIN CAPACITY FOR CONCRETE WASTE. CONCRETE MATERIALS, ACCUMULATED IN PIT, SHALL BE REMOVED ONCE THE MATERIALS HAVE REACHED A DEPTH OF 2'.

5. CONCRETE WASHOUT WATER, WASTED PIECES OF CONCRETE AND ALL OTHER DEBRIS IN THE SUBSURFACE PIT SHALL BE TRANSPORTED FROM THE JOB SITE IN A WATER-TIGHT CONTAINER AND DISPOSED OF PROPERLY.

6. THE CWA SHALL REMAIN IN PLACE UNTIL ALL CONCRETE FOR THE PROJECT IS PLACED.

7. WHEN THE CWA IS REMOVED, COVER THE DISTURBED AREA WITH TOP SOIL, SEED AND MULCH OR OTHERWISE STABILIZED IN A MANNER APPROVED BY THE LOCAL JURISDICTION.

(DETAIL ADAPTED FROM DOUGLAS COUNTY, COLORADO AND THE CITY OF PARKER, COLORADO, NOT AVAILABLE IN AUTOCAD).

NOTE: MANY JURISDICTIONS HAVE BMP DETAILS THAT VARY FROM UDFCD STANDARD DETAILS. CONSULT WITH LOCAL JURISDICTIONS AS TO WHICH DETAIL SHOULD BE USED WHEN DIFFERENCES ARE NOTED.

T-2 Grass Swale

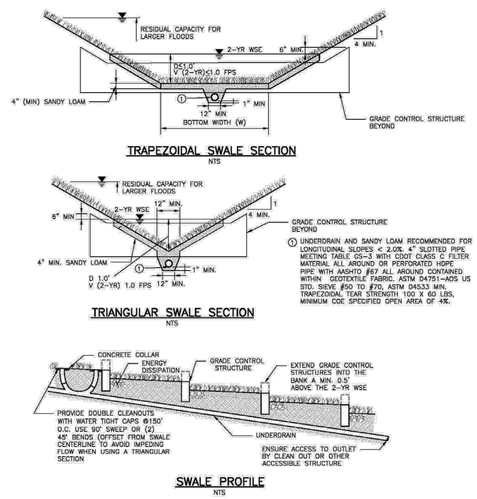

Figure GS-1. Grass Swale Profile and Sections

Design Example

The *UD-BMP* workbook, designed as a tool for both designer and reviewing agency is available at www.udfcd.org. This section provides a completed design form from this workbook as an example.

Galloway
6162 S. Willow Drive, Suite 320
Greenwood Village, CO 80111
303.770.8884
GallowayUS.com

COPYRIGHT
THESE PLANS ARE AN INSTRUMENT OF SERVICE AND ARE THE PROPERTY OF GALLOWAY, AND MAY NOT BE DUPLICATED, DISCLOSED, OR REPRODUCED WITHOUT THE WRITTEN CONSENT OF GALLOWAY. COPYRIGHTS AND INFRINGEMENTS WILL BE ENFORCED AND PROSECUTED.

CONSTRUCTION DOCUMENTS
CONSTITUTION STORAGE
JOHNSON DEVELOPMENT ASSOCIATES
6855 CONSTITUTION AVENUE
COLORADO SPRINGS, CO 80915

#	Date	Issue / Description	Init.

Project No:	JDA02
Drawn By:	BLB
Checked By:	BAS
Date:	4/22/2022

GEC DETAILS

G4.1
Sheet 6 of 10

Sediment Trap (ST) SC-8

SEDIMENT TRAP INSTALLATION NOTES

1. SEE PLAN VIEW FOR:
   –LOCATION, LENGTH AND WIDTH OF SEDIMENT TRAP.

2. ONLY USE FOR DRAINAGE AREAS LESS THAN 1 ACRE.

3. SEDIMENT TRAPS SHALL BE INSTALLED PRIOR TO ANY UPGRADIENT LAND–DISTURBING ACTIVITIES.

4. SEDIMENT TRAP BERM SHALL BE CONSTRUCTED FROM MATERIAL FROM EXCAVATION. THE BERM SHALL BE COMPACTED TO 95% OF THE MAXIMUM DENSITY IN ACCORDANCE WITH ASTM D698.

5. SEDIMENT TRAP OUTLET TO BE CONSTRUCTED OF RIPRAP, TYPE M (D50=12") TYP.SMALLER ROCK SIZE MAY BE ALLOWABLE FOR SMALLER TRAPS IF APPROVED BY LOCAL JURISDICTION.

6. THE TOP OF THE EARTHEN BERM SHALL BE A MINIMUM OF 6" HIGHER THAN THE TOP OF THE RIPRAP OUTLET STRUCTURE.

7. THE ENDS OF THE RIPRAP OUTLET STRUCTURE SHALL BE A MINIMUM OF 6" HIGHER THAN THE CENTER OF THE OUTLET STRUCTURE.

SEDIMENT TRAP MAINTENANCE NOTES

1. INSPECT BMPs EACH WORKDAY, AND MAINTAIN THEM IN EFFECTIVE OPERATING CONDITION. MAINTENANCE OF BMPs SHOULD BE PROACTIVE, NOT REACTIVE. INSPECT BMPs AS SOON AS POSSIBLE (AND ALWAYS WITHIN 24 HOURS) FOLLOWING A STORM THAT CAUSES SURFACE EROSION, AND PERFORM NECESSARY MAINTENANCE.

2. FREQUENT OBSERVATIONS AND MAINTENANCE ARE NECESSARY TO MAINTAIN BMPs IN EFFECTIVE OPERATING CONDITION. INSPECTIONS AND CORRECTIVE MEASURES SHOULD BE DOCUMENTED THOROUGHLY.

3. WHERE BMPs HAVE FAILED, REPAIR OR REPLACEMENT SHOULD BE INITIATED UPON DISCOVERY OF THE FAILURE.

4. REMOVE SEDIMENT ACCUMULATED IN TRAP AS NEEDED TO MAINTAIN THE FUNCTIONALITY OF THE BMP, TYPICALLY WHEN THE SEDIMENT DEPTH REACHES ½ THE HEIGHT OF THE RIPRAP OUTLET.

5. SEDIMENT TRAPS SHALL REMAIN IN PLACE UNTIL THE UPSTREAM DISTURBED AREA IS STABILIZED AND APPROVED BY THE LOCAL JURISDICTION.

6. WHEN SEDIMENT TRAPS ARE REMOVED, THE DISTURBED AREA SHALL BE COVERED WITH TOPSOIL, SEEDED AND MULCHED OR OTHERWISE STABILIZED IN A MANNER APPROVED BY THE LOCAL JURISDICTION.

(DETAILS ADAPTED FROM DOUGLAS COUNTY, COLORADO, NOT AVAILABLE IN AUTOCAD)

NOTE: MANY JURISDICTIONS HAVE BMP DETAILS THAT VARY FROM UDFCD STANDARD DETAILS. CONSULT WITH LOCAL JURISDICTIONS AS TO WHICH DETAIL SHOULD BE USED WHEN DIFFERENCES ARE NOTED.

EC-12 Check Dams (CD)

CHECK DAM INSTALLATION NOTES

1. SEE PLAN VIEW FOR:
   –LOCATION OF CHECK DAMS.
   –CHECK DAM TYPE (CHECK DAM OR REINFORCED CHECK DAM).
   –LENGTH (L), CREST LENGTH (CL), AND DEPTH (D).

2. CHECK DAMS INDICATED ON INITIAL SWMP SHALL BE INSTALLED AFTER CONSTRUCTION FENCE, BUT PRIOR TO ANY UPSTREAM LAND DISTURBING ACTIVITIES.

3. RIPRAP UTILIZED FOR CHECK DAMS SHOULD BE OF APPROPRIATE SIZE FOR THE APPLICATION. TYPICAL TYPES OF RIPRAP USED FOR CHECK DAMS ARE TYPE M (D50 12") OR TYPE L (D50 9").

4. RIPRAP PAD SHALL BE TRENCHED INTO THE GROUND A MINIMUM OF 1'.

5. THE ENDS OF THE CHECK DAM SHALL BE A MINIMUM OF 1' 6" HIGHER THAN THE CENTER OF THE CHECK DAM.

CHECK DAM MAINTENANCE NOTES

1. INSPECT BMPs EACH WORKDAY, AND MAINTAIN THEM IN EFFECTIVE OPERATING CONDITION. MAINTENANCE OF BMPs SHOULD BE PROACTIVE, NOT REACTIVE. INSPECT BMPs AS SOON AS POSSIBLE (AND ALWAYS WITHIN 24 HOURS) FOLLOWING A STORM THAT CAUSES SURFACE EROSION, AND PERFORM NECESSARY MAINTENANCE.

2. FREQUENT OBSERVATIONS AND MAINTENANCE ARE NECESSARY TO MAINTAIN BMPs IN EFFECTIVE OPERATING CONDITION. INSPECTIONS AND CORRECTIVE MEASURES SHOULD BE DOCUMENTED THOROUGHLY.

3. WHERE BMPs HAVE FAILED, REPAIR OR REPLACEMENT SHOULD BE INITIATED UPON DISCOVERY OF THE FAILURE.

4. SEDIMENT ACCUMULATED UPSTREAM OF THE CHECK DAMS SHALL BE REMOVED WHEN THE SEDIMENT DEPTH IS WITHIN ½ OF THE HEIGHT OF THE CREST.

5. CHECK DAMS ARE TO REMAIN IN PLACE UNTIL THE UPSTREAM DISTURBED AREA IS STABILIZED AND APPROVED BY THE LOCAL JURISDICTION.

6. WHEN CHECK DAMS ARE REMOVED, EXCAVATIONS SHALL BE FILLED WITH SUITABLE COMPACTED BACKFILL. DISTURBED AREA SHALL BE SEEDED AND MULCHED AND COVERED WITH GEOTEXTILE OR OTHERWISE STABILIZED IN A MANNER APPROVED BY THE LOCAL JURISDICTION.

(DETAILS ADAPTED FROM DOUGLAS COUNTY, COLORADO, NOT AVAILABLE IN AUTOCAD)

NOTE: MANY JURISDICTIONS HAVE BMP DETAILS THAT VARY FROM UDFCD STANDARD DETAILS. CONSULT WITH LOCAL JURISDICTIONS AS TO WHICH DETAIL SHOULD BE USED WHEN DIFFERENCES ARE NOTED.

SC-1 Silt Fence (SF)

SILT FENCE INSTALLATION NOTES

1. SILT FENCE MUST BE PLACED AWAY FROM THE TOE OF THE SLOPE TO ALLOW FOR WATER PONDING. SILT FENCE AT THE TOE OF A SLOPE SHOULD BE INSTALLED IN A FLAT LOCATION AT LEAST SEVERAL FEET (2–5 FT) FROM THE TOE OF THE SLOPE TO ALLOW ROOM FOR PONDING AND DEPOSITION.

2. A UNIFORM 6" X 4" ANCHOR TRENCH SHALL BE EXCAVATED USING TRENCHER OR SILT FENCE INSTALLATION DEVICE. NO ROAD GRADERS, BACKHOES, OR SIMILAR EQUIPMENT SHALL BE USED.

3. COMPACT ANCHOR TRENCH BY HAND WITH A "JUMPING JACK" OR BY WHEEL ROLLING. COMPACTION SHALL BE SUCH THAT SILT FENCE RESISTS BEING PULLED OUT OF ANCHOR TRENCH BY HAND.

4. SILT FENCE SHALL BE PULLED TIGHT AS IT IS ANCHORED TO THE STAKES. THERE SHOULD BE NO NOTICEABLE SAG BETWEEN STAKES AFTER IT HAS BEEN ANCHORED TO THE STAKES.

5. SILT FENCE FABRIC SHALL BE ANCHORED TO THE STAKES USING 1" HEAVY DUTY STAPLES OR NAILS WITH 1" HEADS. STAPLES AND NAILS SHOULD BE PLACED 3" ALONG THE FABRIC DOWN THE STAKE.

6. AT THE END OF A RUN OF SILT FENCE ALONG A CONTOUR, THE SILT FENCE SHOULD BE TURNED PERPENDICULAR TO THE CONTOUR TO CREATE A "J–HOOK." THE "J–HOOK" EXTENDING PERPENDICULAR TO THE CONTOUR SHOULD BE OF SUFFICIENT LENGTH TO KEEP RUNOFF FROM FLOWING AROUND THE END OF THE SILT FENCE (TYPICALLY 10' – 20').

7. SILT FENCE SHALL BE INSTALLED PRIOR TO ANY LAND DISTURBING ACTIVITIES.

SILT FENCE MAINTENANCE NOTES

1. INSPECT BMPs EACH WORKDAY, AND MAINTAIN THEM IN EFFECTIVE OPERATING CONDITION. MAINTENANCE OF BMPs SHOULD BE PROACTIVE, NOT REACTIVE. INSPECT BMPs AS SOON AS POSSIBLE (AND ALWAYS WITHIN 24 HOURS) FOLLOWING A STORM THAT CAUSES SURFACE EROSION, AND PERFORM NECESSARY MAINTENANCE.

2. FREQUENT OBSERVATIONS AND MAINTENANCE ARE NECESSARY TO MAINTAIN BMPs IN EFFECTIVE OPERATING CONDITION. INSPECTIONS AND CORRECTIVE MEASURES SHOULD BE DOCUMENTED THOROUGHLY.

3. WHERE BMPs HAVE FAILED, REPAIR OR REPLACEMENT SHOULD BE INITIATED UPON DISCOVERY OF THE FAILURE.

4. SEDIMENT ACCUMULATED UPSTREAM OF THE SILT FENCE SHALL BE REMOVED AS NEEDED TO MAINTAIN THE FUNCTIONALITY OF THE BMP, TYPICALLY WHEN DEPTH OF ACCUMULATED SEDIMENTS IS APPROXIMATELY 6".

5. REPAIR OR REPLACE SILT FENCE WHEN THERE ARE SIGNS OF WEAR, SUCH AS SAGGING, TEARING, OR COLLAPSE.

6. SILT FENCE IS TO REMAIN IN PLACE UNTIL THE UPSTREAM DISTURBED AREA IS STABILIZED AND APPROVED BY THE LOCAL JURISDICTION, OR IS REPLACED BY AN EQUIVALENT PERIMETER SEDIMENT CONTROL BMP.

7. WHEN SILT FENCE IS REMOVED, ALL DISTURBED AREAS SHALL BE COVERED WITH TOPSOIL, SEEDED AND MULCHED OR OTHERWISE STABILIZED AS APPROVED BY LOCAL JURISDICTION.

(DETAIL ADAPTED FROM TOWN OF PARKER, COLORADO AND CITY OF AURORA, NOT AVAILABLE IN AUTOCAD)

NOTE: MANY JURISDICTIONS HAVE BMP DETAILS THAT VARY FROM UDFCD STANDARD DETAILS. CONSULT WITH LOCAL JURISDICTIONS AS TO WHICH DETAIL SHOULD BE USED WHEN DIFFERENCES ARE NOTED.

SC-8 Sediment Trap (ST)

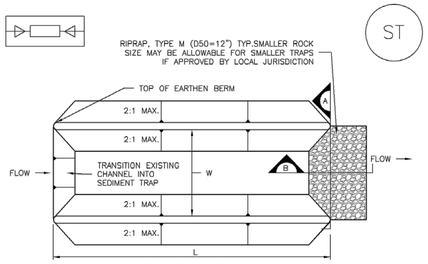

SEDIMENT TRAP PLAN

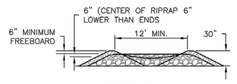

SECTION A

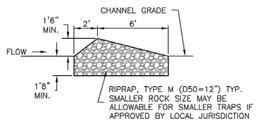

SECTION B

ST–1. SEDIMENT TRAP

Check Dams (CD) EC-12

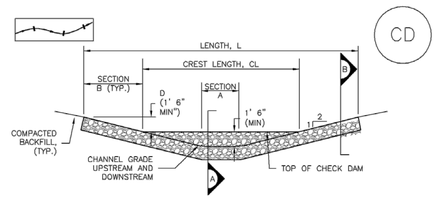

CHECK DAM ELEVATION VIEW

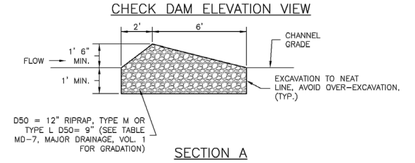

SECTION A

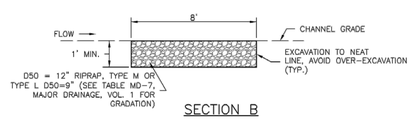

SECTION B

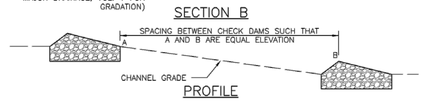

PROFILE

CD–1. CHECK DAM

Silt Fence (SF) SC-1

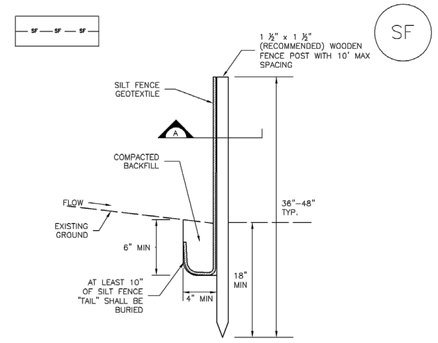

SILT FENCE

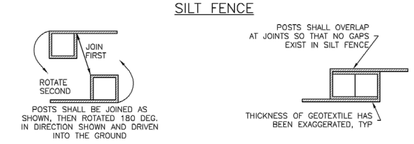

SECTION A

SF–1. SILT FENCE

Galloway
6162 S. Willow Drive, Suite 320
Greenwood Village, CO 80111
303.770.8884
GallowayUS.com

COPYRIGHT
THESE PLANS ARE AN INSTRUMENT OF SERVICE AND ARE THE PROPERTY OF GALLOWAY, AND MAY NOT BE DUPLICATED, DISCLOSED, OR REPRODUCED WITHOUT THE WRITTEN CONSENT OF GALLOWAY. COPYRIGHTS AND INFRINGEMENTS WILL BE ENFORCED AND PROSECUTED.

CONSTRUCTION DOCUMENTS
CONSTITUTION STORAGE

JOHNSON DEVELOPMENT ASSOCIATES

6855 CONSTITUTION AVENUE
COLORADO SPRINGS, CO 80915

#	Date	Issue / Description	Init.

Project No:	JDA02
Drawn By:	BLB
Checked By:	BAS
Date:	4/22/2022

GEC DETAILS

G4.2

Sheet 7 of 10

Construction Fence (CF) SM-3

CONSTRUCTION FENCE MAINTENANCE NOTES

1. INSPECT BMPs EACH WORKDAY, AND MAINTAIN THEM IN EFFECTIVE OPERATING CONDITION. MAINTENANCE OF BMPs SHOULD BE PROACTIVE, NOT REACTIVE. INSPECT BMPs AS SOON AS POSSIBLE (AND ALWAYS WITHIN 24 HOURS) FOLLOWING A STORM THAT CAUSES SURFACE EROSION, AND PERFORM NECESSARY MAINTENANCE.

2. FREQUENT OBSERVATIONS AND MAINTENANCE ARE NECESSARY TO MAINTAIN BMPs IN EFFECTIVE OPERATING CONDITION. INSPECTIONS AND CORRECTIVE MEASURES SHOULD BE DOCUMENTED THOROUGHLY.

3. WHERE BMPs HAVE FAILED, REPAIR OR REPLACEMENT SHOULD BE INITIATED UPON DISCOVERY OF THE FAILURE.

4. CONSTRUCTION FENCE SHALL BE REPAIRED OR REPLACED WHEN THERE ARE SIGNS OF DAMAGE SUCH AS RIPS OR SAGS. CONSTRUCTION FENCE IS TO REMAIN IN PLACE UNTIL THE UPSTREAM DISTURBED AREA IS STABILIZED AND APPROVED BY THE LOCAL JURISDICTION.

5. WHEN CONSTRUCTION FENCES ARE REMOVED, ALL DISTURBED AREAS ASSOCIATED WITH THE INSTALLATION, MAINTENANCE, AND/OR REMOVAL OF THE FENCE SHALL BE COVERED WITH TOPSOIL, SEEDED AND MULCHED, OR OTHERWISE STABILIZED AS APPROVED BY LOCAL JURISDICTION.

NOTE: MANY JURISDICTIONS HAVE BMP DETAILS THAT VARY FROM UDFCD STANDARD DETAILS. CONSULT WITH LOCAL JURISDICTIONS AS TO WHICH DETAIL SHOULD BE USED WHEN DIFFERENCES ARE NOTED.

(DETAIL ADAPTED FROM TOWN OF PARKER, COLORADO, NOT AVAILABLE IN AUTOCAD)

Rock Sock (RS) SC-5

ROCK SOCK MAINTENANCE NOTES

1. INSPECT BMPs EACH WORKDAY, AND MAINTAIN THEM IN EFFECTIVE OPERATING CONDITION. MAINTENANCE OF BMPs SHOULD BE PROACTIVE, NOT REACTIVE. INSPECT BMPs AS SOON AS POSSIBLE (AND ALWAYS WITHIN 24 HOURS) FOLLOWING A STORM THAT CAUSES SURFACE EROSION, AND PERFORM NECESSARY MAINTENANCE.

2. FREQUENT OBSERVATIONS AND MAINTENANCE ARE NECESSARY TO MAINTAIN BMPs IN EFFECTIVE OPERATING CONDITION. INSPECTIONS AND CORRECTIVE MEASURES SHOULD BE DOCUMENTED THOROUGHLY.

3. WHERE BMPs HAVE FAILED, REPAIR OR REPLACEMENT SHOULD BE INITIATED UPON DISCOVERY OF THE FAILURE.

4. ROCK SOCKS SHALL BE REPLACED IF THEY BECOME HEAVILY SOILED, OR DAMAGED BEYOND REPAIR.

5. SEDIMENT ACCUMULATED UPSTREAM OF ROCK SOCKS SHALL BE REMOVED AS NEEDED TO MAINTAIN FUNCTIONALITY OF THE BMP. TYPICALLY WHEN DEPTH OF ACCUMULATED SEDIMENTS IS APPROXIMATELY ½ OF THE HEIGHT OF THE ROCK SOCK.

6. ROCK SOCKS ARE TO REMAIN IN PLACE UNTIL THE UPSTREAM DISTURBED AREA IS STABILIZED AND APPROVED BY THE LOCAL JURISDICTION.

7. WHEN ROCK SOCKS ARE REMOVED, ALL DISTURBED AREAS SHALL BE COVERED WITH TOPSOIL, SEEDED AND MULCHED OR OTHERWISE STABILIZED AS APPROVED BY LOCAL JURISDICTION.

(DETAIL ADAPTED FROM TOWN OF PARKER, COLORADO AND CITY OF AURORA, COLORADO, NOT AVAILABLE IN AUTOCAD)

NOTE: MANY JURISDICTIONS HAVE BMP DETAILS THAT VARY FROM UDFCD STANDARD DETAILS. CONSULT WITH LOCAL JURISDICTIONS AS TO WHICH DETAIL SHOULD BE USED WHEN DIFFERENCES ARE NOTED.

NOTE: THE DETAILS INCLUDED WITH THIS FACT SHEET SHOW COMMONLY USED, CONVENTIONAL METHODS OF ROCK SOCK INSTALLATION IN THE DENVER METROPOLITAN AREA. THERE ARE MANY OTHER SIMILAR PROPRIETARY PRODUCTS ON THE MARKET. UDFCD NEITHER NDORSES NOR DISCOURAGES USE OF PROPRIETARY PROTECTION PRODUCTS; HOWEVER, IN THE EVENT PROPRIETARY METHODS ARE USED, THE APPROPRIATE DETAIL FROM THE MANUFACTURER MUST BE INCLUDED IN THE SWMP AND THE BMP MUST BE INSTALLED AND MAINTAINED AS SHOWN IN THE MANUFACTURER'S DETAILS.

SM-6 Stabilized Staging Area (SSA)

STABILIZED STAGING AREA MAINTENANCE NOTES

5. STABILIZED STAGING AREA SHALL BE ENLARGED IF NECESSARY TO CONTAIN PARKING, STORAGE, AND UNLOADING/LOADING OPERATIONS.

6. THE STABILIZED STAGING AREA SHALL BE REMOVED AT THE END OF CONSTRUCTION. THE GRANULAR MATERIAL SHALL BE REMOVED OR, IF APPROVED BY THE LOCAL JURISDICTION, USED ON SITE, AND THE AREA COVERED WITH TOPSOIL, SEEDED AND MULCHED OR OTHERWISE STABILIZED IN A MANNER APPROVED BY LOCAL JURISDICTION.

NOTE: MANY MUNICIPALITIES PROHIBIT THE USE OF RECYCLED CONCRETE AS GRANULAR MATERIAL FOR STABILIZED STAGING AREAS DUE TO DIFFICULTIES WITH RE-ESTABLISHMENT OF VEGETATION IN AREAS WHERE RECYCLED CONCRETE WAS PLACED.

NOTE: MANY JURISDICTIONS HAVE BMP DETAILS THAT VARY FROM UDFCD STANDARD DETAILS. CONSULT WITH LOCAL JURISDICTIONS AS TO WHICH DETAIL SHOULD BE USED WHEN DIFFERENCES ARE NOTED.

(DETAILS ADAPTED FROM DOUGLAS COUNTY, COLORADO, NOT AVAILABLE IN AUTOCAD)

SM-3 Construction Fence (CF)

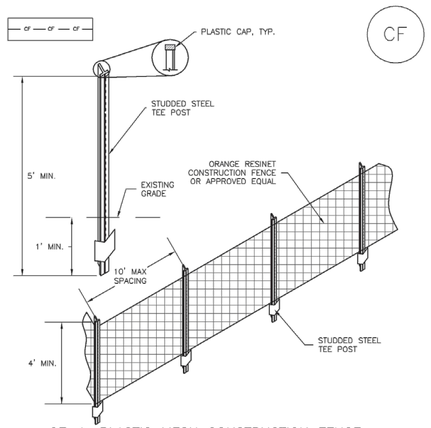

CF-1. PLASTIC MESH CONSTRUCTION FENCE

CONSTRUCTION FENCE INSTALLATION NOTES

1. SEE PLAN VIEW FOR:
   -LOCATION OF CONSTRUCTION FENCE.

2. CONSTRUCTION FENCE SHOWN SHALL BE INSTALLED PRIOR TO ANY LAND DISTURBING ACTIVITIES.

3. CONSTRUCTION FENCE SHALL BE COMPOSED OF ORANGE, CONTRACTOR-GRADE MATERIAL THAT IS AT LEAST 4' HIGH. METAL POSTS SHOULD HAVE A PLASTIC CAP FOR SAFETY.

4. STUDDED STEEL TEE POSTS SHALL BE UTILIZED TO SUPPORT THE CONSTRUCTION FENCE. MAXIMUM SPACING FOR STEEL TEE POSTS SHALL BE 10'.

5. CONSTRUCTION FENCE SHALL BE SECURELY FASTENED TO THE TOP, MIDDLE, AND BOTTOM OF EACH POST.

SC-5 Rock Sock (RS)

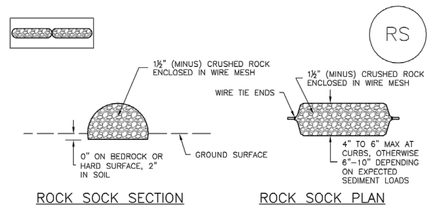

ROCK SOCK SECTION ROCK SOCK PLAN

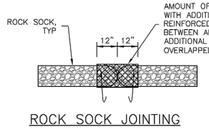

ROCK SOCK JOINTING

ANY GAP AT JOINT SHALL BE FILLED WITH AN ADEQUATE AMOUNT OF ½" (MINUS) CRUSHED ROCK AND WRAPPED WITH ADDITIONAL WIRE MESH SECURED TO ENDS OF ROCK REINFORCED SOCK. AS AN ALTERNATIVE TO FILLING JOINTS BETWEEN ADJOINING ROCK SOCKS WITH CRUSHED ROCK AND ADDITIONAL WIRE WRAPPING, ROCK SOCKS CAN BE OVERLAPPED (TYPICALLY 12-INCH OVERLAP) TO AVOID GAPS.

GRADATION TABLE	
SIEVE SIZE	MASS PERCENT PASSING SQUARE MESH SIEVES
	NO. 4
2"	100
1½"	90 – 100
1"	20 – 55
¾"	0 – 15
⅜"	0 – 5
MATCHES SPECIFICATIONS FOR NO. 4 COARSE AGGREGATE FOR CONCRETE PER AASHTO M43. ALL ROCK SHALL BE FRACTURED FACE, ALL SIDES.	

ROCK SOCK INSTALLATION NOTES

1. SEE PLAN VIEW FOR:
   -LOCATION(S) OF ROCK SOCKS.

2. CRUSHED ROCK SHALL BE ½" (MINUS) IN SIZE WITH A FRACTURED FACE (ALL SIDES) AND SHALL COMPLY WITH GRADATION SHOWN ON THIS SHEET (1½" MINUS).

3. WIRE MESH SHALL BE FABRICATED OF 10 GAGE POULTRY MESH, OR EQUIVALENT, WITH A MAXIMUM OPENING OF ½", RECOMMENDED MINIMUM ROLL WIDTH OF 48"

4. WIRE MESH SHALL BE SECURED USING "HOG RINGS" OR WIRE TIES AT 6" CENTERS ALONG ALL JOINTS AND AT 2" CENTERS ON ENDS OF SOCKS.

5. SOME MUNICIPALITIES MAY ALLOW THE USE OF FILTER FABRIC AS AN ALTERNATIVE TO WIRE MESH FOR THE ROCK ENCLOSURE.

RS-1. ROCK SOCK PERIMETER CONTROL

Stabilized Staging Area (SSA) SM-6

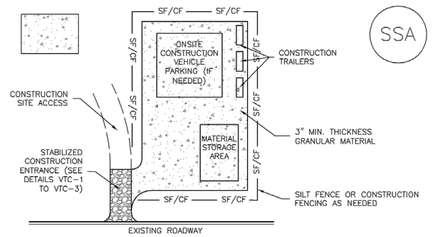

SSA-1. STABILIZED STAGING AREA

STABILIZED STAGING AREA INSTALLATION NOTES

1. SEE PLAN VIEW FOR
   -LOCATION OF STAGING AREA(S).
   -CONTRACTOR MAY ADJUST LOCATION AND SIZE OF STAGING AREA WITH APPROVAL FROM THE LOCAL JURISDICTION.

2. STABILIZED STAGING AREA SHOULD BE APPROPRIATE FOR THE NEEDS OF THE SITE. OVERSIZING RESULTS IN A LARGER AREA TO STABILIZE FOLLOWING CONSTRUCTION.

3. STAGING AREA SHALL BE STABILIZED PRIOR TO OTHER OPERATIONS ON THE SITE.

4. THE STABILIZED STAGING AREA SHALL CONSIST OF A MINIMUM 3" THICK GRANULAR MATERIAL.

5. UNLESS OTHERWISE SPECIFIED BY LOCAL JURISDICTION, ROCK SHALL CONSIST OF DOT SECT. #703, AASHTO #3 COARSE AGGREGATE OR 6" (MINUS) ROCK.

6. ADDITIONAL PERIMETER BMPs MAY BE REQUIRED INCLUDING BUT NOT LIMITED TO SILT FENCE AND CONSTRUCTION FENCING.

STABILIZED STAGING AREA MAINTENANCE NOTES

1. INSPECT BMPs EACH WORKDAY, AND MAINTAIN THEM IN EFFECTIVE OPERATING CONDITION. MAINTENANCE OF BMPs SHOULD BE PROACTIVE, NOT REACTIVE. INSPECT BMPs AS SOON AS POSSIBLE (AND ALWAYS WITHIN 24 HOURS) FOLLOWING A STORM THAT CAUSES SURFACE EROSION, AND PERFORM NECESSARY MAINTENANCE.

2. FREQUENT OBSERVATIONS AND MAINTENANCE ARE NECESSARY TO MAINTAIN BMPs IN EFFECTIVE OPERATING CONDITION. INSPECTIONS AND CORRECTIVE MEASURES SHOULD BE DOCUMENTED THOROUGHLY.

3. WHERE BMPs HAVE FAILED, REPAIR OR REPLACEMENT SHOULD BE INITIATED UPON DISCOVERY OF THE FAILURE.

4. ROCK SHALL BE REAPPLIED OR REGRADED AS NECESSARY IF RUTTING OCCURS OR UNDERLYING SUBGRADE BECOMES EXPOSED.

Galloway
6162 S. Willow Drive, Suite 320
Greenwood Village, CO 80111
303.770.8884
GallowayUS.com

COPYRIGHT
THESE PLANS ARE AN INSTRUMENT OF SERVICE AND ARE THE PROPERTY OF GALLOWAY, AND MAY NOT BE DUPLICATED, DISCLOSED, OR REPRODUCED WITHOUT THE WRITTEN CONSENT OF GALLOWAY. COPYRIGHTS AND INFRINGEMENTS WILL BE ENFORCED AND PROSECUTED.

CONSTRUCTION DOCUMENTS
CONSTITUTION STORAGE

JOHNSON DEVELOPMENT ASSOCIATES

6855 CONSTITUTION AVENUE
COLORADO SPRINGS, CO 80915

#	Date	Issue / Description	Init.

Project No:	JDA02
Drawn By:	BLB
Checked By:	BAS
Date:	4/22/2022

GEC DETAILS

G4.3

Sheet 8 of 10

Rolled Erosion Control Products (RECP) EC-6

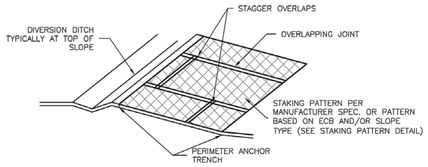

ECB–3. OUTSIDE OF DRAINAGEWAY

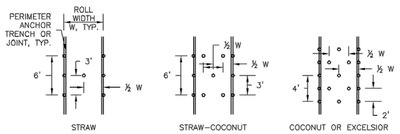

STAKING PATTERNS BY ECB TYPE

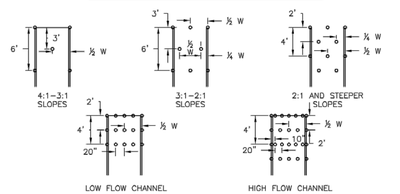

STAKING PATTERNS BY SLOPE OR CHANNEL TYPE

EC-6 Rolled Erosion Control Products (RECP)

EROSION CONTROL BLANKET INSTALLATION NOTES

1. SEE PLAN VIEW FOR:
   –LOCATION OF ECB.
   –TYPE OF ECB (STRAW, STRAW–COCONUT, COCONUT, OR EXCELSIOR).
   –AREA, A, IN SQUARE YARDS OF EACH TYPE OF ECB.

2. 100% NATURAL AND BIODEGRADABLE MATERIALS ARE PREFERRED FOR RECPs, ALTHOUGH SOME JURISDICTIONS MAY ALLOW OTHER MATERIALS IN SOME APPLICATIONS.

3. IN AREAS WHERE ECBs ARE SHOWN ON THE PLANS, THE PERMITTEE SHALL PLACE TOPSOIL AND PERFORM FINAL GRADING, SURFACE PREPARATION, AND SEEDING AND MULCHING. SUBGRADE SHALL BE SMOOTH AND MOIST PRIOR TO ECB INSTALLATION AND THE ECB SHALL BE IN FULL CONTACT WITH SUBGRADE. NO GAPS OR VOIDS SHALL EXIST UNDER THE BLANKET.

4. PERIMETER ANCHOR TRENCH SHALL BE USED ALONG THE OUTSIDE PERIMETER OF ALL BLANKET AREAS.

5. JOINT ANCHOR TRENCH SHALL BE USED TO JOIN ROLLS OF ECBs TOGETHER (LONGITUDINALLY AND TRANSVERSELY) FOR ALL ECBs EXCEPT STRAW WHICH MAY USE AN OVERLAPPING JOINT.

6. INTERMEDIATE ANCHOR TRENCH SHALL BE USED AT SPACING OF ONE–HALF ROLL LENGTH FOR COCONUT AND EXCELSIOR ECBs.

7. OVERLAPPING JOINT DETAIL SHALL BE USED TO JOIN ROLLS OF ECBs TOGETHER FOR ECBs ON SLOPES.

8. MATERIAL SPECIFICATIONS OF ECBs SHALL CONFORM TO TABLE ECB–1.

9. ANY AREAS OF SEEDING AND MULCHING DISTURBED IN THE PROCESS OF INSTALLING ECBS SHALL BE RESEEDED AND MULCHED.

10. DETAILS ON DESIGN PLANS FOR MAJOR DRAINAGEWAY STABILIZATION WILL GOVERN IF DIFFERENT FROM THOSE SHOWN HERE.

TABLE ECB–1. ECB MATERIAL SPECIFICATIONS

TYPE	COCONUT CONTENT	STRAW CONTENT	EXCELSIOR CONTENT	RECOMMENDED NETTING**
STRAW*	–	100%	–	DOUBLE/ NATURAL
STRAW–COCONUT	30% MIN	70% MAX	–	DOUBLE/ NATURAL
COCONUT	100%	–	–	DOUBLE/ NATURAL
EXCELSIOR	–	–	100%	DOUBLE/ NATURAL

*STRAW ECBs MAY ONLY BE USED OUTSIDE OF STREAMS AND DRAINAGE CHANNEL.
**ALTERNATE NETTING MAY BE ACCEPTABLE IN SOME JURISDICTIONS

Rolled Erosion Control Products (RECP) EC-6

EROSION CONTROL BLANKET MAINTENANCE NOTES

1. INSPECT BMPs EACH WORKDAY, AND MAINTAIN THEM IN EFFECTIVE OPERATING CONDITION. MAINTENANCE OF BMPs SHOULD BE PROACTIVE, NOT REACTIVE. INSPECT BMPs AS SOON AS POSSIBLE (AND ALWAYS WITHIN 24 HOURS) FOLLOWING A STORM THAT CAUSES SURFACE EROSION, AND PERFORM NECESSARY MAINTENANCE.

2. FREQUENT OBSERVATIONS AND MAINTENANCE ARE NECESSARY TO MAINTAIN BMPs IN EFFECTIVE OPERATING CONDITION. INSPECTIONS AND CORRECTIVE MEASURES SHOULD BE DOCUMENTED THOROUGHLY.

3. WHERE BMPs HAVE FAILED, REPAIR OR REPLACEMENT SHOULD BE INITIATED UPON DISCOVERY OF THE FAILURE.

4. ECBs SHALL BE LEFT IN PLACE TO EVENTUALLY BIODEGRADE, UNLESS REQUESTED TO BE REMOVED BY THE LOCAL JURISDICTION.

5. ANY ECB PULLED OUT, TORN, OR OTHERWISE DAMAGED SHALL BE REPAIRED OR REINSTALLED. ANY SUBGRADE AREAS BELOW THE GEOTEXTILE THAT HAVE ERODED TO CREATED A VOID UNDER THE BLANKET, OR THAT REMAIN DEVOID OF GRASS SHALL BE REPAIRED, RESEEDED AND MULCHED AND THE ECB REINSTALLED.

NOTE: MANY JURISDICTIONS HAVE BMP DETAILS THAT VARY FROM UDFCD STANDARD DETAILS. CONSULT WITH LOCAL JURISDICTIONS AS TO WHICH DETAIL SHOULD BE USED WHEN DIFFERENCES ARE NOTED.

(DETAILS ADAPTED FROM DOUGLAS COUNTY, COLORADO AND TOWN OF PARKER COLORADO, NOT AVAILABLE IN AUTOCAD)

SC-6 Inlet Protection (IP)

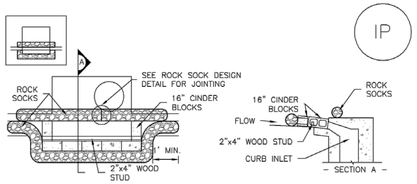

IP–1. BLOCK AND ROCK SOCK SUMP OR ON GRADE INLET PROTECTION

BLOCK AND CURB SOCK INLET PROTECTION INSTALLATION NOTES

1. SEE ROCK SOCK DESIGN DETAIL FOR INSTALLATION REQUIREMENTS.

2. CONCRETE "CINDER" BLOCKS SHALL BE LAID ON THEIR SIDES AROUND THE INLET IN A SINGLE ROW, ABUTTING ONE ANOTHER WITH THE OPEN END FACING AWAY FROM THE CURB.

3. GRAVEL BAGS SHALL BE PLACED AROUND CONCRETE BLOCKS, CLOSELY ABUTTING ONE ANOTHER AND JOINTED TOGETHER IN ACCORDANCE WITH ROCK SOCK DESIGN DETAIL.

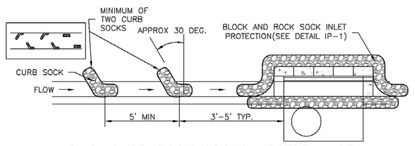

IP–2. CURB ROCK SOCKS UPSTREAM OF INLET PROTECTION

CURB ROCK SOCK INLET PROTECTION INSTALLATION NOTES

1. SEE ROCK SOCK DESIGN DETAIL INSTALLATION REQUIREMENTS.

2. PLACEMENT OF THE SOCK SHALL BE APPROXIMATELY 30 DEGREES FROM PERPENDICULAR IN THE OPPOSITE DIRECTION OF FLOW.

3. SOCKS ARE TO BE FLUSH WITH THE CURB AND SPACED A MINIMUM OF 5 FEET APART.

4. AT LEAST TWO CURB SOCKS IN SERIES ARE REQUIRED UPSTREAM OF ON–GRADE INLETS.

Inlet Protection (IP) SC-6

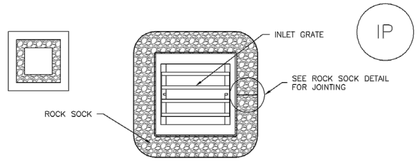

IP–3. ROCK SOCK SUMP/AREA INLET PROTECTION

ROCK SOCK SUMP/AREA INLET PROTECTION INSTALLATION NOTES
1. SEE ROCK SOCK DESIGN DETAIL FOR INSTALLATION REQUIREMENTS.

2. STRAW WATTLES/SEDIMENT CONTROL LOGS MAY BE USED IN PLACE OF ROCK SOCKS FOR INLETS IN PERVIOUS AREAS. INSTALL PER SEDIMENT CONTROL LOG DETAIL.

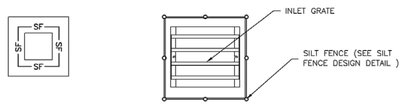

IP–4. SILT FENCE FOR SUMP INLET PROTECTION

SILT FENCE INLET PROTECTION INSTALLATION NOTES

1. SEE SILT FENCE DESIGN DETAIL FOR INSTALLATION REQUIREMENTS.

2. POSTS SHALL BE PLACED AT EACH CORNER OF THE INLET AND AROUND THE EDGES AT A MAXIMUM SPACING OF 3 FEET.

3. STRAW WATTLES/SEDIMENT CONTROL LOGS MAY BE USED IN PLACE OF SILT FENCE FOR INLETS IN PERVIOUS AREAS. INSTALL PER SEDIMENT CONTROL LOG DETAIL.

SC-6 Inlet Protection (IP)

GENERAL INLET PROTECTION INSTALLATION NOTES

1. SEE PLAN VIEW FOR:
   –LOCATION OF INLET PROTECTION.
   –TYPE OF INLET PROTECTION (IP.1, IP.2, IP.3, IP.4, IP.5, IP.6)

2. INLET PROTECTION SHALL BE INSTALLED PROMPTLY AFTER INLET CONSTRUCTION OR PAVING IS COMPLETE (TYPICALLY WITHIN 48 HOURS). IF A RAINFALL/RUNOFF EVENT IS FORECAST, INSTALL INLET PROTECTION PRIOR TO ONSET OF EVENT.

3. MANY JURISDICTIONS HAVE BMP DETAILS THAT VARY FROM UDFCD STANDARD DETAILS. CONSULT WITH LOCAL JURISDICTIONS AS TO WHICH DETAIL SHOULD BE USED WHEN DIFFERENCES ARE NOTED.

INLET PROTECTION MAINTENANCE NOTES

1. INSPECT BMPs EACH WORKDAY, AND MAINTAIN THEM IN EFFECTIVE OPERATING CONDITION. MAINTENANCE OF BMPs SHOULD BE PROACTIVE, NOT REACTIVE. INSPECT BMPs AS SOON AS POSSIBLE (AND ALWAYS WITHIN 24 HOURS) FOLLOWING A STORM THAT CAUSES SURFACE EROSION, AND PERFORM NECESSARY MAINTENANCE.

2. FREQUENT OBSERVATIONS AND MAINTENANCE ARE NECESSARY TO MAINTAIN BMPs IN EFFECTIVE OPERATING CONDITION. INSPECTIONS AND CORRECTIVE MEASURES SHOULD BE DOCUMENTED THOROUGHLY.

3. WHERE BMPs HAVE FAILED, REPAIR OR REPLACEMENT SHOULD BE INITIATED UPON DISCOVERY OF THE FAILURE.

4. SEDIMENT ACCUMULATED UPSTREAM OF INLET PROTECTION SHALL BE REMOVED AS NECESSARY TO MAINTAIN BMP EFFECTIVENESS, TYPICALLY WHEN STORAGE VOLUME REACHES 50% OF CAPACITY, A DEPTH OF 6" WHEN SILT FENCE IS USED, OR ¼ OF THE HEIGHT FOR STRAW BALES.

5. INLET PROTECTION IS TO REMAIN IN PLACE UNTIL THE UPSTREAM DISTURBED AREA IS PERMANENTLY STABILIZED, UNLESS THE LOCAL JURISDICTION APPROVES EARLIER REMOVAL OF INLET PROTECTION IN STREETS.

6. WHEN INLET PROTECTION AT AREA INLETS IS REMOVED, THE DISTURBED AREA SHALL BE COVERED WITH TOP SOIL, SEEDED AND MULCHED, OR OTHERWISE STABILIZED IN A MANNER APPROVED BY THE LOCAL JURISDICTION.

(DETAIL ADAPTED FROM TOWN OF PARKER, COLORADO AND CITY OF AURORA, COLORADO, NOT AVAILABLE IN AUTOCAD)

NOTE: MANY JURISDICTIONS HAVE BMP DETAILS THAT VARY FROM UDFCD STANDARD DETAILS. CONSULT WITH LOCAL JURISDICTIONS AS TO WHICH DETAIL SHOULD BE USED WHEN DIFFERENCES ARE NOTED.

NOTE: THE DETAILS INCLUDED WITH THIS FACT SHEET SHOW COMMONLY USED, CONVENTIONAL METHODS OF INLET PROTECTION IN THE DENVER METROPOLITAN AREA. THERE ARE MANY PROPRIETARY INLET PROTECTION METHODS ON THE MARKET. UDFCD NEITHER ENDORSES NOR DISCOURAGES USE OF PROPRIETARY INLET PROTECTION; HOWEVER, IN THE EVENT PROPRIETARY METHODS ARE USED, THE APPROPRIATE DETAIL FROM THE MANUFACTURER MUST BE INCLUDED IN THE SWMP AND THE BMP MUST BE INSTALLED AND MAINTAINED AS SHOWN IN THE MANUFACTURER'S DETAILS.

NOTE: SOME MUNICIPALITIES DISCOURAGE OR PROHIBIT THE USE OF STRAW BALES FOR INLET PROTECTION. CHECK WITH LOCAL JURISDICTION TO DETERMINE IF STRAW BALE INLET PROTECTION IS ACCEPTABLE.

Galloway
6162 S. Willow Drive, Suite 320
Greenwood Village, CO 80111
303.770.8884
GallowayUS.com

COPYRIGHT
THESE PLANS ARE AN INSTRUMENT OF SERVICE AND ARE THE PROPERTY OF GALLOWAY, AND MAY NOT BE DUPLICATED, DISCLOSED, OR REPRODUCED WITHOUT THE WRITTEN CONSENT OF GALLOWAY. COPYRIGHTS AND INFRINGEMENTS WILL BE ENFORCED AND PROSECUTED.

CONSTRUCTION DOCUMENTS
CONSTITUTION STORAGE

JOHNSON DEVELOPMENT ASSOCIATES

6855 CONSTITUTION AVENUE
COLORADO SPRINGS, CO 80915

#	Date	Issue / Description	Init.

Project No:	JDA02
Drawn By:	BLB
Checked By:	BAS
Date:	4/22/2022

GEC DETAILS

G4.4

Seeding dates for the highest success probability of perennial species along the Front Range are generally in the spring from April through early May and in the fall after the first of September until the ground freezes. If the area is irrigated, seeding may occur in summer months, as well. See Table TS/PS-3 for appropriate seeding dates.

Table TS/PS-1. Minimum Drill Seeding Rates for Various Temporary Annual Grasses

Species[a] (Common name)	Growth Season[b]	Pounds of Pure Live Seed (PLS)/acre[c]	Planting Depth (inches)
1. Oats	Cool	35 - 50	1 - 2
2. Spring wheat	Cool	25 - 35	1 - 2
3. Spring barley	Cool	25 - 35	1 - 2
4. Annual ryegrass	Cool	10 - 15	½
5. Millet	Warm	3 - 15	½ - ¾
6. Sudangrass	Warm	5–10	½ - ¾
7. Sorghum	Warm	5–10	½ - ¾
8. Winter wheat	Cool	20–35	1 - 2
9. Winter barley	Cool	20–35	1 - 2
10. Winter rye	Cool	20–35	1 - 2
11. Triticale	Cool	25–40	1 - 2

[a] Successful seeding of annual grass resulting in adequate plant growth will usually produce enough dead-plant residue to provide protection from wind and water erosion for an additional year. This assumes that the cover is not disturbed or mowed closer than 8 inches.

Hydraulic seeding may be substituted for drilling only where slopes are steeper than 3:1 or where access limitations exist. When hydraulic seeding is used, hydraulic mulching should be applied as a separate operation, when practical, to prevent the seeds from being encapsulated in the mulch.

[b] See Table TS/PS-3 for seeding dates. Irrigation, if consistently applied, may extend the use of cool season species during the summer months.

[c] Seeding rates should be doubled if seed is broadcast, or increased by 50 percent if done using a Brillion Drill or by hydraulic seeding.

Table TS/PS-2. Minimum Drill Seeding Rates for Perennial Grasses

Common[a] Name	Botanical Name	Growth Season[b]	Growth Form	Seeds/ Pound	Pounds of PLS/acre
Alakali Soil Seed Mix					
Alkali sacaton	*Sporobolus airoides*	Cool	Bunch	1,750,000	0.25
Basin wildrye	*Elymus cinereus*	Cool	Bunch	165,000	2.5
Sodar streambank wheatgrass	*Agropyron riparium 'Sodar'*	Cool	Sod	170,000	2.5
Jose tall wheatgrass	*Agropyron elongatum 'Jose'*	Cool	Bunch	79,000	7.0
Arriba western wheatgrass	*Agropyron smithii 'Arriba'*	Cool	Sod	110,000	5.5
Total					**17.75**
Fertile Loamy Soil Seed Mix					
Ephriam crested wheatgrass	*Agropyron cristatum 'Ephriam'*	Cool	Sod	175,000	2.0
Dural hard fescue	*Festuca ovina 'duriuscula'*	Cool	Bunch	565,000	1.0
Lincoln smooth brome	*Bromus inermis leyss 'Lincoln'*	Cool	Sod	130,000	3.0
Sodar streambank wheatgrass	*Agropyron riparium 'Sodar'*	Cool	Sod	170,000	2.5
Arriba western wheatgrass	*Agropyron smithii 'Arriba'*	Cool	Sod	110,000	7.0
Total					**15.5**
High Water Table Soil Seed Mix					
Meadow foxtail	*Alopecurus pratensis*	Cool	Sod	900,000	0.5
Redtop	*Agrostis alba*	Warm	Open sod	5,000,000	0.25
Reed canarygrass	*Phalaris arundinacea*	Cool	Sod	68,000	0.5
Lincoln smooth brome	*Bromus inermis leyss 'Lincoln'*	Cool	Sod	130,000	3.0
Pathfinder switchgrass	*Panicum virgatum 'Pathfinder'*	Warm	Sod	389,000	1.0
Alkar tall wheatgrass	*Agropyron elongatum 'Alkar'*	Cool	Bunch	79,000	5.5
Total					**10.75**
Transition Turf Seed Mix[d]					
Ruebens Canadian bluegrass	*Poa compressa 'Ruebens'*	Cool	Sod	2,500,000	0.5
Dural hard fescue	*Festuca ovina 'duriuscula'*	Cool	Bunch	565,000	1.0
Citation perennial ryegrass	*Lolium perenne 'Citation'*	Cool	Sod	247,000	3.0
Lincoln smooth brome	*Bromus inermis leyss 'Lincoln'*	Cool	Sod	130,000	3.0
Total					**7.5**

Table TS/PS-2. Minimum Drill Seeding Rates for Perennial Grasses (cont.)

Common Name	Botanical Name	Growth Season[b]	Growth Form	Seeds/ Pound	Pounds of PLS/acre
Sandy Soil Seed Mix					
Blue grama	*Bouteloua gracilis*	Warm	Sod-forming bunchgrass	825,000	0.5
Camper little bluestem	*Schizachyrium scoparium 'Camper'*	Warm	Bunch	240,000	1.0
Prairie sandreed	*Calamovilfa longifolia*	Warm	Open sod	274,000	1.0
Sand dropseed	*Sporobolus cryptandrus*	Cool	Bunch	5,298,000	0.25
Vaughn sideoats grama	*Bouteloua curtipendula 'Vaughn'*	Warm	Sod	191,000	2.0
Arriba western wheatgrass	*Agropyron smithii 'Arriba'*	Cool	Sod	110,000	5.5
Total					**10.25**
Heavy Clay, Rocky Foothill Seed Mix					
Ephriam crested wheatgrass[d]	*Agropyron cristatum 'Ephriam'*	Cool	Sod	175,000	1.5
Oahe Intermediate wheatgrass	*Agropyron intermedium 'Oahe'*	Cool	Sod	115,000	5.5
Vaughn sideoats grama[e]	*Bouteloua curtipendula 'Vaughn'*	Warm	Sod	191,000	2.0
Lincoln smooth brome	*Bromus inermis leyss 'Lincoln'*	Cool	Sod	130,000	3.0
Arriba western wheatgrass	*Agropyron smithii 'Arriba'*	Cool	Sod	110,000	5.5
Total					**17.5**

[a] All of the above seeding mixes and rates are based on drill seeding followed by crimped straw mulch. These rates should be doubled if seed is broadcast and should be increased by 50 percent if the seeding is done using a Brillion Drill or is applied through hydraulic seeding. Hydraulic seeding may be substituted for drilling only where slopes are steeper than 3:1. If hydraulic seeding is used, hydraulic mulching should be done as a separate operation.

[b] See Table TS/PS-3 for seeding dates.

[c] If site is to be irrigated, the transition turf seed rates should be doubled.

[d] Crested wheatgrass should not be used on slopes steeper than 6H to 1V.

[e] Can substitute 0.5 lbs PLS of blue grama for the 2.0 lbs PLS of Vaughn sideoats grama.

Table TS/PS-3. Seeding Dates for Annual and Perennial Grasses

	Annual Grasses (Numbers in table reference species in Table TS/PS-1)		Perennial Grasses	
Seeding Dates	**Warm**	**Cool**	**Warm**	**Cool**
January 1–March 15			✓	✓
March 16–April 30	4	1,2,3	✓	✓
May 1–May 15	4		✓	
May 16–June 30	4,5,6,7			
July 1–July 15	5,6,7			
July 16–August 31				
September 1–September 30		8,9,10,11		
October 1–December 31			✓	✓

Mulch

Cover seeded areas with mulch or an appropriate rolled erosion control product to promote establishment of vegetation. Anchor mulch by crimping, netting or use of a non-toxic tackifier. See the Mulching BMP Fact Sheet for additional guidance.

Maintenance and Removal

Monitor and observe seeded areas to identify areas of poor growth or areas that fail to germinate. Reseed and mulch these areas, as needed.

An area that has been permanently seeded should have a good stand of vegetation within one growing season if irrigated and within three growing seasons without irrigation in Colorado. Reseed portions of the site that fail to germinate or remain bare after the first growing season.

Seeded areas may require irrigation, particularly during extended dry periods. Targeted weed control may also be necessary.

Protect seeded areas from construction equipment and vehicle access.

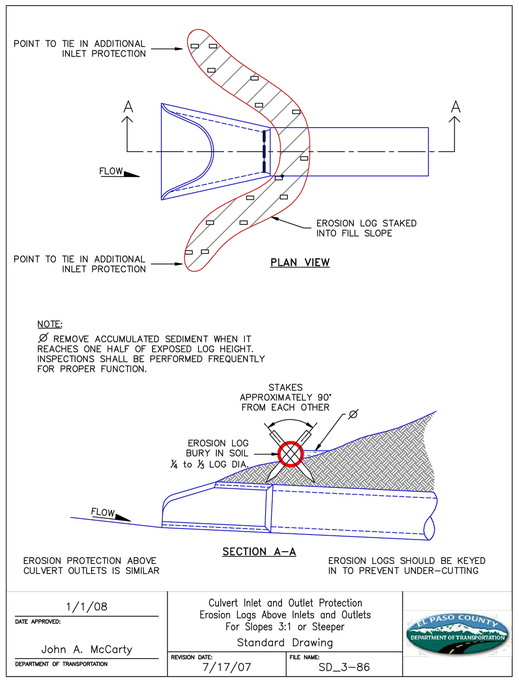

Galloway
6162 S. Willow Drive, Suite 320
Greenwood Village, CO 80111
303.770.8884
GallowayUS.com

COPYRIGHT
THESE PLANS ARE AN INSTRUMENT OF SERVICE AND ARE THE PROPERTY OF GALLOWAY, AND MAY NOT BE DUPLICATED, DISCLOSED, OR REPRODUCED WITHOUT THE WRITTEN CONSENT OF GALLOWAY. COPYRIGHTS AND INFRINGEMENTS WILL BE ENFORCED AND PROSECUTED.

CONSTRUCTION DOCUMENTS
CONSTITUTION STORAGE
JOHNSON DEVELOPMENT ASSOCIATES
6855 CONSTITUTION AVENUE
COLORADO SPRINGS, CO 80915

#	Date	Issue / Description	Init.

Project No:	JDA02
Drawn By:	BLB
Checked By:	BAS
Date:	4/22/2022

GEC DETAILS

G4.5
Sheet 10 of 10