SITE NUMBER: COL02568

SITE NAME: PETERSON AFB NORTH_RELO

FA#: 15785624

USID: 315923

6915 SPACE VILLAGE AVENUE
COLORADO SPRINGS, CO 80915
JURISDICTION: COLORADO SPRINGS

SITE TYPE: MONOPOLE / WIC

Please include:
-signature block for PCD department, 1-2 inches

PROJECT DESCRIPTION

NEW SITE BUILD UNMANNED TELECOMMUNICATIONS FACILITY.

1. BRING POWER / FIBER TO SITE LOCATION
2. ADD AT&T APPROVED WALK IN CABINET (WIC) AND ASSOCIATED INTERIOR EQUIPMENT
3. ADD (1) 30KW AC DIESEL GENERATOR
4. ADD (1) NEW GPS UNIT
5. ADD (3) VFA12-HD-WLL SECTOR MOUNTS ON (E) MONOPOLE
6. ADD (6) ANTENNAS, (2) PER SECTOR
7. ADD (12) RRHs, (4) PER SECTOR
8. ADD (3) DC9 SURGE SUPPRESSORS, (1) PER SECTOR
9. ADD (6) DC TRUNKS
10. ADD (3) FIBER TRUNKS

PROJECT INFORMATION

Property Information:
Site Name: PETERSON AFB NORTH_RELO

Site Number: COL02568

FA#: 15785624

Site Address: 6915 SPACE VILLAGE AVENUE
COLORADO SPRINGS, CO 80915

A.P.N. Number: 5417001004

Jurisdiction: COLORADO SPRINGS

Latitude: 38°50'13.704"N (38.8371400)°

Longitude: 104°41'53.916"W (-104.6983100)°

Ground Elevation: 6278' FT. AMSL

Project: NSB

Current Use: UNMANNED TELECOMMUNICATIONS SITE

Proposed Use: UNMANNED TELECOMMUNICATIONS SITE

Property Owner:
COLO MILITARY ACADEMY BLDG CORP
360 COMMAND VIEW
COLORADO SPRINGS, CO 80915

Power Agency:
COLORADO SPRINGS UTILITIES
ph: 800-238-5434

Telephone Agency:
CENTURYLINK
ph: 800-244-1111

PACE#: MRUTH051317

USID: 315923

RFDS ID: 4992124

PROJECT TEAM

APPLICANT / LESSEE:
PROJECT MANAGER
AT&T MOBILITY CORP.
ADDRESS: 7670 S. CHESTER ST.
CITY, STATE ZIP: CENTENNIAL, CO 80112
CONTACT: FRANK DEPERALTA
EMAIL: fd1733@att.com
PH: (858) 666-7635

CONSTRUCTION MANAGER:
AT&T MOBILITY CORP.
ADDRESS: 7670 S. CHESTER ST.
CITY, STATE ZIP: CENTENNIAL, CO 80112
CONTACT: REID POST
EMAIL: RP836C@ATT.COM
PH: (720) 838-4228

RF ENGINEER:
AT&T MOBILITY CORP.
ADDRESS: 7670 S. CHESTER ST.
CITY, STATE ZIP: CENTENNIAL, CO 80112
CONTACT: JULIUS DELACRUZ
EMAIL: JD235U@ATT.COM
PH: (720) 472-3519

ARCHITECT / ENGINEER:
TELCYTE INFRASTRUCTURE SERVICES
ADDRESS: 3450 N HIGLEY RD - SUITE 102
CITY, STATE ZIP: MESA, AZ 85215
CONTACT: CHRISTIAN MUELLER
EMAIL: cmueller@telcyte.com
PH: (720) 244-6013

TOWER OWNER:
CROWN CASTLE
ADDRESS: 2055 STEARMAN DR.
CITY, STATE ZIP: CHANDLER, AZ 85286
CONTACT: KRISTEN LEONARD
EMAIL: Kristen.Leonard@crowncastle.com
PH: (412) 952-1614

SHEET INDEX

		REV
T-1	TITLE SHEET	C
GN-1	GENERAL NOTES	C
GN-2	GENERAL NOTES	C
GN-3	GENERAL NOTES	C
GN-4	GENERAL NOTES	C
GN-5	GENERAL NOTES	C
GN-6	GENERAL NOTES	C
GN-7	SITE SIGNAGE	C
A-1	OVERALL SITE PLAN - EXTERIOR EQUIPMENT WIC	C
A-2	EXISTING COMPOUND PLAN - EXTERIOR EQUIPMENT WIC	C
A-2.1	PROPOSED COMPOUND PLAN - EXTERIOR EQUIPMENT WIC	C
A-2.2	INTERIOR WIC LAYOUT - INTERIOR EQUIPMENT WIC	C
A-3	ANTENNA PLAN & DETAILS - MONOPOLE	C
A-4.1	MONOPOLE SOUTH ELEVATIONS	C
A-4.2	MONOPOLE WEST ELEVATIONS	C
A-5	DETAILS	C
A-5.1	DETAILS	C
S-1	STRUCTURAL PLAN & DETAILS	C
S-2	STRUCTURAL PLAN & DETAILS	C
S-3	GENERATOR DETAILS	C
E-1	GENERAL ELECTRICAL/GROUNDING NOTES	C
E-2	UTILITY SITE PLAN	C
E-3	POWER ONE-LINE DIAGRAM	C
E-4	BATTERY DETAILS & SPECIFICATIONS	C
G-1	GROUNDING PLAN	C
G-2	GROUNDING DETAILS	C
G-3	GROUNDING DETAILS	C
G-4	GROUNDING DETAILS	C

SURVEY & WIC ATTACHMENT DETAILS ADDED AS ADDENDUM

CODE COMPLIANCE

ALL WORK AND MATERIALS SHALL BE PERFORMED AND INSTALLED IN ACCORDANCE WITH THE CURRENT EDITIONS OF THE FOLLOWING CODES AS ADOPTED BY THE LOCAL GOVERNING AUTHORITIES. NOTHING IN THESE PLANS IS TO BE CONSTRUED TO PERMIT WORK NOT CONFORMING TO THESE CODES.

1. 2017 PIKES PEAK REGIONAL BUILDING CODE (PPRBC)
2. 2017 PIKES PEAK REGIONAL FIRE CODE (PPRFC)
3. 2017 PIKES PEAK REGIONAL MECHANICAL CODE (PPRMC)
4. 2017 PIKES PEAK REGIONAL PLUMBING CODE (PPRPC)
5. 2017 PIKES PEAK REGIONAL ELECTRICAL CODE (PPREC)
6. ICC/ANSI A117.1, CRS 9-5-101, AS AMENDED
7. 2015 NFPA 101, LIFE SAFETY CODE
8. 2016 NFPA 72, NATIONAL FIRE ALARM CODE
9. 2016 NFPA 13, FIRE SPRINKLER CODE
10. 2020 NATIONAL ELECTRIC CODE (NEC)

VICINITY MAP

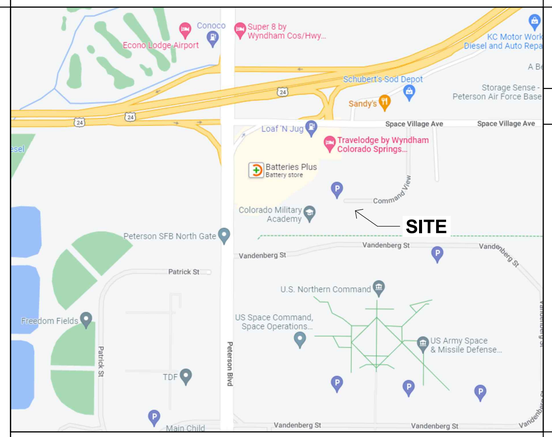

PROJECTS

LTE 1C	☒	LTE 3C	☒	LTE 5C	☒	RFDS ID: 4992124
LTE 2C	☒	LTE 4C	☒	LTE 6C	☐	

DIRECTIONS FROM AT&T

DIRECTIONS FROM AT&T's OFFICE AT 161 INVERNESS DR W, ENGLEWOOD, CO 80112:

1. GET ON I-25 S IN CENTENNIAL FROM INVERNESS BLVD AND E DRY CREEK RD 0.9 MI
2. HEAD NORTHEAST TOWARD INVERNESS DR W 203 FT
3. TURN LEFT TOWARD INVERNESS BLVD 85 FT
4. TURN RIGHT ONTO INVERNESS BLVD 128 FT
5. TURN LEFT AT THE 1ST CROSS STREET ONTO INVERNESS DR W 0.2 MI
6. USE THE LEFT LANE TO TURN LEFT ONTO E DRY CREEK RD 0.2 MI
7. USE THE LEFT 2 LANES TO TURN LEFT TO MERGE ONTO I-25 S 0.3 MI
8. FOLLOW I-25 S AND CO-21 S TO SPACE VILLAGE AVE IN CIMARRON HILLS. TAKE THE SPACE VILLAGE AVE EXIT FROM US-24 E 59.0 MI
9. MERGE ONTO I-25 S 42.6 MI
10. TAKE EXIT 153 FOR INTERQUEST PKWY 0.7 MI
11. CONTINUE ONTO INTERQUEST PKWY 1.9 MI
12. TURN RIGHT ONTO CO-21 S 10.1 MI
13. CONTINUE STRAIGHT TO STAY ON CO-21 S PASS BY WENDY'S (ON THE LEFT IN 1.0 MI) 2.0 MI
14. TAKE EXIT 141 FOR PLATTE AVE TOWARD US-24 E 0.3 MI
15. TURN LEFT ONTO E PLATTE AVE 0.4 MI
16. CONTINUE ONTO US-24 E 0.8 MI
17. TAKE THE SPACE VILLAGE AVE EXIT 0.1 MI
18. KEEP LEFT AT THE FORK AND MERGE ONTO SPACE VILLAGE AVE 121 FT
19. FOLLOW SPACE VILLAGE AVE TO COMMAND VIEW 0.3 MI
20. MERGE ONTO SPACE VILLAGE AVE 0.1 MI
21. TURN RIGHT ONTO COMMAND VIEW RESTRICTED USAGE ROAD 0.2 MI
22. TURN LEFT TO STAY ON COMMAND VIEW RESTRICTED USAGE ROAD
23. DESTINATION WILL BE ON THE LEFT

OCCUPANCY AND CONSTRUCTION TYPE

OCCUPANCY : U (UNMANNED)

CONSTRUCTION TYPE: V-B

DISABLED ACCESS REQUIREMENTS

FACILITY IS UNMANNED AND NOT FOR HUMAN HABITATION, ACCESSIBILITY ACCESS IS NOT REQUIRED, IN ACCORDANCE WITH CALIFORNIA BUILDING CODE, CODE OF REGULATIONS, TITLE 24, PART 2, VOLUME 1, CHAPTER 11B, DIVISION 2, SECTION 11B-203.5

SPECIAL INSPECTIONS

NONE

APPROVALS

APPROVED BY:	INITIALS:	DATE:
AT&T:		
VENDOR:		
R.F.:		
LEASING / LANDLORD:		
ZONING:		
CONSTRUCTION:		
POWER / TELCO:		
PG&E:		

GENERAL CONTRACTOR NOTES

DO NOT SCALE DRAWINGS

THESE DRAWINGS ARE FORMATTED TO BE FULL SIZE AT 24" x 36". CONTRACTOR SHALL VERIFY ALL PLANS AND EXISTING DIMENSIONS AND CONDITIONS ON THE JOBSITE AND SHALL IMMEDIATELY NOTIFY THE ARCHITECT/ENGINEER IN WRITING OF ANY DISCREPANCIES BEFORE PROCEEDING WITH THE WORK OR MATERIAL ORDERS OR BE RESPONSIBLE FOR THE SAME.

Please add "PCD File No. TWR-22-005"

DIGALERT
800-227-2600
Call 2 Full Working Days In Advance

AT&T Site ID:
COL02568
6915 SPACE VILLAGE AVENUE
COLORADO SPRINGS, CO 80915

Tower Owner:
CROWN CASTLE
2055 SOUTH STEARMAN DRIVE
CHANDLER, AZ 85286

PREPARED FOR:
at&t Mobility
161 Inverness Drive West 2nd floor
Englewood, Colorado 80112

A&E:
TELCYTE INFRASTRUCTURE SERVICES
3450 N HIGLEY RD - SUITE 102,
MESA, AZ 85215

AT&T SITE NO:	COL02568
BU NO:	823722
DRAWN BY:	AK
CHECKED BY:	CM

REV	DATE	DESCRIPTION
A	2/25/22	PRELIMINARY CD'S
B	03/21/22	CLIENT REVISIONS
C	5/19/22	CLIENT REVISIONS

Licensor:
COLORADO LICENSED
TIM ALEXANDER
44563
EXP
10/31/2023
PROFESSIONAL ENGINEER
SIGNED, 19 MAY 2022

IT IS A VIOLATION OF LAW FOR ANY PERSON, UNLESS THEY ARE ACTING UNDER THE DIRECTION OF A LICENSED PROFESSIONAL ENGINEER, TO ALTER THIS DOCUMENT.

Issued For:
5/19/22
PRELIMINARY CD'S

SHEET TITLE:
TITLE SHEET

SHEET NUMBER:
T-1

GENERAL CONSTRUCTION NOTES:

GENERAL CONSTRUCTION

1. FOR THE PURPOSE OF CONSTRUCTION DRAWINGS, THE FOLLOWING DEFINITIONS SHALL APPLY:
   GENERAL CONTRACTOR: T.B.D.
   CONTRACTOR: T.B.D.
   OWNER: AT&T

2. ALL SITE WORK SHALL BE COMPLETED AS INDICATED ON THE DRAWINGS AND AT&T PROJECT SPECIFICATIONS.

3. GENERAL CONTRACTOR SHALL VISIT THE SITE AND SHALL FAMILIARIZE HIMSELF WITH ALL CONDITIONS AFFECTING THE PROPOSED WORK AND SHALL MAKE PROVISIONS. GENERAL CONTRACTOR SHALL BE RESPONSIBLE FOR FAMILIARIZING HIMSELF WITH ALL CONTRACT DOCUMENTS, FIELD CONDITIONS, DIMENSIONS, AND CONFIRMING THAT THE WORK MAY BE ACCOMPLISHED AS SHOWN PRIOR TO PROCEEDING WITH CONSTRUCTION. ANY DISCREPANCIES SHALL BE BROUGHT TO THE ATTENTION OF THE ENGINEER PRIOR TO THE COMMENCEMENT OF WORK.

4. ALL MATERIALS FURNISHED AND INSTALLED SHALL BE IN STRICT ACCORDANCE WITH ALL APPLICABLE CODES, REGULATIONS, AND ORDINANCES. GENERAL CONTRACTOR SHALL ISSUE ALL APPROPRIATE NOTICES AND COMPLY WITH ALL LAWS, ORDINANCES, RULES, REGULATIONS, AND LAWFUL ORDERS OF ANY PUBLIC AUTHORITY REGARDING THE PERFORMANCE OF WORK.

5. ALL WORK CARRIED OUT SHALL COMPLY WITH ALL APPLICABLE MUNICIPAL AND UTILITY COMPANY SPECIFICATIONS AND LOCAL JURISDICTIONAL CODES, ORDINANCES, AND APPLICABLE REGULATIONS.

6. UNLESS NOTED OTHERWISE, THE WORK SHALL INCLUDE FURNISHING MATERIALS, EQUIPMENT, APPURTENANCES, AND LABOR NECESSARY TO COMPLETE ALL INSTALLATIONS AS INDICATED ON THE DRAWINGS.

7. PLANS ARE NOT TO BE SCALED. THESE PLANS ARE INTENDED TO BE A DIAGRAMMATIC OUTLINE ONLY UNLESS OTHERWISE NOTED. DIMENSIONS SHOWN ARE TO FINISH SURFACES UNLESS OTHERWISE NOTED. SPACING BETWEEN EQUIPMENT IS THE MINIMUM REQUIRED CLEARANCE. THEREFORE, IT IS CRITICAL TO FIELD VERIFY DIMENSIONS, SHOULD THERE BE ANY QUESTIONS REGARDING THE CONTRACT DOCUMENTS, THE CONTRACTOR SHALL BE RESPONSIBLE FOR OBTAINING A CLARIFICATION FROM THE ENGINEER PRIOR TO PROCEEDING WITH THE WORK. DETAILS ARE INTENDED TO SHOW DESIGN INTENT. MODIFICATIONS MAY BE REQUIRED TO SUIT JOB DIMENSIONS OR CONDITIONS AND SUCH MODIFICATIONS SHALL BE INCLUDED AS PART OF WORK AND PREPARED BY THE ENGINEER PRIOR TO PROCEEDING WITH WORK.

8. THE CONTRACTOR SHALL INSTALL ALL EQUIPMENT AND MATERIALS IN ACCORDANCE WITH MANUFACTURER'S RECOMMENDATIONS UNLESS SPECIFICALLY STATED OTHERWISE.

9. IF THE SPECIFIED EQUIPMENT CANNOT BE INSTALLED AS SHOWN ON THESE DRAWINGS, THE CONTRACTOR SHALL PROPOSE AN ALTERNATIVE INSTALLATION SPACE FOR APPROVAL BY THE ENGINEER PRIOR TO PROCEEDING.

10. GENERAL CONTRACTOR SHALL BE RESPONSIBLE FOR THE SAFETY OF WORK AREA, ADJACENT AREAS AND BUILDING OCCUPANTS THAT ARE LIKELY TO BE AFFECTED BY THE WORK UNDER THIS CONTRACT. WORK SHALL CONFIRM TO ALL OSHA REQUIREMENTS AND THE LOCAL JURISDICTION.

11. GENERAL CONTRACTOR SHALL COORDINATE WORK AND SCHEDULE WORK ACTIVITIES WITH OTHER DISCIPLINES.

12. ERECTION SHALL BE DONE IN A WORKMANLIKE MANNER BY COMPETENT EXPERIENCED WORKMAN IN ACCORDANCE WITH APPLICABLE CODES AND THE BEST ACCEPTED PRACTICE. ALL MEMBERS SHALL BE LAID PLUMB AND TRUE AS INDICATED ON THE DRAWINGS.

13. SEAL PENETRATIONS THROUGH FIRE RATED AREAS WITH UL LISTED MATERIALS APPROVED BY LOCAL JURISDICTION. CONTRACTOR SHALL KEEP AREA CLEAN, HAZARD FREE, AND DISPOSE OF ALL DEBRIS.

14. WORK PREVIOUSLY COMPLETED IS REPRESENTED BY LIGHT SHADED LINES AND NOTES. THE SCOPE OF WORK FOR THIS PROJECT IS REPRESENTED BY DARK SHADED LINES AND NOTES. CONTRACTOR SHALL NOTIFY THE GENERAL CONTRACTOR OF ANY EXISTING CONDITIONS THAT DEVIATE FROM THE DRAWINGS PRIOR TO BEGINNING CONSTRUCTION.

15. CONTRACTOR SHALL PROVIDE WRITTEN NOTICE TO THE CONSTRUCTION MANAGER 48 HOURS PRIOR TO COMMENCEMENT OF WORK.

16. THE CONTRACTOR SHALL PROTECT EXISTING IMPROVEMENTS, PAVEMENTS, CURBS, LANDSCAPING AND STRUCTURES. ANY DAMAGED PART SHALL BE REPAIRED AT CONTRACTOR'S EXPENSE TO THE SATISFACTION OF THE OWNER.

17. THE CONTRACTOR SHALL CONTACT UTILITY LOCATING SERVICES PRIOR TO THE START OF CONSTRUCTION.

18. GENERAL CONTRACTOR SHALL COORDINATE AND MAINTAIN ACCESS FOR ALL TRADES AND CONTRACTORS TO THE SITE AND/OR BUILDING.

19. THE GENERAL CONTRACTOR SHALL BE RESPONSIBLE FOR SECURITY OF THE SITE FOR THE DURATION OF CONSTRUCTION UNTIL JOB COMPLETION.

20. THE GENERAL CONTRACTOR SHALL MAINTAIN IN GOOD CONDITION ONE COMPLETE SET OF PLANS WITH ALL REVISIONS, ADDENDA, AND CHANGE ORDERS ON THE PREMISES AT ALL TIMES.

21. THE GENERAL CONTRACTOR SHALL PROVIDE PORTABLE FIRE EXTINGUISHERS WITH A RATING OF NOT LESS THAN 2-A OT 2-A:10-B:C AND SHALL BE WITHIN 25 FEET OF TRAVEL DISTANCE TO ALL PORTIONS OF WHERE THE WORK IS BEING COMPLETED DURING CONSTRUCTION.

22. ALL EXISTING ACTIVE SEWER, WATER, GAS, ELECTRIC, AND OTHER UTILITIES SHALL BE PROTECTED AT ALL TIMES, AND WHERE REQUIRED FOR THE PROPER EXECUTION OF THE WORK, SHALL BE RELOCATED AS DIRECTED BY THE ENGINEER AND RF. EXTREME CAUTION SHOULD BE USED BY THE CONTRACTOR WHEN EXCAVATING OR DRILLING PIERS AROUND OR NEAR UTILITIES. CONTRACTOR SHALL PROVIDE SAFETY TRAINING FOR THE WORKING CREW. THIS SHALL INCLUDE BUT NOT BE LIMITED TO A) FALL PROTECTION, B) CONFINED SPACE, C) ELECTRICAL SAFETY, AND D) TRENCHING & EXCAVATION.

23. ALL EXISTING INACTIVE SEWER, WATER, GAS, ELECTRIC, AND OTHER UTILITIES, WHICH INTERFERE WITH THE EXECUTION OF THE WORK, SHALL BE REMOVED, CAPPED, PLUGGED OR OTHERWISE DISCONNECTED AT POINTS WHICH WILL NOT INTERFERE WITH THE EXECUTION OF THE WORK, AS DIRECTED BY THE RESPONSIBLE ENGINEER, AND SUBJECT TO THE APPROVAL OF THE OWNER AND/OR LOCAL UTILITIES.

24. THE AREAS OF THE OWNER'S PROPERTY DISTURBED BY THE WORK AND NOT COVERED BY THE TOWER, EQUIPMENT OR DRIVEWAY, SHALL BE GRADED TO A UNIFORM SLOPE, AND STABILIZED TO PREVENT EROSION.

25. CONTRACTOR SHALL MINIMIZE DISTURBANCE TO THE EXISTING SITE DURING CONSTRUCTION. EROSION CONTROL MEASURES, IF REQUIRED DURING CONSTRUCTION, SHALL BE IN CONFORMANCE WITH THE FEDERAL AND LOCAL JURISDICTION FOR EROSION AND SEDIMENT CONTROL.

26. NO FILL OR EMBANKMENT MATERIAL SHALL BE PLACED ON FROZEN GROUNDING. FROZEN MATERIALS, SNOW OR ICE SHALL NOT BE PLACED IN ANY FILL OR EMBANKMENT.

27. THE SUBGRADE SHALL BE BROUGHT TO A SMOOTH UNIFORM GRADE AND COMPACTED TO 95 PERCENT STANDARD PROCTOR DENSITY UNDER PAVEMENT AND STRUCTURES AND 80 PERCENT STANDARD PROCTOR DENSITY IN OPEN SPACE. ALL TRENCHES IN PUBLIC RIGHT OF WAY SHALL BE BACKFILLED WITH FLOWABLE FILL OR OTHER MATERIAL PRE-APPROVED BY THE LOCAL JURISDICTION.

28. ALL NECESSARY RUBBISH, STUMPS, DEBRIS, STICKS, STONES, AND OTHER REFUSE SHALL BE REMOVED FROM THE SITE AND DISPOSED OF IN A LAWFUL MANNER.

29. ALL BROCHURES, OPERATING AND MAINTENANCE MANUALS, CATALOGS, SHOP DRAWINGS, AND OTHER DOCUMENTS SHALL BE TURNED OVER TO THE GENERAL CONTRACTOR AT COMPLETION OF CONSTRUCTION AND PRIOR TO PAYMENT.

30. CONTRACTOR SHALL SUBMIT A COMPLETE SET OF AS-BUILT REDLINES TO THE GENERAL CONTRACTOR UPON COMPLETION OF PROJECT AND PRIOR TO FINAL PAYMENT.

31. CONTRACTOR SHALL LEAVE PREMISES IN A CLEAN CONDITION.

32. THE PROPOSED FACILITY WILL BE UNMANNED AND DOES NOT REQUIRE POTABLE WATER OR SEWER SERVICE, AND IS NOT FOR HUMAN HABITAT (NO HANDICAP ACCESS REQUIRED).

33. OCCUPANCY IS LIMITED TO PERIODIC MAINTENANCE AND INSPECTION, APPROXIMATELY 2 TIMES PER MONTH, BY AT&T TECHNICIANS.

34. NO OUTDOOR STORAGE OR SOLID WASTE CONTAINERS ARE PROPOSED.

35. ALL MATERIAL SHALL BE FURNISHED AND WORK SHALL BE PERFORMED IN ACCORDANCE WITH THE LATEST REVISION AT&T MOBILITY GROUNDING STANDARD "TECHNICAL SPECIFICATION FOR CONSTRUCTION OF GSM/GPRS WIRELESS SITES" AND "TECHNICAL SPECIFICATION FOR FACILITY GROUNDING". IN CASE OF A CONFLICT BETWEEN THE CONSTRUCTION SPECIFICATION AND THE DRAWINGS, THE DRAWINGS SHALL GOVERN.

36. CONTRACTORS SHALL BE RESPONSIBLE FOR OBTAINING ALL PERMITS AND INSPECTIONS REQUIRED FOR CONSTRUCTION. IF CONTRACTOR CANNOT OBTAIN A PERMIT, THEY MUST NOTIFY THE GENERAL CONTRACTOR IMMEDIATELY.

37. CONTRACTOR SHALL REMOVE ALL TRASH AND DEBRIS FROM THE SITE ON A DAILY BASIS.

38. INFORMATION SHOWN ON THESE DRAWINGS WAS OBTAINED FROM SITE VISITS AND/OR DRAWINGS PROVIDED BY THE SITE OWNER. CONTRACTORS SHALL NOTIFY THE ENGINEER OF ANY DISCREPANCIES PRIOR TO ORDERING MATERIAL OR PROCEEDING WITH CONSTRUCTION.

39. NO WHITE STROBE LIGHTS ARE PERMITTED. LIGHTING IF REQUIRED, WILL MEET FAA STANDARDS AND REQUIREMENTS.

40. ALL COAXIAL CABLE INSTALLATIONS TO FOLLOW MANUFACTURER'S INSTRUCTIONS AND RECOMMENDATIONS.

ANTENNA MOUNTING

41. DESIGN AND CONSTRUCTION OF ANTENNA SUPPORTS SHALL CONFORM TO CURRENT ANSI/TIA-222 OR APPLICABLE LOCAL CODES.

42. ALL STEEL MATERIALS SHALL BE GALVANIZED AFTER FABRICATION IN ACCORDANCE WITH ASTM A123 "ZINC (HOT-DIP GALVANIZED) COATINGS ON IRON AND STEEL PRODUCTS", UNLESS NOTED OTHERWISE.

43. ALL BOLTS, ANCHORS AND MISCELLANEOUS HARDWARE SHALL BE GALVANIZED IN ACCORDANCE WITH ASTM A153 "ZINC-COATING (HOT-DIP) ON IRON AND STEEL HARDWARE", UNLESS NOTED OTHERWISE.

44. DAMAGED GALVANIZED SURFACES SHALL BE REPAIRED BY COLD GALVANIZING IN ACCORDANCE WITH ASTM A780.

45. ALL ANTENNA MOUNTS SHALL BE INSTALLED WITH LOCK NUTS, DOUBLE NUTS AND SHALL BE TORQUED TO MANUFACTURER'S RECOMMENDATIONS.

46. CONTRACTOR SHALL INSTALL ANTENNA PER MANUFACTURER'S RECOMMENDATION FOR INSTALLATION AND GROUNDING.

47. ALL UNUSED PORTS ON ANY ANTENNA SHALL BE COVERED WITH CONCEALOR CAP WITH PROPER WEATHER PROOFING OR BE TERMINATED WITH A 50 Ω LOAD.

48. PRIOR TO SETTING ANTENNA AZIMUTHS AND DOWNTILTS, ANTENNA CONTRACTOR SHALL CHECK THE ANTENNA MOUNT FOR TIGHTNESS AND ENSURE THAT THEY ARE PLUMB. ANTENNA AZIMUTHS SHALL BE SET FROM TRUE NORTH AND BE ORIENTED WITHIN +/- 5° AS DEFINED BY THE RFDS. ANTENNA DOWNTILTS SHALL BE WITHIN +/- 0.5° AS DEFINED BY THE RFDS. REFER TO ND-00246.

49. JUMPERS WHERE REQUIRED MUST TERMINATE TO OPPOSITE POLARIZATION'S IN EACH SECTOR.

50. CONTRACTOR SHALL RECORD THE SERIAL #, SECTOR, AND POSITION OF EACH AT&T COMPONENT

51. TMA'S SHALL BE MOUNTED ON PIPE DIRECTLY BEHIND ANTENNAS AS CLOSE TO ANTENNA AS FEASIBLE IN A VERTICAL POSITION (IF REQUIRED).

TORQUE REQUIREMENTS

52. ALL RF CONNECTIONS SHALL BE TIGHTENED BY A TORQUE WRENCH.

53. ALL RF CONNECTIONS, GROUNDING HARDWARE AND ANTENNA HARDWARE SHALL HAVE A TORQUE MARK INSTALLED IN A CONTINUOUS STRAIGHT LINE FROM BOTH SIDES OF THE CONNECTION.
    A. RF CONNECTION BOTH SIDES OF THE CONNECTOR.
    B. GROUNDING AND ANTENNA HARDWARE ON THE NUT SIDE STARTING FROM THE THREADS TO THE SOLID SURFACE. EXAMPLE OF SOLID SURFACE: GROUND BAR, ANTENNA BRACKET METAL.

54. ALL 8M ANTENNA HARDWARE SHALL BE TIGHTENED TO 9 LB-FT (12 NM).

55. ALL 12M ANTENNA HARDWARE SHALL BE TIGHTENED TO 43 LB-FT (58 NM).

56. ALL GROUNDING HARDWARE SHALL BE TIGHTENED UNTIL THE LOCK WASHER COLLAPSES AND THE GROUNDING HARDWARE IS NO LONGER LOOSE.

57. ALL DIN TYPE CONNECTIONS SHALL BE TIGHTENED TO 18-22 LB-FT (24.4 - 29.8 NM).

58. ALL N TYPE CONNECTIONS SHALL BE TIGHTENED TO 15-20 LB-IN (1.7 - 2.3 NM).

FIBER & POWER CABLE MOUNTING

59. THE FIBER OPTIC TRUNK CABLES SHALL BE INSTALLED INTO CONDUITS, CHANNEL CABLE TRAYS, OR CABLE TRAY. WHEN INSTALLING FIBER OPTIC TRUNK CABLES INTO A CABLE TRAY SYSTEM, THEY SHALL BE INSTALLED INTO AN INTER DUCT AND A PARTITION BARRIER SHALL BE INSTALLED BETWEEN THE 600 VOLT CABLES AND THE INTER DUCT IN ORDER TO SEGREGATE CABLE TYPES. OPTIC FIBER TRUNK CABLES SHALL HAVE APPROVED CABLE RESTRAINTS EVERY (6) SIX FEET AND SECURELY FASTENED TO THE CABLE TRAY SYSTEM. NFPA 70 (NEC) ARTICLE 770 RULES SHALL APPLY.

60. THE TYPE TC-ER CABLES SHALL BE INSTALLED INTO CONDUITS, CHANNEL CABLE TRAYS, OR CABLE TRAY AND SHALL BE SECURED AT INTERVALS NOT EXCEEDING (6) SIX FEET. AN EXCEPTION; WHERE TYPE TC-ER CABLES ARE NOT SUBJECT TO PHYSICAL DAMAGE, CABLES SHALL BE PERMITTED TO MAKE A TRANSITION BETWEEN CONDUITS, CHANNEL CABLE TRAYS, OR CABLE TRAY WHICH ARE SERVING UTILIZATION EQUIPMENT OR DEVICES, A DISTANCE (6) SIX FEET SHALL NOT BE EXCEEDED WITHOUT CONTINUOUS SUPPORTING. NFPA 70 (NEC) ARTICLES 336 AND 392 RULES SHALL APPLY.

61. WHEN INSTALLING OPTIC FIBER TRUNK CABLES OR TYPE TC-ER CABLES INTO CONDUITS, NFPA 70 (NEC) ARTICLE 300 RULES SHALL APPLY.

AT&T Site ID:
COL02568
6915 SPACE VILLAGE AVENUE
COLORADO SPRINGS, CO 80915

Tower Owner:
CROWN CASTLE
2055 SOUTH STEARMAN DRIVE
CHANDLER, AZ 85286

PREPARED FOR:
at&t Mobility
161 Inverness Drive West 2nd floor
Englewood, Colorado 80112

A&E:
TELCYTE INFRASTRUCTURE SERVICES
3450 N HIGLEY RD - SUITE 102,
MESA, AZ 85215

AT&T SITE NO:	COL02568
BU NO:	823722
DRAWN BY:	AK
CHECKED BY:	CM

REV	DATE	DESCRIPTION
A	2/25/22	PRELIMINARY CD'S
B	03/21/22	CLIENT REVISIONS
C	5/19/22	CLIENT REVISIONS

Licensor:
COLORADO LICENSED
TIM ALEXANDER
44563
EXP
10/31/2023
PROFESSIONAL ENGINEER
SIGNED, 19 MAY 2022

Issued For:
5/19/22
PRELIMINARY CD'S

SHEET TITLE:
GENERAL NOTES

SHEET NUMBER:
GN-1

GENERAL CONSTRUCTION NOTES CONTINUED:

COAXIAL CABLE NOTES

62. TYPES AND SIZES OF THE ANTENNA CABLE ARE BASED ON ESTIMATED LENGTHS. PRIOR TO ORDERING CABLE, CONTRACTOR SHALL VERIFY ACTUAL LENGTH BASED ON CONSTRUCTION LAYOUT AND NOTIFY THE PROJECT MANAGER IF ACTUAL LENGTHS EXCEED ESTIMATED LENGTHS.

63. CONTRACTOR SHALL VERIFY THE DOWN-TILT OF EACH ANTENNA WITH A DIGITAL LEVEL.

64. CONTRACTOR SHALL CONFIRM COAX COLOR CODING PRIOR TO CONSTRUCTION. REFER TO "ANTENNA SYSTEM LABELING STANDARD" ND-00027 LATEST VERSION.

65. CONTRACTOR SHALL FOLLOW ALL MANUFACTURER'S RECOMMENDATIONS REGARDING BOTH THE INSTALLATION AND GROUNDING OF ALL COAXIAL CABLES, CONNECTORS, ANTENNAS, AND ALL OTHER EQUIPMENT.

66. CONTRACTOR SHALL WEATHERPROOF ALL ANTENNA CONNECTORS WITH SELF AMALGAMATING TAPE WEATHERPROOFING SHALL BE COMPLETED IN STRICT ACCORDANCE WITH AT&T STANDARDS..

GENERAL CABLE AND EQUIPMENT NOTES

70. CONTRACTOR SHALL BE RESPONSIBLE TO VERIFY ANTENNA, TMAS, DIPLEXERS, AND COAX CONFIGURATION, MAKE AND MODELS PRIOR TO INSTALLATION.

71. ALL CONNECTIONS FOR HANGERS, SUPPORTS, BRACING, ETC. SHALL BE INSTALLED PER TOWER MANUFACTURER'S RECOMMENDATIONS.

72. CONTRACTOR SHALL REFERENCE THE TOWER STRUCTURAL ANALYSIS/DESIGN DRAWINGS FOR DIRECTIONS ON CABLE DISTRIBUTION/ROUTING.

73. ALL OUTDOOR RF CONNECTORS/CONNECTIONS SHALL BE WEATHERPROOFED, EXCEPT THE RET CONNECTORS, USING BUTYL TAPE AFTER INSTALLATION AND FINAL CONNECTIONS ARE MADE. BUTYL TAPE SHALL HAVE A MINIMUM OF ONE-HALF TAPE WIDTH OVERLAP ON EACH TURN AND EACH LAYER SHALL BE WRAPPED THREE TIMES. WEATHERPROOFING SHALL BE SMOOTH WITHOUT BUCKLING. BUTYL BLEEDING IS NOT ALLOWED. SELF BONDING TAPE AND PLASTIC ENCLOSURES ALSO PERMITTED PER ATT-002-290-041 SECTION 7.

74. IF REQUIRED TO PAINT ANTENNAS AND/OR COAX:
A. TEMPERATURE SHALL BE ABOVE 50° F.
B. PAINT COLOR MUST BE APPROVED BY BUILDING OWNER/LANDLORD.
C. FOR REGULATED TOWERS, FAA/FCC APPROVED PAINT IS REQUIRED.
D. DO NOT PAINT OVER COLOR CODING OR ON EQUIPMENT MODEL NUMBERS.

76. ALL PROPOSED GROUND BAR DOWNLEADS ARE TO BE TERMINATED TO THE EXISTING ADJACENT GROUND BAR DOWNLEADS A MINIMUM DISTANCE OF 4'-0" BELOW GROUND BAR. TERMINATIONS MAY BE EXOTHERMIC OR COMPRESSION.

77. THE CONTRACTOR SHALL BE RESPONSIBLE FOR VERIFYING THE ANTENNA AND THE COAX CONFIGURATION IS THE CORRECT MAKE AND MODELS, PRIOR TO INSTALLATION.

78. ALL CONNECTIONS FOR HANGERS, SUPPORTS, BRACING, ETC. SHALL BE INSTALLED PER TOWER MANUFACTURER'S SPECIFICATION & RECOMMENDATIONS.

79. ANTENNA CONTRACTOR SHALL FURNISH AND INSTALL A 12'-0" T-BOOM SECTOR ANTENNA MOUNT, IF APPLICABLE, INCLUDING ALL HARDWARE.

DRAWING ABBREVIATIONS

AFF	ABOVE FINISH FLOOR	LF	LINEAR FEET
AGL	ABOVE GRADE LEVEL	MAX	MAXIMUM
AWG	AMERICAN WIRE GAUGE	MECH	MECHANICAL
AC	AIR CONDITIONING	MFR	MANUFACTURER
APPROX	APPROXIMATELY	MGR	MANAGER
AZ	AZIMUTH	MIN	MINIMUM
BLDG	BUILDING	MISC	MISCELLANEOUS
CM	CONSTRUCTION MANAGER	MTL	METAL
CAB	CABINET	MW	MICROWAVE
CL	CENTERLINE	NEC	NATIONAL ELECTRICAL CODE
CLG	CEILING	NIC	NOT IN CONTRACT
CLR	CLEAR	NTS	NOT TO SCALE
CO	COPPER	N/A	NOT APPLICABLE
CONC	CONCRETE	OC	ON CENTER
COND	CONDUIT	OD	OUTSIDE DIAMETER
CONST	CONSTRUCTION	OP	OVERHEAD POWER
CONT	CONTINUOUS	OT	OVERHEAD FIBER
D/C	DRAFTER/CHECKER	OPP	OPPOSITE
DEMO	DEMOLISH	PL	PROPERTY LINE
DIA OR Ø	DIAMETER	PLYWD	PLYWOOD
DIM	DIMENSION	PM	PROJECT MANAGER
DN	DOWN	PROJ	PROJECT
DTL	DETAIL	PROP	PROPERTY
DWG	DRAWING	PT	PRESSURE TREATED
EA	EACH	RF	RADIO-FREQUENCY
ELECT	ELECTRICAL	RO	ROUGH OPENING
ELEV	ELEVATION	ROW	RIGHT OF WAY
EQ	EQUAL	RRU	REMOTE RADIO UNIT
EQUIP	EQUIPMENT	REQ	REQUIRED
EXT	EXTERIOR	SBTC	SOLID BARE TINNED COPPER
FIN	FINISH	SF	SQUARE FEET
FLR	FLOOR	SHT	SHEET
FRP	FIBERGLASS REINFORCED POLYMER	SPEC	SPECIFICATION
FT	FOOT, FEET	SQ	SQUARE
GA	GAUGE	SS	STAINLESS STEEL
GALV	GALVANIZED	STL	STEEL
GC	GENERAL CONTRACTOR	STRUCT	STRUCTURE, STRUCTURAL
GLB	GLULAM BEAM	TOC	TOP OF CONCRETE
GWB	GYPSUM WALL BOARD	TOM	TOP OF MASONRY
GR	GRADE	THRU	THROUGH
GRND	GROUND	TYP	TYPICAL
HVAC	HEATING/VENTING/AIR CONDITIONING	UBC	UNIFORM BUILDING CODE
HORIZ	HORIZONTAL	UG	UNDERGROUND
HT	HEIGHT	UNO	UNLESS NOTED OTHERWISE
IBC	INTERNATIONAL BUILDING CODE	UP	UNDERGROUND POWER
ID	INSIDE DIAMETER	UF	UNDERGROUND FIBER
IN	INCH	VIF	VERIFY IN FIELD
INSUL	INSULATION	VERT	VERTICAL
INT	INTERIOR	WP	WATERPROOF
JBOX	JUNCTION BOX	W/	WITH
LB(S) OR #	POUND(S)	W/O	WITHOUT

LEGEND

EXOTHERMIC CONNECTION
MECHANICAL CONNECTION
CHEMICAL ELECTROLYTIC GROUNDING SYSTEM
TEST CHEMICAL ELECTROLYTIC GROUNDING SYSTEM
EXOTHERMIC WITH INSPECTION SLEEVE
GROUNDING BAR
GROUND ROD
TEST GROUND ROD WITH INSPECTION SLEEVE
SINGLE POLE SWITCH
DUPLEX RECEPTACLE
DUPLEX GFCI RECEPTACLE
FLUORESCENT LIGHTING FIXTURE
SMOKE DETECTION (DC)
EMERGENCY LIGHTING (DC)
SECURITY LIGHT W/PHOTOCELL
CHAIN LINK FENCE
WOOD/WROUGHT IRON FENCE
WALL STRUCTURE
LEASE AREA
PROPERTY LINE (PL)
SETBACKS
ICE BRIDGE
CABLE TRAY
WATER LINE
UNDERGROUND POWER
UNDERGROUND TELCO
OVERHEAD POWER
OVERHEAD TELCO
UNDERGROUND TELCO/POWER
ABOVE GROUND POWER
ABOVE GROUND TELCO
ABOVE GROUND TELCO/POWER

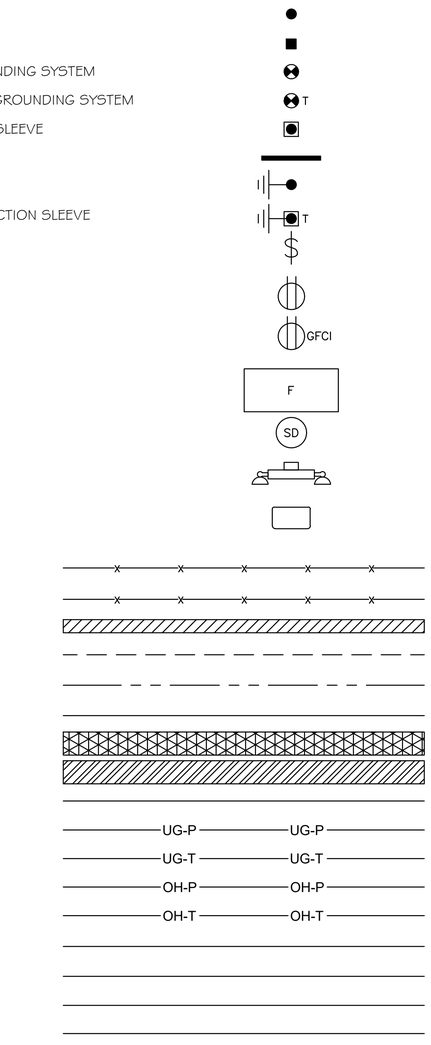

AT&T Site ID:
COL02568
6915 SPACE VILLAGE AVENUE
COLORADO SPRINGS, CO 80915

Tower Owner:
CROWN CASTLE
2055 SOUTH STEARMAN DRIVE
CHANDLER, AZ 85286

PREPARED FOR:
at&t Mobility
161 Inverness Drive West 2nd floor
Englewood, Colorado 80112

A&E:
TELCYTE INFRASTRUCTURE SERVICES
3450 N HIGLEY RD - SUITE 102,
MESA, AZ 85215

AT&T SITE NO:	COL02568
BU NO:	823722
DRAWN BY:	AK
CHECKED BY:	CM

REV	DATE	DESCRIPTION
A	2/25/22	PRELIMINARY CD'S
B	03/21/22	CLIENT REVISIONS
C	5/19/22	CLIENT REVISIONS

Licensor:
COLORADO LICENSED
JIM ALEXANDER
44563
EXP
10/31/2023
PROFESSIONAL ENGINEER
SIGNED, 19 MAY 2022

Issued For:
5/19/22
PRELIMINARY CD'S

SHEET TITLE:
GENERAL NOTES

SHEET NUMBER:
GN-2

GENERAL SITE WORK & DRAINAGE NOTES:

PART 1 - GENERAL

CLEARING, GRUBBING, STRIPPING, EROSION CONTROL, SURVEY, LAYOUT, SUBGRADE PREPARATION AND FINISH GRADING AS REQUIRED TO COMPLETE THE PROPOSED WORK SHOWN IN THESE PLANS.

1.1 REFERENCES:

A. DOT (STATE DEPARTMENT OF TRANSPORTATION STANDARD SPECIFICATIONS FOR HIGHWAY CONSTRUCTION-CURRENT EDITION).

B. ASTM (AMERICAN SOCIETY FOR TESTING AND MATERIALS).

C. OSHA (OCCUPATION SAFETY AND HEALTH ADMINISTRATION).

1.2 INSPECTION AND TESTING:

A. FIELD TESTING OF EARTHWORK COMPACTION AND CONCRETE CYLINDERS SHALL BE PERFORMED BY SUBCONTRACTORS INDEPENDENT TESTING LAB. THIS WORK TO BE COORDINATED BY THE SUBCONTRACTOR.

B. ALL WORK SHALL BE INSPECTED AND RELEASED BY THE GENERAL CONTRACTOR WHO SHALL CARRY OUT THE GENERAL INSPECTION OF THE WORK WITH SPECIFIC CONCERN TO PROPER PERFORMANCE OF THE WORK AS SPECIFIED AND/OR CALLED FOR ON THE DRAWINGS. IT IS THE SUBCONTRACTOR'S RESPONSIBILITY TO REQUEST TIMELY INSPECTIONS PRIOR TO PROCEEDING WITH FURTHER WORK THAT WOULD MAKE PARTS OF WORK INACCESSIBLE OR DIFFICULT TO INSPECT.

1.3 SITE MAINTENANCE AND PROTECTION:

A. PROVIDE ALL NECESSARY JOB SITE MAINTENANCE FROM COMMENCEMENT OF WORK UNTIL COMPLETION OF THE SUBCONTRACT.

B. AVOID DAMAGE TO THE SITE AND TO EXISTING FACILITIES, STRUCTURES, TREES, AND SHRUBS DESIGNATED TO REMAIN. TAKE PROTECTIVE MEASURES TO PREVENT EXISTING FACILITIES THAT ARE NOT DESIGNATED FOR REMOVAL FROM BEING DAMAGED BY THE WORK.

C. KEEP SITE FREE OF ALL PONDING WATER.

D. PROVIDE EROSION CONTROL MEASURES IN ACCORDANCE WITH STATE DOT AND EPA REQUIREMENTS.

E. PROVIDE AND MAINTAIN ALL TEMPORARY FENCING, BARRICADES, WARNING SIGNALS AND SIMILAR DEVICES NECESSARY TO PROTECT AGAINST THEFT FROM PROPERTY DURING THE ENTIRE PERIOD OF CONSTRUCTION. REMOVE ALL SUCH DEVICES UPON COMPLETION OF THE WORK.

F. EXISTING UTILITIES: DO NOT INTERRUPT EXISTING UTILITIES SERVING FACILITIES OCCUPIED BY THE OWNER OR OTHERS, EXCEPT WHEN PERMITTED IN WRITING BY THE ENGINEER AND THEN ONLY AFTER ACCEPTABLE TEMPORARY UTILITY SERVICES HAVE BEEN PROVIDED.

1. PROVIDE A MINIMUM 48-HOUR NOTICE TO THE ENGINEER AND RECEIVE WRITTEN NOTICE TO PROCEED BEFORE INTERRUPTING ANY UTILITY SERVICE.

PART 2 - PRODUCTS

2.1 SUITABLE BACKFILL: ASTM D2321 (CLASS I, II, III OR IVA) FREE FROM FROZEN LUMPS, REFUSE, STONES OR ROCKS LARGER THAN 3 INCHES IN ANY DIMENSION OR OTHER MATERIAL THAT MAY MAKE THE INORGANIC MATERIAL UNSUITABLE FOR BACKFILL.

2.2 NON-POROUS GRANULAR EMBANKMENT AND BACKFILL: ASTM D2321 (CLASS III, IVA OR IVB) COARSE AGGREGATE. FREE FROM FROZEN LUMPS, REFUSE, STONES OR ROCKS LARGER THAN 3 INCHES IN ANY DIMENSION OR OTHER MATERIAL THAT MAY MAKE THE INORGANIC MATERIAL UNSUITABLE FOR BACKFILL.

2.3 POROUS GRANULAR EMBANKMENT AND BACKFILL: ASTM D2321 (CLASS IA, IB OR II) COARSE AGGREGATE FREE FROM FROZEN LUMPS, REFUSE, STONES OR ROCKS LARGER THAN 3 INCHES IN ANY DIMENSION OR OTHER MATERIAL THAT MAY MAKE THE INORGANIC MATERIAL UNSUITABLE FOR BACKFILL.

2.4 SELECT STRUCTURAL FILL: GRANULAR FILL MATERIAL MEETING THE REQUIREMENTS OF ASTM E850-95. FOR USE AROUND AND UNDER STRUCTURES WHERE STRUCTURAL FILL MATERIAL ARE REQUIRED.

2.5 GRANULAR BEDDING AND TRENCH BACKFILL: WELL-GRADED SAND MEETING THE GRADATION REQUIREMENTS OF ASTM D2487 (SE OR SW-SM).

2.6 COARSE AGGREGATE FOR ACCESS ROAD SUBBASE COURSE SHALL CONFORM TO ASTM D2940.

2.7 UNSUITABLE MATERIAL: HIGH AND MODERATELY PLASTIC SILTS AND CLAYS (LL>45). MATERIAL CONTAINING REFUSE, FROZEN LUMPS, DEMOLISHED BITUMINOUS MATERIAL, VEGETATIVE MATTER, WOOD, STONES IN EXCESS OF 3 INCHES IN ANY DIMENSION, AND DEBRIS AS DETERMINED BY THE CONSTRUCTION MANAGER. TYPICAL THESE WILL BE SOILS CLASSIFIED BY ASTM AS PT, MH, CH, OH, ML, AND OL.

2.8 GEOTEXTILE FABRIC: MIRAFI 500X OR ENGINEERED APPROVED EQUAL.

2.9 PLASTIC MARKING TAPE: SHALL BE ACID AND ALKALI RESISTANT POLYETHYLENE FILM SPECIFICALLY MANUFACTURED FOR MARKING AND LOCATING UNDERGROUND UTILITIES, 6 INCHES WIDE WITH A MINIMUM THICKNESS OF 0.004 INCH. TAPE SHALL HAVE MINIMUM STRENGTH OF 1500 PSI IN BOTH DIRECTIONS AND MANUFACTURED WITH INTEGRAL CONDUCTORS, FOIL BACKING OR OTHER MEANS TO ENABLE DETECTION BY A METAL DETECTOR WHEN BURIED UP TO 3 FEET DEEP. THE METALLIC CORE OF THE TAPE SHALL BE ENCASED IN A PROTECTIVE JACKET OR PROVIDED WITH OTHER MEANS TO PROTECT IT FROM CORROSION. TAPE COLOR SHALL BE RED FOR ELECTRIC UTILITIES AND ORANGE FOR TELECOMMUNICATION UTILITIES.

PART 3 - EXECUTION

3.1 GENERAL:

A. BEFORE STARTING GENERAL SITE PREPARATION ACTIVITIES, INSTALL EROSION AND SEDIMENT CONTROL MEASURES. THE WORK AREA SHALL BE CONSTRUCTED AND MAINTAINED IN SUCH CONDITION THAT IN THE EVENT OF RAIN THE SITE WILL BE DRAINED AT ANY TIME.

B. BEFORE ALL SURVEY, LAYOUT, STAKING, AND MARKING, ESTABLISH AND MAINTAIN ALL LINES, GRADES, ELEVATIONS AND BENCHMARKS NEEDED FOR EXECUTION OF THE WORK.

C. CLEAR AND GRUB THE AREA WITHIN THE LIMITS OF THE SITE. REMOVE TREES, BRUSH, STUMPS, RUBBISH AND OTHER DEBRIS AND VEGETATION RESTING ON OR PROTRUDING THROUGH THE SURFACE OF THE SITE AREA TO BE CLEARED.

1. REMOVE THE FOLLOWING MATERIALS TO A DEPTH OF NO LESS THAN 12 INCHES BELOW THE ORIGINAL GROUND SURFACE: ROOTS, STUMPS, AND OTHER DEBRIS, BRUSH, AND REFUSE EMBEDDED IN OR PROTRUDING THROUGH THE GROUND SURFACE, RAKE, DISK OR PLOW THE AREA TO A DEPTH OF NO LESS THAN 6 INCHES, AND REMOVE TO A DEPTH OF 12 INCHES ALL ROOTS AND OTHER DEBRIS THEREBY EXPOSED.
2. REMOVE TOPSOIL MATERIAL COMPLETELY FROM THE SURFACE UNTIL THE SOIL NO LONGER MEETS THE DEFINITION OF TOPSOIL. AVOID MIXING TOPSOIL WITH SUBSOIL OR OTHER UNDESIRABLE MATERIALS.

3. EXCEPT WHERE EXCAVATION TO GREATER DEPTH IS INDICATED, FILL DEPRESSIONS RESULTING FROM CLEARING, GRUBBING AND DEMOLITION WORK COMPLETELY WITH SUITABLE FILL.

A. REMOVE FROM THE SITE AND DISPOSE IN AN AUTHORIZED LANDFILL ALL DEBRIS RESULTING FROM CLEARING AND GRUBBING OPERATIONS. BURNING WILL NOT BE PERMITTED.

B. PRIOR TO EXCAVATING, THOROUGHLY EXAMINE THE AREA TO BE EXCAVATED AND/OR TRENCHED TO VERIFY THE LOCATIONS OF FEATURES INDICATED ON THE DRAWINGS AND TO ASCERTAIN THE EXISTENCE AND LOCATION OF ANY STRUCTURE, UNDERGROUND STRUCTURE, OR OTHER ITEM NOT SHOWN THAT MIGHT INTERFERE WITH THE PROPOSED CONSTRUCTION. NOTIFY THE CONSTRUCTION MANAGER OF ANY OBSTRUCTIONS THAT WILL PREVENT ACCOMPLISHMENT OF THE WORK AS INDICATED ON THE DRAWINGS.

C. SEPARATE AND STOCK PILE ALL EXCAVATED MATERIALS SUITABLE FOR BACKFILL. ALL EXCESS EXCAVATED AND UNSUITABLE MATERIALS SHALL BE DISPOSED OF OFF-SITE IN A LEGAL MANNER.

3.2 BACKFILL:

A. AS SOON AS PRACTICAL, AFTER COMPLETING CONSTRUCTION OF THE RELATED STRUCTURE, INCLUDING EXPIRATION OF THE SPECIFIED MINIMUM CURING PERIOD FOR CAST-IN-PLACE CONCRETE, BACKFILL THE EXCAVATION WITH APPROVED MATERIAL TO RESTORE THE REQUIRED FINISHED GRADE.

1. PRIOR TO PLACING BACKFILL AROUND STRUCTURES, ALL FORMS SHALL BE REMOVED AND THE EXCAVATION CLEANED OF ALL TRASH, DEBRIS, AND UNSUITABLE MATERIALS.

2. BACKFILL BY PLACING AND COMPACTING SUITABLE BACKFILL MATERIAL OR SELECT GRANULAR BACKFILL MATERIAL WHEN REQUIRED IN UNIFORM HORIZONTAL LAYERS OF NO GREATER THAN 8-INCHES LOOSE THICKNESS AND COMPACTED. WHERE HAND OPERATED COMPACTORS ARE USED, THE FILL MATERIAL SHALL BE PLACED IN LIFTS NOT TO EXCEED 4 INCHES IN LOOSE DEPTH AND COMPACTED.

3. WHENEVER THE DENSITY TESTING INDICATES THAT THE CONTRACTOR HAS NOT OBTAINED THE SPECIFIED DENSITY, THE SUCCEEDING LAYER SHALL NOT BE PLACED UNTIL THE SPECIFICATION REQUIREMENTS ARE MET UNLESS OTHERWISE AUTHORIZED BY THE GEOTECHNICAL ENGINEER. THE CONTRACTOR SHALL TAKE WHATEVER APPROPRIATE ACTION IS NECESSARY, SUCH AS DISKING AND DRYING, ADDING WATER, OR INCREASING THE COMPACTIVE EFFORT TO MEET THE MINIMUM COMPACTION REQUIREMENTS.

B. THOROUGHLY COMPACT EACH LAYER OF BACKFILL TO A MINIMUM OF 95 PERCENT OF THE MAXIMUM DRY DENSITY AS PROVIDED BY THE STANDARD PROCTOR TEST, ASTM D 698.

3.3 TRENCH EXCAVATION:

A. UTILITY TRENCHES SHALL BE EXCAVATED TO THE LINES AND GRADES SHOWN ON THE DRAWINGS OR AS DIRECTED BY THE GENERAL CONTRACTOR. PROVIDE SHORING, SHEETING AND BRACING AS REQUIRED TO PREVENT CAVING OR SLOUGHING OF THE TRENCH WALLS.

B. EXTEND THE TRENCH WIDTH A MINIMUM OF 6 INCHES BEYOND THE OUTSIDE EDGE OF THE OUTERMOST CONDUIT.

C. WHEN SOFT YIELDING, OR OTHERWISE UNSTABLE SOIL CONDITIONS ARE ENCOUNTERED, BACKFILL AT THE REQUIRED TRENCH TO A DEPTH OF NO LESS THAN 12 INCHES BELOW THE REQUIRED ELEVATION AND BACKFILL WITH GRANULAR BEDDING MATERIAL.

3.4 TRENCH BACKFILL:

A. PROVIDE GRANULAR BEDDING MATERIAL IN ACCORDANCE WITH THE DRAWINGS AND THE UTILITY REQUIREMENTS.

B. NOTIFY THE GENERAL CONTRACTOR 24 HOURS IN ADVANCE OF BACKFILLING.

C. CONDUCT UTILITY CHECK TESTS BEFORE BACKFILLING. BACKFILL AND COMPACT TRENCH BEFORE ACCEPTANCE TESTING.

D. PLACE GRANULAR TRENCH BACKFILL UNIFORMLY ON BOTH SIDES OF THE CONDUITS IN 6-INCH UNCOMPACTED LIFTS UNTIL 12 INCHES OVER THE CONDUITS. SOLIDLY RAM AND TAMP BACKFILL INTO SPACE AROUND CONDUITS.

E. PROTECT CONDUIT FROM LATERAL MOVEMENT, IMPACT DAMAGE, OR UNBALANCED LOADING.

F. ABOVE THE CONDUIT EMBEDMENT ZONE, PLACE AND COMPACT SATISFACTORY BACKFILL MATERIAL IN 8-INCH MAXIMUM LOOSE THICKNESS LIFTS TO RESTORE THE REQUIRED FINISHED SURFACE GRADE.

G. COMPACT FINAL TRENCH BACKFILL TO A DENSITY EQUAL TO OR GREATER THAN THAT OF THE EXISTING UNDISTURBED MATERIAL IMMEDIATELY ADJACENT TO THE TRENCH BUT NO LESS THAN A MINIMUM OF 95 PERCENT OF THE MAXIMUM DRY DENSITY AS PROVIDED BY THE STANDARD PROCTOR TEST, ASTM D 698.

3.5 AGGREGATE ACCESS ROAD:

A. CLEAR, GRUB, STRIP AND EXCAVATE FOR THE ACCESS ROAD TO THE LINES AND GRADES INDICATED ON THE DRAWINGS. SCARIFY TO A DEPTH OF 6 INCHES AND PROOF-ROLL. ALL HOLES, RUTS, SOFT PLACES AND OTHER DEFECTS SHALL BE CORRECTED.

B. THE ENTIRE SUBGRADE SHALL BE COMPACTED TO NOT LESS THAN 95 PERCENT OF THE MAXIMUM DRY DENSITY AS PROVIDED BY THE MODIFIED PROCTOR TEST, ASTM D 1557.

C. AFTER PREPARATION OF THE SUBGRADE IS COMPLETE THE GEOTEXTILE FABRIC (MIRAFI 500Xi) SHALL BE INSTALLED TO THE LIMITS INDICATED ON THE DRAWINGS BY ROLLING THE FABRIC OUT LONGITUDINALLY ALONG THE ROADWAY. THE FABRIC SHALL NOT BE DRAGGED ACROSS THE SUBGRADE. PLACE THE ENTIRE ROLL IN A SINGLE OPERATION, ROLLING OUT AS SMOOTHLY AS POSSIBLE.

1. OVERLAPS PARALLEL TO THE ROADWAY WILL BE PERMITTED AT THE CENTERLINE AND AT LOCATIONS BEYOND THE ROADWAY SURFACE WIDTH (I.E. WITHIN THE SHOULDER WIDTH) ONLY. NO LONGITUDINAL OVERLAPS SHALL BE LOCATED BETWEEN THE CENTERLINE AND THE SHOULDER. PARALLEL OVERLAPS SHALL BE A MINIMUM OF 3 FEET WIDE.

2. TRANSVERSE (PERPENDICULAR TO THE ROADWAY) OVERLAPS AT THE END OF A ROLL SHALL OVERLAP IN THE DIRECTION OF THE AGGREGATE PLACEMENT (PREVIOUS ROLL ON TOP) AND SHALL HAVE A MINIMUM LENGTH OF 3 FEET.

3. ALL OVERLAPS SHALL BE PINNED WITH STAPLES OR NAILS A MINIMUM OF 10 INCHES LONG TO INSURE POSITIONING DURING PLACEMENT OF AGGREGATE. PIN LONGITUDINAL SEAMS AT 25 FOOT CENTERS AND TRANSVERSE SEAMS EVERY 5 FEET.

D. THE AGGREGATE BASE AND SURFACE COURSES SHALL BE CONSTRUCTED IN LAYERS NOT MORE THAN 4 INCH (COMPACTED) THICKNESS. AGGREGATE TO BE PLACED ON GEOTEXTILE FABRIC SHALL BE END-DUMPED ON THE FABRIC FROM THE FREE END OF THE FABRIC OR OVER PREVIOUSLY PLACED AGGREGATE. THE FIRST LIFT SHALL BE BLADED DOWN TO A THICKNESS OF 8 INCHES PRIOR TO COMPACTION. AT NO TIME SHALL EQUIPMENT, EITHER TRANSPORTING THE AGGREGATE OR GRADING THE AGGREGATE, BE PERMITTED ON THE ROADWAY WITH LESS THAN 4 INCHES OF MATERIAL COVERING THE FABRIC.

E. THE AGGREGATE SHALL BE IMMEDIATELY COMPACTED TO NOT LESS THAN 95 PERCENT OF THE MAXIMUM DRY DENSITY AS PROVIDED BY THE MODIFIED PROCTOR TEST, ASTM D 1557 WITH A TAMPING ROLLER, OR WITH A PNEUMATIC-TIRED ROLLER, OR WITH A VIBRATORY MACHINE OR ANY COMBINATION OF THE ABOVE. THE TOP LAYER SHALL BE GIVEN A FINAL ROLLING WITH A THREE-WHEEL OR TANDEM ROLLER.

3.6 FINISH GRADING:

A. PERFORM ALL GRADING TO PROVIDE POSITIVE DRAINAGE AWAY FROM STRUCTURES AND SMOOTH, EVEN SURFACE DRAINAGE OF THE ENTIRE AREA WITHIN THE LIMITS OF CONSTRUCTION. GRADING SHALL BE COMPATIBLE WITH ALL SURROUNDING TOPOGRAPHY AND STRUCTURES.

B. UTILIZE SATISFACTORY FILL MATERIAL RESULTING FROM THE EXCAVATION WORK IN THE CONSTRUCTION OF FILLS, EMBANKMENTS AND FOR REPLACEMENT OF REMOVED UNSUITABLE MATERIALS.

C. ACHIEVE FINISHED GRADE BY PLACING A MINIMUM OF 4 INCHES OF 1/2" - 3/4" CRUSHED STONE ON TOP SOIL STABILIZER FABRIC.

D. REPAIR ALL ACCESS ROADS AND SURROUNDING AREAS USED DURING THE COURSE OF THIS WORK TO THEIR ORIGINAL CONDITION.

AT&T Site ID:
COL02568
6915 SPACE VILLAGE AVENUE
COLORADO SPRINGS, CO 80915

Tower Owner:
CROWN CASTLE
2055 SOUTH STEARMAN DRIVE
CHANDLER, AZ 85286

PREPARED FOR:
at&t Mobility
161 Inverness Drive West 2nd floor
Englewood, Colorado 80112

A&E:
TELCYTE INFRASTRUCTURE SERVICES
3450 N HIGLEY RD - SUITE 102,
MESA, AZ 85215

AT&T SITE NO:	COL02568
BU NO:	823722
DRAWN BY:	AK
CHECKED BY:	CM

REV	DATE	DESCRIPTION
A	2/25/22	PRELIMINARY CD'S
B	03/21/22	CLIENT REVISIONS
C	5/19/22	CLIENT REVISIONS

Licensor:

COLORADO LICENSED
JIM ALEXANDER
44563
EXP
10/31/2023
PROFESSIONAL ENGINEER
SIGNED, 19 MAY 2022

IT IS A VIOLATION OF LAW FOR ANY PERSON, UNLESS THEY ARE ACTING UNDER THE DIRECTION OF A LICENSED PROFESSIONAL ENGINEER, TO ALTER THIS DOCUMENT.

Issued For:
5/19/22
PRELIMINARY CD'S

SHEET TITLE:
GENERAL NOTES

SHEET NUMBER:
GN-3

GENERAL CONCRETE WORK NOTES:

PART 1 - GENERAL

1.1 SCOPE:

A. FORM WORK, REINFORCING STEEL, ACCESSORIES, CAST-IN PLACE CONCRETE, FINISHING, CURING AND TESTING FOR STRUCTURAL CONCRETE FOUNDATIONS.

1.2REFERENCES:

A. ACI (AMERICAN CONCRETE INSTITUTE)

1. ACI 301 SPECIFICATION FOR STRUCTURAL CONCRETE FOR BUILDINGS.

2. ACI 304 RECOMMENDED PRACTICE FOR MEASURING, MIXING, TRANSPORTING AND PLACING CONCRETE.

3. ACI 305 RECOMMENDED PRACTICE FOR HOT WEATHER CONCRETING.

4. ACI 306 RECOMMENDED PRACTICE FOR COLD WEATHER CONCRETING.

5. ACI 308 STANDARD PRACTICE FOR CURING CONCRETING.

6. ACI 309 STANDARD PRACTICE FOR CONSOLIDATION OF CONCRETE.

7. ACI 318 BUILDING CODE REQUIREMENTS FOR REINFORCED CONCRETE.

8. ACI 347 RECOMMENDED PRACTICE FOR CONCRETE FORMWORK.

B. ASTM (AMERICAN SOCIETY FOR TESTING AND MATERIALS). THE APPLICABLE STANDARDS OF THE AMERICAN SOCIETY FOR TESTING AND MATERIALS ARE LISTED IN THE ACI STANDARDS AND ARE A PART OF THIS SPECIFICATION.

PART 2 - PRODUCTS

2.1REINFORCING MATERIALS:

A. REINFORCING BARS: ASTM A615, GRADE 60, PROPOSED DEFORMED BILLET-STEEL BARS, PLAIN FINISH.

B. FURNISH CHAIRS, BOLSTERS, BAR SUPPORTS, SPACERS AS REQUIRED FOR SUPPORT OF REINFORCING STEEL AND WIRE FABRIC.

2.2 CONCRETE MATERIALS:

A. PORTLAND CEMENT SHALL BE TYPE II, CONFORMING TO ASTM C-150.

B. AGGREGATE SHALL CONFORM TO ASTM C-33.

1. FINE AGGREGATE SHALL BE UNIFORMLY GRADED, CLEAN SHARP, WASHED NATURAL, OR CRUSHED SAND, FREE FROM ORGANIC IMPURITIES.

2. COARSE AGGREGATE SHALL BE NATURAL WASHED GRAVEL OR WASHED CRUSHED ROCK HAVING HARD, STRONG, DURABLE PIECES, FREE FROM ADHERENT COATINGS.

3. MAXIMUM SIZE OF COARSE AGGREGATE SHALL BE 3/4 INCH IN ACCORDANCE WITH THE REQUIREMENTS OF ASTM C-33 GRADATION SIZE NO. 67.

C. WATER USED IN CONCRETE MIX SHALL BE POTABLE, CLEAN, AND FREE FROM OILS, ACIDS, SALTS, CHLORIDES, ALKALI, SUGAR, VEGETABLE, OR OTHER INJURIOUS SUBSTANCES.

D. THE CONCRETE SHALL CONTAIN AN AIR-ENTRAINING ADMIXTURE COMPLYING WITH THE REQUIREMENTS OF ASTM C-260 AND ACI 212. 1R AND A WATER- REDUCING ADMIXTURE COMPLYING WITH THE REQUIREMENTS OF ASTM C-494 AND ACI 212. 1R. ADMIXTURES SHALL BE PURCHASED AND BATCHED IN LIQUID SOLUTION. THE USE OF CALCIUM CHLORIDE OR AN ADMIXTURE CONTAINING CALCIUM CHLORIDE IS PROHIBITED. ADMIXTURES SHALL BE OF THE SAME MANUFACTURER TO ASSURE COMPATIBILITY. ACCEPTABLE MANUFACTURERS ARE:

1. W.R. GRACE

2. SIKA CORP.

3. MASTER BUILDERS

4. EUCLID CHEMICAL CO.

E. CURING COMPOUND SHALL CONFORM TO ASTM C309, TYPE I, ID, CLASS A AND B AND ASTM C171 AS APPLICABLE.

2.3CONCRETE MIX:

A. PROPORTION CONCRETE MIX IN ACCORDANCE WITH REQUIREMENTS OF ACI 301. THE STRENGTH OF CONCRETE SHALL BE AS INDICATED ON THE DRAWINGS. WHERE STRENGTH IS NOT CLEARLY INDICATED, CONCRETE OF MINIMUM 28 DAY COMPRESSIVE STRENGTH OF 4000 P.S.I. SHALL BE USED.

B. THE CONCRETE MIX SHALL BE DESIGNED FOR A MAXIMUM SLUMP OF THREE INCHES AT THE POINT OF DISCHARGE. MIXES OF THE STIFFEST CONSISTENCY THAT CAN BE EFFICIENTLY PLACED SHALL BE USED.

C. ALL CONCRETE SHALL HAVE (3) TO FIVE (5) PERCENT ENTRAINED AIR.

D. ALL STRUCTURAL CONCRETE SHALL CONTAIN A WATER-REDUCING AGENT.

PART 3 - EXECUTION

3.1 GENERAL:

A. CONSTRUCT AND ERECT THE FORM WORK IN ACCORDANCE WITH ACI 301 AND ACI 347.

B. COLD-WEATHER CONCRETING SHALL BE IN ACCORDANCE WITH ACI 306.

C. HOT-WEATHER CONCRETING SHALL BE IN ACCORDANCE WITH ACI 305.

3.2 INSERTS, EMBEDDED COMPONENTS AND OPENINGS:

A. CONTRACTOR SHALL CHECK ALL CIVIL, ARCHITECTURAL, STRUCTURAL AND ELECTRICAL DRAWINGS FOR OPENINGS, SLEEVES, ANCHOR BOLTS, INSERTS AND OTHER ITEMS TO BE BUILT INTO THE CONCRETE WORK.

B. COORDINATE THE WORK OF OTHER SECTION IN FORMING AND SETTING OPENINGS. RECESSES, SLOTS, CHASES, ANCHORS, INSERTS AND OTHER ITEMS TO BE EMBEDDED.

C. EMBEDDED ITEMS SHALL BE SET ACCURATELY IN LOCATION, ALIGNMENT, ELEVATION AND PLUMBNESS, LOCATE AND MEASURE FROM ESTABLISHED SURVEYED REFERENCE BENCHMARKS.

D. EMBEDDED ITEMS SHALL BE ANCHORED INTO PLACE IN A MANNER TO PREVENT MOVEMENT DURING CONCRETE PLACEMENT AND CONSOLIDATION. COMPONENTS FORMING A PART OF A COMPLETE ASSEMBLY SHALL BE ALIGNED BEFORE ANCHORING INTO PLACE. PROVIDE TEMPORARY BRACING, ANCHORAGE, AND TEMPLATES AS REQUIRED TO MAINTAIN THE SETTING AND ALIGNMENT.

3.3 REINFORCEMENT PLACEMENT:

A. PLACE REINFORCEMENT ACCORDING TO CHECKED AND RELEASED DRAWINGS AND IN ACCORDANCE WITH ACI 301 AND ACI 318.

B. ACCURATELY POSITION, SUPPORT AND SECURE REINFORCEMENT AGAINST DISPLACEMENT FROM FORM WORK CONSTRUCTION OR CONCRETE PLACEMENT AND CONSOLIDATION. SUPPORT REINFORCING ON METAL CHAIRS, RUNNERS, BOLSTERS, SPACERS AND HANGERS.

C. SPLICES OF REINFORCING BARS SHALL BE CLASS B UNLESS SHOWN OTHERWISE ON THE DRAWINGS. SPLICES SHALL BE STAGGERED. FULL DEVELOPMENT LENGTH SHALL BE PROVIDED ACROSS JOINTS.

D. LOCATE REINFORCING TO PROVIDE CONCRETE COVER AND SPACING SHOWN ON THE DRAWINGS. MINIMUM COVER SHALL BE AS REQUIRED BY ACI 318.

E. WELDING OF AND TO ANY REINFORCING MATERIALS INCLUDING TACK WELDING OF CROSSING BARS IS STRICTLY PROHIBITED.

3.4 CONCRETE PLACEMENT:

A. PRIOR TO PLACING CONCRETE, THE FORMS AND REINFORCEMENT SHALL BE THOROUGHLY INSPECTED; ALL TEMPORARY BRACING, TIES AND CLEATS REMOVED; ALL OPENINGS FOR UTILITIES PROPERLY BOXED; ALL FORMS PROPERLY SECURED IN THERE CORRECT POSITION AND MADE TIGHT. ALL REINFORCEMENT AND EMBEDDED ITEMS SHALL BE SECURED IN THEIR PROPER LOCATIONS. ALL OLD AND DRY CONCRETE AND DIRT SHALL BE CLEANED OFF AND ALL STANDING WATER AND OTHER FOREIGN MATERIAL REMOVED.

B. PLACING CONCRETE SHALL BE IN ACCORDANCE WITH ACI 301 AND ACI 304 AND SHALL BE CARRIED OUT AT SUCH A RATE THAT THE CONCRETE PREVIOUSLY PLACED IS STILL PLASTIC AND INTEGRATED WITH THE FRESHLY PLACED CONCRETE. CONCRETING ONCE STARTED, SHALL BE CARRIED ON AS A CONTINUOUS OPERATION UNTIL THE SECTION IS COMPLETED. NO COLD JOINTS SHALL BE ALLOWED.

C. ALL CONCRETE SHALL BE THOROUGHLY CONSOLIDATED AND COMPACTED BY VIBRATION SPACING, RODDING, OR FORKING DURING THE OPERATION OF PLACING AND DEPOSITING IN ACCORDANCE WITH ACI 309. THE CONCRETE SHALL BE THOROUGHLY WORKED AROUND REINFORCEMENT, EMBEDDED ITEMS, AND INTO THE CORNER OF THE FORMS SO AS TO ELIMINATE ALL AIR AND STONE POCKETS.

3.5 FINISHING:

A. FINISHING OF THE FLOOR SLABS SHALL BE IN ACCORDANCE WITH ACI 302.1 SECTION 7.2 WITH A MINIMUM OF THREE TROWELINGS. THE SLAB FINISH TOLERANCE AS MEASURED IN ACCORDANCE WITH ASTM E 1155 SHALL HAVE AN OVERALL TEST NUMBER FOR FLATNESS, FF= 20 AND FOR LEVEL. FL=15. THE MINIMUM LOCAL NUMBER FOR FLATNESS, FF= 15 AND FOR LEVEL FL=10.

B. SURFACE OF FLOOR SLAB SHALL RECEIVE TWO COATS OF CLEAR SEALER/HARDNER.

C. ABOVE GRADE WALL SURFACES SHALL HAVE A SMOOTH FORM FINISH AS DEFINED IN CHAPTER 10 OF ACI 301.

3.6 CURING:

A. FRESHLY DEPOSITED CONCRETE SHALL BE PROTECTED FROM PREMATURE DRYING AND EXCESSIVELY HOT AND COLD TEMPERATURES AND SHALL BE MAINTAINED WITH MINIMUM MOISTURE LOSS AT A RELATIVELY CONSTANT TEMPERATURE FOR A PERIOD OF TIME NECESSARY FOR THE HYDRATION OF THE CEMENT AND PROPER HARDENING OF THE CONCRETE.

B. CONCRETE SHALL BE KEPT CONTINUOUSLY MOIST AT LEAST OVERNIGHT, IMMEDIATELY FOLLOWING THE INITIAL CURING. BEFORE THE CONCRETE HAS DRIED. ADDITIONAL CURING SHALL BE ACCOMPLISHED BY ONE OF THE FOLLOWING MATERIALS OR METHODS:

1. PONDING OR CONTINUOUS SPRINKLING.

2. ABSORPTIVE MAT OR FABRIC KEPT CONTINUOUSLY WET.

3. NON-ABSORPTIVE FILM (POLYETHYLENE) OVER PREVIOUSLY SPRINKLED SURFACE.

4. SAND OR OTHER COVERING KEPT CONTINUOUSLY WET.

5. CONTINUOUS STEAM (NOT EXCEEDING 150 F) OR VAPOR MIST BATH.

6. SPRAYED- ON CURING COMPOUND APPLIED IN TWO COATS, SPRAYED IN PERPENDICULAR DIRECTION

C. THE FINAL CURING SHALL CONTINUE UNTIL THE CUMULATIVE NUMBER OF DAYS OR FRACTION THEREOF, NOT NECESSARILY CONSECUTIVE, DURING WHICH TEMPERATURE OF THE AIR IN CONTACT WITH CONCRETE IS ABOVE 50F HAS TOTALED SEVEN (7) DAYS. CONCRETE SHALL NOT BE PERMITTED TO FREEZE DURING THE CURING PERIOD. RAPID DRYING AT THE END OF THE CURING PERIOD SHALL BE PREVENTED.

AT&T Site ID:
COL02568
6915 SPACE VILLAGE AVENUE
COLORADO SPRINGS, CO 80915

Tower Owner:
CROWN CASTLE
2055 SOUTH STEARMAN DRIVE
CHANDLER, AZ 85286

PREPARED FOR:
at&t Mobility
161 Inverness Drive West 2nd floor
Englewood, Colorado 80112

A&E:
TELCYTE INFRASTRUCTURE SERVICES
3450 N HIGLEY RD - SUITE 102,
MESA, AZ 85215

AT&T SITE NO:	COL02568
BU NO:	823722
DRAWN BY:	AK
CHECKED BY:	CM

REV	DATE	DESCRIPTION
A	2/25/22	PRELIMINARY CD'S
B	03/21/22	CLIENT REVISIONS
C	5/19/22	CLIENT REVISIONS

Licensor:
COLORADO LICENSED
TIM ALEXANDER
44563
EXP
10/31/2023
PROFESSIONAL ENGINEER
SIGNED, 19 MAY 2022

Issued For:
5/19/22
PRELIMINARY CD'S

SHEET TITLE:
GENERAL NOTES

SHEET NUMBER:
GN-4

GENERAL STEEL WORK NOTES:

PART 1 - GENERAL

1.1 SCOPE:

A. PROVIDE FABRICATION AND ERECTION OF STRUCTURAL STEEL AND OTHER ITEMS AS SHOWN ON THE DRAWINGS OR REQUIRED BY OTHER SECTIONS OF THESE SPECIFICATIONS.

1.2 REFERENCES:

A. AMERICAN INSTITUTE OF STEEL CONSTRUCTION (AISC). MANUAL OF STEEL CONSTRUCTION, ALLOWABLE STRESS DESIGN (ASD).

B. AMERICAN SOCIETY FOR TESTING AND MATERIALS (ASTM).
ASTM A36: STRUCTURAL STEEL
ASTM A53: PIPE, STEEL BLACK AND HOT DIPPED, ZINC-COATED WELDED AND SEAMLESS.
ASTM A108: STEEL BARS, CARBON, COLD FINISHED, STANDARD QUALITY.
ASTM A123: ZINC (HOT-DIPPED GALVANIZED) COATING ON IRON AND STEEL PRODUCTS.
ASTM A307: CARBON STEEL BOLTS AND STUDS, 60,000 P.S.I. TENSILE STRENGTH.
ASTM A325: HIGH-STRENGTH BOLT FOR STRUCTURAL STEEL JOINTS.
ASTM A490: HEAT-TREATED, STRUCTURAL STEEL BOLTS, 150 (KSI) (1035MPA) TENSILE STRENGTH.
ASTM A500: COLD-FORMED WELDED AND SEAMLESS CARBON STEEL STRUCTURAL TUBING IN ROUNDS AND SHAPES.
ASTM A563: CARBON AND ALLOY STEEL NUTS.
ASTM B695: COATINGS OF ZINC MECHANICALLY DEPOSITED ON IRON AND STEEL.
ASTM F436: HARDENED STEEL WASHERS.
ASTM F959: COMPRESSIBLE-WASHER-TYPE DIRECT TENSION INDICATOR FOR USE WITH STRUCTURAL FASTENERS.

C. AMERICAN WELDING SOCIETY (AWS):
AWS A5.1: COVERED CARBON STEEL ARC WELDING ELECTRODES.
AWS A5.5: LOW ALLOY STEEL COVERED ARC WELDING ELECTRODES.
AWS D1.1: STRUCTURAL WELDING CODE - STEEL.

D. RESEARCH COUNCIL ON STRUCTURAL CONNECTIONS (RCSC): "SPECIFICATIONS FOR STRUCTURAL JOINTS USING ASTM A325 BOLTS OR ASTM A490 BOLTS." AS ENDORSED BY AISC.

E. STEEL STRUCTURES PAINTING COUNCIL (SSPC):
SSPC-SP3: POWER TOOL CLEANING.
SSPC-PAINT 11: RED IRON OXIDE, ZINC CHROME, RAW LINSEED OIL OR ALKYD PAINT.

1.3 SUBMITTALS:

A. SUBMIT THE FOLLOWING FOR APPROVAL:

1. FABRICATION AND ERECTION DRAWINGS SHOWING ALL DETAILS, CONNECTIONS, MATERIAL DESIGNATIONS, AND ALL TOP STEEL ELEVATIONS.

B. WELDERS SHALL BE QUALIFIED AS PRESCRIBED IN AWS D1.1.

PART 2 - PRODUCTS

2.1 STRUCTURAL STEEL:

A. SHAPES, PLATES AND BARS SHALL CONFIRM TO ASTM A36.

B. STRUCTURAL TUBING SHALL CONFIRM TO ASTM A500, GRADE B. STEEL PIPE SHALL CONFIRM TO ASTM A53, TYPE E OR S, GRADE B.

2.2 ANCHOR BOLTS:

A. ANCHOR BOLTS SHALL CONFIRM TO ASTM A307 WITH HEAVY HEXAGONAL NUTS.

2.3 BOLTS:

A. COMMON (MACHINE) BOLTS SHALL CONFIRM TO ASTM A307 GRADE A AND NUTS TO ASTM A563. ONE COMMON BOLT ASSEMBLY SHALL CONSIST OF A BOLT. A HEAVY HEX NUT AND A HARDENED WASHER.

B. HIGH-STRENGTH BOLTS SHALL CONFORM TO ASTM A325; ONE HIGH STRENGTH BOLT ASSEMBLY SHALL CONSIST OF A HEAVY HEX STRUCTURAL BOLT, A HEAVY HEX NUT, A HARDENED WASHER CONFORMING TO ASTM F436. THE HARDENED WASHER SHALL BE INSTALLED AGAINST THE ELEMENT TURNED IN TIGHTENING. UNLESS NOTED OTHERWISE ON THE DRAWINGS, ALL CONNECTIONS SHALL BE BEARING TYPE CONNECTIONS.

2.4 WELDING ELECTRODES:

A. WELDING ELECTRODES SHALL COMPLY WITH AWS D1.1 USING A5.1 OR A5.5 E70XX AND SHALL BE COMPATIBLE WITH THE WELDING PROCESS SELECTED.

2.5 PRIMER:

A. PRIMER SHALL BE RED OXIDE-CHROMATE PRIMER COMPLYING WITH SSPC PAINT SPECIFICATION NO. 11.

PART 3 - EXECUTION

3.1 FABRICATION:

A. SHOP FABRICATE AND ASSEMBLY MATERIALS AS SPECIFIED HEREIN.

1. FABRICATE ITEMS OF STRUCTURAL STEEL IN ACCORDANCE WITH THE AISC-ASD SPECIFICATION, AND AS INDICATED ON THE APPROVED SHOP DRAWINGS.

2. ALL EXPOSED STRUCTURAL STEEL SHALL BE HOT DIP GALVANIZED PER ASTM.

3. PROPERLY MARK AND MATCH-MARK MATERIALS FOR FIELD ASSEMBLY AND FOR IDENTIFICATION AS TO LOCATION FOR WHICH INTENDED.

4. FABRICATE AND DELIVER IN A SEQUENCE WHICH WILL EXPEDITE ERECTION AND MINIMIZE FIELD HANDLING OF MATERIALS.

5. WHERE FINISHING IS REQUIRED, COMPLETE THE ASSEMBLY, INCLUDING THE WELDING OF UNITS, BEFORE START OF FINISHING OPERATIONS.

6. PROVIDE FINISH SURFACE OF MEMBERS EXPOSED IN THE FINAL STRUCTURE FREE FROM MARKINGS, BURNS, AND OTHER DEFECTS.

B. PROVIDE CONNECTIONS AS SPECIFIED HEREIN:

1. PROVIDE BOLTS AND WASHERS OF TYPES AND SIZE REQUIRED FOR COMPLETION OF FIELD ERECTION. USE 3/4 INCH DIAMETER A325 BOLTS UNLESS NOTED OTHERWISE.

2. INSTALL HIGH STRENGTH THREADED FASTENERS IN ACCORDANCE WITH RCSC "SPECIFICATION FOR STRUCTURAL JOINTS USING ASTM A325 OR ASTM A490 BOLTS."

3. WELDED CONSTRUCTION SHALL COMPLY WITH AWS D1.1 FOR PROCEDURES, APPEARANCE, QUALITY OF WELD, AND METHODS USED IN CORRECTING WELDED WORK.

4. THE FABRICATOR SHALL FURNISH AND INSTALL ERECTION CLIPS FOR FIT-UP OF WELDED CONNECTIONS.

5. DOUBLE ANGLE MEMBERS SHALL HAVE WELDED FILLERS SPACED IN ACCORDANCE WITH CHAPTER E4 OF THE AISC-ASD SPECIFICATION.

6. GUSSET AND STIFFENER PLATES SHALL BE 3/8 INCH THICK MINIMUM.

3.2 PRIMING:

A. STRUCTURAL STEEL SHALL BE PRIMED AS SPECIFIED HEREIN, UNLESS SHOWN OTHERWISE ON THE DRAWINGS.

B. STRUCTURAL STEEL SURFACE PREPARATION SHALL CONFIRM TO SSPC-SP3, "POWER TOOL CLEANING."

C. SURFACE PREPARATION AND PRIMER SHALL BE IN ACCORDANCE WITH AISC CODE OF STANDARD PRACTICE AS INCLUDED IN THE ASD MANUAL OF STEEL CONSTRUCTION.

D. MATERIALS SHALL REMAIN CLOSED UNTIL REQUIRED FOR USE, MANUFACTURER'S POT-LIFE REQUIREMENTS SHALL BE STRICTLY ADHERED TO.

E. PRIMER SHALL BE APPLIED TO DRY, CLEAN, PREPARED SURFACE AND UNDER FAVORABLE CONDITIONS IN ACCORDANCE WITH MANUFACTURER'S INSTRUCTIONS. UNLESS OTHERWISE RECOMMENDED BY THE MANUFACTURER PRIMING SHALL NOT BE DONE WHEN AMBIENT TEMPERATURE IS LESS THAN 50 DEGREE F. THE RELATIVE HUMIDITY IS MORE THAN 90 PERCENT, OR THE SURFACE TEMPERATURE IS LESS THAN 5 DEGREE F ABOVE THE DEW POINT.

F. GENERALLY ALL PRIMER SHALL BE SPRAY APPLIED. BRUSH OR ROLLER APPLICATION SHALL BE RESTRICTED TO TOUCHUP AND TO AREAS NOT ACCESSIBLE BY SPRAY GUN.

G. PRIMER SHALL BE UNIFORMLY APPLIED WITHOUT RUNS, SAGS, SOLVENT BLISTERS, DRY SPRAY OR OTHER BLEMISHES. ALL BLEMISHES AND OTHER IRREGULARITIES SHALL BE REPAIRED OR REMOVED AND THE AREA RE-COATED. SPECIAL ATTENTION SHALL BE PAID TO CREVICES, WELD LINES, BOLT HEADS, CORNERS, EDGES, ETC., TO OBTAIN THE REQUIRED NOMINAL FILM THICKNESS.

H. THE DRY FILM THICKNESS OF THE PRIMER SHALL BE 2.0 MILS.

I. IF THE PRIMER IS DAMAGED BY WELDING OR PHYSICAL ABUSE, THE AREA SHALL BE TOUCHED UP AND REPAIRED. THE TOUCHUP PAINT SHALL BE COMPATIBLE WITH THE APPLIES PRIMER WITH MINIMUM DRY FILM THICKNESS OF 1.5 MILS.

3.3 INSTALLATION:

A. INSTALLATION OF STRUCTURAL STEEL SHALL COMPLY WITH AISC "CODE OF STANDARD PRACTICE."

B. STRUCTURAL FIELD WELDING SHALL BE DONE BY THE ELECTRIC SUBMERGED OR SHIELDED METAL ARC PROCESS. WELDED CONSTRUCTION SHALL COMPLY WITH AWS D1.1.

C. PROVIDE ANCHOR BOLTS AND OTHER CONNECTORS REQUIRED FOR SECURING STRUCTURAL STEEL TO ELEVATOR SHAFT WALLS AND OTHER IN-PLACE WORK. PROVIDE TEMPLATES AND OTHER DEVICES NECESSARY FOR PRESETTING BOLTS AND ANCHORS TO ACCURATE LOCATIONS.

D. SPLICE MEMBERS ONLY WHERE INDICATED ON THE DRAWINGS.

E. ANY GAS CUTTING TORCHES HAVE TO BE APPROVED IN WRITING BY THE PROJECT STRUCTURAL ENGINEER.

F. PROVIDE TEMPORARY SHORING BRACING WITH CONNECTIONS OF SUFFICIENT STRENGTH TO BEAR IMPOSED LOADS. REMOVE TEMPORARY CONNECTIONS AND MEMBERS WHEN PERMANENT MEMBERS ARE IN PLACE AND THE FINAL CONNECTIONS HAVE BEEN MADE.

G. ALIGN AND ADJUST MEMBERS, AND OTHER SURFACES WHICH WILL BE IN THE PERMANENT CONTACT, BEFORE ASSEMBLY.

H. HIGH-STRENGTH BOLTS AS A MINIMUM, SHALL BE TIGHTENED TO A "SNUG TIGHT" CONDITION AS DEFINED IN THE LATEST AISC SPECIFICATION. ALL HIGH-STRENGTH BOLTS SPECIFIED ON THE DESIGN DRAWINGS TO BE USED IN PRETENSIONED OR SLIP-CRITICAL JOINTS SHALL BE TIGHTENED TO A BOLT TENSION NOT LESS THAN THAT GIVEN IN AISC TABLE J3.1. INSTALLATION SHALL BE BY ANY OF THE FOLLOWING METHODS: TURN-OF NUT METHOD, A DIRECT-TENSION-INDICATOR, TWIST-OFF-TYPE TENSION-CONTROL BOLT, CALIBRATED WRENCH, OR ALTERNATIVE DESIGN BOLT.

STRUCTURAL NOTES

1.0 GENERAL CONDITIONS

1.1 DESIGN AND CONSTRUCTION OF ALL WORK SHALL CONFORM TO THE IBC 2006 EDITION AND ALL OTHER APPLICABLE STATE CODES, ORDINANCES, AND REGULATIONS. IN CASE OF CONFLICT BETWEEN THE CODES, STANDARDS, AND REGULATIONS. SPECIFICATIONS, GENERAL NOTES AND/OR MANUFACTURER'S REQUIREMENTS. USE THE MOST STRINGENT PROVISION.

1.2 IT IS THE EXPRESS INTENT OF THE PARTIES INVOLVED IN THIS PROJECT THAT THE CONTRACTOR OR SUBCONTRACTOR OR INDEPENDENT CONTRACTOR OR THEIR RESPECTIVE EMPLOYEES SHALL EXCULPATE THE ARCHITECT, THE ENGINEER, THE CONSTRUCTION MANAGER, THE OWNER, AND THEIR AGENTS, FROM ANY LIABILITY WHATSOEVER AND HOLD THEM HARMLESS AGAINST LOSS, DAMAGES, LIABILITY OR ANY EXPENSE ARISING IN ANY MATTER FROM THE WRONGFUL OR NEGLIGENT ACT, OR FAILURE TO CARRY OUT THE WORK IN ACCORDANCE WITH THE CONTRACT DOCUMENTS, OR THE CONSTRUCTION MEANS, METHODS, TECHNIQUES, SEQUENCES OR PROCEDURES OR FAILURE TO CONFORM TO THE STATE SCAFFOLDING ACT IN CONNECTION WITH THE WORK.

1.3 DO NOT SCALE DRAWINGS.

1.4 VERIFY ALL EQUIPMENT MOUNTING DIMENSIONS PER MANUFACTURER DRAWINGS.

1.5 SUBMIT ONE SEPIA AND TWO PRINTS OF ALL STRUCTURAL SHOP DRAWINGS. MARKED UP SEPIA SHALL BE RETURNED.

1.6 DESIGN LOADS ARE:

WIND SPEED	115 MPH 3 SEC EXP C	
SNOW LOAD	300 PSF	
SEISMIC ZONE	SBC & UBC - 4 AND IBC - E	
SHELTER WEIGHT:	WITHOUT EQUIPMENT	5,500lbs
	WITH EQUIPMENT	7,500lbs

2.0 STEEL

2.1 MEET OR EXCEED THE FOLLOWING CODES & STANDARDS (LATEST EDITION) EXCEPT AS NOTED:

A. STRUCTURAL STEEL...AISC SPECIFICATION & CODE OF STANDARD PRACTICE
-SHAPES AND PLATES...ASTM A572
-PLATES BENT OR COLD FORMED...ASTM A 283, GRADE C
-PIPES...ASTM A 53, GRADE B
-STRUCTURAL SHEETS, HOT ROLLED...ASTM A 510
-COLD FORMED STEEL TUBING...ASTM A 500 GRADE B
-BOLTS, NUTS & WASHERS FOR ANCHOR BOLTS AND SECONDARY CONNECTIONS...ASTM A307
-ALL STEEL SHALL BE HOT-DIPPED GALVANIZED.

B. WELDS...AWS E 70XX
EXCEPTION IS TAKEN TO AISC CODE OF STANDARD PRACTICE PARAGRAPH 4.2.1 REGARDING OWNERS AND FABRICATOR'S RESPONSIBILITY FOR CONNECTION DESIGN AND DETAILING IS THE CONTRACTORS RESPONSIBILITY. ENGINEER'S REVIEW OF SHOP DRAWINGS IS FOR GENERAL CONSIDERATIONS ONLY AND DOES NOT CONSTITUTE AN ACCEPTANCE OF THESE RESPONSIBILITIES BY THE OWNER AND/OR ENGINEER.

3.0 FIBER REINFORCED PLASTIC

3.1 ALL FRP MATERIAL SHALL BE EXTREN SERIES 500 OR EQUIV.

3.2 ALL ADHESIVE SHALL BE PLEXUS METHACRYLATE ADHESIVE OR EQUIV.

3.3 ALL FRP CONNECTIONS SHALL BE FULL BONDED EACH SIDE WITH 3 /8" PLATE AND MINIMUM (2) 3/8" PAN HEAD FRP SCREWS PER MEMBER.

3.4 ALL PANELS SHALL BE FULL BONDED W/ 3/8" PAN HEAD FRP SCREWS AT 12" O.C.

AT&T Site ID:
COL02568
6915 SPACE VILLAGE AVENUE
COLORADO SPRINGS, CO 80915

Tower Owner:
CROWN CASTLE
2055 SOUTH STEARMAN DRIVE
CHANDLER, AZ 85286

PREPARED FOR:
at&t Mobility
161 Inverness Drive West 2nd floor
Englewood, Colorado 80112

A&E:
TELCYTE INFRASTRUCTURE SERVICES
3450 N HIGLEY RD - SUITE 102,
MESA, AZ 85215

AT&T SITE NO:	COL02568
BU NO:	823722
DRAWN BY:	AK
CHECKED BY:	CM

REV	DATE	DESCRIPTION
A	2/25/22	PRELIMINARY CD'S
B	03/21/22	CLIENT REVISIONS
C	5/19/22	CLIENT REVISIONS

Licensor:
COLORADO LICENSED
TIM ALEXANDER
44563
EXP
10/31/2023
PROFESSIONAL ENGINEER
SIGNED, 19 MAY 2022

Issued For:
5/19/22
PRELIMINARY CD'S

SHEET TITLE:
GENERAL NOTES

SHEET NUMBER:
GN-5

GENERAL ELECTRICAL NOTES:

PART 1 - GENERAL

1.1 GENERAL CONDITIONS:

A. CONTRACTOR SHALL INSPECT THE EXISTING SITE CONDITIONS PRIOR TO SUBMITTING BID. ANY QUESTIONS ARISING DURING THE BID PERIOD IN REGARDS TO THE CONTRACTORS FUNCTIONS, THE SCOPE OF WORK, OR ANY OTHER ISSUE RELATED TO THIS PROJECT SHALL BE BROUGHT UP DURING THE BID PERIOD WITH THE PROJECT MANAGER FOR CLARIFICATION, NOT AFTER THE CONTRACT HAS BEEN AWARDED.

B. THE CONTRACTOR SHALL OBTAIN PERMITS, LICENSES, MAKE ALL DEPOSITS, AND PAY ALL FEES REQUIRED FOR THE CONSTRUCTION PERFORMANCE FOR THE WORK UNDER THIS SECTION.

C. DRAWINGS SHOW THE GENERAL ARRANGEMENT OF ALL SYSTEMS AND COMPONENTS COVERED UNDER THIS SECTION. THE CONTRACTOR SHALL VERIFY ALL DIMENSIONS. DRAWING SHALL NOT BE SCALED TO DETERMINE DIMENSIONS.

1.2 LAWS, REGULATIONS, ORDINANCES, STATUTES AND CODES.

A. ALL WORK SHALL BE INSTALLED IN ACCORDANCE WITH THE LATEST EDITION OF THE NATIONAL ELECTRICAL CODE, AND ALL APPLICABLE LOCAL LAWS, REGULATIONS, ORDINANCES, STATUTES AND CODES. CONDUIT BENDS SHALL BE THE RADIUS BEND FOR THE TRADE SIZE OF CONDUIT IN COMPLIANCE WITH THE LATEST EDITIONS OF NEC.

1.3 REFERENCES:

A. THE PUBLICATIONS LISTED BELOW ARE PART OF THIS SPECIFICATION. EACH PUBLICATION SHALL BE THE LATEST REVISION AND ADDENDUM IN EFFECT ON THE DATE. THIS SPECIFICATION IS ISSUED FOR CONSTRUCTION UNLESS OTHERWISE NOTED. EXCEPT AS MODIFIED BY THE REQUIREMENT SPECIFIED HEREIN OR THE DETAILS OF THE DRAWINGS, WORK INCLUDED IN THIS SPECIFICATION SHALL CONFORM TO THE APPLICABLE PROVISION OF THESE PUBLICATIONS.

1. ANSI/IEEE (AMERICAN NATIONAL STANDARDS INSTITUTE)
2. ASTM (AMERICAN SOCIETY FOR TESTING AND MATERIALS)
3. ICE (INSULATED CABLE ENGINEERS ASSOCIATION)
4. NEMA (NATIONAL ELECTRICAL MANUFACTURER'S ASSOCIATION)
5. NFPA (NATIONAL FIRE PROTECTION ASSOCIATION)
6. OSHA (OCCUPATIONAL SAFETY AND HEALTH ADMINISTRATION)
7. UL (UNDERWRITERS LABORATORIES. INC.)
8. AT&T GROUNDING AND BONDING STANDARDS TP-76416

1.4 SCOPE OF WORK:

A. WORK UNDER THIS SECTION SHALL CONSIST OF FURNISHING ALL LABOR, MATERIAL, AND ASSOCIATED SERVICES REQUIRED TO COMPLETE REQUIRED CONSTRUCTION AND BE OPERATIONAL.

B. ALL ELECTRICAL EQUIPMENT UNDER THIS CONTRACT SHALL BE PROPERLY TESTED, ADJUSTED, AND ALIGNED BY THE CONTRACTOR.

C. THE CONTRACTOR SHALL BE RESPONSIBLE FOR ALL EXCAVATING, DRAINING, TRENCHES, BACKFILLING, AND REMOVAL OF EXCESS DIRT.

D. THE CONTRACTOR SHALL FURNISH TO THE OWNER WITH CERTIFICATES OF A FINAL INSPECTION AND APPROVAL FROM THE INSPECTION AUTHORITIES HAVING JURISDICTION.

E. THE CONTRACTOR SHALL PREPARE A COMPLETE SET OF AS-BUILT DRAWINGS, DOCUMENT ALL WIRING EQUIPMENT CONDITIONS, AND CHANGES WHILE COMPLETING THIS CONTRACT. THE AS-BUILT DRAWINGS SHALL BE SUBMITTED AT COMPLETION OF THE PROJECT.

PART 2 - PRODUCTS

2.1 GENERAL:

A. ALL MATERIALS AND EQUIPMENT SHALL BE UL LISTED, NEW, AND FREE FROM DEFECTS.

B. ALL ITEMS OF MATERIALS AND EQUIPMENT SHALL BE ACCEPTABLE TO THE AUTHORITY HAVING JURISDICTION AS SUITABLE FOR THE USE INTENDED.

C. ALL EQUIPMENT SHALL BEAR THE UNDERWRITERS LABORATORIES LABEL OF APPROVAL, AND SHALL CONFORM TO REQUIREMENT OF THE NATIONAL ELECTRICAL CODE.

D. ALL OVERCURRENT DEVICES SHALL HAVE AN INTERRUPTING CURRENT RATING THAT SHALL BE GREATER THAN THE SHORT CIRCUIT CURRENT TO WHICH THEY ARE SUBJECTED, 10,000 AIC MINIMUM. VERIFY AVAILABLE SHORT CIRCUIT CURRENT DOES NOT EXCEED THE RATING OF ELECTRICAL EQUIPMENT IN ACCORDANCE WITH ARTICLE 110.24 NEC OR THE MOST CURRENT ADOPTED CODE PER THE GOVERNING JURISDICTION.

2.2 MATERIALS AND EQUIPMENT:

A. CONDUIT:

1. RIGID METAL CONDUIT (RMC) SHALL BE HOT-DIPPED GALVANIZED INSIDE AND OUTSIDE INCLUDING ENDS AND THREADS AND ENAMELED OR LACQUERED INSIDE IN ADDITION TO GALVANIZING.

2. LIQUIDTIGHT FLEXIBLE METAL CONDUIT SHALL BE UL LISTED.

3. CONDUIT CLAMPS, STRAPS AND SUPPORTS SHALL BE STEEL OR MALLEABLE IRON. ALL FITTINGS SHALL BE COMPRESSION AND CONCRETE TIGHT TYPE. GROUNDING BUSHINGS WITH INSULATED THROATS SHALL BE INSTALLED ON ALL CONDUIT TERMINATIONS.

4. NONMETALLIC CONDUIT AND FITTINGS SHALL BE SCHEDULE 40 PVC. INSTALL USING SOLVENT-CEMENT-TYPE JOINTS AS RECOMMENDED BY THE MANUFACTURER.

B. CONDUCTORS AND CABLE:

1. CONDUCTORS AND CABLE SHALL BE FLAME-RETARDANT, MOISTURE AND HEAT RESISTANT THERMOPLASTIC, SINGLE CONDUCTOR, COPPER, TYPE THHN/THWN-2, 600 VOLT, SIZE AS INDICATED, #12 AWG SHALL BE THE MINIMUM SIZE CONDUCTOR USED.

2. #10 AWG AND SMALLER CONDUCTOR SHALL BE SOLID OR STRANDED AND #8 AWG AND LARGER CONDUCTORS SHALL BE STRANDED.

3. SOLDERLESS, COMPRESSION-TYPE CONNECTORS SHALL BE USED FOR TERMINATION OF ALL STRANDED CONDUCTORS.

4. STRAIN-RELIEF SUPPORTS GRIPS SHALL BE HUBBELL KELLEMS OR APPROVED EQUAL. CABLES SHALL BE SUPPORTED IN ACCORDANCE WITH THE NEC AND CABLE MANUFACTURER'S RECOMMENDATIONS. ALL CONDUCTORS SHALL BE TAGGED AT BOTH ENDS OF THE CONDUCTOR, AT ALL PULL

5. BOXES, J-BOXES, EQUIPMENT AND CABINETS AND SHALL BE IDENTIFIED WITH APPROVED PLASTIC TAGS (ACTION CRAFT, BRADY, OR APPROVED EQUAL).

C. DISCONNECT SWITCHES:

1. DISCONNECT SWITCHES SHALL BE HEAVY DUTY, DEAD-FRONT, QUICK-MAKE, QUICK-BREAK, EXTERNALLY OPERABLE, HANDLE LOCKABLE AND INTERLOCK WITH COVER IN CLOSED POSITION, RATING AS INDICATED, UL LABELED FURNISHED IN NEMA 3R ENCLOSURE, SQUARE-D OR ENGINEERED APPROVED EQUAL.

D. CHEMICAL ELECTROLYTIC GROUNDING SYSTEM:

1. INSTALL CHEMICAL GROUNDING AS REQUIRED. THE SYSTEM SHALL BE ELECTROLYTIC MAINTENANCE FREE ELECTRODE CONSISTING OF RODS WITH A MINIMUM #2 AWG CU EXOTHERMALLY WELDED PIGTAIL, PROTECTIVE BOXES, AND BACKFILL MATERIAL. MANUFACTURER SHALL BE LYNCOLE XIT GROUNDING ROD TYPES K2-(*)CS OR K2L-(*)CS (*) LENGTH AS REQUIRED.

2. GROUND ACCESS BOX SHALL BE A POLYPLASTIC BOX FOR NON-TRAFFIC APPLICATIONS, INCLUDING BOLT DOWN FLUSH COVER WITH "BREATHER" HOLES, XIT MODEL #XB-22. ALL DISCONNECT SWITCHES AND CONTROLLING DEVICES SHALL BE PROVIDED WITH ENGRAVED LAMICOID NAMEPLATES INDICATING EQUIPMENT CONTROLLED, BRANCH CIRCUITS ID NUMBERING, AND THE ELECTRICAL POWER SOURCE.

3. BACKFILL MATERIAL SHALL BE LYNCONITE AND LYNCOLE GROUNDING GRAVEL.

E. SYSTEM GROUNDING:

1. ALL GROUNDING COMPONENTS SHALL BE TINNED AND GROUNDING CONDUCTOR SHALL BE #2 AWG BARE, SOLID, TINNED, COPPER. ABOVE GRADE GROUNDING CONDUCTORS SHALL BE INSULATED WHERE NOTED.

2. GROUNDING BUSES SHALL BE BARE, TINNED, ANNEALED COPPER BARS OF RECTANGULAR CROSS SECTION. STANDARD BUS BARS MGB, SHALL BE FURNISHED AND INSTALLED BY THE CONTRACTOR. THEY SHALL NOT BE FABRICATED OR MODIFIED IN THE FIELD. ALL GROUNDING BUSES SHALL BE IDENTIFIED WITH MINIMUM 3/4" LETTERS BY WAY OF STENCILING OR DESIGNATION PLATE.

3. CONNECTORS SHALL BE HIGH-CONDUCTIVITY, HEAVY DUTY, LISTED AND LABELED AS GROUNDING CONNECTORS FOR THE MATERIALS USED. USE TWO-HOLE COMPRESSION LUGS WITH CLEAR HEAT SHRINK FOR MECHANICAL CONNECTIONS. USE TWO-HOLE COMPRESSION LUGS WITH INSPECTION WINDOW AND CLEAR HEAT SHRINK.

4. EXOTHERMIC WELDED CONNECTIONS SHALL BE PROVIDED IN KIT FORM AND SELECTED FOR THE SPECIFIC TYPES, SIZES, AND COMBINATIONS OF CONDUCTORS AND OTHER ITEMS TO BE CONNECTED.

5. GROUND RODS SHALL BE ERICO #615800, COPPER-CLAD STEEL WITH HIGH-STRENGTH STEEL CORE AND ELECTROLYTIC-GRADE COPPER OUTER SHEATH, MOLTEN WELDED TO CORE, 5/8"x10'-0". ALL GROUNDING RODS SHALL BE INSTALLED WITH INSPECTION SLEEVES.

6. INSTALL AN EQUIPMENT GROUNDING CONDUCTOR IN ALL CONDUITS IN COMPLIANCE WITH THE AT&T SPECIFICATIONS AND NEC. THE EQUIPMENT GROUNDING CONDUCTORS SHALL BE BONDED AT ALL JUNCTION BOXES, PULLBOXES, DISCONNECT SWITCHES, STARTERS, AND EQUIPMENT CABINETS.

F. OTHER MATERIALS:

1. THE CONTRACTOR SHALL PROVIDE OTHER MATERIALS, THOUGH NOT SPECIFICALLY DESCRIBED, WHICH ARE REQUIRED FOR A COMPLETELY OPERATIONAL SYSTEM AND PROPER INSTALLATION OF THE WORK.

2. PROVIDE PULL BOXES AND JUNCTION BOXES WHERE SHOWN OR REQUIRED BY NEC.

G. PANELS AND LOAD CENTERS:

1. ALL PANEL DIRECTORIES SHALL BE TYPEWRITTEN.

PART 3 - EXECUTION

3.1 GENERAL:

A. ALL MATERIAL AND EQUIPMENT SHALL BE INSTALLED IN STRICT ACCORDANCE WITH THE MANUFACTURER'S RECOMMENDATIONS.

B. B. EQUIPMENT SHALL BE TIGHTLY COVERED AND PROTECTED AGAINST DIRT OR WATER, AND AGAINST CHEMICAL OR MECHANICAL INJURY DURING INSTALLATION AND CONSTRUCTION PERIODS.

3.2 LABOR AND WORKMANSHIP:

A. ALL LABOR FOR THE INSTALLATION OF MATERIALS AND EQUIPMENT FURNISHED FOR THE ELECTRICAL SYSTEM SHALL BE INSTALLED BY EXPERIENCED WIREMEN, IN A NEAT AND WORKMAN-LIKE MANNER.

B. ALL ELECTRICAL EQUIPMENT SHALL BE ADJUSTED, ALIGNED AND TESTED BY THE CONTRACTOR AS REQUIRED TO PRODUCE THE INTENDED PERFORMANCE.

C. UPON COMPLETION OF WORK, THE CONTRACTOR SHALL THOROUGHLY CLEAN ALL EXPOSED EQUIPMENT, REMOVE ALL LABELS AND ANY DEBRIS, CRATING OR CARTONS AND LEAVE THE INSTALLATION FINISHED AND READY FOR OPERATION.

3.3 COORDINATION:

A. THE CONTRACTOR SHALL COORDINATE THE INSTALLATION OF ELECTRICAL ITEMS WITH THE OWNER-FURNISHED EQUIPMENT DELIVERY SCHEDULE TO PREVENT UNNECESSARY DELAYS IN THE TOTAL WORK.

3.4 INSTALLATION:

A. CONDUIT:

1. ALL ELECTRICAL WIRING SHALL BE INSTALLED IN CONDUIT AS SPECIFIED. NO CONDUIT OR TUBING OF LESS THAN 3/4 INCH TRADE SIZE.

2. PROVIDE RIGID PVC SCHEDULE 80 CONDUITS FOR ALL RISERS, RMC OTHERWISE NOTED. EMT MAY BE INSTALLED FOR EXTERIOR CONDUITS WHERE NOT SUBJECT TO PHYSICAL DAMAGE.

3. INSTALL SCH. 40 PVC CONDUIT WITH A MINIMUM COVER OF 24" UNDER ROADWAYS, PARKING LOTS, STREETS, AND ALLEYS. CONDUIT SHALL HAVE A MINIMUM COVER OF 18" IN ALL OTHER NON-TRAFFIC APPLICATIONS (REFER TO 2011 NEC, TABLE 300.5).

4. USE GALVANIZED FLEXIBLE STEEL CONDUIT WHERE DIRECT CONNECTION TO EQUIPMENT WITH MOVEMENT, VIBRATION, OR FOR EASE OF MAINTENANCE. USE LIQUID TIGHT, FLEXIBLE METAL CONDUIT FOR OUTDOOR APPLICATIONS. INSTALL GALVANIZED FLEXIBLE STEEL CONDUIT AT ALL POINTS OF CONNECTION TO EQUIPMENT MOUNTED ON SUPPORT TO ALLOW FOR EXPANSION AND CONTRACTION.

5. A RUN OF CONDUIT BETWEEN BOXES OR EQUIPMENT SHALL NOT CONTAIN MORE THAN THE EQUIVALENT OF THREE QUARTER-BENDS. CONDUIT BEND SHALL BE MADE WITH THE UL LISTED BENDER OR FACTORY 90 DEGREE ELBOWS MAY BE USED.

6. FIELD FABRICATED CONDUITS SHALL BE CUT SQUARE WITH A CONDUIT CUTTING TOOL AND REAMED TO PROVIDE A SMOOTH INSIDE SURFACE.

7. PROVIDE INSULATED GROUNDING BUSHING FOR ALL CONDUITS.

8. CONTRACTOR IS RESPONSIBLE FOR PROTECTING ALL CONDUITS DURING CONSTRUCTION. TEMPORARY OPENINGS IN THE CONDUIT SYSTEM SHALL BE PLUGGED OR CAPPED TO PREVENT ENTRANCE OF MOISTURE OR FOREIGN MATTER. CONTRACTOR SHALL REPLACE ANY CONDUITS CONTAINING FOREIGN MATERIALS THAT CANNOT BE REMOVED.

9. ALL CONDUITS SHALL BE SWABBED CLEAN BY PULLING AN APPROPRIATE SIZE MANDREL THROUGH THE CONDUIT BEFORE INSTALLATION OF CONDUCTORS OR CABLES. CONDUIT SHALL BE FREE OF DIRT AND DEBRIS.

10. INSTALL PULL STRINGS IN ALL CLEAN EMPTY CONDUITS. IDENTIFY PULL STRINGS AT EACH END.

11. INSTALL 2" HIGHLY VISIBLE AND DETECTABLE TAPE 12" ABOVE ALL UNDERGROUND CONDUITS AND CONDUCTORS.

12. CONDUITS SHALL BE INSTALLED IN SUCH A MANNER AS TO INSURE AGAINST COLLECTION OF TRAPPED CONDENSATION.

13. PROVIDE CORE DRILLING AS NECESSARY FOR PENETRATIONS TO ALLOW FOR RACEWAYS AND CABLES TO BE ROUTED THROUGH THE BUILDING. DO NOT PENETRATE STRUCTURAL MEMBERS. SLEEVES AND/OR PENETRATIONS IN FIRE RATED CONSTRUCTION SHALL BE EFFECTIVELY SEALED WITH FIRE RATED MATERIAL WHICH SHALL MAINTAIN THE FIRE RATING OF THE WALL OR STRUCTURE. FIRE STOPS AT FLOOR PENETRATIONS SHALL PREVENT PASSAGE OF WATER, SMOKE, FIRE, AND FUMES. ALL MATERIAL SHALL BE UL APPROVED FOR THIS PURPOSE.

B. CONDUCTORS AND CABLE:

1. ALL POWER WIRING SHALL BE COLOR CODED AS FOLLOWS:

DESCRIPTION	208/240/120 VOLT SYSTEMS
PHASE A	BLACK
PHASE B	RED
PHASE C	BLUE
NEUTRAL	WHITE
GROUNDING	GREEN

2. SPLICES SHALL BE MADE ONLY AT OUTLETS, JUNCTION BOXES, OR ACCESSIBLE RACEWAY CONDUITS APPROVED FOR THIS PURPOSE.

3. PULLING LUBRICANTS SHALL BE UL APPROVED. CONTRACTOR SHALL USE NYLON OR HEMP ROPE FOR PULLING CONDUCTOR OR CABLES INTO THE CONDUIT.

4. CABLES SHALL BE NEATLY TRAINED, WITHOUT INTERLACING, AND BE OF SUFFICIENT LENGTH IN ALL BOXES & EQUIPMENT TO PERMIT MAKING A NEAT ARRANGEMENT. CABLES SHALL BE SECURED IN A MANNER TO AVOID TENSION ON CONDUCTORS OR TERMINALS. CONDUCTORS SHALL BE PROTECTED FROM MECHANICAL INJURY AND MOISTURE. SHARP BENDS OVER CONDUIT BUSHINGS IS PROHIBITED. DAMAGED CABLES SHALL BE REMOVED AND REPLACED AT THE CONTRACTOR'S EXPENSE.

C. DISCONNECT SWITCHES:

1. INSTALL DISCONNECT SWITCHES LEVEL AND PLUMB. CONNECT TO WIRING SYSTEM AND GROUNDING SYSTEM AS INDICATED.

D. GROUNDING:

1. ALL METALLIC PARTS OF ELECTRICAL EQUIPMENT WHICH DO NOT CARRY CURRENT SHALL BE GROUNDED IN ACCORDANCE WITH THE REQUIREMENTS OF THE BUILDING MANUFACTURER, AT&T GROUNDING AND BONDING STANDARDS TP-76416, ND-00135, AND THE NATIONAL ELECTRICAL CODE.

2. PROVIDE ELECTRICAL GROUNDING AND BONDING SYSTEM INDICATED WITH ASSEMBLY OF MATERIALS, INCLUDING GROUNDING ELECTRODES, BONDING JUMPERS AND ADDITIONAL ACCESSORIES AS REQUIRED FOR A COMPLETE INSTALLATION.

3. ALL GROUNDING CONDUCTORS SHALL PROVIDE A STRAIGHT DOWNWARD PATH TO GROUND WITH GRADUAL BEND AS REQUIRED. GROUNDING CONDUCTORS SHALL NOT BE LOOPED OR SHARPLY BENT. ROUTE GROUNDING CONNECTIONS AND CONDUCTORS TO GROUND IN THE SHORTEST AND STRAIGHTEST PATHS POSSIBLE TO MINIMIZE TRANSIENT VOLTAGE RISES. BUILDINGS AND/OR NEW TOWERS GREATER THAN 75 FEET IN HEIGHT AND WHERE THE MAIN

4. GROUNDING CONDUCTORS ARE REQUIRED TO BE ROUTED TO GRADE, THE CONTRACTOR SHALL ROUTE TWO GROUNDING CONDUCTORS FROM THE ROOFTOP, TOWERS, AND WATER TOWERS GROUND RING, TO THE EXISTING GROUNDING SYSTEM, THE GROUNDING CONDUCTORS SHALL NOT BE SMALLER THAN #2 AWG COPPER. ROOFTOP GROUND RING SHALL BE BONDED TO THE EXISTING GROUNDING SYSTEM, THE BUILDING STEEL COLUMNS, LIGHTNING PROTECTION SYSTEM, AND BUILDING MAIN WATER LINE (FERROUS OR NONFERROUS METAL PIPING ONLY). SEE STANDARD 6.3.2.2.

5. TIGHTEN GROUNDING AND BONDING CONNECTORS, INCLUDING SCREWS AND BOLTS, IN ACCORDANCE WITH MANUFACTURER'S PUBLISHED TORQUE TIGHTENING VALUES FOR CONNECTORS AND BOLTS. WHERE MANUFACTURER'S TORQUING REQUIREMENTS ARE NOT AVAILABLE, TIGHTEN CONNECTIONS TO COMPLY WITH TIGHTENING TORQUE VALUES SPECIFIED IN UL TO ASSURE PERMANENT AND EFFECTIVE GROUNDING. CONTRACTOR SHALL VERIFY THE LOCATIONS OF GROUNDING TIE-IN-POINTS TO THE EXISTING

6. ALL UNDERGROUND GROUNDING CONNECTIONS SHALL BE MADE BY THE GROUNDING SYSTEM. EXOTHERMIC WELD PROCESS AND INSTALLED IN ACCORDANCE WITH THE MANUFACTURER'S INSTRUCTIONS.

7. ALL GROUNDING CONNECTIONS SHALL BE INSPECTED FOR TIGHTNESS. EXOTHERMIC WELDED CONNECTIONS SHALL BE APPROVED BY THE INSPECTOR HAVING JURISDICTION BEFORE BEING PERMANENTLY CONCEALED.

8. APPLY CORROSION-RESISTANCE FINISH TO FIELD CONNECTIONS AND PLACES WHERE FACTORY APPLIED PROTECTIVE COATINGS HAVE BEEN DESTROYED.

9. A SEPARATE, CONTINUOUS, INSULATED EQUIPMENT GROUNDING CONDUCTOR SHALL BE INSTALLED IN ALL FEEDER AND BRANCH CIRCUITS.

10. BOND ALL INSULATED GROUNDING BUSHINGS WITH A BARE 6 AWG GROUNDING CONDUCTOR TO A GROUND BUS.

11. DIRECT BURIED GROUNDING CONDUCTORS SHALL BE INSTALLED AT A NOMINAL DEPTH OF 36" MINIMUM BELOW GRADE, OR 6" BELOW THE FROST LINE, USE THE GREATER OF THE TWO DISTANCES.

12. ALL GROUNDING CONDUCTORS EMBEDDED IN OR PENETRATING CONCRETE SHALL BE INSTALLED IN SCHEDULE 40 PVC CONDUIT.

13. THE INSTALLATION OF CHEMICAL ELECTROLYTIC GROUNDING SYSTEM IN STRICT ACCORDANCE WITH MANUFACTURER'S INSTRUCTIONS. REMOVE SEALING TAPE FROM LEACHING AND BREATHER HOLES. INSTALL PROTECTIVE BOX FLUSH WITH GRADE.

14. DRIVE GROUND RODS UNTIL TOPS ARE A MINIMUM DISTANCE OF 36" DEPTH OR 6" BELOW FROST LINE, USING THE GREATER OF THE TWO DISTANCES.

15. IF COAX ON THE ICE BRIDGE IS MORE THAN 6 FT. FROM THE GROUND BAR AT THE BASE OF THE TOWER, A SECOND GROUND BAR WILL BE NEEDED AT THE END OF THE ICE BRIDGE, TO GROUND THE COAX CABLE GROUNDING KITS AND IN-LINE ARRESTORS

16. CONTRACTOR SHALL REPAIR, AND/OR REPLACE, EXISTING GROUNDING SYSTEM COMPONENTS DAMAGED DURING CONSTRUCTION AT THE CONTRACTORS EXPENSE.

3.5 ACCEPTANCE TESTING

A. CERTIFIED PERSONNEL USING CERTIFIED EQUIPMENT SHALL PERFORM REQUIRED TESTS AND SUBMIT WRITTEN TEST REPORTS UPON COMPLETION.

B. WHEN MATERIAL AND/OR WORKMANSHIP IS FOUND NOT TO COMPLY WITH THE SPECIFIED REQUIREMENTS, THE NON-COMPLYING ITEMS SHALL BE REMOVED FROM THE PROJECT SITE AND REPLACED WITH ITEMS COMPLYING WITH THE SPECIFIED REQUIREMENTS PROMPTLY AFTER RECEIPT OF NOTICE FOR NON-COMPLIANCE.

C. TEST PROCEDURES;

1. ALL FEEDERS SHALL HAVE INSULATION TESTED AFTER INSTALLATION, BEFORE CONNECTION TO DEVICES. THE CONDUCTORS SHALL TEST FREE FROM SHORT CIRCUITS AND GROUNDS. TESTING SHALL BE FOR ONE MINUTE USING 1000V DC. PROVIDE WRITTEN DOCUMENTATION FOR ALL TEST RESULTS.

2. PRIOR TO ENERGIZING CIRCUITRY, TEST WIRING DEVICES FOR ELECTRICAL CONTINUITY AND PROPER POLARITY CONNECTIONS.

3. MEASURE AND RECORD VOLTAGES BETWEEN PHASES AND BETWEEN PHASE CONDUCTORS AND NEUTRALS. SUBMIT A REPORT OF MAXIMUM AND MINIMUM VOLTAGES

4. PERFORM GROUNDING TEST TO MEASURE GROUNDING RESISTANCE OF GROUNDING SYSTEM USING THE IEEE STANDARD 3-POINT "FALL-OF-POTENTIAL" METHOD. PROVIDE PLOTTED TEST VALUES AND LOCATION SKETCH. NOTIFY THE ENGINEER IMMEDIATELY IF MEASURED VALUE IS OVER 5 OHMS.

AT&T Site ID:
COL02568
6915 SPACE VILLAGE AVENUE
COLORADO SPRINGS, CO 80915

Tower Owner:
CROWN CASTLE
2055 SOUTH STEARMAN DRIVE
CHANDLER, AZ 85286

PREPARED FOR:
at&t Mobility
161 Inverness Drive West 2nd floor
Englewood, Colorado 80112

A&E:
TELCYTE INFRASTRUCTURE SERVICES
3450 N HIGLEY RD - SUITE 102,
MESA, AZ 85215

AT&T SITE NO:	COL02568
BU NO:	823722
DRAWN BY:	AK
CHECKED BY:	CM

REV	DATE	DESCRIPTION
A	2/25/22	PRELIMINARY CD'S
B	03/21/22	CLIENT REVISIONS
C	5/19/22	CLIENT REVISIONS

Licensor:

COLORADO LICENSED
TIM ALEXANDER
44563
EXP
10/31/2023
PROFESSIONAL ENGINEER
SIGNED, 19 MAY 2022

Issued For:
5/19/22
PRELIMINARY CD'S

SHEET TITLE:
GENERAL NOTES

SHEET NUMBER:
GN-6

1'–8"

1'–3"

Property of AT&T

Authorized Personnel Only

In case of emergency, or prior to performing maintenance on this site, call _____ and reference cell site number _____

FA # _____

at&t

ATT AL APO 1520

NOTES:
1. PLACE SIGN ON ROOM, SHELTER OR CABINET DOOR.

6 DOOR SIGN
N.T.S.

AT&T ABOVEGROUND FUEL STORAGE SYSTEMS
SIGNS AND LABELING REQUIREMENTS

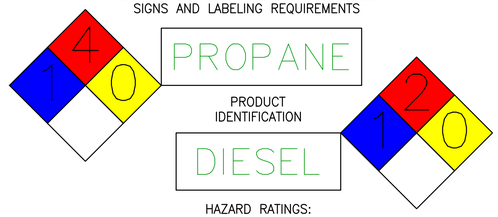

HAZARD RATINGS:
9 O'CLOCK – HEALTH
12 O'CLOCK – FLAMMABILITY
3 O'CLOCK – INSTABILITY
6 O'CLOCK – SPECIAL

COMBUSTIBLE

FLAMMABLE

NO SMOKING

SIGNS MUST BE OF DURABLE MATERIAL WITH RED LETTERING ON WHITE BACKGROUND. LETTERS SHALL NOT BE LESS THAN 3 INCHES (762 mm) IN HEIGHT. SIGNS SHALL NOT BE OBSTRUCTED OR REMOVED AND SHALL BE IN ENGLISH AS A PRIMARY LANGUAGE. COMBUSTIBLE SIGN MAY ALSO BE WHITE LETTER ON RED BACKGROUND

NOTES:
1. PLACE AT DOOR OR TANK.
2. SEE SIGN PLACEMENT TABLE IN A–12 FOR ADDITIONAL INFORMATION

5 FUEL STORAGE SIGN
N.T.S.

NFPA 704 HAZARD IDENTIFICATION
SYSTEM 15" DIAMOND

INFORMATION

Federal Communications Commission
Tower Registration Number

1 2 3 4 5 6 7

Posted in accordance with Federal Communications Commission rules on antenna tower registration 47CFR 17.4 (g).

NOTES:
1. 12" x 8" ALUMINUM.
2. REQUIREMENT IS SPECIFIED IN SECTION 4 OF CNTP.
3. POSTED AT BASE OF TOWER AND AT EACH ENTRANCE POINT.
4. SEE SIGN PLACEMENT TABLE IN A–12 FOR ADDITIONAL INFORMATION

4 FCC TOWER REG. (ASRN)
N.T.S.

1'–2"

10"

DANGER

NO TRESPASSING

NOTES:
1. PLACE SIGN ON GATE OR DOOR AND EACH SIDE OF FENCED COMPOUND.
2. PLACE SIN ON AT&T COMPOUND ONLY.
4. SEE SIGN PLACEMENT TABLE IN A–12 FOR ADDITIONAL INFORMATION

3 NO TRESPASSING SIGN
N.T.S.

2'–0"

2'–0"

Property of AT&T

Authorized Personnel Only

No Trespassing
Violaters will be Prosecuted

In case of emergency, or prior to performing maintenance on this site, call _____ and reference cell site number _____

at&t

NOTES:
1. ALUMINUM SIGN.
2. PLACE AT MAIN ENTRANCE GATES TO COMPOUND.
3. SEE SIGN PLACEMENT TABLE IN A–12 FOR ADDITIONAL INFORMATION.

2 GATE SIGN
N.T.S.

INFORMATION

AT&T Mobility operates telecommunications antennas at this location. Remain at least 3 feet away from any antenna and obey all posted signs.

Contact the owner(s) of the antenna(s) before working closer then 3 feet from the antenna(s)

Contact AT&T Mobility at _____ prior to performing any maintenance or repairs near AT&T antennas

This is site# _____

Contact the management office if this door/hatch/gate is found unlocked.

INFORMACION

En esta propiedad se ubican antenas de telecommunicaciones operadas por AT&T Mobility. Favor mantener una distancia de no menos de 3 pies y obedecer todos los avisos.

Comuniquese con el propietario o los propietarios de las antenas antes de trabajar o caminar a una distancia de menos de 3 pies de la antena

Comuniquese con AT&T Mobility _____ antes de realizar cualquier mantenimiento a reparaciones cerca de las antenas de AT&T Mobility.

Esta es la estación base número _____

Favor comunicarse can la oficina de la administración del edificio si esta puerta o compuerta se encuentra sin candado

INFORMATION SIGN 1:
1. 8" X 12" ALUMINUM.
2. PLACE AT ENTRANCE (GATE, DOOR, HATCHWAY, ETC).
3. POSTED ADJACENT TO CAUTION (YELLOW) SIGN.
4. BUILDING OWNER MAY HAVE LIMITATIONS ON WHERE CAN BE POSTED.
5. SEE SIGN PLACEMENT TABLE IN A–12 FOR ADDITIONAL INFORMATION

INFORMATION

ACTIVE ANTENNAS ARE MOUNTED

☐ ON THE OUTSIDE FACE OF THIS BUILDING

☐ BEHIND THIS PANEL

☐ ON THIS STRUCTURE

STAY BACK A MINIMUM OF 3 FEET FROM THESE ANTENNAS

Contact AT&T Mobility at _____ and follow their instructions prior to performing any maintenance or repairs closer than 3 feet from the antennas.

This is AT&T Mobility site _____
AT&T Mobility

INFORMATION SIGN 2:
1. NON–METALLIC (VINYL OR SIMILAR WEATHERPROOF MATERIAL) LABEL WITH AN ADHESIVE BACKING.
2. APPROXIMATELY 5 X 7 INCHES.

POSTING:
1. ACTIVE ANTENNAS BEHIND A RADIO TRANSPARENT PANEL. A NON_METALLIC VERSION WITH AN ADHESIVE BACKING SHOULD BE AFFIXED TO THE FACE OF THE RADIO TRANSPARENT PANEL CONCEALING THE ANTENNAS.
2. ANTENNAS MOUNTED ON THE OUTSIDE FACE OF A BUILDING. A METALLIC OR NON–METALLIC VERSION SHOULD BE MOUNTED ON THE PARAPETS INSIDE WALL DIRECTLY ABOVE THE ANTENNA.
3. ROOFTOP ANTENNAS MOUNTED ON SUPPORT STRUCTURES. A METALLIC OR NON–METALLIC VERSION (DEPENDING UPON MOUNTING CONDITIONS) SHOULD BE MOUNTED ON THE SUPPORT STRUCTURE, OR VERY NEAR IT, IN SUCH A MANNER THAT THE SIGN IS CLEARLY ASSOCIATED WITH THE STRUCTURE.
4. ANTENNAS THAT ARE STAND–ALONE (E.G., LAMP POSTS, STADIUMS) IN AREAS WHERE THERE IS LITTLE POTENTIAL FOR EXCEEDING THE GENERAL POPULATION/UNCONTROLLED MPE EXCEPT, PERHAPS, VERY CLOSE TO THE ANTENNA. IN THIS CASE, THE INFORMATION SIGN 2 WOULD BE MOUNTED CLOSE TO THE ANTENNA IN ORDER TO ALERT MAINTENANCE WORKERS.
5. SEE SIGN PLACEMENT TABLE FOR ADDITIONAL INFORMATION.

1 RADIO FREQUENCY INFORMATION SIGN
N.T.S.

AT&T Site ID:
COL02568
6915 SPACE VILLAGE AVENUE
COLORADO SPRINGS, CO 80915

Tower Owner:
CROWN CASTLE
2055 SOUTH STEARMAN DRIVE
CHANDLER, AZ 85286

PREPARED FOR:
at&t Mobility
161 Inverness Drive West 2nd floor
Englewood, Colorado 80112

A&E:
TELCYTE INFRASTRUCTURE SERVICES
3450 N HIGLEY RD - SUITE 102,
MESA, AZ 85215

AT&T SITE NO:	COL02568
BU NO:	823722
DRAWN BY:	AK
CHECKED BY:	CM

REV	DATE	DESCRIPTION
A	2/25/22	PRELIMINARY CD'S
B	03/21/22	CLIENT REVISIONS
C	5/19/22	CLIENT REVISIONS

Licensor:
COLORADO LICENSED
JIM ALEXANDER
44563
EXP 10/31/2023
PROFESSIONAL ENGINEER
SIGNED, 19 MAY 2022

IT IS A VIOLATION OF LAW FOR ANY PERSON, UNLESS THEY ARE ACTING UNDER THE DIRECTION OF A LICENSED PROFESSIONAL ENGINEER, TO ALTER THIS DOCUMENT.

Issued For:
5/19/22
PRELIMINARY CD'S

SHEET TITLE:
SITE SIGNAGE

SHEET NUMBER:
GN-7

THIS IS NOT A SITE SURVEY

ALL PROPERTY BOUNDARIES, ORIENTATION OF TRUE NORTH AND STREET HALF-WIDTHS HAVE BEEN OBTAINED FROM A TAX PARCEL MAP AND EXISTING DRAWINGS AND ARE APPROXIMATE.

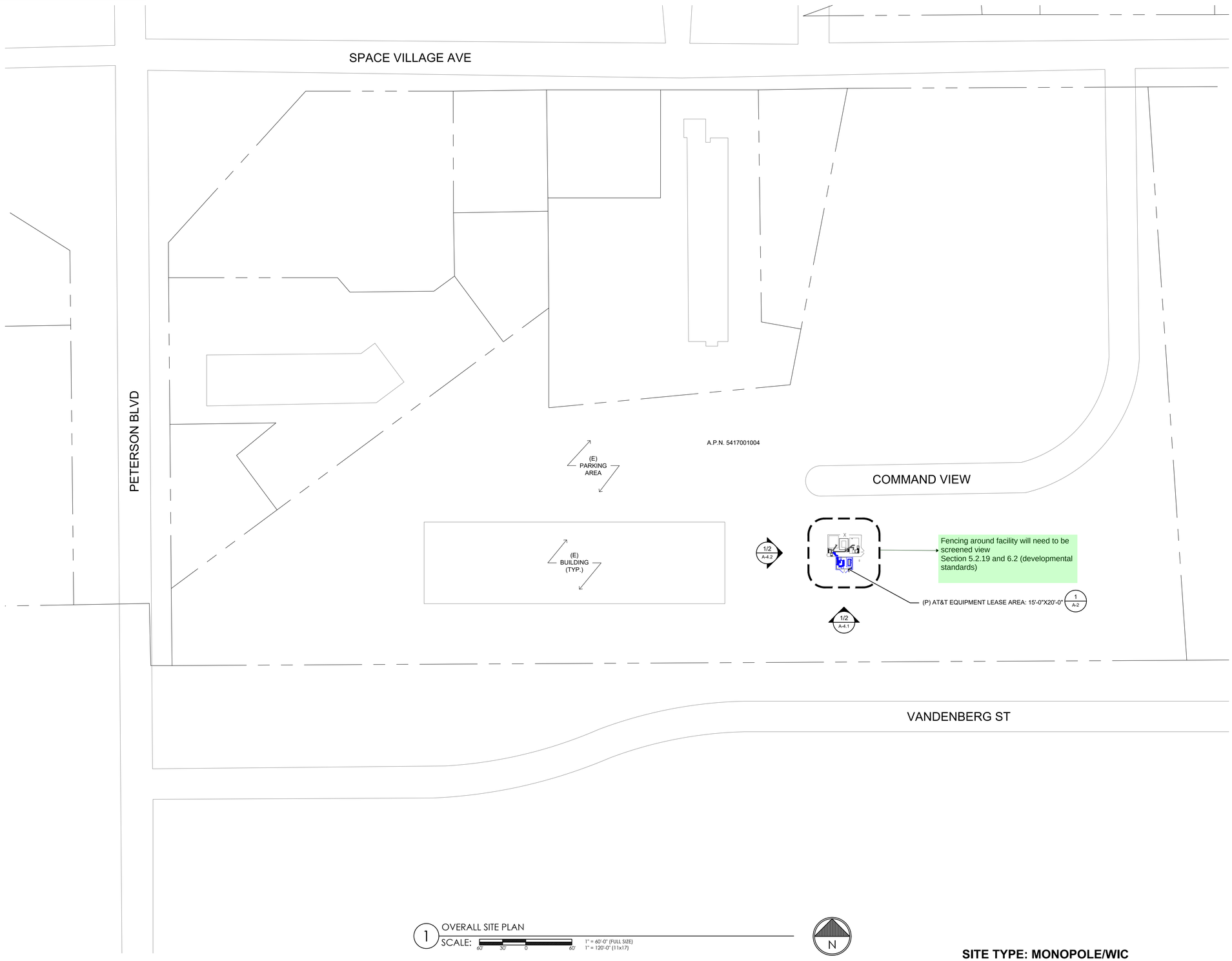

1 OVERALL SITE PLAN

SCALE: 60' 30' 0 60' 1" = 60'-0" (FULL SIZE) 1" = 120'-0" (11x17)

SITE TYPE: MONOPOLE/WIC

AT&T Site ID:
COL02568
6915 SPACE VILLAGE AVENUE
COLORADO SPRINGS, CO 80915

Tower Owner:
CROWN CASTLE
2055 SOUTH STEARMAN DRIVE
CHANDLER, AZ 85286

PREPARED FOR:
at&t Mobility
161 Inverness Drive West 2nd floor
Englewood, Colorado 80112

A&E:
TELCYTE INFRASTRUCTURE SERVICES
3450 N HIGLEY RD - SUITE 102,
MESA, AZ 85215

AT&T SITE NO:	COL02568
BU NO:	823722
DRAWN BY:	AK
CHECKED BY:	CM

REV	DATE	DESCRIPTION
A	2/25/22	PRELIMINARY CD'S
B	03/21/22	CLIENT REVISIONS
C	5/19/22	CLIENT REVISIONS

Licensor:
COLORADO LICENSED
TIM ALEXANDER
44563
EXP 10/31/2023
PROFESSIONAL ENGINEER
SIGNED, 19 MAY 2022

Issued For:
5/19/22
PRELIMINARY CD'S

SHEET TITLE:
OVERALL SITE PLAN

SHEET NUMBER:
A-1

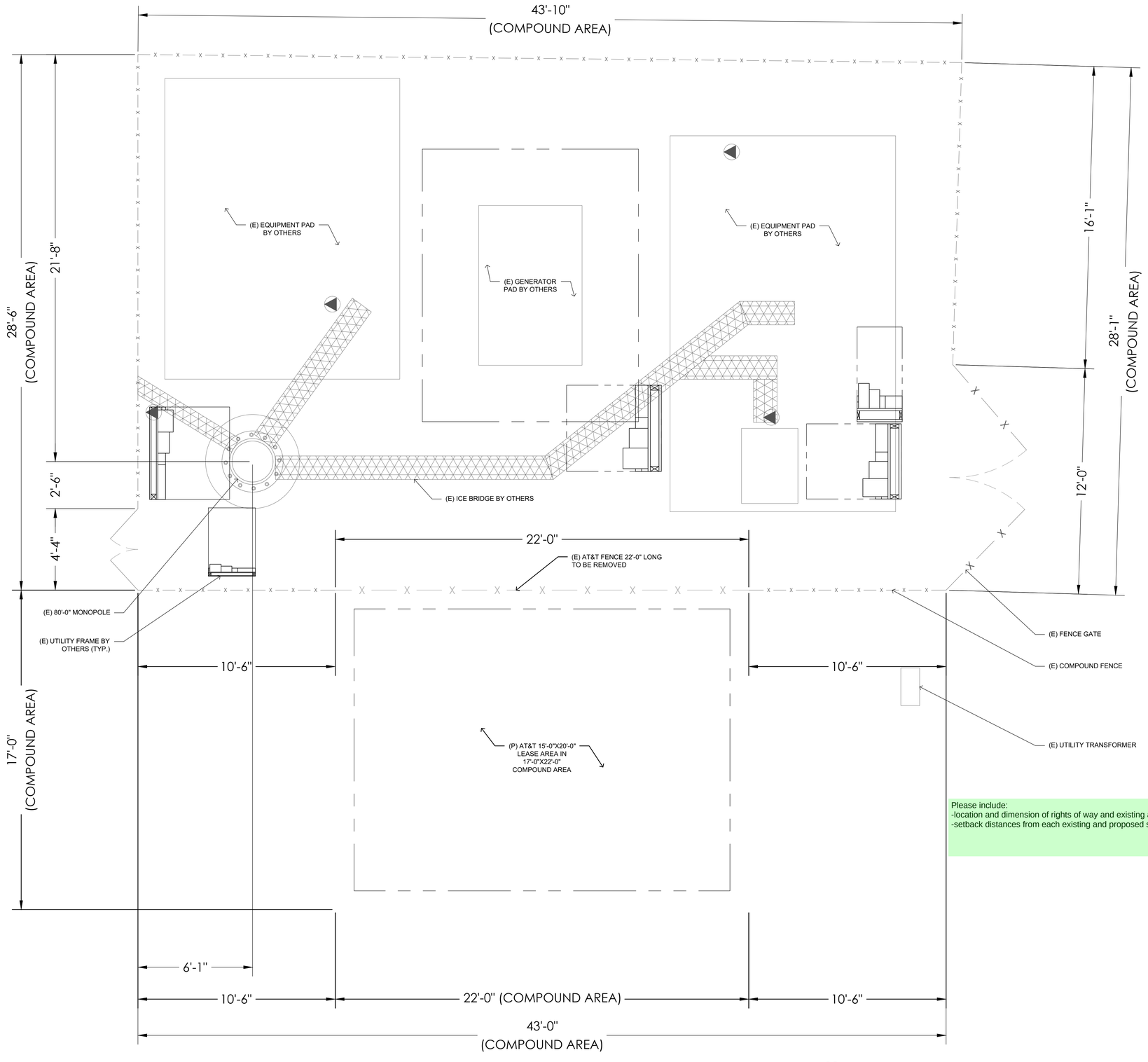

1 EXISTING COMPOUND PLAN

SCALE: 2' 1' 0 2' 3/8"=1'-0" (FULL SIZE) 3/16"=1'-0" (11x17)

N

SITE TYPE: MONOPOLE/WIC

Please include:
-location and dimension of rights of way and existing and proposed easements
-setback distances from each existing and proposed structure to the property lines

AT&T Site ID:
COL02568
6915 SPACE VILLAGE AVENUE
COLORADO SPRINGS, CO 80915

Tower Owner:
CROWN CASTLE
2055 SOUTH STEARMAN DRIVE
CHANDLER, AZ 85286

PREPARED FOR:
at&t Mobility
161 Inverness Drive West 2nd floor
Englewood, Colorado 80112

A&E:
TELCYTE INFRASTRUCTURE SERVICES
3450 N HIGLEY RD - SUITE 102,
MESA, AZ 85215

AT&T SITE NO:	COL02568
BU NO:	823722
DRAWN BY:	AK
CHECKED BY:	CM

REV	DATE	DESCRIPTION
A	2/25/22	PRELIMINARY CD'S
B	03/21/22	CLIENT REVISIONS
C	5/19/22	CLIENT REVISIONS

Licensor:
COLORADO LICENSED
TIM ALEXANDER
44563
EXP
10/31/2023
PROFESSIONAL ENGINEER
SIGNED, 19 MAY 2022

Issued For:
5/19/22
PRELIMINARY CD'S

SHEET TITLE:
EXISTING COMPOUND PLAN

SHEET NUMBER:
A-2

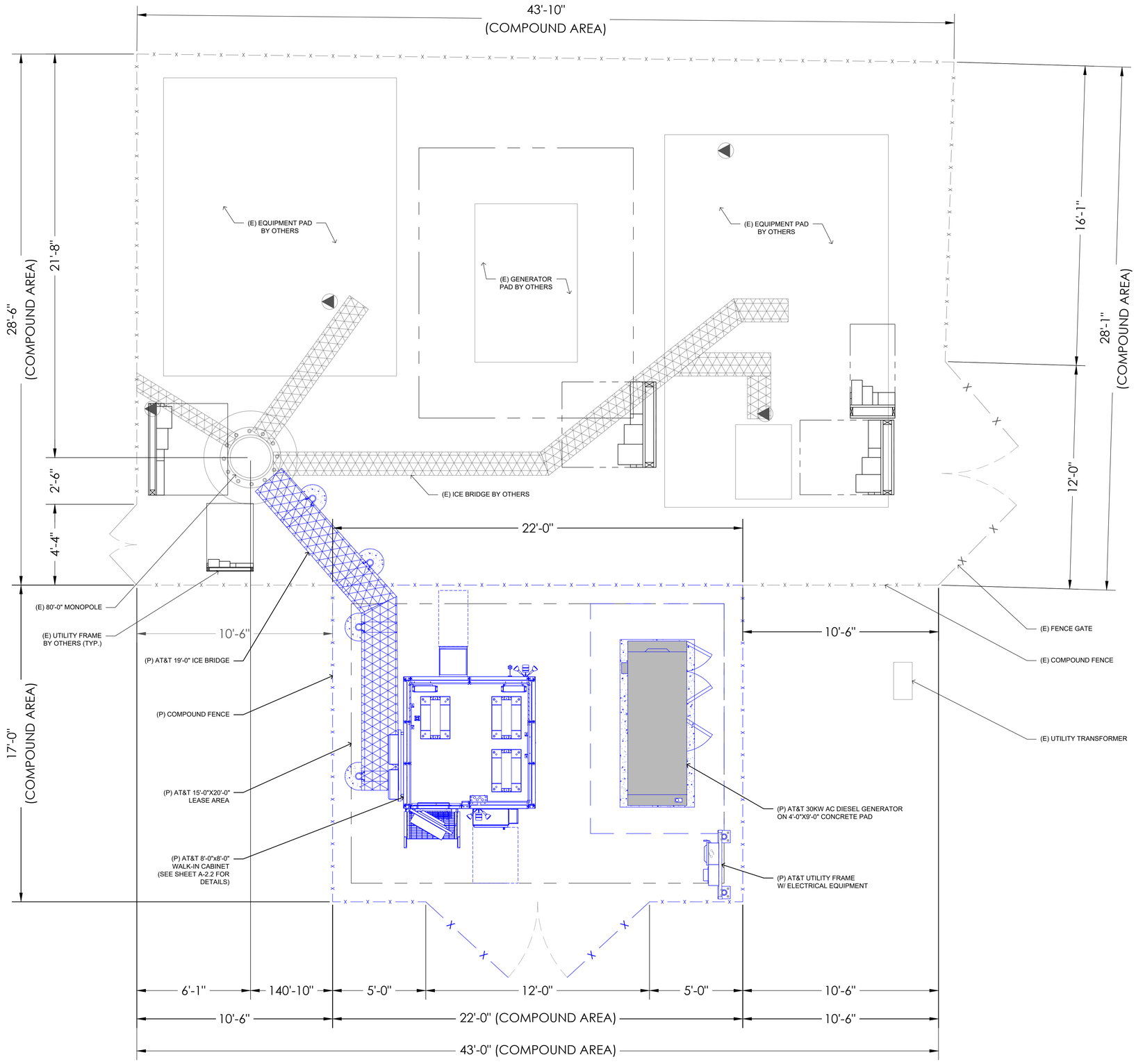

1 PROPOSED COMPOUND PLAN

SCALE: 2 1 0 2' 3/8"=1'-0" (FULL SIZE) 3/16"=1'-0" (11x17)

N

SITE TYPE: MONOPOLE/WIC

AT&T Site ID:
COL02568
6915 SPACE VILLAGE AVENUE
COLORADO SPRINGS, CO 80915

Tower Owner:
CROWN CASTLE
2055 SOUTH STEARMAN DRIVE
CHANDLER, AZ 85286

PREPARED FOR:
at&t Mobility
161 Inverness Drive West 2nd floor
Englewood, Colorado 80112

A&E:
TELCYTE INFRASTRUCTURE SERVICES
3450 N HIGLEY RD - SUITE 102,
MESA, AZ 85215

AT&T SITE NO:	COL02568
BU NO:	823722
DRAWN BY:	AK
CHECKED BY:	CM

REV	DATE	DESCRIPTION
A	2/25/22	PRELIMINARY CD'S
B	03/21/22	CLIENT REVISIONS
C	5/19/22	CLIENT REVISIONS

Licensor:
COLORADO LICENSED
TIM ALEXANDER
44563
EXP
10/31/2023
PROFESSIONAL ENGINEER
SIGNED, 19 MAY 2022

Issued For:
5/19/22
PRELIMINARY CD'S

SHEET TITLE:
PROPOSED COMPOUND PLAN

SHEET NUMBER:
A-2.1

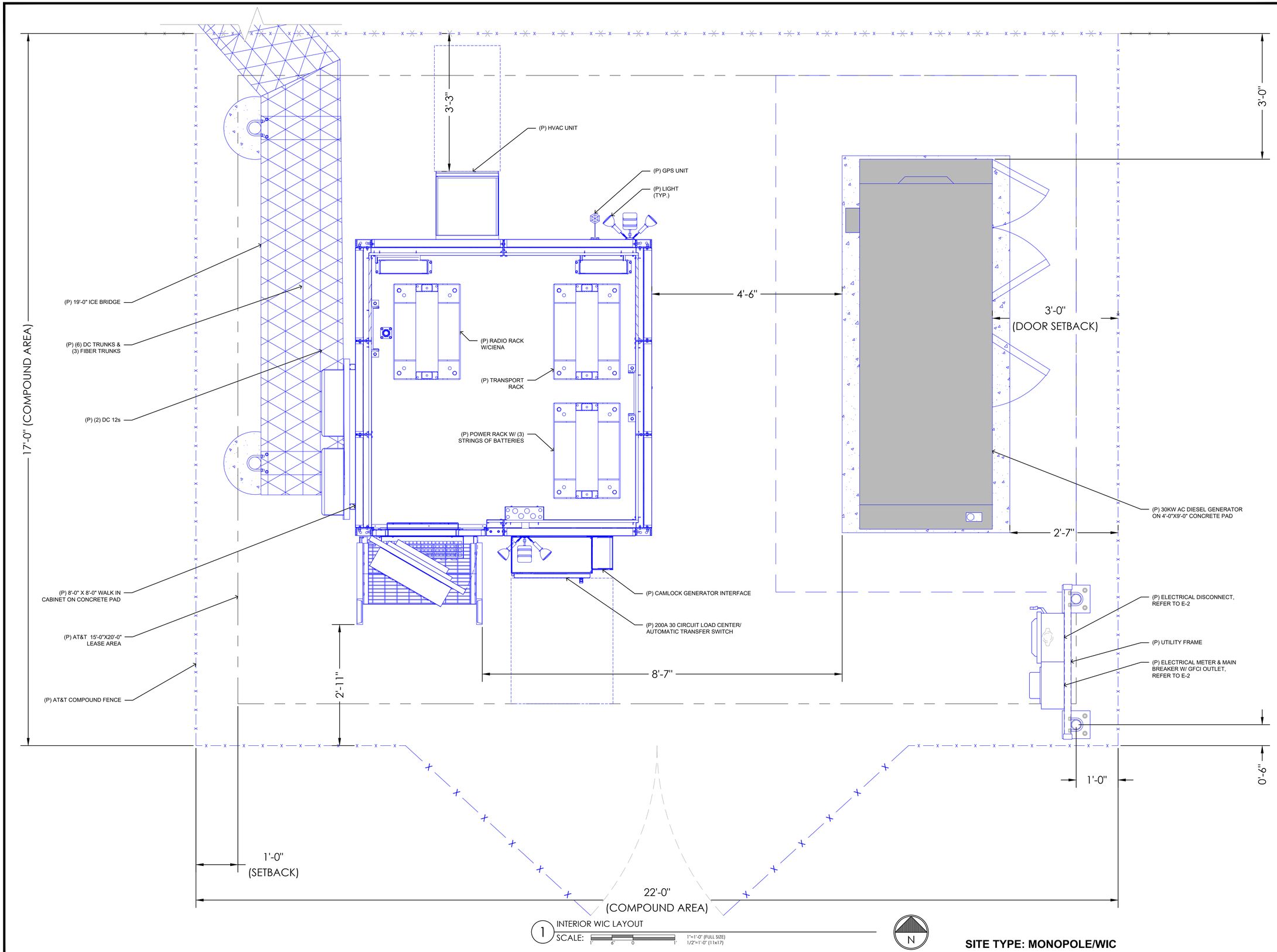

1 INTERIOR WIC LAYOUT
SCALE: 1"=1'-0" (FULL SIZE) 1/2"=1'-0" (11x17)

SITE TYPE: MONOPOLE/WIC

AT&T Site ID:
COL02568
6915 SPACE VILLAGE AVENUE
COLORADO SPRINGS, CO 80915

Tower Owner:
CROWN CASTLE
2055 SOUTH STEARMAN DRIVE
CHANDLER, AZ 85286

PREPARED FOR:
at&t Mobility
161 Inverness Drive West 2nd floor
Englewood, Colorado 80112

A&E:
TELCYTE INFRASTRUCTURE SERVICES
3450 N HIGLEY RD - SUITE 102,
MESA, AZ 85215

AT&T SITE NO:	COL02568
BU NO:	823722
DRAWN BY:	AK
CHECKED BY:	CM

REV	DATE	DESCRIPTION
A	2/25/22	PRELIMINARY CD'S
B	03/21/22	CLIENT REVISIONS
C	5/19/22	CLIENT REVISIONS

Licensor:
COLORADO LICENSED
TIM ALEXANDER
44563
EXP 10/31/2023
PROFESSIONAL ENGINEER
SIGNED, 19 MAY 2022

Issued For:
5/19/22
PRELIMINARY CD'S

SHEET TITLE:
INTERIOR WIC LAYOUT

SHEET NUMBER:
A-2.2

LENGTH:	96.0"
WIDTH:	19.6"
DEPTH:	7.8"
WEIGHT:	102.1 lbs.

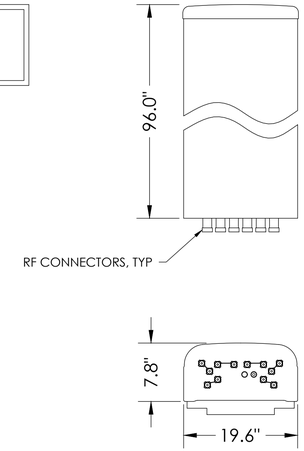

4 COMMSCOPE - NNH4-65C-R6-V3
SCALE: NOT TO SCALE

NEW ANTENNA SCHEDULE

SECTOR	POSITION	TECH	ANTENNA	RRH	AZIMUTH	RAD CENTER	ANTENNA DIMS (HxWxD)
ALPHA	1	5G 850/LTE WCS	COMMSCOPE - NNH4-65C-R6-V3	AIRSCALE RRH 4T4R B5 160W AHCA AIRSCALE RRH 4T4R B30 100W AHNA	25º	105'-0"	96.0"x19.6"x7.8"
ALPHA	2	-	-	-	-	-	-
ALPHA	3	-	-	-	-	-	-
ALPHA	4	LTE 700/1900/AWS	COMMSCOPE - NNH4-65C-R6-V3	AIRSCALE TRI RRH 4T4R B12/14/29 370W AHLBBA AIRSCALE DUAL RRH 4T4R B25/66 320W AHFIB	25º	105'-0"	96.0"x19.6"x7.8"
BETA	1	5G 850/LTE WCS	COMMSCOPE - NNH4-65C-R6-V3	AIRSCALE RRH 4T4R B5 160W AHCA AIRSCALE RRH 4T4R B30 100W AHNA	170º	105'-0"	96.0"x19.6"x7.8"
BETA	2	-	-	-	-	-	-
BETA	3	-	-	-	-	-	-
BETA	4	LTE 700/1900/AWS	COMMSCOPE - NNH4-65C-R6-V3	AIRSCALE TRI RRH 4T4R B12/14/29 370W AHLBBA AIRSCALE DUAL RRH 4T4R B25/66 320W AHFIB	170º	105'-0"	96.0"x19.6"x7.8"
GAMMA	1	5G 850/LTE WCS	COMMSCOPE - NNH4-65C-R6-V3	AIRSCALE RRH 4T4R B5 160W AHCA AIRSCALE RRH 4T4R B30 100W AHNA	280º	105'-0"	96.0"x19.6"x7.8"
GAMMA	2	-	-	-	-	-	-
GAMMA	3	-	-	-	-	-	-
GAMMA	4	LTE 700/1900/AWS	COMMSCOPE - NNH4-65C-R6-V3	AIRSCALE TRI RRH 4T4R B12/14/29 370W AHLBBA AIRSCALE DUAL RRH 4T4R B25/66 320W AHFIB	280º	105'-0"	96.0"x19.6"x7.8"

NOTE: CONFIRM THAT GENERAL CONTRACTOR IS USING LATEST VERSION OF RFDS.
*OR SIMILAR

2 RF SCHEDULE
SCALE: NOT TO SCALE

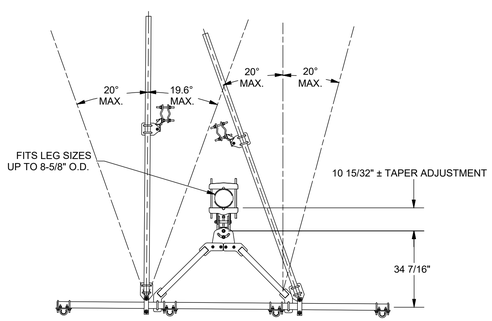

ANGLE CALIBRATING PROCEDURE:

1. MEASURE TOWER TAPER AND PICK LOWER BRACKET HOLE:
   HOLE A = -2.6° TO 2.6°
   HOLE B = 1.6° TO 6.8°
2. USE CALIBRATING BOLT TO ADJUST FRAME TO DESIRED TAPER
3. TORQUE LOCKING BOLTS TO 100 ft.-lbs.
4. ADVANCE LOCKING NUT TO POSITIONING PLATE, THEN TIGHTEN.

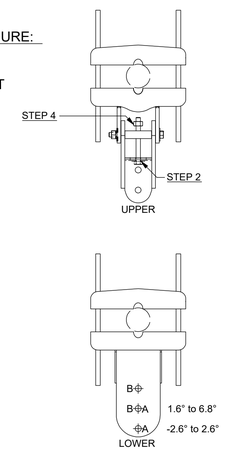

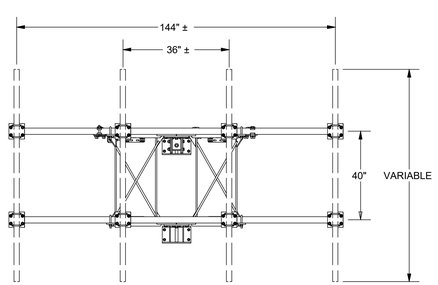

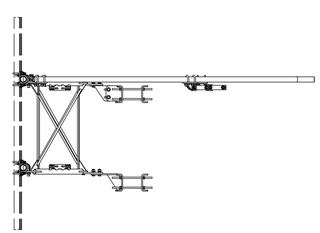

3 SITEPRO1 VFA12-HD-WLL-30120 HEAVY WLL ANTENNA FRAME DETAIL - ANT# 15997
SCALE: NOT TO SCALE

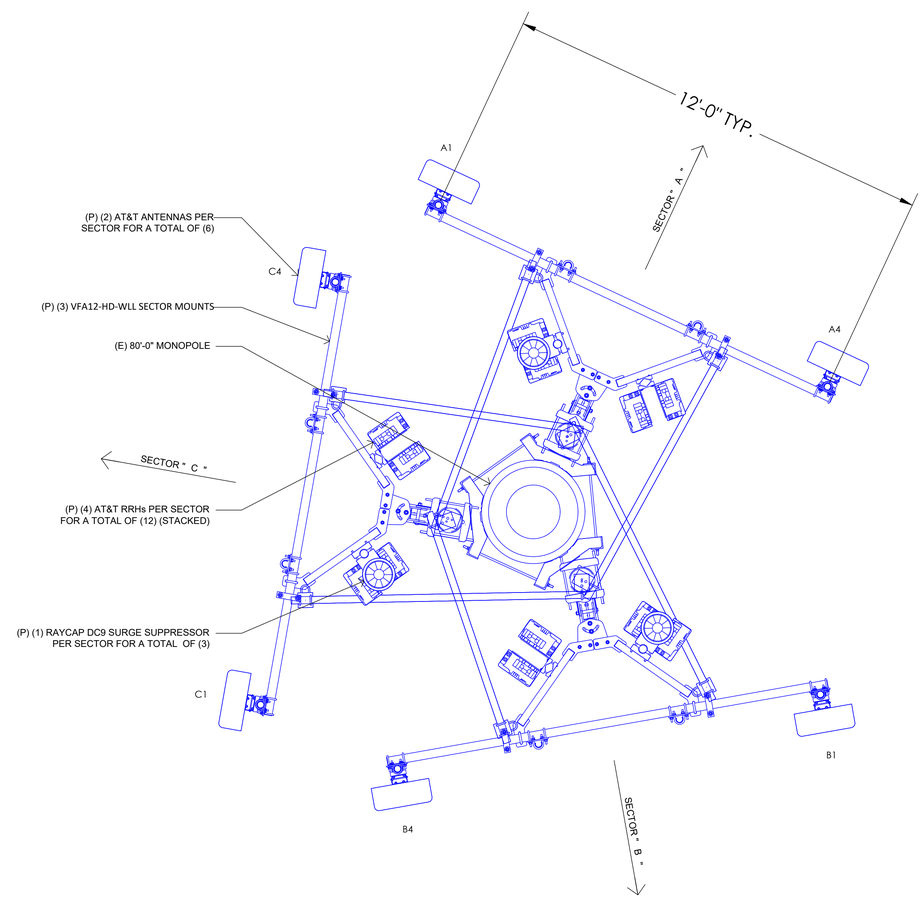

1 ANTENNA PLAN
SCALE: 2' 1' 0 2' 1/2"=1'-0" (FULL SIZE) 1/4"=1'-0" (11x17)

N

SITE TYPE: MONOPOLE/WIC

AT&T Site ID:
COL02568
6915 SPACE VILLAGE AVENUE
COLORADO SPRINGS, CO 80915

Tower Owner:
CROWN CASTLE
2055 SOUTH STEARMAN DRIVE
CHANDLER, AZ 85286

PREPARED FOR:
at&t Mobility
161 Inverness Drive West 2nd floor
Englewood, Colorado 80112

A&E:
TELCYTE INFRASTRUCTURE SERVICES
3450 N HIGLEY RD - SUITE 102,
MESA, AZ 85215

AT&T SITE NO:	COL02568
BU NO:	823722
DRAWN BY:	AK
CHECKED BY:	CM

REV	DATE	DESCRIPTION
A	2/25/22	PRELIMINARY CD'S
B	03/21/22	CLIENT REVISIONS
C	5/19/22	CLIENT REVISIONS

Licensor:
COLORADO LICENSED
TIM ALEXANDER
44563
EXP 10/31/2023
PROFESSIONAL ENGINEER
SIGNED, 19 MAY 2022

Issued For:
5/19/22
PRELIMINARY CD'S

SHEET TITLE:
ANTENNA PLAN & DETAILS

SHEET NUMBER:
A-3

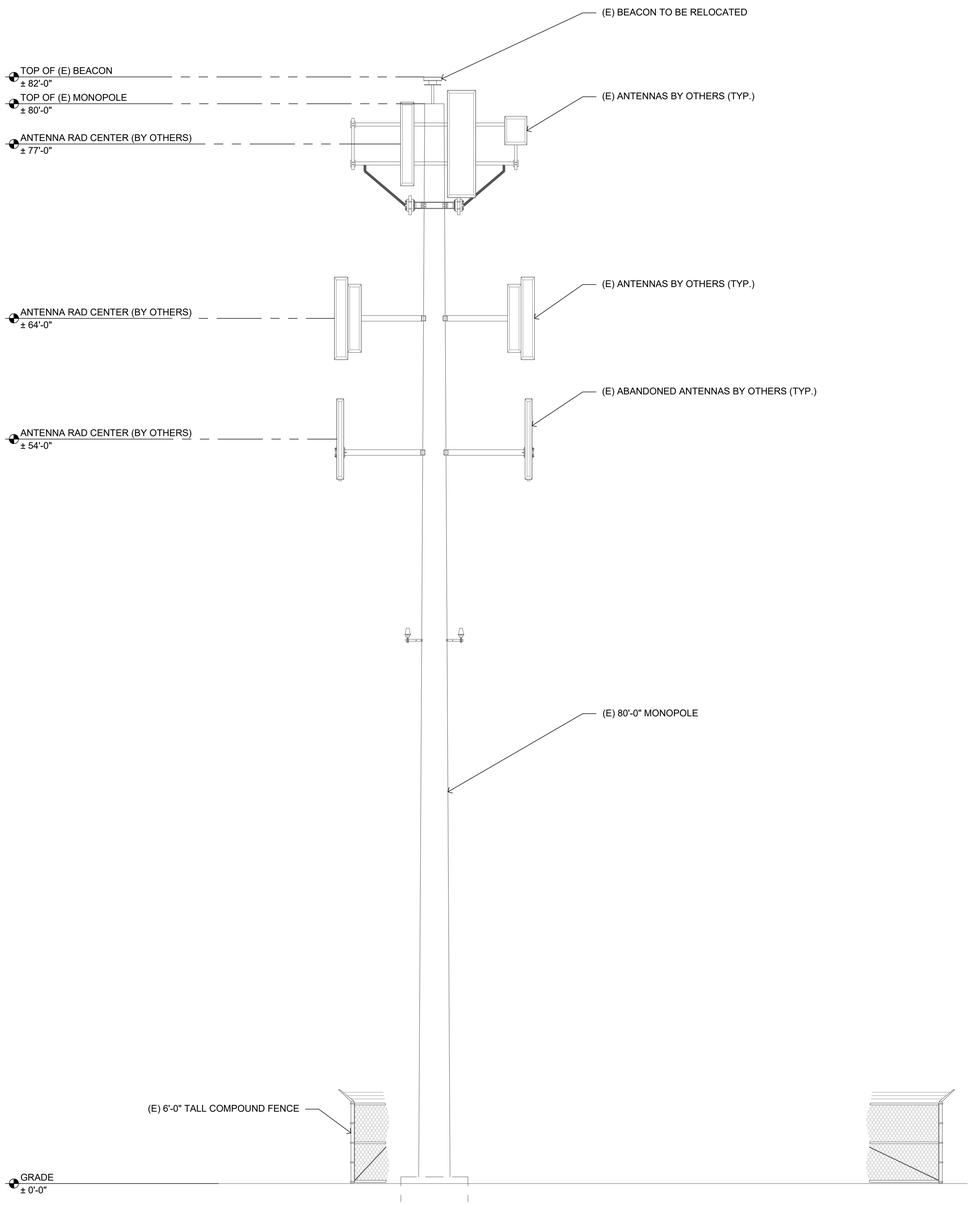

2 EXISTING SOUTH ELEVATION

SCALE: 4' 2' 0 4' 3/16"=1'-0" (FULL SIZE) 3/32"=1'-0" (11x17)

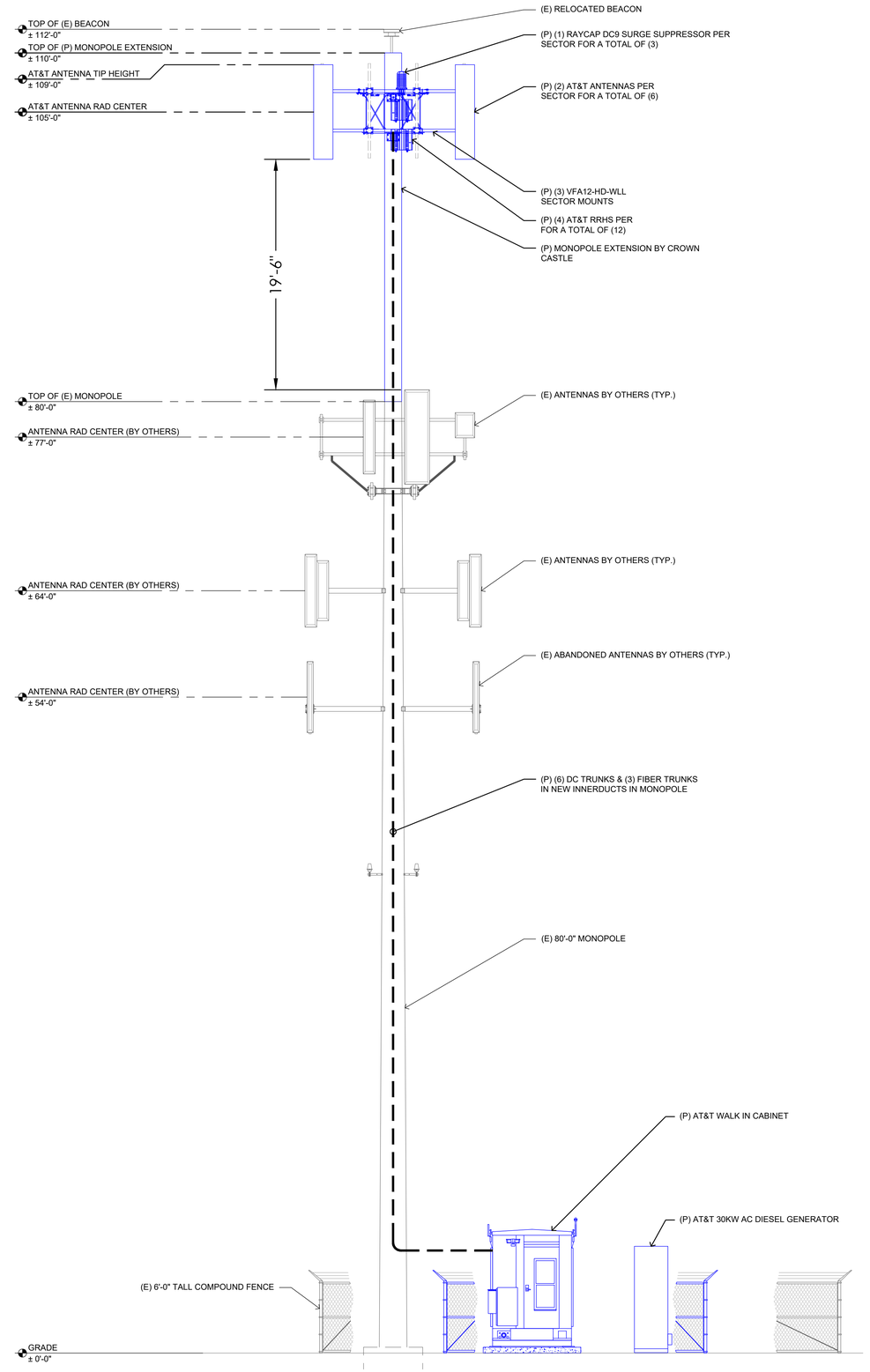

1 PROPOSED SOUTH ELEVATION

SCALE: 4' 2' 0 4' 3/16"=1'-0" (FULL SIZE) 3/32"=1'-0" (11x17)

SITE TYPE: MONOPOLE/WIC

AT&T Site ID:
COL02568
6915 SPACE VILLAGE AVENUE
COLORADO SPRINGS, CO 80915

Tower Owner:
CROWN CASTLE
2055 SOUTH STEARMAN DRIVE
CHANDLER, AZ 85286

PREPARED FOR:
at&t Mobility
161 Inverness Drive West 2nd floor
Englewood, Colorado 80112

A&E:
TELCYTE INFRASTRUCTURE SERVICES
3450 N HIGLEY RD - SUITE 102,
MESA, AZ 85215

AT&T SITE NO:	COL02568
BU NO:	823722
DRAWN BY:	AK
CHECKED BY:	CM

REV	DATE	DESCRIPTION
A	2/25/22	PRELIMINARY CD'S
B	03/21/22	CLIENT REVISIONS
C	5/19/22	CLIENT REVISIONS

Licensor:
COLORADO LICENSED
TIM ALEXANDER
44563
EXP
10/31/2023
PROFESSIONAL ENGINEER
SIGNED, 19 MAY 2022

Issued For:
5/19/22
PRELIMINARY CD'S

SHEET TITLE:
PROPOSED MONOPOLE - SOUTH ELEVATION

SHEET NUMBER:
A-4.1

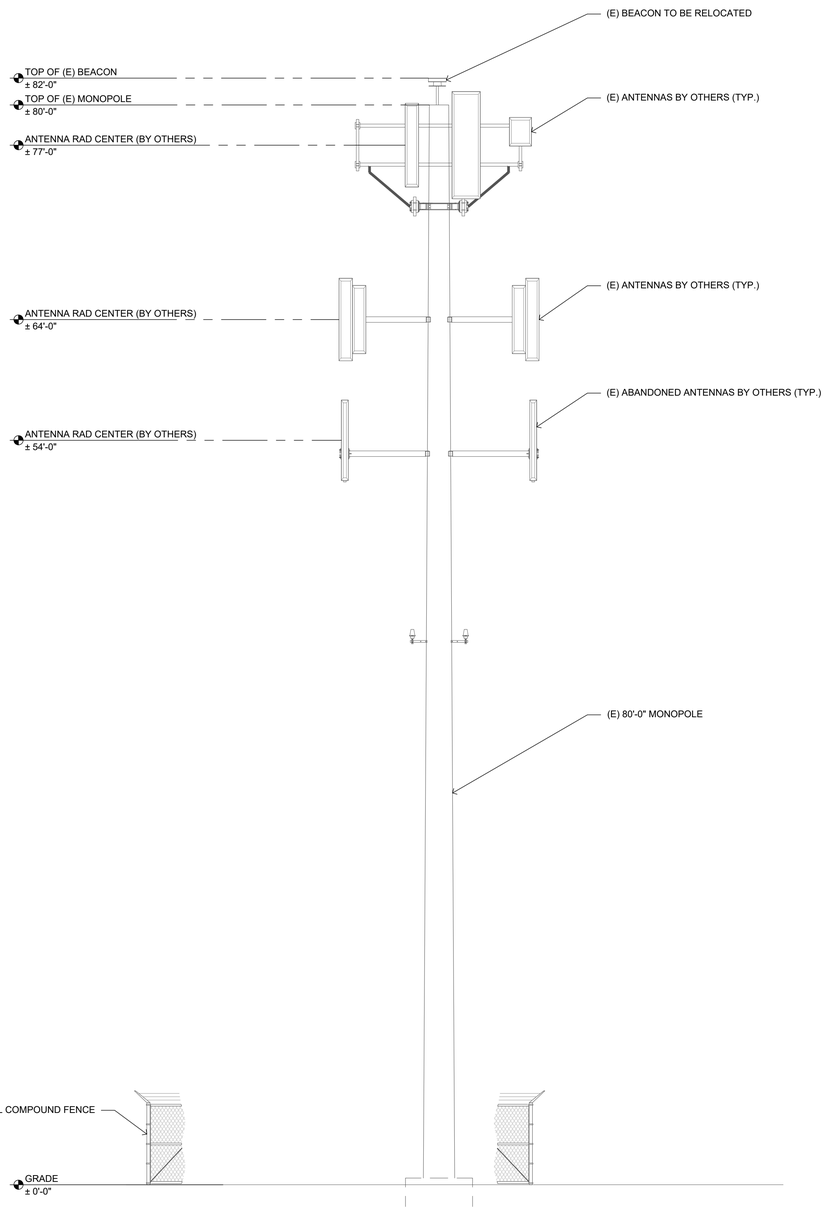

2 EXISTING WEST ELEVATION
SCALE: 4' 2' 0 4' 3/16"=1'-0" (FULL SIZE) 3/32"=1'-0" (11x17)

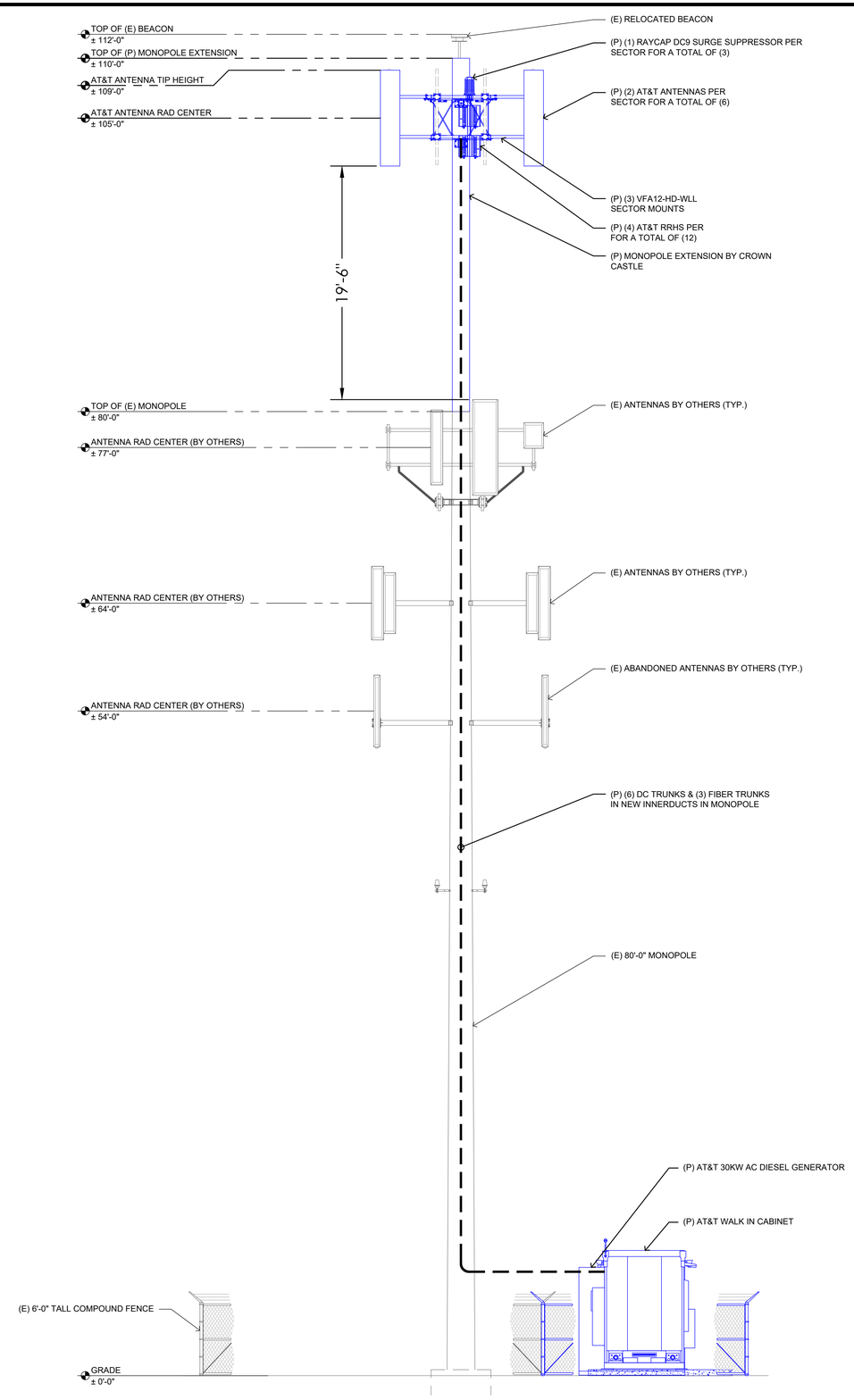

1 PROPOSED WEST ELEVATION
SCALE: 4' 2' 0 4' 3/16"=1'-0" (FULL SIZE) 3/32"=1'-0" (11x17)

SITE TYPE: MONOPOLE/WIC

AT&T Site ID:
COL02568
6915 SPACE VILLAGE AVENUE
COLORADO SPRINGS, CO 80915

Tower Owner:
CROWN CASTLE
2055 SOUTH STEARMAN DRIVE
CHANDLER, AZ 85286

PREPARED FOR:
at&t Mobility
161 Inverness Drive West 2nd floor
Englewood, Colorado 80112

A&E:
TELCYTE INFRASTRUCTURE SERVICES
3450 N HIGLEY RD - SUITE 102,
MESA, AZ 85215

AT&T SITE NO:	COL02568
BU NO:	823722
DRAWN BY:	AK
CHECKED BY:	CM

REV	DATE	DESCRIPTION
A	2/25/22	PRELIMINARY CD'S
B	03/21/22	CLIENT REVISIONS
C	5/19/22	CLIENT REVISIONS

Licensor:
COLORADO LICENSED
TIM ALEXANDER
44563
EXP 10/31/2023
PROFESSIONAL ENGINEER
SIGNED, 19 MAY 2022

Issued For:
5/19/22
PRELIMINARY CD'S

SHEET TITLE:
PROPOSED MONOPOLE - WEST ELEVATION

SHEET NUMBER:
A-4.2

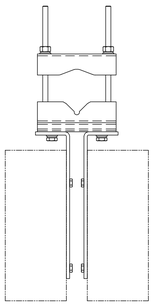

PLAN VIEW

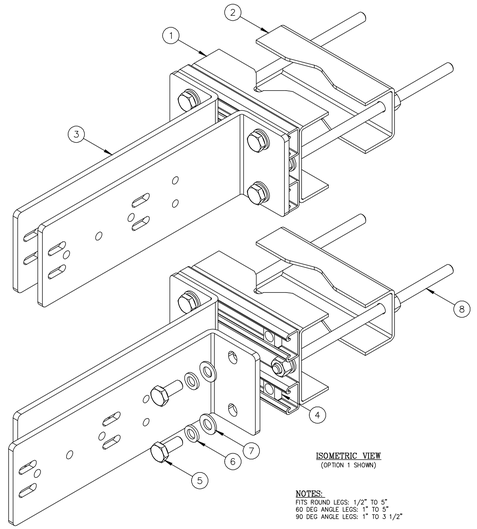

ISOMETRIC VIEW
(OPTION 1 SHOWN)

NOTES:
FITS ROUND LEGS: 1/2" TO 5"
60 DEG ANGLE LEGS: 1" TO 5"
90 DEG ANGLE LEGS: 1" TO 3 1/2"

C10123105 UNIVERSAL RRU MOUNT

ITEM	QTY.	PART NO.	DESCRIPTION	WEIGHT
1.	2	CW01192	WELDMENT, FRONT CLAMP	9
2.	2	CS03080	BACK CLAMP	5
3.	4	CS03079	ANGLE, RRU MOUNT	29
4.	8	C40998382	G-STRUT SPRING NUT GN-812 1/2"-13 OR EQUAL	1
5.	8	C40112028	BOLT, 1/2 ø X 1 1/4 S.S.	1
6.	8	C40018003	1/2 ø LOCK WASHER S.S.	1
7.	8	C40020012	1/2 ø FLAT WASHER S.S.	1
8.	4	C40032007	THREADED ROD ASSEMBLY, 1/2 ø X 12 HDG	5
			TOTAL WEIGHT	52

7 DUAL MOUNTING BRACKET
NOT TO SCALE

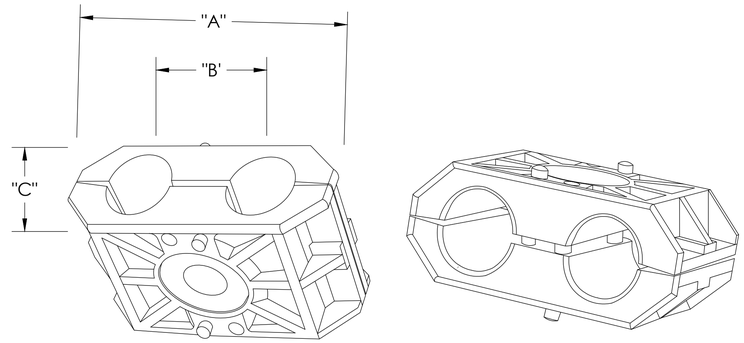

PART #	CABLE SIZE & TYPE	U of M	Weight/ 10 pk	A	B	C
CXB4	Fiber Kit (4-6mm)	10 PACK	1.3 lb	2-1/2"	1-1/4"	1"
CXB14-2	1/4" Cable (6-8mm)	10 PACK	0.20 lb	1-1/4"	3/4"	5/8"
CXB38	3/8" Cables & LMR400 (10-12 mm)	10 PACK	0.30 lb	1-5/8"	1"	7/8"
CXB12	1/2" Corrugated (15.5-17.5 mm)	10 PACK	0.60 lb	2-1/4"	1-1/4"	1"
CXB78	7/8" Corrugated (27-29 mm)	10 PACK	1.0 lb	3"	2"	1-1/4"
CXB114	1-1/4" Corrugated (39-42 mm)	10 PACK	1.6 lb	4-1/8"	2-1/2"	1-7/8"
CXB158	1-5/8" Corrugated (50-54 mm)	10 PACK	2.5 lb	5"	2-3/4"	2-1/2"
CXB214	2-1/4" Corrugated (60-65 mm)	10 PACK	3.0 lb	6"	3-1/8"	2-3/4"

6 JUMPER ATTACHMENT/CABLE BLOCK DETAIL
NOT TO SCALE

MANUFACTURER: NOKIA
MODEL: AIRSCALE RRH 4T4R B30 100W
HEIGHT: 16.83" (427mm)
WIDTH: 12.76" (326mm)
DEPTH: 7.22" (173mm)
WEIGHT: 39.02 LBS (17.7KG)

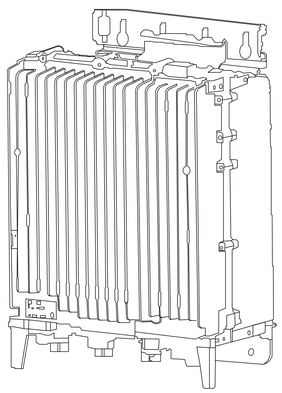

5 RRH DETAIL
NOT TO SCALE

MANUFACTURER: NOKIA
MODEL: AIRSCALE RRH 4T4R B25/B66 320W
HEIGHT: 22.0" (560mm)
WIDTH: 12.1" (308mm)
DEPTH: 5.9" (149mm)
WEIGHT: 66.1 LBS (30.0KG)

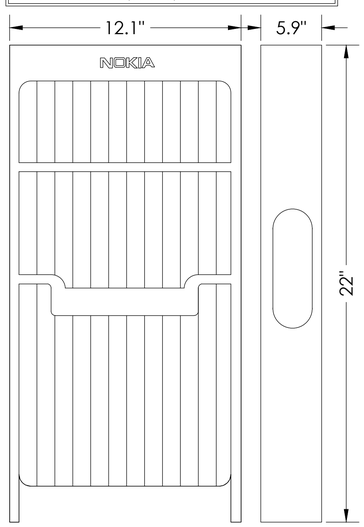

4 RRH DETAIL
NOT TO SCALE

MANUFACTURER: NOKIA
MODEL: AIRSCALE RRH 4T4R B5 160W
HEIGHT: 13.3" (337mm)
WIDTH: 11.6" (295mm)
DEPTH: 6.5" (165mm)
WEIGHT: 36.8 LBS (16.7KG)

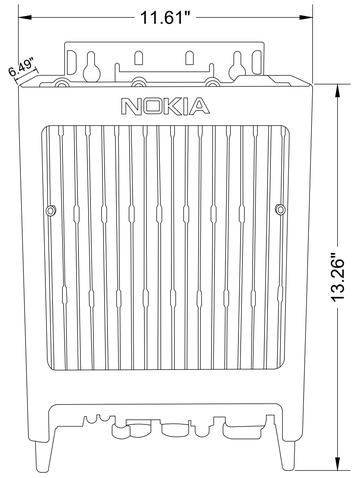

3 RRH DETAIL
NOT TO SCALE

MANUFACTURER: NOKIA
MODEL: AIRSCALE RRH 4T4R B12/14/29
370W AHLBBA
HEIGHT: 24.7" (609mm)
WIDTH: 14.8" (357mm)
DEPTH: 8.3" (198mm)
WEIGHT: 101.4 LBS (46KG) W/MOUNTING

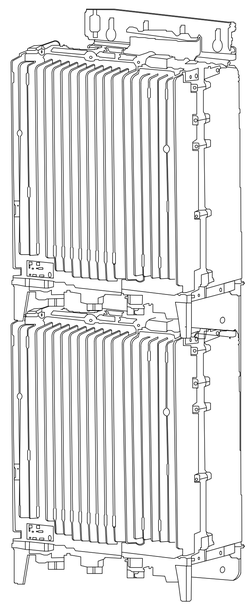

2 RRH DETAIL
NOT TO SCALE

MANUF: RAYCAP
DESC: SURGE PROTECTOR "SQUID" (OR SIMILAR)
MODEL: DC9-48-60-24-8C-EV
WEIGHT: 26.2 LBS

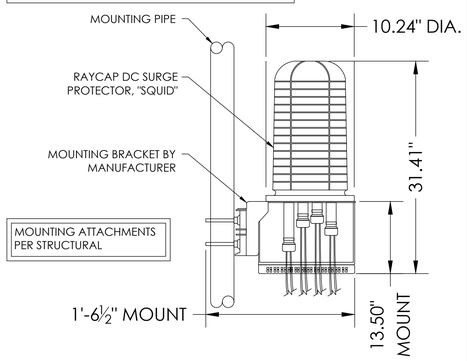

1 SURGE SUPPRESSOR DETAIL
NOT TO SCALE

SITE TYPE: MONOPOLE/WIC

AT&T Site ID:
COL02568
6915 SPACE VILLAGE AVENUE
COLORADO SPRINGS, CO 80915

Tower Owner:
CROWN CASTLE
2055 SOUTH STEARMAN DRIVE
CHANDLER, AZ 85286

PREPARED FOR:
at&t Mobility
161 Inverness Drive West 2nd floor
Englewood, Colorado 80112

A&E:
TELCYTE INFRASTRUCTURE SERVICES
3450 N HIGLEY RD - SUITE 102,
MESA, AZ 85215

AT&T SITE NO:	COL02568
BU NO:	823722
DRAWN BY:	AK
CHECKED BY:	CM

REV	DATE	DESCRIPTION
A	2/25/22	PRELIMINARY CD'S
B	03/21/22	CLIENT REVISIONS
C	5/19/22	CLIENT REVISIONS

Licensor:
COLORADO LICENSED
TIM ALEXANDER
44563
EXP 10/31/2023
PROFESSIONAL ENGINEER
SIGNED, 19 MAY 2022

IT IS A VIOLATION OF LAW FOR ANY PERSON, UNLESS THEY ARE ACTING UNDER THE DIRECTION OF A LICENSED PROFESSIONAL ENGINEER, TO ALTER THIS DOCUMENT.

Issued For:
5/19/22
PRELIMINARY CD'S

SHEET TITLE:
DETAILS

SHEET NUMBER:
A-5

PARTS LIST						
ITEM	QTY	PART NO.	PART DESCRIPTION	LENGTH	UNIT WT.	NET WT.
1	2	P3160	3-1/2" X 160" SCH 40 GALVANIZED PIPE	160 in	101.25	202.50
2	2	PC312	3-1/2" FENCE POST CAP		0.59	1.17
3	10	UNT10	UNISTRUT		20.38	203.79
4	20	X-UB3312	3/8" X 3-1/2" X 4-3/4" X 2" U-BOLT (HDG.)		0.73	14.63
5	40	G38FW	3/8" HDG USS FLATWASHER		0.01	0.47
6	40	G38LW	3/8" HDG LOCKWASHER		0.01	0.27
7	40	G38NUT	3/8" HDG HEAVY 2H HEX NUT		0.03	1.35
8	20	UNICAP	UNISTRUT END CAP		0.03	0.64
					TOTAL WT. #	417.77

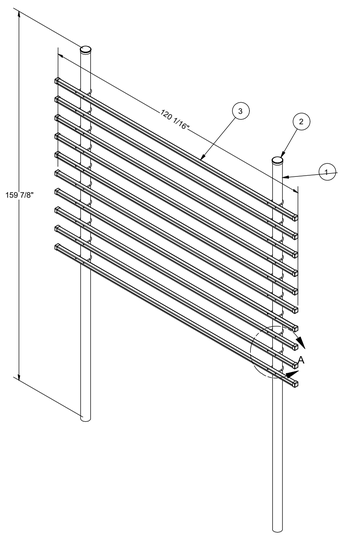

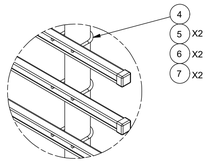

DETAIL A

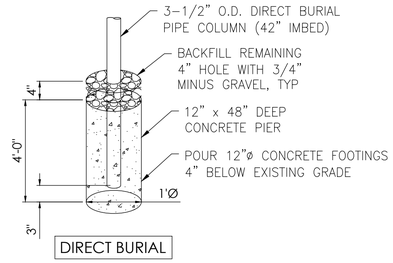

DIRECT BURIAL

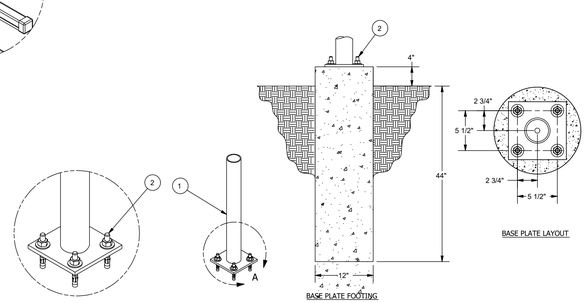

DETAIL A

BASE PLATE FOOTING

BASE PLATE LAYOUT

PARTS LIST					
ITEM	QTY	PART NO.	PART DESCRIPTION	UNIT WT.	NET WT.
1	1	X-SP126	BASE SHOE PLATE PIPE COLUMN	89.00	89.00
2	4	SWA585	5/8" X 5" STAINLESS WEDGE ANCHOR	0.64	2.55
				TOTAL WT. #	91.55

BASE SHOE

5 SITEPRO1 - ER105D H-FRAME DETAIL
NOT TO SCALE

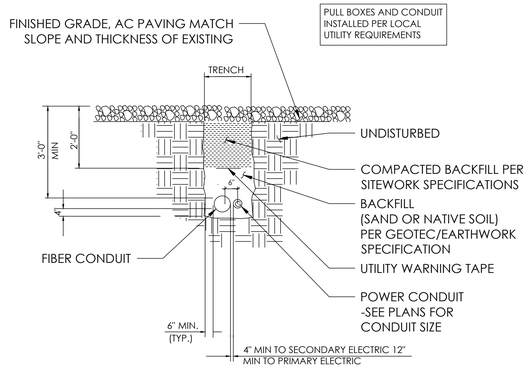

4 CONDUIT TRENCHING DETAIL
NOT TO SCALE

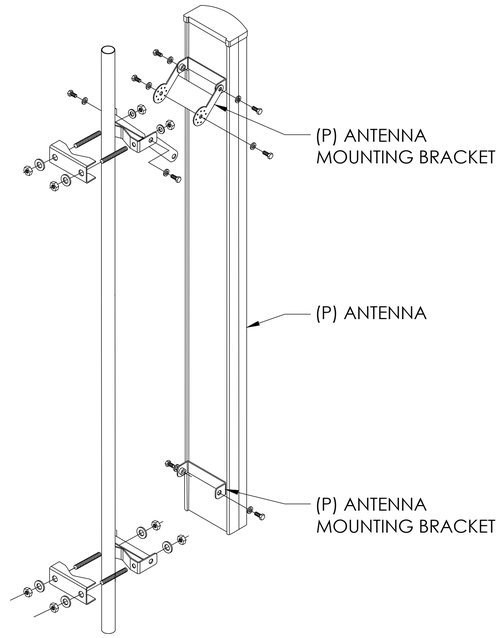

3 ANTENNA MOUNTING DETAILS
NOT TO SCALE

Parts List			
ITEM	QTY	PART NUMBER	DESCRIPTION
16	4	80-4941-00	LIFTING EYE
21	100	55-8002-06	Washer Flat SS 3/8
94	4	55-9044-00	ANCHOR SHACKLE
113	4	55-2008-06	7/8-14 ZN NYLOCK
114	4	55-5001-14	7/8-14 X 5.00 HHCS
296	4	80-7072-00	GPS MOUNT
297	4	55-6025-06	3/8-16 X 4.5 SS HHCS
315	4	80-7070-00	PAINTED UNISTRUT
316	32	55-5061-00	HHCS ZN 3/8-16 X 1 1/4
318	2	80-6845-00	GPS PIPE MOUNT
319	4	U-BOLT	

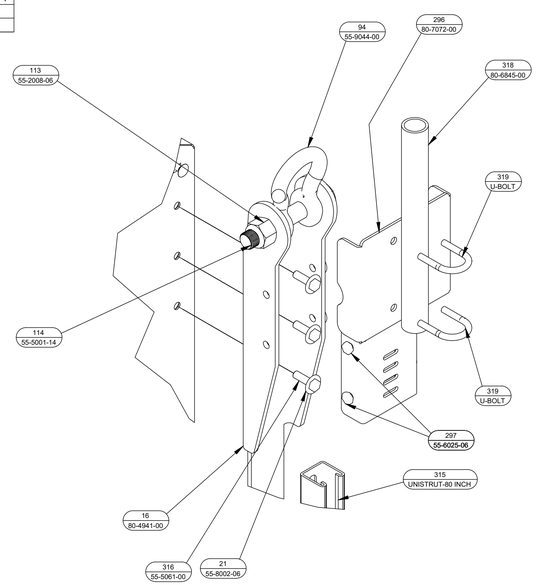

2 GPS MOUNTING DETAIL
NOT TO SCALE

ITEM	PART NO.	DESCRIPTION	QTY.	WEIGHT
1	MF-130	∅3.5" O.D. X 13'-4" DIRECT BURIAL PIPE COLUMN	2	101.38 LBS
2	WB-CY210	SAFETY GRATING 24" X 10'	1	111.00 LBS
3	WBK210BHK	HARDWARE KIT (ITEMS 4-16)	1	
4	WBLB243.08	24" WAVEGUIDE BRIDGE SUPPORT BRACKET	2	7.14 LBS
5	GUB-4356	1/2" X 3-5/8" X 6" GALV U-BOLT KIT	4	0.83 LBS
6	WBJB6	1/2" J-BOLT	4	0.41 LBS
7	GWF-04	1/2" GALV FLAT WASHER	4	0.01 LBS
8	GWL-04	1/2" GALV LOCK WASHER	4	0.01 LBS
9	GN-04	1/2" GALV HEX NUT	4	0.04 LBS
10	WBT243.01	VERTICAL TRAPEZE SECTION	3	2.53 LBS
11	WBT243.02	HORIZONTAL TRAPEZE SECTION	9	2.81 LBS
12	MT-387	SQUARE WASHER, 1-1/2" X 1-5/8" W/ 7/16" HOLE	18	0.12 LBS
13	GB-03105	3/8" X 1" GALV BOLT KIT	18	0.04 LBS
14	GB-03205	3/8" X 2" GALV BOLT KIT	9	0.04 LBS
15	GWF-03	3/8" GALV FLAT WASHER	9	0.01 LBS
16	PC-034	∅3½" PIPE CAP	2	0.28 LBS

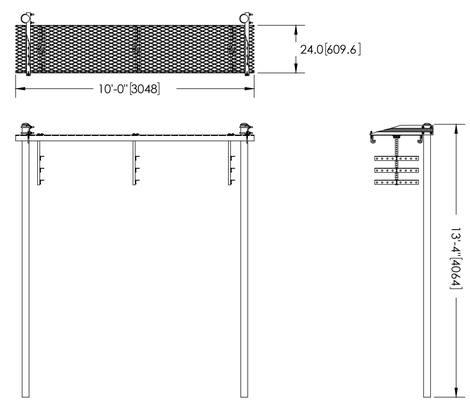

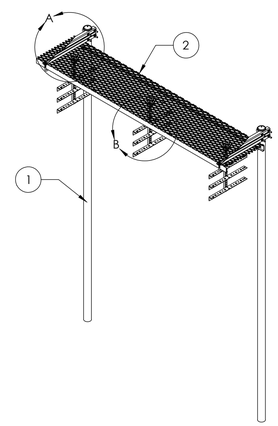

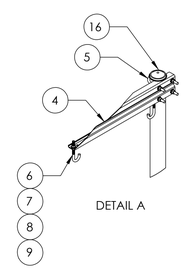

DETAIL A

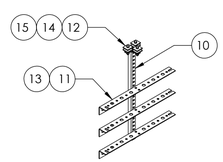

DETAIL B

NOTES:
1. ALL METRIC DIMENSIONS ARE IN BRACKETS.

1 ICE BRIDGE DETAIL
NOT TO SCALE

SITE TYPE: MONOPOLE/WIC

AT&T Site ID:
COL02568
6915 SPACE VILLAGE AVENUE
COLORADO SPRINGS, CO 80915

Tower Owner:
CROWN CASTLE
2055 SOUTH STEARMAN DRIVE
CHANDLER, AZ 85286

PREPARED FOR:
at&t Mobility
161 Inverness Drive West 2nd floor
Englewood, Colorado 80112

A&E:
TELCYTE INFRASTRUCTURE SERVICES
3450 N HIGLEY RD - SUITE 102,
MESA, AZ 85215

AT&T SITE NO:	COL02568
BU NO:	823722
DRAWN BY:	AK
CHECKED BY:	CM

REV	DATE	DESCRIPTION
A	2/25/22	PRELIMINARY CD'S
B	03/21/22	CLIENT REVISIONS
C	5/19/22	CLIENT REVISIONS

Licensor:
COLORADO LICENSED
TIM ALEXANDER
44563
EXP 10/31/2023
PROFESSIONAL ENGINEER
SIGNED, 19 MAY 2022

Issued For:
5/19/22
PRELIMINARY CD'S

SHEET TITLE:
DETAILS

SHEET NUMBER:
A-5.1

NOTES:

1. ALL DIMENSIONS OF SHELTER SHALL MATCH MANUFACTURER PROVIDED SPECIFICATIONS
2. ALL REQUIRED TIE DOWN PLATES, SHIMS, BOLTS, AND ANCHORS SHALL BE PLACED INSIDE SHELTER PRIOR TO SHIPMENT FROM MANUFACTURER
3. SLOPE GRADE AWAY FROM FOUNDATION.
4. SLAB DIMENSIONS, ORIENTATION, AND LOCATION OF STOOP TO MATCH CABINET MODEL AND DETAILS
5. GENERATOR CONCRETE PAD SHALL MATCH DETAILS AND DIMENSIONS OF THE PROVIDED GENERAC MODEL

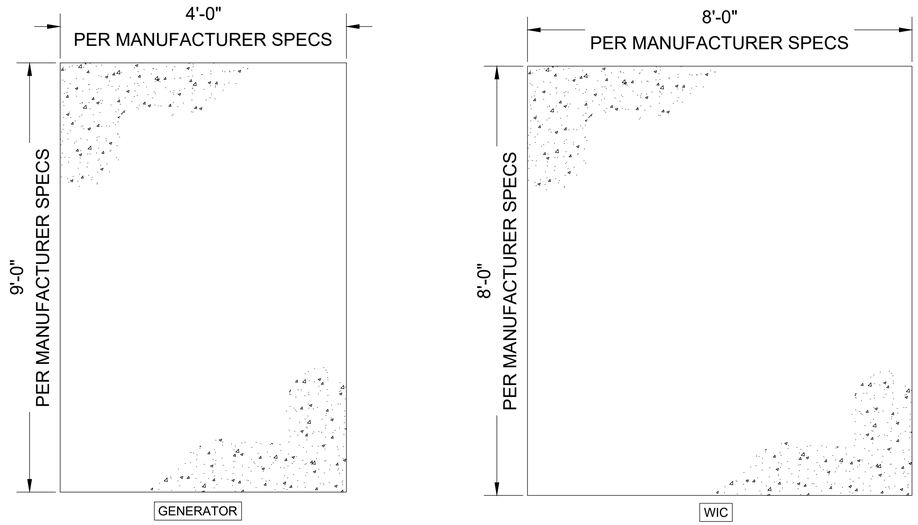

4 FOUNDATION DETAILS
NOT TO SCALE

NOTE:
1. VERIFY GENERATOR AND OR PROPANE TANK SPECS PRIOR TO CONSTRUCTION.
2. FROST DEPTH NOT CONSIDERED PER IBC 2013 SECTION 1809.5 EXCEPTION 2 (FREE STANDING BUILDINGS WITH 400 SQUARE FEET OR LESS FOR OTHER THAN LIGHT-FRAMED CONSTRUCTION)
3. INSTALL (4) HILTI HSL-3M12 ANCHOR BOLTS WITH AN EFFECTIVE EMBEDMENT DEPTH OF 3.15" (SURFACE FLATNESS MAX ¼" IN 10'-0")
4. FIELD VERIFY EXISTING CONDITIONS.

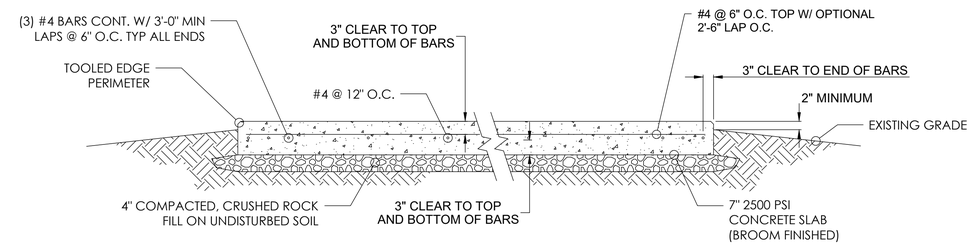

3 FOUNDATION SECTION DETAIL
NOT TO SCALE

2 NOT USED
NOT TO SCALE

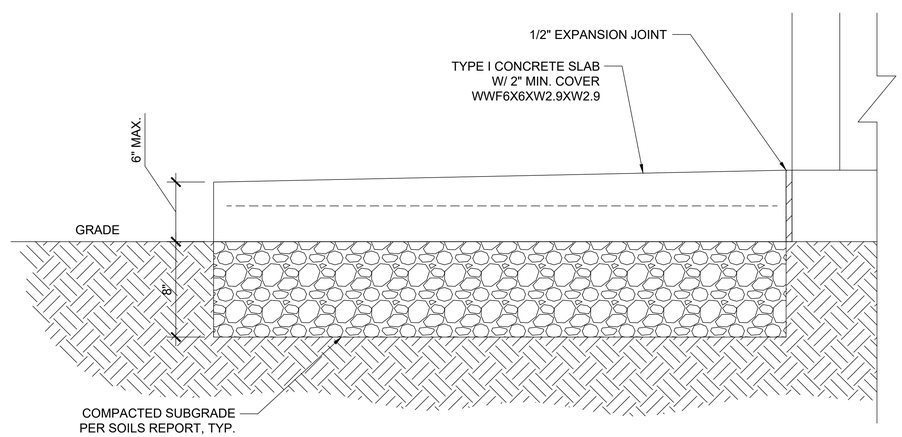

1 PROFILE VIEW OF CONCRETE STOOP
NOT TO SCALE

SITE TYPE: MONOPOLE/WIC

AT&T Site ID:
COL02568
6915 SPACE VILLAGE AVENUE
COLORADO SPRINGS, CO 80915

Tower Owner:
CROWN CASTLE
2055 SOUTH STEARMAN DRIVE
CHANDLER, AZ 85286

PREPARED FOR:
at&t Mobility
161 Inverness Drive West 2nd floor
Englewood, Colorado 80112

A&E:
TELCYTE INFRASTRUCTURE SERVICES
3450 N HIGLEY RD - SUITE 102,
MESA, AZ 85215

AT&T SITE NO:	COL02568
BU NO:	823722
DRAWN BY:	AK
CHECKED BY:	CM

REV	DATE	DESCRIPTION
A	2/25/22	PRELIMINARY CD'S
B	03/21/22	CLIENT REVISIONS
C	5/19/22	CLIENT REVISIONS

Licensor:
COLORADO LICENSED
TIM ALEXANDER
44563
EXP
10/31/2023
PROFESSIONAL ENGINEER
SIGNED, 19 MAY 2022

Issued For:
5/19/22
PRELIMINARY CD'S

SHEET TITLE:
STRUCTURAL PLAN & DETAILS

SHEET NUMBER:
S-1

Parts List			
ITEM	QTY	PART NUMBER	DESCRIPTION
1	1	50-2024-00	80x80 BASE
7	1	80-4919-00	SHELTER WALL PANEL
8	1	80-7228-00	SHELTER WALL PANEL
9	1	80-7223-00	SHELTER WALL PANEL
10	13	55-6010-02	CARRIAGE BOLT SS 5/16-18 X 1
11	181	55-2002-03	NUT HEX FLANGED SS 5/16
12	1	72-0624-00	LH SUB FLOOR
13	1	72-0625-00	RH SUB FLOOR
16	4	80-4941-00	LIFTING EYE
17	168	55-6010-03	CARRIAGE BOLT SS 5/16-18 X 3/4
18	9	55-2019-00	5/16-18 NUTSERT - SEALING
19	12	55-6006-06	3/8-16 x 1.25 SS HHCS
20	1	55-6006-10	3/8-16 x 1.00 SS HHCS
21	100	55-8002-06	Washer Flat SS 3/8
22	45	55-2000-03	NYLOCK NUT SS 3/8-16
24	1	72-0634-00	MELAMINE PANEL
25	1	72-0633-00	MELAMINE PANEL
28	1	72-0626-00	MELAMINE PANEL
32	1	TILE FLOOR-ATT	TILE FLOOR
39	4	55-8001-00	Washer Split Ring SS 1/4
45	2	80-7232-00	CELING PANEL
46	1	80-7235-00	SHELTER CELING PANEL
47	6	55-2033-00	NUTSERT AHS4-420-165
48	1	50-1809-00	80x80 ROOF ASSY
52	1	30-0013-02	
59	8	58-0049-05	LADDER RACK HORIZONTAL TEE
61	5	80-4879-00	LADDER RACK BRKT
71	5	58-0121-06	4S BOX, DBL GANG, 2-1/8" DEEP W/DIMPLE
76	1	80-7236-00	SHELTER CELING PANEL
79	4	556731-LIGHT	4 LED LIGHT ASSY
86	7	TRIM-1	
87	8	80-4914-00	SHELTER CORNER TRIM
88	12	TRIM-3	
89	4	TRIM-4	
94	4	55-9044-00	ANCHOR SHACKLE
98	1	80-7240-00	36" THRESHOLD
99	1	80-4896-NP	AWNING - SHELTER
105	8	55-6009-01	SCREW TEK SS #12 X 3/4
113	4	55-2008-06	7/8-14 ZN NYLOCK
114	4	55-5001-14	7/8-14 X 5.00 HHCS
120	1	72-0304-01	MELAMINE PANEL
126	4	55-8001-09	Washer Split Ring SS 3/8
132	1	58-0142-11	.25 X 2 X 14 GRD BAR
158	1	80-6595-00	DOOR ALARM BRKT
159	1	DOOR ALARM	
179	1	TRIM-16.725	
203	1	80-7233-00	SHELTER CELING PANEL
204	1	80-7234-00	SHELTER CELING PANEL
208	1	58-0218-00	LIGHT SWITCH COVER 4" SQ
209	1	80-7222-00	SHELTER,WALL CORNER
211	1	80-7225-00	WALL CORNER
212	1	80-7224-00	SHELTER WALL PANEL
213	4	80-7226-00	CORNER SUPPORT
214	1	80-7227-00	WALL CORNER
217	1	80-7230-00	TOP DOOR SEAL CHNL
218	2	80-6941-00	SIDE DOOR SEAL CHNL
219	32	12-24_CAGE_NUT	12-24 CAGE NUT
220	20	55-5104-00	SCREW FHPH SS 12-24 X 1"
221	2	58-0191-14	COMP LUG 10AWG, 2 HOLE, 10 STUD, 5/8 CTR
222	4	55-6006-03	Screw HHCS SS 1/4-20 x 3/4
223	1	72-0627-00	MELAMINE HDR PANEL
224	1	72-0628-00	MELAMINE PANEL
225	1	72-0629-00	MELAMINE PANEL
226	2	72-0630-00	MELAMINE PANEL
228	4	55-2036-00	AHS4-616-150BS NUTSERT
229	1	72-0631-00	TELCO BOARD-WHITE
233	1	CONTROLLER	
236	1	58-9058-00	FOLD DOWN DESK
237	1	ECUA12ACA-AC	SLIMPAC 1
238	1	50-2017-00	36" DOOR FRAME
240	4	80-7237-00	A/C WALL SUPPORT
241	2	80-7238-00	A/C WALL SUPPORT
242	2	80-7239-00	A/C WALL SUPPORT
243	26	53-0012-00	RIVET POP SS/SS .187 X .126-.250 CE
244	1	50-2019-00	36" DOOR ASSEMBLY
245	1	80685	SUPPLY GRILL
246	1	80680	RETURN GRILL
247	2	58-0142-17	ROSENBERGER GRB-ATTG0424PUNI
253	1	58-0122-04	1/2" RAISED GFCI COVER 4" SQ
254	2	58-0224-07	20A RECEPT
265	2	545047-AM	
267	5	80-7217-00	ROXTEC MNT PLATE
268	2	72-0632-00	MELAMINE PANEL
269	1	2349062-LOUVER	FRAME: TOP & BOTTOM
271	2	58-0309-05	12X12X4 PULL BOX
276	2	2"X60 CONDUIT	2" EMT
277	1	EXT WALL LOUVER	
278	1	HVAC CONTROL BOX	
280	2	58-0058-02	EXT. LED MOTION LIGHT
281	12	25-0005-00	HALO STANDOFF CLAMPS - 1"
282	1	GROUND LOOP	
288	4	58-0057-02	1" inch 90 degree liquidtight non-metallic fitting
289	1	1X3 CARFLEX	
290	1	1X26 CARFLEX	
293	2	INT-EXT GRD CABLE	
296	4	80-7072-00	GPS MOUNT
297	4	55-6025-06	3/8-16 X 4.5 SS HHCS
298	4	55-2002-07	Nut Hex SS 3/8-16
299	3	58-0121-02	COVER F/4" SQ BOX
302	2	58-0264-04	ROXTEC EZENTRY 4/4
306	1	72-0635-00	MELAMINE PANEL
307	2	80-7073-00	COVER PLATE
310	2	23-0181-00	FLEXIBLE PLASTIC PLUG 1-1/2"
313	1	ALARM BLOCK-ATT	
314	3	80-7075-00	RACK BRACE
315	4	80-7070-00	PAINTED UNISTRUT
316	32	55-5061-00	HHCS ZN 3/8-16 X 1 1/4
318	2	80-6845-00	GPS PIPE MOUNT
319	4	U-BOLT	
320	4	58-0049-32	AUX CABLE RACK BRKT
321	1	SMOKE DETECTER	
322	1	582127000zz041- NETSURE	
326	1	55-9304-03	2" x 7" PIPE NIPPLE
327	4	58-9008-03	2" EMT BOX CONNECTOR
328	2	58-0271-02	2" LOCK RING
329	2	55-9383-01	2" PLASTIC PIPE BUSHING
335	9	55-6006-34	1/2-13 X 2.5 SS HHCS
337	9	55-8001-12	.50 SS LOCK WASHER
338	9	80-6847-00	1/2" ID X 2" OD SS WASHER
339	1	58-0309-04	SCE-24EL2408LP
340	7	58-0191-09	COMP LUG #2, 2 HOLE,STRNDED, 2 HOLE SHRT
341	5	58-0264-03	ROXTEC EZENTRY 16/16
343	2	80-7038-00	SIDE AC SEAL
344	1	80-7039-00	TOP AC SEAL
345	1	LOAD CENTER	
346	2	80-7035-00	LIGHT MNT PLATE
347	1	80-7036-00	WALL SLEEVE
348	2	58-0027-00	RECEPTACLE BOX GFCI W/MOUNTING EARS
349	16	55-2033-01	1/4-20 NUTSERT - CLOSED END
350	16	90-0017-00	1/4-20 x 1.00 SS SECURITY BOLT
351	16	55-9212-00	1/4" SEALING WASHER
352	24	58-0049-44	2" CABLE RACK END CAPS
353	16	58-0049-45	WALL BRKT F/2" CABLE RACK
354	4	58-0049-46	LADDER RACK 2" X 57/58" SOLID
355	2	58-0049-47	LADDER RACK 2" X 47/48" SOLID
356	1	58-0049-48	LADDER RACK 2" X 25" SOLID

RIGHT HAND WALL DETAIL

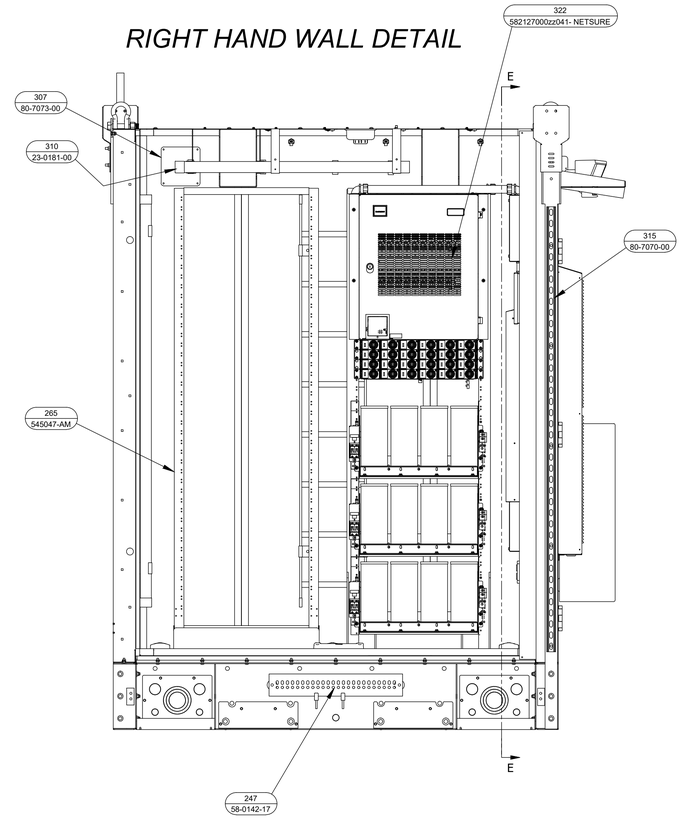

FRONT WALL DETAIL

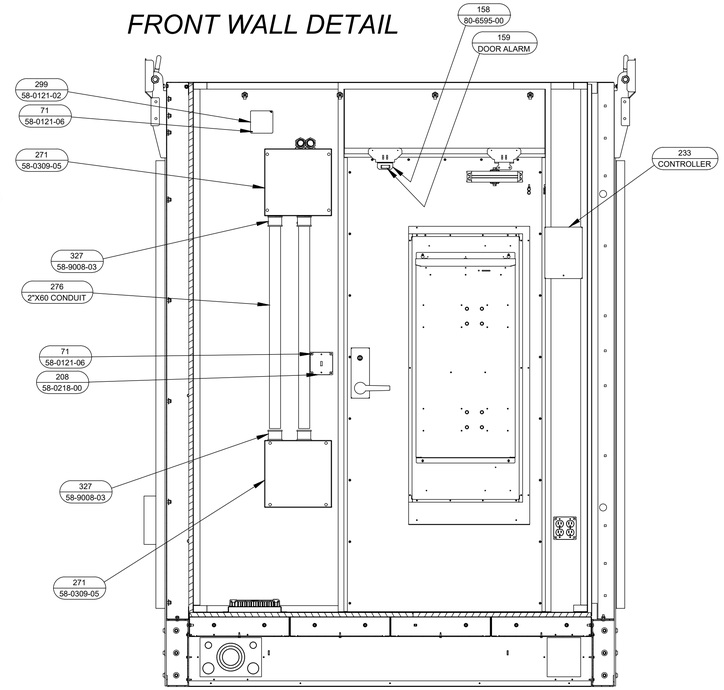

SECTION E–E

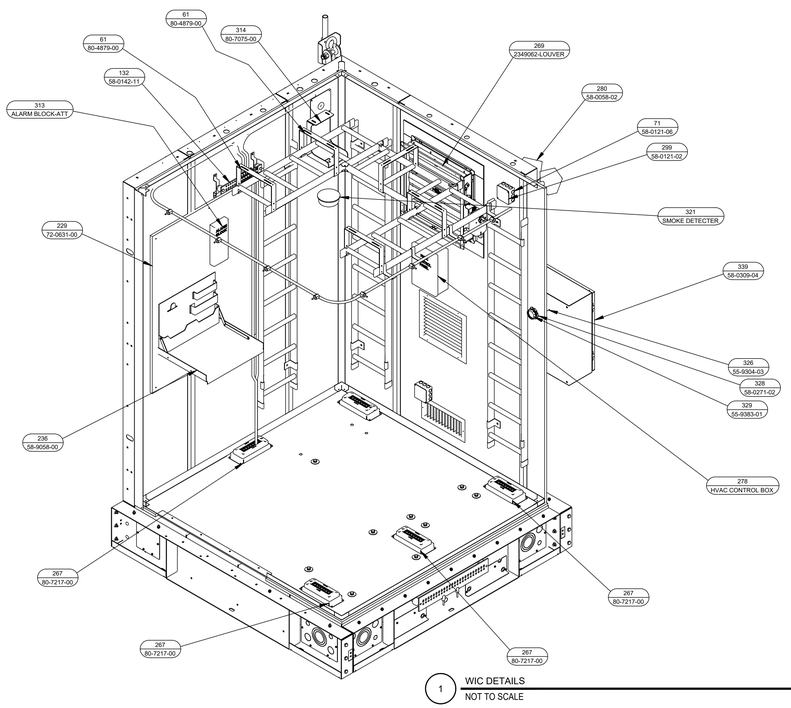

1 WIC DETAILS
NOT TO SCALE

BACK WALL DETAIL

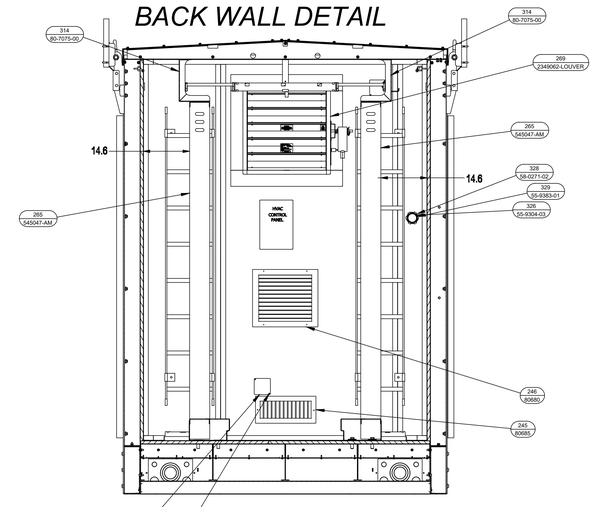

SECTION F–F

SITE TYPE: MONOPOLE/WIC

AT&T Site ID:
COL02568
6915 SPACE VILLAGE AVENUE
COLORADO SPRINGS, CO 80915

Tower Owner:
CROWN CASTLE
2055 SOUTH STEARMAN DRIVE
CHANDLER, AZ 85286

PREPARED FOR:
at&t Mobility
161 Inverness Drive West 2nd floor
Englewood, Colorado 80112

A&E:
TELCYTE INFRASTRUCTURE SERVICES
3450 N HIGLEY RD - SUITE 102,
MESA, AZ 85215

AT&T SITE NO:	COL02568
BU NO:	823722
DRAWN BY:	AK
CHECKED BY:	CM

REV	DATE	DESCRIPTION
A	2/25/22	PRELIMINARY CD'S
B	03/21/22	CLIENT REVISIONS
C	5/19/22	CLIENT REVISIONS

Licensor:
COLORADO LICENSED
TIM ALEXANDER
44563
EXP
10/31/2023
PROFESSIONAL ENGINEER
SIGNED, 19 MAY 2022

Issued For:
5/19/22
PRELIMINARY CD'S

SHEET TITLE:
WIC DETAILS

SHEET NUMBER:
S-2

0J7500D-ATT

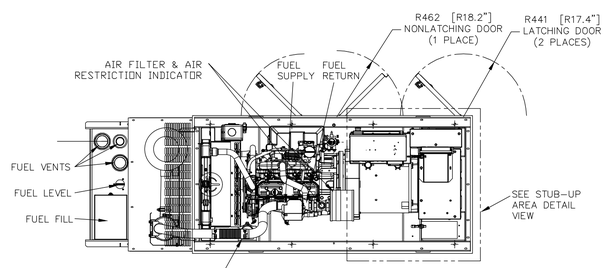

TOP VIEW

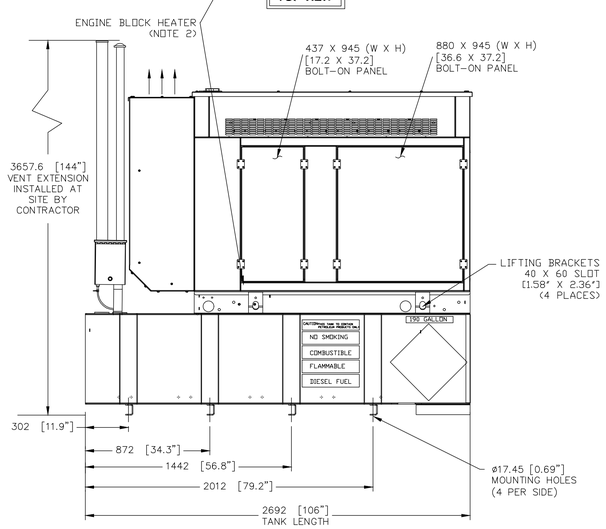

LEFT SIDE VIEW

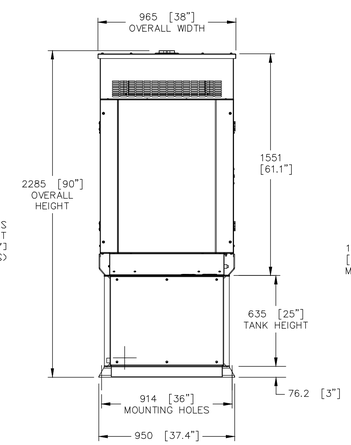

REAR VIEW

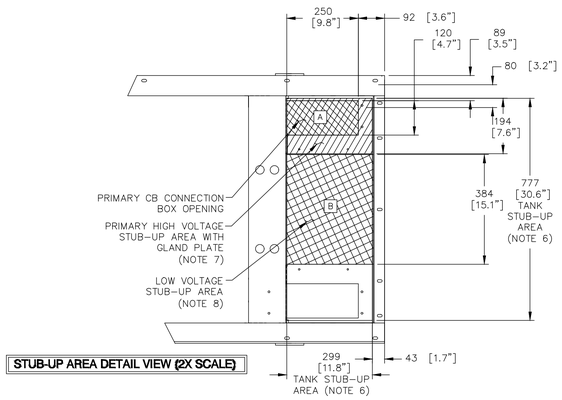

STUB-UP AREA DETAIL VIEW (2X SCALE)

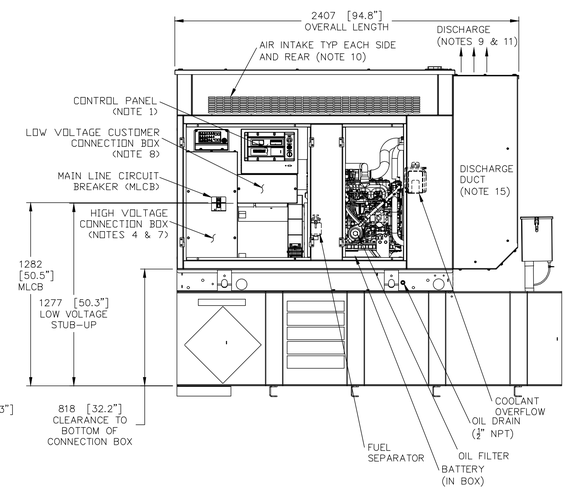

RIGHT-SIDE VIEW

(SHOWN WITH DOORS REMOVED)

RECOMMENDED ELECTRICAL STUB-UPS (SEE DETAILED VIEW & TOP VIEW)	
DESCRIPTION	INSIDE BASE
HIGH VOLTAGE STUB-UP AREA 1) AC LOAD LEAD CONDUIT AREA. 2) 120/240 VAC FROM UTILITY (BY OTHERS) (GLAND PLATE INCLUDED)	A
LOW VOLTAGE STUB-UP AREA 1) TRANSFER SWITCH/ COMMUNICATION CONDUITS. COMMUNICATIONS AND 2-WIRE START MUST NOT BE RUN IN CONDUIT WITH AC WIRING. (SEE NOTE 8)	B

NOTES:

1. CONTROL PANEL INCLUDES BATTERY CHARGER WITH THREE PRONG CORD.
2. 1500W 120VAC ENGINE BLOCK HEATER WITH THREE PRONG CORD.
3. 12 VOLT NEGATIVE GROUND SYSTEM.
4. GENERATOR MUST BE GROUNDED.
5. CENTER OF GRAVITY & WEIGHT MAY SHIFT SLIGHTLY DUE TO UNIT OPTIONS.
6. STUB-UPS: BASE TANK REQUIRES ALL STUB-UPS TO BE IN THE REAR TANK STUB-UP AREA.
7. HIGH VOLTAGE STUB-UP AREA INCLUDES THE AC LOAD LEAD CONNECTION TO THE MAIN LINE CIRCUIT BREAKER, THE NEUTRAL CONNECTION, AND AUXILIARY 120/240V CONNECTION.
8. CONNECTION POINTS FOR CONTROL WIRES. BOTTOM OF LOW VOLTAGE CUSTOMER CONNECTION BOX HAS KNOCKOUTS FOR 1/2" AND 3/4" CONDUIT FITTINGS.
9. MUST ALLOW FREE FLOW OF DISCHARGE AIR AND EXHAUST. SEE SPEC SHEET FOR MINIMUM AIR FLOW AND MAXIMUM RESTRICTION REQUIREMENTS.
10. MUST ALLOW FREE FLOW OF INTAKE AIR. SEE SPEC SHEET FOR MINIMUM AIR FLOW AND MAXIMUM RESTRICTION REQUIREMENTS.
11. GENERATOR MUST BE INSTALLED SUCH THAT FRESH COOLING AIR IS AVAILABLE AND THAT DISCHARGE AIR FROM THE RADIATOR IS NOT RECIRCULATED.
12. IT IS THE RESPONSIBILITY OF THE INSTALLATION TECHNICIAN TO ENSURE THAT THE GENERATOR INSTALLATION COMPLIES WITH ALL APPLICABLE CODES, STANDARDS, AND REGULATIONS.
13. 190 GALLON USEABLE CAPACITY BASETANK IS INCLUDED WITH GENERATOR.
14. UNIT IS SHIPPED WITH FUEL SUPPLY AND RETURN LINES DISCONNECTED AND PLUGGED BETWEEN ENGINE AND FUEL TANK. THIS HAS BEEN DONE TO FACILITATE PRESSURE TESTING OF THE TANK IN THE FIELD. FOR INFORMATION REGARDING CONNECTING THE FUEL SUPPLY AND RETURN LINES PRIOR TO START UP, SEE THE FUEL TANK FIELD TESTING PROCEDURE (0E5082) SUPPLIED IN THE TANK LOOSE VENTS KIT, WHICH IS SHIPPED WITH THIS GENERATOR.
15. SEE DRAWING 0C3850 FOR DISCHARGE DUCT REMOVAL. REMOVAL OF DUCT WILL PROVIDE ACCESS TO MUFFLER FOR SERVICING.

WEIGHT DATA: (INCLUDES EMPTY FUEL TANK)
GENERATOR: 1409 KG (3106 LBS)
GENERATOR WITH WOODEN SHIPPING SKID: 1474 KG (3250 LBS)

UNITS: mm [INCHES]

INSTALLATION DRAWING

INSTALL SD030
DIESEL 2.4L G16
L2A Y02 SSM
190 GAL EXT VNT/FILL BASETANK

GENERAC POWER SYSTEMS
Waukesha
P.O. BOX 8
WAUKESHA, WIS. 53187

FILE NAME	SIZE B
SCALE	FIRST USE CALIFORNIA
DWG NO. 0J7500D	REV A

1 GENERATOR DETAILS
NOT TO SCALE

SITE TYPE: MONOPOLE/WIC

AT&T Site ID:
COL02568
6915 SPACE VILLAGE AVENUE
COLORADO SPRINGS, CO 80915

Tower Owner:
CROWN CASTLE
2055 SOUTH STEARMAN DRIVE
CHANDLER, AZ 85286

PREPARED FOR:
at&t Mobility
161 Inverness Drive West 2nd floor
Englewood, Colorado 80112

A&E:
TELCYTE INFRASTRUCTURE SERVICES
3450 N HIGLEY RD - SUITE 102,
MESA, AZ 85215

AT&T SITE NO:	COL02568
BU NO:	823722
DRAWN BY:	AK
CHECKED BY:	CM

REV	DATE	DESCRIPTION
A	2/25/22	PRELIMINARY CD'S
B	03/21/22	CLIENT REVISIONS
C	5/19/22	CLIENT REVISIONS

Licensor:
COLORADO LICENSED
TIM ALEXANDER
44563
EXP 10/31/2023
PROFESSIONAL ENGINEER
SIGNED, 19 MAY 2022

IT IS A VIOLATION OF LAW FOR ANY PERSON, UNLESS THEY ARE ACTING UNDER THE DIRECTION OF A LICENSED PROFESSIONAL ENGINEER, TO ALTER THIS DOCUMENT.

Issued For:
5/19/22
PRELIMINARY CD'S

SHEET TITLE:
GENERATOR DETAILS

SHEET NUMBER:
S-3

1. SUBMITTAL OF BID INDICATES CONTRACTOR IS COGNIZANT OF ALL JOB SITE CONDITIONS AND WORK TO BE PREFORMED UNDER THIS CONTRACT. CONTRACTOR IS RESPONSIBLE FOR ALL FIELD VERIFICATION.
2. THESE PLANS ARE DIAGRAMMATIC ONLY, AND NOT TO BE SCALED.
3. ELECTRICAL CONTRACTOR SHALL PROVIDE ALL LABOR, MATERIALS, INSURANCE, EQUIPMENT, INSTALLATION, CONSTRUCTION TOOLS, TRANSPORTATION, ETC. FOR A COMPLETE AND PROPERLY OPERATIVE SYSTEM ENERGIZED THROUGHOUT AND AS INDICATED ON DRAWINGS, AS SPECIFIED HEREIN AND/OR AS OTHERWISE REQUIRED.
4. ALL MATERIALS AND EQUIPMENT SHALL BE NEW AND IN PERFECT CONDITION WHEN INSTALLED AND SHALL BE OF THE BEST GRADE OR GROUP OF EQUIPMENT. MATERIALS SHALL BE LISTED AND APPROVED BY UNDER-WRITER'S LABORATORY AND SHALL BEAR THE INSPECTION LABEL "J" WHERE SUBJECT TO SUCH APPROVAL MATERIALS SHALL MEET WITH APPROVAL OF THE DIVISION OF INDUSTRIAL SAFETY AND ALL GOVERNING BODIES HAVING JURISDICTION. MATERIALS SHALL BE MANUFACTURED IN ACCORDANCE WITH APPLICABLE STANDARDS ESTABLISHED BY ANSI, NEMA AND NBFU.
5. ALL CONDUIT INSTALLED SHALL BE SURFACE MOUNTED UNLESS OTHERWISE NOTED.
6. ELECTRICAL CONTRACTOR SHALL CARRY OUT HIS WORK WITH ACCORDANCE WITH ALL GOVERNING STATE, COUNTY, LOCAL CODES AND O.S.H.A.
7. ELECTRICAL CONTRACTOR SHALL SECURE ALL NECESSARY ELECTRICAL PERMITS, AND PAY ALL REQUIRED FEES.
8. COMPLETE JOB SHALL BE GUARANTEED FOR A PERIOD OF NO LESS THAN ONE YEAR AFTER THE DATE OF JOB COMPLETION. ANY WORK, MATERIAL, OR EQUIPMENT FOUND TO BE FAULTY DURING THAT PERIOD SHALL BE CORRECTED AT ONCE, UPON WRITTEN NOTIFICATION, AT THE EXPENSE OF THE ELECTRICAL CONTRACTOR.
9. ALL CONDUIT ONLY (C.O.) SHALL HAVE A PULL WIRE OR ROPE, AND TRUE TAPE.
10. PROVIDE THE OWNER WITH ONE SET OF COMPLETE DIMENSIONS AND CIRCUITS, WITHIN 10 WORKING DAYS OF PROJECT COMPLETION. ELECTRICAL "AS BUILT" DRAWINGS, SHOWING ACTUAL LOCATION OF CONDUITS.
11. ALL BROCHURES, OPERATING MANUALS, CATALOGS, SHOP DRAWINGS, ETC. SHALL BE TURNED OVER TO PROJECT MANAGER AT JOB COMPLETION.
12. USE T-TAP CONNECTIONS ON ALL MULTI-CIRCUITS WITH COMMON NEUTRAL CONDUCTOR FOR LIGHTING FIXTURE. ALL CONDUCTORS SHALL BE COPPER.
13. THE EXTERIOR GROUND RING SHALL BE TESTED PER AT&T SPECIFICATIONS AND SHALL HAVE A RESISTANCE TO EARTH OF 5 OHMS OR LESS. IF NOT NOTIFY ENGINEER.
14. ALL CIRCUIT BREAKERS, FUSES AND ELECTRICAL EQUIPMENT SHALL HAVE AN INTERRUPTING RATING NOT LESS THAN THE MAXIMUM SHORT =CIRCUIT CURRENT TO WHICH THEY MAY BE SUBJECTED, AND A MINIMUM OF 10,000 A.I.C.
15. THE ENTIRE ELECTRICAL INSTALLATION SHALL BE GROUNDED AS REQUIRED BY ALL APPLICABLE CODES.
16. PATCH, REPAIR, AND PAINT ANY AREA THAT HAS BEEN DAMAGED IN THE COURSE OF THE ELECTRICAL WORK.
17. IN DRILLING HOLES INTO CONCRETE (WHETHER FOR FASTENING OR ANCHORING PURPOSES OR PENETRATIONS THROUGH THE FLOOR FOR CONDUIT RUNS, PIPE RUNS, ETC.) IT MUST BE CLEARLY UNDERSTOOD THAT TENDONS AND RE-BARS WILL NOT BE DRILLED INTO, CUT, OR DAMAGED UNDER ANY CIRCUMSTANCES.
18. LOCATION OF TENDONS AN RE-BARS ARE NOT DEFINITELY KNOWN AND THEREFORE MUST BE SEARCHED FOR BY APPROPRIATE METHODS AND EQUIPMENT VIA X-RAY, OR OTHER DEVICES THAT CAN ACCURATELY LOCATE THE REINFORCING STEEL TENDONS.
19. PENETRATIONS IN FIRE RATED WALLS SHALL BE FIRE STOPPED IN ACCORDANCE WITH APPLICABLE LOCAL BUILDING CODES. USING U.L. RATED MATERIALS.
20. ELECTRICAL CONTRACTOR IS TO COORDINATE WITH UTILITY COMPANY FOR CONNECTION OF TEMPORARY AND PERMANENT POWER TO THE SITE. THE TEMPORARY POWER AND ALL HOOK-UP COSTS SHALL BE PAID BY THE CONTRACTOR.
21. ELECTRICAL CONTRACTOR SHALL SUBMIT SHOP DRAWINGS AND/OR CATALOG CUT-SHEETS ON ALL NON-SPECIFIED ORIGINAL MATERIALS AND EQUIPMENT, TO PROJECT MANAGER PRIOR TO COMMENCEMENT OF THE WORK.
22. UPON COMPLETION OF WORK, CONDUCT CONTINUITY AND SHORT CIRCUIT, AS WELL AS, GROUNDING TEST, GROUNDING TEST SHALL BE PREFORMED BY INDEPENDENT TESTING AGENCY, WITH WRITTEN REPORT SUBMITTED TO THE PROJECT MANAGER FOR REVIEW AND APPROVAL.
23. CLEAN PREMISES DAILY OF ALL DEBRIS RESULTING FROM WORK AND LEAVE WORK PREMISES IN A COMPLETE AND UNDAMAGED CONDITION.
24. ALL EXTERIOR WALL PENETRATIONS SHALL BE SEALED WITH POLYSEAM SEALANT.
25. ALL #2 TINNED BARE COPPER DOWNLEADS TO BE PROTECTED BY 1/2" P.V.C. PIPE AND SECURED.
26. COMPRESSION FITTINGS TO BE USED ON ALL CONDUITS (NO SET SCREWS).
27. ALL #6 STRANDED COPPER WITH GREEN INSULATION TO BE ATTACHED WITH CRIMPED DOUBLE LUG, ATTACHED WITH NUTS, BOLTS AND STAR WASHERS TYPICAL AND NO-OX GREASE BETWEEN LUG AND BUS BAR.
28. ALL ABOVE GROUND CONDUIT SHALL BE RIGID GALVANIZED CONDUIT WITH WEATHERPROOF FITTINGS.

*DATE OF JOB COMPLETION SHALL BE THE DATE ON THE CONTRACTOR'S "NOTICE OF COMPLETION" SUBMITTED TO THE OWNER.

ELECTRICAL NOTES

AAV	ALTERNATE ACCESS VENDOR
AC	ALTERNATING CURRENT
AFF	ABOVE FINISHED FLOOR
AFG	ABOVE FINISHED GRADE
AIC	AMPERES INTERRUPT CURRENT
AL	ALUMINUM
A/G	ABOVE GROUND
AGB	ANTENNA GROUND BAR
ATS	AUTOMATIC TRANSFER SWITCH
AWG	AMERICAN WIRE GAUGE
AWS	ADVANCED WIRELESS SERVICES
BATT	BATTERY
BBU	BASEBAND UNIT
BCW	BARE COPPER WIRE
BSCW	BARE STRANDED COPPER WIRE
BTCW	BARE TINNED COPPER WIRE
C	CONDUIT
CAB	CABINET
CGB	COLLECTOR GROUND BAR
CKT	CIRCUIT
CT	CURRENT TRANSFORMER
CU	COPPER
DC	DIRECT CURRENT
DEI	DIGITAL EXPANSION INTERFACE
DISC	DISCONNECT
EGB	EXTERIOR GROUND BAR
EMT	ELECTRICAL METALLIC TUBING
FMT	FLEXIBLE METALLIC TUBING
G	GROUND
GEN	GENERATOR
GFCI	GROUND FAULT CURRENT INTERRUPTER
GIP	GENERATOR INTERFACE PANEL
GND	GROUND
GPS	GLOBAL POSITIONING SYSTEM
GR	GROWTH (CABINET)
GRC	GALVANIZED RIGID (STEEL) CONDUIT
HVAC	HEATING, VENTILATING, AND AIR CONDITIONING
IPC	IDAHO POWER COMPANY
IGB	INTERIOR GROUND BAR
IGR	INTERIOR GROUND RING (HALO)
IMC	INTERMEDIATE METALLIC CONDUIT
ISCW	INSULATED STRANDED COPPER WIRE
KAIC	KILOAMPERES INTERRUPT CURRENT
LTE	LONG TERM EVOLUTION
MGB	MAIN (OR MASTER) GROUND BAR
MIN	MINIMUM
MTS	MANUAL TRANSFER SWITCH
MW	MICROWAVE
N	NEUTRAL
NEC	NATIONAL ELECTRIC CODE
NID	NETWORK INTERFACE DEVICE
OC	ON CENTER
O/H	OVERHEAD
PCS	PERSONAL COMMUNICATION SERVICES
PPC	POWER PROTECTION CABINET
PRC	PRIMARY RADIO CABINET
PT	POTENTIAL TRANSFORMER
PVC	POLYVINYL CHLORIDE
PWR	POWER
RAC	RIGID ALUMINUM CONDUIT
RECT	RECTIFIER
RET	REMOTE ELECTRICAL TILT
RGS	RIGID GALVANIZED STEEL
RMT	RIGID METALLIC TUBING
RRH	REMOTE RADIO HEAD
RRU	REMOTE RADIO UNIT
RU	RACK UNIT
SCA	SHORT CIRCUIT AMPERES
SCCR	SHORT CIRCUIT CURRENT RATING
SPD	SURGE PROTECTIVE DEVICE
S/S	STAINLESS STEEL
TVSS	TRANSIENT VOLTAGE SURGE SUPPRESSOR
TYP	TYPICAL
U/G	UNDERGROUND
UTP	UNSHIELDED TWISTED PAIR
VZW	VERIZON WIRELESS
WP	WEATHERPROOF
WW	WIREWAY
XFMR	TRANSFORMER

PANELBOARD
DISCONNECT SWITCH
METER
SIMPLEX RECEPTACLE
DUPLEX RECEPTACLE
QUADRUPLEX RECEPTACLE
GENERATOR OR SPECIAL RECEPTACLE
$ TOGGLE SWITCH, 1P
$3 3-WAY SWITCH, 1P
RECESSED FLUORESCENT LUMINAIRE
SURFACE MOUNTED FLUORESCENT LUMINAIRE
WRAPAROUND FLUORESCENT LUMINAIRE
WALL-MOUNTED LUMINAIRE
EXIT SIGN
T THERMOSTAT
SD SMOKE DETECTOR
H2 HYDROGEN DETECTOR
FE FIRE EXTINGUISHER
P PHOTOCELL

TINNED COPPER GROUND BAR
COPPER CLAD GROUND ROD
COPPER GROUND ROD WITH INSPECTION SLEEVE (TEST WELL)
MECHANICAL CONNECTION (LUG CRIMP OR C CLAMP)
COMPRESSION TYPE CONNECTION
EXOTHERMIC CONNECTION (CADWELD)
@:# BRANCH CKT. HOMERUN TO PANEL. @ INDICATES PANEL, # INDICATES CKT. NO.
$D DIMMER SWITCH, 1P
AGP A/G AC POWER
DCP A/G DC POWER
O/H AC POWER
UGP U/G AC POWER
AGT A/G TELEPHONE RUN
UGF U/G FIBER
UGT U/G TELEPHONE RUN
HFLEX HYBRID FLEX CABLE
GAS GAS LINE
UGW U/G WATER LINE

PANEL A
PANELBOARD OR SWITCHGEAR
COMBINATION METER & MAIN BREAKER
STANDALONE METER
COMBINATION MOTOR STARTER
MOTOR
FUSED DISCONNECT
GENERATOR
UNFUSED DISCONNECT
SPLICE BOX, JUNCTION BOX, OR HANDHOLE
DISCONNECT WITH BREAKER
GUTTER OR WIREWAY
FUSED SWITCH (INSIDE SWITCHBOARD)
AUTOMATIC OR MANUAL TRANSFER SWITCH
CIRCUIT BREAKER (INSIDE SWITCHGEAR)
ELECTRICAL SERVICE WEATHERHEAD
POTENTIAL TRANSFORMER
CURRENT TRANSFORMER
TELEPHONE SERVICE WEATHERHEAD
GROUND
GENERATOR PLUG
FEEDER KEY
CONDUIT ADAPTER OR COUPLING
J

AT&T Site ID:
COL02568
6915 SPACE VILLAGE AVENUE
COLORADO SPRINGS, CO 80915

Tower Owner:
CROWN CASTLE
2055 SOUTH STEARMAN DRIVE
CHANDLER, AZ 85286

PREPARED FOR:
at&t Mobility
161 Inverness Drive West 2nd floor
Englewood, Colorado 80112

A&E:
TELCYTE INFRASTRUCTURE SERVICES
3450 N HIGLEY RD - SUITE 102,
MESA, AZ 85215

AT&T SITE NO:	COL02568
BU NO:	823722
DRAWN BY:	AK
CHECKED BY:	CM

REV	DATE	DESCRIPTION
A	2/25/22	PRELIMINARY CD'S
B	03/21/22	CLIENT REVISIONS
C	5/19/22	CLIENT REVISIONS

Licensor:
COLORADO LICENSED
TIM ALEXANDER
44563
EXP 10/31/2023
PROFESSIONAL ENGINEER
SIGNED, 19 MAY 2022

IT IS A VIOLATION OF LAW FOR ANY PERSON, UNLESS THEY ARE ACTING UNDER THE DIRECTION OF A LICENSED PROFESSIONAL ENGINEER, TO ALTER THIS DOCUMENT.

Issued For:
5/19/22
PRELIMINARY CD'S

SHEET TITLE:
GENERAL ELECTRICAL/ GROUNDING NOTES

SHEET NUMBER:
E-1

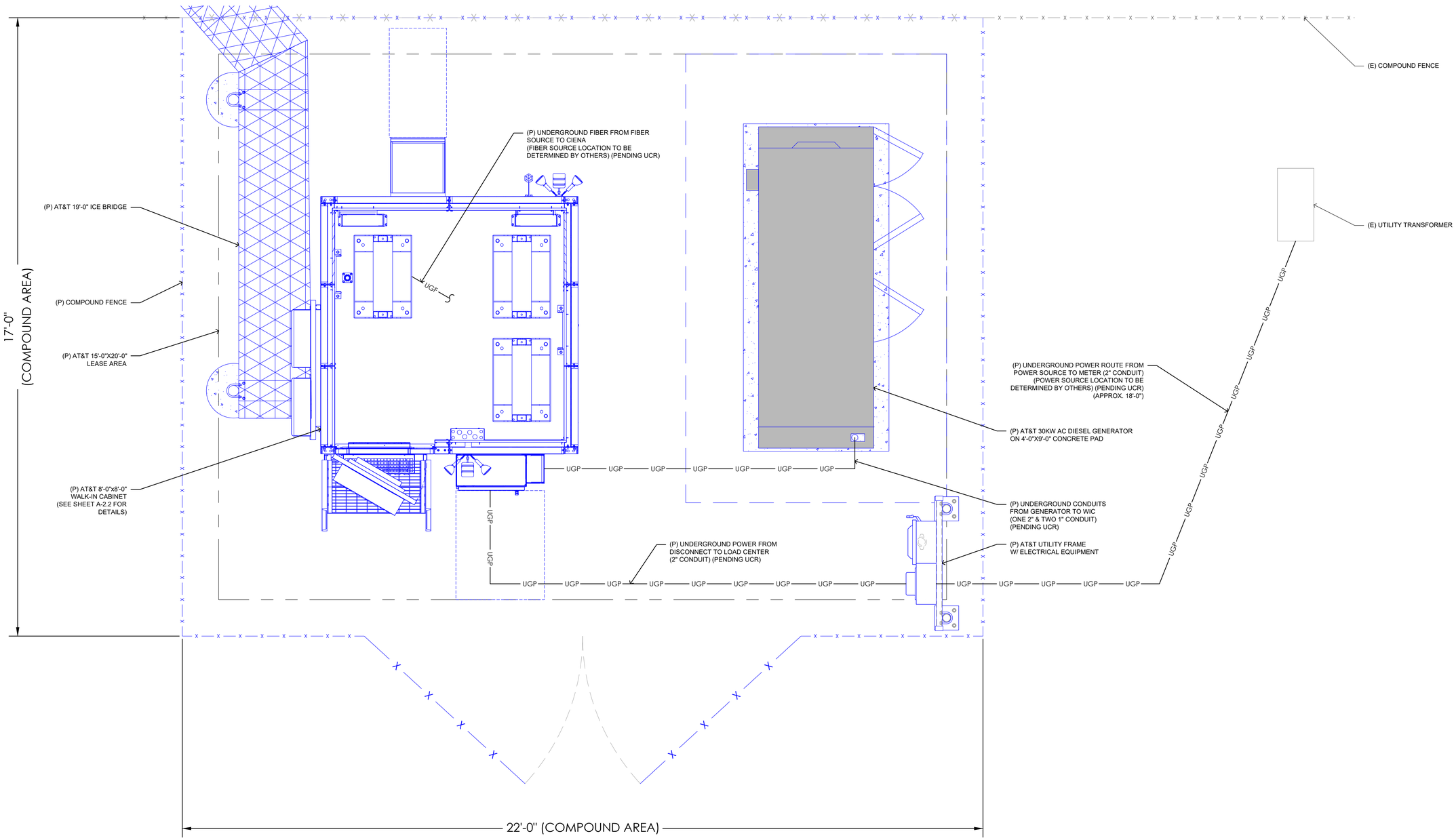

1 PROPOSED UTILITY SITE PLAN

SCALE: 3/8"=1'-0" (FULL SIZE) 3/16"=1'-0" (11x17)

N

SITE TYPE: MONOPOLE/WIC

AT&T Site ID:
COL02568
6915 SPACE VILLAGE AVENUE
COLORADO SPRINGS, CO 80915

Tower Owner:
CROWN CASTLE
2055 SOUTH STEARMAN DRIVE
CHANDLER, AZ 85286

PREPARED FOR:
at&t Mobility
161 Inverness Drive West 2nd floor
Englewood, Colorado 80112

A&E:
TELCYTE INFRASTRUCTURE SERVICES
3450 N HIGLEY RD - SUITE 102,
MESA, AZ 85215

AT&T SITE NO:	COL02568
BU NO:	823722
DRAWN BY:	AK
CHECKED BY:	CM

REV	DATE	DESCRIPTION
A	2/25/22	PRELIMINARY CD'S
B	03/21/22	CLIENT REVISIONS
C	5/19/22	CLIENT REVISIONS

Licensor:
COLORADO LICENSED
TIM ALEXANDER
44563
EXP 10/31/2023
PROFESSIONAL ENGINEER
SIGNED, 19 MAY 2022

Issued For:
5/19/22
PRELIMINARY CD'S

SHEET TITLE:
UTILITY SITE PLAN

SHEET NUMBER:
E-2

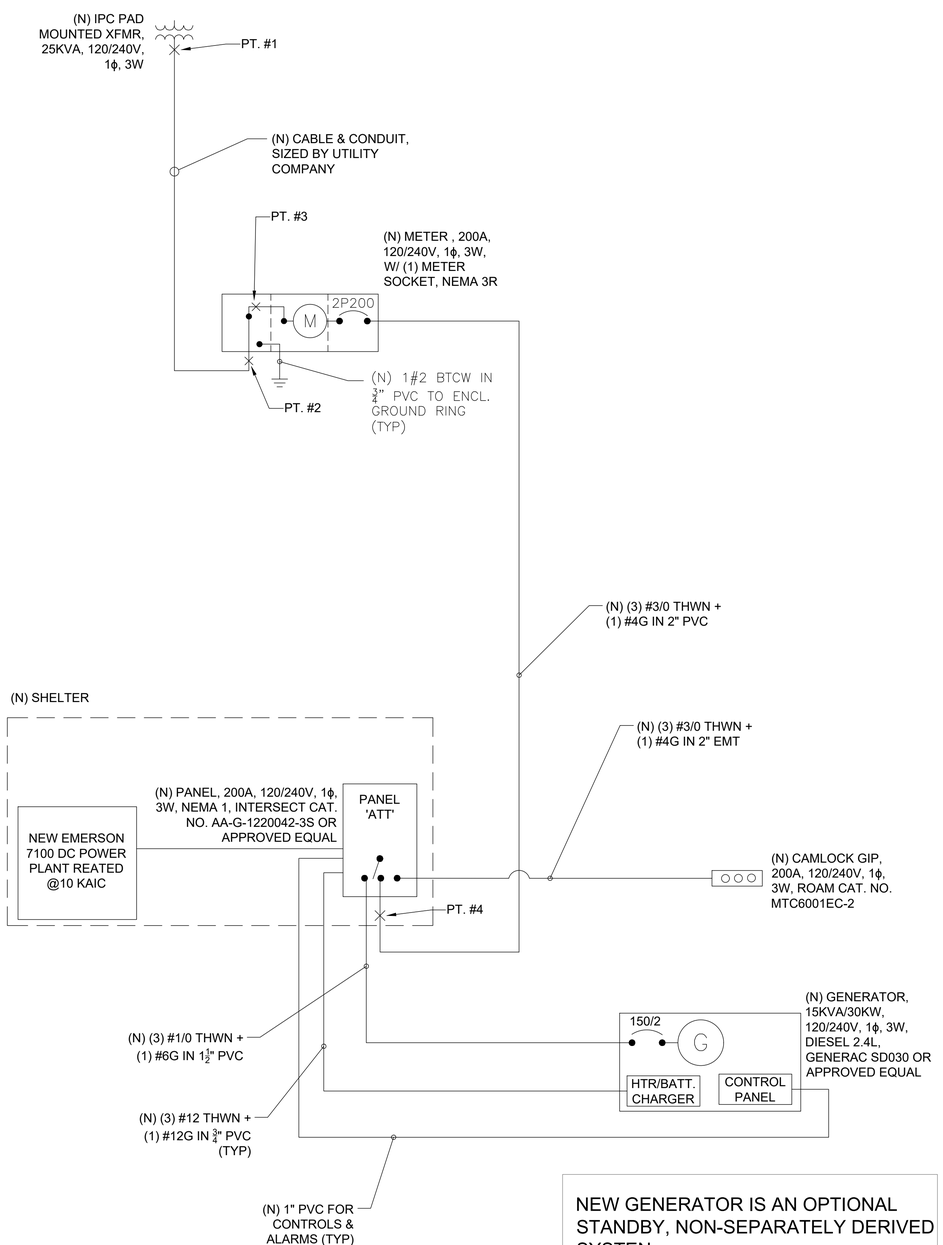

NOTES:

1. ACTUAL VALUES FOR FAULT CURRENT SHOWN IN DETAIL 1.

2 ONE-LINE DIAGRAM
N.T.S.

AC POWER PANEL No. 1
120/240 VOLTS, 1-PHASE, 3-WIRE, 200
MAIN BREAKER RATING (A) : 200 | SYSTEM VOLTAGE (V) : 240

DESCRIPTION	VA	c/nc	BKR	POSN	L1	L2	POSN	BKR	c/nc	VA	DESCRIPTION
RECTIFIER # 1	1725	c	30	1	3450		2	30	c	1725	RECTIFIER # 4
	1725	c		3		3450	4		c	1725	
RECTIFIER # 2	1725	c	30	5	3450		6	30	c	1725	RECTIFIER # 5
	1725	c		7		3450	8		c	1725	
RECTIFIER # 3	1725	c	30	9	3450		10	30	c	1725	RECTIFIER # 6
	1725	c		11		3450	12		c	1725	
RECTIFIER # 7	1725	c	30	13	1725		14	30			RECTIFIER # 10 / SPARE
	1725	c		15		1725	16				
RECTIFIER # 8 / SPARE			30	17	0		18	30			RECTIFIER # 11 / SPARE
				19		0	20				
RECTIFIER # 9 / SPARE			30	21	0		22	30			RECTIFIER # 12 / SPARE
				23		0	24				
HVAC	2122	c	25	25	2482		26	20	nc	360	EXTERIOR LIGHT
	2122	c		27		2482	28	20	nc	360	DUPLEX RECPT
GFCI	180	nc	20	29	360		30	20	c	180	GENERATOR BLOCK HTR
PHASE TOTALS (VA):					14917	14557					
CURRENT PER PHASE (A):					154	151	Amperes/phase cannot exceed main breaker rating				
PANEL TOTAL (VA):					29474		Legend: c = continuous, nc = non-continuous				

PANEL CAPACITY (kVA):	48.0	CONNECTED LOAD (kVA):	29.5
PANEL LOADING (100% non-cont. load) (kVA):	0.9		
PANEL LOADING (125% continuous load) (kVA):	35.7		
PANEL LOADING (TOTAL) (kVA):	36.6		
SPARE CAPACITY (kVA):	11.4		

3 PANEL SCHEDULE
N.T.S.

SHORT CIRCUIT CALCULATIONS BASED UPON POINT METHOD AS ILLUSTRATED IN BUSSMAN PUBLICATION SPD-90.
FAULT VALUES SHOWN ARE FOR LINE-TO-LINE FAULT @ 240 VAC

FAULT CURRENT AT TRANSFORMER SECONDARY PER LOCAL POWER COMPANY

$I_{SC1} = V_{P-UT}/V_{S-UT} \times M_{UT} \times I_{SCP-UT} = 12175\ A$

$f_1 = \frac{2 \times L \times I_{SC1(L-L)}}{C_1 \times n \times V_{L-L}} = \frac{2 \times 10 \times 12175}{22737 \times 1 \times 240} = 0.0446$

$M_1 = \frac{1}{1 + f_1} = \frac{1}{1 + 0.0446} = 0.9573$

FAULT CURRENT AT METER BANK

$I_{SC2} = M_1 \times I_{SC1} = 0.957 \times 12175 = 11652\ A$

$f_2 = \frac{2 \times L \times I_{SC2(L-L)}}{C_2 \times n \times V_{L-L}} = \frac{2 \times 3 \times 11652}{36500 \times 240} = 0.0080$

$M_2 = \frac{1}{1 + f_2} = \frac{1}{1 + 0.0080} = 0.9921$

FAULT CURRENT AT METER BANK BUSBAR

$I_{SC3} = M_2 \times I_{SC2} = 0.9921 \times 11652 = 11560\ A$

$f_3 = \frac{2 \times L \times I_{SC3(L-L)}}{C_3 \times n \times V_{L-L}} = \frac{2 \times 50 \times 11560}{13923 \times 1 \times 240} = 0.3460$

$M_3 = \frac{1}{1 + f_3} = \frac{1}{1 + 0.3460} = 0.7429$

FAULT CURRENT AT PANEL 'ATT'

$I_{SC4} = M_3 \times I_{SC3} = 0.7429 \times 11560 = 8588\ A$

1 FAULT CALCULATIONS
N.T.S.

SITE TYPE: MONOPOLE/WIC

AT&T Site ID:
COL02568
6915 SPACE VILLAGE AVENUE
COLORADO SPRINGS, CO 80915

Tower Owner:
CROWN CASTLE
2055 SOUTH STEARMAN DRIVE
CHANDLER, AZ 85286

PREPARED FOR:
at&t Mobility
161 Inverness Drive West 2nd floor
Englewood, Colorado 80112

A&E:
TELCYTE INFRASTRUCTURE SERVICES
3450 N HIGLEY RD - SUITE 102,
MESA, AZ 85215

AT&T SITE NO:	COL02568
BU NO:	823722
DRAWN BY:	AK
CHECKED BY:	CM

REV	DATE	DESCRIPTION
A	2/25/22	PRELIMINARY CD'S
B	03/21/22	CLIENT REVISIONS
C	5/19/22	CLIENT REVISIONS

Licensor:
COLORADO LICENSED
TIM ALEXANDER
44563
EXP 10/31/2023
PROFESSIONAL ENGINEER
SIGNED, 19 MAY 2022

Issued For:
5/19/22
PRELIMINARY CD'S

SHEET TITLE:
POWER ONE-LINE DIAGRAM

SHEET NUMBER:
E-3

GENERAL NOTES:

1. ALL ELECTRICAL WORK SHALL BE COMPLETED IN ACCORDANCE WITH THE LATEST EDITION OF THE NATIONAL ELECTRICAL CODE.
2. COMPLY WITH THE LATEST EDITION OF THE UNIFORM BUILDING CODE, THE REQUIREMENTS OF ALL APPLICABLE MUNICIPAL AND STATE CODES AND REGULATIONS, AND UTILITY GUIDELINES.
3. PERFORM ALL VERIFICATION, OBSERVATIONS, TESTING AND EXAMINATION OF WORK PRIOR TO THE ORDERING OF ELECTRICAL EQUIPMENT AND THE ACTUAL CONSTRUCTION. ISSUE A WRITTEN NOTICE OF ALL FINDINGS TO THE CONSTRUCTION MANAGER LISTING ALL MALFUNCTIONS, FAULTY EQUIPMENT AND DISCREPANCIES.
4. UNDERGROUND CONDUIT SHALL BE RIGID POLYVINYL CHLORIDE CONDUIT: TYPE SCHEDULE 40 (OVERHEAD CONDUIT SHALL BE GALVANIZED RIGID CONDUIT–GRC) CONFORMING TO UL ARTICLE 651: WESTERN PLASTICS OR CARBON MANUFACTURER. COUPLINGS SHALL BE SLIP–ON SOLVENT SEALED T PIPE: SOLVENT, WESTERN TYPE COMPATIBLE WITH PVC DUCT, ALL BENDS SHALL BE 30" MINIMUM RADIUS.
5. ALL WIRING SHALL BE STRANDED COPPER WITH MINIMUM 600V INSULATION (UNLESS OTHERWISE NOTED).
6. NEUTRAL SHALL BE COLOR CODED, INSULATION SHALL BE CROSS–LINKED POLYETHYLENE.
7. CONTRACTOR TO CONTACT ALL UTILITIES FOR LOCATION OF UNDERGROUND SERVICES. SERVICE LOCATIONS TO BE CONFIRMED PRIOR TO CONSTRUCTION.
8. THE CONTRACTOR IS RESPONSIBLE FOR ALL PERMITTING, FILING, AND FEES IN CONJUNCTION WITH THE PROJECT.
9. THE CONTRACTOR SHALL SCHEDULE ALL NECESSARY INSPECTIONS WITH THE PROPER AUTHORITIES AND INFORM CONSTRUCTION MANAGER 24–HOURS IN ADVANCE. ALL TICKETS AND INSPECTION VERIFICATIONS WILL BE SUBMITTED TO THE OWNER'S REPRESENTATIVE WITHIN 24–HOURS AFTER THE INSPECTION HAS TAKEN PLACE.
10. ALL EQUIPMENT, WIRING, AND MATERIALS MUST HAVE A UL LABEL.
11. ALL WORK SHALL BE DONE BY QUALIFIED AND EXPERIENCED JOURNEYMEN AND PERFORMED IN A WORKMANLIKE MANNER AND SHALL PROCEED IN AN ORDERLY MANNER SO AS NOT TO HOLD UP THE PROGRESS OF THE PROJECT.
12. THOROUGHLY TEST ALL LINES FEEDERS, EQUIPMENT, AND DEVICES WITH MAXIMUM LOADS TO ASSURE PROPER OPERATION.
13. CONDUCTOR LENGTHS SHALL BE CONTINUOUS FROM TERMINATION TO TERMINATION WITHOUT SPLICES.
14. PROVIDE PULL BOXES WHERE SHOWN AND/OR WHERE REQUIRED BY CODES AND/OR UTILITY COMPANIES.
15. ALL CONDUIT ROUGH–IN SHALL BE COORDINATED WITH THE MECHANICAL EQUIPMENT TO AVOID LOCATION CONFLICTS, CONTRACTOR SHALL VERIFY ALL LOCATIONS.
16. ALL WIRES SHALL BE TAGGED AT ALL PULL BOXES, J–BOXES, EQUIPMENT BOXES, AND CABINETS WITH APPROVED PLASTIC TAGS.
17. ALL BREAKERS IN PANEL BOXES SHALL BE IDENTIFIED WITH TYPE WRITTEN LABELS NEATLY PLACED ALONG SIDE OF THE BREAKER.
18. ALL FIRE–RATED WALL AND FLOOR PENETRATIONS ARE TO BE CAULKED AND SEALED WITH A FIRE RESISTANT CAULKING TO MAINTAIN THE INTEGRITY OF THE FIRE SEPARATION.
19. UTILIZE SONNEBORN TYPE NP–1 CAULKING FOR SEALING ALL EXTERIOR WALL PENETRATIONS.

3 NOTES
N.T.S.

5 BATTERY ROOM SIGN DETAIL
N.T.S.

MARATHON M12V180FT

DESIGNED FOR DURABILITY IN TELECOMMUNICATIONS, AND ELECTRIC UTILITY APPLICATIONS, THE GNB FRONT TERMINAL MARATHON SERIES PROVIDES HIGH PERFORMANCE AND RELIABILITY IN LONG DURATION DISCHARGE APPLICATIONS. THE LOCATION OF THE TERMINALS ON THE FRONT (VS THE TOP) OF THE BATTERY GREATLY FACILITATES THE INSTALLATION AND MAINTENANCE OF THE PRODUCT WHEN PLACED IN A CABINET ENCLOSURE OR ON A STANDARD RELAY RACK TRAY. THE MARATHON FRONT TERMINAL BATTERY SERIES HIGHLIGHTS ANOTHER EXAMPLE OF GNB'S EXTENSIVE EXPERIENCE AND WORLD WIDE LEADERSHIP IN VRLA TECHNOLOGY.

"DESIGNED IN" QUALITY MANUFACTURING

QUALITY MANUFACTURING PROCESSES FOR THE MARATHON SERIES BATTERIES INCORPORATE THE INDUSTRY'S MOST ADVANCED TECHNOLOGIES INCLUDING: AN AUTOMATED HELIUM LEAK DETACTION SYSTEM, A COMPUTERED WATER BATH FORMATION PROCESS. EACH AND EVERY UNIT IS CAPACITY TESTED.

HIGH PERFORMANCE MARATHON SERIES FEATURES:

- FLAME–RETARDANT REINFORCED CONTAINER AND COVER COMPLIANT WITH UL94 V–0, 28% L.O.I.
- INTEGRATED FLASH ARRESTER ULTRASONICALLY WELDED INTO COVER.
- PATENTED "DIAMOND SIDE–WALL" DESIGN TO MAINTAIN STRUCTURAL INTEGRITY IN HIGHER OPERATING TEMPERATURES
- HEAT SEALED CASE–TO–COVER BOND TO ENSURE A LEAK PROOF SEAL
- HIGH–COMPRESSION ABSORBENT GLASS MAT (AGM) TECHNOLOGY FOR GREATER THAN 99% RECOMBINATION EFFICIENCY
- HIGH–TIN, CALCIUM, SILVER, LEAD POSITIVE PLATE DESIGN FOR MAXIMUM SERVICE FLOAT LIFE; 10 YEAR DESIGN LIFE @ 25°C (77øF)
- FRONT ACCESSIBLE COPPER ALLOY TERMINALS & "EASY ON/EASY OFF" POST PROTECTOR
- RELIABLE ONE–WAY, SELF–RESEALING SAFETY VENTS
- INTEGRATED CARRY HANDLES
- MULTICELL DESIGN FOR FASTER INSTALLATION AND REDUCED MAINTENANCE

APPLICATIONS:

MARATHON SERIES BATTERIES IN CORPORATE GNB'S ADVANCED VRLA TECHNOLOGY DESIGNED FOR LONG LIFE AND HIGH PERFORMANCE IN:

TELECOMMUNICATIONS

- DISTRIBUTED POWER
- PCS
- CELLULAR
- BROADBAND

ELECTRIC UTILITY

- SWITCHGEAR CONTROL POWER
- COMMUNICATIONS

2 MARATHON M12V180FT DETAILS
N.T.S.

MARATHON M12V180FT RECOMBINANT VALVE REGULATED LEAD ACID (VLRA) BATTERIES (INDOOR)

REQUIREMENT (OFC 608.1)	CODE REFERENCE	COMMENTS
SAFETY CAP	OFC 608.2.2	SAFETY VENT - 400 mb (6 psi) NOMINAL, SELF RESEALING (PATENTED).
THERMAL RUNAWAY MANAGEMENT	OFC 608.3	FLOAT VOLTAGE = 2.23 TO 2.27 VPC (2.25 RECOMMENDED) @ 25°C (77°F). POWER CABINET TO INCLUDE EMERSON SM-TEMP TEMPERATURE CONCENTRATOR PN 547490 OR EQUIVALENT AND BE CONNECTED TO BATTERY STRINGS BY TEMPERATURE PROBES (PN 556155 OR PN 552992). THIS UNIT IS TO PRECLUDE, DETECT, AND CONTROL THERMAL RUNAWAY IN ACCORDANCE WITH OFC 608.3 BY AUTOMATICALLY INCREASING OR DECREASING OUTPUT VOLTAGE AS BATTERY TEMPERATURE DECREASES OR INCREASES, RESPECTIVELY.
SPILL CONTROL	OFC 608.5.1	M12V180FT IS A VRLA SEALED BATTERY WITH IMMOBILIZED ELECTROLYTE. NO SPILL CONTROL MEASURES ARE REQUIRED.
NEUTRALIZATION	OFC 608.5.1	NEUTRALIZATION IS CONTAINED USING THE ENVIRONGUARD® HAWK SPILL CONTAINMENT SYSTEM UTILIZING UL RECOGNISED, CORROSIVE RESISTANT LINER W/ CLASS 1 FIRE RATING (NFPA101)
VENTILATION	OFC 608.6.1, 608.6.2	CONTINUOUS VENTILATION SHALL BE PROVIDED AT A RATE OF NO LESS THAN 1 CF/MIN PER SQ. FT. ENVIRONMENTAL CONTROLS HAVE BEEN SHOWN TO MEET CODE REQUIREMENTS. SEPARATE MECHANICAL PERMIT TO BE OBTAINED FOR VENTILATION SYSTEM.
SIGNAGE	OFC 608.7	CODE REQUIRED BATTERY ROOM SIGNAGE TO BE SHALL BE CLEARLY POSTED IN ALL BATTERY AREAS.
SEISMIC PROTECTION	OFC 608.8	MEETS I.B.C. SEISMIC ZONE IV REQUIREMENTS. SEISMIC ANCHORAGE CALCULATIONS BY VENDOR – DATED
SMOKE DETECTION	OFC608.9	INDOOR EQUIPMENT ROOMS ARE EQUIPPED WITH SUITABLE SMOKE DETECTION DEVICES. HYDROGEN AND SMOKE ALARMS MONITORED BY A 24-HOUR OFF-SITE AT&T DEPARTMENT. SEPARATE PERMITS SHALL BE OBTAINED FROM FIRE MARSHALL OFFICE FOR FIRE ALARM MODIFICATION AS REQUIRED.
MECHANICAL VENTALATION WITH EMERGENCY STANDBY POWER	OFC 5004.7	INSTALL 24" WIDE x 12" HIGH WEATHER PROOF COMBINATION DISCHARGE LOUVER/DAMPER WITH 24V DC MOTORIZED DAMPER ACTUATOR. DESIGN BASED ON RUSKIN MODEL ELC6375DAX OR APPROVED EQUAL. DAMPER SHALL FAIL OPEN UPON LOSS OF POWER. SEPARATE MECHANICAL PERMIT TO BE OBTAINED FOR VENTILATION SYSTEM.
HYDROGEN ALARM AND SUPERVISION	OFC 608.6.3	HYDROGEN GAS DECTECTOR MOUNTED NEAR OR ON CEILING. DETECTOR SHALL BE TWO-STAGE. WHEN AIR SURROUNDING DECTECTOR REACHES 1% HYDROGEN BY VOLUME, EXHAUST FAN SHALL ACTIVATE, AND YELLOW CAUTION LIGHT SHALL TURN ON. WHEN AIR SURROUNDING DECTECTOR REACHES 2% HYDROGEN BY VOLUME, RED WARNING LIGHT WILL FLASH AND 80 dB ALARM WILL SOUND. HYDROGEN AND SMOKE ALARMS MONITORED BY A 24-HOUR OFF-SITE AT&T DEPARTMENT. SEPARATE PERMITS SHALL BE OBTAINED FROM FIRE MARSHALL OFFICE FOR FIRE ALARM MODIFICATION AS REQUIRED.

4 MARATHON M12V180FT CODE REQUIREMENTS
N.T.S.

MARATHON FRONT TERMINAL SPECIFICATIONS

MODEL NUMBER	VOLTAGE	CAPACITY (AH)		NOMINAL DIMENSIONS						NOMINAL WEIGHT	
				INCHES			MILLIMETERS				
		8 HR TO 1.75 VPC @ 25°	10 HR TO 1.8 VPC @ 20°	A	B	C	A	B	C	LBS	Kg
M12V180FT	12	180	175	22.00	4.90	12.50	559	124	318	133	60

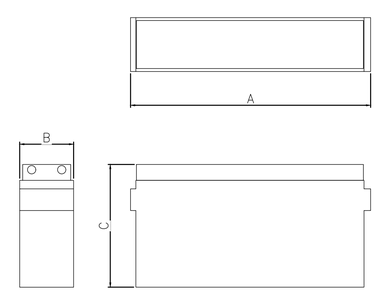

ORTHOGRAPHIC VIEWS

MARATHON FRONT TERMINAL ELECTRICAL DATA

MODEL NUMBER	SHORT CIRCUIT CURRENT	INTERNAL RESISTANCE (mOhms)
M12V180FT	4147	3.0

FLOAT VOLTAGE & CHARGING

CONSTANT VOLTAGE CHARGING IS RECOMMENDED

RECOMMENDED FLOAT VOLTAGE: 2.27 VPC
@ 25°C (77°F)

FLOAT VOLTAGE RANGE:2.25 TO 2.30 VPC
@ 25°C (77°F)

EQUALIZE VOLTAGE: 2.35 VPC
FOR 24 HOURS

1 MARATHON M12V180FT DETAILS
N.T.S.

AT&T Site ID:
COL02568
6915 SPACE VILLAGE AVENUE
COLORADO SPRINGS, CO 80915

Tower Owner:
CROWN CASTLE
2055 SOUTH STEARMAN DRIVE
CHANDLER, AZ 85286

PREPARED FOR:
at&t Mobility
161 Inverness Drive West 2nd floor
Englewood, Colorado 80112

A&E:
TELCYTE INFRASTRUCTURE SERVICES
3450 N HIGLEY RD - SUITE 102,
MESA, AZ 85215

AT&T SITE NO:	COL02568
BU NO:	823722
DRAWN BY:	AK
CHECKED BY:	CM

REV	DATE	DESCRIPTION
A	2/25/22	PRELIMINARY CD'S
B	03/21/22	CLIENT REVISIONS
C	5/19/22	CLIENT REVISIONS

Licensor:
COLORADO LICENSED
TIM ALEXANDER
44563
EXP 10/31/2023
PROFESSIONAL ENGINEER
SIGNED, 19 MAY 2022

Issued For:
5/19/22
PRELIMINARY CD'S

SHEET TITLE:
BATTERY DETAILS & SPECIFICATIONS

SHEET NUMBER:
E-4

CIRCUIT SCHEDULE	
1	-48VDC 50A CIRCUIT (8-AWG)
2	-48VDC 50A CIRCUIT (8-AWG)
3	3 PAIR #8-AWG DC TRUNK CABLE
4	#8-AWG DC JUMPER
5	18 PAIR FIBER OPTIC TRUNK CABLE
6	FIBER OPTIC JUMPER CABLE

NOTES:

1. REFER TO FINAL RFDS FOR RF DESIGN AND PLUMBING.
2. REFER TO FINAL RFDS FOR FINAL RADIO HEAD COUNT.
3. REFER TO EQUIPMENT LAYOUT FOR RACK LOCATION.
4. WIRE LENGTH NOT TO EXCEED 15' FROM SURGE SUPPRESSOR TO RRH.
5. RRH & SQUID DESIGN TYPICAL PER SECTOR.
6. ROUTE TO THE NEAREST GROUND BAR TYP.
7. DAISY CHAIN RRHs ONLY WHEN REQUIRED BY SPECTRUM CONSTRAINTS.

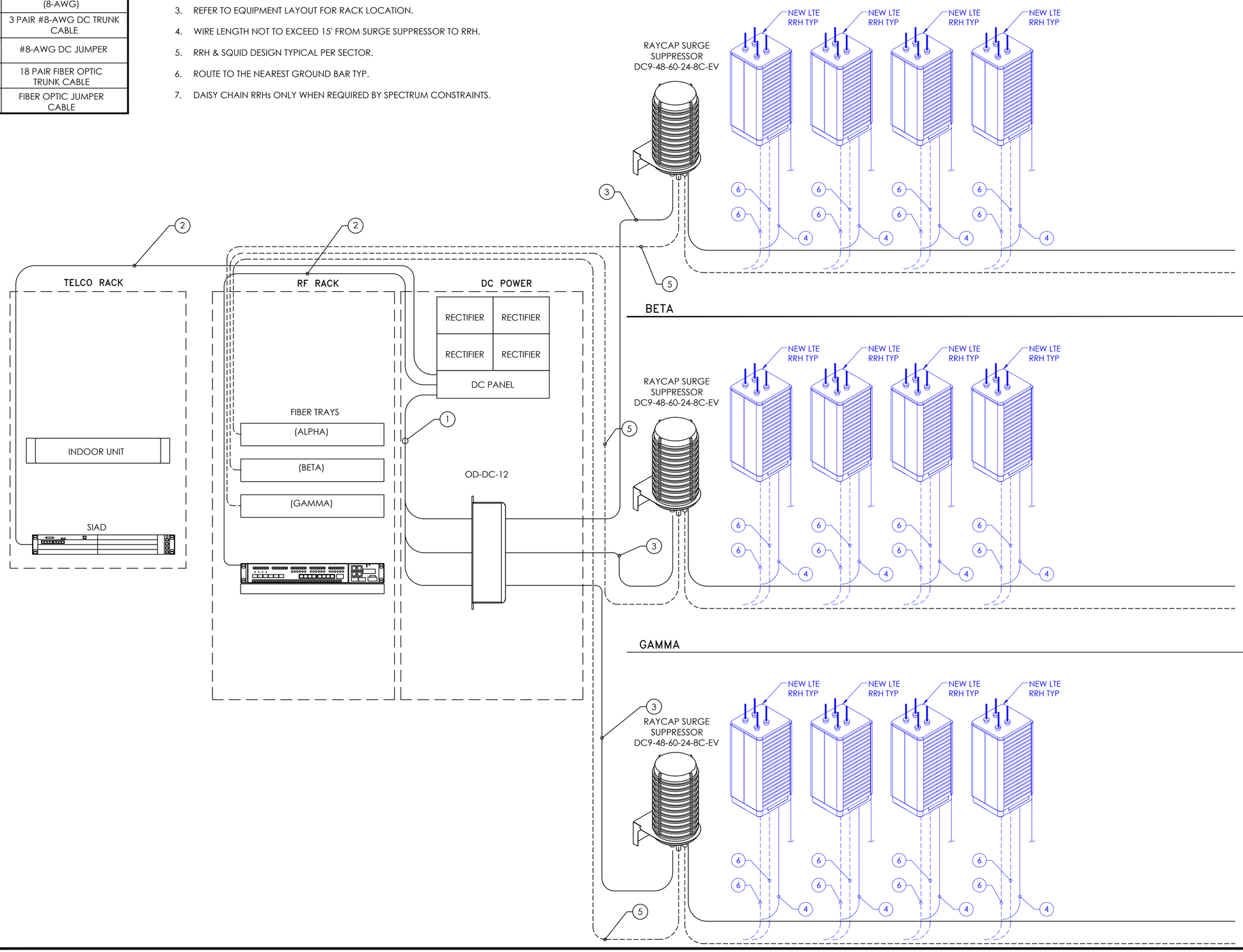

AT&T Site ID:
COL02568
6915 SPACE VILLAGE AVENUE
COLORADO SPRINGS, CO 80915

Tower Owner:
CROWN CASTLE
2055 SOUTH STEARMAN DRIVE
CHANDLER, AZ 85286

PREPARED FOR:
at&t Mobility
161 Inverness Drive West 2nd floor
Englewood, Colorado 80112

A&E:
TELCYTE INFRASTRUCTURE SERVICES
3450 N HIGLEY RD - SUITE 102,
MESA, AZ 85215

AT&T SITE NO:	COL02568
BU NO:	823722
DRAWN BY:	AK
CHECKED BY:	CM

REV	DATE	DESCRIPTION
A	2/25/22	PRELIMINARY CD'S
B	03/21/22	CLIENT REVISIONS
C	5/19/22	CLIENT REVISIONS

Licensor:
COLORADO LICENSED
TIM ALEXANDER
44563
EXP
10/31/2023
PROFESSIONAL ENGINEER
SIGNED, 19 MAY 2022

Issued For:
5/19/22
PRELIMINARY CD'S

SHEET TITLE:
ELECTRICAL DC & FIBER CABLE DIAGRAM

SHEET NUMBER:
E-5

SYMBOL	DESCRIPTION
⊗	COPPER GROUND ROD
⊠	TEST WELL
◬	CADWELD CONNECTION
▬	GROUND BAR
▨	MECHANICAL CONNECTION
	FIELD VERIFY & TIE INTO EXISTING GROUNDING SYSTEM

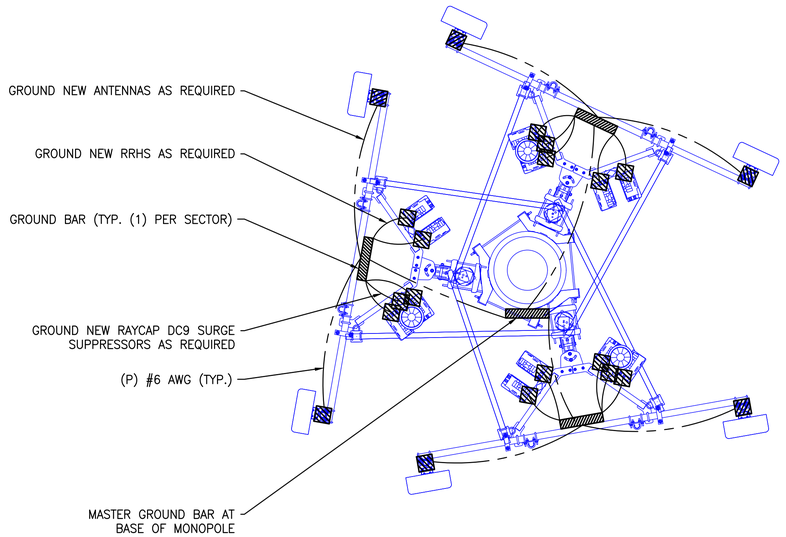

1 ANTENNA GROUNDING PLAN

SCALE: 2' 1' 0 2' 3/8"=1'-0" (FULL SIZE) 3/16"=1'-0" (11x17)

N

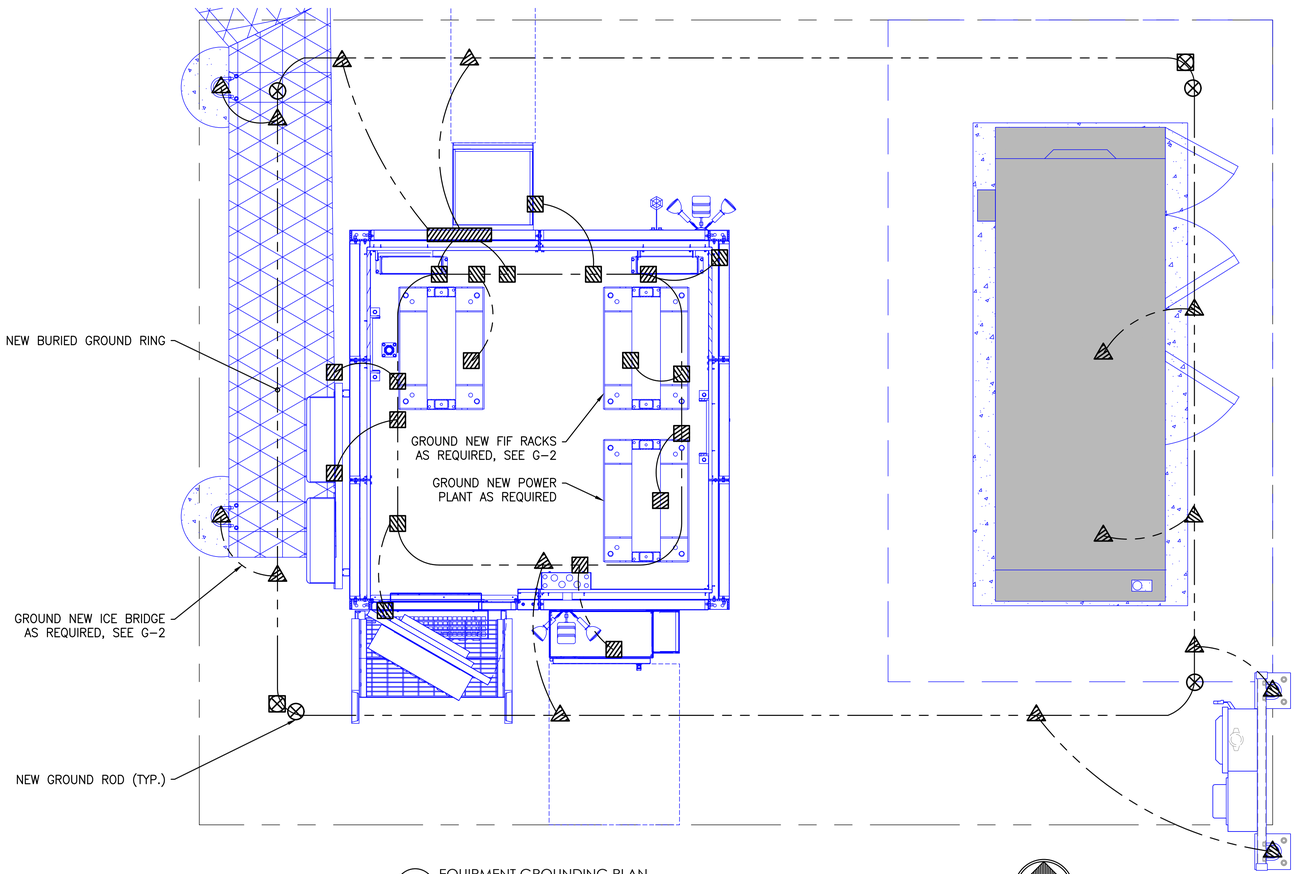

1 EQUIPMENT GROUNDING PLAN

SCALE: 1' 6" 0 1' 3/4"=1'-0" (FULL SIZE) 3/8"=1'-0" (11x17)

N

SITE TYPE: MONOPOLE/WIC

GENERAL GROUNDING NOTES:

1. GROUNDING SHALL BE INSTALLED 6" BELOW FROST DEPTH OR 30" BELOW GRADE, WHICHEVER IS GREATER. CONFIRM FROST DEPTH WITH JURISDICTION.
2. ALL DETAILS ARE SHOWN IN GENERAL TERMS. ACTUAL INSTALLATION AND CONSTRUCTION MAY VARY DUE TO SITE SPECIFIC CONDITIONS.
3. GROUND ALL ANTENNA BASES, FRAMES, CABLE RUNS, AND OTHER METALLIC COMPONENTS USING GROUND WIRES AND CONNECT TO SURFACE MOUNTED BUS BARS. FOLLOW ANTENNA AND BTS MANUFACTURERS PRACTICES FOR GROUNDING REQUIREMENTS. GROUND COAX SHIELD AT BOTH ENDS AND EXIT FROM TOWER OR POLE USING MFR'S PRACTICES.
4. ALL GROUND CONNECTIONS SHALL BE CADWELD. ALL WIRES SHALL BE COPPER THHN/THWN. ALL GROUND WIRE SHALL BE GREEN INSULATED WIRE ABOVE GROUND.
5. CONTRACTOR TO VERIFY AND TEST GROUND TO SOURCE. GROUNDING AND OTHER OPERATIONAL TESTING WILL BE WITNESSED BY AT&T REPRESENTATIVE.
6. ELECTRICAL CONTRACTOR TO PROVIDE DETAILED DESIGN OF GROUNDING SYSTEM, AND RECEIVE APPROVAL OF DESIGN BY AUTHORIZED AT&T MOBILITY REPRESENTATIVE, PRIOR TO INSTALLATION OF GROUNDING SYSTEM. PHOTO DOCUMENT ALL CADWELDS AND GROUND RING
7. NOTIFY CONSTRUCTION MANAGER IF THERE ARE ANY DIFFICULTIES INSTALLING GROUNDING SYSTEM DUE TO SITE SOIL CONDITIONS.

GENERAL ROD NOTES (WHERE APPLICABLE):

1. ELECTRICAL CONTRACTOR SHALL ORDER GROUND RESISTANCE TESTING ONCE THE GROUND SYSTEM HAS BEEN INSTALLED; A QUALIFIED INDIVIDUAL, UTILIZING THE FALL OF POTENTIAL METHOD, SHOULD PERFORM THE TEST. THE REPORT WILL SHOW THE LOCATION OF THE TEST AND CONTAIN NO LESS THAN 9 TEST POINTS ALONG THE TESTING LINE, GRAPHED OUT TO SHOW THE PLATEAU.
2. 2 POINT GROUND TEST OR 3 POINT 62% TESTS WILL NOT BE ACCEPTED AS ALTERNATIVES TO THE AFOREMENTIONED GROUND TESTS. TEST SHALL BE PERFORMED WHILE THE COUNTERPOISE IS ISOLATED FROM THE A/C SYSTEM GRIDS AND EXISTING COMMUNICATIONS FACILITY.

AT&T Site ID:
COL02568
6915 SPACE VILLAGE AVENUE
COLORADO SPRINGS, CO 80915

Tower Owner:
CROWN CASTLE
2055 SOUTH STEARMAN DRIVE
CHANDLER, AZ 85286

PREPARED FOR:
at&t Mobility
161 Inverness Drive West 2nd floor
Englewood, Colorado 80112

A&E:
TELCYTE INFRASTRUCTURE SERVICES
3450 N HIGLEY RD - SUITE 102,
MESA, AZ 85215

AT&T SITE NO:	COL02568
BU NO:	823722
DRAWN BY:	AK
CHECKED BY:	CM

REV	DATE	DESCRIPTION
A	2/25/22	PRELIMINARY CD'S
B	03/21/22	CLIENT REVISIONS
C	5/19/22	CLIENT REVISIONS

Licensor:
COLORADO LICENSED
TIM ALEXANDER
44563
EXP
10/31/2023
PROFESSIONAL ENGINEER
SIGNED, 19 MAY 2022

Issued For:
5/19/22
PRELIMINARY CD'S

SHEET TITLE:
GROUNDING PLAN, NOTES & DETAILS

SHEET NUMBER:
G-1

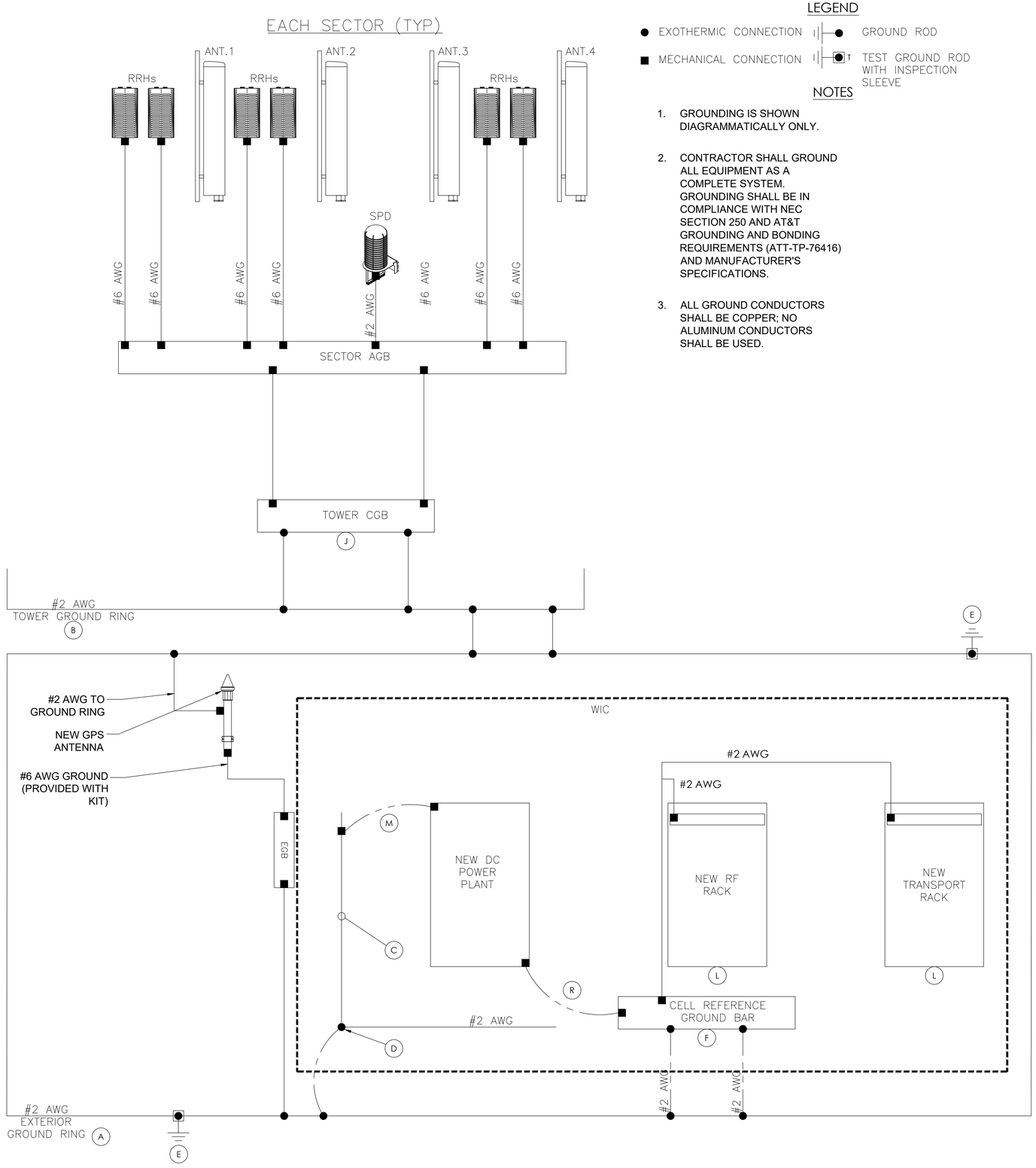

1 TYPICAL GROUNDING SCHEMATIC
1/2"=1'-0"

LEGEND

- ● EXOTHERMIC CONNECTION
- ■ MECHANICAL CONNECTION
- GROUND ROD
- TEST GROUND ROD WITH INSPECTION SLEEVE

NOTES

1. GROUNDING IS SHOWN DIAGRAMMATICALLY ONLY.
2. CONTRACTOR SHALL GROUND ALL EQUIPMENT AS A COMPLETE SYSTEM. GROUNDING SHALL BE IN COMPLIANCE WITH NEC SECTION 250 AND AT&T GROUNDING AND BONDING REQUIREMENTS (ATT-TP-76416) AND MANUFACTURER'S SPECIFICATIONS.
3. ALL GROUND CONDUCTORS SHALL BE COPPER; NO ALUMINUM CONDUCTORS SHALL BE USED.

(A) EXTERIOR GROUND RING: #2 AWG SOLID COPPER, BURIED AT A DEPTH OF AT LEAST 30 INCHES BELOW GRADE, OR 6 INCHES BELOW THE FROST LINE AND APPROXIMATELY 24 INCHES FROM THE EXTERIOR WALL OR FOOTING. (ATT-TP-76416 2.2.3.5/7.5.1)

(B) TOWER GROUND RING: THE GROUND RING SYSTEM SHALL BE INSTALLED AROUND AN ANTENNA TOWER'S LEGS, AND/OR GUY ANCHORS. WHERE SEPARATE SYSTEMS HAVE BEEN PROVIDED FOR THE TOWER AND THE BUILDING, AT LEAST TWO BONDS SHALL BE MADE BETWEEN THE TOWER RING GROUND SYSTEM AND THE BUILDING RING GROUND SYSTEM USING MINIMUM #2 AWG SOLID COPPER CONDUCTORS. (ATT-TP-76416 7.5.1)

(C) INTERIOR GROUND RING: #2 AWG STRANDED GREEN INSULATED COPPER CONDUCTOR EXTENDED AROUND THE PERIMETER OF THE EQUIPMENT AREA. ALL NON-TELECOMMUNICATIONS RELATED METALLIC OBJECTS FOUND WITHIN A SITE SHALL BE GROUNDED TO THE INTERIOR GROUND RING WITH #6 AWG STRANDED GREEN INSULATED CONDUCTOR. (ATT-TP-76416 7.6.4)

(D) BOND TO INTERIOR GROUND RING: #2 AWG SOLID TINNED COPPER WIRE PRIMARY BONDS SHALL BE PROVIDED AT LEAST AT FOUR POINTS ON THE INTERIOR GROUND RING, LOCATED AT THE CORNERS OF THE BUILDING. (ATT-TP-76416 7.5.2.2)

(E) GROUND ROD: UL LISTED COPPER CLAD STEEL. MINIMUM 5/8" DIAMETER BY EIGHT FEET LONG. ALL GROUND RODS MAY BE INSTALLED WITH INSPECTION SLEEVES. GROUND RODS SHALL BE DRIVEN TO THE DEPTH OF GROUND RING CONDUCTOR. (ATT-TP-76416 1.4 / 2.2.3.10)

(F) CELL REFERENCE GROUND BAR: POINT OF GROUND REFERENCE FOR ALL COMMUNICATIONS EQUIPMENT FRAMES. ALL BONDS ARE MADE WITH #2 AWG STRANDED GREEN INSULATED COPPER CONDUCTORS. BOND TO GROUND RING WITH (2) #2 SOLID TINNED COPPER CONDUCTORS. (ATT-TP-76416 7.6.7)

(G) HATCH PLATE GROUND BAR: BOND TO THE INTERIOR GROUND RING WITH TWO #2 AWG STRANDED GREEN INSULATED COPPER CONDUCTORS. WHEN A HATCH-PLATE AND A CELL REFERENCE GROUND BAR ARE BOTH PRESENT, THE CRGB MUST BE CONNECTED TO THE HATCH-PLATE AND TO THE INTERIOR GROUND RING USING TWO #2 AWG STRANDED GREEN INSULATED COPPER CONDUCTORS.

(H) EXTERIOR CABLE ENTRY PORT GROUND BARS: LOCATED AT THE ENTRANCE TO THE CELL SITE BUILDING. BOND TO GROUND RING WITH A #2 AWG SOLID TINNED COPPER CONDUCTORS WITH AN EXOTHERMIC WELD AND INSPECTION SLEEVE. (ATT-TP-76416 7.6.7.2)

(J) TOWER EXIT GROUND BAR: #2 AWG SOLID TINNED COPPER BOND TO THE TOWER GROUND RING. (ATT-TP-76416 7.5.5)

(K) TELCO GROUND BAR: BOND TO BOTH CELL REFERENCE GROUND BAR AND EXTERIOR GROUND RING. (ATT-TP-76416 7.6.8)

(L) FRAME BONDING: THE BONDING POINT FOR TELECOM EQUIPMENT FRAMES SHALL BE THE GROUND BUS THAT IS NOT ISOLATED FROM THE EQUIPMENTS METAL FRAMEWORK. BOND THE FRAME GROUND BUS OR SUPPLEMENTARY CONDUCTOR TO THE "I" SECTION OF THE CELL REFERENCE GROUND BAR. (ATT-TP-76416 6.5.3 AND 7.8)

(M) INTERIOR UNIT BONDS: METAL FRAMES, CABINETS AND INDIVIDUAL METALLIC UNITS LOCATED WITH THE AREA OF THE INTERIOR GROUND RING REQUIRE A #6 AWG STRANDED GREEN INSULATED COPPER BOND TO THE INTERIOR GROUND RING. (ATT-TP-76416 7.12.3.1)

(N) FENCE AND GATE GROUNDING: METAL FENCES WITHIN 7 FEET OF THE EXTERIOR GROUND RING OR OBJECTS BONDED TO THE EXTERIOR GROUND RING SHALL BE BONDED TO THE GROUND RING WITH A #2 AWG SOLID TINNED COPPER CONDUCTOR AT AN INTERVAL NOT EXCEEDING 25 FEET. BONDS SHALL BE MADE AT EACH GATE POST AND ACROSS GATE OPENINGS. (ATT-TP-76416 7.12.2.2)

(P) EXTERIOR UNIT BONDS: METALLIC OBJECTS, EXTERNAL TO OR MOUNTED TO THE BUILDING, SHALL BE BONDED TO THE EXTERIOR GROUND RING. (ATT-TP-76416 7.12.2)

(Q) ICE BRIDGE SUPPORTS: EACH ICE BRIDGE LEG SHALL BE BONDED TO THE GROUND RING WITH #2 AWG BARE TINNED COPPER CONDUCTOR. PROVIDE EXOTHERMIC WELDS AT BOTH THE ICE BRIDGE LEG AND BURIED GROUND RING. (ATT-TP-76416 7.4.2.6)

(R) DURING ALL DC POWER SYSTEM CHANGES INCLUDING DC SYSTEM CHANGE OUTS, RECTIFIER REPLACEMENTS OR ADDITIONS, BREAKER DISTRIBUTION CHANGES, BATTERY ADDITIONS, BATTERY REPLACEMENTS AND INSTALLATIONS OR CHANGES TO DC CONVERTER SYSTEMS IT SHALL BE REQUIRED THAT SERVICES CONTRACTORS VERIFY ALL DC POWER SYSTEMS ARE EQUIPPED WITH A MASTER DC SYSTEM RETURN GROUND CONDUCTOR FROM THE DC POWER SYSTEM COMMON RETURN BUS DIRECTLY CONNECTED TO THE CELL SITE REFERENCE GROUND BAR (CRGB) PER TP76300 SECTION H 6 AND TP76416 FIGURE 7-11 REQUIREMENTS.

AT&T Site ID:
COL02568
6915 SPACE VILLAGE AVENUE
COLORADO SPRINGS, CO 80915

Tower Owner:
CROWN CASTLE
2055 SOUTH STEARMAN DRIVE
CHANDLER, AZ 85286

PREPARED FOR:
at&t Mobility
161 Inverness Drive West 2nd floor
Englewood, Colorado 80112

A&E:
TELCYTE INFRASTRUCTURE SERVICES
3450 N HIGLEY RD - SUITE 102,
MESA, AZ 85215

AT&T SITE NO:	COL02568
BU NO:	823722
DRAWN BY:	AK
CHECKED BY:	CM

REV	DATE	DESCRIPTION
A	2/25/22	PRELIMINARY CD'S
B	03/21/22	CLIENT REVISIONS
C	5/19/22	CLIENT REVISIONS

Licensor:
COLORADO LICENSED
TIM ALEXANDER
44563
EXP 10/31/2023
PROFESSIONAL ENGINEER
SIGNED, 19 MAY 2022

Issued For:
5/19/22
PRELIMINARY CD'S

SHEET TITLE:
GROUNDING DETAILS

SHEET NUMBER:
G-2

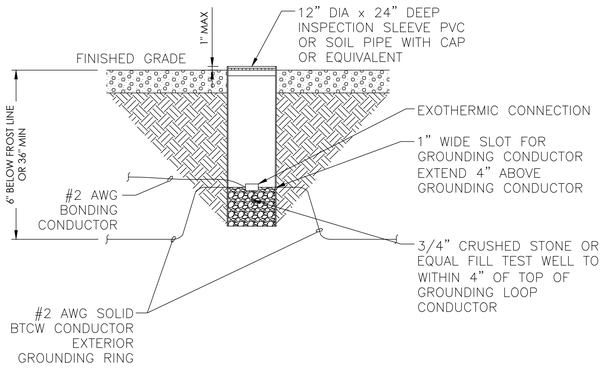

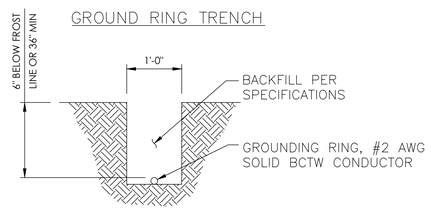

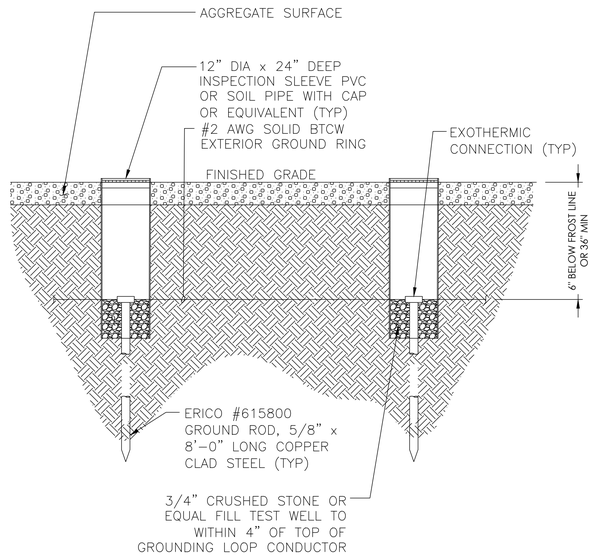

4 EXOTHERMIC WELD AND GROUND ROD WITH INSPECTION SLEEVE
N.T.S.

3 NOT USED
N.T.S.

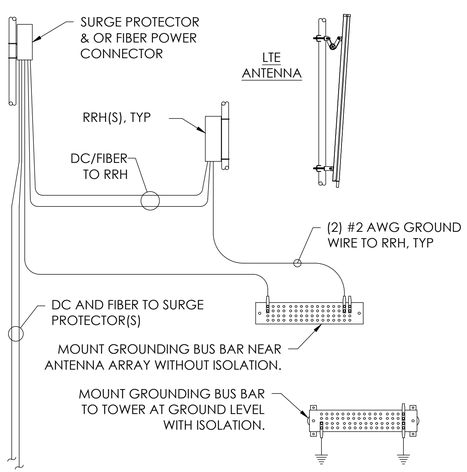

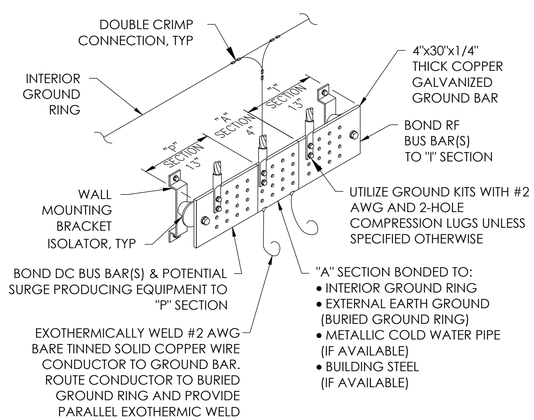

NOTE: COAT ALL MECHANICAL CONNECTIONS WITH "NO-OX" OR APPROVED.

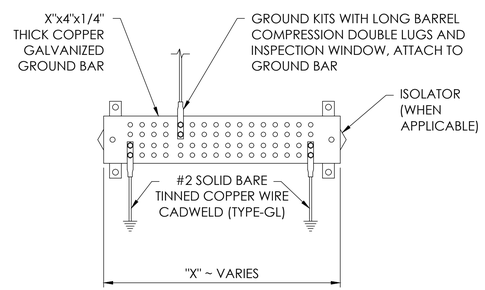

NOTE: COAT ALL MECHANICAL CONNECTIONS WITH "NO-OX" OR APPROVED.

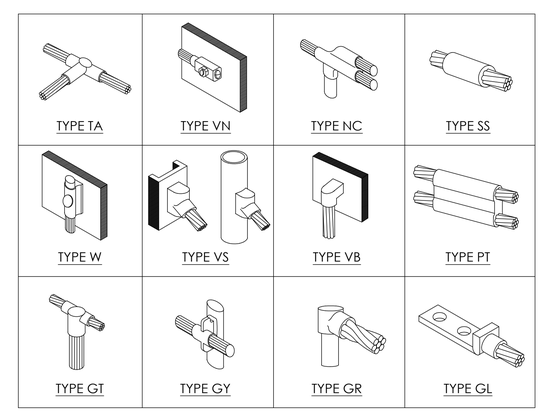

NOTE: CADWELD "TYPES" SHOWN ABOVE ARE EXAMPLES - CONSULT WITH PROJECT MANAGER FOR SPECIFIC TYPES OF CADWELDS TO BE USED.

2 GROUNDING DETAILS
N.T.S.

1 CAD WELD EXAMPLES
N.T.S.

AT&T Site ID:
COL02568
6915 SPACE VILLAGE AVENUE
COLORADO SPRINGS, CO 80915

Tower Owner:
CROWN CASTLE
2055 SOUTH STEARMAN DRIVE
CHANDLER, AZ 85286

PREPARED FOR:
at&t Mobility
161 Inverness Drive West 2nd floor
Englewood, Colorado 80112

A&E:
TELCYTE INFRASTRUCTURE SERVICES
3450 N HIGLEY RD - SUITE 102,
MESA, AZ 85215

AT&T SITE NO:	COL02568
BU NO:	823722
DRAWN BY:	AK
CHECKED BY:	CM

REV	DATE	DESCRIPTION
A	2/25/22	PRELIMINARY CD'S
B	03/21/22	CLIENT REVISIONS
C	5/19/22	CLIENT REVISIONS

Licensor:
COLORADO LICENSED
TIM ALEXANDER
44563
EXP 10/31/2023
PROFESSIONAL ENGINEER
SIGNED, 19 MAY 2022

IT IS A VIOLATION OF LAW FOR ANY PERSON, UNLESS THEY ARE ACTING UNDER THE DIRECTION OF A LICENSED PROFESSIONAL ENGINEER, TO ALTER THIS DOCUMENT.

Issued For:
5/19/22
PRELIMINARY CD'S

SHEET TITLE:
GROUNDING DETAILS

SHEET NUMBER:
G-3

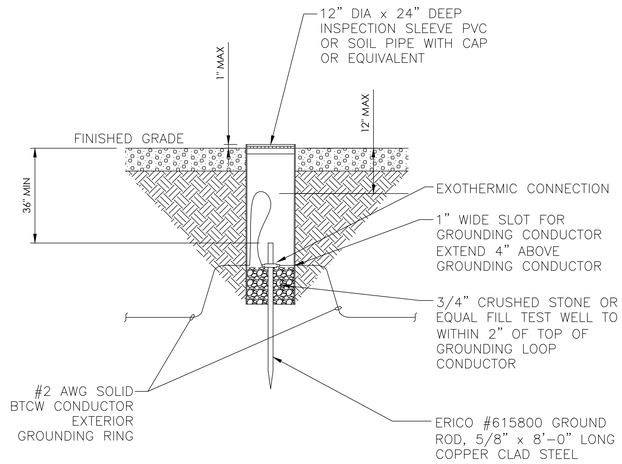

9 TEST GROUND ROD WITH INSPECTION SLEEVE
N.T.S.

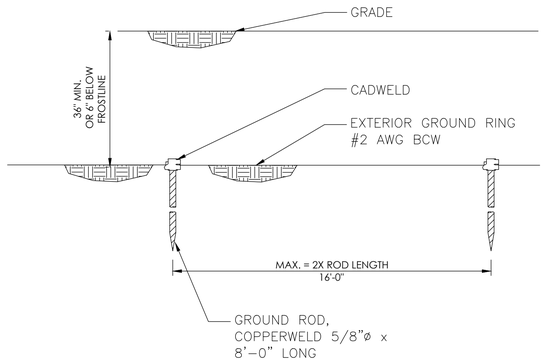

8 TYPICAL BURIED GROUND ROD
N.T.S.

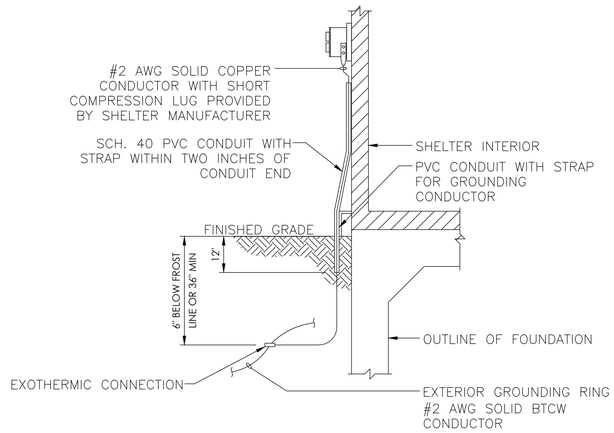

7 EXTERIOR RECEPTACLE GROUNDING
N.T.S.

6 NOT USED
N.T.S.

5 NOT USED
N.T.S.

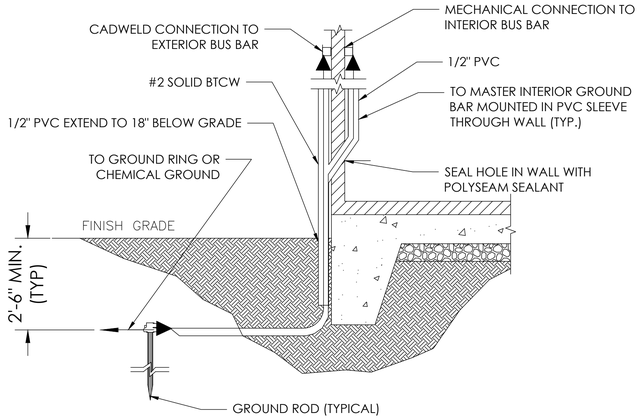

4 SHELTER GROUND DETAIL
N.T.S.

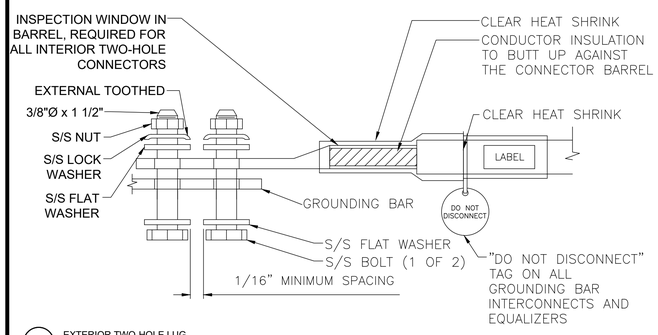

3 EXTERIOR TWO-HOLE LUG
N.T.S.

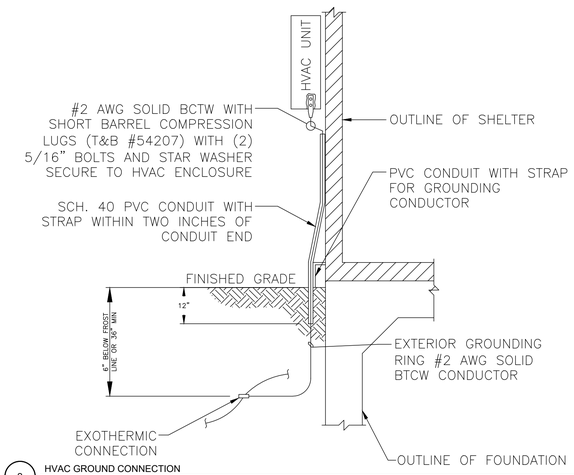

2 HVAC GROUND CONNECTION
N.T.S.

1 NOT USED
N.T.S.

AT&T Site ID:
COL02568
6915 SPACE VILLAGE AVENUE
COLORADO SPRINGS, CO 80915

Tower Owner:
CROWN CASTLE
2055 SOUTH STEARMAN DRIVE
CHANDLER, AZ 85286

PREPARED FOR:
at&t Mobility
161 Inverness Drive West 2nd floor
Englewood, Colorado 80112

A&E:
TELCYTE INFRASTRUCTURE SERVICES
3450 N HIGLEY RD - SUITE 102,
MESA, AZ 85215

AT&T SITE NO:	COL02568
BU NO:	823722
DRAWN BY:	AK
CHECKED BY:	CM

REV	DATE	DESCRIPTION
A	2/25/22	PRELIMINARY CD'S
B	03/21/22	CLIENT REVISIONS
C	5/19/22	CLIENT REVISIONS

Licensor:
COLORADO LICENSED
TIM ALEXANDER
44563
EXP 10/31/2023
PROFESSIONAL ENGINEER
SIGNED, 19 MAY 2022

Issued For:
5/19/22
PRELIMINARY CD'S

SHEET TITLE:
GROUNDING DETAILS

SHEET NUMBER:
G-4

Site Plan Drawing_v1.pdf Markup Summary

[1] 823722_PETERSON AFB NORTH_RELO_COL02568_REV C_PCD_04.06.22 (Approved, TA, 19 May 2022)-T-1 (2)

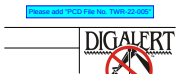

Page Label: [1] 823722_PETERSON AFB NORTH_RELO_COL02568_REV C_PCD_04.06.22 (Approved, TA, 19 May 2022)-T-1
Author: Carlos

Please add "PCD File No. TWR-22-005"

Page Label: [1] 823722_PETERSON AFB NORTH_RELO_COL02568_REV C_PCD_04.06.22 (Approved, TA, 19 May 2022)-T-1
Author: ashmathy

Please include:
-signature block for PCD department, 1-2 inches

[9] 823722_PETERSON AFB NORTH_RELO_COL02568_REV C_PCD_04.06.22 (Approved, TA, 19 May 2022)-A-1 (2)

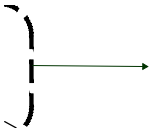

Page Label: [9] 823722_PETERSON AFB NORTH_RELO_COL02568_REV C_PCD_04.06.22 (Approved, TA, 19 May 2022)-A-1
Author: ashmathy

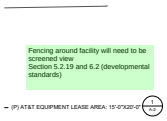

Page Label: [9] 823722_PETERSON AFB NORTH_RELO_COL02568_REV C_PCD_04.06.22 (Approved, TA, 19 May 2022)-A-1
Author: ashmathy

Fencing around facility will need to be screened view
Section 5.2.19 and 6.2 (developmental standards)

[10] 823722_PETERSON AFB NORTH_RELO_COL02568_REV C_PCD_04.06.22 (Approved, TA, 19 May 2022)-A-2 (1)

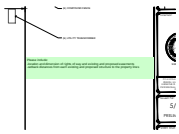

Page Label: [10] 823722_PETERSON AFB NORTH_RELO_COL02568_REV C_PCD_04.06.22 (Approved, TA, 19 May 2022)-A-2
Author: ashmathy

Please include:
-location and dimension of rights of way and existing and proposed easements
-setback distances from each existing and proposed structure to the property lines