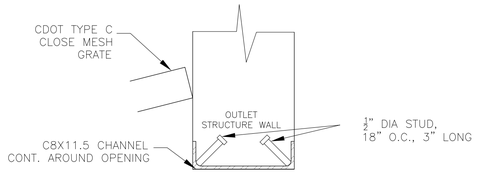

DETAIL A
NO SCALE

NOTE:
AFTER CONCRETE STRUCTURE HAS BEEN POURED ALL GRATE DIMENSIONS SHALL BE FIELD VERIFIED PRIOR TO GRATE CONSTRUCTION

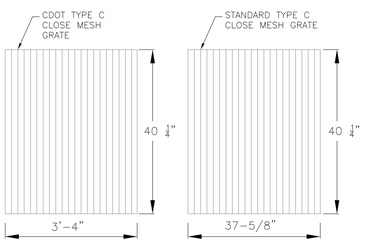

GRATE 1
NO SCALE

GRATES 2 & 3
NO SCALE

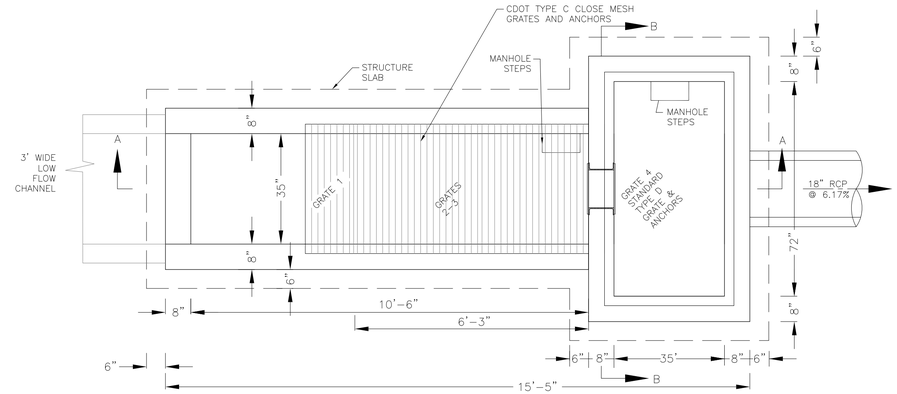

OUTLET STRUCTURE DETAIL – PLAN VIEW
NO SCALE

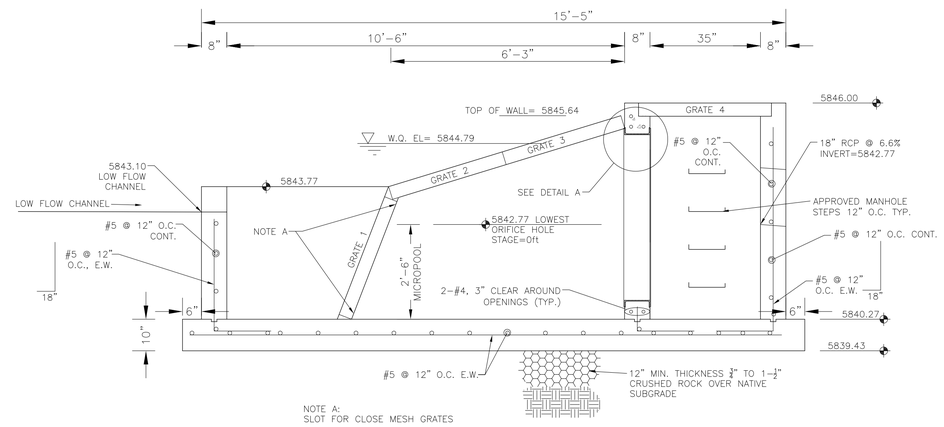

OUTLET STRUCTURE DETAIL – SECTION A–A
NO SCALE

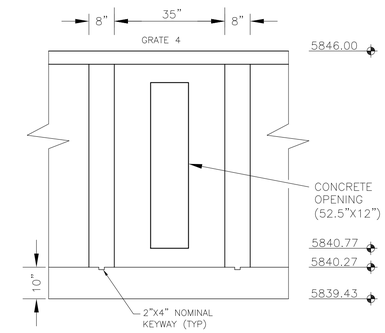

OUTLET STRUCTURE DETAIL – SECTION B–B
NO SCALE

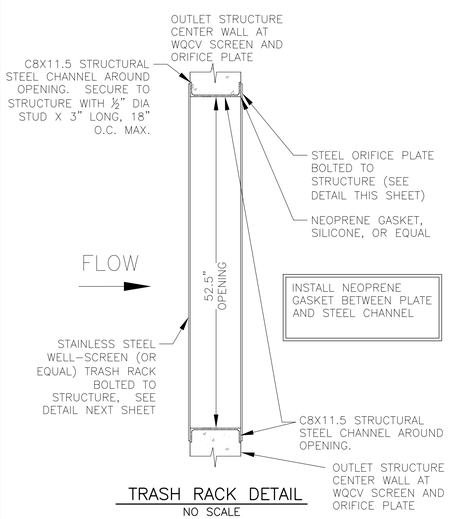

TRASH RACK DETAIL
NO SCALE

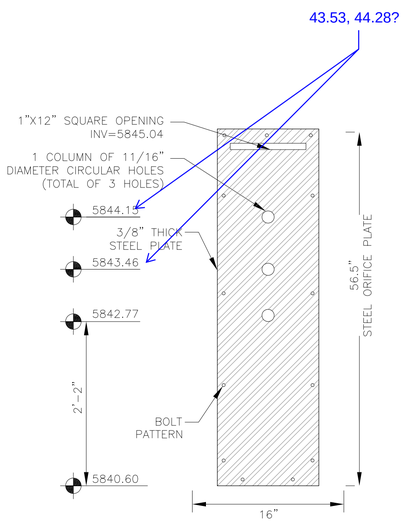

ORIFICE PLATE DETAIL
NO SCALE

OUTLET STRUCTURE, FOREBAY, AND DRAIN CHANNEL NOTES:

1. PRIOR TO CONSTRUCTION, CONTRACTOR SHALL PROVIDE SHOP DRAWINGS FOR ALL COMPONENTS OF THE OUTLET STRUCTURE.
2. GRADE 60 REINFORCING STEEL REQUIRED. SEE TABLE FOR THE MINIMUM LAP SPLICE LENGTH FOR REINFORCING BARS. ALL REINFORCING STEEL SHALL HAVE A TWO-INCH MINIMUM CLEARANCE FROM EDGE OF CONCRETE, UNLESS OTHERWISE NOTED.

BAR SIZE	#4	#5	#6
MIN. SPLICE LENGTH	1'-3"	1'-7"	2'-0"

3. CONCRETE FOR THE OUTLET STRUCTURE AND FOREBAY SHALL BE CDOT CLASS D CONCRETE.
4. CONCRETE FOR DRAIN CHANNELS SHALL BE CDOT CLASS B CONCRETE
5. EXPANSION JOINT MATERIAL SHALL MEET AASHTO SPECIFICATION M-213. EXPANSION JOINT MATERIAL SHALL BE ½" THICK, SHALL EXTEND THE FULL DEPTH OF CONTACT SURFACE AND THE JOINT SHALL BE SEALED, REFER TO DETAILS.
6. ALL EXPOSED CONCRETE CORNERS SHALL HAVE A ⅜" CHAMFER UNLESS OTHERWISE NOTED.
7. SUBGRADE TO BE 12" THICK CLEAN FILL COMPACTED TO 95% STANDARD PROCTOR DENSITY PER ASTM M698 UNDER STRUCTURE.
8. REFER TO POND DETAILS FOR PRESEDIMENTATION/FOREBAY DESIGN.
9. ENGINEER SHALL BE NOTIFIED PRIOR TO BEGINNING CONSTRUCITON OF OUTLET STRUCTURE TO SCHEDULE OBSERVATION VISITS FOR STRUCTURES.

WQCV WELL-SCREEN NOTES:

1. Well-Screen shall be stainless steel and attached by stainless steel bolts along edge of the mounting frame.

2. WQCV Well Screen
- Type of Screen: Stainless steel #93 Vee Wire (Johnson Vee Wire (tm) Stainless Steel Screen or equivalent with 60% open area)
- Screen slot opening dimension: 0.139" (Screen #93 Vee Wire Slot Opening)
- Type and Size of Support Rod: TE 0.074"X0.50"
- Spacing of Support Rod (O.C.): 1.0 Inch
- Total Screen Thickness: 0.655"
- Carbon Steel Holding Frame Type: 3/4" x 1.0" angle

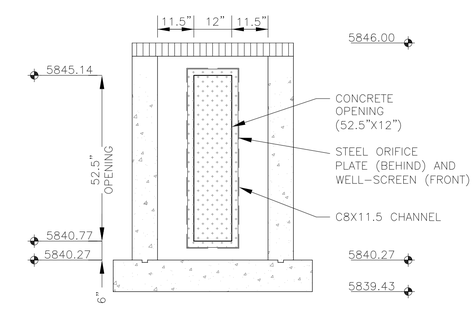

OUTLET STRUCTURE DETAIL – SECTION B–B
NO SCALE

CORE ENGINEERING GROUP
15004 1ST AVENUE S.
BURNSVILLE, MN 55306
PH: 719.570.1100
CONTACT: RICHARD L. SCHINDLER, P.E.
EMAIL: Rich@ceg1.com

NO.	DESCRIPTION	DATE

PREPARED FOR:
LORSON, LLC
212 N. WAHSATCH AVE, SUITE 301
COLORADO SPRINGS, COLORADO 80903
(719) 635-3200
CONTACT: JEFF MARK

PROJECT:
THE RIDGE AT LORSON RANCH
FONTAINE BLVD – WALLEYE DR
COLORADO SPRINGS, COLORADO

DRAWN: RLS
DESIGNED: RLS
CHECKED: RLS

POND F WQ POND OUTLET STRUCTURE DETAILS

DATE: SEPT 28, 2021
PROJECT NO. 100.064
SHEET NUMBER C9.6
TOTAL SHEETS: 23

KEY MAP
NO SCALE

DETENTION POND AREAS:

1. C1 BASINS DRAIN TO POND C1
2. C3 & C4 BASINS DRAIN TO POND C2.1
3. C5 BASINS DRAIN TO POND C2.2
4. C6 BASINS DRAIN TO POND C4
5. F1.3–F1.4 BASINS DRAIN TO WQ POND F (NO DETENTION, WQ ONLY)

*ALL DETENTION PONDS HAVE BEEN CONSTRUCTED PER SF 21-010 AND EGP 20-005 (THE HILLS AT LORSON RANCH) EXCEPT WQ POND F

**SEE POND EXHIBIT FOR POND LOCATIONS

LEGEND

- PUD BOUNDARY
- BASIN BOUNDARY
- BASIN DESIGN POINT
- BASIN I.D. / ACREAGE / 5 YR/100 YR CFS (DENOTES OVERALL BASIN)
- DIRECTION OF FLOW
- EXISTING CONTOUR
- PROPOSED CONTOUR
- ROW/LORSON RANCH BOUNDARY
- EXISTING STORM SEWER
- EXISTING OVERHEAD TRANSMISSION LINES
- PROPOSED STORM SEWER
- TIME OF CONCENTRATION
- HP HIGH POINT
- LP LOW POINT

RUNOFF SUMMARY				
D.P.		5 YEAR cfs	100 YEAR cfs	NOTES
12		9.9	21.8	STREET FLOW
13		8.5	24.3	STREET FLOW
14		17.6	30.4	FLOW IN STORM SEWER
15		8.7	27.3	STREET FLOW
16		26.0	46.9	FLOW IN STORM SEWER
17		7.5	26.7	STREET FLOW
18		33.5	67.3	FLOW IN STORM SEWER
19		10.3	28.8	STREET FLOW
20		43.8	88.5	FLOW IN STORM SEWER
35a		5.9	13.2	STREET FLOW
35b		1.9	4.6	STREET FLOW
35c		7.8	15.7	FLOW STORM SEWER
35d		1.9	8.4	FLOW FROM WQ POND F
35e		2.5	18.2	FLOW OFFSITE TO SOUTH
35f		6.0	40.2	FLOW OFFSITE TO THE SOUTH
35		15.5	69.5	FLOW OFFSITE TO THE EAST

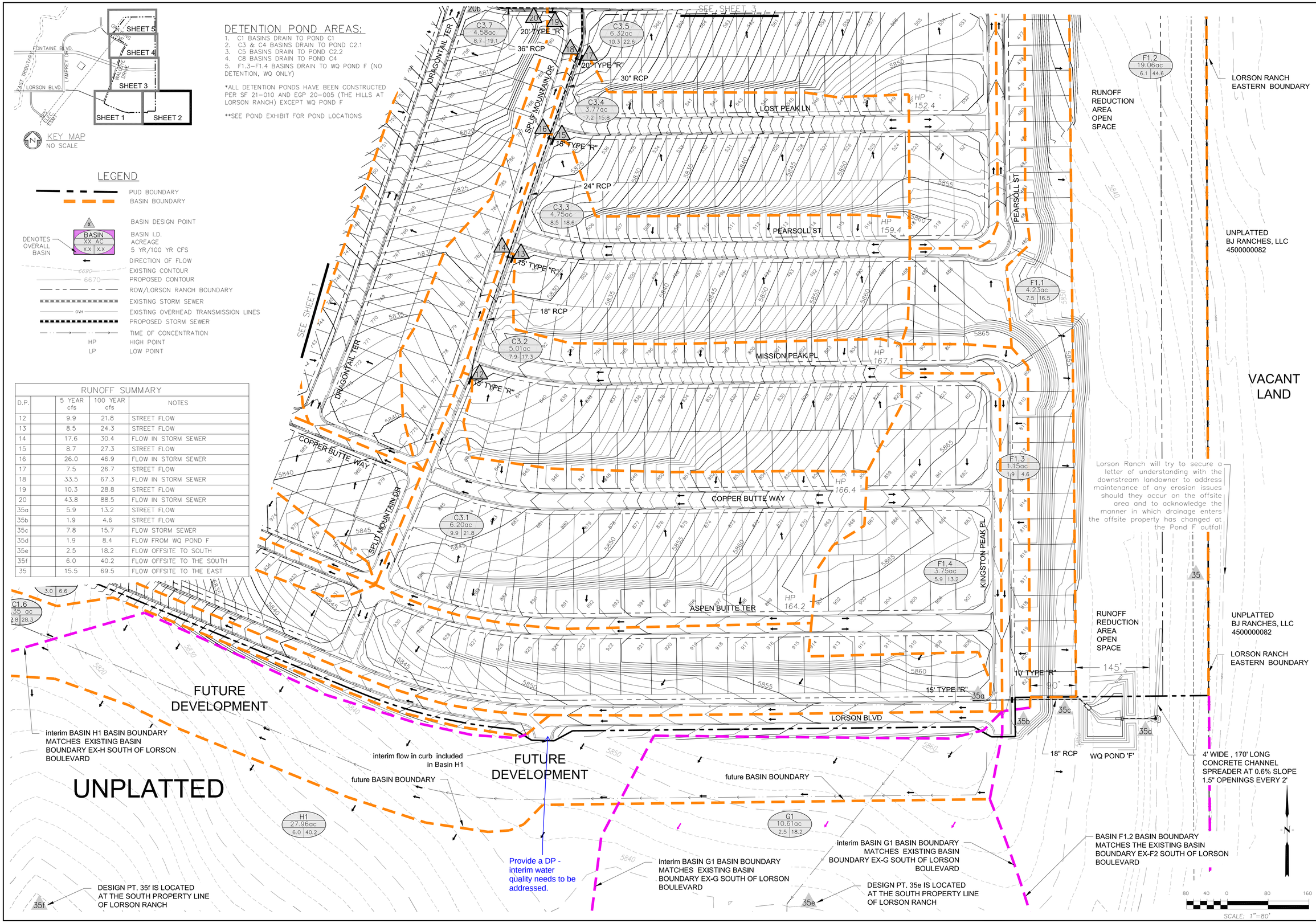

CORE ENGINEERING GROUP
15004 1ST AVE. S
BURNSVILLE, MN 55306
PH: 719.570.1100
CONTACT: RICHARD L. SCHINDLER, P.E.
EMAIL: Rich@ceg1.com

NO.	DESCRIPTION	DATE

PREPARED FOR:
LORSON, LLC
212 N. WAHSATCH AVE., SUITE 301
COLORADO SPRINGS, COLORADO 80903
(719) 635-3200
CONTACT: JEFF MARK

PROJECT: THE RIDGE AT LORSON RANCH
FONTAINE BLVD. & WALLETE DRIVE
EL PASO COUNTY, COLORADO

DRAWN: RLS
DESIGNED: LAB
CHECKED: LAB

DEVELOPED CONDITIONS THE RIDGE AT LORSON RANCH

DATE: SEPT, 2021

PROJECT NO. 100.064

SHEET NUMBER 2

TOTAL SHEETS: 5