4 Inverness Court East
Suite 250
Englewood, CO 80112
Office: (303) 770-7878
Fax: (303) 770-7667

LETTER OF TRANSMITTAL

TO: Steamboat Structures

DATE: 6/2/2021

FILE NO. 002-01

ATTN: Heather Reed

RE: Forest Lake Bridges

WE ARE SENDING YOU:

- ☐ Shop Drawings
- ☐ Specifications
- ☐ Plans
- ☐ Copy of Letter
- ☐ Reports
- ☑ Submittal Information
- ☐ Samples
- ☐ _____

SUBMITTED BY: Structures

COPIES	DESCRIPTION	CONTRACTOR
1	Drilling Method Statement	Structures/LMS

THESE ARE TRANSMITTED:

- ☐ For Approval
- ☑ For Your Use
- ☑ As Requested
- ☑ For Review and Comment
- ☐ Approved As Submitted
- ☐ Approved As Noted
- ☐ Returned for Corrections
- ☐ _____

REMARKS:

cc: File

SHOP DRAWING REVIEW

☐ NO EXCEPTIONS ☒ REVISE AS NOTED
☐ REVISE AND RESUBMIT ☐ REJECTED

This review is for general conformance with the design intent of the project and general compliance with the information provided in the contract documents. Review, corrections, or comments made concerning the shop drawings during this review do not relieve the contractor from compliance with the requirements of the drawings and specifications, nor relieve the contractor of contractual responsibility for any error or deviation from the contract documents.

The contractor is responsible for, but not limited to: confirming all quantities, dimensions, and structural capabilities, selecting fabrication and construction techniques, coordinating work with that of all other trades, and performing work in a safe and satisfactory manner.

STEAMBOAT STRUCTURES, LLC

BY: H. Reed DATE: 7/07/21

LMS Drilling, Inc.
10420 E. 107th Place
Brighton, CO 80601
Ph. (303) 287-3600 Fax (303) 287-1033

FOREST LAKES BRIDGES
Caisson Drilling Method Statement

503.02

(a.)

1. On-Site Supervisors/Operators

2. Personnel Experience

Supervisors/Operators

Scott Cimfl, Operator
Has worked for LMS Drilling, Inc. since March 3, 1999 working first as a laborer and working his way up to Drill Rig/Crane Operator.

Joseph Espinosa, Operator
Has worked for LMS Drilling, Inc. since May 18, 2004 working first as a laborer and working his way up to Drill Rig Operator.

Scott Rhoades
Has worked for LMS Drilling, Inc. since June 10, 2010 working first as a laborer and working his way up to Drill Rig Operator.

LMS Drilling, Inc.
10420 E. 107th Place
Brighton, CO 80601
Ph. (303) 287-3600 Fax (303) 287-1033

FOREST LAKES BRIDGES
Caisson Drilling Method Statement

b.) Drilled Shaft Excavation Method

1. All personnel will be trained to stay a minimum of 6-ft. away from any hole that is not protected from fall hazard. The hole will be covered by either plywood or the auger if personnel need to approach the hole. These measures will be observed after the hole depth is greater that 5-ft. The loader operator shall keep the wheels of the loader more that 6-ft. from the edge of the hole if possible.
2. Set drill rig with 42" dia. size auger over centerline of hole location.

2.a Drill shafts shall maintain vertically plumb using the following methods and techniques by using a built in bubble level during the drilling operations.

3. Drill down to top of bedrock, if water is present and hole is not stable construct drill slurry utilizing in-situ materials and potable water.
4. Set 42" dia. size diameter casing through slurry and seat into bedrock.
5. Clean slurry from casing using mudbucket
6. Drill the required penetration into bedrock.
7. All materials removed from the hole will be spun off next to the hole for removal by a loader provided by others.
8. Clean bottom of hole utilizing the auger or mud bucket if applicable.
9. After hole is approved by inspector begin concrete placement.
10. After concrete is inside casing by 5 – 10 ft. break casing loose by means of drilling winch. Pull casing and maintain vertical plumbness of casing during removal.
11. Continue concrete placement and casing removal simultaneously.
12. Once casing is removed from hole, set casing down and move to next location.

Place rebar prior to concrete placement

LMS Drilling, Inc.
10420 E. 107th Place
Brighton, CO 80601
Ph. (303) 287-3600 Fax (303) 287-1033

FOREST LAKES BRIDGES
Caisson Drilling Method Statement

Anticipated Equipment and Tooling

Drill rig with appropriate size diameter auger with capacity to complete the project through material indicated by geotechnical investigation provided. The drill rigs and equipment listed below were chosen because they are all rated as heavy duty commercial sized rigs capable of drilling 54” diameter holes through the materials that are represented in the geotechnical investigation.

Spiradrill XHD
Watson 3110
SoilMec SR 30

42” dia. size OD casing with wall thickness of .5”.

42” dia. size auger with standard earth digging teeth

42” dia. size mudbucket

LMS Drilling, Inc.
10420 E. 107th Place
Brighton, CO 80601
Ph. (303) 287-3600 Fax (303) 287-1033

FOREST LAKES BRIDGES
Caisson Drilling Method Statement

Jobs completed in the last 5 years

Project:	CDOT IM 0253-222
Owner:	CDOT
Contractor:	Flatiron Constructors
Telephone:	720-494-8016

Project:	WYDOT Douglas-Glenrock
Owner:	WYDOT
Contractor:	Reiman Corp
Telephone:	307-632-8971

Project:	CDOT US Hwy 36
Owner:	CDOT
Contractor:	Jalisco International
Telephone:	303-287-8905

4 Inverness Court East
Suite 250
Englewood, CO 80112
Office: (303) 770-7878
Fax: (303) 770-7667

LETTER OF TRANSMITTAL

TO: Steamboat Structures
Denver Metro, CO

DATE: 6/17/2021

FILE NO. 002-01

ATTN: Heather Reed

RE: Forest Lakes Bridges

WE ARE SENDING YOU:

- [x] Shop Drawings
- [ ] Specifications
- [ ] Plans
- [ ] Copy of Letter
- [ ] Reports
- [x] Submittal Information
- [ ] Samples
- [ ] _____

SUBMITTED BY: Structures

COPIES	DESCRIPTION	CONTRACTOR
1	Piling WEAP Report	Structures

THESE ARE TRANSMITTED:

- [x] For Approval
- [ ] For Your Use
- [ ] As Requested
- [x] For Review and Comment
- [ ] Approved As Submitted
- [ ] Approved As Noted
- [ ] Returned for Corrections
- [ ] _____

REMARKS:

cc: File

SHOP DRAWING REVIEW

X NO EXCEPTIONS ☐ REVISE AS NOTED
☐ REVISE AND RESUBMIT ☐ REJECTED

This review is for general conformance with the design intent of the project and general compliance with the information provided in the contract documents. Review, corrections, or comments made concerning the shop drawings during this review do not relieve the contractor from compliance with the requirements of the drawings and specifications, nor relieve the contractor of contractual responsibility for any error or deviation from the contract documents.

The contractor is responsible for, but not limited to: confirming all quantities, dimensions, and structural capabilities, selecting fabrication and construction techniques, coordinating work with that of all other trades, and performing work in a safe and satisfactory manner.

STEAMBOAT STRUCTURES, LLC

BY: Heather Reed DATE: 06/23/21

GROUND ENGINEERING

May 5th, 2021

Job Name: Pile Foundations, WEAP Analysis: **Forest Lakes Bridges,** Monument, Colorado

Job Number: 21-8536

Structures Inc.
4 Inverness Court East, Suite 250
Englewood, CO 80112

Attn: Elliot VanStelle

GROUND Engineering was requested to perform a WEAP Analysis (Wave Equation Analysis) for the proposed piles to be driven for the Forest Lakes Bridges (Mesa Top Drive South over North Beaver Creek) located in Monument, Colorado. The contractor proposes to use a D 19 single acting diesel impact hammer to drive the piling.

A Wave Equation Analysis is provided based on the following:

- Hammer Data: provided by Structures Inc. (D19 Diesel Fueled Open-Ended Hammer).
- Pile Data: Forest Lakes Bridges Foundation Layout, Sheet B08, dated 1/21/21.
- Subsurface Forest Lakes Bridges Engineering Geology, Sheet B05, dated 1/21/21

Based on the provided information above, a WEAP Analysis was prepared for the proposed bridge foundations. The soil profile utilized for this wave equation analysis was referenced from the engineering geology identified above. The plans indicate that 12 X 53 H-piles are to be driven to depths ranging from 19 to 26 feet for Abutment #1 and 26 to 30 feet for Abutment #3. Pile penetration depths may be more or less depending on the materials encountered at the specific pile locations.

The plans reference a “MAX LOAD (FACTORED) (KIPS)” of 215 kips for Abutment #1 and 200 kips for Abutment #3. Utilizing typical AASHTO/LRFD design methods the maximum factored design load is to be divided by the resistance factor of 0.65 to compare against maximum capacity resistance measured from the PDA. Utilizing the loads provided and the resistance factor, a resistance value of **331 kips** was calculated for Abutment #1 and **308 kips** for Abutment #3.

As common practice, GROUND requests that the structural engineer verify the load and factor to be used. Per the specification, PDA data records obtained from the end of driving will be analyzed using the CAPWAP computer program for signal matching analysis.

Bearing charts (shown in Appendix A) provide increasing capacity values as a function of blow count and include a capacity ranges that encompass the minimum factored (ultimate) load to be compared to with the PDA testing. The bearing charts are prepared assuming the proposed diesel hammer is in good working order.

The bearing charts are produced for fuel setting 4 (maximum fuel setting) of the provided hammer. Based on the available data, the proposed hammer should be adequate to drive the proposed piling to the required capacity within the allowable stresses of the piling (less than 0.9 of the yield strength of steel or less than 45ksi). The following table is provided to estimate blow count at design capacities based on the WEAP data.

Location	H-Pile Section	Pile Load (kips)	Estimated Blow Count Range (blows/inch)
Abutment #1	12 x 53	331	4-6
Abutment #3	12 x 53	308	4-6

The attached data and estimations above are based on theoretical models and approximated subsurface modeling. This data should be used as a guide during driving and should not be used to determine final resistance (capacity) versus blow count criteria. Final blow count criteria should be established based on the PDA and CAPWAP results after driving the test piles for the given hammer and established fuel setting. In addition, this does not supersede any applicable minimum tip or minimum penetration requirements as dictated by the project documents.

Please do not hesitate to contact this office with any questions concerning this report.

Sincerely,
GROUND ENGINEERING CONSULTANTS, INC.

Jaro Lepic

Reviewed by Kelsey Van Bemmel, P.E.

Appendix A

Bearing Chart Performed at Fuel Setting #4:

- Abutment #1

Ground-Eng-Consultants
Forest Lake Bridges Abut #1

06-May-2021
GRLWEAP Version 2010

Ultimate Capacity kips	Maximum Compression Stress ksi	Maximum Tension Stress ksi	Blow Count blows/in	Stroke ft	Energy kips-ft
200.0	29.49	0.55	2.1	7.13	16.93
250.0	33.46	0.80	2.8	7.51	17.10
275.0	35.20	0.92	3.1	7.69	17.23
300.0	36.79	1.69	3.5	7.88	17.39
325.0	38.38	1.69	3.9	8.08	17.74
331.0	38.72	1.70	4.0	8.13	17.83
350.0	39.84	1.97	4.3	8.29	18.13
375.0	41.64	2.74	4.8	8.49	18.51
400.0	43.29	3.31	5.4	8.63	18.72
425.0	44.81	3.66	6.0	8.84	19.05

- Abutment #3

Ground-Eng-Consultants
Forest Lake Bridges Abut #3

06-May-2021
GRLWEAP Version 2010

Ultimate Capacity kips	Maximum Compression Stress ksi	Maximum Tension Stress ksi	Blow Count blows/in	Stroke ft	Energy kips-ft
200.0	29.18	0.65	2.1	7.09	17.19
250.0	33.18	1.08	2.7	7.48	17.39
275.0	34.90	1.37	3.1	7.67	17.61
300.0	36.53	1.85	3.4	7.87	17.96
308.0	37.09	2.04	3.6	7.95	18.09
325.0	38.20	2.34	3.9	8.09	18.33
350.0	40.44	2.73	4.3	8.31	18.66
375.0	42.53	3.05	4.8	8.52	19.08
400.0	44.34	3.41	5.5	8.69	19.37
425.0	46.12	3.83	6.1	8.92	19.82

4 Inverness Court East
Suite 250
Englewood, CO 80112
Office: (303) 770-7878
Fax: (303) 770-7667

LETTER OF TRANSMITTAL

TO: Steamboat Structures
Denver Metro, CO

DATE: 6/17/2021

FILE NO. 001-01

ATTN: Heather Reed

RE: Forest Lakes Bridges

WE ARE SENDING YOU:

- ☐ Shop Drawings
- ☐ Specifications
- ☐ Plans
- ☐ Copy of Letter
- ☐ Reports
- ☑ Submittal Information
- ☐ Samples
- ☐ _____

SUBMITTED BY: Structures

COPIES	DESCRIPTION	CONTRACTOR
1	Pile Driving Package	Structures

THESE ARE TRANSMITTED:

- ☑ For Approval
- ☐ For Your Use
- ☐ As Requested
- ☐ For Review and Comment
- ☐ Approved As Submitted
- ☐ Approved As Noted
- ☐ Returned for Corrections
- ☐ _____

REMARKS:

cc: File

SHOP DRAWING REVIEW

☐ NO EXCEPTIONS ☒ REVISE AS NOTED
☐ REVISE AND RESUBMIT ☐ REJECTED

This review is for general conformance with the design intent of the project and general compliance with the information provided in the contract documents. Review, corrections, or comments made concerning the shop drawings during this review do not relieve the contractor from compliance with the requirements of the drawings and specifications, nor relieve the contractor of contractual responsibility for any error or deviation from the contract documents.

The contractor is responsible for, but not limited to: confirming all quantities, dimensions, and structural capabilities, selecting fabrication and construction techniques, coordinating work with that of all other trades, and performing work in a safe and satisfactory manner.

STEAMBOAT STRUCTURES, LLC

BY: Heather Reed DATE: 06/30/21

If welding is required, please provide current welding logs

Pile Driving Method Statement

RE: Forest Lake Bridges (REV. 3 – 6/17/2021 County Submittal)

Crane: Link-Belt LS-218H (100 ton)

Pile Hammer: Delmag 19-42 (21,390 – 48,680 ft-lbs) for HP 12x53 pile.

Cushion Material: Micarta and Aluminum

Piling Material: See attached.

Mobilization:
Structures will offload the crane and support trucks at the staging area near one of the abutments and build the crane. The approach roadway be utilized depending on available space. The crane will drive piling at one abutment. Once the first abutment pile driving is complete, if Structures is able to drive piling from that previously completed abutment they will do so otherwise the crane will be broken down and mobilized to the other abutment to complete driving there.

Pile Numbering & Sequence:
Pile driving will be occur starting on one abutment going from North to South or vice versa and will occur similarly at the other abutment until completed.

Pile Splicing:
While splices are not anticipated, splices will be done per CDOT Standard Specifications 502.12, they will be conducted as follows:

For H Pile, a square-groove butt-joint weld using 1/8" root opening that will be made with 2 passes around the perimeter of the pile. The first pass shall be made from one side of the part being welded and shall penetrate one half the thickness of the member. The second pass shall be made on the side opposite from the first. The slag left by the first pass shall be completely removed before making the second pass.

See attached welding procedures for additional information.

List the third party by name

Pile Testing:
Dynamic load testing by a third party contracted by the General Contractor will occur on pile locations determined by the engineer and agreed upon by Structures, Inc. PDA will be performed on one (1) pile per abutment, per bridge.

Pile Final Cut-Off:
Once each pile has been driven to the minimum specified load or refusal, the piles will be cut at the specified cut-off elevation utilizing a torch. The excess pile cut-off lengths will be removed and properly disposed of by Structures, Inc. Piles may be cut once several piles have been completed or as field supervision deems most efficient.

Logs:
Once driving and cutoff have been completed, a log for all piles will be submitted to the engineer for record indicating final tip and cutoff elevation, total length, and splice location, if applicable.

Certifications:
The NCCO certifications for the crane operators and the welder certification for the welder is attached for reference.

HP

Steel H-Pile

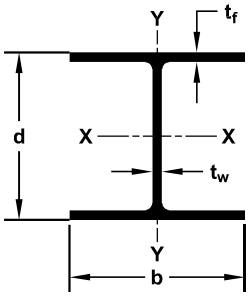

SECTION	Weight lb/ft (kg/m)	Area in² (cm²)	Depth d in (mm)	Flange Width b in (mm)	THICKNESS Flange (t_f) in (mm)	THICKNESS Web (t_w) in (mm)	Coating Area ft²/ft (m²/m)	PROPERTIES AXIS X-X I in⁴ (cm⁴)	AXIS X-X S in³ (cm³)	AXIS X-X Z in³ (cm³)	AXIS X-X r in (cm)	AXIS Y-Y I in⁴ (cm⁴)	AXIS Y-Y S in³ (cm³)	AXIS Y-Y Z in³ (cm³)	AXIS Y-Y r in (cm)
HP 8 HP 200	36 54	10.6 68.4	8.02 204	8.16 207	0.445 11.3	0.445 11.3	3.92 1.19	119 4953	29.8 488	33.6 550.6	3.36 8.53	40.3 1677	9.88 162	15.2 249.1	1.95 4.95
HP 10 HP 250	42 63	12.4 80.0	9.70 246	10.10 257	0.420 10.7	0.415 10.5	4.83 1.47	210 8741	43.4 711	48.3 791.5	4.13 10.5	71.7 2984	14.2 233	21.8 357.2	2.41 6.12
	57 85	16.7 108	9.99 254	10.20 259	0.565 14.4	0.565 14.4	4.91 1.50	294 12237	58.8 964	66.5 1089.7	4.18 10.6	101 4204	19.7 323	30.3 496.5	2.45 6.22
HP 12 HP 310	53 79	15.5 100	11.80 300	12.00 305	0.435 11.0	0.435 11.0	5.82 1.77	393 16358	66.7 1093	74.0 1212.6	5.03 12.8	127 5286	21.1 346	32.2 527.7	2.86 7.26
	63 94	18.4 119	11.90 302	12.10 307	0.515 13.1	0.515 13.1	5.86 1.79	472 19646	79.1 1296	88.3 1447.0	5.06 12.9	153 6368	25.3 415	38.7 634.2	2.88 7.32
	74 110	21.8 141	12.10 307	12.20 310	0.610 15.5	0.605 15.4	5.91 1.80	569 23683	93.8 1537	105 1720.6	5.11 13.0	186 7742	30.4 498	46.6 763.6	2.92 7.42
	84 125	24.6 159	12.30 312	12.30 312	0.685 17.4	0.685 17.4	5.97 1.82	650 27055	106 1737	120 1966.4	5.14 13.1	213 8866	34.6 567	53.2 871.8	2.94 7.47
	89 132	25.9 167	12.36 314	12.32 313	0.720 18.3	0.720 18.3	6.04 1.84	689 28700	111.6 1830	126.3 2070	5.16 13.1	225 9370	36.5 599	56.2 922	2.94 7.48
	102 152	29.9 193	12.56 319	12.64 321	0.819 20.8	0.819 20.8	6.17 1.88	811 33800	129.3 2120	147.6 2420	5.20 13.2	276 11500	43.7 716	67.1 1100	3.04 7.71
	117 174	34.4 222	12.76 324	12.87 327	0.929 23.6	0.929 23.6	6.26 1.91	946 39400	148.2 2430	170.8 2800	5.24 13.3	331 13800	51.4 843	79.3 1300	3.11 7.89
HP 14 HP 360	73 109	21.4 138	13.60 345	14.60 371	0.505 12.8	0.505 12.8	6.96 2.12	729 30343	107 1753	118 1933.7	5.84 14.8	261 10864	35.8 587	54.6 894.7	3.49 8.86
	89 132	26.1 168	13.80 351	14.70 373	0.615 15.6	0.615 15.6	7.02 2.14	904 37627	131 2147	146 2392.5	5.88 14.9	326 13569	44.3 726	67.7 1109.4	3.53 8.97
	102 152	30.1 194	14.00 356	14.80 376	0.705 17.9	0.705 17.9	7.06 2.15	1050 43704	150 2458	169 2769.4	5.92 15.0	380 15817	51.4 842	78.8 1291.3	3.56 9.04
	117 174	34.4 222	14.20 361	14.90 378	0.805 20.4	0.805 20.4	7.12 2.34	1220 50780	172 2819	194 3179.1	5.96 15.1	443 18439	59.5 975	91.4 1497.8	3.59 9.12
HP 16 HP 410	88 131	25.8 167	15.30 389	15.70 399	0.540 13.7	0.540 13.7	7.52 2.29	1110 46201	145 2376	161 2638.3	6.56 16.7	349 14526	44.5 729	68.2 1117.6	3.68 9.35
	101 150	29.9 193	15.50 394	15.80 401	0.625 15.9	0.625 15.9	7.56 2.30	1300 54110	168 2753	187 3064.4	6.59 16.7	412 17149	52.2 855	80.1 1312.6	3.71 9.42
	121 180	35.8 231	15.80 401	15.90 404	0.750 19.1	0.750 19.1	7.62 2.32	1590 66180	201 3294	226 3703.5	6.66 16.9	504 20978	63.4 1039	97.6 1599.4	3.75 9.53
	141 210	41.7 269	16.00 406	16.00 406	0.875 22.2	0.875 22.2	7.69 2.34	1870 77835	234 3835	264 4326.2	6.70 17.0	599 24932	74.9 1227	116 1900.9	3.79 9.63
	162 241	47.7 308	16.30 414	16.10 409	1.000 25.4	1.000 25.4	7.75 2.36	2190 91154	269 4408	306 5014.4	6.78 17.2	697 29011	86.6 1419	134 2195.9	3.82 9.70
	183 272	54.1 349	16.50 419	16.30 414	1.130 28.7	1.130 28.7	7.81 2.38	2510 104473	304 4982	349 5719.1	6.81 17.3	818 34047	100.0 1639	156 2556.4	3.89 9.88
HP 18 HP 460	135 201	39.9 257	17.50 445	17.80 452	0.750 19.1	0.750 19.1	8.54 2.60	2200 91570	251 4113	281 4604.7	7.43 18.9	706 29386	79.3 1299	122 1999.2	4.21 10.7
	157 234	46.2 298	17.70 450	17.90 455	0.870 22.1	0.870 22.1	8.60 2.62	2570 106971	290 4752	327 5358.5	7.46 18.9	833 34672	93.1 1526	143 2343.3	4.25 10.8
	181 269	53.2 343	18.00 457	18.00 457	1.000 25.4	1.000 25.4	8.66 2.64	3020 125701	336 5506	379 6210.7	7.53 19.1	974 40541	108.0 1770	167 2736.6	4.28 10.9
	204 304	60.2 388	18.30 465	18.10 460	1.130 28.7	1.130 28.7	8.73 2.66	3480 144847	380 6227	433 7095.6	7.60 19.3	1120 46618	124.0 2032	191 3129.9	4.31 11.0

HP

Steel H-Pile

Available Steel Grades

AMERICAN			CANADIAN			EUROPEAN**		
ASTM	YIELD STRENGTH		CSA G40.21	YIELD STRENGTH		EN 10034	YIELD STRENGTH	
	ksi	MPa		ksi	MPa		ksi	MPa
A36	36	250	**Grade 300 W**	44	300	**HISTAR 355**	51	355
A572 Grade 50	50	345	**Grade 350 W**	50	350	**HISTAR 420**	61	420
A572 Grade 60	60	415				**HISTAR 460**	67	460
A588	50	345						
A690	50	345						
A709	50	345						

Highlighted fields represent the most commonly used and readily available steel grades. ** HISTAR only available in some sizes.

Splicer and H-Pile Point

Splicer

H-Pile Point

Delivery Conditions & Tolerances

	ASTM A6	
Mass	± 2.5%	
Length§		
30 Feet and Under	± 0.375 inches	
Over 30 Feet	+ (0.375 inches + (length - 30)/80)	– 0.375 inches
Depth	± 0.125 inches	– 0.1875 inches
Flange Width	+ 0.25 inches	
Flanges out of Square		
HP 8 x 42 - HP 12 x 84	≤ 0.25 inches	
HP 14 x 73 - HP 14 x 117	≤ 0.3125 inches	
Web off Center	≤ 0.1875 inches	
Greatest Depth over Theoretical	≤ 0.25 inches	
Camber and Sweep***		
45 Feet and Under	(0.125")(Length in feet/10) but not over 0.375"	
Over 45 Feet	(0.375") + (0.125" (Length in feet - 45)/10)	

§ For HP ordered as bearing piles, length tolerances are +5 in. and -0 in.

***For the HP 10 x 42, 12 x 53, 12 x 63, 14 x 73, and 14 x 89 ordered as columns, tolerances are subject to negotiation with manufacturer.

Maximum Rolled Lengths†

HP	130’	39.6 m

† Longer lengths may be possible upon request.

SUPER BITE POINT – Series PAR-T

Dimensions

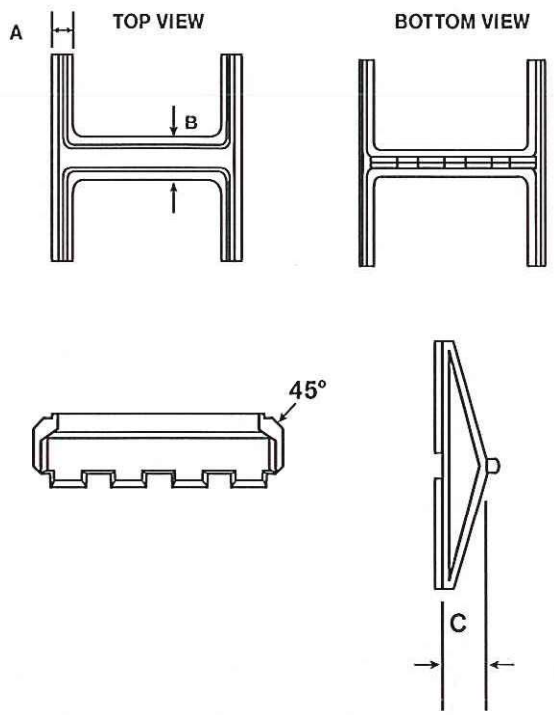

ASTM A148 90/60 - Heat Treated

	10"	12"	14"
A	1"	1-1/4"	1-1/4"
B	1-1/4"	1-7/16"	1-3/4"
C	2-9/16"	2-5/8"	2-15/16
WT	14	23	30

NORMAL FOUNDRY TOLERANCES APPLY

Installation Instructions

Super Bite Point Series PAR-T

1. Fit point onto the end of the square cut pile end.
2. Weld point to the pile in either flat or vertical position using AN E70XX electrodes.
3. Weld across full width of flange following chart below for minimum size weld.

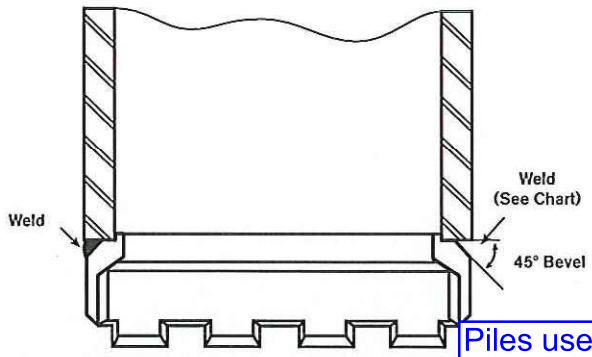

Piles used are HP12x53

Pile Size	Flange Thickness	Min. Size Groove Weld
HP 14 x 117	.805	7/16
x 102	.705	3/8
x 89	.615	3/8
x 73	.505	5/16
HP 12 x 84	.685	3/8
x 74	.610	3/8
x 63	.515	5/16
x 53	.435	5/16
HP 10 x 57	.565	5/16
x 42	.420	5/16

ASSOCIATED PILE & FITTING

45 Samworth Road, Clifton, NJ 07014
Tel: 973-773-8400
Fax: 973-773-8442
email: apf@associatedpile.com
www.associatedpile.com
Call Toll Free: 800-526-9047

(09/15)

Specifications

Hydraulic Lattice Boom Crawler Crane

LS-218H

100-Ton *(90 metric ton)*

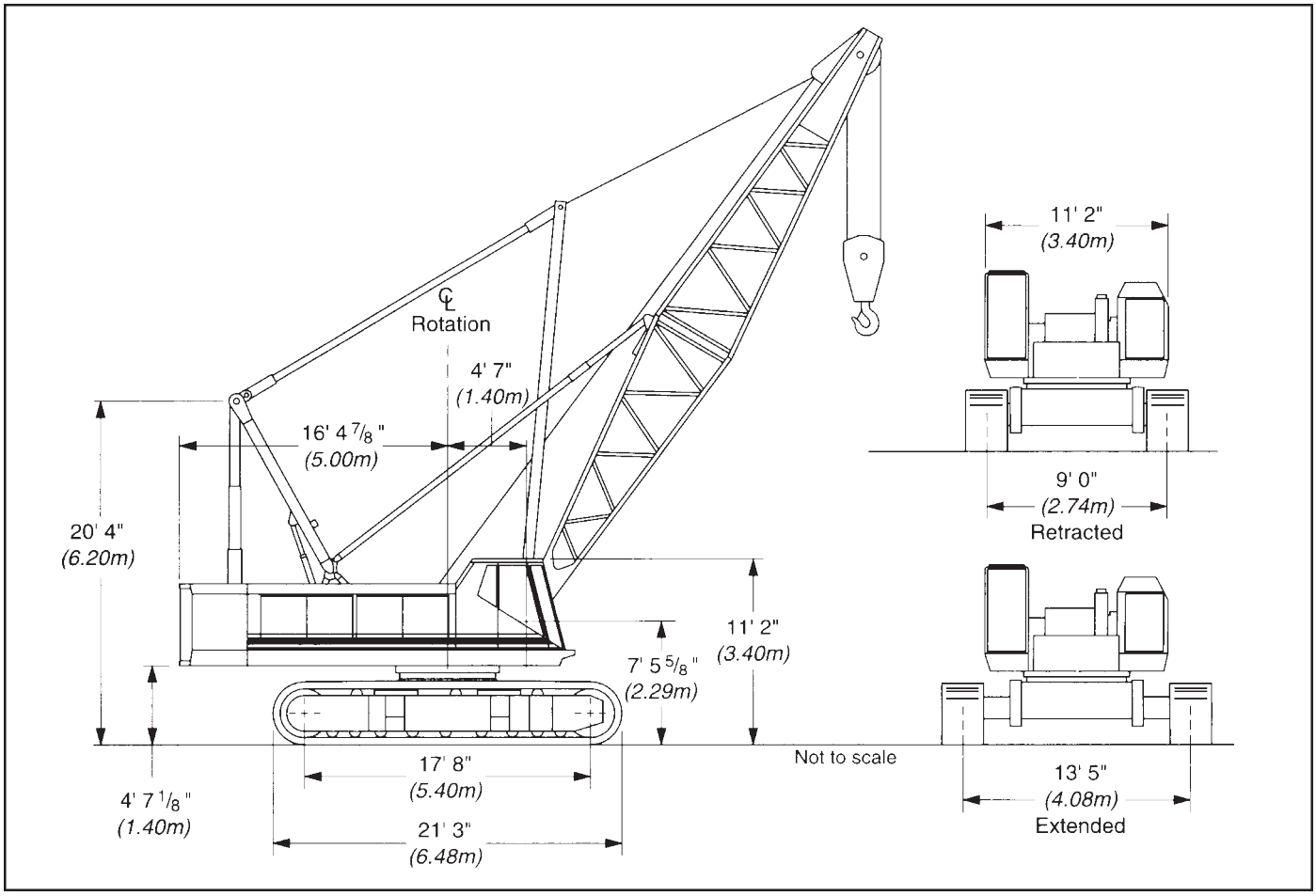

General dimensions	Feet	*meters*
Basic boom length	40' 0"	*12.20*
Overall width side frames extended - 36" *(.91 m)* track shoes	16' 5"	*5.00*
Overall width side frames retracted - 36" *(.91 m)* track shoes	12' 0"	*3.66*
Minimum ground clearance	21"	*0.53*

General dimensions	Feet	*meters*
Ground clearance - ctwt. "A"	4' 7-1/8"	*1.40*
Ground clearance - ctwt. "AB"	4' 7-1/8"	*1.40*
Overall width of counterweight	11' 1-3/8"	*3.40*
Tailswing of counterweight "A"	15' 7-3/8"	*4.76*
Tailswing of counterweight "AB"	16' 4-7/8"	*5.00*
Overall width less catwalks	11' 2"	*3.40*
Overall height for transport, gantry lowered	11' 2"	*3.40*

LS-218H Machine Transport Weights - approximate

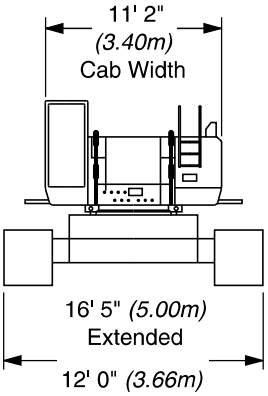

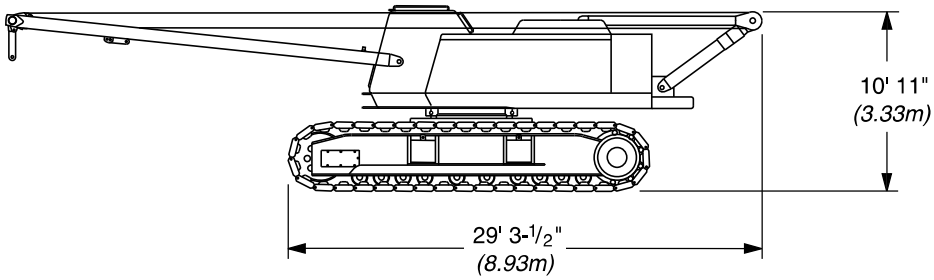

Assembly Weight - as shown
117,560 lbs. *(53 325 kg)*

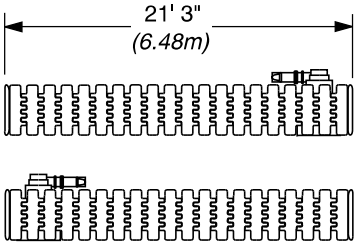

Tread Member w/36" *(.91m)* Shoes
23,800 lbs. *(10 796 kg)* Each

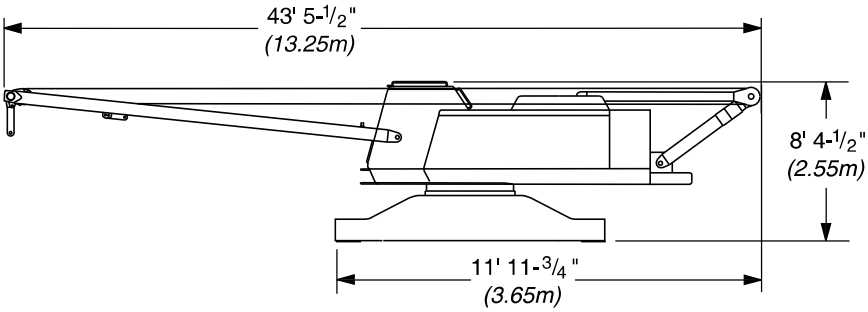

Upper & Carbody Shipping Weight
69,930 lbs. *(31 720 kg)*

Front Mount Third Drum
1,850 lbs. *(839 kg)* w/Rope

"A" Upper Counterweight
24,200 lbs. *(10 977 kg)*

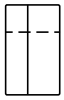

"B" Upper Counterweight
22,500 lbs. *(10 206 kg)*

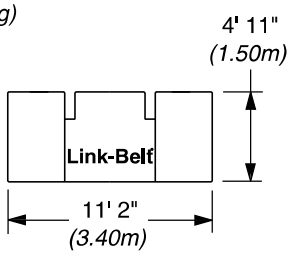

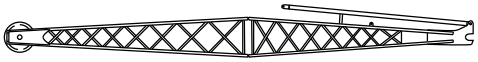

20' *(6.10m)* Basic Jib Assembly
1,340 lbs. *(608 kg)* Tube Jib

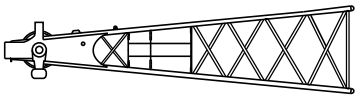

20' *(6.10m)* Peak Section
3,240 lbs. *(1 470 kg)* Tube Boom
3,090 lbs. *(1 402 kg)* Angle Boom

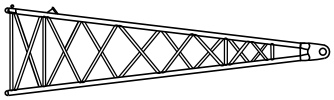

20' *(6.10m)* Base Section
2,170 lbs. *(984 kg)* Tube Boom
2,360 lbs. *(1 070 kg)* Angle Boom

Optional Boom Sections	Weight	Cross Section Size
10' *(3.05 m)* tube boom extension	770 lbs. *(349 kg)*	60" *(1.52 m)* wide x 50" *(1.27 m)* deep
20' *(6.10 m)* tube boom extension	1,270 lbs. *(576 kg)*	60" *(1.52 m)* wide x 50" *(1.27 m)* deep
30' *(9.14 m)* tube boom extension	1,750 lbs. *(794 kg)*	60" *(1.52 m)* wide x 50" *(1.27 m)* deep
10' *(3.05 m)* angle boom extension	1,040 lbs. *(472 kg)*	48" *(1.22 m)* wide x 48" *(1.22 m)* deep
20' *(6.10 m)* angle boom extension	1,680 lbs. *(762 kg)*	48" *(1.22 m)* wide x 48" *(1.22 m)* deep
30' *(9.14 m)* angle boom extension	2,400 lbs. *(1 089 kg)*	48" *(1.22 m)* wide x 48" *(1.22 m)* deep

Machine Working Weight - approximate

Complete basic machine with Mitsubishi 6D24-TEB diesel engine, turntable bearing, hydraulic independent swing and travel, 36" *(0.91 m)* track shoes, main operating drums and boomhoist, 40' *(12.19 m)* tubular boom w/live mast, no bucket or hook block but with 900' *(274.3 m)* of 1" *(25 mm)* dia. hoist rope.	
With 46,700 lb. *(21 183 kg)* counterweight "AB"	169,650 lbs. *(76 953 kg)*

Performance Specifications - Wire rope and rope drum data

Main load hoist wire rope length - using 1" *(25 mm)* diameter wire rope

Parts of line	Boom lengths													
	40' *(12.19 m)*		50' *(15.24 m)*		60' *(18.29 m)*		70' *(21.34 m)*		80' *(24.38 m)*		90' *(27.43 m)*		100' *(30.48 m)*	
	Feet	*meters*	Feet	*meters*	Feet	*meters*	Feet	*meters*	Feet	*meters*	Feet	*meters*	Feet	*meters*
1	105	*32.00*	125	*38.10*	145	*44.20*	165	*50.29*	185	*56.39*	205	*62.48*	225	*68.58*
2	150	*45.72*	180	*54.86*	210	*64.01*	240	*73.15*	270	*82.30*	300	*91.44*	330	*100.58*
3	195	*59.44*	235	*71.63*	275	*83.82*	315	*96.01*	355	*108.20*	395	*120.40*	435	*132.59*
4	240	*73.15*	290	*88.39*	340	*103.63*	390	*118.87*	440	*134.11*	490	*149.35*	540	*164.59*
5	285	*86.87*	345	*105.16*	405	*123.44*	465	*141.73*	525	*160.02*	585	*178.31*	645	*196.60*
6	330	*100.58*	400	*121.92*	470	*143.26*	540	*164.59*	610	*185.93*	680	*207.26*	750	*228.60*
7	375	*114.30*	455	*138.68*	535	*163.07*	615	*187.45*	695	*211.84*	775	*236.22*	855	*260.60*
8	420	*128.02*	510	*155.45*	600	*182.88*	690	*210.03*	780	*237.74*	870	*265.18*	960	*292.61*
9	465	*141.73*	565	*172.21*	665	*202.69*	765	*233.17*	865	*263.65*	965	*294.13*		
10	510	*155.45*	620	*188.98*	730	*222.50*	840	*256.03*	950	*289.56*				

Parts of line	Boom lengths															
	110' *(33.53 m)*		120' *(38.58 m)*		130' *(39.62 m)*		140' *(42.67 m)*		150' *(45.72 m)*		160' *(48.77 m)*		180' *(54.86 m)*		200' *(60.96 m)*	
	Feet	*meters*	Feet	*meters*	Feet	*meters*	Feet	*meters*	Feet	*meters*	Feet	*meters*	Feet	*meters*	Feet	*meters*
1	245	*74.68*	265	*80.77*	285	*86.87*	305	*92.96*	325	*99.06*	345	*105.16*	385	*117.35*	420	*128.02*
2	360	*109.73*	390	*118.87*	420	*128.02*	450	*137.16*	480	*146.30*	510	*155.45*	570	*173.74*	630	*192.02*
3	475	*144.78*	515	*156.97*	555	*169.16*	595	*181.36*	635	*193.55*	675	*205.74*	755	*230.12*	840	*256.03*
4	590	*179.83*	640	*195.07*	690	*210.31*	740	*225.55*	790	*247.79*	840	*256.03*	940	*286.51*	1,050	*320.04*
5	705	*214.88*	765	*233.17*	825	*251.46*	885	*269.75*	945	*288.04*						
6	820	*249.94*	890	*271.27*												
7	935	*284.99*														

Clamshell wire rope lengths - using one part of line

Attachment	Function	Boom Lengths									
		40' *(12.12 m)*		50' *(15.24 m)*		60' *(18.29 m)*		70' *(21.34 m)*		80' *(24.38 m)*	
		Feet	*meters*	Feet	*meters*	Feet	*meters*	Feet	*meters*	Feet	*meters*
Clamshell	Holding	110	*33.53*	130	*39.62*	150	*45.72*	170	*51.82*	190	*57.91*
	Closing	160	*48.77*	180	*54.86*	200	*60.96*	220	*67.06*	240	*73.16*

Drum wire rope capacities:

Wire rope layer	Front or rear drum - 21-1/2" *(0.54 m)* root diameter grooved lagging, 1" *(25 mm)* wire rope				Front mounted third drum - 12-3/4" *(0.32 m)* root diameter smooth lagging, 5/8" *(16 mm)* wire rope				Boomhoist drum - 16-1/2" *(0.41 m)* root diameter grooved lagging, 3/4" *(19 mm)* wire rope			
	Rope per layer		Total wire rope		Rope per layer		Total wire rope		Rope per layer		Total wire rope	
	Feet	*meters*	Feet	*meters*	Feet	*meters*	Feet	*meters*	Feet	*meters*	Feet	*meters*
1	138	*42.18*	138	*42.18*	72	*21.9*	72	*21.9*	56	*17.24*	56	*17.24*
2	149	*45.52*	287	*87.70*	80	*24.4*	153	*46.6*	60	*18.57*	117	*35.81*
3	160	*48.85*	448	*136.55*	88	*26.8*	242	*73.8*	65	*19.90*	182	*55.71*
4	171	*52.19*	619	*188.74*	96	*29.3*	339	*103.3*	69	*21.23*	252	*76.94*
5	182	*55.51*	801	*244.25*	104	*31.7*	444	*135.3*	74	*22.56*	326	*99.50*
6	193	*58.85*	994	*303.10*	113	*34.4*	557	*169.8*	78	*23.89*	404	*123.39*
7	204	*62.18*	1,198	*365.28*					82	*25.22*	487	*148.61*
8	214	*65.51*	1,413	*430.79*								

LS-218H Load Hoisting Performance

Available line speed and line pull - based on Mitsubishi 6D24-TEB at 2,000 rpm full load speed.
Line pulls are not based on wire rope strength. See wire rope chart for maximum permissible single part of line working loads.

Rope Layer	21-1/2" *(.55 m)* Front or Rear Drum					12-3/4" *(.32 m)* Third Drum - Front Mounted			
	speed	fpm	*m/min*	pounds	*kilograms*	fpm	*m/min*	pounds	*kilograms*
1	Low High	102 204	*31.1* *62.3*	54,012 26,340	*24 500* *11 947*	212	*64.6*	15,015	*6 811*
2	Low High	110 220	*33.4* *67.1*	49,603 24,190	*22 500* *10 972*	236	*71.9*	13,513	*6 129*
3	Low High	117 236	*35.8* *71.9*	45,855 22,360	*20 800* *10 142*	260	*79.2*	12,285	*5 572*
4	Low High	125 252	*38.2* *76.7*	42,769 20,850	*19 400* *9 457*	283	*86.3*	11,261	*5 108*
5	Low High	133 267	*40.6* *81.5*	39,903 19,460	*18 100* *8 826*	307	*93.6*	10,395	*4 715*
6	Low High	141 283	*43.0* *86.3*	37,478 18,270	*17 000* *8 287*	331	*100.9*	9,652	*4 378*
7	Low High	149 299	*45.4* *91.1*	35,273 17,200	*16 000* *7 801*	--	--	--	--
8	Low High	157 315	*47.8* *95.9*	33,289 16,230	*15 100* *7 361*	--	--	--	--

Wire rope: size, type and working strength

Wire rope application	Size: diameter		Type	Maximum permissible load	
	inches	*mm*		pounds	*kilograms*
Main Hoist	1	*25*	N	29,500	*13 381*
Auxiliary Hoist	1	*25*	N	29,500	*13 381*
Boomhoist	3/4	*19*	W	11,700	*5 307*
Third Drum	5/8	*16*	RB	12,900	*5 851*
Boom Pendants	1-3/8	*35*	N	n/a	n/a
Jib Pendants	3/4	*19*	N	n/a	n/a

Wire rope: types available

- Type “RB” – 18 x 19 rotation resistance, extra extra improved plow steel, preformed, right lay, regular lay, swaged.
- Type “N” – 6 X 25 (6 X 19 class), filler wire, extra improved plow steel, preformed, independent wire rope center, right lay, regular lay.
- Type “W” – 6 X 26 (6 X 19 class), extra improved plow steel, preformed, independent wire rope center, right lay, alternate lay.

Crawler Lower

Lower frame

All welded, box construction, precision machined; 13' 5" *(4.08 m)* extended or 9' 0" *(2.74 m)* retracted gauge X 21' 3" *(6.48 m)* track length.

Turntable bearing

Outer race is bolted to upper frame, inner race with internal ring gear is bolted to lower frame.

Crawler side frames

All welded, precision machined and removable; hydraulically extended or retracted by a cylinder mounted inside the lower frame.

Track drive sprockets and idler wheels

Cast steel, heat treated; sealed for lifetime lubrication.

Track rollers

Nine per side. Tractor type, oil filled for lifetime lubrication.

Track carrier rollers

Three tractor type rollers mounted on top of each crawler side frame. Oil filled for lifetime lubrication.

Tracks

Heat treated, self cleaning, multiple hinged track shoes joined by one piece full floating pins; 46 shoes per side frame; 36" *(.91 m)* wide.

Track tension adjustment - Track adjusted by hydraulic cylinders at the idler block. Tracks automatically release during excessive tension condition.

Independent travel & steering

Axial piston motor with reduction gear is located at inner drive end of each crawler side frame. Each track is driven simultaneously or individually for straight-line, gradual turn, or pivot turn. The tracks can be counterrotated for spin turns.

Brakes - Spring applied, hydraulically released multiple disc brakes are applied automatically when the control lever is in the neutral position.

Travel speed - 0.8 mph *(1.3 km/h)*

Gradeability - 30%

Jacking system

Four ground controlled, power hydraulic jacks, mounted on the lower carbody frame, raise the machine to facilitate removal or installation of the crawler sideframes.

Note: Counterweights must be removed prior to machine jacking.

Ground bearing pressure

Track shoes		Ground contact areas		Ground bearing pressure	
inches	*meters*	in^2	*cm^2*	psi	*kg/cm^2*
36	*0.91*	16,300	*105,180*	10.41	*.73*

Revolving Upperstructure

Frame

All-welded, precision machined unit.

Fuel tank

119 gallon *(450 L)* capacity.

Power transmission

All functions hydraulically powered allowing positive, precise control, with independent or simultaneous operation of all crane functions.

Engine Specifications Mitsubishi 6D24-TEB with oil filter, oil cooler, air cleaner, fuel filter, water separator, hour meter, tachometer and electrical shutdown.	
Number of cylinders	6
Bore and stroke - inch - *(mm)*	5.12" X 5.91" *(130 X 150)*
Piston displacement - (in^3) - *(cm^3)*	 729 *(11 945)*
Engine rpm at full load speed	2,000
Net engine horsepower at full load speed, (HP)	263 *(196 kw)*
Peak torque - foot pounds - *(joule)*	746 *1 011*
Peak torque - rpm	1,400
Electrical system Batteries	24 volt 2 - 12 volt

Hydraulic System

Hydraulic pumps

Two variable displacement piston pumps operating at 4,000 psi *(281 kg/cm²)* power travel, main drum, auxiliary drum, third drum and boomhoist functions. One fixed displacement gear pump operating at 3,000 psi *(211 kg/cm²)* powers swing. One fixed displacement gear pump operating at 3,600 psi *(250 kg/cm²)* powers jacking cylinders or swing. One fixed displacement gear pump operating at 1,200 psi *(85 kg/cm²)* powers pilot control system, clutches, brakes and pump controls.

Hydraulic reservoir

79 US gallon *(300 L)*, equipped with sight level gauge.

Relief valves

Each function is equipped with relief valves to protect the circuit from overload or shock.

Brake valves

Travel circuit is provided with brake valves for all terrain travel capability.

Hydraulic filtration

Ten micron, full flow line filter furnished in control circuit. All oil is filtered prior to return to sump tank.

Hydraulic motors

Main, auxiliary and third hoist drums, boom hoist, swing and travel are powered by axial piston motors.

Counterbalance valves

Hoist motors are equipped with counterbalance valves to provide positive load lowering and prevent accidental load drop when hydraulic power is suddenly reduced.

Principal Operating Functions

Control system

Remote controlled hydraulic servo for main drum, auxiliary drum, third drum and travel. Mechanical linkage controls swing. Function speed is proportional to lever movement. Levers are adjustable for operator comfort.

Load hoisting and lowering

Main and auxiliary hoist drums are driven by individual axial piston motors and reduction gearing. Load hoisting or lowering is provided by actuating or reversing a hydraulic motor. Smooth, precise, power load lowering is attained with automatic hydraulic brake. The control lever provides two speeds for hoisting and lowering. Hoisting or lowering speeds are proportional to lever movement.

Freefall - The incorporation of power hydraulic controlled, two shoe clutches allows freefall operation of the main and auxiliary hoist drums for high cycle crane and duty cycle application. Mode selection switch on control panel allows operator to select the most productive operation mode.

Load hoist drums

Main (front) and auxiliary (rear) hoist drums are 21-1/2" *(.55 m)* root diameter grooved for 1" *(25 mm)* wire rope and mounted on anti-friction bearings.

Third operating drum

Optional; Pinned to front of main frame, 12-3/4" *(.32 m)* root diameter. Hydraulic winch type power up and down standard.

Optional; Same as third drum above but with controlled free spooling for use in pile driving applications.

Drum clutches

Speed-o-Matic® power hydraulic two-shoe clutches; internal expanding, lined shoes. Clutch spiders are splined to shafts; clutch drums are integral with hoist drums.

Load hoist clutches - Front and rear main drums - clutch drums 37" *(.94 m)* diameter, 5-1/2" *(140 mm)* face width. Swept area is 638 square inches *(4 116 cm²)*.

Drum brakes

External contracting band type; operated by foot pedal equipped with a locking latch. Operator may select automatic brake mode (spring applied, hydraulically released), which will apply brakes when the hoist control lever is in the neutral position.

Drum rotation indicators

Standard for front and rear drums. Audible-type indicators.

Drum locking pawl

Standard for front and rear drums; electrically actuated and prevents drum rotation in a lowering direction.

Load indicator

Standard: PAT EI-65 load indicator for main drum. See Auxiliary Equipment on page 8 for description and other available load indicators.

Anti two-block system

Standard: A switch mounted on the boom peak activates a buzzer to warn the operator of a two-block condition and simultaneously disengages hoist function while applying the hoist brakes.

Swing system

Independent, hydraulic swing is driven by two axial piston motors through a gear reduction system.

Swing brake - Spring applied, hydraulically released; controlled by button on swing control lever.

Swing lock - Mechanically controlled, drop pin.

Swing speed - Two-speed, 1.3 / 2.5 rpm

Boomhoist/lowering system

Independent, hydraulic boomhoist is driven by an axial piston motor through a gear reduction system. Boom hoisting or lowering is performed by actuating or reversing the motor.

Boomhoist drum

Single grooved lagging 16-1/2" *(.42 m)* root diameter.

Boomhoist drum locking pawl

Electrically operated.

Boomhoist brake

Spring applied, hydraulically released, multiple disc type brake. Brake is automatically applied when control lever is in neutral position.

Boomhoist limiting device - Restricts hoisting boom beyond recommended minimum radius.

Electrical system

24 volt negative ground system, with two 12-volt batteries. Standard lighting system includes: two 70 watt headlights mounted on machine front and one interior cab light.

Operator's cab

Full vision, modular compartment with safety glass panels. The completely independent cab is insulated against noise and vibration. Sliding operator's door, swing up roof window. Standard equipment includes: heater, defroster, windshield wiper, dry chemical fire extinguisher, sun visor, bubble-type level, fuel gauge, tachometer, hydraulic temperature gauge, engine oil pressure gauge, coolant temperature gauge, service monitor system, and EI-65 load indicator system.

Machinery cab

Hinged doors (four on right side, three on left side) for machinery access. Equipped with rooftop access ladder and electric warning horn.

Catwalks

Standard on both sides. Catwalks fold up for reduced travel width.

Gantry

Retractable high gantry is power lowered to reduce height for transport. May also be used for power raising or lowering of counterweight.

Gantry bail

Pinned to retractable high gantry. Four sheaves are provided for 10-part boomhoist wire rope reeving. Sheaves mounted on anti-friction bearings, sealed for lifetime lubrication.

Counterweight

Removable, held in position by bolts. Standard counterweight lowering system consists of retractable high gantry and hydraulic cylinders.

Counterweight "A" - 24,200 lbs. *(10 977 kg)*

Counterweight "B" - *optional* - 22,500 lbs. *(10 206 kg)* Required for maximum lift crane capacities.

Booms and Jibs

Booms

Angle - Two piece basic boom 40' *(12.19 m)* long with open throat top section. Boom 48" *(1.22 m)* wide, 48" *(1.22 m)* deep at centerline of connections. Main chord angles are high strength, low alloy steel, 4" x 4" x 3/8" *(101.6 mm x 101.6 mm x 9.53 mm)*.

Base section - 20' *(6.10 m)* long. Boom feet on 61" *(1.55 m)* centers. Lifting lugs on top side of base section to attach carrying links for boom assembly.

Boom extensions - Available in 10', 20', and 30' *(3.05 m, 6.10 m, and 9.14 m)* lengths with appropriate length pendants.

Boom connections - In-line tapered pin.

Boom top section - Open throat, 20' *(6.10 m)* long.

Boompoint machinery - Four 18" *(.46 m)* root diameter head sheaves mounted on anti-friction bearings with rope and sheave guards standard for lift crane use.

Tubular - Two piece basic boom 40' *(12.19 m)* long with open throat top section. Boom 60" *(1.52 m)* wide, 50" *(1.27 m)* deep at centerline of connections. Alloy steel, round tubular chords 3" *(76 mm)* outside diameter.

Base section - 20' *(6.10 m)* long. Boomfeet on 61" *(1.55 m)* centers. Lifting lugs on top side of base section to attach carrying links for boom assembly.

Boom extensions - "H" wall chord. Available in 10', 20', and 30' *(3.05 m, 6.10 m, and 9.14 m)* lengths with appropriate length pendants.

Boom connections - In-line tapered pins.

Boom top section - Open throat; 20' *(6.10 m)* long.

Boompoint machinery - Five 21" *(.53 m)* root diameter head sheaves mounted on anti-friction bearings. Rope and sheave guards are standard.

Tubular jib

Tubular - basic two-piece 30' *(9.14 m)* long, 32" *(.81 m)* wide and 24" *(.61 m)* deep at connections. Alloy steel tubular chords 2" *(51 mm)* outside diameter. Offsettable 0, 15, or 30 degrees relative to main boom angle.

Base section -15' *(4.57 m)* long.

Jib extensions - available in 15' *(4.57 m)* lengths with appropriate length pendants.

Jib connections - In-line, tapered pin connections.

Tip section - 15' *(4.57 m)* long, one 18-1/2" *(.47 m)* root diameter sheave mounted on anti-friction bearings.

Jib mast

11' 6" *(3.51 m)* high, mounted on jib base section. Two deflector sheaves mounted within mast to guide whipline; mounted on anti-friction bearings. Two equalizer sheaves mounted on top of mast - one for jib frontstay line, one for jib backstay line.

Jib staylines - Front and rear staylines vary in length depending on degree of jib offset from boom center line: backstay lines attached at bottom end of boom top section.

Jib stops - Dual, tubular telescoping type.

Boom stops

Dual, tubular telescopic type.

Boom live mast

26' *(7.92 m)* long rectangular structure which supports boomhoist bridle, boom pendants and midpoint suspension pendants. Boom live mast may be used as a short crane boom for machine assembly or dismantling. Standard with tubular boom attachment; *optional* for angle boom attachment.

Boomhoist bridle and spreader bar

Serves as connection for boom suspension system. Bridle contains five 12" *(.30 m)* root diameter sheaves mounted on anti-friction bearings for 10-part boomhoist wire rope reeving. Auxiliary bail may be attached to bridle and contains two 15-7/8" *(.40 m)* root diameter bronze bushed sheaves to permit reeving wire rope suspension for use of boom live mast as short boom. Spreader bar provides attachment for boom main pendants and boom midpoint suspension pendants.

Deflector rollers

Deflector rollers deflect main and auxiliary load hoist wire rope over top side of boom. Rollers are mounted on anti-friction bearings. One roller on top section of basic boom and one roller per boom extension is standard for both angle and tube booms.

Auxiliary Equipment

Boom angle indicator

Pendulum type, mounted on operator's side of boom base section.

Load indicator

The **standard** PAT EI-65 load indicator for the main drum provides the operator with: main boom length, main boom angle, jib angle, jib length, operating mode, load radius, boom tip height, and anti-two block indicator.

Optional; PAT EI-65 load indicator for auxiliary drum. (Additional line rider required.)

Rated Capacity Limiters *(Optional)*

Optional; PAT DS-350 rated capacity limiter for main and auxiliary drums. (Additional line rider required for auxiliary drum.)

The optional rated capacity limiter system (RCL) provides the same information as the load indicator plus the crane's rated capacity at a particular setup with function kickout. Includes a pre-warning light, audible alarm, and overload light.

Fairlead

Optional; full revolving type with barrel, sheaves and guide rollers mounted on anti-friction bearings.

Tagline

Rud-o-Matic® model 648; spring wound, drum-type.

LS-218H Angle Boom Lift Crane/Clamshell/Dragline Capacities

Boom — Angle; Pin or Bolt connected, 48" *(1.22 m)* wide, 48" *(1.22 m)* deep with open throat top section; with or without 26' *(7.92 m)* live mast.

Mounting — crawler: extended gauge: 13' 5" *(4.08 m)*

Counterweights —
Ctwt. "A" - 24,409 lbs. *(11 072 kg)*
Ctwt. "AB" - 46,962 lbs. *(21 302 kg)*

PCSA Class 12-416
Refer to notes page 5

Maximum angle boom or boom + jib ① machine can lift off ground unassisted - without load

	Counterweight "A"				Counterweight "AB"			
	Boom		Boom + Jib		Boom		Boom + Jib	
	Feet	*meters*	Feet	*meters*	Feet	*meters*	Feet	*meters*
Over End								
Side frames extended	150	*45.72*	130 + 60	*39.62 + 18.29*	150	*45.72*	150 + 60	*45.72 + 18.29*
Side frames retracted	150	*45.72*	130 + 60	*39.62 + 18.29*	②		②	
Over Sides								
Side frames extended	150	*45.72*	130 + 60	*39.62 + 18.29*	150	*45.72*	150 + 60	*45.72 + 18.29*
Side frames retracted	130	*39.62*	100 + 60	*30.48 + 18.29*	②		②	

① With or without boom live mast and 1-3/8" *(35 mm)* diameter pendants and hook block on ground.

Maximum angle boom or boom + jib machine can lift off ground unassisted and travel without load with boom horizontal ③ - minimum travel speed on firm level supporting surface.

	Counterweight "A"				Counterweight "AB"			
	Boom		Boom + Jib		Boom		Boom + Jib	
	Feet	*meters*	Feet	*meters*	Feet	*meters*	Feet	*meters*
Over End								
Side frames extended	130	*39.62*	100 + 60	*30.48 + 18.29*	140	*42.67*	100 + 60	*30.48 + 18.29*
Side frames retracted	130	*39.62*	100 + 60	*30.48 + 18.29*	②		②	
Over Sides								
Side frames extended	120	*36.58*	90 + 60	*27.43 + 18.29*	140	*42.67*	100 + 60	*30.48 + 18.29*
Side frames retracted	110	*33.53*	80 + 60	*24.38 + 18.29*	②		②	

② With counterweight AB, machine must not be operated with side frames retracted.

③ Hook blocks carried at boom/jib point. Based on 100-ton *(90.7 metric ton)* three sheave hook block.

Working Areas

1. These lines determine the limiting position of any load for operation within working areas indicated.

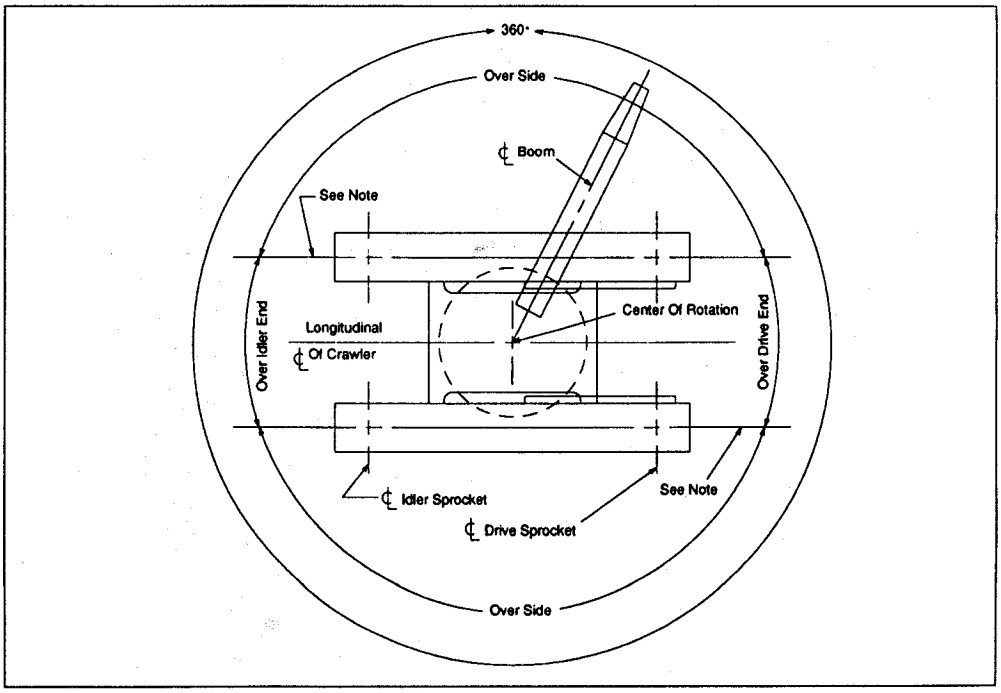

Caution: This material is for reference only. Operator must refer to in-cab capacity plate to determine allowable machine lifting capacities and operating procedures.

LS-218H Angle Boom Lift Crane/Dragline/Clamshell Capacities

Boom Length (ft.)	Load Radius (ft.)	Boom Angle (deg.)	Capacities - Side Frames Extended					
			Ctwt. A	Ctwt. AB	Dragline Ctwt. A	Clamshell & Magnet Ctwt. A	Dragline Ctwt. AB	Clamshell & Magnet Ctwt. AB
40'	12	79.3	200,000*	200,000*	29,500	29,500	29,500	29,500
(12.19 m)	13	77.9	178,100	200,000*	29,500	29,500	29,500	29,500
	14	76.4	152,400	200,000*	29,500	29,500	29,500	29,500
	15	74.9	133,100	179,100	29,500	29,500	29,500	29,500
	16	73.4	118,100	159,000	29,500	29,500	29,500	29,500
	17	71.9	106,000	142,900	29,500	29,500	29,500	29,500
	18	70.4	96,100	129,600	29,500	29,500	29,500	29,500
	19	68.9	87,900	118,600	29,500	29,500	29,500	29,500
	20	67.3	80,900	109,300	29,500	29,500	29,500	29,500
	25	59.3	57,500	78,100	29,500	29,500	29,500	29,500
	30	50.6	44,400	60,400	29,500	29,500	29,500	29,500
	35	40.5	35,800	49,000	29,500	26,900	29,500	29,500
	40	27.7	29,600	36,600	—	19,800	—	27,600
50'	12	81.5	200,000*	200,000*	29,500	29,500	29,500	29,500
(15.24 m)	13	80.3	178,100	200,000*	29,500	29,500	29,500	29,500
	14	79.2	152,400	200,000*	29,500	29,500	29,500	29,500
	15	78.0	133,100	179,100	29,500	29,500	29,500	29,500
	16	76.8	118,100	159,000	29,500	29,500	29,500	29,500
	17	75.6	106,000	142,900	29,500	29,500	29,500	29,500
	18	74.4	96,100	129,600	29,500	29,500	29,500	29,500
	19	73.3	87,900	118,600	29,500	29,500	29,500	29,500
	20	72.1	80,900	109,300	29,500	29,500	29,500	29,500
	25	65.9	57,600	78,100	29,500	29,500	29,500	29,500
	30	59.5	44,400	60,400	29,500	29,500	29,500	29,500
	35	52.5	35,800	49,100	29,500	29,500	29,500	29,500
	40	44.9	29,900	41,600	29,500	26,900	29,500	29,500
	50	24.8	22,100	30,700	—	19,800	—	27,600
60'	13	81.9	178,100	200,000*	29,500	29,500	29,500	29,500
(18.29 m)	14	81.0	152,400	200,000*	29,500	29,500	29,500	29,500
	15	80.0	133,100	179,000	29,500	29,500	29,500	29,500
	16	79.0	118,000	158,900	29,500	29,500	29,500	29,500
	17	78.1	105,900	142,800	29,500	29,500	29,500	29,500
	18	77.1	96,000	129,500	29,500	29,500	29,500	29,500
	19	76.1	87,800	118,500	29,500	29,500	29,500	29,500
	20	75.1	80,800	109,200	29,500	29,500	29,500	29,500
	25	70.1	57,400	77,900	29,500	29,500	29,500	29,500
	30	64.9	44,200	60,200	29,500	29,500	29,500	29,500
	35	59.6	35,600	48,800	29,500	29,500	29,500	29,500
	40	53.8	29,700	40,900	29,500	26,700	29,500	29,500
	50	40.8	21,900	30,500	21,900	19,700	29,500	27,400
	60	22.6	17,000	24,000	—	15,300	—	21,600
70'	15	81.5	133,000	179,000	29,500	29,500	29,500	29,500
(21.34 m)	16	80.6	117,900	158,800	29,500	29,500	29,500	29,500
	17	79.8	105,800	142,600	29,500	29,500	29,500	29,500
	18	79.0	95,900	129,400	29,500	29,500	29,500	29,500
	19	78.1	87,600	118,400	29,500	29,500	29,500	29,500
	20	77.3	80,600	109,000	29,500	29,500	29,500	29,500
	25	73.1	57,200	77,700	29,500	29,500	29,500	29,500
	30	68.7	43,900	60,000	29,500	29,500	29,500	29,500
	35	64.3	35,400	48,600	29,500	29,500	29,500	29,500
	40	59.6	29,400	40,600	29,400	26,400	29,500	29,500
	50	49.6	21,600	30,300	21,600	19,400	29,500	27,200
	60	37.7	16,800	23,800	16,800	15,100	23,800	21,400
	70	20.9	13,400	19,300	—	12,000	—	17,300
80'	17	81.1	105,700	142,500	29,500	29,500	29,500	29,500
(24.38 m)	18	80.4	95,700	129,300	29,500	29,500	29,500	29,500
	19	79.6	87,500	118,200	29,500	29,500	29,500	29,500

Boom Length (ft.)	Load Radius (ft.)	Boom Angle (deg.)	Capacities - Side Frames Extended					
			Ctwt. A	Ctwt. AB	Dragline Ctwt. A	Clamshell & Magnet Ctwt. A	Dragline Ctwt. AB	Clamshell & Magnet Ctwt. AB
80'	20	78.9	80,400	108,800	29,500	29,500	29,500	29,500
(24.28 m)	25	75.2	57,000	77,500	29,500	29,500	29,500	29,500
con't	30	71.5	43,700	59,800	29,500	29,500	29,500	29,500
	35	67.7	35,100	48,400	29,500	29,500	29,500	29,500
	40	63.7	29,200	40,400	29,200	26,200	29,500	29,500
	50	55.4	21,400	30,000	21,400	19,200	29,500	27,000
	60	46.2	16,500	23,500	16,500	14,800	23,500	21,100
	70	35.2	13,200	19,100	13,200	11,800	19,100	17,100
	80	19.5	10,700	15,800	—	9,600	—	14,200
90'	18	81.4	95,600	129,100	29,500	29,500	29,500	29,500
(27.43 m)	19	80.8	87,300	118,000	29,500	29,500	29,500	29,500
	20	80.1	80,200	108,600	29,500	29,500	29,500	29,500
	25	76.9	56,800	77,300	29,500	29,500	29,500	29,500
	30	73.6	43,500	59,500	29,500	29,500	29,500	29,500
	35	70.3	34,900	48,100	29,500	29,500	29,500	29,500
	40	66.8	28,900	40,100	28,900	26,000	29,500	29,500
	50	59.7	21,500	29,700	21,500	19,300	29,500	26,700
	60	52.0	16,200	23,200	16,200	14,500	23,200	20,800
	70	43.4	12,900	18,300	12,900	11,600	18,300	16,400
	80	33.1	10,500	15,500	—	9,400	—	13,900
	90	18.4	8,600	13,100	—	7,700	—	11,700
100'	20	81.1	80,100	108,400	29,500	29,500	29,500	29,500
(30.48 m)	25	78.2	56,500	77,100	29,500	29,500	29,500	29,500
	30	75.3	43,200	59,300	29,500	29,500	29,500	29,500
	35	72.3	34,600	47,800	29,500	29,500	29,500	29,500
	40	69.3	28,600	39,900	28,600	25,700	29,500	29,500
	50	63.0	20,800	29,400	20,800	18,700	29,400	26,400
	60	56.4	15,900	22,900	15,900	14,300	22,900	20,600
	70	49.2	12,600	18,500	12,600	11,300	18,500	16,600
	80	41.1	10,200	15,300	10,200	9,100	15,300	13,700
	90	31.3	8,300	12,800	—	7,400	—	11,500
	100	17.4	6,900	10,900	—	6,200	—	9,800
110'	25	79.3	56,300	76,800	—	—	—	—
(33.35 m)	30	76.6	43,000	59,000	—	—	—	—
	35	74.0	34,400	47,600	—	—	—	—
	40	71.2	28,400	39,600	—	—	—	—
	50	65.6	20,500	29,100	—	—	—	—
	60	59.8	15,700	22,600	—	—	—	—
	70	53.5	12,300	18,200	—	—	—	—
	80	46.7	9,900	15,000	—	—	—	—
	90	39.1	8,000	12,500	—	—	—	—
	100	29.8	6,600	10,600	—	—	—	—
	110	16.6	5,400	9,000	—	—	—	—
120'	25	80.2	56,100	76,600	—	—	—	—
(36.58 m)	30	77.8	42,700	58,800	—	—	—	—
	35	75.3	34,100	47,300	—	—	—	—
	40	72.8	28,100	39,300	—	—	—	—
	50	67.8	20,200	28,900	—	—	—	—
	60	62.5	15,400	22,300	—	—	—	—
	70	57.0	12,000	17,900	—	—	—	—
	80	51.1	9,600	14,700	—	—	—	—
	90	44.6	7,700	12,200	—	—	—	—
	100	37.3	6,300	10,300	—	—	—	—
	110	28.6	5,100	8,700	—	—	—	—
	120	15.9	4,100	7,400	—	—	—	—
130'	25	81.0	55,800	76,400	—	—	—	—
(39.62 m)	30	78.7	42,400	58,500	—	—	—	—

Boom Length (ft.)	Load Radius (ft.)	Boom Angle (deg.)	Capacities - Side Frames Extended					
			Ctwt. A	Ctwt. AB	Dragline Ctwt. A	Clamshell & Magnet Ctwt. A	Dragline Ctwt. AB	Clamshell & Magnet Ctwt. AB
130'	35	76.5	33,800	47,000	—	—	—	—
(39.62 m)	40	74.2	27,800	39,000	—	—	—	—
con't	50	69.6	20,000	28,600	—	—	—	—
	60	64.8	15,100	22,000	—	—	—	—
	70	59.8	11,700	17,600	—	—	—	—
	80	54.5	9,300	14,400	—	—	—	—
	90	48.9	7,400	11,900	—	—	—	—
	100	42.8	6,000	10,000	—	—	—	—
	110	35.8	4,800	8,400	—	—	—	—
	120	27.4	3,800	7,100	—	—	—	—
	130	15.3	3,000	6,000	—	—	—	—
140'	30	79.5	42,200	55,800*	—	—	—	—
(42.67 m)	35	77.5	33,500	46,800	—	—	—	—
	40	75.4	27,500	38,700	—	—	—	—
	50	71.1	19,700	28,300	—	—	—	—
	60	66.7	14,800	21,700	—	—	—	—
	70	62.1	11,400	17,300	—	—	—	—
	80	57.4	9,000	14,000	—	—	—	—
	90	52.4	7,100	11,600	—	—	—	—
	100	47.0	5,700	9,600	—	—	—	—
	110	41.2	4,500	8,100	—	—	—	—
	120	34.5	3,500	6,800	—	—	—	—
	130	26.4	2,700	5,700	—	—	—	—
	140	14.7	2,000	4,500	—	—	—	—
150'	30	80.2	41,900	46,800*	—	—	—	—
(45.72 m)	35	78.3	33,300	40,400*	—	—	—	—
	40	76.3	27,200	34,800*	—	—	—	—
	50	72.4	19,400	26,100*	—	—	—	—
	60	68.3	14,500	20,200*	—	—	—	—
	70	64.1	11,100	15,700*	—	—	—	—
	80	59.8	7,800	12,700*	—	—	—	—
	90	55.3	6,800	10,500*	—	—	—	—
	100	50.5	5,300	8,600*	—	—	—	—
	110	45.4	4,200	7,100*	—	—	—	—
	120	39.7	3,200	6,000*	—	—	—	—
	130	33.3	2,400	5,100*	—	—	—	—
	140	25.5	—	4,400*	—	—	—	—
	150	14.2	—	3,200*	—	—	—	—

LS-218H Angle Boom Lift Crane/Dragline/Clamshell Notes

General:

1. Rated lifting capacities in pounds as shown on lift charts pertain to the crane as originally manufactured and normally equipped. Modifications to the crane or use of optional equipment other than that specified can result in a reduction of capacity.
2. Construction equipment can be dangerous if improperly operated or maintained. Operation and maintenance of the crane must be in compliance with the information in the Operator's, Parts and Safety Manuals supplied with the crane. If these manuals are missing, order replacements through the distributor.
3. The operator and other personnel associated with the crane shall read and fully understand the latest applicable American National Standards Institute (ANSI) safety standards for cranes.
4. The maximum allowable lifting capacities are based on crane standing level on firm supporting surface.

Lift Crane Operation:

1. Capacities shown are in pounds and are not more than 75% of the tipping loads with the crane standing level on firm supporting surface. A deduction must be made from these capacities for weight of hook block, hook, sling, grapple, load weighing device, etc. When using main hook while jib is attached, reduce capacities by values shown on jib capacity chart. See Operator's Manual for all limitations when raising or lowering attachment.
2. The capacities marked with an asterisk (*) are based on factors other than those which would cause a tipping condition.
3. Retractable high gantry must be used in the elevated position for all capacities on this chart.
4. For recommended reeving, parts of line, wire rope type and wire rope inspection, see wire rope strength chart, Operator's Manual and Parts Manual.
5. Load ratings are based on freely suspended loads and make no allowances for such factors as the effect of the wind, ground conditions, and operating speeds. The operator shall therefore reduce load ratings in order to take these conditions into account.
6. The least stable rated condition is over the side.
7. Boom lengths exceeding 120' *(36.58 m)* must be erected and lowered over the end. Adequate blocking must be placed under the tread member sprockets to prevent the machine from rocking.
8. Machine with "AB" counterweight - do not swing over side until side frames are extended.
9. When machine is equipped with carbody jack cylinders, cylinders must be fully retracted when machine is operated.
10. These capacities apply only to the crane as originally manufactured and normally equipped by Link-Belt Construction Equipment Company.

Dragline/Clamshell Operation:

1. Capacities shown are the maximum allowable and are based on the machine standing level on firm supporting surface under ideal job conditions.
2. Weight of bucket, plus load should not exceed these capacities.
3. Capacities are maximum recommended by PCSA Standard #4. User must make allowances for soft or uneven supporting surfaces, rapid cycle operations, bucket suction or other unfavorable conditions which may require smaller buckets for efficient operation.
4. Dragline operation with boom angle less than 35° is not recommended.
5. Boom length for dragline/clamshell attachment operation should not exceed 100' *(30.48 m)*.

LS-218H Angle Boom Working Range

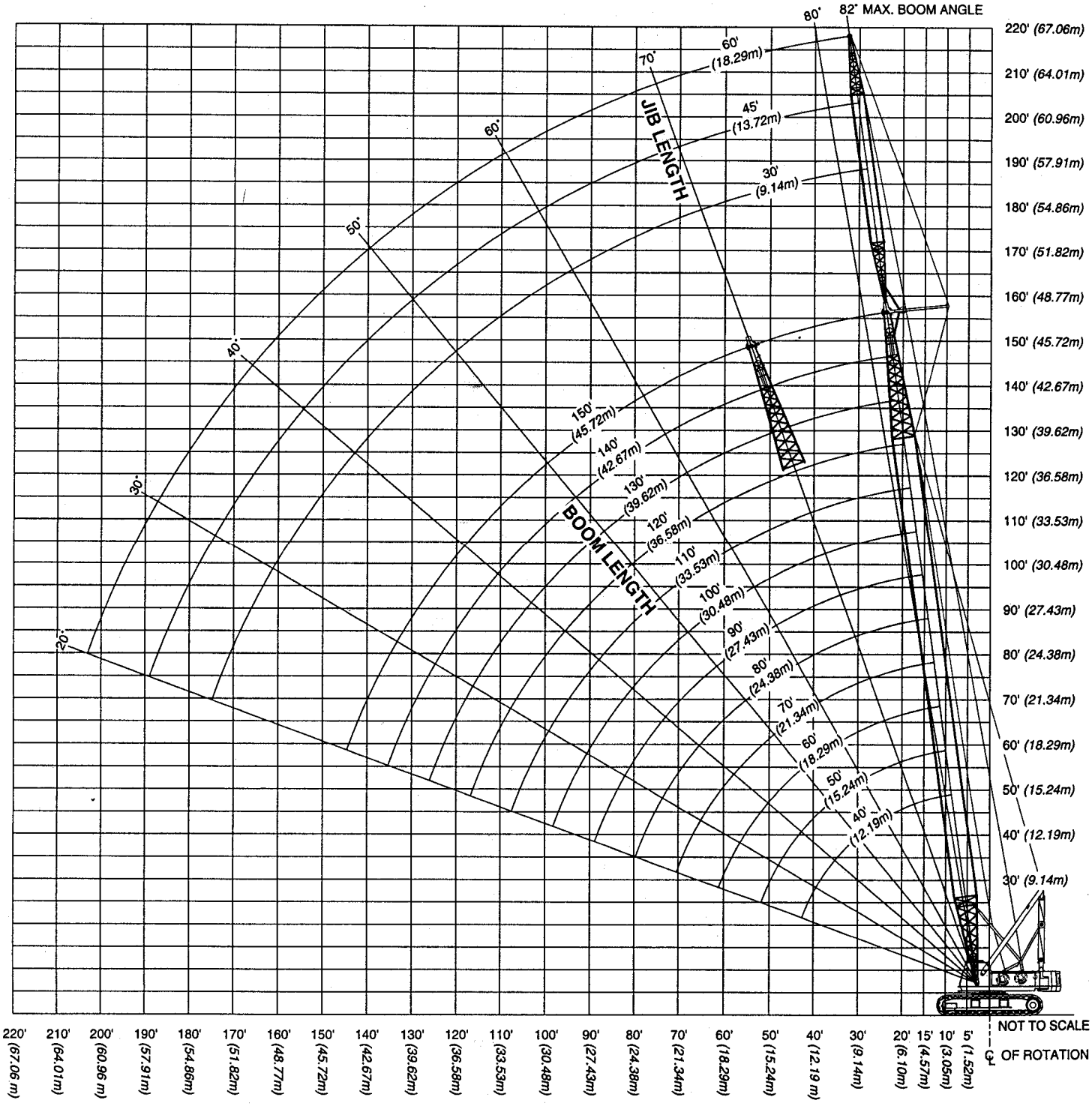

OPERATING RADIUS

Diesel Pile Hammers

Metric Units - US Units

Diesel Pile Hammers

Technical Data

		D6-32	D8-22	D12-42	D16-32
Impact weight (piston)	kg lbs	600 1,320	800 1,765	1280 2,820	1600 3,530
Energy per blow max. - min.	kNm ft-lbs	19-9 14,015-6,640	27-13 19,915-9,590	46-20 33,930-14,750	54-25 39,830-18,440
Number of blows	min-1	38-52	36-52	35-52	36-52
Suitable for driving piles (depending on soil and pile)	kg lbs	300 - 2000 660-4,400	500-3000 1,100-6,600	800-5000 1,760-11,000	1000-6000 2,200-13,200
Consumption					
Diesel oil	l/h gal/h	3,7 0.81	4 0.88	4,5 1	5 1.1
Lubricant	l/h gal/h	0,25 0.05	0,5 0.11	0,5 0.11	0,5 0.11
Tank capacity					
Diesel oil tank	l gal	19 5	20 5.3	25 6.6	32 8.45
Lube tank	l gal	5 1.3	6 1.58	6,5 1.7	9 2.4
Max. rope diameter for deflector sheave of tripping device	mm in	20 0.78	20 0.78	20 0.78	20 0.78
Max. inclined pile driving without / with extension		1:3 / -	1:2 / -	1:5 / 1:1	1:5 / 1:1
Weight					
Diesel pile hammer	kg lbs	1620 3,570	1935 4,265	2735 6,030	3620 7,980
Tripping device	kg lbs	114 250	114 250	114 250	114 250

Technical Data

		D19-42	D25-32	D30-32
Impact weight (piston)	kg lbs	1820 4,010	2500 5,510	3000 6,610
Energy per blow max. - min.	kNm ft-lbs	66-29 48,680-21,390	90-40 66,380-29,500	103-48 75,970-35,400
Number of blows	min-1	35-52	35-52	36-52
Suitable for driving piles (depending on soil and pile)	kg lbs	1100-6000 2,420-13,200	1600-7500 3,530-16,535	2000-9000 4,410-19,840
Consumption				
Diesel oil	l/h gal/h	7,5 1.65	7,5 1.65	10 2.2
Lubricant	l/h gal/h	0,5 0.11	0,6 0.13	1 0.22
Tank capacity				
Diesel oil tank	l gal	32 8.45	67 17.7	67 17.7
Lube tank	l gal	9 2.4	19 5	19 5
Max. rope diameter for deflector sheave of tripping device	mm in	20 0.78	22 0.87	22 0.87
Max. inclined pile driving without / with extension		1:5 / 1:1	1:5 / 1:1	1:5 / 1:1
Weight				
Diesel pile hammer	kg lbs	3840 8,465	5670 12,500	6170 13,600
Tripping device	kg lbs	114 250	186 410	186 410

Diesel Pile Hammers

DELMAG

Dimensions

		D6-32	D8-22	D12-42	D16-32	D19-42	D25-32	D30-32
A	mm	4300	4700	4770	5160	5160	5500	5500
B	mm	350	350	400	440	440	560	560
C	mm	465	410	440	480	480	670	670
D	mm	320	320	320	320	320	540	540
E	mm	310	315	335	345	345	405	405
F	mm	245	245	245	280	280	235	235
G	mm	590	590	610	700	700	780	780
H	mm	320	320	340	355	360	435	435

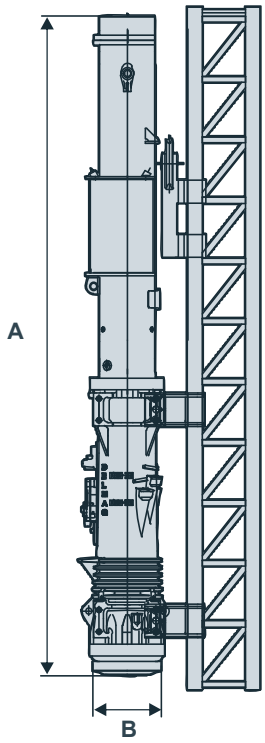

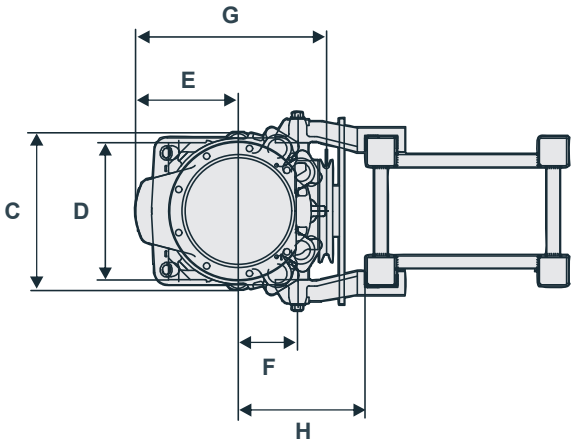

Dimensions

		D6-32	D8-22	D12-42	D16-32	D19-42	D25-32	D30-32
A	in	170	185	188	203	203	216.5	216.5
B	in	13.8	13.8	15.8	17.3	17.3	22	22
C	in	18.3	16.15	17.3	18.9	18.9	26.4	26.4
D	in	12.6	12.6	12.6	12.6	12.6	21.3	21.3
E	in	12.2	12.4	13.2	13.6	13.6	16	16
F	in	9.7	9.7	9.7	11	11	9.3	9.3
G	in	23.3	23.3	24	27.5	27.5	30.7	30.7
H	in	12.6	12.6	13.4	14	14.2	17.1	17.1

Diesel Pile Hammers

Technical Data

		D36-32	D46-32	D62-22	D80-23
Impact weight (piston)	kg lbs	3600 7,940	4600 10,140	6200 13,640	8000 17,600
Energy per blow max. - min.	kNm ft-lbs	123-56 90,720-41,300	166-71 122,435-52,370	224-107 165,215-78,920	288-171 212,420-126,125
Number of blows	min-1	36-53	35-53	35-50	35-45
Suitable for driving piles (depending on soil and pile)	t US tons	2,5-12 2.2-13.2	3-16 3.3-17.6	4-30 4.4-33.1	6-60 6.6-66.1
Consumption					
Diesel oil	l/h gal/h	11,5 2.53	16 3.52	20 4.4	25 5.5
Lubricant	l/h gal/h	1,5 0.33	1,5 0.33	2 0.44	2,6 0.57
Tank capacity					
Diesel oil tank	l gal	89 23.5	89 23.5	98 25.9	155 40.9
Lube tank	l gal	17 4.5	17 4.5	31,5 8.3	32 8.5
Max. rope diameter for deflector sheave of tripping device (* reeved twice)	mm in	38 1.5	38 1.5	38 1.5	30* 1.2*
Max. inclined pile driving without / with extension		1:5 / 1:1	1:5 / 1:1	1:2 / 1:1	1:5 / 1:2
Weight					
Diesel pile hammer	kg lbs	8200 18,060	9300 20,485	12250 26,950	16905 37,190
Tripping device	kg lbs	450 992	450 992	450 992	750 1,650

Technical Data

		D100-13	D150-42	D200-42
Impact weight (piston)	kg lbs	10000 22,000	15000 33,000	20000 44,000
Energy per blow max. - min.	kNm ft-lbs	360-214 265,520-157,840	512-329 377,630-242,660	682-436 503,036-321,580
Number of blows	min-1	35-45	36-45	36-45
Suitable for driving piles (depending on soil and pile)	t US tons	7-100 7.7-110.2	12-160 13.2-176.4	14-250 15.4-275.6
Consumption				
Diesel oil	l/h gal/h	30 6.6	50 11	60 13.2
Lubricant	l/h gal/h	2,6 0.57	4,8 1	5,8 1.3
Tank capacity				
Diesel oil tank	l gal	155 40.9	310 81.9	430 113.6
Lube tank	l gal	32 8.5	45 11.9	80 21.1
Max. rope diameter for deflector sheave of tripping device (* reeved twice)	mm in	30* 1.2*	36* 1.4*	36* 1.4*
Max. inclined pile driving without / with extension		1:5 / 1:2	1:5 / 1:2	1:5 / 1:3
Weight				
Diesel pile hammer	kg lbs	20720 45,585	28450 62,590	51800 113,960
Tripping device	kg lbs	750 1,650	1850 4,070	1850 4,070

Diesel Pile Hammers

DELMAG

Dimensions

		D36-32	D46-32	D62-22	D80-23	D100-13	D150-42	D200-42
A	mm	5470	5470	5910	7200	7358	7490	8175
B	mm	660	660	710	820	820	990	1250
C	mm	800	800	800	890	890	1280	1425
D	mm	640	640	560	800	800	1110	1425
E	mm	445	445	490	550	550	720	730
F	mm	275	275	380	350	350	375	580
G	mm	950	950	970	1110	1110	1450	1890
H	mm	500	500	500	660	660	900	1050

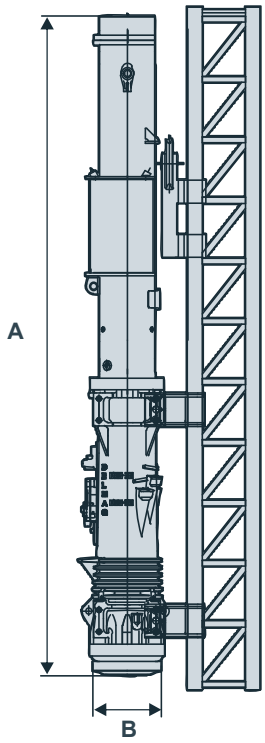

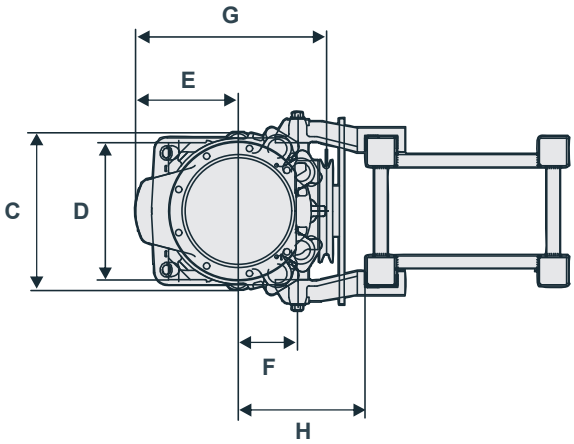

Dimensions

		D36-32	D46-32	D62-22	D80-23	D100-13	D150-42	D200-42
A	in	215.4	215.4	232.7	283.7	289.9	294.9	322.1
B	in	26	26	28	32.3	32.3	39	49.3
C	in	31.4	31.4	31.5	35.1	35.1	50.4	56.2
D	in	25.2	25.2	22	31.5	31.5	43.7	56.2
E	in	17.5	17.5	19.3	21.7	21.7	28.4	28.8
F	in	10.8	10.8	15	13.8	13.8	14.8	22.9
G	in	37.4	37.4	38.2	43.7	43.7	57.1	74.5
H	in	19.7	19.7	19.7	26	26	35.5	41.4

Diesel Pile Hammers

Technical Data

		D260-32	D300-32	D400-32
Impact weight (piston)	kg lbs	26000 57,320	30000 66,140	40000 88,190
Energy per blow max. - min.	kNm ft-lbs	865-556 638,000 - 410,100	1002-641 739,000 - 472,800	1335-855 984,600 - 630,600
Number of blows	min-1	36-45	36-45	36-45
Suitable for driving piles (depending on soil and pile)	t US tons	26-280 28.7 - 308.6	28-320 30.9 - 352.7	45-420 49.6 - 463.0
Consumption				
Diesel oil	l/h gal/h	72 19.0	85 22.5	112 29.6
Lubricant	l/h gal/h	6 1.6	6 1.6	6 1.6
Tank capacity				
Diesel oil tank	l gal	550 145.3	550 145.3	800 211.3
Lube tank	l gal	80 21.1	80 21.1	90 23.8
Max. rope diameter for deflector sheave of tripping device (* reeved twice)	mm in	40* 1.6*	40* 1.6*	40* 1.6*
Max. inclined pile driving without / with extension		1:5 / -	1:5 / -	1:5 / -
Weight				
Diesel pile hammer	kg lbs	53500 117,950	59500 131,180	79500 175,270
Tripping device	kg lbs	2450 5,400	2450 5,400	2450 5,400

Dimensions

		D260-32	D300-32	D400-32		D260-32	D300-32	D400-32
A	mm	7890	7965	8205	in	310.6	313.6	323.0
B	mm	1300	1320	1495	in	51.2	52.0	58.9
C	mm	1400	1445	1785	in	55.1	56.9	70.3
D	mm	1275	1275	1560	in	50.2	50.2	61.4
E	mm	875	895	1055	in	34.4	35.2	41.5
F	mm	445/545	445/545	505/605/705	in	17.5/21.5	17.5/21.5	19.9/23.8/27.8
G	mm	1880	1945	2240	in	74.0	76,6	88.2
H	mm	1300	1400	1500	in	51.2	55.1	59.1

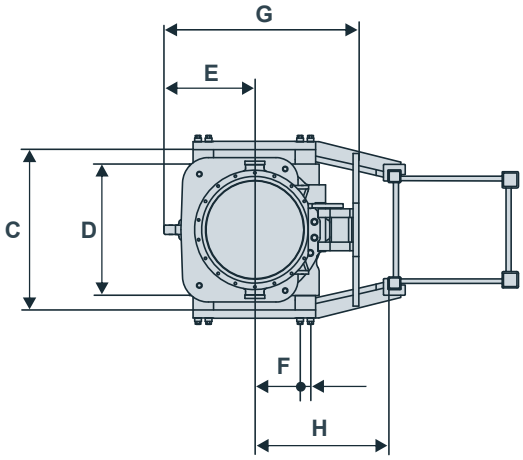

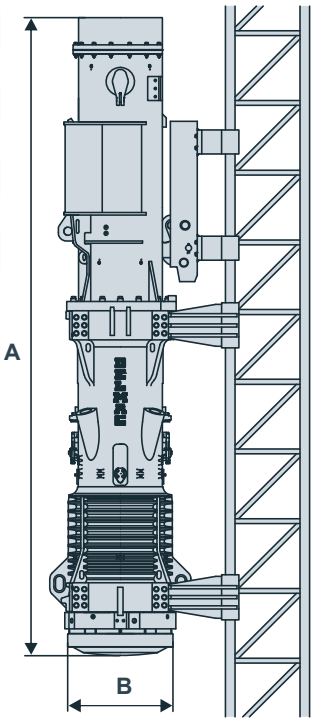

Diesel Pile Hammers

DELMAG

Technical Data

Diesel pile hammer with hydraulic starting device

		D12-52	D19-52	D25-52	D30-52
Impact weight (piston)	kg lbs	1280 2,820	1820 4,010	2500 5,510	3000 6,610
Energy per blow max. - min.	kNm ft-lbs	46-20 33,930-14,750	66-29 48,680-21,390	90-40 66,380-29,500	103-48 75,970-35,400
Number of blows	min-1	35-52	35-52	35-52	36-52
Suitable for driving piles (depending on soil and pile)	kg lbs	800-5000 1,760-11,000	1100-6000 2,420-13,200	1600-7500 3,530-16,535	2000-9000 4,410-19,840
Consumption					
Diesel oil	l/h gal/h	4,5 1	7,5 1.65	7,5 1.65	10 2.2
Lubricant	l/h gal/h	0,5 0.11	0,5 0.11	0,6 0.13	1 0.22
Tank capacity					
Diesel oil tank	l gal	25 6.6	32 8.45	67 17.7	67 17.7
Lube tank	l gal	6,5 1.7	9 2.4	19 5	19 5
Max. rope diameter for deflector sheave of tripping device	mm in	20 0.78	20 0.78	22 0.87	22 0.87
Max. inclined pile driving without / with extension		1:5 / 1:1	1:5 / 1:1	1:5 / 1:1	1:5 / 1:1
Weight					
Diesel pile hammer with hydraulic starting device, without guidings	kg lbs	3500 7,720	4100 9,040	6380 14,070	6880 15,170

Dimensions

		D12-52	D19-52	D25-52	D30-52		D12-52	D19-52	D25-52	D30-52
A	mm	5500	5500	5650	5650	in	216.5	216.5	222.4	222.4
B	mm	440	440	560	560	in	17.3	17.3	22	22
C	mm	485	485	640	640	in	19.1	19.1	25.2	25.2
D	mm	320	320	540	540	in	12.6	12.6	21.3	21.3
E	mm	345	345	405	405	in	13.6	13.6	15.9	15.9
F	mm	280	280	235	235	in	11	11	9.3	9.3
G	mm	730	680	880	880	in	28.7	26.8	34.6	34.6
H	mm	500	500	500	500	in	19.7	19.7	19.7	19.7

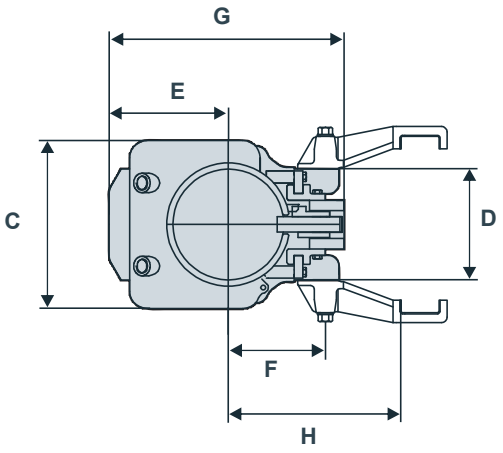

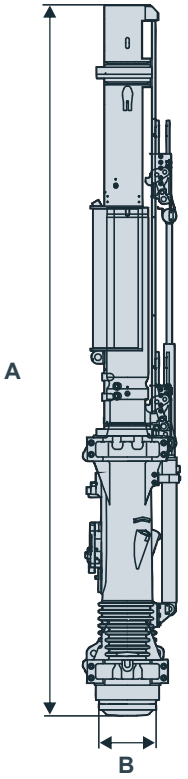

Marken der
Brands of ABI Gruppe

For further informations please contact your DELMAG sales assistant. Or you visit us on the Internet at www.delmag.de. Design subject to modifications. The details in this leaflet have to be regarded as approximate. The illustrations also can contain special outfits which are not part of the standard scope of supply. Not represented equipment variants can lead to modifications of the technical data. The reproduction and utilization of this document, even in form of excerpts, without express authorization is prohibited. Offenders will be held liable for the payment of damages.

DELMAG GmbH & Co. KG
Max-Planck-Str. 3
73730 Esslingen
Germany

Telefon: +49 (0) 711 3100-0
Telefax: +49 (0) 711 3100-119
eMail: info@delmag.de
Web: www.delmag.de

www.abi-group.com

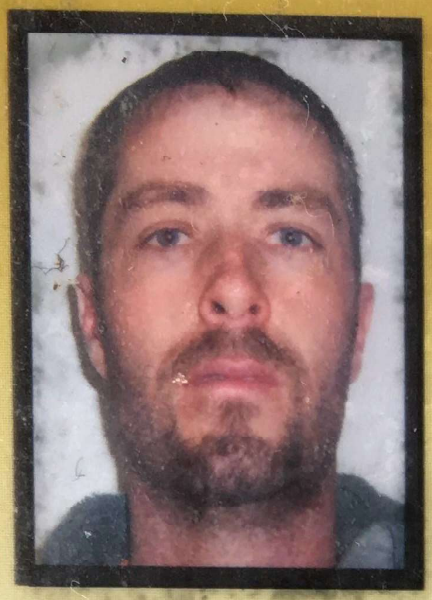

NCCCO CERTIFIED

Operator

Certification #: 130386449R

Certification Designations:
LBC

Issued to: MARK WORKMAN

Issued: 03/31/2018 **Expires: 03/31/2023**

Thom Sicklesteel, President, NCCCO Board of Directors

Graham Brent, Chief Executive Officer, NCCCO

Verify cardholder status at www.verifycco.org. Subject to provisions of suspension or revocation.

National Commission for the Certification of Crane Operators

STRUCTURES, INC.

Procedure Qualification Record (PQR)

PQR No: SI-18-AWS-D1.1-SMAW-(1) Revision: 0 Date: 2/2/2018 By: Chris Mohrbach
Authorized By: Mark Workman Date: 2/2/2018
Welding Process(es): SMAW Type: Manual X Machine ___ Auto ___ Semi-Auto ___
Reference WPS No.: SI-18-AWS-D1.1-SWAW-(1)A

JOINT

Type: Single "V" Groove
Backing: Yes ___ No X Single Weld X Doulble Weld ___
Backing Material: n/a
Root Opening (R): .062" Root Face Dimension: .062"
Groove Angle (a): 60 Degs. Radius (J-U): ___
Back Gouge Yes ___ No X
Method: n/a

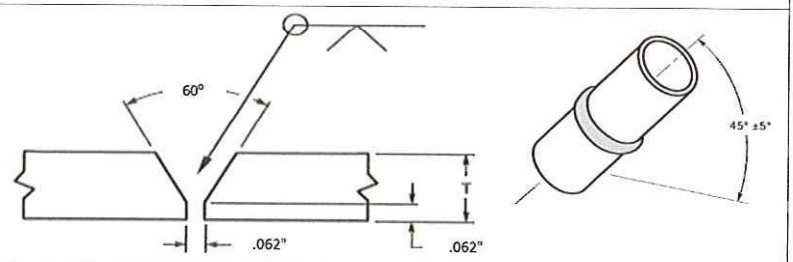

BASE MATERIAL

Material Spec: ASTM A106 To ASTM A106
Type or Group: Group I To Group I
Thickness (T): Groove (in) .710"
Fillet (in) n/a
Diameter (Pipe, in): 4.5" Sch DBL E.H. (XXH)

FILLER METALS

AWS Specification: AWS A5.1
AWS Classification: E6010(F3) & E7018(F4)
Dia. Of Filler Metal: E6010(3/32"), E7018(3/32" & 1/8")

SHIELDING

Flux: n/a Gas: n/a
Composition: n/a
Electrode-flux (class): n/a Flow Rate: n/a
Gas Cup Size: n/a

PREHEAT

Preheat Temp. Min: 70 Deg F.
Interpass Temp. Min: 32 Deg F. Max: n/a

POSTWELD HEAT TREATMENT PWHT: n/a

Temp: n/a Time: n/a

POSITION

Position of Groove: 6G Fillet: n/a
Weld Progression Down X(E6010) Up X(E7018)

ELECTRICAL CHARACTERISTICS

Transfer Mode (GMAW) n/a
Short-Circuiting ___ Globular ___ Spray ___
Current: AC ___ DCEP X DCEN ___ Pulsed ___
Other: n/a
Tungsten Electrode (GTAW)
Size: n/a Type: n/a

TECHNIQUE

Stringer or Weave Bead: Stringer
Multi-pass or Single Pass (per side): Multi-Pass
Number of Electrodes: 2
Electrode Spacing: Longitudinal: n/a
Lateral: n/a
Angle: n/a
Contact Tube to Work Distance: n/a
Peening: n/a
Interpass Cleaning: Wire Brush / Mechanical Grind

WELDING PROCEDURE

Layer/pass	Process	Filler Metal Class	Diameter	Cur. Type	Amps	Volts	Travel Speed	Other Notes
Root	SMAW	E6010	1/8"	DCEP	85	21	7	
Hot Pass	SMAW	E6010	1/8"	DCEP	85	21	7	
Fill	SMAW	E7018	3/32"	DCEP	95	22	8	
Cover	SMAW	E7018	1/8"	DCEP	110	24	9	

AWS®
Christopher J Mohrbach
CWI 02110871
QC1 EXP. 11/1/2020

If welding is required, please provide current welding logs

STRUCTURES, INC.

Procedure Qualification Record (PQR)

SI-18-AWS-D1.1-SMAW-(1)

TENSILE TEST(S)

Specimen No.	Width	Thickness	Area	Ultimate tensile load, lb	Ultimate unit stress, psi	Character of failure & location
T1	.750"	.710"	0.5325	39,000	73,239	Base material
T2	.748"	.710"	0.531	41,000	77,212	Base material

GUIDED BEND TEST(S)

Specimen No.	Type of Bend	Result	Remarks
S1	Side	Pass	n/a
S2	Side	Pass	n/a
S3	Side	Pass	n/a
S4	Side	Pass	n/a

VISUAL INSPECTION

Appearance: Satisfactory
Undercut: None
Piping porosity: None
Convexity: None
Test Date: 2/2/2018
Witnessed by: n/a

OTHER TESTING

n/a

RADIOGRAPHIC-ULTRASONIC EXAMINATION X(RT)

RT Report No.: ITC-2-8-18 Result: Pass
UT Report No.: Result:

FILLET WELD TEST RESULTS n/a

Minimum size multiple pass _____ Minimum size single pass _____

Macro Etch: Macro Etch:

1 _____ 3 _____ 1 _____ 3 _____
2 _____ 4 _____ 2 _____ 4 _____

ALL-WELD METAL TENSION TEST n/a

Tensile strength, psi:
Yield point/strength, psi:
Elongation in 2 in., %:
Laboratory test no.:

Welder's name: Mark Workman Clock no.: _____ Stamp no.: MW

Test conducted by: Western States Inspection Company Laboratory Test No.: 87-18
Per: Chris Mohrbach (AWS-CWI)
AWS-CWI #02110871

Christopher J Mohrbach
CWI 02110871
QC1 EXP. 11/1/2020

We, the undersigned, certify that the statements in this record are correct and that the test welds were prepared, welded, and tested in accordance with the requirements of Clause 4 & 9 of AWS D1.1 (2015) *Structural Welding Code-Steel.*

Manufacturer: STRUCTURES, INC. By: Mark Workman Date: February 2, 2018

WSIC
(303-929-5750)

STRUCTURES, INC.

Welding Procedure Specification (WPS)

WPS No: SI-18-AWS-D1.1-SMAW-(1)A Revision: 0 Date: 2/2/2018 By: Chris Mohrbach

Authorized By: Mark Workman Date: 2/2/2018

Welding Process(es): SMAW Type: Manual X Machine ___ Auto ___ Semi-Auto ___

Supporting PQR No.: SI-18-AWS-D1.1-SMAW-(1)

JOINT

Type: Single "V" Groove

Backing: Yes X No X Single Weld X Doulble Weld ___

Backing Material: Any Group I or II Material

Root Opening (R): .062" (+ .062") Root Face Dim. (RF): .062" (+/- .062")

Groove Angle (a): 60 Degs. (+/-5 Degs.) Radius (J-U): n/a

Back Gouge Yes X No X

Method: Mechanical or ACC

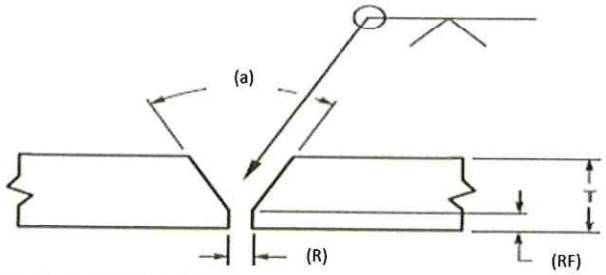

BASE MATERIAL

Material Spec:	AWS D1.1 Group I or II	To	AWS D1.1 Group I or II
Type or Group:	All	To	All
Thickness (T): Groove (in)	.355"	-	1.42"
Fillet (in)	.125"	-	Unlimited
Diameter (Pipe, in)	4.5"	-	Over

FILLER METALS

AWS Specification: AWS A5.1

AWS Classification: E6010(F3) / E7018(F4)

SHIELDING

Flux: n/a Gas: n/a

Composition: n/a

Electrode-flux (class): n/a Flow Rate: n/a

Gas Cup Size: n/a

PREHEAT

Preheat temp minimum: 70 Degrees F. if material is below 32 Deg F.

Preheat temp for the following thicknesses per catagory. A & B(Table 3.3):

SMAW electrodes:	*Low-Hydrogen*	*Other than Low Hydrogen*
Thickness up to 3/4"	32 Deg F.	32 Deg F.
Over 3/4" to 1-1/2"	50 Deg F.	150 Deg F.
Over 1-1/2" to 2-1/2"	150 Deg F.	225 Deg F.
Over 2-1/2"	225 Deg F.	300 Deg F.

Interpass Temp. Min: 32 Degrees F. Max: n/a

POSITION

Position of Groove: All Fillet: All

Weld Progression Down X(E6010) Up X(E7018)

ELECTRICAL CHARACTERISTICS

Transfer Mode (GMAW) n/a

Short-Circuiting ___ Globular ___ Spray ___

Current: AC ___ DCEP X DCEN ___ Pulsed ___

Other: n/a

Tungsten Electrode (GTAW)

Size: n/a Type: n/a

TECHNIQUE

Stringer or Weave Bead: Both

Multi-pass or Single Pass (per side): Both

Number of Electrodes: 2

Electrode Spacing: Longitudinal: n/a

Lateral: n/a

Angle: n/a

Contact Tube to Work Distance: n/a

Peening: n/a

Interpass Cleaning: Wire Brush / Mechanical Grind

POSTWELD HEAT TREATMENT

PWHT n/a

Temp: n/a Time: n/a

WELDING PROCEDURE

Layer/pass	Process	Filler Metal Class	Diameter	Current Type	Amps*	Volts*	Travel Speed*	Other Notes
Root	SMAW	E6010	1/8"	DCEP	75 - 135	n/a	n/a	* Per Electrode Manufacturer
Hot Pass	SMAW	E6010	1/8"	DCEP	75 - 135	n/a	n/a	recommendations
Fill	SMAW	E7018	3/32"	DCEP	70 - 110	n/a	n/a	
Cover	SMAW	E7018	1/8"	DCEP	90 - 160	n/a	n/a	

AWS

Christopher J Mohrbach
CWI 02110871
QC1 EXP. 11/1/2020

STRUCTURES, INC.

Welding Procedure Specification (WPS)

WPS No: SI-18-AWS-D1.1-SMAW-(2) Revision: 0 Date: 2/2/2018 By: Chris Mohrbach
Authorized By: Mark Workman Date: 2/2/2018
Welding Process(es): SMAW Prequalified X Type: Manual X Machine ___ Auto ___ Semi-Auto ___
Supporting PQR(s): SI-18-AWS-D1.1-SMAW-(1)

Joint

Type: Fillet welds: T-Joint, Lap Joint, Corner Joint
Backing: Yes ___ No X Single Weld X Double Weld ___
Backing Material: n/a
Root Opening: See Detail Root Face Dimension: n/a
Groove Angle: n/a Radius (J-U): n/a
Back Gouge Yes ___ No X
Method: n/a

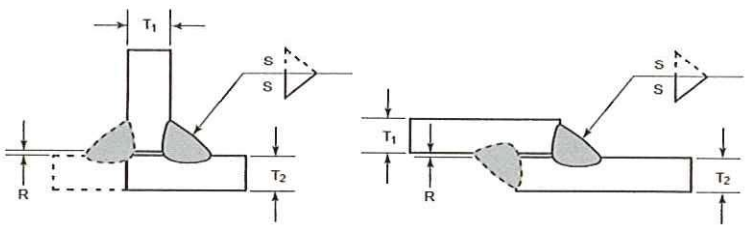

Prequalified Joint Designation: TC-F12, TC-F12a, L-F12, L-F12a

Base Material

Material Spec:	AWS D1.1 GRP. I or II	To	AWS D1.1 GRP. I or II
Type or Group:	All	To	All
Thickness: Groove (in)		-	
Fillet (in)	.125	-	Unlimited
Diameter (Pipe, in):	All	-	Over

Filler Metal

AWS Specification: AWS A5.1
AWS Classification: E7018

Shielding

Flux: n/a Gas: n/a
Composition: n/a
Electrode-flux (class): n/a Flow Rate: n/a
Gas Cup Size: n/a

Preheat

Preheat temp minimum: 70 Degrees F. if material is below 32 Deg F.
Preheat temp for the following thicknesses per catagory. A & B(Table 3.3):

SMAW electrodes:	*Low-Hydrogen*	*Other than Low Hydrogen*
Thickness up to 3/4"	32 Deg F.	32 Deg F.
Over 3/4" to 1-1/2"	50 Deg F.	150 Deg F.
Over 1-1/2" to 2-1/2"	150 Deg F.	225 Deg F.
Over 2-1/2"	225 Deg F.	300 Deg F.

Interpass Temp. Min: 32 Degrees F. Max: n/a

Position

Position of Groove: n/a Fillet: 1F, 2F, 3F, 4F
Vertical Progression Up X Down ___

Electrical Characteristics

Transfer Mode (GMAW) n/a
Short-Circuiting ___ Globular ___ Spray ___
Current AC ___ DCEP X DCEN ___ Pulsed ___
Other: n/a
Tungsten Electrode (GTAW)
Size: n/a Type: n/a

Technique

Stringer or Weave Bead: Both
Multi-pass or Single Pass (per side): Both
Number of Electrodes: 1
Electrode Spacing: Longitudinal: n/a
Lateral: n/a
Angle: n/a
Contact Tube to Work Distance: n/a
Peening: n/a
Interpass Cleaning: Wire Brush / Grind

Post Weld Heat Treatment

PWHT n/a
Temp: n/a Time: n/a

Welding Procedure

Layer/pass	Process	Filler Metal Class	Diameter	Current Type	Amps	Volts	Travel Speed	Other Notes
All	SMAW	E7018	3/32"	DCEP	70-110 *	*	*	
All	SMAW	E7018	1/8"	DCEP	90-160 *	*	*	
All	SMAW	E7018	5/32"	DCEP	130-210 *	*	*	
All	SMAW	E7018	3/16"	DCEP	180-300 *	*	*	
							* As Required	Per Electrode Manufacturer

Christopher J Mohrbach
CWI 02110871
QC1 EXP. 11/1/2020

STRUCTURES, INC.

Welding Procedure Specification (WPS)

Fillet weld (12)
T-joint (T)
Corner joint (C)
Lap joint (L)

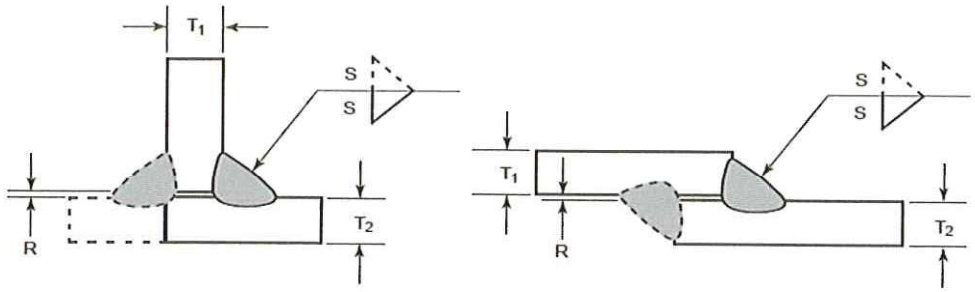

ALL DIMENSIONS IN mm

Welding Process	Joint Designation	Base Metal Thickness	Joint Design/Geometry			Allowed Welding Positions	Notes
				Tolerances			
		T_1 or T_2	Root Opening	As Detailed	As Fit-Up		
SMAW	TC-F12	<3	R = 0	+1/16, –0	3/16 max.	All	a, b, d
	TC-F12a	≥3			5/16 max.		a, b, d
	L-F12	<3			3/16 max.		a, b, c
	L-F12a	≥3			5/16 max.		a, b, c

Notes for Figure 3.5

[a] Fillet weld size ("S"). See 2.4.2.8 and Clause 5.14 for minimum fillet weld sizes. See Table 3.7 for maximum single pass size.
[b] See 5.22.1 for additional fillet weld assembly requirements or exceptions.
[c] See 2.4.2.9 for maximum weld size in lap joints.
[d] Perpendicularity of the members shall be within ±10°.

Memo

** If base material is below 32 Degrees F., the base metal shall be preheated to a minimum of 70 Degrees F. and the minimum interpass temperture shall be maintained during welding.*

This WPS applies to jonts where the minimum angle between the joined pieces is 60 degrees and the maximum angle is 135 degrees. The provisions of weld sizes and base metal thickness can be found in AWS D1.1-2015, Section 2.9 & 3.9. Acceptable weld profiles are defined in Figure 5.4.

Fillet Weld Assembly Joint Dimension Tolerance (5.21.1)

"The parts to be joined by fillet welds shall be brought into close contact as practicable. The root opening shall not exceed 3/16" except in cases involing either shapes or plates 3" or greater in thickness if, after straightening and in assembly, the root opening cannot be closed sufficiently to meet this tolerance. In such cases, a maximum root opening of 5/16" may be used, provided suitable backing is used. Backing may be flux, glass tape, iron powder, or similar materials, or welds using a low-hydrogen process compatible with the filler metal deposited. If the separation is greater than 1/16", the legs of the fillet weld shall be increased by the amount of root opening, or the contractor shall demonstrate that the required effective throat has been obtained."

AWS®
Christopher J Mohrbach
CWI 02110871
QC1 EXP. 11/1/2020

WSIC
(303-929-5750)

STRUCTURES, INC.

Welding Procedure Specification (WPS)

WPS No: SI-18-AWS-D1.1-SMAW-(3) Revision: 0 Date: 2/2/2018 By: Chris Mohrbach
Authorized By: Mark Workman Date: 2/2/2018
Welding Process(es): SMAW Prequalified X Type: Manual X Machine ___ Auto ___ Semi-Auto ___
Supporting PQR(s): SI-18-AWS-D1.1-SMAW-(1)

Joint

Type: Single bevel groove: Butt joint
Backing: Yes X No ___ Single Weld ___ Double Weld X
Backing Material: Weld Deposit per Welding Procedure Below
Root Opening: See Detail Root Face Dimension: See Detail
Groove Radius: See Detail Radius (J-U): n/a
Back Gouge Yes X No ___
Method: AAC or Mechanical

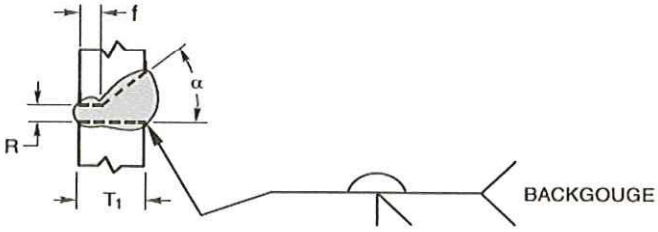

Pre-Qual "B-U4b"

Base Material

Material Spec:	AWS D1.1 GRP. I or II	To	AWS D1.1 GRP. I or II
Type or Group:	All	To	All
Thickness: Groove (in)	.187"	-	Unlimited
Fillet (in)		-	
Diameter (Pipe, in):	4"	-	Over

Filler Metal

AWS Specification: AWS A5.1
AWS Classification: E7018

Shielding

Flux: n/a Gas: n/a
Electrode-flux (class): n/a Composition: n/a
Flow Rate: n/a
Gas Cup Size: n/a

Preheat

Preheat temp minimum: 70 Degrees F. if material is below 32 Deg F.
Preheat temp for the following thicknesses per catagory. A & B(Table 3.3):

SMAW electrodes:	*Low-Hydrogen*	*Other than Low Hydrogen*
Thickness up to 3/4"	32 Deg F.	32 Deg F.
Over 3/4" to 1-1/2"	50 Deg F.	150 Deg F.
Over 1-1/2" to 2-1/2"	150 Deg F.	225 Deg F.
Over 2-1/2"	225 Deg F.	300 Deg F.

Interpass Temp. Min: 32 Degrees F. Max: n/a

Position

Position of Groove: 1G, 2G, 3G, 4G Fillet: n/a
Vertical Progression Up X Down ___

Electrical Characteristics

Transfer Mode (GMAW) n/a
Short-Circuiting ___ Globular ___ Spray ___
Current AC ___ DCEP X DCEN ___ Pulsed ___
Other: n/a
Tungsten Electrode (GTAW)
Size: n/a Type: n/a

Technique

Stringer or Weave Bead: Both
Multi-pass or Single Pass (per side): Both
Number of Electrodes: 1
Electrode Spacing: Longitudinal: n/a
Lateral: n/a
Angle: n/a
Contact Tube to Work Distance: n/a
Peening: n/a
Interpass Cleaning: Wire Brush / Grind

Post Weld Heat Treatment

PWHT n/a
Temp: n/a Time: n/a

Welding Procedure

Layer/pass	Process	Filler Metal Class	Diameter	Current Type	Amps	Volts	Travel Speed	Other Notes
All	SMAW	E7018	3/32"	DCEP	70-110 *	*	*	
All	SMAW	E7018	1/8"	DCEP	90-160 *	*	*	
All	SMAW	E7018	5/32"	DCEP	130-210 *	*	*	
All	SMAW	E7018	3/16"	DCEP	180-300 *	*	*	
							* As Required	Per Electrode Manufacturer

Christopher J Mohrbach
CWI 02110871
QC1 EXP. 11/1/2020

STRUCTURES, INC.

Welding Procedure Specification (WPS)

SI-18-AWS-D1.1-SMAW-(3)

Single-bevel-groove weld (4)
Butt joint (B)

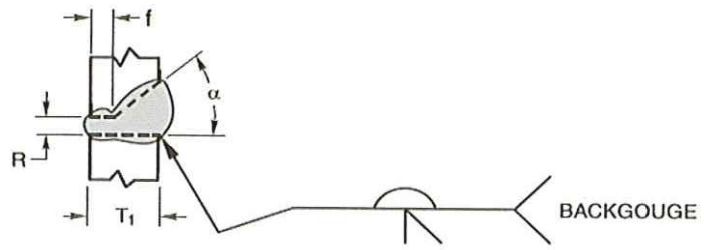

Welding Process	Joint Designation	Base Metal Thickness (U = unlimited)		Groove Preparation			Allowed Welding Positions	Gas Shielding for FCAW	Notes
				Root Opening Root Face Groove Angle	Tolerances				
		T_1	T_2		As Detailed (see 3.13.1)	As Fit-Up (see 3.13.1)			
SMAW	B-U4b	U	—	R = 0 to 1/8 f = 0 to 1/8 α = 45°	+1/16, –0 +1/16, –0 +10°, –0°	+1/16, –1/8 Not limited 10°, –5°	All	—	c, d, e, j
							All	Not required	a, c, d, j

Memo

* If base material is below 32 Degrees F., the base metal shall be preheated to a minimum of 70 Degrees F. and the minimum interpass temperture shall be maintained during welding.

Notes for Figures 3.2 and 3.3

[a] Not prequalified for GMAW-S nor GTAW.
[b] Joint shall be welded from one side only.
[c] Cyclic load application places restrictions on the use of this detail for butt joints in the flat position (see 2.18.2).
[d] Backgouge root to sound metal before welding second side.
[e] SMAW detailed joints may be used for prequalified GMAW (except GMAW-S) and FCAW.
[f] Minimum weld size (E) as shown in Table 3.5. S as specified on drawings.
[g] If fillet welds are used in statically loaded structures to reinforce groove welds in corner and T-joints, these shall be equal to $T_1/4$, but need not exceed 3/8 in [10 mm]. Groove welds in corner and T-joints of cyclically loaded structures shall be reinforced with fillet welds equal to $T_1/4$, but need not exceed 3/8 in [10 mm].
[h] Double-groove welds may have grooves of unequal depth, but the depth of the shallower groove shall be no less than one-fourth of the thickness of the thinner part joined.
[i] Double-groove welds may have grooves of unequal depth, provided these conform to the limitations of Note f. Also the weld size (E) applies individually to each groove.
[j] The orientation of the two members in the joints may vary from 135° to 180° for butt joints, or 45° to 135° for corner joints, or 45° to 90° for T-joints.
[k] For corner joints, the outside groove preparation may be in either or both members, provided the basic groove configuration is not changed and adequate edge distance is maintained to support the welding operations without excessive edge melting.
[l] Weld size (E) shall be based on joints welded flush.
[m] For flare-V-groove welds and flare-bevel-groove welds to rectangular tubular sections, r shall be as two times the wall thickness.
[n] For flare-V-groove welds to surfaces with different radii r, the smaller r shall be used.
[o] For corner and T-joints the member orientation may vary from 90° to less than or equal to 170° provided the groove angle and root opening are maintained, and the angle between the groove faces and the steel backing is at least 90°. See Figure 3.6

Christopher J Mohrbach
CWI 02110871
QC1 EXP. 11/1/2020

WSIC
(303-929-5750)

STRUCTURES, INC.

Welder Qualification Test Record (WQTR)

WQTR No: 87-18 Welder name: Mark Workman Welder ID: MW

WPS No: SI-18-AWS-D1.1-SMAW-(1)A Revision: 0 Date: 2/2/2018

Variables: (Record actual Values Used In Qualification)	Qualification Range:
Process: SMAW	SMAW
Transfer Mode (GMAW): Short-cir ___ Globular ___ Spray ___	Short-Circuiting ___ Globular ___ Spray ___
Type: Manual X Machine ___ Semi-Auto ___ Auto ___	Manual X Machine ___ Semi-Auto ___ Auto ___
Number of Electrodes: Single ___ Multiple X	Single X Multiple X
Current/Polarity: AC ___ DCEP X DCEN ___ Pulsed ___	AC ___ DCEP X DCEN ___ Pulsed ___
Position: 6G	All Positions
Weld Progression: Up X Down X	Up X Down X
Backing: Use Backing n/a	With Backing X Without Backing X
Comsumable Insert (GTAW): Use Insert n/a	With Insert ___ Without Insert ___
Material/Spec: ASTM A106 to ASTM A106	Any AWS D1.1 Group I & II Materials
Thickness (Plate): Groove (in) n/a	.187 - Unlimited In
Fillet (in) n/a	.125 - Unlimited In
Thickness (Pipe/Tube): Groove (in) .710	.187 - Unlimited In
Fillet (in) n/a	.125 - Unlimited In
Diameter (Pipe): Groove (In) 4.5" Sch XXH	4" - Unlimited In
Fillet (in) n/a	All - Unlimited In
Notes: n/a	
Filler Metal:	
Spec.: AWS A5.1	AWS A5.1
Class: E6010 / E7018	E6010 / E7018 and per Table 4.13
F-No.: E6010(F3) / E7018(F4)	F-No. 1, 2, 3 & 4
Gas/Flux Type: n/a	n/a
Other:	

VISUAL INSPECTION Acceptable Yes

GUIDED BEND TEST RESULTS

Type	Result	Type	Result
Side 1 (6G)	Pass	Side 3 (6G)	Pass
Side 2 (6G)	Pass	Side 4 (6G)	Pass

FILLET TEST RESULTS

Apperance: ___ Fillet Size: ___ Macroetch: ___

Fracture Test Root Penetration: ___ Description: ___

Inspected By: Chris Mohrbach (AWS/CWI) Test No.: 87-18 Organization: Western States Inspection Company

CWI #02110871

RADIOGRAPHIC TEST RESULTS

Flim Identification No.	Result	Remark

Interpreted by:

Organization: Christopher J Mohrbach

Test No.: CWI 02110871

Date: QC1 EXP. 11/1/2020

We, the undersigned, certify that the statements in this record are correct and that the test welds were prepared, welded, and tested in accordance with the requirements of Clause 4 & 9 of AWS D1.1 (2015) *Structural Welding Code-Steel.*

Manufacturer: STRUCTURES, INC. Authorized By: Mark Workman Date: February 2, 2018

WSIC

(303-929-5750)

4 Inverness Court East
Suite 250
Englewood, CO 80112
Office: (303) 770-7878
Fax: (303) 770-7667

LETTER OF TRANSMITTAL

TO: Steamboat Structures
96 Perry Park Ave #464
Larkspur, CO 80118

DATE: 6/22/2021

FILE NO. 004-01

ATTN: Heather Reed

RE: Forest Lakes Bridges

WE ARE SENDING YOU:

- ☑ Shop Drawings
- ☐ Specifications
- ☐ Plans
- ☐ Copy of Letter
- ☐ Reports
- ☑ Submittal Information
- ☐ Samples
- ☐ _____

SUBMITTED BY: Structures

COPIES	DESCRIPTION	CONTRACTOR
1	Caisson and Pier Column Rebar Shop Drawings	Structures

THESE ARE TRANSMITTED:

- ☑ For Approval
- ☐ For Your Use
- ☐ As Requested
- ☐ For Review and Comment
- ☐ Approved As Submitted
- ☐ Approved As Noted
- ☐ Returned for Corrections
- ☐ _____

REMARKS:

cc: File

SHOP DRAWING REVIEW

☐ NO EXCEPTIONS ☒ REVISE AS NOTED
☐ REVISE AND RESUBMIT ☐ REJECTED

This review is for general conformance with the design intent of the project and general compliance with the information provided in the contract documents. Review, corrections, or comments made concerning the shop drawings during this review do not relieve the contractor from compliance with the requirements of the drawings and specifications, nor relieve the contractor of contractual responsibility for any error or deviation from the contract documents.

The contractor is responsible for, but not limited to: confirming all quantities, dimensions, and structural capabilities, selecting fabrication and construction techniques, coordinating work with that of all other trades, and performing work in a safe and satisfactory manner.

STEAMBOAT STRUCTURES, LLC

BY: Heather Reed DATE: 06/23/21

Straight bars are NOT included in the quantities

QTY	SIZE	THEO LENGTH	EP	BAR MARK	V	BND TYP	CD	A	B	C	D	E	F/R	G	H	J	K	O
63	5	10-03		5C1		T3				8-042				1-11				2-08

BENDING DIMENSIONS

T3 — G = LAP — CC=CIRCUM

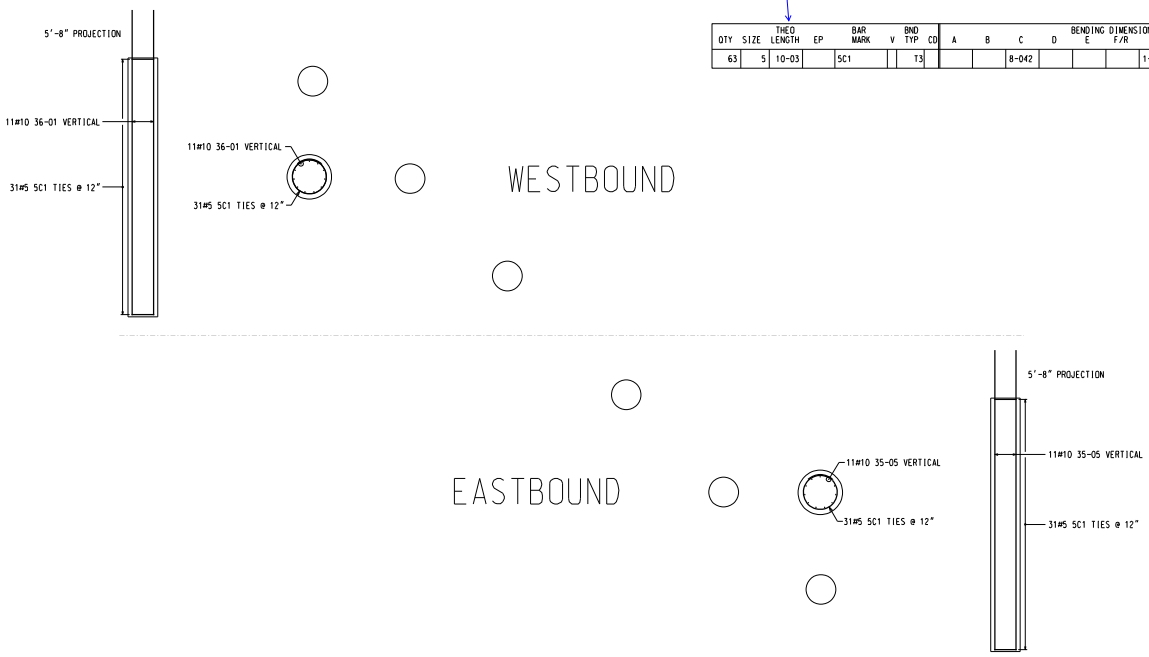

CAISSON PLAN

ALL REINFORCING ON THIS SHEET IS GRADE 60 BLACK

REV.	DATE	BY
0	8/6/24	DJM

FOR APPROVAL

REVISIONS

NOTES:
Footings, Foundations and Retaining Walls shall not be placed until the Engineer has approved the excavation. Contact the Engineer at 719-390-7672 or 719-290-0475 for inspection.

ALL REINFORCING STEEL TO BE DOWEL BARS, SHOULDER TIE BARS, TIE BARS, DOWEL BASKETS, SUPPORTS, AND ACCESSORIES MUST BE COATED WITH EPOXY PER CDOT SPECIFICATIONS.

5353 FRANKLIN ST.
DENVER, CO
Phone: (303) 290-7872
Fax: (303) 290-0475
Web: www.cmc.com

REBAR

TITLE: CAISSONS
PROJECT: FOREST LAKE BRIDGES
LOCATION: MONUMENT, CO
CUSTOMER: STRUCTURES INC.
DRAWN BY: DAVID J MERGLER
DATE: 5/22/2021

CONTRACT NO.
2129400060

DRAWING NO.
R1

QTY	SIZE	THEO LENGTH	EP	BAR MARK	V	BND TYP	CD	A	B	C	D	E	F/R	G	H	J	K	O
22	10	14-09		10C3		1		1-05	13-04							1-011		
26	5	10-03		5C4		T3				8-042				1-11				2-08

BENDING DIMENSIONS

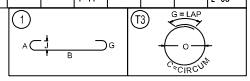

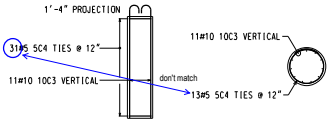

WESTBOUND

EASTBOUND

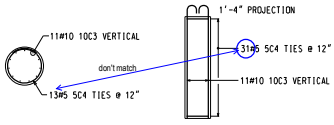

COLUMN PLAN

ALL REINFORCING ON THIS SHEET IS GRADE 60 EPOXY

REV.	DATE	REVISIONS	BY
0	8/6/21	FOR APPROVAL	DJM

NOTE:
Footings, Footings and Walls and Walls and Columns are designed for a Maximum Allowable Soil Pressure of 4 kSF. Footings and Walls are designed for a Minimum Soil Cover of 4 feet. Footings and Walls are designed for a Minimum Soil Density of 120 pcf. Footings and Walls are designed for a Minimum Soil Friction Angle of 30 degrees.

CONTRACTOR TO VERIFY ALL DIMENSIONS, SLOPES, ELEVATIONS, SUBSURFACE CONDITIONS, ETC. PRIOR TO CONSTRUCTION. ANY DISCREPANCIES SHALL BE REPORTED TO THE ENGINEER PRIOR TO CONSTRUCTION.

5353 FRANKLIN ST.
DENVER, CO
Phone: (303) 296-7922
Fax: (303) 296-0475
www.cmc-inc.com

REBAR

TITLE: COLUMNS
PROJECT: FOREST LAKE BRIDGES
LOCATION: MONUMENT, CO
CUSTOMER: STRUCTURES, INC.
DRAWN BY: DAVID J. MERGLER
DATE: 8/22/2021

CONTRACT NO.
2129400060

DRAWING NO.
R2

4 Inverness Court East
Suite 250
Englewood, CO 80112
Office: (303) 770-7878
Fax: (303) 770-7667

LETTER OF TRANSMITTAL

TO: Steamboat Structures
96 Perry Park Ave #464
Larkspur, CO 80118

DATE: 6/24/2021

FILE NO. 005-01

ATTN: Heather Reed

RE: Forest Lakes Bridges

WE ARE SENDING YOU:

- ☑ Shop Drawings
- ☐ Specifications
- ☐ Plans
- ☐ Copy of Letter
- ☐ Reports
- ☑ Submittal Information
- ☐ Samples
- ☐ _____

SUBMITTED BY: Structures

COPIES	DESCRIPTION	CONTRACTOR
1	Pier Cap Rebar Shop Drawings	Structures

THESE ARE TRANSMITTED:

- ☑ For Approval
- ☐ For Your Use
- ☐ As Requested
- ☐ For Review and Comment
- ☐ Approved As Submitted
- ☐ Approved As Noted
- ☐ Returned for Corrections
- ☐ _____

REMARKS:

cc: File

SHOP DRAWING REVIEW

☐ NO EXCEPTIONS X REVISE AS NOTED
☐ REVISE AND RESUBMIT ☐ REJECTED

This review is for general conformance with the design intent of the project and general compliance with the information provided in the contract documents. Review, corrections, or comments made concerning the shop drawings during this review do not relieve the contractor from compliance with the requirements of the drawings and specifications, nor relieve the contractor of contractual responsibility for any error or deviation from the contract documents.

The contractor is responsible for, but not limited to: confirming all quantities, dimensions, and structural capabilities, selecting fabrication and construction techniques, coordinating work with that of all other trades, and performing work in a safe and satisfactory manner.

STEAMBOAT STRUCTURES, LLC

BY: **H. Reed** DATE: **06/29/21**

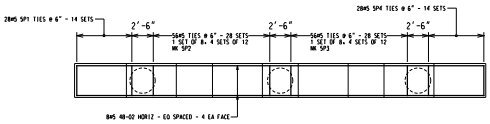

WESTBOUND PIER 2 - PLAN

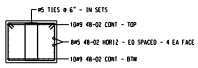

SECTION

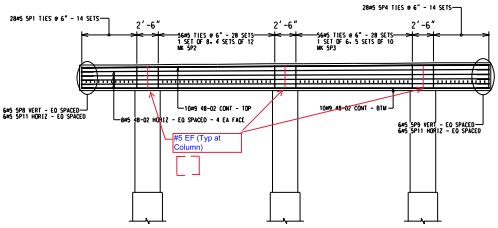

ELEVATION

Add 6 - #5s at the top of columns as shown in elevation comment

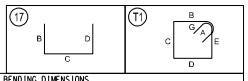

QTY	SIZE	THEO LENGTH	EP	BAR MARK	V	BND TYP	CD	A	B	C	D	E	F/R	G	H	J	K	O
								BENDING DIMENSIONS										
28	5	10-11		5P1		T1		0-052	2-04	2-08	2-04	2-08		0-052				
8	5	11-02		5P2	S	T1		0-052	2-04	2-093	2-04	2-093		0-052				
12	5	11-02		5P2	+	T1		0-052	2-04	2-092	2-04	2-092		0-052				
12	5	11-01		5P2	+	T1		0-052	2-04	2-09	2-04	2-09		0-052				
12	5	11-00		5P2	+	T1		0-052	2-04	2-083	2-04	2-083		0-052				
12	5	11-00		5P2	+	T1		0-052	2-04	2-082	2-04	2-082		0-052				
6	5	11-05		5P3	S	T1		0-052	2-04	2-11	2-04	2-11		0-052				
10	5	11-04		5P3	+	T1		0-052	2-04	2-103	2-04	2-103		0-052				
10	5	11-04		5P3	+	T1		0-052	2-04	2-102	2-04	2-102		0-052				
10	5	11-03		5P3	+	T1		0-052	2-04	2-101	2-04	2-101		0-052				
10	5	11-03		5P3	+	T1		0-052	2-04	2-10	2-04	2-10		0-052				
10	5	11-02		5P3	+	T1		0-052	2-04	2-093	2-04	2-093		0-052				
28	5	11-06		5P4		T1		0-052	2-04	2-112	2-04	2-112		0-052				
6	5	5-06		5P8		17			1-06	2-062	1-06							
6	5	5-10		5P9		17			1-06	2-10	1-06							
12	5	6-06		5P11		17			1-06	3-062	1-06							

REV.	DATE	DESCRIPTION	BY
0	06/04/21	FOR APPROVAL	DJM

NOTES:
Footings, Foundation Walls and Abutments are not shown for clarity. Refer to Footing Plan for Footing Reinforcing. Refer to Foundation Plan for Foundation Wall Reinforcing. Refer to Abutment Plan for Abutment Reinforcing.

ALL DIMENSIONS, SLOPES, ELEVATIONS, SKEWS, ANGLES, ETC. MUST BE VERIFIED IN THE FIELD BEFORE FABRICATION OR CONSTRUCTION.

CONSULTING ENGINEER (STRUCTURAL)
5353 FRANKLIN ST.
DENVER, CO
Phone: (303) 296-7922
Fax: (303) 296-0475
www.cmc-llc.com

REBAR

cmc

CONSULTING ENGINEER (STRUCTURAL)

TITLE: WESTBOUND PIER 2
PROJECT: FOREST LAKE BRIDGES
LOCATION: MONUMENT, CO
CLIENT/OWNER: STRUCTURES, INC.
DRAWN BY: DAVID J. MERGLER
DATE: 5/24/2021

CONTRACT NO.
2129400060

DRAWING NO.
R3

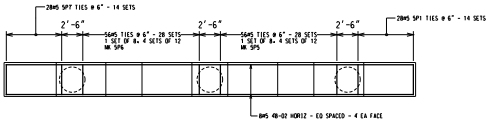

EASTBOUND PIER 2 - PLAN

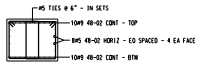

SECTION

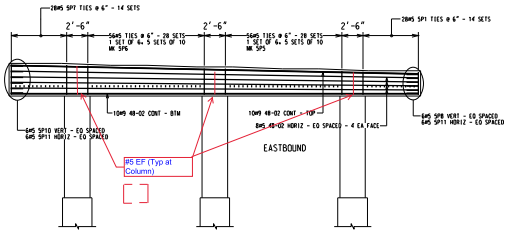

ELEVATION

Add 6 - #5s at the top of columns as shown in elevation comment

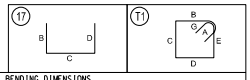

QTY	SIZE	THEO LENGTH	EP	BAR MARK	V	BND TYP	CD	A	B	C	D	E	F/R	G	H	J	K	O
								BENDING DIMENSIONS										
28	5	10-11		5P1		T1		0-052	2-04	2-08	2-04	2-08		0-052				
6	5	11-09		5P5	S	T1		0-052	2-04	3-01	2-04	3-01		0-052				
10	5	11-07		5P5	+	T1		0-052	2-04	3-001	2-04	3-001		0-052				
10	5	11-06		5P5	+	T1		0-052	2-04	2-112	2-04	2-112		0-052				
10	5	11-04		5P5	+	T1		0-052	2-04	2-103	2-04	2-103		0-052				
10	5	11-03		5P5	+	T1		0-052	2-04	2-10	2-04	2-10		0-052				
10	5	11-01		5P5	+	T1		0-052	2-04	2-091	2-04	2-091		0-052				
6	5	12-05		5P6	S	T1		0-052	2-04	3-05	2-04	3-05		0-052				
10	5	12-03		5P6	+	T1		0-052	2-04	3-041	2-04	3-041		0-052				
10	5	12-02		5P6	+	T1		0-052	2-04	3-032	2-04	3-032		0-052				
10	5	12-00		5P6	+	T1		0-052	2-04	3-023	2-04	3-023		0-052				
10	5	11-11		5P6	+	T1		0-052	2-04	3-02	2-04	3-02		0-052				
10	5	11-09		5P6	+	T1		0-052	2-04	3-011	2-04	3-011		0-052				
28	5	12-08		5P7		T1		0-052	2-04	3-063	2-04	3-063		0-052				
6	5	5-06		5P8		17			1-06	2-062	1-06							
6	5	6-05		5P10		17			1-06	3-051	1-06							
12	5	6-06		5P11		17			1-06	3-062	1-06							

REV. NO.	DATE	REVISIONS	BY
0	06/04/21	FOR APPROVAL	DJM

REVISIONS SHOWN BY REVISION NO.

5353 FRANKLIN ST.
DENVER, CO
Phone: (303) 296-7822
Fax: (303) 296-0475
www.mmc-inc.com

REBAR

mmc

DESIGN CONSULTANT

TITLE Drawing Title
PROJECT FOREST LAKE BRIDGES
LOCATION Location
CUSTOMER STRUCTURES, INC.
DRAWN BY Derek Moeller
DATE 5/24/2021

CONTRACT NO.
2129400060

DRAWING NO.
R-1

4 Inverness Court East
Suite 250
Englewood, CO 80112
Office: (303) 770-7878
Fax: (303) 770-7667

LETTER OF TRANSMITTAL

TO: Steamboat Structures
96 Perry Park Ave #464
Larkspur, CO 80118

DATE: 6/30/2021

FILE NO. 006-01

ATTN: Heather Reed

RE: Forest Lakes Bridges

WE ARE SENDING YOU:

- ☐ Shop Drawings
- ☐ Specifications
- ☐ Plans
- ☐ Copy of Letter
- ☐ Reports
- ☑ Submittal Information
- ☐ Samples
- ☐ _____

SUBMITTED BY: Structures

COPIES	DESCRIPTION	CONTRACTOR
1	Pier Cap Falsework Plan	Structures

THESE ARE TRANSMITTED:

- ☐ For Approval
- ☑ For Your Use
- ☐ As Requested
- ☐ For Review and Comment
- ☐ Approved As Submitted
- ☐ Approved As Noted
- ☐ Returned for Corrections
- ☐ _____

REMARKS:

cc: File

PIER CAP FALSEWORK DRAWINGS

FOREST LAKES BRIDGES

GENERAL NOTES:

1. THIS DRAWING HAS BEEN PREPARED TO REPRESENT A FORM SYSTEM THAT IS CAPABLE OF SUPPORTING THE FLUID WEIGHT OF CONCRETE DURING CASTING THE PIER CAPS.
2. ALL FORMWORK HAS BEEN DESIGNED IN ACCORDANCE WITH ACI 347 AND SP-4 (FORMWORK FOR CONCRETE). DESIGN ASSUMES THAT ALL MATERIALS AND PRODUCTS ARE UNDAMAGED, OF HIGH QUALITY, ARE PROPERLY MAINTAINED AND ARE INSTALLED PER MANUFACTURER'S RECOMMENDATIONS.
3. THE CONTRACTOR IS RESPONSIBLE FOR ALL QUALITY CONTROL ASSOCIATED WITH SETTING FORMS TO APPROPRIATE GRADES AND ELEVATIONS AND FOR INSTALLING ALL FORM COMPONENTS IN CONFORMANCE WITH THIS DRAWING AND ALL MANUFACTURER'S RECOMMENDATIONS.
4. ALL COIL ROD SHALL BE HIGH STRENGTH COIL ROD. ALL COIL ROD SHALL BE CONNECTED WITH HEX NUTS TO DEVELOP THE REQUIRED CAPACITY. NUTS SHALL BEAR ON A STANDARD NUT WASHER AS REQUIRED. TAPERED NUTS OR SHIMS SHALL BE USED TO ENSURE FLUSH BEARING OF NUTS ON PLATES. COIL ROD SHALL FULLY ENGAGE ALL THREADS OF NUTS AND COIL INSERTS. TORQUE COIL NUTS TO APPROXIMATELY 50 FT-LBS TO PRE-LOAD COIL ROD.
5. ALL MANUFACTURED ITEMS (INSERTS, BRACKETS, ETC.) SHALL BE INSTALLED AND OPERATED PER MANUFACTURER'S SPECIFICATIONS. APPROVED EQUIVALENT MANUFACTURED ITEMS MAY BE SUBSTITUTED AT ENGINEER'S APPROVAL.
6. THE FALSEWORK AND FORMWORK DETAILS HEREIN ARE DESIGNED TO SUPPORT THE LOADINGS DESCRIBED BELOW FOR THIS SPECIFIC BRIDGE. RE-USE OF PORTIONS OR THE ENTIRE SYSTEM ON ANOTHER BRIDGE PROJECT REQUIRES SEPARATE DESIGN.

TIMBER

1. ALL TIMBER SHALL BE IN ACCORDANCE WITH THE NATIONAL DESIGN SPECIFICATION NDS 2005.
2. ALL TIMBER SHALL BE VISUALLY GRADED DOUGLAS FIR LARCH NO. 2 OR BETTER. MOISTURE CONTENT IS ASSUMED TO NOT EXCEED 19% (DRY). TEMPERATURE IS ASSUMED TO NOT EXCEED 100°F.
3. PRESSURE TREATED OR INCISED LUMBER SHALL NOT BE USED.
4. DESIGN VALUES FOR LUMBER 2"-4" THICK:
   2"-4" WIDE NO. 1:
   Fb = 900 PSI
   Fv = 180 PSI
5. DESIGN LOAD DURATION FACTORS:
   7 DAY LOADING: Cd = 1.25
   10 MINUTE LOADING: Cd = 1.60
6. FLAT USE FACTOR FOR 2" THICKNESS (Cfu):
   2"-3" WIDE: Cfu = 1.0
   4"-5" WIDE: Cfu = 1.1
   6"-8" WIDE: Cfu = 1.15
7. DOUGLAS FIR LARCH DESIGN VALUES INCLUDE SIZE FACTOR UP TO 8" WIDE.
8. PLYWOOD IS ASSUMED TO BE APA CERTIFIED PLYFORM B-B CLASS 1 OR EQUAL. HIGHER QUALITY PLYWOOD MAY BE SUBSTITUTED.

STEEL

1. STEEL DESIGN IN ACCORDANCE WITH MANUAL OF STEEL CONSTRUCTION, AISC, 13TH EDITION.
2. ALL STEEL ASSUMED TO BE ASTM A36 Fy = 36 KSI MINIMUM. ASSUMED MODULUS OF ELASTICITY E = 29,000 KSI.
3. ALL STEEL PLATES SHALL BE GRADE 50, ASTM A572 OR EQUIVALENT. Fy = 50 KSI MINIMUM. ASSUMED MODULUS OF ELASTICITY E = 29,000 KSI,
4. WELDING: ALL WELDING SHALL BE PERFORMED BY AN AMERICAN WELDING SOCIETY (AWS) CERTIFIED WELDER AND SHALL BE PERFORMED UNDER THE PROVISIONS SET FORTH BY THE CURRENT AWS STRUCTURAL WELDING CODE-STEEL, AWS D1.1 STANDARDS.
5. ALL WELDS SHALL BE MADE WITH E70XX KSI SERIES ELECTRODES.
6. DANGER: NEVER TACK WELD AS A CONNECTION FOR TEMPORARY WORKS, USE 3/16" X 1" FILLET MINIMUM.
7. STRUCTURAL STEEL COPING (WHERE DETAILED & NECESSARY) SHALL BE MADE WITH A RADIUS PER AWS D1.1 STANDARDS. RE-ENTRANT CORNERS ARE NOT PERMITTED AT COPED BEAMS.
8. BOLTS: ALL BOLTS SHALL BE ASTM A325 HIGH STRENGTH BOLTS, UNLESS NOTED OTHERWISE. HARDENED WASHERS SHALL BE USED ON ALL OUTER PLIES OF ALL BOLTED CONNECTIONS. BOLTS SHALL BE USED IN ACCORDANCE WITH RCSC "SPECIFICATION FOR STRUCTURAL JOINTS USING ASTM A325 OR A490 BOLTS." BOLT HOLES SHALL BE NORMAL SIZE PER RCSC SPECIFICATIONS UNLESS NOTED OTHERWISE.
9. BOLT TIGHTENING SHALL BE CONDUCTED USING THE TURN-OF-THE-NUT METHOD AS OUTLINED IN THE AISC RCSC "SPECIFICATION FOR STRUCTURAL JOINTS USING ASTM A325 OR A490 BOLTS."

DESIGN LOADING:

ASSUMED CONSTRUCTION LOADING:

- DEAD: 150 PCF CIP CONCRETE & REINF DENSITY
  490 PCF STEEL DENSITY
  50 PCF TIMBER DENSITY
  10 PSF FORMS
- LIVE: 50 PSF CONSTRUCTION LL
  75 PLF LINE LOAD APPLIED AT TIMBER GUARDRAIL

INDEX OF SHEETS:

PCFW-01 GENERAL NOTES AND INDEX
PCFW-02 WESTBOUND PIER 2 PLAN AND ELEVATION
PCFW-03 EASTBOUND PIER 2 PLAN AND ELEVATION
PCFW-04 FALSEWORK SECTIONS
PCFW-05 TYPICAL DETAILS

GENERAL KEY:

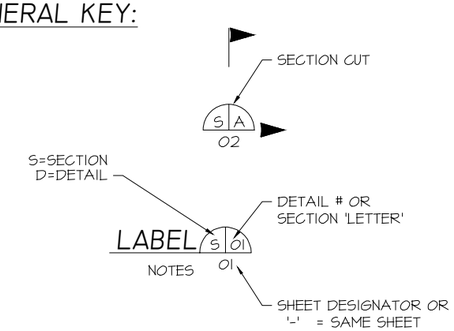

ISSUED FOR APPROVAL

COLORADO REGISTERED PROFESSIONAL ENGINEER
MATTHEW TANNER RUSCH
48913
04-21-21

REVISIONS	DATE	BY
1		
2		
3		
4		
5		
6		
7		

PREPARED FOR: STRUCTURES

STEAMBOAT STRUCTURES

DESIGNED BY:	MTR
DRAWN BY:	AJM
PROJECT MANAGER:	MTR
DATE:	4/21/21

PROJECT TITLE: FOREST LAKES BRIDGES
PROJECT LOCATION: MONUMENT, CO
PIER CAP FALSEWORK
STRUCT/JOB:
GENERAL NOTES AND INDEX
SHEET NO. PCFW-01

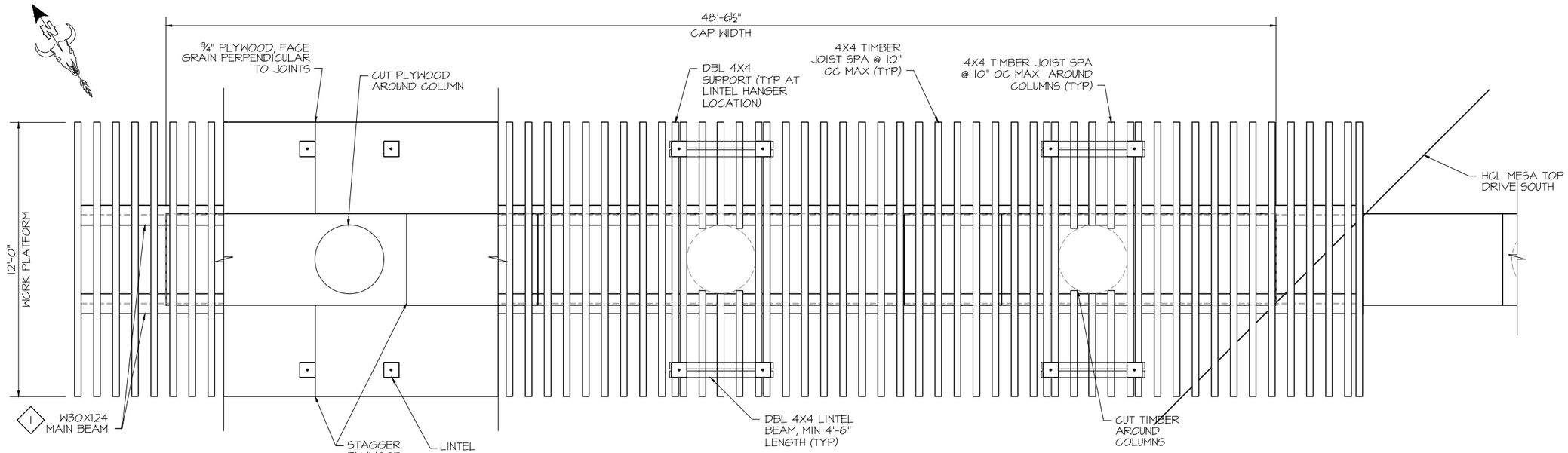

WESTBOUND PIER 2 PLAN

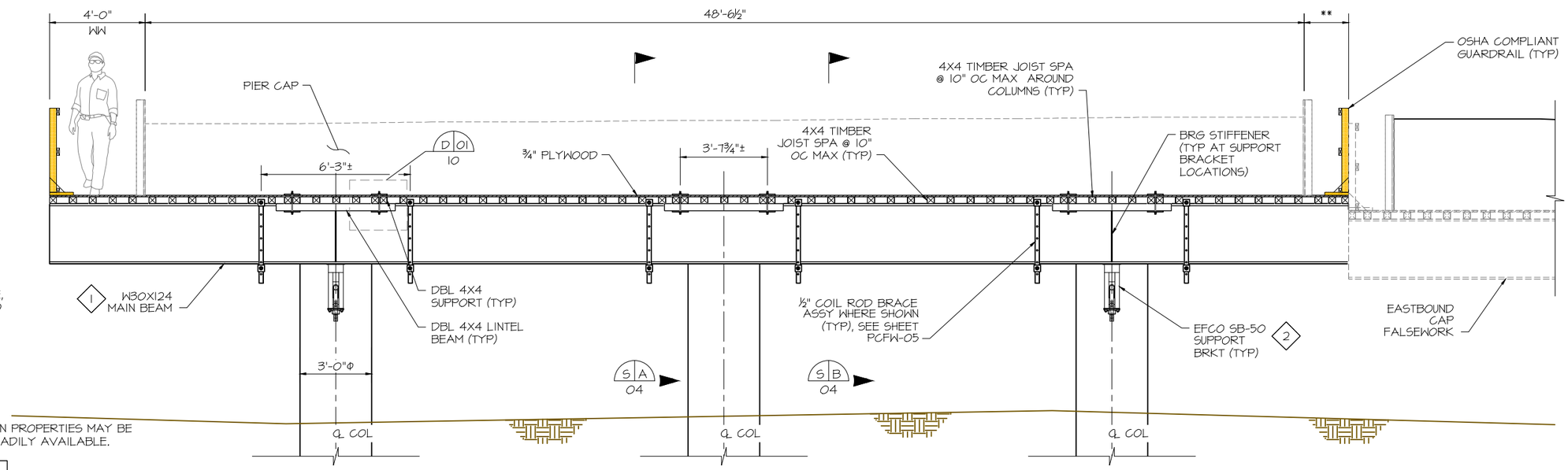

**NOTE:
IF ADJACENT PIER CAP FALSEWORK IS NOT IN PLACE, WALKWAY MAY BE EXTENDED

1 W30X124 PROPERTIES:
A = 36.5 IN²
I = 5360 IN⁴
S = 355 IN⁴
Z = 408 IN⁴

BEAMS WITH LARGER SECTION PROPERTIES MAY BE USED IF MATERIAL IS NOT READILY AVAILABLE.

2 RATED CAPACITY:
= 50,000 LBS (TYP)
EA BRKT, EA SIDE

WESTBOUND PIER 2 ELEVATION

(LOOKING EAST)

ISSUED FOR APPROVAL

COLORADO REGISTERED PROFESSIONAL ENGINEER
TANNER J. MILLER
48913
04-21-21

REVISIONS	DATE	BY
1		
2		
3		
4		
5		
6		
7		

PREPARED FOR: STRUCTURES

STEAMBOAT STRUCTURES

DESIGNED BY: MTR
DRAWN BY: AJM
PROJECT MANAGER: MTR
DATE: 4/21/21

PROJECT TITLE: FOREST LAKES BRIDGES
PROJECT LOCATION: MONUMENT, CO
PIER CAP FALSEWORK
STRUCT/JOB:
WESTBOUND PIER 2 PLAN AND ELEVATION
SHEET NO. PCFW-02

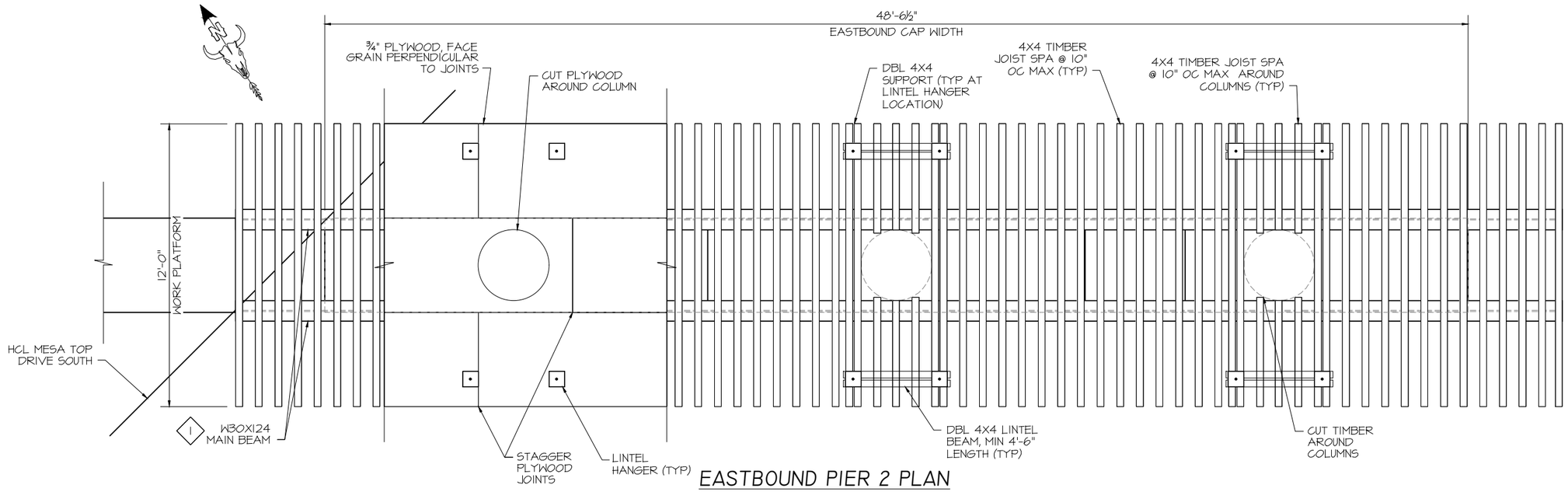

EASTBOUND PIER 2 PLAN

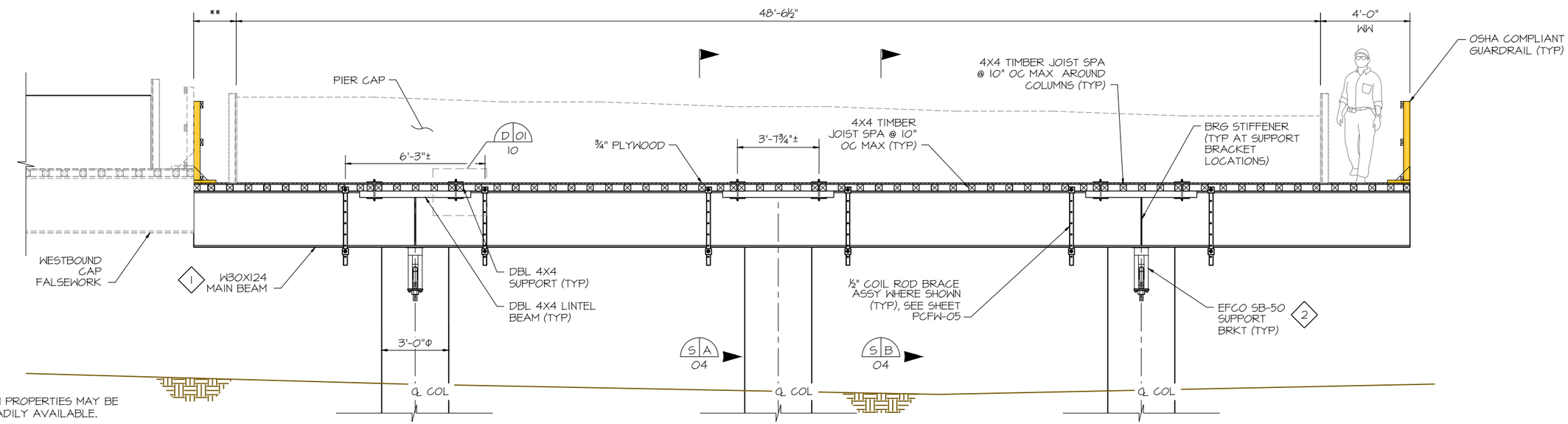

**NOTE:
IF ADJACENT PIER CAP FALSEWORK IS NOT IN PLACE, WALKWAY MAY BE EXTENDED

1 W30X124 PROPERTIES:
A = 36.5 IN²
I = 5360 IN⁴
S = 355 IN⁴
Z = 408 IN⁴

BEAMS WITH LARGER SECTION PROPERTIES MAY BE USED IF MATERIAL IS NOT READILY AVAILABLE.

2 RATED CAPACITY:
= 50,000 LBS (TYP)
EA BRKT, EA SIDE

EASTBOUND PIER 2 ELEVATION

(LOOKING EAST)

ISSUED FOR APPROVAL

COLORADO REGISTERED PROFESSIONAL ENGINEER
TANNER J. MILLER
48913
04-21-21

REVISIONS	DATE	BY
1		
2		
3		
4		
5		
6		
7		

PREPARED FOR: STRUCTURES

STEAMBOAT STRUCTURES

DESIGNED BY: MTR
DRAWN BY: AJM
PROJECT MANAGER: MTR
DATE: 4/21/21

PROJECT TITLE: FOREST LAKES BRIDGES
PROJECT LOCATION: MONUMENT, CO
PIER CAP FALSEWORK
STRUCT/JOB:
EASTBOUND PIER 2 PLAN AND ELEVATION
SHEET NO. PCFW-03

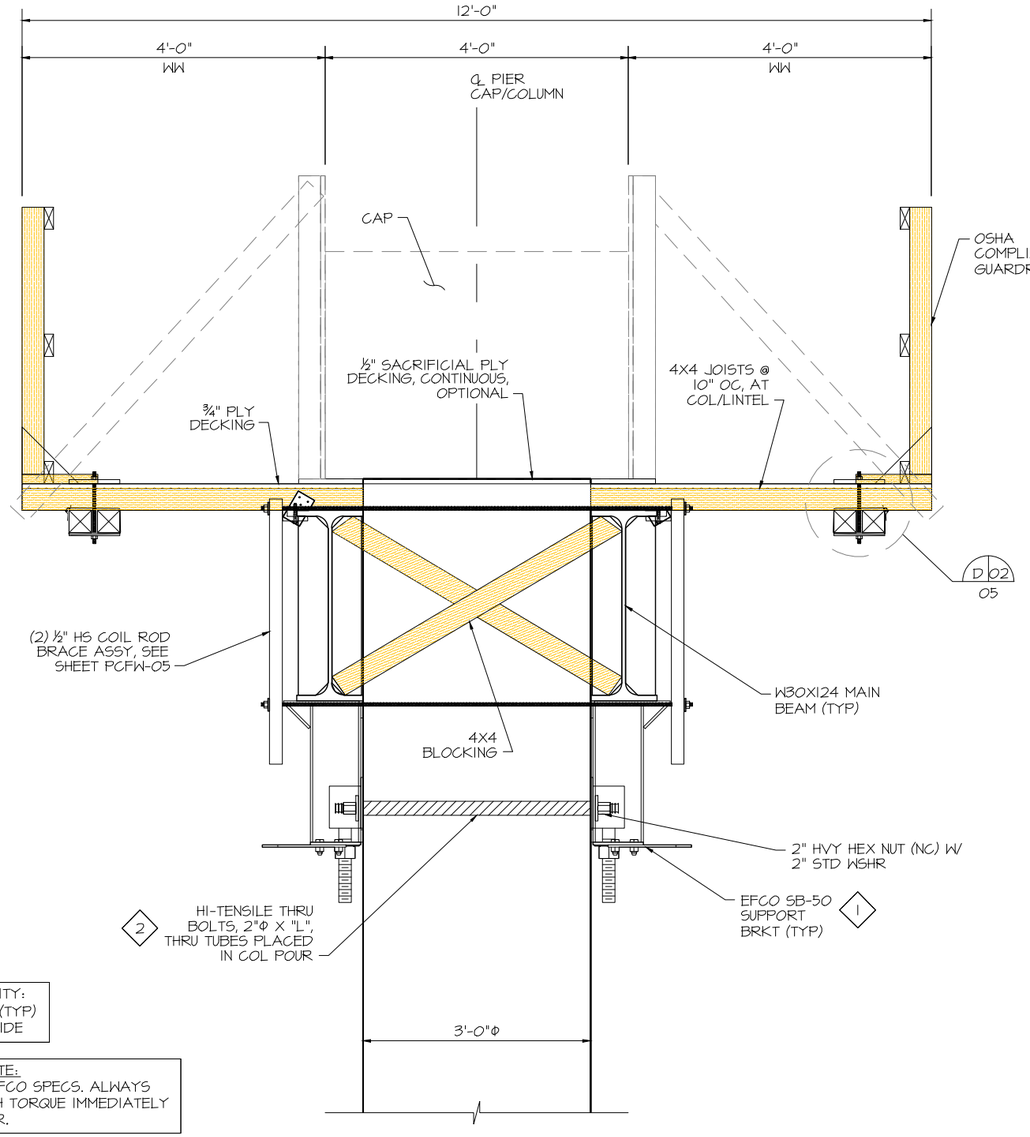

SECTION S A

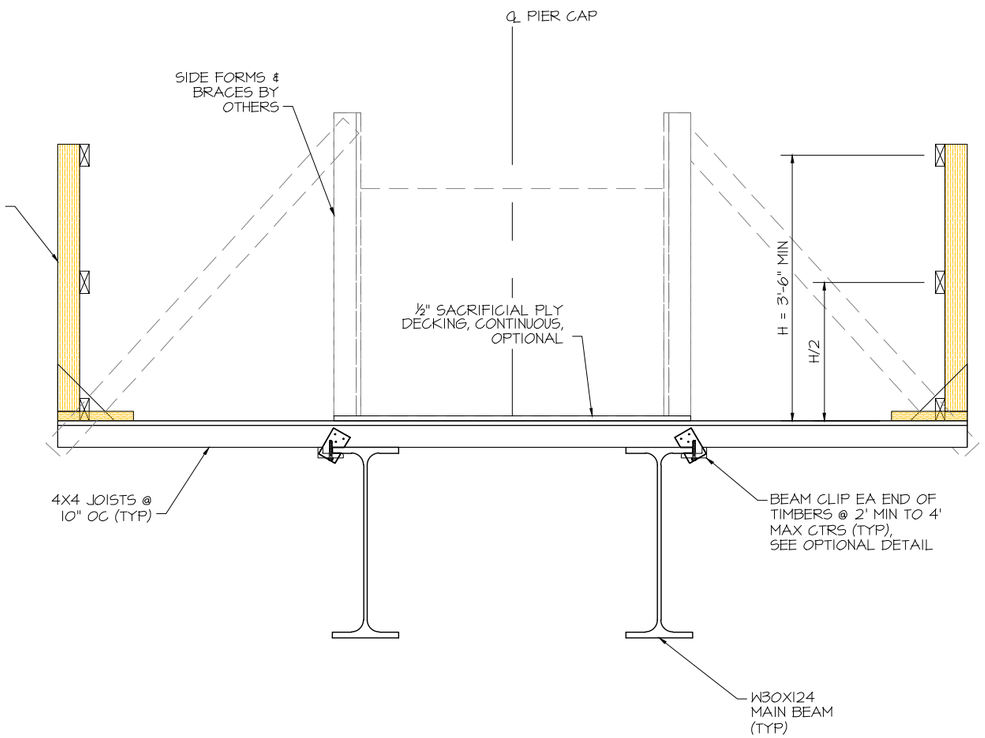

SECTION S B

1 RATED CAPACITY: = 50,000 LBS (TYP) EA BRKT, EA SIDE

2 IMPORTANT NOTE: TORQUE PER EFCO SPECS. ALWAYS RECHECK EACH TORQUE IMMEDIATELY PRIOR TO POUR.

ISSUED FOR APPROVAL

COLORADO REGISTERED PROFESSIONAL ENGINEER
MARTIN TANNER
48913
04-21-21

REVISIONS	DATE	BY
1		
2		
3		
4		
5		
6		
7		

PREPARED FOR: STRUCTURES

STEAMBOAT STRUCTURES

DESIGNED BY: MTR
DRAWN BY: AJM
PROJECT MANAGER: MTR
DATE: 4/21/21

PROJECT TITLE: FOREST LAKES BRIDGES
PROJECT LOCATION: MONUMENT, CO
PIER CAP FALSEWORK
STRUCT/JOB:
FALSEWORK SECTION
SHEET NO. PCFW-04

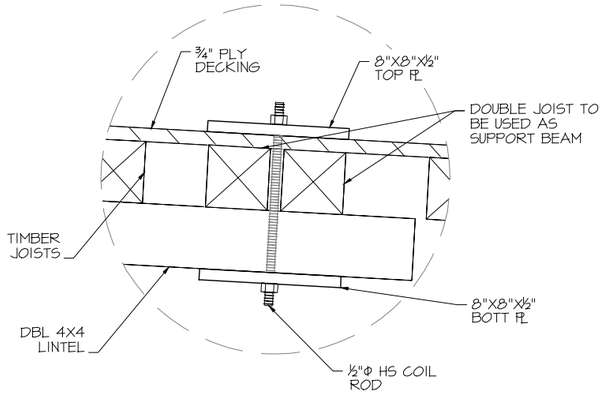

LINTEL HANGER DETAIL 1 (D/01)

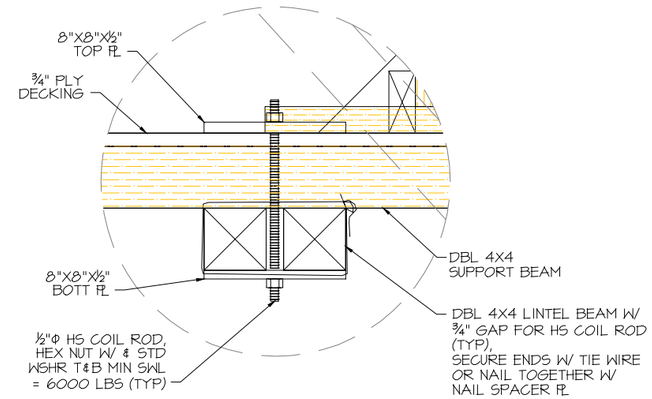

LINTEL HANGER DETAIL 2 (D/02) 04

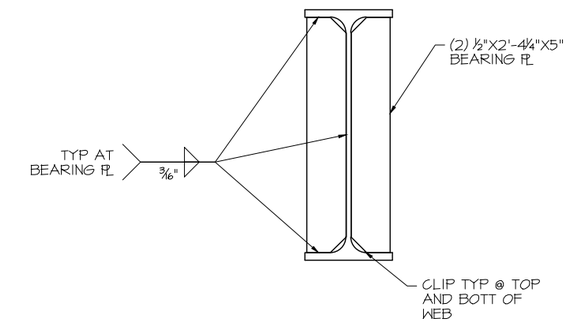

W30X124 STIFFENER DETAIL (D/04) 05

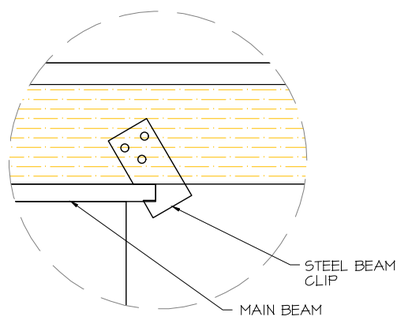

BEAM CLIP

BEAM CLIP SPA @ 2'-0 MIN, 4'-0" MAX

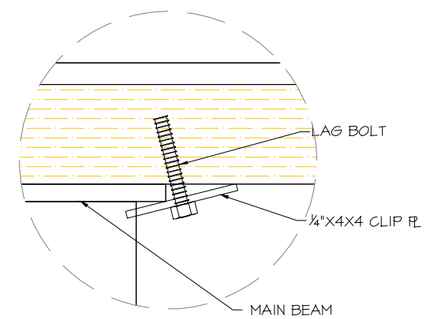

OPTIONAL BEAM CLIP

OPTIONAL BEAM CLIP SPA @ 2'-0 MIN, 4'-0" MAX

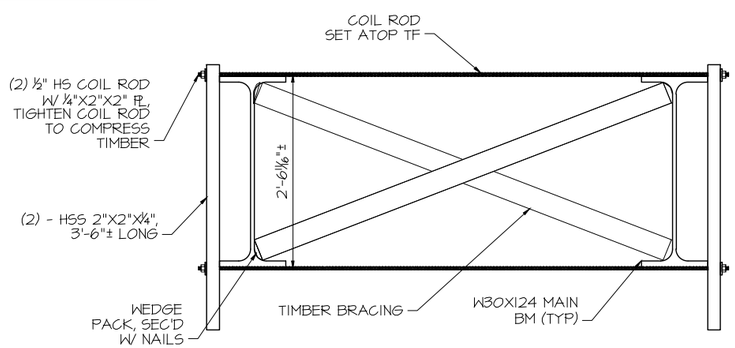

COIL ROD BRACE ASSY ELEVATION

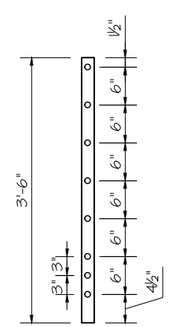

HSS ELEVATION

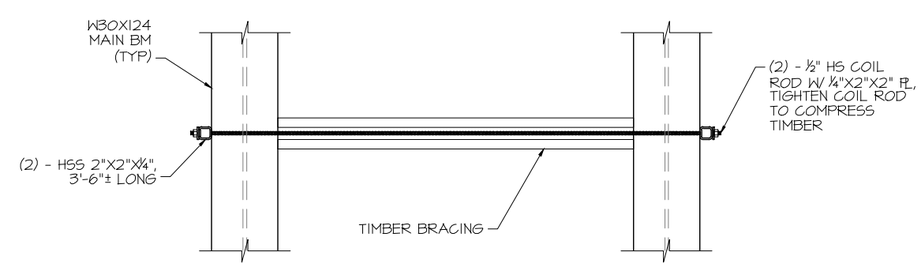

COIL ROD BRACE ASSY PLAN

ISSUED FOR APPROVAL

COLORADO REGISTERED PROFESSIONAL ENGINEER
TANNER JOHN RUDD
48913
04-21-21

REVISIONS	DATE	BY
1		
2		
3		
4		
5		
6		
7		

PREPARED FOR: STRUCTURES

STEAMBOAT STRUCTURES

DESIGNED BY: MTR
DRAWN BY: AJM
PROJECT MANAGER: MTR
DATE: 4/21/21

PROJECT TITLE: FOREST LAKES BRIDGES
PROJECT LOCATION: MONUMENT, CO
PIER CAP FALSEWORK
STRUCT/JOB:
TYPICAL DETAILS
SHEET NO. PCFW-05