GATEWAY TRUCKING SITE DEVELOPMENT PLAN

LOCATED IN NW 1/4 OF NW 1/4 OF SECTION 20, TOWNSHIP 14 WEST, RANGE 6 WEST OF THE 6TH P.M.

CITY OF COLORADO SPRINGS, COUNTY OF EL PASO

STATE OF COLORADO

GRADING AND EROSION CONTROL PLAN

GRADING AND EROSION CONTROL STANDARD NOTES

1. STORMWATER DISCHARGES FROM CONSTRUCTION SITES SHALL NOT CAUSE OR THREATEN TO CAUSE POLLUTION, CONTAMINATION, OR DEGRADATION OF STATE WATERS. ALL WORK AND EARTH DISTURBANCE SHALL BE DONE IN A MANNER THAT MINIMIZES POLLUTION OF ANY ON-SITE OR OFF-SITE WATERS, INCLUDING WETLANDS.

2. NOTWITHSTANDING ANYTHING DEPICTED IN THESE PLANS IN WORDS OR GRAPHIC REPRESENTATION, ALL DESIGN AND CONSTRUCTION RELATED TO ROADS, STORM DRAINAGE AND EROSION CONTROL SHALL CONFORM TO THE STANDARDS AND REQUIREMENTS OF THE MOST RECENT VERSION OF THE RELEVANT ADOPTED EL PASO COUNTY STANDARDS, INCLUDING THE LAND DEVELOPMENT CODE, THE ENGINEERING CRITERIA MANUAL, THE DRAINAGE CRITERIA MANUAL, AND THE DRAINAGE CRITERIA MANUAL VOLUME 2. ANY DEVIATIONS FROM REGULATIONS AND STANDARDS MUST BE REQUESTED, AND APPROVED, IN WRITING.

3. A SEPARATE STORMWATER MANAGEMENT PLAN (SMWP) FOR THIS PROJECT SHALL BE COMPLETED AND AN EROSION AND STORMWATER QUALITY CONTROL PERMIT (ESQCP) ISSUED PRIOR TO COMMENCING CONSTRUCTION. MANAGEMENT OF THE SWMP DURING CONSTRUCTION IS THE RESPONSIBILITY OF THE DESIGNATED QUALIFIED STORMWATER MANAGER OR CERTIFIED EROSION CONTROL INSPECTOR. THE SWMP SHALL BE LOCATED ON SITE AT ALL TIMES DURING CONSTRUCTION AND SHALL BE KEPT UP TO DATE WITH WORK PROGRESS AND CHANGES IN THE FIELD.

4. ONCE THE ESQCP IS APPROVED AND A "NOTICE TO PROCEED" HAS BEEN ISSUED, THE CONTRACTOR MAY INSTALL THE INITIAL STAGE EROSION AND SEDIMENT CONTROL MEASURES AS INDICATED ON THE APPROVED GEC. A PRECONSTRUCTION MEETING BETWEEN THE CONTRACTOR, ENGINEER, AND EL PASO COUNTY WILL BE HELD PRIOR TO ANY CONSTRUCTION. IT IS THE RESPONSIBILITY OF THE APPLICANT TO COORDINATE THE MEETING TIME AND PLACE WITH COUNTY STAFF.

5. CONTROL MEASURES MUST BE INSTALLED PRIOR TO COMMENCEMENT OF ACTIVITIES THAT COULD CONTRIBUTE POLLUTANTS TO STORMWATER. CONTROL MEASURES FOR ALL SLOPES, CHANNELS, DITCHES, AND DISTURBED LAND AREAS SHALL BE INSTALLED IMMEDIATELY UPON COMPLETION OF THE DISTURBANCE.

6. ALL TEMPORARY SEDIMENT AND EROSION CONTROL MEASURES SHALL BE MAINTAINED AND REMAIN IN EFFECTIVE OPERATING CONDITION UNTIL PERMANENT SOIL EROSION CONTROL MEASURES ARE IMPLEMENTED AND FINAL STABILIZATION IS ESTABLISHED. ALL PERSONS ENGAGED IN LAND DISTURBANCE ACTIVITIES SHALL ASSESS THE ADEQUACY OF CONTROL MEASURES AT THE SITE AND IDENTIFY IF CHANGES TO THOSE CONTROL MEASURES ARE NEEDED TO ENSURE THE CONTINUED EFFECTIVE PERFORMANCE OF THE CONTROL MEASURES. ALL CHANGES TO TEMPORARY SEDIMENT AND EROSION CONTROL MEASURES MUST BE INCORPORATED INTO THE STORMWATER MANAGEMENT PLAN.

7. TEMPORARY STABILIZATION SHALL BE IMPLEMENTED ON DISTURBED AREAS AND STOCKPILES WHERE GROUND DISTURBING CONSTRUCTION ACTIVITY HAS PERMANENTLY CEASED OR TEMPORARILY CEASED FOR LONGER THAN 14 DAYS.

8. FINAL STABILIZATION MUST BE IMPLEMENTED AT ALL APPLICABLE CONSTRUCTION SITES. FINAL STABILIZATION IS ACHIEVED WHEN ALL GROUND DISTURBING ACTIVITIES ARE COMPLETE AND ALL DISTURBED AREAS EITHER HAVE A UNIFORM VEGETATIVE COVER WITH INDIVIDUAL PLANT DENSITY OF 70 PERCENT OF PRE-DISTURBANCE LEVELS ESTABLISHED OR EQUIVALENT PERMANENT ALTERNATIVE STABILIZATION METHOD IS IMPLEMENTED. ALL TEMPORARY SEDIMENT AND EROSION CONTROL MEASURES SHALL BE REMOVED UPON FINAL STABILIZATION AND BEFORE PERMIT CLOSURE.

9. ALL PERMANENT STORMWATER MANAGEMENT FACILITIES SHALL BE INSTALLED AS DESIGNED IN THE APPROVED PLANS. ANY PROPOSED CHANGES THAT AFFECT THE DESIGN OR FUNCTION OF PERMANENT STORMWATER MANAGEMENT STRUCTURES MUST BE APPROVED BY THE ECM ADMINISTRATOR PRIOR TO IMPLEMENTATION.

10. EARTH DISTURBANCES SHALL BE CONDUCTED IN SUCH A MANNER SO AS TO EFFECTIVELY MINIMIZE ACCELERATED SOIL EROSION AND RESULTING SEDIMENTATION. ALL DISTURBANCES SHALL BE DESIGNED, CONSTRUCTED, AND COMPLETED SO THAT THE EXPOSED AREA OF ANY DISTURBED LAND SHALL BE LIMITED TO THE SHORTEST PRACTICAL PERIOD OF TIME. PRE-EXISTING VEGETATION SHALL BE PROTECTED AND MAINTAINED WITHIN 50 HORIZONTAL FEET OF A WATERS OF THE STATE UNLESS SHOWN TO BE INFEASIBLE AND SPECIFICALLY REQUESTED AND APPROVED.

11. COMPACTION OF SOIL MUST BE PREVENTED IN AREAS DESIGNATED FOR INFILTRATION CONTROL MEASURES OR WHERE FINAL STABILIZATION WILL BE ACHIEVED BY VEGETATIVE COVER. AREAS DESIGNATED FOR INFILTRATION CONTROL MEASURES SHALL ALSO BE PROTECTED FROM SEDIMENTATION DURING CONSTRUCTION UNTIL FINAL STABILIZATION IS ACHIEVED. IF COMPACTION PREVENTION IS NOT FEASIBLE DUE TO SITE CONSTRAINTS, ALL AREAS DESIGNATED FOR INFILTRATION AND VEGETATION CONTROL MEASURES MUST BE LOOSENED PRIOR TO INSTALLATION OF THE CONTROL MEASURE(S).

12. ANY TEMPORARY OR PERMANENT FACILITY DESIGNED AND CONSTRUCTED FOR THE CONVEYANCE OF STORMWATER AROUND, THROUGH, OR FROM THE EARTH DISTURBANCE AREA SHALL BE A STABILIZED CONVEYANCE DESIGNED TO MINIMIZE EROSION AND THE DISCHARGE OF SEDIMENT OFF SITE.

13. CONCRETE WASH WATER SHALL BE CONTAINED AND DISPOSED OF IN ACCORDANCE WITH THE SWMP. NO WASH WATER SHALL BE DISCHARGED TO OR ALLOWED TO ENTER STATE WATERS, INCLUDING ANY SURFACE OR STORM DRAINAGE SYSTEM OR FACILITIES. CONCRETE WASHOUTS SHALL NOT BE LOCATED IN AN AREA WHERE SHALLOW GROUNDWATER MAY BE PRESENT, OR WITHIN 50 FEET OF A SURFACE WATER BODY, CREEK OR STREAM.

14. DURING DEWATERING OPERATIONS OF UNCONTAMINATED GROUND WATER MAY BE DISCHARGED ON SITE, BUT SHALL NOT LEAVE THE SITE IN THE FORM OF SURFACE RUNOFF UNLESS AN APPROVED STATE DEWATERING PERMIT IS IN PLACE.

15. EROSION CONTROL BLANKETING OR OTHER PROTECTIVE COVERING SHALL BE USED ON SLOPES STEEPER THAN 3:1.

16. CONTRACTOR SHALL BE RESPONSIBLE FOR THE REMOVAL OF ALL WASTES FROM THE CONSTRUCTION SITE FOR DISPOSAL IN ACCORDANCE WITH LOCAL AND STATE REGULATORY REQUIREMENTS. NO CONSTRUCTION DEBRIS, TREE SLASH, BUILDING MATERIAL WASTES OR UNUSED BUILDING MATERIALS SHALL BE BURIED, DUMPED, OR DISCHARGED AT THE SITE.

17. WASTE MATERIALS SHALL NOT BE TEMPORARILY PLACED OR STORED IN THE STREET, ALLEY, OR OTHER PUBLIC WAY, UNLESS IN ACCORDANCE WITH AN APPROVED TRAFFIC CONTROL PLAN. CONTROL MEASURES MAY BE REQUIRED BY EL PASO COUNTY ENGINEERING IF DEEMED NECESSARY, BASED ON SPECIFIC CONDITIONS AND CIRCUMSTANCES.

18. TRACKING OF SOILS AND CONSTRUCTION DEBRIS OFF-SITE SHALL BE MINIMIZED. MATERIALS TRACKED OFF-SITE SHALL BE CLEANED UP AND PROPERLY DISPOSED OF IMMEDIATELY.

19. THE OWNER/DEVELOPER SHALL BE RESPONSIBLE FOR THE REMOVAL OF ALL CONSTRUCTION DEBRIS, DIRT, TRASH, ROCK, SEDIMENT, SOIL, AND SAND THAT MAY ACCUMULATE IN ROADS, STORM DRAINS AND OTHER DRAINAGE CONVEYANCE SYSTEMS AND STORMWATER APPURTENANCES AS A RESULT OF SITE DEVELOPMENT.

20. THE QUANTITY OF MATERIALS STORED ON THE PROJECT SITE SHALL BE LIMITED, AS MUCH AS PRACTICAL, TO THAT QUANTITY REQUIRED TO PERFORM THE WORK IN AN ORDERLY SEQUENCE. ALL MATERIALS STORED ON-SITE SHALL BE STORED IN A NEAT, ORDERLY MANNER, IN THEIR ORIGINAL CONTAINERS, WITH ORIGINAL MANUFACTURER'S LABELS.

21. NO CHEMICAL(S) HAVING THE POTENTIAL TO BE RELEASED IN STORMWATER ARE TO BE STORED OR USED ONSITE UNLESS PERMISSION FOR THE USE OF SUCH CHEMICAL(S) IS GRANTED IN WRITING BY THE ECM ADMINISTRATOR. IN GRANTING APPROVAL FOR THE USE OF SUCH CHEMICAL(S), SPECIAL CONDITIONS AND MONITORING MAY BE REQUIRED.

22. BULK STORAGE OF ALLOWED PETROLEUM PRODUCTS OR OTHER ALLOWED LIQUID CHEMICALS IN EXCESS OF 55 GALLONS SHALL REQUIRE ADEQUATE SECONDARY CONTAINMENT PROTECTION TO CONTAIN ALL SPILLS ONSITE AND TO PREVENT ANY SPILLED MATERIALS FROM ENTERING STATE WATERS, ANY SURFACE OR SUBSURFACE STORM DRAINAGE SYSTEM OR OTHER FACILITIES.

23. NO PERSON SHALL CAUSE THE IMPEDIMENT OF STORMWATER FLOW IN THE CURB AND GUTTER OR DITCH EXCEPT WITH APPROVED SEDIMENT CONTROL MEASURES.

24. OWNER/DEVELOPER AND THEIR AGENTS SHALL COMPLY WITH THE "COLORADO WATER QUALITY CONTROL ACT" (TITLE 25, ARTICLE 8, CRS), AND THE "CLEAN WATER ACT" (33 USC 1344), IN ADDITION TO THE REQUIREMENTS OF THE LAND DEVELOPMENT CODE, DCM VOLUME II AND THE ECM APPENDIX I. ALL APPROPRIATE PERMITS MUST BE OBTAINED BY THE CONTRACTOR PRIOR TO CONSTRUCTION (1041, NPDES, FLOODPLAIN, 404, FUGITIVE DUST, ETC.). IN THE EVENT OF CONFLICTS BETWEEN THESE REQUIREMENTS AND OTHER LAWS, RULES, OR REGULATIONS OF OTHER FEDERAL, STATE, LOCAL, OR COUNTY AGENCIES, THE MOST RESTRICTIVE LAWS, RULES, OR REGULATIONS SHALL APPLY.

25. ALL CONSTRUCTION TRAFFIC MUST ENTER/EXIT THE SITE ONLY AT APPROVED CONSTRUCTION ACCESS POINTS.

26. PRIOR TO CONSTRUCTION THE PERMITTEE SHALL VERIFY THE LOCATION OF EXISTING UTILITIES.

27. A WATER SOURCE SHALL BE AVAILABLE ON SITE DURING EARTHWORK OPERATIONS AND SHALL BE UTILIZED AS REQUIRED TO MINIMIZE DUST FROM EARTHWORK EQUIPMENT AND WIND.

28. THE SOILS REPORT FOR THIS SITE HAS BEEN PREPARED BY NRCS SOIL SURVEY AND SHALL BE CONSIDERED A PART OF THESE PLANS.

29. AT LEAST TEN (10) DAYS PRIOR TO THE ANTICIPATED START OF CONSTRUCTION, FOR PROJECTS THAT WILL DISTURB ONE (1) ACRE OR MORE, THE OWNER OR OPERATOR OF CONSTRUCTION ACTIVITY SHALL SUBMIT A PERMIT APPLICATION FOR STORMWATER DISCHARGE TO THE COLORADO DEPARTMENT OF PUBLIC HEALTH AND ENVIRONMENT, WATER QUALITY DIVISION. THE APPLICATION CONTAINS CERTIFICATION OF COMPLETION OF A STORMWATER MANAGEMENT PLAN (SWMP), OF WHICH THIS GRADING AND EROSION CONTROL PLAN MAY BE A PART. FOR INFORMATION OR APPLICATION MATERIALS CONTACT:

COLORADO DEPARTMENT OF PUBLIC HEALTH AND ENVIRONMENT
WATER QUALITY CONTROL DIVISION
WQCD - PERMITS
4300 CHERRY CREEK DRIVE SOUTH
DENVER, CO 80246-1530
ATTN: PERMITS UNIT

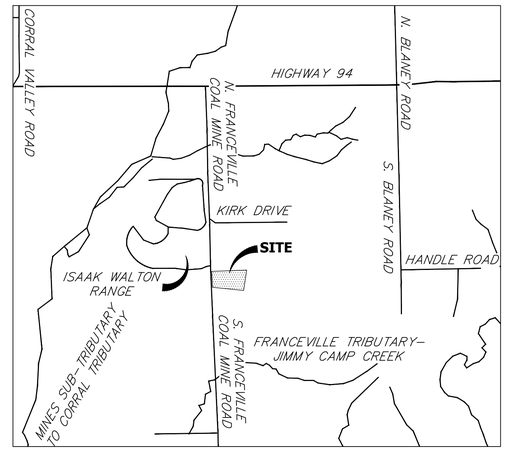

VICINITY MAP
SCALE: 1"=2000'

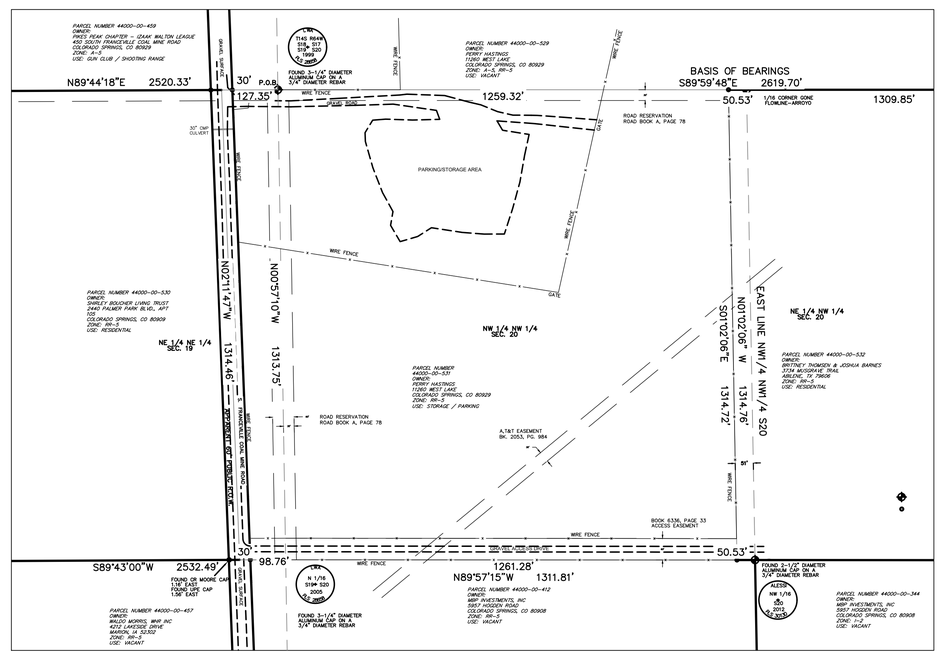

SITE MAP
SCALE: 1" = 200'

CONTACTS:

OWNER/DEVELOPER	GATEWAY TRUCKING, LLC ATTN: PERRY HASTINGS 235 S. FRANCEVILLE COAL MINE ROAD COLORADO SPRINGS, CO 80929
ENGINEER/SURVEYOR	JR ENGINEERING LLC ATTN: MIKE A. BRAMLETT 5475 TECH CENTER DRIVE, SUITE 235 COLORADO SPRINGS, CO 80919 P~(303) 267-6204

SHEET INDEX

EL PASO COUNTY STATEMENT

COUNTY PLAN REVIEW IS PROVIDED ONLY FOR GENERAL CONFORMANCE WITH COUNTY DESIGN CRITERIA. THE COUNTY IS NOT RESPONSIBLE FOR THE ACCURACY AND ADEQUACY OF THE DESIGN, DIMENSIONS, AND/OR ELEVATIONS WHICH SHALL BE CONFIRMED AT THE JOB SITE. THE COUNTY THROUGH THE APPROVAL OF THIS DOCUMENT ASSUMES NO RESPONSIBILITY FOR COMPLETENESS AND/OR ACCURACY OF THIS DOCUMENT.

FILED IN ACCORDANCE WITH THE REQUIREMENTS OF THE EL PASO COUNTY LAND DEVELOPMENT CODE, DRAINAGE CRITERIA MANUAL, VOLUMES 1 AND 2, AND ENGINEERING CRITERIA MANUAL AS AMENDED.

IN ACCORDANCE WITH ECM SECTION 1.12, THESE CONSTRUCTION DOCUMENTS WILL BE VALID FOR CONSTRUCTION FOR A PERIOD OF 2 YEARS FROM THE DATE SIGNED BY THE EL PASO COUNTY ENGINEER. IF CONSTRUCTION HAS NOT STARTED WITHIN THOSE 2 YEARS, THE PLANS WILL NEED TO BE RESUBMITTED FOR APPROVAL, INCLUDING PAYMENT OF REVIEW FEES AT THE PLANNING AND COMMUNITY DEVELOPMENT DIRECTORS DISCRETION.

JENNIFER IRVINE, P.E. DATE

COUNTY ENGINEER/ECM ADMINISTRATOR

OWNER/DEVELOPER STATEMENT

I, THE OWNER/DEVELOPER HAVE READ AND WILL COMPLY WITH THE REQUIREMENT OF THE GRADING AND EROSION CONTROL PLANS.

PERRY HASTINGS DATE

GATEWAY TRUCKING, LLC
235 S. FRANCEVILLE COAL MINE RD
COLORADO SPRINGS, CO 80929

ENGINEER'S STATEMENT

THIS GRADING AND EROSION CONTROL PLAN WAS PREPARED UNDER MY DIRECTION AND SUPERVISION AND IS CORRECT TO THE BEST OF MY KNOWLEDGE AND BELIEF. SAID PLAN HAS BEEN PREPARED ACCORDING TO THE CRITERIA ESTABLISHED BY THE COUNTY FOR GRADING AND EROSION CONTROL PLANS. I ACCEPT RESPONSIBILITY FOR ANY LIABILITY CAUSED BY ANY NEGLIGENT ACTS, ERRORS OR OMISSIONS ON MY PART IN PREPARING THIS PLANS.

COLORADO REGISTERED MIKE A. BRAMLETT 32314 PROFESSIONAL ENGINEER

MIKE A. BRAMLETT, P.E. DATE
COLORADO P.E. 32314
FOR AND ON BEHALF OF JR ENGINEERING, LLC

PCD FILE NO. PPR-21-033

UNTIL SUCH TIME AS THESE DRAWINGS ARE APPROVED BY THE APPROPRIATE REVIEWING AGENCIES, JR ENGINEERING APPROVES THEIR USE ONLY FOR THE PURPOSES DESIGNATED BY WRITTEN AUTHORIZATION.

PREPARED FOR
GATEWAY TRUCKING, LLC
235 S. FRANCEVILLE COAL MINE RD
COLORADO SPRINGS, CO 80929
ATTN: PERRY HASTINGS
602-558-0846
HASTINGSCONTRACTINGCO@GMAIL.COM

J·R ENGINEERING
A Westrian Company
Centennial 303-740-9393 • Colorado Springs 719-593-2593
Fort Collins 970-491-9888 • www.jrengineering.com

No.	REVISION	BY	DATE

H-SCALE	N/A
V-SCALE	N/A
DATE	11/03/21
DESIGNED BY	N/A
DRAWN BY	N/A
CHECKED BY	

GATEWAY TRUCKING SITE DEVELOPMENT PLAN
COVER SHEET

SHEET 1 OF 9
JOB NO. 25215.00

X:\2530000.all\2521500\Drawings\Sheet Dwgs\GEC\2521500CV001.dwg, Cover, 11/9/2021 11:49:55 AM, CS

LAYER LINETYPE LEGEND

	EXISTING	PROPOSED
PHASE LINE		
MATCH LINE		
SECTION LINE		
BOUNDARY LINE		
PROPERTY LINE		
EASEMENT LINE		
RIGHT OF WAY		
R.O.W. A LINE	A	A
CENTERLINE		
CITY LIMITS		
WIRE FENCE	X	X
CHAIN LINK FENCE	O	O
WOOD FENCE	◇	◆
MASONRY FENCE	□	■
GUARDRAIL		
CONC. BARRIER		
CABLE TV	TV	TV
ELECTRIC	E	E
FIBER OPTIC	FO	FO
GAS MAIN	G	G
IRRIGATION MAIN	IRR	IRR
OIL/PETRO. MAIN	O	O
OVERHEAD UTILITY	OHU	OHU
SANITARY SEWER	S	
STORM DRAIN		
TELEPHONE	T	T
WATER MAIN	W	
RAW WATER LINE	RWL	RWL
SWALE/WATERWAY FLOWLINE		
DIVERSION DITCH		
DIVERSION CHANNEL		
MAJOR DRAINAGE BASIN		
MINOR DRAINAGE BASIN		
TOP OF SLOPE		
TOE OF SLOPE		
EDGE OF WATER		
INDEX CONTOUR	6100	6100
INTERMEDIATE CONTOUR		
DEPRESSION CONT. (INDEX)	6100	6100
DEPRESSION CONT. (INTER)		
TOP OF CUTS		
TOE OF FILLS		
CUT AND FILL LINE		C/F C/F
SILT FENCE	SF	SF
100 YEAR FLOODPLAIN	100YR	100YR
500 YEAR FLOODPLAIN	500YR	500YR
FLOODWAY	FLDWY	FLDWY
BASE FLOOD ELEVATION		
EDGE OF WETLANDS		
STONE WALL		

UTILITIES LEGEND

	EXISTING	PROPOSED
STORM SEWER		
MANHOLE	Ⓓ	◉
STORM INLET		▣
AREA INLET – SQUARE	□	
AREA INLET – ROUND	○	
FLARED END SECTION	▷	
RIPRAP		
SANITARY SEWER		
LINE MARKER	Mkr San	
SERVICE MARKER		
CLEAN-OUT		
MANHOLE W/ DIRECTIONAL FLOW ARROW		
WATER LINE		
LINE MARKER	Mkr W	
SERVICE MARKER		
FIRE HYDRANT		
FIRE CONNECTION		
MANHOLE		●
BEND		
BLOW-OFF VALVE		
WELL	WELL	WELL
METER		●
VALVE		
REDUCER		
THRUST BLOCK		
CROSS		
PLUG W/ THRUST BLOCK		
TEE		
REVERSE ANCHOR		
ANODE		
AIR & VACUUM VALVE ASSEMBLY		
TRANSMISSION BLOW-OFF ASSEMBLY		
GAS LINE		
MARKER	Mkr G	
SERVICE MARKER		
METER		●
VALVE		
PLUG		
TEE		
DRY UTILITIES		
CABLE TV MARKER	Mkr TV	
CABLE TELEVISION PEDESTAL	TV	
ELECTRIC MARKER	Mkr E	
ELECTRIC SERVICE MARKER		
ELECTRICAL PEDESTAL	E	
ELECTRICAL METER	E	
ELECTRICAL MANHOLE	E	
FIBER-OPTIC MARKER	Mkr FO	
IRRIGATION PEDESTAL	I	
TELEPHONE MARKER	Mkr T	
TELEPHONE PEDESTAL	T	
TELEPHONE MANHOLE	T	
UTILITY POLE		
GUY ANCHOR		
GUY POLE		
MISC. UTILITIES		
VENT PIPE	VP	VP
TEST HOLE DESIGNATOR	TH# FIRM/AGENCY	

MONUMENTATION LEGEND

ALUMINUM CAP – FOUND	AC
BRASS CAP – FOUND	BC
BENCHMARK – FOUND	
CROSS – FOUND	+
MONUMENT – SET	○
MONUMENT – FOUND (DEFAULT)	●
MONUMENT – FOUND (ALTERNATE 1)	■
MONUMENT – FOUND (ALTERNATE 2)	
MONUMENT – FOUND (ALTERNATE 3)	▲
MONUMENT – FOUND (ALTERNATE 4)	
MONUMENT – FOUND (ALTERNATE 5)	⬟
MONUMENT – FOUND (ALTERNATE 6)	
MONUMENT – FOUND (ALTERNATE 7)	
NAIL & WASHER – FOUND	NAIL & WASHER
PANEL – FOUND	
PK NAIL – FOUND	PK NAIL
ROW MONUMENT – FOUND	
ROW MARKER – FOUND	
SECTION CORNER – FOUND	
SECTION CORNER – SET	
QUARTER-SECTION CORNER – FOUND	
QUARTER-SECTION CORNER – SET	
SECTION CENTER – FOUND	
SECTION CENTER – FOUND	
CONTROL/TRAVERSE POINT – SET	

TRAFFIC LEGEND

	EXISTING	PROPOSED
PARKING METER		
TRAFFIC SIGNAL BOX		
TRAFFIC SIGNAL POLE		
TRAFFIC SIGNAL		
BARRICADE		
GUARD RAIL POST		
IMPACT ATTENUATOR		
BRIDGE STYLE HIGHWAY SIGN POST		
CANTILEVER STYLE HIGHWAY SIGN POST		
SIGN		
RAILROAD MARKER/SIGN		
STREET LIGHT		
STREET LIGHT – SINGLE		
STREET LIGHT – DOUBLE		
LUMINAIRE		
ALTERNATE LUMINAIRE		
SIGNAL MAST ARM W/ LUMINAIRE		
PEDESTAL POLE FOUNDATION		
TRAFFIC SIGNAL POLE		
ROUND PULL BOX		
MEDIUM PULL BOX		
LARGE PULL BOX (20X33X15)		
SIGNAL HEAD WITHOUT BACK PLATE		
SIGNAL HEAD WITH BACK PLATE		
PEDESTRIAN SIGNAL HEAD		
VIDEO IMAGE DETECTOR		
OPTICOM DETECTOR		
VEHICLE DETECTION ZONE		V

STORM WATER MANAGEMENT

	KEY	SYMBOL
CHECK DAM	CD	
CONSTRUCTION ROAD STABILIZATION	CRS	
CURB SOCK INLET PROTECTION	CS	
CONCRETE WASHOUT AREA	CWA	
DIVERSION DITCH AND DIKE, TEMPORARY	DD	
DIVERSION CHANNEL, TEMPORARY	DV	
DEWATERING	DW	
EROSION CONTROL BLANKET	ECB	
INLET FILTER	IF	
INLET PROTECTION	IP	
MULCHING	MU	
OUTLET PROTECTION	OP	
PAVED FLUME	PF	
PERMENENT SEEDING	PS	
REINFORCED CONCRETE DAM	RCD	
ROUGH CUT STREET CONTROL	RCS	
SEDIMENT BASIN	SB	
SEDIMENT CONTROL LOG	SCL	
SILT FENCE	SF	
SURFACE ROUGHENING	SR	
STABILIZED STAGING AREA	SSA	
SEDIMENT TRAP	ST	
STRAW BALE BARRIER	STB	
TERRACING	TER	
TEMPORARY SEEDING	TS	
TEMPORARY STREAM CROSSING CULVERT/BRIDGE	TSC C	
TEMPORARY STREAM CROSSING FORD TYPE	TSC F	
TEMPORARY SLOPE DRAIN	TSD	
VEHICLE TRACKING CONTROL	VTC	
VEHICLE TRACKING CONTROL WITH WASH RACK	WR	

DRAINAGE REPORT PLANS

	KEY
BASIN DESIGNATION (NO COEFFICIENT)	# / #.#
BASIN DESIGNATION (1 COEFFICIENT)	# / #.# / #
BASIN DESIGNATION (2 COEFFICIENTS)	# / #.# / # / #
ANALISYS POINT IDENTIFIER	#
BASIN DESIGNATION (HISTORIC)	# / #.#
BASIN DESIGNATION (DEVELOPED)	# / #.#
SUB-BASIN DESIGNATION (DEVELOPED)	# / #.#
DRAINAGE PIPE IDENTIFIER	##
DRAINAGE POINT IDENTIFIER (HEXAGONAL)	##
DRAINAGE POINT IDENTIFIER (TRIANGULAR)	?
SWMM DESIGNATION 1	#
SWMM DESIGNATION 2	#
SWMM DESIGNATION 3	#
SWMM DESIGNATION 4	?

LANDSCAPE LEGEND

	EXISTING	PROPOSED
TREE – CONIFEROUS		
TREE – DECIDUOUS		
SHRUB/BUSH		
SHRUBS AND BUSHES		
IRRIGATION BOX		
IRRIGATION SPRINKLER		
IRRIGATION VALVE		
BOLLARD		
FLAGPOLE	FP	

811 Know what's below. Call before you dig.

UNTIL SUCH TIME AS THESE DRAWINGS ARE APPROVED BY THE APPROPRIATE REVIEWING AGENCIES, JR ENGINEERING APPROVES THEIR USE ONLY FOR THE PURPOSES DESIGNATED BY WRITTEN AUTHORIZATION.

PREPARED FOR
GATEWAY TRUCKING, LLC
235 S. FRANCEVILLE COAL MINE RD
COLORADO SPRINGS, CO 80929
ATTN: PERRY HASTINGS
602-558-0846
HASTINGSCONTRACTINGCO@GMAIL.COM

J·R ENGINEERING
A Westrian Company
Centennial 303-740-9393 • Colorado Springs 719-593-2593
Fort Collins 970-491-9888 • www.jrengineering.com

No.	REVISION	BY	DATE

H-SCALE	N/A
V-SCALE	N/A
DATE	11/03/21
DESIGNED BY	N/A
DRAWN BY	N/A
CHECKED BY	

GATEWAY TRUCKING SITE DEVELOPMENT PLAN

LEGEND

SHEET 2 OF 9

JOB NO. 25215.00

X:\2520000 all\2521500\Drawings\Sheet Dwgs\GEC\2521500CV01.dwg, Legend, 11/9/2021 11:49:57 AM, CS

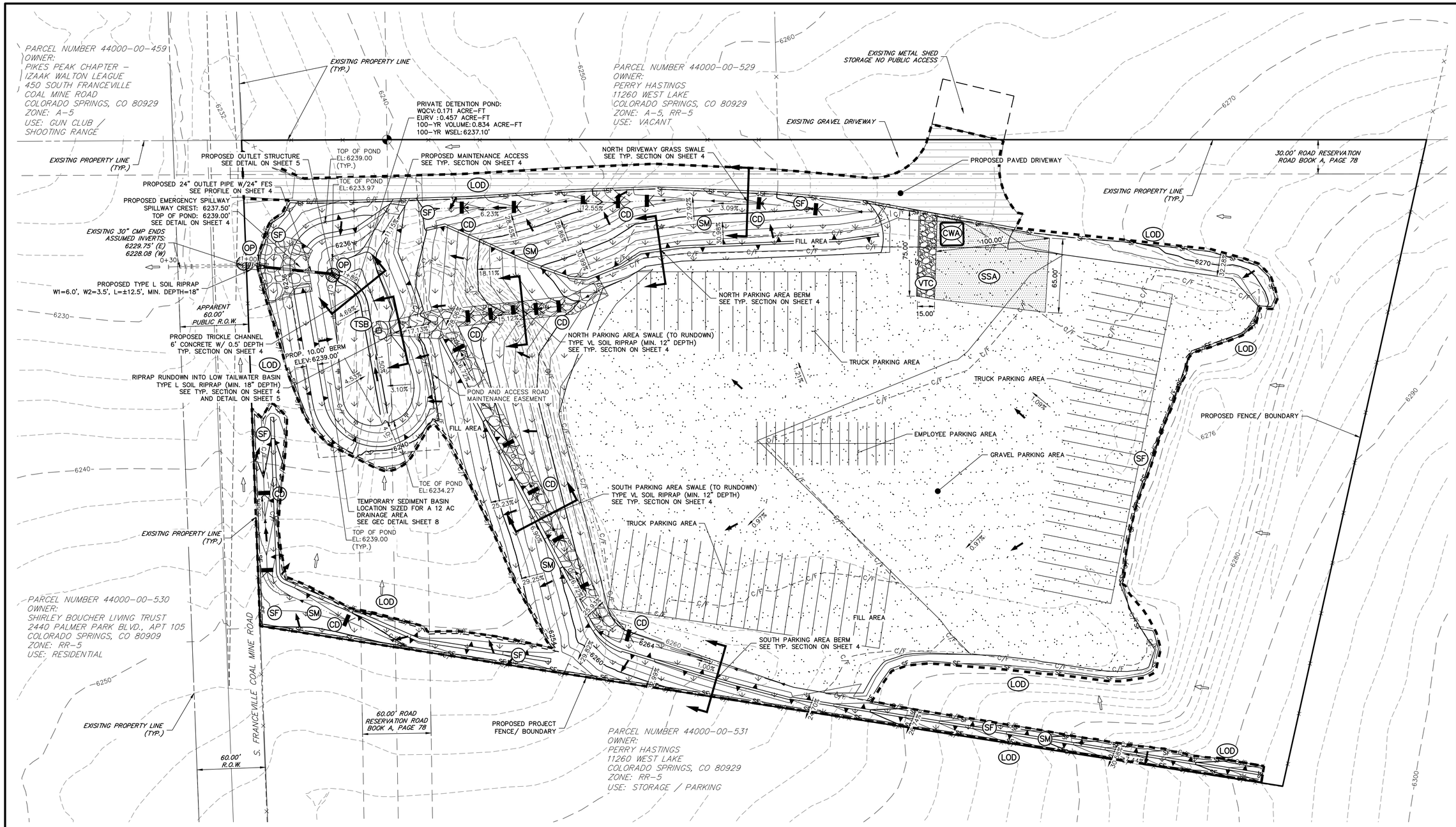

LEGEND

SILT FENCE	SF	PROPOSED FLOW PATH	
STABILIZED STAGING AREA	SSA	EXISTING FLOW PATH	
VEHICLE TRACKING CONTROL	VTC	LIMITS OF CONSTRUCTION/ DISTURBANCE	LOD
CONCRETE WASHOUT AREA	CWA	PERMANENT SEEDING AND MULCHING	SM
OUTLET PROTECTION	OP	TEMPORARY SEDIMENT BASIN	TSB
CHECK DAM	CD	TEMPORARY SLOPE DRAIN	TSD

GEC NOTES:

1. THE EXISTING VEGETATION ON THE SITE IS LIMITED DUE TO THE LOCATION'S ARID CLIMATE. ADDITIONALLY, THE SITE AND DRIVE HAVE BEEN STABILIZED W/ ASPHALT AND GRAVEL FOR USE.
2. THE INITIAL BMPS INCLUDE: SF, VTC, SSA, CWA, CD, TSD, AND TSB. THE INTERIM BMPS INCLUDE: OP. THE FINAL PHASE BMPS INCLUDE: SM AND REMOVAL OF TEMPORARY BMPS ONCE FINAL STABILIZATION IS COMPLETED

40 20 0 40 80
ORIGINAL SCALE: 1" = 40'

811 Know what's below. Call before you dig.

UNTIL SUCH TIME AS THESE DRAWINGS ARE APPROVED BY THE APPROPRIATE REVIEWING AGENCIES, JR ENGINEERING APPROVES THEIR USE ONLY FOR THE PURPOSES DESIGNATED BY WRITTEN AUTHORIZATION.

PREPARED FOR
GATEWAY TRUCKING, LLC
235 S. FRANCEVILLE COAL MINE RD
COLORADO SPRINGS, CO 80929
ATTN: PERRY HASTINGS
602-558-0846
HASTINGSCONTRACTINGCO@GMAIL.COM

J·R ENGINEERING
A Westrian Company
Centennial 303-740-9393 • Colorado Springs 719-593-2593
Fort Collins 970-491-9888 • www.jrengineering.com

No.	REVISION	BY	DATE

H-SCALE	1"=40'
V-SCALE	N/A
DATE	11/03/21
DESIGNED BY	GAG
DRAWN BY	GAG
CHECKED BY	

GATEWAY TRUCKING SITE DEVELOPMENT PLAN

GRADING AND EROSION CONTROL PLAN

SHEET 3 OF 9

JOB NO. 25215.00

X:\2520000.all\2521500\Drawings\Sheet Dwgs\GEC\2521500GEC01.dwg, GEC, 11/9/2021 11:50:02 AM, CS

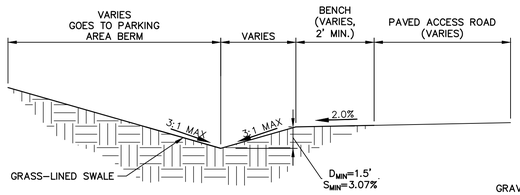

N. DRIVEWAY SWALE
TYP. SECTION
SCALE: N.T.S.

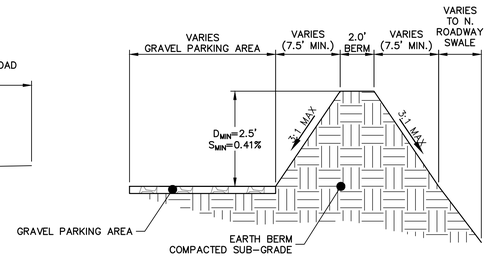

N. PARKING AREA BERM
TYP. SECTION
SCALE: N.T.S.

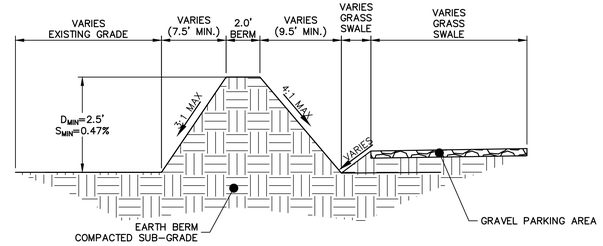

S. PARKING AREA BERM
TYP. SECTION
SCALE: N.T.S.

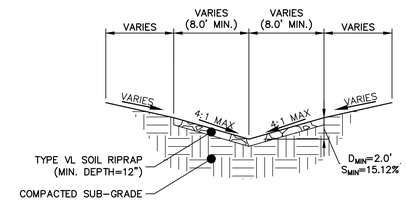

N. PARKING AREA SWALE (TO RUNDOWN)
TYP. SECTION
SCALE: N.T.S.

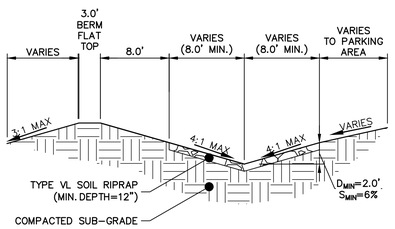

S. SWALE (TO RUNDOWN)
TYP. SECTION
SCALE: N.T.S.

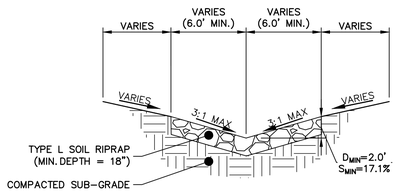

RIPRAP RUNDOWN
INTO FOREBAY
SCALE: 1"=10'

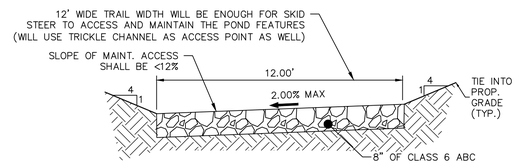

12' GRAVEL MAINTENANCE
ACCESS ROAD TYPICAL SECTION
N.T.S.

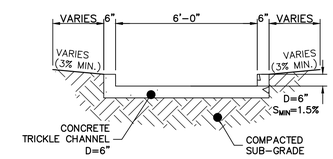

POND TRICKLE CHANNEL
SCALE: 1"=3'

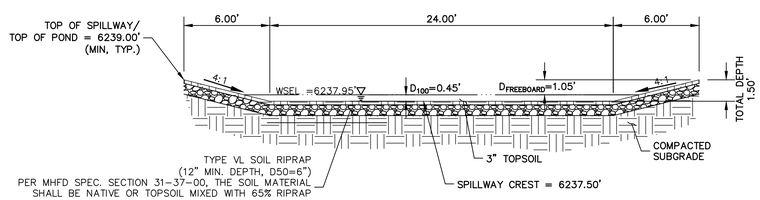

POND EMERGENCY SPILLWAY
TYP. SECTION
SCALE: 1"=5'

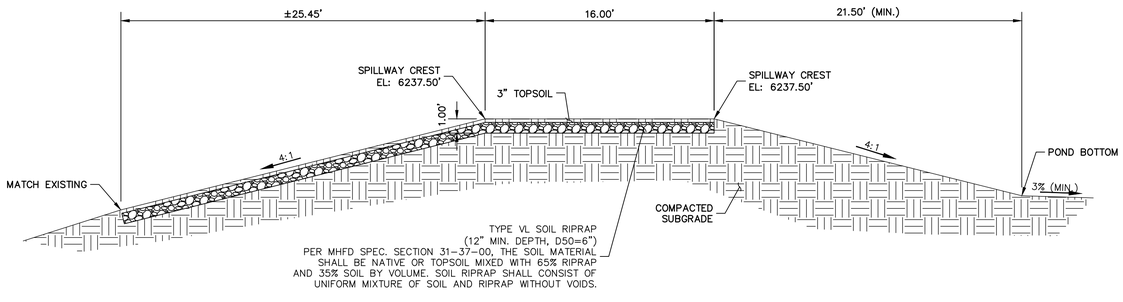

POND EMERGENCY
SPILLWAY SECTION
SCALE: 1"=5'

POND PROFILE
STA 1+00.00 TO 1+88.51

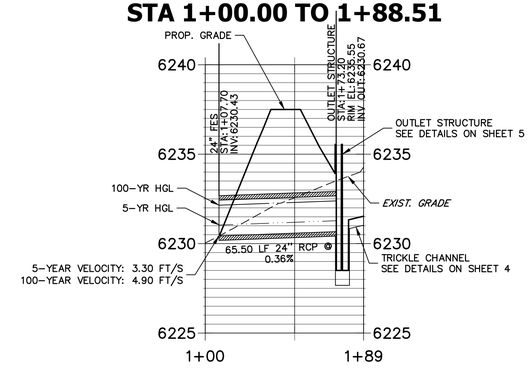

Know what's **below.**
Call before you dig.

UNTIL SUCH TIME AS THESE DRAWINGS ARE APPROVED BY THE APPROPRIATE REVIEWING AGENCIES, JR ENGINEERING APPROVES THEIR USE ONLY FOR THE PURPOSES DESIGNATED BY WRITTEN AUTHORIZATION.

PREPARED FOR
GATEWAY TRUCKING, LLC
235 S. FRANCEVILLE COAL MINE RD
COLORADO SPRINGS, CO 80929
ATTN: PERRY HASTINGS
602-558-0846
HASTINGSCONTRACTINGCO@GMAIL.COM

J·R ENGINEERING
A Westrian Company
Centennial 303-740-9393 • Colorado Springs 719-593-2593
Fort Collins 970-491-9888 • www.jrengineering.com

No.	REVISION	BY	DATE

H-SCALE	VARIES
V-SCALE	VARIES
DATE	11/03/21
DESIGNED BY	GAG
DRAWN BY	GAG
CHECKED BY	

GATEWAY TRUCKING SITE
DEVELOPMENT PLAN
POND DETAILS

SHEET 4 OF 9
JOB NO. 25215.00

X:\250000.all\252150\Drawings\Sheet Dwgs\GEC\25215000T01.dwg, Pond-D01, 11/9/2021 11:50:07 AM, CS

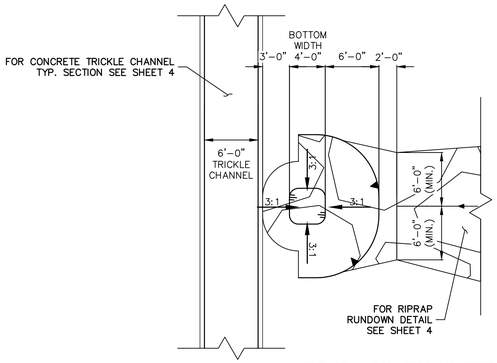

POND LOW TAILWATER BASIN PLAN VIEW

SCALE: 1/8" = 1'

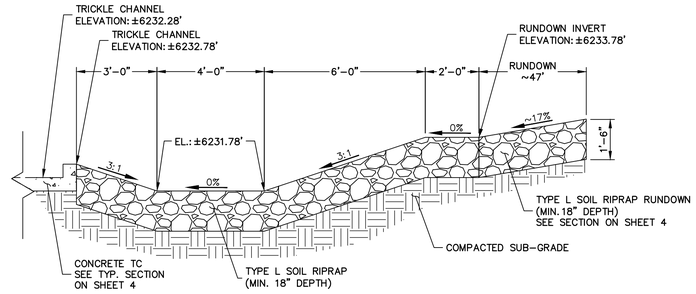

POND LOW TAILWATER BASIN SECTION VIEW

SCALE: 3/8" = 1'

POND OUTLET STRUCTURE NOTES:

ORIFICE PLATE:

1. PROVIDE CONTINUOUS NEOPRENE GASKET MATERIAL BETWEEN THE ORIFICE PLATE AND CONCRETE AND BETWEEN THE RESTRICTOR PLATE AND CONCRETE.
2. BOLT PLATE TO CONCRETE 12" MAX. ON CENTER.

TRASH RACKS:

3. TRASH RACKS SHALL BE 1¼" SCH.40 STEEL PIPE, GALVANIZED, @ 6" CENTERS. SUPPORT BARS SHALL BE ¼"x2" STEEL RECTANGULAR BARS, GALVANIZED, @ 36". ALL TRASH RACKS SHALL BE MOUNTED USING STAINLESS STEEL HARDWARE.
4. REMOVABLE TRASH RACK SECTIONS SHALL BE MOUNTED USING STAINLESS STEEL HARDWARE AND PROVIDED WITH HINGED & LOCKABLE OR BOLTABLE ACCESS PANELS.
5. STEEL TRASH RACKS SHALL BE HOT DIP GALVANIZED AND MAY BE HOT POWDER COATED AFTER GALVANIZING.
6. STRUCTURAL STEEL FOR GRATES, ORIFICE PLATES, AND BARS SHALL BE GALVANIZED AND SHALL BE IN ACCORDANCE WITH CDOT STANDARD SPECIFICATIONS, SUBSECTION 712.06.
7. ALL HARDWARE, BOLTS, AND FASTENERS SHALL BE STAINLESS STEEL.
8. CONTRACTOR SHALL SUBMIT SHOP DRAWINGS FOR ALL PLATES AND GRATING FOR ENGINEER'S APPROVAL PRIOR TO CONSTRUCTION.

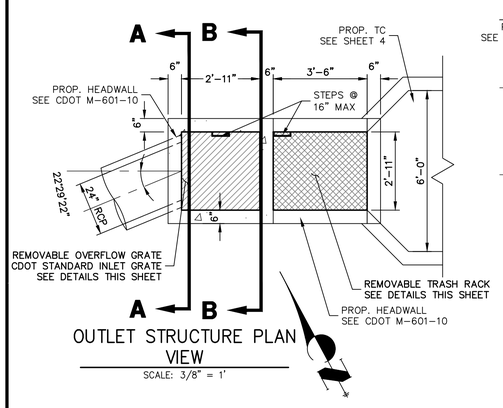

OUTLET STRUCTURE PLAN VIEW

SCALE: 3/8" = 1'

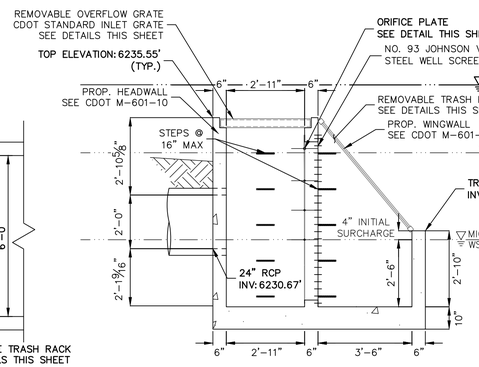

OUTLET STRUCTURE SECTION VIEW

SCALE: 3/8" = 1'

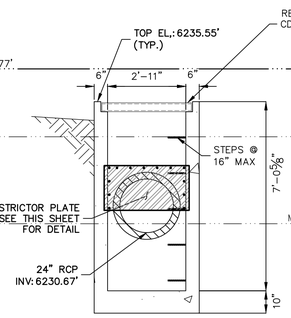

A A–A SECTION

SCALE: 3/8"=1'

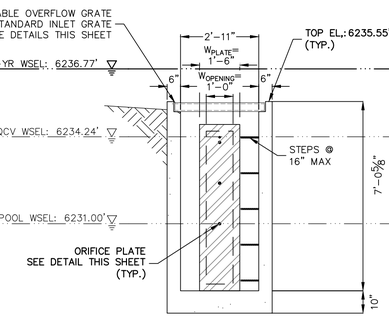

B B–B SECTION

SCALE: 3/8"=1'

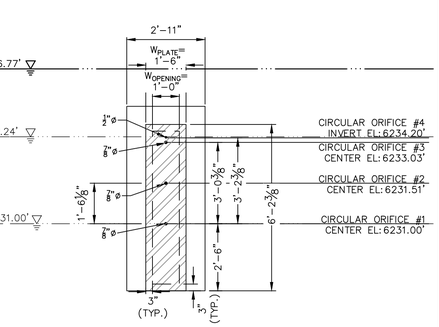

3/16" THICK GALVANIZED STEEL FLOW CONTROL PLATE WITH 3 – ⅞"ø CIRCULAR ORIFICES AND 1 – ø4" CIRCULAR ORIFICE. PROVIDE CONTINUOUS NEOPRENE GASKET MATERIAL BETWEEN THE ORIFICE PLATE AND CONCRETE. BOLT PLATE TO CONCRETE @ 12" MAX O.C.

ORIFICE PLATE DETAIL

SCALE: 3/8"=1'

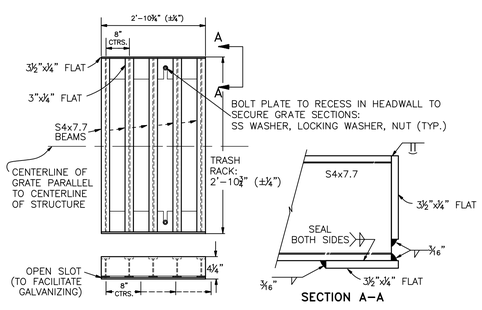

OVERFLOW GRATE STANDARD TYPE C INLET DETAILS

N.T.S.

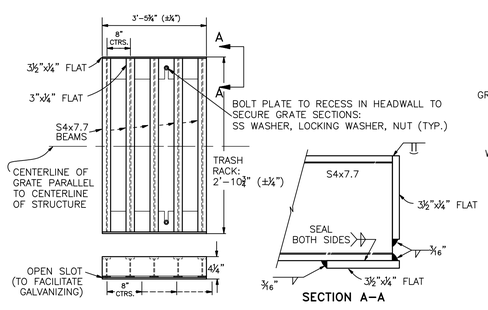

TRASH RACK DETAILS

N.T.S.

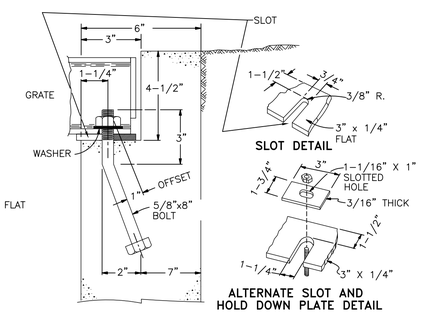

OVERFLOW GRATE/ TRASH RACK INSTALLATION DETAIL

N.T.S.

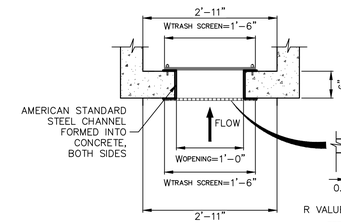

TRASH SCREEN AND PLATE DETAIL (PLAN)

N.T.S.

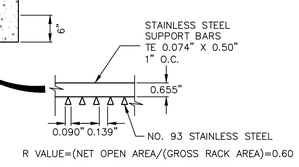

TRASH SCREEN DETAIL

N.T.S.

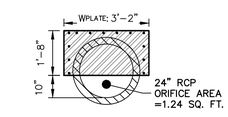

3/16" THICK RESTRICTOR PLATE, GALVANIZED STEEL WITH BOLT PLATE TO CONCRETE @ 6" O.C. MAX. PROVIDE GASKET BETWEEN PLATE AND CONCRETE

RESTRICTOR PLATE DETAIL

SCALE: 3/8"=1'

Know what's below. Call before you dig.

UNTIL SUCH TIME AS THESE DRAWINGS ARE APPROVED BY THE APPROPRIATE REVIEWING AGENCIES, JR ENGINEERING APPROVES THEIR USE ONLY FOR THE PURPOSES DESIGNATED BY WRITTEN AUTHORIZATION.

PREPARED FOR
GATEWAY TRUCKING, LLC
235 S. FRANCEVILLE COAL MINE RD
COLORADO SPRINGS, CO 80929
ATTN: PERRY HASTINGS
602-558-0846
HASTINGSCONTRACTINGCO@GMAIL.COM

J·R ENGINEERING
A Westrian Company
Centennial 303-740-9393 • Colorado Springs 719-593-2593
Fort Collins 970-491-9888 • www.jrengineering.com

No.	REVISION	BY	DATE

H-SCALE	VARIES
V-SCALE	VARIES
DATE	11/03/21
DESIGNED BY	GAG
DRAWN BY	GAG
CHECKED BY	

GATEWAY TRUCKING SITE DEVELOPMENT PLAN

POND DETAILS

SHEET 5 OF 9

JOB NO. 25215.00

X:\2520000.all\2521500\Drawings\Sheet Dwgs\GEC\2521500DT01.dwg, Pond-D002, 11/8/2021 11:50:11 AM, CS

GENERAL STRUCTURE NOTES:

ALL WORK SHALL BE DONE IN ACCORDANCE WITH CITY OR COUNTY STANDARD CONSTRUCTION SPECIFICATIONS.
EXCEPT AS SHOWN IN THE PLANS, STRUCTURE EXCAVATION AND BACKFILL SHALL BE IN ACCORDANCE WITH CDOT M-206-1, AND M-206-2 EXPANSION JOINT MATERIAL SHALL MEET AASHTO SPECIFICATION M-213

THE INFORMATION SHOWN ON THESE PLANS CONCERNING THE TYPE AND LOCATION OF UNDERGROUND UTILITIES IS NOT GUARANTEED TO BE ACCURATE OR ALL INCLUSIVE. THE CONTRACTOR IS RESPONSIBLE FOR MAKING HIS OWN DETERMINATION AS TO THE TYPE AND LOCATION OF UNDERGROUND UTILITIES AS MAY BE NECESSARY TO AVOID DAMAGE THERETO. THE CONTRACTOR SHALL CONTACT THE UTILITY NOTIFICATION CENTER OF COLORADO A 1-800-922-1987 AT LEAST 2 DAYS (NOT INCLUDING THE DAY OF NOTIFICATION) PRIOR TO ANY EXCAVATION OF OTHER.

THE CONTRACTOR IS SOLELY RESPONSIBLE FOR DESIGNING AND PROVIDING ALL BRACING AND SHORING AS REQUIRED FOR THE PROTECTION OF LIFE AND PROPERTY DURING CONSTRUCTION. THE CONTRACTOR IS SOLELY RESPONSIBLE FOR THE EXCAVATION PROCEDURES INCLUDING ANY SHORING REQUIRED FOR THE PROTECTION OF LIFE AND PROPERTY DURING CONSTRUCTION.

THE CONTRACTOR IS SOLELY RESPONSIBLE FOR ALL METHODS AND MEANS OF CONSTRUCTION AS WELL AS ALL JOB SITE SAFETY & HEALTH PRECAUTIONS.

ALL SOILS WORK INCLUDING (BUT NOT LIMITED TO) PIER DRILLING AND CONSTRUCTION, SOILS EXCAVATION, FILL PLACEMENT, AND STRUCTURE BACKFILL SHALL BE IN ACCORDANCE WITH THE PROJECT GEOTECHNICAL REPORT, UNLESS MORE STRINGENT REQUIREMENTS ARE PRINTED ON THE "IRRIGATION NOTES".

BACKFILL SHALL NOT BEGIN UNTIL CONCRETE WALLS REACH COMPRESSION STRENGTH AT LEAST 80 PERCENT OF THE REQUIRED 28 DAY STRENGTH, 0.8fc'.

REINFORCED CONCRETE:
CLASS D CONCRETE: fc'=4,500 psi
REINFORCING STEEL: fy=60,000 psi
ALL CAST-IN-PLACE CONCRETE SHALL BE CLASS D UNLESS NOTED OTHERWISE.

REINFORCING BARS SHALL CONFORM TO ASTM A615, GRADE 60 U.N.O.
REINFORCING BARS TO BE WELDED SHALL CONFORM TO ASTM A706, GRADE 60.
ALL REINFORCING, EXCEPT PIER REINFORCING, SHALL BE EPOXY COATED AND SHALL CONFORM TO ASTM A775.
ALL REINFORCING SHALL HAVE 2" CONCRETE COVER, U.N.O. ON PLANS, 3" AGAINST GROUND (BOTTOM SLAB)
ALL REINFORCING SHALL BE HOOKED AROUND CORNERS AND LAPPED, SEE DETAILS.
ALL LAP SPLICE LOCATIONS SHALL BE SUBMITTED TO ENGINEER FOR REVIEW AND APPROVAL PRIOR TO CONSTRUCTION.

THE FOLLOWING TABLE GIVES THE MINIMUM CLASS B (STAGGERED) LAP SPLICE LENGTH FOR EPOXY COATED REINFORCING BARS PLACE IN ACCORDANCE WITH SUBSECTION 602.06. THESE SPLICE LENGTHS SHALL BE INCREASED BY 25% FOR BARS SPACED AT LESS THAN 6" ON CENTER. INCREASED BY 40% FOR HORIZONTAL BARS WITH MORE THAN 12" OF CONCRETE BELOW (TOP BARS.), AND INCREASED BY 75% IF BOTH CONDITIONS EXIST. THE INCREASES ABOVE FOR #6 THRU #11 BARS MAY BE 25%, 13%, AND 42% RESPECTIVELY.

#4	1'-3"	#5	1'-7"
#6	2'-5"	#7	2'-10"
#8	3'-8"	#9	4'-8"
#10	5'-11"	#11	7'-3"

WHEN THE CONTRACTOR ELECTS TO SUBSTITUTE EPOXY COATED REINFORCEMENT FOR BLACK REINFORCING BARS. THE MINIMUM LAP SPLICE SHALL BE AS DESCRIBED ABOVE.

STATIONS, ELEVATIONS, AND DIMENSIONS CONTAINED IN THESE PLANS ARE CALCULATED FROM A RECENT FIELD SURVEY. THE CONTRACTOR SHALL VERIFY ALL DEPENDENT DIMENSIONS IN THE FIELD BEFORE ORDERING OR FABRICATING ANY MATERIAL.

THE CONTRACTOR SHALL SUBMIT REINFORCING STEEL PLACING DRAWINGS (PRIOR TO CONSTRUCTION) TO THE ENGINEER FOR REVIEW FOR CONFORMANCE WITH THE DESIGN DRAWINGS. THE DESIGN DRAWINGS SHALL GOVERN OVER PLACING DRAWINGS IN ALL CASES UNLESS MODIFICATIONS ARE APPROVED IN WRITING BY ENGINEER.

THE CONTRACTOR SHALL BE RESPONSIBLE FOR THE STABILITY OF THE STRUCTURE DURING CONSTRUCTION.

E.F. =	EACH FACE	O.F. =	OUTSIDE FACE
F.E. =	FAR FACE	T.&B. =	TOP AND BOTTOM
N.F. =	NEAR FACE	T.F. =	TOP FACE
I.F. =	INSIDE FACE	B.F. =	BOTTOM FACE
T.W. =	TWO WAY	T.F. =	TWO FACES
E.S. =	EACH SIDE	Lp =	LAP LENGTH

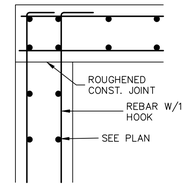

TYPICAL TOP CORNER WALL SECTION DETAIL

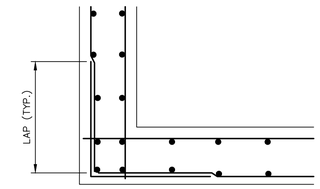

TYPICAL WALL CORNER PLAN VIEW

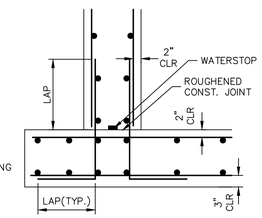

TYPICAL BOTTOM CORNER WALL SECTION DETAIL

CAST-IN-PLACE STRUCTURAL NOTES:

1. ALL CONSTRUCTION JOINTS SHALL BE THOROUGHLY CLEANED BEFORE FRESH CONCRETE IS POURED.
2. ALL CONSTRUCTION JOINTS NOT SHOWN ON THE PLANS SHALL BE APPROVED BY THE ENGINEER.
3. THE CONTRACTOR IS RESPONSIBLE FOR THE STABILITY OF THE STRUCTURE DURING CONSTRUCTION.
4. DO NOT BACKFILL UNTIL CONCRETE HAS REACHED DESIGN STRENGTH, F'c.
5. ALL EXPOSED CONCRETE CORNERS SHALL BE CHAMFERED ¾".
6. CONTRACTOR SHALL SUBMIT STEEL REINFORCING SHOP DRAWINGS FOR ALL CAST-IN-PLACE STRUCTURES FOR ENGINEER'S APPROVAL PRIOR TO CONSTRUCTION.
7. HEADWALLS FOR PIPES SHALL BE CONSTRUCTED PER CDOT M-601-10.
8. WINGWALLS SHALL BE CONSTRUCTED PER CDOT M-601-20.

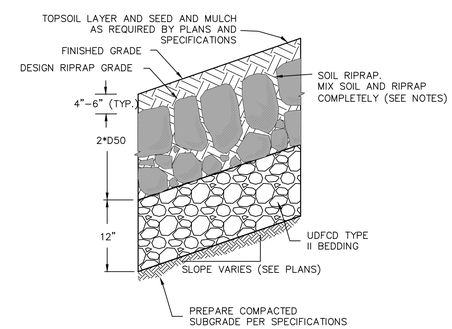

SOIL RIPRAP EMBANKMENT PROTECTION WITH BEDDING TYP. SECTION
N.T.S.

TYPE VL RIPRAP

INTERMEDIATE ROCK DIMENSION (IN.)	PERCENT PASSING (%)
12	70-100
9	50-70
6	35-50
2	2-10

*TYPE VL RIPRAP D50=6".
D50 = MEAN PARTICLE SIZE (INTERMEDIATE DIMENSION) BY WEIGHT.

TYPE L RIPRAP

INTERMEDIATE ROCK DIMENSION (IN.)	PERCENT PASSING (%)
15	70-100
12	50-70
9	35-50
3	2-10

*TYPE L RIPRAP D50=9".
D50 = MEAN PARTICLE SIZE (INTERMEDIATE DIMENSION) BY WEIGHT.

RIPRAP NOTES:

1. SOIL RIPRAP DETAILS ARE APPLICABLE TO SLOPED AREAS. REFER TO THE SITE PLAN ACTUAL LOCATION AND LIMITS.
2. MIX UNIFORMLY 65% RIPRAP BY VOLUME WITH 35% OF APPROVED SOIL BY VOLUME PRIOR TO PLACEMENT.
3. PLACE STONE-SOIL MIX TO RESULT IN SECURELY INTERLOCKED ROCK AT THE DESIGN THICKNESS AND GRADE. COMPACT AND LEVEL TO ELIMINATE ALL VOIDS AND ROCKS PROJECTING ABOVE DESIGN RIPRAP TOP GRADE.
4. CRIMP OR TACKIFY MULCH OR USE APPROVED HYDROMULCH AS CALLED FOR IN THE PLANS AND SPECIFICATIONS.
5. ROCK SHALL BE HARD, DURABLE, ANGULAR IN SHAPE, AND FREE FROM CRACKS, OVERBURDEN, SHALE, AND ORGANIC MATTER.
6. NEITHER BREADTH NOR THICKNESS OF A SINGLE STONE SHOULD BE LESS THAN ONE-THIRD ITS LENGTH, AND ROUNDED STONE SHOULD BE AVOIDED.
7. THE ROCK SHOULD SUSTAIN A LOSS OF NOT MORE THAN 40% AFTER 500 REVOLUTIONS IN AN ABRASION TEST (LOS ANGELES MACHINE ASTM C-535-69) AND SHOULD SUSTAIN A LOSS OF NOT MORE THAN 10% AFTER 12 CYCLES OF FREEZING AND THAWING (AASHTO TEST 103 FOR LEDGE ROCK PROCEDURE A).
8. ROCK HAVING A MINIMUM SPECIFIC GRAVITY OF 2.65 IS PREFERRED; HOWEVER, IN NO CASE SHOULD ROCK HAVE A SPECIFIC GRAVITY LESS THAN 2.50.

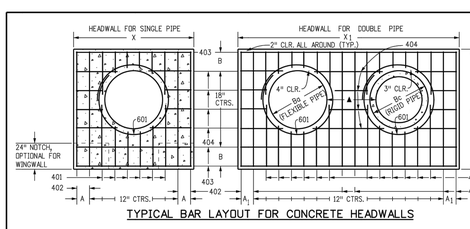

TYPICAL BAR LAYOUT FOR CONCRETE HEADWALLS

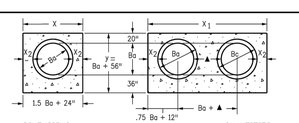

DIMENSIONS										QUANTITIES			
										CONCRETE		STEEL ■	
Ba IN.	Bc IN.	X FT.-IN.	A IN.	X1 FT.-IN.	A1 IN.	y FT.-IN.	B IN.	X2 IN.		SGL. CU. YD.	DBL. CU. YD.	SGL. LBS.	DBL. LBS.
54	65	8-9	8½	15-6	7	9-2	17	20		2.12	3.55	209	364
60	72	9-6	7	17-0	10	9-8	11	21		2.35	3.99	236	414
66	79	10-3	11½	18-6	7	10-2	14	22		2.60	4.44	249	453
72	86	11-0	10	20-0	10	10-8	17	23		2.85	4.91	270	476
78	93	11-9	8½	21-3	11	11-2	11	24		3.11	5.29	306	527
84	100	12-6	7	22-6	7	11-8	14	25		3.38	5.68	333	572
90	107	13-3	11½	23-9	8½	12-2	17	26		3.66	6.08	335	593
96	114	14-0	10	25-0	10	12-8	11	27		3.94	6.48	379	649
102	121	14-9	8½	26-3	11½	13-2	14	28		4.24	6.89	400	664
108	128	15-6	7	27-6	7	13-8	17	29		4.54	7.30	424	707

HEADWALL FOR RIGID ROUND PIPE

GENERAL NOTES

1. CONCRETE SHALL BE CLASS B.
2. HEADWALL SHALL BE PERPENDICULAR TO THE PIPE ℄ UNLESS OTHERWISE SHOWN ON THE PLANS. TABULATED DIMENSIONS AND QUANTITIES MUST BE ADJUSTED FOR SKEWED INSTALLATIONS.
3. FOR WINGWALL DETAILS, SEE STANDARD PLAN M-601-20.
4. VOLUME OCCUPIED BY PIPE HAS BEEN DEDUCTED FROM STEEL AND CONCRETE QUANTITIES.
5. EXPOSED CONCRETE CORNERS SHALL BE CHAMFERED ¾ IN.
6. ALL REINFORCING BARS SHALL HAVE A 2 IN. MINIMUM CLEARANCE.

▲ WHEN TWO OR MORE PIPES ARE LAID SIDE BY SIDE, THEY SHALL BE PLACED SO THAT THE ADJACENT PIPES WILL BE ½ INSIDE DIAMETER APART, OR ½ INSIDE SPAN APART, OR 3 FT. APART (INCLUDING WALL THICKNESS), WHICHEVER IS LESS.

■ ADD 0.89 x (X OR X1) (LB.) WHEN APRON IS REQUIRED.

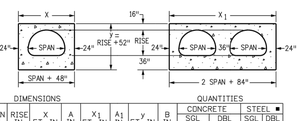

DIMENSIONS									QUANTITIES				
									CONCRETE		STEEL ■		
EQUIV. Ba IN.	SPAN IN.	RISE IN.	X FT.-IN.	A IN.	X1 FT.-IN.	A1 IN.	y FT.-IN.	B IN.	SGL. CU. YD.	DBL. CU. YD.	SGL. LBS.	DBL. LBS.	
72	81	59	10-9	8½	20-6	7	9-3	17½	2.72	5.10	250	467	
78	87	63	11-3	11½	21-6	7	9-7	10½	2.85	5.34	275	531	
84	95	67	11-9	8½	22-10	9	9-11	12½	3.08	5.79	290	547	
90	103	71	12-7	7½	24-2	11	10-3	15	3.30	6.21	321	591	
96	112	75	13-4	12	25-8	8	10-7	16½	3.52	6.65	314	606	
102	117	79	13-9	8½	26-6	7	10-11	9½	3.63	6.86	356	672	
108	128	83	14-8	8	28-4	12	11-3	11½	3.96	7.51	376	699	

HEADWALL FOR FLEXIBLE PIPE ARCH

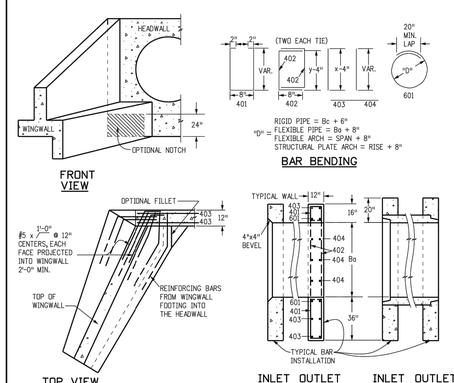

FRONT VIEW
BAR BENDING
TOP VIEW
WINGWALL CONNECTION
INLET OUTLET ENDS OF FLEXIBLE PIPE
INLET OUTLET ENDS OF RIGID PIPE

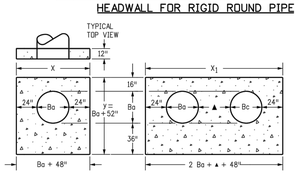

DIMENSIONS									QUANTITIES			
									CONCRETE		STEEL ■	
Ba IN.	X FT.-IN.	A IN.	X1 FT.-IN.	A1 IN.	y FT.-IN.	B IN.			SGL. CU. YD.	DBL. CU. YD.	SGL. LBS.	DBL. LBS.
54	8-6	7	15-3	11½	8-10	15			2.19	3.81	211	358
60	9-0	10	16-6	7	9-4	18			2.38	4.25	217	396
66	9-6	7	17-9	8½	9-10	12			2.58	4.70	252	454
72	10-0	10	19-0	10	10-4	15			2.78	5.17	255	472
78	10-6	7	20-0	10	10-10	18			2.98	5.56	278	499
84	11-0	10	21-0	10	11-4	12			3.19	5.95	297	553
90	11-6	7	22-0	10	11-10	15			3.40	6.36	317	517
96	12-0	10	23-0	10	12-4	18			3.62	6.79	321	597
102	12-6	7	24-0	10	12-10	12			3.84	7.21	364	663
108	13-0	10	25-0	10	13-4	15			4.06	7.63	362	678

HEADWALL FOR FLEXIBLE ROUND PIPE

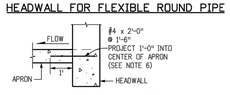

WHEN APRON IS REQUIRED

DIMENSIONS									QUANTITIES			
									CONCRETE		STEEL ■	
EQUIV. Ba IN.	SPAN FT.-IN.	RISE FT.-IN.	X FT.-IN.	A IN.	X1 FT.-IN.	A1 IN.	y FT.-IN.	B IN.	SGL. CU. YD.	DBL. CU. YD.	SGL. LBS.	DBL. LBS.
66	6-1	4-7	10-1	10½	19-2	11	8-11	15½	2.52	4.70	232	424
75	7-0	5-1	11-0	10	21-0	10	9-5	9½	2.80	5.25	282	509
84	7-11	5-7	11-11	9½	22-10	9	9-11	12½	3.08	5.79	291	540
93	8-10	6-1	12-10	9	24-8	8	10-5	15½	3.36	6.33	309	622
102	9-9	6-7	13-9	8½	26-6	7	10-11	9½	3.63	6.86	379	673
111	10-11	7-1	14-11	9½	28-10	9	11-5	12½	4.05	7.67	377	711
120	11-10	7-7	15-10	9	30-8	8	11-11	15½	4.36	8.08	395	731
132	12-10	8-4	16-10	9	32-8	8	12-8	11	4.75	9.03	441	839
141	14-1	8-9	18-1	10½	35-2	11	13-1	13½	5.17	9.86	448	931
150	15-4	9-3	19-4	12	37-8	8	13-7	16½	5.69	10.88	490	953
159	15-10	9-10	19-10	9	38-8	8	14-2	11	5.89	11.25	534	1019

HEADWALL FOR STRUCTURAL PLATE ARCH

SKEW ANGLE A°	90	85	80	75	70	65	60	55	50	45	40	35	30
FACTOR (cosecA°)	1.000	1.004	1.015	1.035	1.064	1.103	1.155	1.221	1.305	1.414	1.556	1.743	2.000

SKEW FACTOR TABLE

Computer File Information	
Creation Date: 07/31/19	
Designer Initials: JBK	(R-X)
Last Modification Date: 07/31/19	(R-X)
Detailer Initials: LTA	(R-X)
CAD Ver.: MicroStation V8 Scale: Not to Scale Units: English	(R-X)

Sheet Revisions	
Date:	Comments

Colorado Department of Transportation
2829 West Howard Place
CDOT HQ, 3rd Floor
Denver, CO 80204
Phone: 303-757-9021 FAX: 303-757-9868
Project Development Branch JBK

HEADWALL FOR PIPES

Issued by the Project Development Branch: July 31, 2019

STANDARD PLAN NO.
M-601-10
Standard Sheet No. 1 of 1
Project Sheet Number:

UNTIL SUCH TIME AS THESE DRAWINGS ARE APPROVED BY THE APPROPRIATE REVIEWING AGENCIES, JR ENGINEERING APPROVES THEIR USE ONLY FOR THE PURPOSES DESIGNATED BY WRITTEN AUTHORIZATION.

PREPARED FOR
GATEWAY TRUCKING, LLC
235 S. FRANCEVILLE COAL MINE RD
COLORADO SPRINGS, CO 80929
ATTN: PERRY HASTINGS
602-558-0846
HASTINGSCONTRACTINGCO@GMAIL.COM

J·R ENGINEERING
A Westrian Company
Centennial 303-740-9393 • Colorado Springs 719-593-2593
Fort Collins 970-491-9888 • www.jrengineering.com

No.	REVISION	BY	DATE

H-SCALE	N/A
V-SCALE	N/A
DATE	11/03/21
DESIGNED BY	GAG
DRAWN BY	GAG
CHECKED BY	

GATEWAY TRUCKING SITE DEVELOPMENT PLAN
POND DETAILS

SHEET 6 OF 9
JOB NO. 25215.00

Know what's below. Call before you dig.

X:\2520000.all\2521500\Drawings\Sheet Dwgs\GEC\2521500DT01.dwg, Pond-D03, 11/8/2021 11:50:16 AM, CS

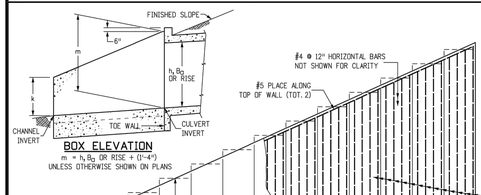

BOX ELEVATION
m = 1, h, Bo (RISE = 1' - 4')
UNLESS OTHERWISE SHOWN ON PLANS

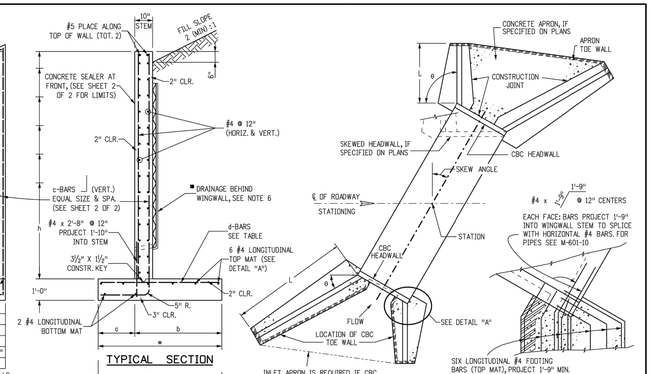

TYPICAL SECTION

TYPICAL CULVERT LAYOUT

INLET APRON IS REQUIRED IF CBC IS USED AS AN ANIMAL PASS

DETAIL "A"

h =	2'	3'	4'	5'	6'	7'	8'	9'	10'	11'	■ 12'	■ 13'	■ 14'	
a =	1'-0"	1'-2"	1'-4"	1'-6"	1'-8"	1'-10"	2'-0"	2'-2"	2'-4"	2'-6"	2'-8"	2'-10"	3'-0"	
b =	1'-8"	2'-0"	2'-4"	2'-8"	3'-0"	3'-4"	3'-8"	4'-0"	4'-4"	4'-8"	5'-0"	5'-4"	5'-8"	
w =	2'-8"	3'-2"	3'-8"	4'-2"	4'-8"	5'-2"	5'-8"	6'-2"	6'-8"	7'-2"	7'-8"	8'-2"	8'-8"	
d-BARS	#4 @ 9"	#4 @ 9"	#4 @ 9"	#4 @ 9"	#4 @ 9"	#4 @ 9"	#5 @ 11"	#5 @ 10"	#5 @ 10"	#5 @ 8"	#6 @ 8"	#7 @ 9"	#7 @ 7"	
✱ CONC. CY/LF	0.161	0.210	0.259	0.309	0.358	0.407	0.457	0.506	0.556	0.605	0.654	0.704	0.753	

✱ DOES NOT INCLUDE TOE WALL QUANTITIES
SEE SHEET 2 OF 2 FOR REINFORCING STEEL QUANTITY

■ REQUIRED DRAINAGE BEHIND WINGWALLS SEE NOTE 6

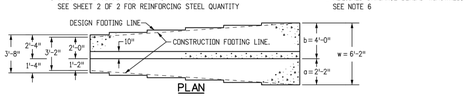

PLAN

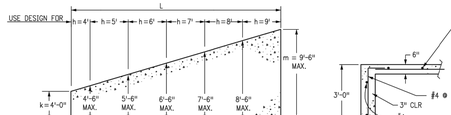

ELEVATION
DESIGN EXAMPLE

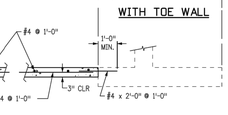

WITH TOE WALL

APRON TOE WALL

QUANTITIES FOR TOE WALL ONLY
CONCRETE 0.049 CU. YD./LIN. FT.
REINFORCEMENT 5.1 LB./LIN. FT.

WITH CONCRETE APRON

REINFORCEMENT 1.34 LB./SQ. FT.

DESIGN DATA:

AASHTO LRFD EIGHTH EDITION, 2017
DESIGN METHOD: LOAD AND RESISTANCE FACTOR DESIGN, YIELD LINE METHOD

REINFORCED CONCRETE:
CONCRETE CLASS D (BOX CULVERT): f'_c = 4,500 PSI
REINFORCING STEEL: f_y = 60,000 PSI

LOADING:
AT-REST EARTH (FLUID) PRESSURE FOR CONCRETE STEM DESIGN = 55 PCF FOR 2 (MIN.) : 1 SLOPED BACKFILL
ACTIVE EARTH (FLUID) PRESSURE FOR CONCRETE FOOTING DESIGN = 40 PCF FOR 2 (MIN.) : 1 SLOPED BACKFILL
LIVE LOAD SURCHARGE = 2'
MINIMUM RESISTANCE FOR SOIL BEARING = 5.5 KSF
SOIL BEARING RESISTANCE FACTOR = 0.45

GENERAL NOTES:

1. ALL EXPOSED CONCRETE CORNERS SHALL BE CHAMFERED ¾ IN.
2. WINGWALL FOOTING AND FLOOR OF BOX CULVERT SHALL BE PLACED MONOLITHICALLY.
3. DIMENSIONS "h", "k", "L", "m" AND ANGLE "θ" FOR WINGWALL SHALL BE AS SHOWN ON THE PLANS.
4. MINIMUM CLASS B LAP SPLICE LENGTH FOR BLACK REINFORCING BARS:

BAR SIZE:	#4	#5	#6	#7
SPLICE LENGTH:	1'- 6"	1'-11"	2'-3"	2'-7"

5. DESIGN DOES NOT CONSIDER ANY SCOUR EFFECTS.
6. WINGWALL DRAIN SHALL BE REQUIRED IF "h" ≥ 12.0 FT., SEE SHEET 2 OF 2 FOR DETAILS.

Computer File Information		Sheet Revisions	
Creation Date: 07/31/19		Date:	Comments
Designer Initials: JBK	(R-X)		
Last Modification Date: 07/31/19	(R-X)		
Detailer Initials: LTA	(R-X)		
CAD Ver.: MicroStation V8 Scale: Not to Scale Units: English	(R-X)		

Colorado Department of Transportation
2829 West Howard Place
CDOT HQ, 3rd Floor
Denver, CO 80204
Phone: 303-757-9021 FAX: 303-757-9868
Project Development Branch JBK

WINGWALLS FOR PIPE OR BOX CULVERTS

Issued by the Project Development Branch: July 31, 2019

STANDARD PLAN NO. M-601-20
Standard Sheet No. 1 of 2
Project Sheet Number:

c-BARS AND REINFORCING STEEL QUANTITY (EXCLUDE TOE WALL)

✱ REINFORCING STEEL QUANTITY INCLUDES STEM AND FOOTING QUANTITIES, BUT DOES NOT INCLUDE TOE WALL QUANTITIES.

L (MULTIPLE OF m)		≤ (1.0 x m)		≤ (1.25 x m)		≤ (1.5 x m)		≤ (1.75 x m)		≤ (2.0 x m)		≤ (2.25 x m)		≤ (2.5 x m)		≤ (2.75 x m)		≤ (3.0 x m)		≤ (3.25 x m)		≤ (3.5 x m)	
m (FT)	k (FT)	c-BARS	✱ REINF. LB./L.F.	c-BARS	✱ REINF. LB./L.F.	c-BARS	✱ REINF. LB./L.F.	c-BARS	✱ REINF. LB./L.F.	c-BARS	✱ REINF. LB./L.F.	c-BARS	✱ REINF. LB./L.F.	c-BARS	✱ REINF. LB./L.F.	c-BARS	✱ REINF. LB./L.F.	c-BARS	✱ REINF. LB./L.F.	c-BARS	✱ REINF. LB./L.F.	c-BARS	✱ REINF. LB./L.F.
14	4	#4 @ 10"	53.60	#5 @ 10"	57.95	#5 @ 10"	57.10	#5 @ 8"	60.22	#5 @ 7"	62.43	#5 @ 7"	62.09	#5 @ 6"	65.38	#5 @ 6"	65.15	#6 @ 8"	67.10	#6 @ 8"	66.94	#6 @ 7"	70.66
	5	#4 @ 10"	55.86	#5 @ 10"	60.46	#5 @ 10"	59.60	#5 @ 8"	62.89	#5 @ 7"	65.23	#5 @ 7"	64.88	#5 @ 6"	68.34	#5 @ 6"	68.11	#6 @ 8"	70.17	#6 @ 8"	70.00	#6 @ 7"	73.90
	6	#4 @ 10"	64.43	#5 @ 10"	70.60	#5 @ 10"	69.69	#5 @ 8"	74.93	#6 @ 8"	74.45	#6 @ 7"	78.30	#6 @ 6"	83.64	#6 @ 6"	83.40	#6 @ 6"	83.22	#6 @ 6"	83.05	#7 @ 7"	89.64
	7	#4 @ 10"	67.29	#5 @ 10"	73.76	#5 @ 10"	72.83	#6 @ 8"	78.32	#6 @ 8"	77.84	#6 @ 7"	81.87	#6 @ 6"	87.45	#6 @ 6"	87.21	#6 @ 6"	87.02	#6 @ 6"	86.86	#7 @ 7"	93.73
	8	#5 @ 8"	74.71	#6 @ 8"	83.46	#6 @ 7"	87.09	#6 @ 6"	92.54	#7 @ 7"	99.47	#7 @ 7"	99.08	#7 @ 6"	107.11	#7 @ 6"	106.86	#7 @ 6"	106.66	#7 @ 6"	106.49	#7 @ 6"	106.35
	9	#5 @ 8"	78.10	#6 @ 8"	87.23	#6 @ 7"	91.03	#6 @ 6"	96.72	#7 @ 7"	103.93	#7 @ 7"	103.54	#7 @ 6"	111.90	#7 @ 6"	111.65	#7 @ 6"	111.45	#7 @ 6"	111.28	#7 @ 6"	111.13
13	4	#4 @ 10"	50.51	#4 @ 10"	49.25	#5 @ 10"	53.71	#5 @ 10"	53.09	#5 @ 10"	52.36	#5 @ 9"	53.85	#5 @ 8"	55.54	#5 @ 7"	57.85	#5 @ 7"	57.67	#5 @ 7"	57.51	#6 @ 9"	59.93
	5	#4 @ 10"	52.66	#4 @ 10"	51.37	#5 @ 10"	56.09	#5 @ 10"	55.46	#5 @ 10"	54.99	#5 @ 9"	56.29	#5 @ 8"	58.08	#5 @ 7"	60.51	#5 @ 7"	60.33	#5 @ 7"	60.17	#6 @ 9"	62.72
	6	#4 @ 10"	54.92	#5 @ 10"	59.48	#5 @ 10"	60.31	#6 @ 9"	67.56	#6 @ 9"	67.08	#6 @ 9"	66.70	#6 @ 8"	69.53	#6 @ 8"	69.28	#6 @ 7"	73.12	#6 @ 7"	72.95	#6 @ 7"	72.81
	7	#4 @ 10"	57.36	#5 @ 10"	62.16	#5 @ 9"	63.05	#6 @ 9"	70.66	#6 @ 9"	70.16	#6 @ 9"	69.78	#6 @ 8"	72.75	#6 @ 8"	72.50	#6 @ 7"	76.52	#6 @ 7"	76.35	#6 @ 7"	76.20
	8	#5 @ 10"	66.39	#6 @ 10"	72.82	#6 @ 8"	77.97	#6 @ 7"	81.68	#6 @ 7"	81.19	#6 @ 6"	86.67	#6 @ 6"	86.37	#7 @ 7"	93.18	#7 @ 7"	92.97	#7 @ 7"	92.80	#7 @ 7"	92.64
	9	#5 @ 10"	69.37	#6 @ 10"	76.10	#6 @ 8"	81.49	#6 @ 7"	85.37	#6 @ 7"	84.87	#6 @ 6"	90.59	#6 @ 6"	90.29	#7 @ 7"	97.39	#7 @ 7"	97.18	#7 @ 7"	97.00	#7 @ 7"	96.85
12	2	#4 @ 10"	43.91	#4 @ 10"	42.65	#4 @ 10"	41.82	#4 @ 10"	41.22	#4 @ 10"	40.78	#4 @ 9"	41.29	#5 @ 10"	44.61	#5 @ 10"	44.37	#5 @ 10"	44.18	#5 @ 10"	44.01	#5 @ 10"	43.87
	3	#4 @ 10"	45.82	#4 @ 10"	44.55	#4 @ 10"	43.71	#4 @ 10"	43.11	#4 @ 10"	42.66	#4 @ 9"	43.22	#5 @ 10"	46.75	#5 @ 10"	46.51	#5 @ 10"	46.32	#5 @ 10"	46.15	#5 @ 10"	46.01
	4	#4 @ 10"	47.80	#4 @ 10"	46.51	#4 @ 10"	45.65	#5 @ 10"	50.06	#5 @ 10"	49.59	#5 @ 10"	49.23	#5 @ 10"	48.94	#5 @ 10"	48.69	#5 @ 9"	50.00	#5 @ 8"	51.72	#5 @ 8"	51.57
	5	#4 @ 10"	49.84	#4 @ 10"	48.53	#4 @ 10"	47.66	#5 @ 10"	52.33	#5 @ 10"	51.85	#5 @ 10"	51.48	#5 @ 10"	51.19	#5 @ 10"	50.94	#5 @ 9"	52.33	#5 @ 8"	54.14	#5 @ 8"	54.00
	6	#4 @ 10"	51.99	#4 @ 10"	50.65	#5 @ 10"	55.34	#5 @ 8"	58.41	#5 @ 8"	57.93	#6 @ 10"	60.60	#6 @ 10"	60.29	#6 @ 9"	62.42	#6 @ 9"	62.22	#6 @ 9"	62.04	#6 @ 8"	64.89
	7	#4 @ 10"	54.30	#5 @ 10"	58.80	#5 @ 10"	57.87	#5 @ 8"	61.10	#5 @ 8"	60.61	#6 @ 10"	63.43	#6 @ 10"	63.11	#6 @ 9"	65.35	#6 @ 9"	65.15	#6 @ 9"	64.97	#6 @ 8"	67.96
	8	#5 @ 10"	62.91	#5 @ 10"	61.45	#5 @ 7"	67.46	#5 @ 6"	70.68	#5 @ 6"	70.20	#6 @ 7"	76.44	#6 @ 7"	76.13	#6 @ 7"	75.87	#6 @ 6"	81.30	#6 @ 6"	81.12	#6 @ 6"	80.98
	9	#5 @ 10"	65.64	#5 @ 10"	64.15	#5 @ 7"	70.44	#5 @ 6"	73.82	#5 @ 6"	73.33	#6 @ 7"	79.86	#6 @ 7"	79.54	#6 @ 7"	79.28	#6 @ 6"	84.95	#6 @ 6"	84.77	#6 @ 6"	84.62
11	2	#4 @ 10"	41.70	#4 @ 10"	40.42	#4 @ 10"	39.57	#4 @ 10"	38.96	#4 @ 10"	38.50	#4 @ 10"	38.15	#4 @ 10"	37.87	#4 @ 10"	37.63	#4 @ 9"	38.25	#5 @ 10"	41.46	#5 @ 10"	41.31
	3	#4 @ 10"	43.57	#4 @ 10"	42.27	#4 @ 10"	41.40	#4 @ 10"	40.79	#4 @ 10"	40.33	#4 @ 10"	39.97	#4 @ 10"	39.69	#4 @ 10"	39.45	#4 @ 9"	40.12	#5 @ 10"	43.54	#5 @ 10"	43.39
	4	#4 @ 10"	45.48	#4 @ 10"	44.18	#4 @ 10"	43.28	#4 @ 10"	42.66	#4 @ 9"	43.09	#5 @ 10"	46.57	#5 @ 10"	46.27	#5 @ 10"	46.02	#5 @ 10"	45.82	#5 @ 10"	45.65	#5 @ 10"	45.50
	5	#4 @ 10"	47.46	#4 @ 10"	46.10	#4 @ 10"	45.21	#4 @ 10"	44.58	#4 @ 9"	45.06	#5 @ 10"	48.74	#5 @ 10"	48.44	#5 @ 10"	48.19	#5 @ 10"	47.99	#5 @ 10"	47.81	#5 @ 10"	47.67
	6	#4 @ 10"	49.52	#4 @ 10"	48.14	#4 @ 9"	48.23	#5 @ 10"	51.88	#5 @ 10"	51.38	#5 @ 9"	52.57	#5 @ 9"	52.27	#5 @ 8"	53.99	#5 @ 8"	53.79	#5 @ 7"	56.16	#5 @ 7"	56.01
	7	#4 @ 10"	51.73	#4 @ 10"	50.31	#4 @ 9"	50.43	#5 @ 10"	54.29	#5 @ 10"	53.78	#5 @ 9"	55.04	#5 @ 9"	54.73	#5 @ 8"	56.55	#5 @ 8"	56.35	#5 @ 7"	58.84	#5 @ 7"	58.70
	8	#4 @ 10"	54.00	#5 @ 10"	58.44	#5 @ 10"	57.45	#5 @ 8"	60.64	#5 @ 7"	62.92	#5 @ 6"	66.25	#5 @ 6"	65.94	#5 @ 6"	65.69	#5 @ 6"	65.48	#5 @ 6"	67.57	#6 @ 7"	71.45
	9	#4 @ 10"	56.20	#5 @ 10"	60.87	#5 @ 10"	59.85	#5 @ 8"	63.21	#5 @ 7"	65.60	#5 @ 6"	69.09	#5 @ 6"	68.78	#5 @ 6"	68.52	#6 @ 8"	70.69	#6 @ 8"	70.51	#6 @ 7"	74.57
10	2	#4 @ 10"	39.84	#4 @ 10"	38.53	#4 @ 10"	37.65	#4 @ 10"	37.03	#4 @ 10"	36.57	#4 @ 10"	36.20	#4 @ 10"	35.91	#4 @ 10"	35.67	#4 @ 10"	35.48	#4 @ 9"	36.07	#4 @ 9"	35.93
	3	#4 @ 10"	41.68	#4 @ 10"	40.35	#4 @ 10"	39.47	#4 @ 10"	38.84	#4 @ 10"	38.36	#4 @ 10"	38.00	#4 @ 10"	37.71	#4 @ 10"	37.46	#4 @ 10"	37.27	#4 @ 9"	37.91	#4 @ 9"	37.76
	4	#4 @ 10"	43.58	#4 @ 10"	42.22	#4 @ 10"	41.31	#4 @ 10"	40.67	#4 @ 10"	40.19	#4 @ 10"	39.82	#4 @ 10"	39.53	#4 @ 10"	39.28	#4 @ 10"	39.08	#4 @ 9"	39.77	#4 @ 9"	39.63
	5	#4 @ 10"	45.53	#4 @ 10"	44.14	#4 @ 10"	43.31	#4 @ 10"	42.62	#4 @ 10"	42.07	#5 @ 10"	46.44	#5 @ 10"	46.13	#5 @ 10"	45.87	#5 @ 10"	45.67	#5 @ 10"	45.49	#5 @ 10"	45.34
	6	#4 @ 10"	47.58	#4 @ 10"	46.14	#4 @ 10"	45.20	#4 @ 10"	44.53	#4 @ 10"	44.03	#5 @ 10"	48.67	#5 @ 10"	48.35	#5 @ 10"	48.08	#5 @ 10"	47.88	#5 @ 10"	47.69	#5 @ 10"	47.54
	7	#4 @ 10"	49.79	#4 @ 10"	48.31	#4 @ 10"	47.34	#5 @ 10"	51.97	#5 @ 10"	51.45	#5 @ 10"	51.04	#5 @ 9"	52.29	#5 @ 9"	52.03	#5 @ 8"	53.81	#5 @ 8"	53.61	#5 @ 7"	56.00
	8	#4 @ 10"	52.06	#4 @ 10"	50.54	#4 @ 10"	49.54	#5 @ 10"	54.43	#5 @ 10"	53.89	#5 @ 10"	53.47	#5 @ 9"	54.80	#5 @ 9"	54.53	#5 @ 8"	56.39	#5 @ 8"	56.20	#5 @ 7"	58.72
9	2	#4 @ 10"	38.01	#4 @ 10"	36.75	#4 @ 10"	35.85	#4 @ 10"	35.21	#4 @ 10"	34.73	#4 @ 10"	34.36	#4 @ 10"	34.06	#4 @ 10"	33.81	#4 @ 10"	33.61	#4 @ 10"	33.44	#4 @ 10"	33.30
	3	#4 @ 10"	39.93	#4 @ 10"	38.56	#4 @ 10"	37.64	#4 @ 10"	36.99	#4 @ 10"	36.51	#4 @ 10"	36.13	#4 @ 10"	35.83	#4 @ 10"	35.58	#4 @ 10"	35.38	#4 @ 10"	35.21	#4 @ 10"	35.06
	4	#4 @ 10"	41.81	#4 @ 10"	40.40	#4 @ 10"	39.47	#4 @ 10"	38.81	#4 @ 10"	38.31	#4 @ 10"	37.93	#4 @ 10"	37.63	#4 @ 10"	37.37	#4 @ 10"	37.17	#4 @ 10"	36.99	#4 @ 10"	36.84
	5	#4 @ 10"	43.75	#4 @ 10"	42.30	#4 @ 10"	41.35	#4 @ 10"	40.67	#4 @ 10"	40.17	#4 @ 10"	39.78	#4 @ 10"	39.47	#4 @ 10"	39.20	#4 @ 9"	39.86	#5 @ 10"	43.28	#5 @ 10"	43.12
	6	#4 @ 10"	45.79	#4 @ 10"	44.30	#4 @ 10"	43.31	#4 @ 10"	42.62	#4 @ 10"	42.10	#4 @ 10"	41.71	#4 @ 10"	41.39	#4 @ 10"	41.12	#4 @ 9"	41.82	#5 @ 10"	45.46	#5 @ 10"	45.30
	7	#4 @ 10"	48.04	#4 @ 10"	46.50	#4 @ 10"	45.49	#4 @ 10"	44.77	#4 @ 10"	44.25	#4 @ 10"	43.86	#5 @ 10"	48.53	#5 @ 10"	48.24	#5 @ 10"	48.03	#5 @ 10"	47.84	#5 @ 10"	47.67
	8	#4 @ 10"	50.43	#4 @ 10"	48.84	#4 @ 10"	47.80	#4 @ 10"	47.06	#5 @ 10"	51.83	#5 @ 10"	51.40	#5 @ 10"	51.05	#5 @ 10"	50.77	#5 @ 10"	50.54	#5 @ 10"	50.35	#5 @ 10"	50.18
8	2	#4 @ 10"	36.41	#4 @ 10"	35.01	#4 @ 10"	34.08	#4 @ 10"	33.42	#4 @ 10"	32.92	#4 @ 10"	32.54	#4 @ 10"	32.23	#4 @ 10"	31.97	#4 @ 10"	31.77	#4 @ 10"	31.59	#4 @ 10"	31.44
	3	#4 @ 10"	38.23	#4 @ 10"	36.80	#4 @ 10"	35.85	#4 @ 10"	35.18	#4 @ 10"	34.67	#4 @ 10"	34.28	#4 @ 10"	33.97	#4 @ 10"	33.70	#4 @ 10"	33.50	#4 @ 10"	33.32	#4 @ 10"	33.17
	4	#4 @ 10"	40.09	#4 @ 10"	38.61	#4 @ 10"	37.64	#4 @ 10"	36.95	#4 @ 10"	36.44	#4 @ 10"	36.04	#4 @ 10"	35.72	#4 @ 10"	35.45	#4 @ 10"	35.25	#4 @ 10"	35.07	#4 @ 10"	34.91
	5	#4 @ 10"	41.99	#4 @ 10"	40.47	#4 @ 10"	39.47	#4 @ 10"	38.76	#4 @ 10"	38.24	#4 @ 10"	37.83	#4 @ 10"	37.50	#4 @ 10"	37.23	#4 @ 10"	37.02	#4 @ 10"	36.84	#4 @ 10"	36.68
	6	#4 @ 10"	43.97	#4 @ 10"	42.40	#4 @ 10"	41.36	#4 @ 10"	40.64	#4 @ 10"	40.10	#4 @ 10"	39.68	#4 @ 10"	39.35	#4 @ 10"	39.07	#4 @ 9"	43.33	#5 @ 10"	43.13	#5 @ 10"	42.96
	7	#4 @ 10"	46.19	#4 @ 10"	44.56	#4 @ 10"	43.49	#4 @ 10"	42.74	#4 @ 10"	42.18	#4 @ 10"	41.75	#4 @ 10"	41.41	#4 @ 10"	41.13	#4 @ 9"	45.65	#5 @ 10"	45.45	#5 @ 10"	45.28
7	2	#4 @ 10"	34.90	#4 @ 10"	33.44	#4 @ 10"	32.47	#4 @ 10"	31.78	#4 @ 10"	31.27	#4 @ 10"	30.86	#4 @ 10"	30.54	#4 @ 10"	30.27	#4 @ 10"	30.06	#4 @ 10"	29.88	#4 @ 10"	29.72
	3	#4 @ 10"	36.73	#4 @ 10"	35.23	#4 @ 10"	34.23	#4 @ 10"	33.53	#4 @ 10"	33.00	#4 @ 10"	32.59	#4 @ 10"	32.26	#4 @ 10"	31.99	#4 @ 10"	31.78	#4 @ 10"	31.59	#4 @ 10"	31.43
	4	#4 @ 10"	38.59	#4 @ 10"	37.04	#4 @ 10"	36.01	#4 @ 10"	35.29	#4 @ 10"	34.75	#4 @ 10"	34.33	#4 @ 10"	33.99	#4 @ 10"	33.71	#4 @ 10"	33.50	#4 @ 10"	33.31	#4 @ 10"	33.14
	5	#4 @ 10"	40.48	#4 @ 10"	38.86	#4 @ 10"	37.80	#4 @ 10"	37.06	#4 @ 10"	36.50	#4 @ 10"	36.07	#4 @ 10"	35.73	#4 @ 10"	35.44	#4 @ 10"	35.22	#4 @ 10"	35.03	#4 @ 10"	34.86
	6	#4 @ 10"	42.39	#4 @ 10"	40.71	#4 @ 10"	39.61	#4 @ 10"	38.84	#4 @ 10"	38.26	#4 @ 10"	37.82	#4 @ 10"	37.47	#4 @ 10"	37.17	#4 @ 10"	36.95	#4 @ 10"	36.75	#4 @ 10"	36.58

Computer File Information		Sheet Revisions	
Creation Date: 07/31/19		Date:	Comments
Designer Initials: JBK	(R-X)		
Last Modification Date: 07/31/19	(R-X)		
Detailer Initials: LTA	(R-X)		
CAD Ver.: MicroStation V8 Scale: Not to Scale Units: English	(R-X)		

Colorado Department of Transportation
2829 West Howard Place
CDOT HQ, 3rd Floor
Denver, CO 80204
Phone: 303-757-9021 FAX: 303-757-9868
Project Development Branch JBK

WINGWALLS FOR PIPE OR BOX CULVERTS

Issued by the Project Development Branch: July 31, 2019

STANDARD PLAN NO. M-601-20
Standard Sheet No. 2 of 2
Project Sheet Number:

EXAMPLE:

SELECT THE c-BARS SIZE, SPACING AND STEEL QUANTITY FOR A 25.0 FEET LONG WINGWALL WITH m = 11.8 FT. AND k = 6.3 FT.

SOLUTION:

1. DETERMINE WINGWALL LENGTH IN MULTIPLE OF m:
   L / m = 25.0 / 11.8 = 2.12
   L = (2.12 x m), USE L = (2.25 x m)
2. ROUND TO NEAREST WHOLE NUMBER FOR m AND k:
   m = 11.8 FT., USE m = 12.0 FT.
   k = 6.3 FT., USE k = 6.0 FT.
3. DETERMINE c-BARS BY USING THE TABLE:
   L = (2.25 x m)
   m = 12
   k = 6
   c-BARS: #6 @ 10"
   REINF. STEEL = 60.60 LB / LF
4. DETERMINE REINFORCING STEEL QUANTITY OF WHOLE WINGWALL:
   REINFORCING STEEL QUANTITY = 25.0 x 60.60 = 1,515 LB.

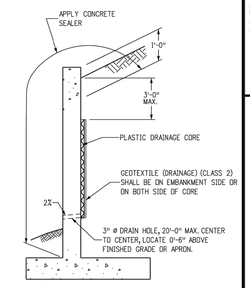

LIMITS OF CONCRETE SEALER AND WINGWALL DRAIN DETAILS

NOTES: 1. THE GEOCOMPOSITE SHALL BE SECURED TO THE WALL TO PREVENT MOVEMENT DURING BACKFILLING.
2. COST OF GEOCOMPOSITE DRAIN AND CONCRETE SEALER SHALL BE INCLUDED IN THE WORK.

Know what's below. Call before you dig.

UNTIL SUCH TIME AS THESE PLANS ARE APPROVED BY THE APPROPRIATE REVIEWING AGENCIES, JR ENGINEERING APPROVES THEIR USE ONLY FOR THE PURPOSES DESIGNATED BY WRITTEN AUTHORIZATION.

PREPARED FOR
GATEWAY TRUCKING, LLC
235 S. FRANCEVILLE COAL MINE RD
COLORADO SPRINGS, CO 80929
ATTN: PERRY HASTINGS
602-558-0846
HASTINGSCONTRACTING@GMAIL.COM

J·R ENGINEERING
A Westrian Company
Centennial 303-740-9393 • Colorado Springs 719-593-2593
Fort Collins 970-491-9888 • www.jrengineering.com

No.	REVISION	BY	DATE

H-SCALE	N/A
V-SCALE	N/A
DATE	11/03/21
DESIGNED BY	GAG
DRAWN BY	GAG
CHECKED BY	

GATEWAY TRUCKING SITE DEVELOPMENT PLAN
POND DETAILS

SHEET 7 OF 9
JOB NO. 25215.00

X:\2520000.all\2521500\Drawings\Sheet Dwgs\GEC\25215001701.dwg, Pond-D104, 11/3/2021 11:50:21 AM, CS

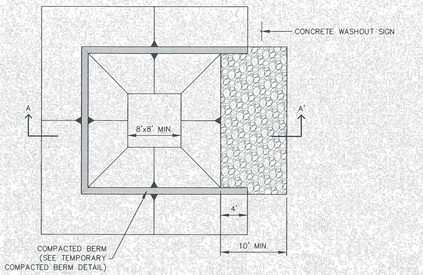

CONCRETE WASHOUT AREA PLAN

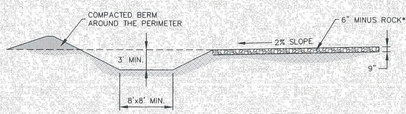

SECTION A-A'

*ROCK REQUIRED BASED ON SITE CONDITIONS AT THE DISCRETION OF THE GEC INSPECTOR

CWA

STORMWATER ENTERPRISE | CONCRETE WASHOUT AREA | APPROVED: | SWENT MANAGER | ISSUED: 10/7/19 | REVISED: 8/19/2020 | DRAWING NO. 900-CWA-1

INSTALLATION NOTES

1. SEE PLAN VIEW FOR:
   - LOCATION OF CONCRETE WASHOUT AREA
2. LOCATE AT LEAST 50' AWAY FROM STATE WATERS MEASURED HORIZONTALLY.
3. AN IMPERMEABLE LINER (16 MIL MINIMUM THICKNESS) IS REQUIRED IF CONCRETE WASH AREA IS LOCATED WITHIN 400' OF STATE WATERS OR 1000' OF WELLS OR DRINKING WATER SOURCES.
4. DO NOT LOCATE IN AREAS WHERE SHALLOW GROUNDWATER MAY BE PRESENT.
5. THE CONCRETE WASH AREA SHALL BE INSTALLED PRIOR TO CONCRETE PLACEMENT ON SITE.
6. CONCRETE WASH AREA SHALL INCLUDE A FLAT SUBSURFACE PIT THAT IS AT LEAST 8' BY 8'.
7. BERM SURROUNDING SIDES AND BACK OF CONCRETE WASH AREA SHALL HAVE A MINIMUM HEIGHT OF 2 FEET.
8. CONCRETE WASH AREA ENTRANCE SHALL BE SLOPED 2% TOWARDS THE CONCRETE WASH AREA.
9. SIGNS SHALL BE PLACED AT THE CONCRETE WASH AREA.
10. USE EXCAVATED MATERIAL FOR PERIMETER BERM CONSTRUCTION.

MAINTENANCE NOTES

1. FREQUENT OBSERVATIONS AND MAINTENANCE ARE NECESSARY TO MAINTAIN CONTROL MEASURES IN EFFECTIVE OPERATING CONDITION. INSPECTIONS AND CORRECTIVE MEASURES SHOULD BE DOCUMENTED THOROUGHLY.
2. THE CONCRETE WASH AREA SHALL BE REPAIRED, CLEANED, OR ENLARGED AS NECESSARY TO MAINTAIN CAPACITY FOR CONCRETE WASTE. CONCRETE MATERIALS ACCUMULATED IN THE PIT SHALL BE REMOVED ONCE THE MATERIALS HAVE REACHED A DEPTH OF ⅓ THE HEIGHT OF THE CONCRETE WASH AREA.
3. CONCRETE WASHOUT WATER, WASTED PIECES OF CONCRETE, AND ALL OTHER DEBRIS IN THE SUBSURFACE PIT SHALL BE TRANSPORTED FROM THE JOB SITE IN A WATER-TIGHT CONTAINER AND DISPOSED OF PROPERLY.
4. THE CONCRETE WASH AREA SHALL REMAIN IN PLACE UNTIL ALL CONCRETE FOR THE PROJECT IS PLACED.
5. PERMANENTLY STABILIZE AREA AFTER CONCRETE WASH AREA IS REMOVED.

CWA

STORMWATER ENTERPRISE | CONCRETE WASHOUT AREA | APPROVED: | SWENT MANAGER | ISSUED: 10/7/19 | REVISED: 8/19/2020 | DRAWING NO. 900-CWA-2

SEEDING & MULCHING

ALL SOIL TESTING, SOILS AMENDMENT AND FERTILIZER DOCUMENTATION, AND SEED LOAD AND BAG TICKETS MUST BE ADDED TO THE CSWMP.

SOIL PREPARATION

1. IN AREAS TO BE SEEDED, THE UPPER 6 INCHES OF THE SOIL MUST NOT BE HEAVILY COMPACTED, AND SHOULD BE IN FRIABLE CONDITION. LESS THAN 85% STANDARD PROCTOR DENSITY IS ACCEPTABLE. AREAS OF COMPACTION OR GENERAL CONSTRUCTION ACTIVITY MUST BE SCARIFIED TO A DEPTH OF 6 TO 12 INCHES PRIOR TO SPREADING TOPSOIL TO BREAK UP COMPACTED LAYERS AND PROVIDE A BLENDING ZONE BETWEEN DIFFERENT SOIL LAYERS.
2. AREAS TO BE PLANTED SHALL HAVE AT LEAST 4 INCHES OF TOPSOIL SUITABLE TO SUPPORT PLANT GROWTH.
3. THE CITY RECOMMENDS THAT EXISTING AND/OR IMPORTED TOPSOIL BE TESTED TO IDENTIFY SOIL DEFICIENCIES AND ANY SOIL AMENDMENTS NECESSARY TO ADDRESS THESE DEFICIENCIES. SOIL AMENDMENTS AND/OR FERTILIZERS SHOULD BE ADDED TO CORRECT TOPSOIL DEFICIENCIES BASED ON SOIL TESTING RESULTS.
4. TOPSOIL SHALL BE PROTECTED DURING THE CONSTRUCTION PERIOD TO RETAIN ITS STRUCTURE AVOID COMPACTION, AND TO PREVENT EROSION AND CONTAMINATION. STRIPPED TOPSOIL MUST BE STORED IN AN AREA AWAY FROM MACHINERY AND CONSTRUCTION OPERATIONS, AND CARE MUST BE TAKEN TO PROTECT THE TOPSOIL AS A VALUABLE COMMODITY. TOPSOIL MUST NOT BE STRIPPED DURING UNDESIRABLE WORKING CONDITIONS (E.G. DURING WET WEATHER OR WHEN SOILS ARE SATURATED). TOPSOIL SHALL NOT BE STORED IN SWALES OR IN AREAS WITH POOR DRAINAGE.

SEEDING

1. ALLOWABLE SEED MIXES ARE INCLUDED IN THE CITY OF COLORADO SPRINGS STORMWATER CONSTRUCTION MANUAL. ALTERNATIVE SEED MIXES ARE ACCEPTABLE IF INCLUDED IN AN APPROVED LANDSCAPING PLAN.
2. SEED SHOULD BE DRILL-SEEDED WHENEVER POSSIBLE.
   - SEED DEPTH MUST BE ¼ TO ½ INCHES WHEN DRILL-SEEDING IS USED.
3. BROADCAST SEEDING OR HYDRO-SEEDING WITH TACKIFIER MAY BE SUBSTITUTED ON SLOPES STEEPER THAN 3:1 OR ON OTHER AREAS NOT PRACTICAL TO DRILL SEED.
   - SEEDING RATES MUST BE DOUBLED FOR BROADCAST SEEDING OR INCREASED BY 50% IF USING A BRILLION DRILL OR HYDRO-SEEDING
   - BROADCAST SEEDING MUST BE LIGHTLY HAND-RAKED INTO THE SOIL

MULCHING

1. MULCHING SHOULD BE COMPLETED AS SOON AS PRACTICABLE AFTER SEEDING, HOWEVER PLANTED AREAS MUST BE MULCHED NO LATER THAN 14 DAYS AFTER PLANTING.
2. MULCHING REQUIREMENTS INCLUDE:
   - HAY OR STRAW MULCH
     - ONLY CERTIFIED WEED-FREE AND CERTIFIED SEED-FREE MULCH MAY BE USED. MULCH MUST BE APPLIED AT 2 TONS/ACRE AND ADEQUATELY SECURED BY CRIMPING AND/OR TACKIFIER.
     - CRIMPING MUST NOT BE USED ON SLOPES GREATER THAN 3:1 AND MULCH FIBERS MUST BE TUCKED INTO THE SOIL TO A DEPTH OF 3 TO 4 INCHES.
     - TACKIFIER MUST BE USED IN PLACE OF CRIMPING ON SLOPES STEEPER THAN 3:1.
   - HYDRAULIC MULCHING
     - HYDRAULIC MULCHING IS AN OPTION ON STEEP SLOPES OR WHERE ACCESS IS LIMITED.
     - IF HYDRO-SEEDING IS USED, MULCHING MUST BE APPLIED AS A SEPARATE, SECOND OPERATION.
     - WOOD CELLULOSE FIBERS MIXED WITH WATER MUST BE APPLIED AT A RATE OF 2,000 TO 2,500 POUNDS/ACRE, AND TACKIFIER MUST BE APPLIED AT A RATE OF 100 POUNDS/ACRE.
   - EROSION CONTROL BLANKET
     - EROSION CONTROL BLANKET MAY BE USED IN PLACE OF TRADITIONAL MULCHING METHODS.

SM

STORMWATER ENTERPRISE | SEEDING & MULCHING | APPROVED: | SWENT MANAGER | ISSUED: 10/7/19 | REVISED: 8/19/2020 | DRAWING NO. 900-SM

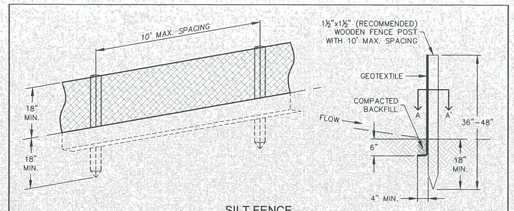

SILT FENCE

J-HOOK INSTALLATION

SECTION A-A'

INSTALLATION NOTES

1. SILT FENCE MUST BE PLACED ON A FLAT SURFACE 2'-5' AWAY FROM TOE OF THE SLOPE TO ALLOW FOR PONDING AND DEPOSITION.
2. COMPACT THE TRENCH USING A JUMPING JACK OR WHEEL ROLLING TO THE POINT THAT THE FENCE RESISTS BEING PULLED OUT OF THE GROUND BY HAND.
3. SILT FENCE SHALL BE TAUT WITH NO SAGS AFTER IT HAS BEEN ANCHORED.
4. FABRIC SHALL BE ATTACHED TO POSTS WITH 1" HEAVY DUTY STAPLES OR 1" NAILS. THESE SHOULD BE PLACED VERTICALLY DOWN THE POST, 3" APART.
5. THE PREFERRED INSTALLATION METHOD USES A TRENCHER OR SILT FENCE INSTALLATION DEVICE.
6. INSTALL SILT FENCE ALONG THE CONTOUR OF THE SLOPES OR IN A MANNER TO AVOID CREATING CONCENTRATED FLOW (SUCH AS A "J-HOOK" INSTALLATION).

MAINTENANCE NOTES

1. FREQUENT OBSERVATIONS AND MAINTENANCE ARE NECESSARY TO MAINTAIN CONTROL MEASURES IN EFFECTIVE OPERATING CONDITION. INSPECTIONS AND CORRECTIVE MEASURES SHOULD BE DOCUMENTED THOROUGHLY.
2. ACCUMULATED SEDIMENT MUST BE REMOVED WHEN THE HEIGHT REACHES ½ OF THE DESIGN HEIGHT OF THE SILT FENCE.
3. SILT FENCE MUST REMAIN UNTIL THE UPSTREAM DISTURBANCE AREA IS STABILIZED.
4. PERMANENTLY STABILIZE AREA AFTER SILT FENCE IS REMOVED.

SF

STORMWATER ENTERPRISE | SILT FENCE | APPROVED: | SWENT MANAGER | ISSUED: 10/7/19 | REVISED: 8/19/2020 | DRAWING NO. 900-SF

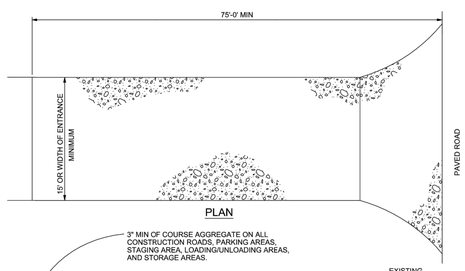

PLAN

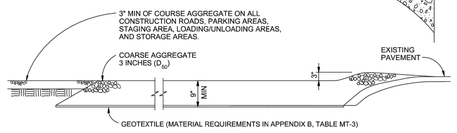

SECTION

VEHICLE TRACKING

NTS

VEHICLE TRACKING NOTES

INSTALLATION REQUIREMENTS

1. ALL ENTRANCES TO THE CONSTRUCTION SITE ARE TO BE STABILIZED PRIOR TO CONSTRUCTION BEGINNING.

2. CONSTRUCTION ENTRANCES ARE TO BE BUILT WITH AN APRON TO ALLOW FOR TURNING TRAFFIC, BUT SHOULD NOT BE BUILT OVER EXISTING PAVEMENT EXCEPT FOR A SLIGHT OVERLAP.

3. AREAS TO BE STABILIZED ARE TO BE PROPERLY GRADED AND COMPACTED PRIOR TO LAYING DOWN GEOTEXTILE AND STONE.

4. CONSTRUCTION ROADS, PARKING AREAS, LOADING/UNLOADING ZONES, STORAGE AREAS, AND STAGING AREAS ARE TO BE STABILIZED.

5. CONSTRUCTION ROADS ARE TO BE BUILT TO CONFORM TO SITE GRADES, BUT SHOULD NOT HAVE SIDE SLOPES OR ROAD GRADES THAT ARE EXCESSIVELY STEEP.

MAINTENANCE REQUIREMENTS

1. REGULAR INSPECTIONS ARE TO BE MADE OF ALL STABILIZED AREAS, ESPECIALLY AFTER STORM EVENTS.

2. STONES ARE TO BE REAPPLIED PERIODICALLY AND WHEN REPAIR IS NECESSARY.

3. SEDIMENT TRACKED ONTO PAVED ROADS IS TO BE REMOVED DAILY BY SHOVELING OR SWEEPING. SEDIMENT IS NOT TO BE WASHED DOWN STORM SEWER DRAINS.

4. STORM SEWER INLET PROTECTION IS TO BE IN PLACE, INSPECTED, AND CLEANED IF NECESSARY.

5. OTHER ASSOCIATED SEDIMENT CONTROL MEASURES ARE TO BE INSPECTED TO ENSURE GOOD WORKING CONDITION.

City of Colorado Springs Stormwater Quality	Figure VT-2 Vehicle Tracking Application Examples

3-54

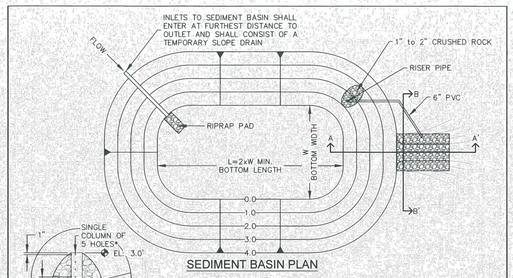

SEDIMENT BASIN PLAN

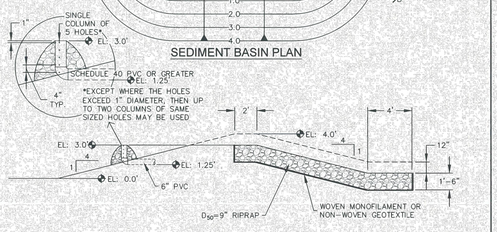

SECTION A-A'

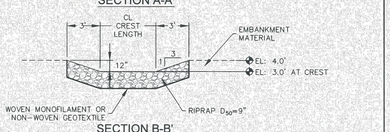

SECTION B-B'

TSB

STORMWATER ENTERPRISE | TEMPORARY SEDIMENT BASIN | APPROVED: | SWENT MANAGER | ISSUED: 10/7/19 | REVISED: 8/19/2020 | DRAWING NO. 900-TSB-1

TABLE SB-1, SIZING INFORMATION FOR STANDARD SEDIMENT BASIN

UPSTREAM DRAINAGE AREA (ROUNDED TO NEAREST ACRE), (AC)	BASIN BOTTOM WIDTH (W), (FT)	SPILLWAY CREST LENGTH (CL), (FT)	HOLE DIAMETER (HD), (IN)
1	12½	2	15/32
2	21	3	19/32
3	28	5	½
4	33½	6	9/16
5	38½	8	21/32
6	43	9	23/32
7	47¾	11	25/32
8	51	12	27/32
9	55	13	7/8
10	58¾	15	15/16
11	61	16	31/32
12	64	18	1
13	67½	19	1 1/16
14	70½	21	1 1/8
15	73¼	22	1 3/16

INSTALLATION NOTES

1. FOR STANDARD BASIN, BOTTOM DIMENSION MAY BE MODIFIED AS LONG AS BOTTOM AREA IS NOT REDUCED.
2. EMBANKMENT MATERIAL SHALL CONSIST OF SOIL FREE OF DEBRIS, ORGANIC MATERIAL, AND ROCKS OR CONCRETE GREATER THAN 3 INCHES, AND SHALL HAVE A MINIMUM OF 15 PERCENT BY WEIGHT PASSING THE No. 200 SIEVE.
3. EMBANKMENT MATERIAL SHALL BE COMPACTED TO AT LEAST 95 PERCENT OF MAXIMUM DENSITY IN ACCORDANCE WITH ASTM D-698.
4. PIPE SCHEDULE 40 OR GREATER SHALL BE USED.
5. THE DETAILS SHOWN ON THESE SHEETS PERTAIN TO STANDARD SEDIMENT BASIN(S) FOR DRAINAGE AREAS LESS THAN 15 ACRES. SEE CONSTRUCTION DRAWINGS FOR EMBANKMENT, STORAGE VOLUME, SPILLWAY, OUTLET, AND OUTLET PROTECTION DETAILS FOR ANY SEDIMENT BASIN(S) THAT HAVE BEEN INDIVIDUALLY DESIGNED FOR DRAINAGE AREAS LARGER THAN 15 ACRES. DESIGN CALCULATIONS MUST BE APPROVED PRIOR TO IMPLEMENTATION.

MAINTENANCE NOTES

1. FREQUENT OBSERVATIONS AND MAINTENANCE ARE NECESSARY TO MAINTAIN CONTROL MEASURES IN EFFECTIVE OPERATING CONDITION. INSPECTIONS AND CORRECTIVE MEASURES SHOULD BE DOCUMENTED THOROUGHLY.
2. SEDIMENT ACCUMULATED IN BASIN SHALL BE REMOVED AS NEEDED TO MAINTAIN CONTROL MEASURE EFFECTIVENESS, TYPICALLY WHEN SEDIMENT DEPTH REACHES ONE FOOT (I.E., TWO FEET BELOW SPILLWAY CREST).
3. SEDIMENT BASINS ARE TO REMAIN IN PLACE UNTIL THE UPSTREAM DISTURBED AREA IS PERMANENTLY STABILIZED.
4. PERMANENTLY STABILIZE AREA AFTER SEDIMENT BASIN REMOVAL.

TSB

STORMWATER ENTERPRISE | TEMPORARY SEDIMENT BASIN | APPROVED: | SWENT MANAGER | ISSUED: 10/7/19 | REVISED: 8/19/2020 | DRAWING NO. 900-TSB-2

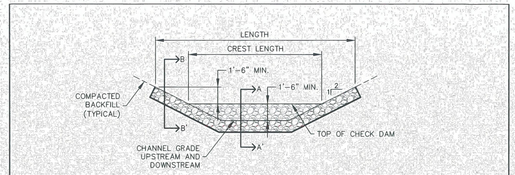

CHECK DAM ELEVATION VIEW

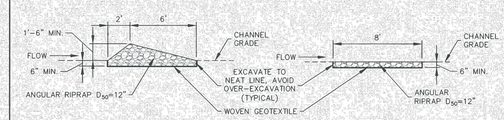

SECTION A-A' SECTION B-B'

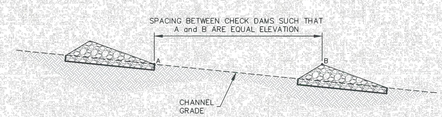

PROFILE

INSTALLATION NOTES

1. CHECK DAMS SHOULD BE INSTALLED BEFORE UPSTREAM LAND DISTURBING ACTIVITIES.
2. RIPRAP PAD SHOULD BE TRENCHED INTO GROUND BY A MINIMUM OF 6".

MAINTENANCE NOTES

1. FREQUENT OBSERVATIONS AND MAINTENANCE ARE NECESSARY TO MAINTAIN CONTROL MEASURES IN EFFECTIVE OPERATING CONDITION. INSPECTIONS AND CORRECTIVE MEASURES SHOULD BE DOCUMENTED THOROUGHLY.
2. ACCUMULATED SEDIMENT MUST BE REMOVED WHEN THE HEIGHT REACHES ½ THE HEIGHT OF THE CHECK DAM CREST.
3. CHECK DAMS MUST REMAIN UNTIL THE UPSTREAM DISTURBANCE AREA IS STABILIZED.
4. PERMANENTLY STABILIZE AREA AFTER CHECK DAMS ARE REMOVED IF REMOVAL IS REQUIRED.

CD

STORMWATER ENTERPRISE | CHECK DAM | APPROVED: | SWENT MANAGER | ISSUED: 10/7/19 | REVISED: 8/19/2020 | DRAWING NO. 900-CD

811 Know what's below. Call before you dig.

UNTIL SUCH TIME AS THESE PLANS ARE APPROVED BY THE APPROPRIATE REVIEWING AGENCIES, JR ENGINEERING APPROVES THEIR USE ONLY FOR THE PURPOSES DESIGNATED BY WRITTEN AUTHORIZATION.

PREPARED FOR
GATEWAY TRUCKING, LLC
235 S. FRANCEVILLE COAL MINE RD
COLORADO SPRINGS, CO 80929
ATTN: PERRY HASTINGS
602-558-0846
HASTINGSCONTRACTINGCO@GMAIL.COM

J·R ENGINEERING
A Westrian Company
Centennial 303-740-9393 • Colorado Springs 719-593-2593
Fort Collins 970-491-9888 • www.jrengineering.com

No.	REVISION	BY	DATE

H-SCALE	N/A
V-SCALE	N/A
DATE	11/03/21
DESIGNED BY	GAG
DRAWN BY	GAG
CHECKED BY	

GATEWAY TRUCKING SITE DEVELOPMENT PLAN

GEC DETAILS

SHEET 8 OF 9

JOB NO. 25215.00

X:\2520000.all\2521500\Drawings\Sheet Dwgs\GEC\25215000TD1.dwg, GEC-D001, 11/9/2021 11:50:28 AM, CS

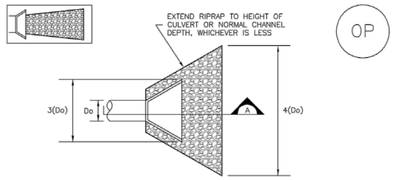

TEMPORARY OUTLET PROTECTION PLAN

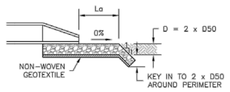

SECTION A

TABLE OP–1. TEMPORARY OUTLET PROTECTION SIZING TABLE

PIPE DIAMETER, Do (INCHES)	DISCHARGE, Q (CFS)	APRON LENGTH, Lo (FT)	RIPRAP D50 DIAMETER MIN (INCHES)
8	2.5 5	5 10	4 6
12	5 10	10 13	4 6
18	10 20 30 40	10 16 23 26	6 9 12 16
24	30 40 50 60	16 26 26 30	9 9 12 16

OP–1. TEMPORARY OUTLET PROTECTION

TEMPORARY OUTLET PROTECTION INSTALLATION NOTES

1. SEE PLAN VIEW FOR
   –LOCATION OF OUTLET PROTECTION.
   –DIMENSIONS OF OUTLET PROTECTION.

2. DETAIL IS INTENDED FOR PIPES WITH SLOPE ≤ 10%. ADDITIONAL EVALUATION OF RIPRAP SIZING AND OUTLET PROTECTION DIMENSIONS REQUIRED FOR STEEPER SLOPES.

3. TEMPORARY OUTLET PROTECTION INFORMATION IS FOR OUTLETS INTENDED TO BE UTILIZED LESS THAN 2 YEARS.

TEMPORARY OUTLET PROTECTION INSPECTION AND MAINTENANCE NOTES

1. INSPECT BMPs EACH WORKDAY, AND MAINTAIN THEM IN EFFECTIVE OPERATING CONDITION. MAINTENANCE OF BMPs SHOULD BE PROACTIVE, NOT REACTIVE. INSPECT BMPs AS SOON AS POSSIBLE (AND ALWAYS WITHIN 24 HOURS) FOLLOWING A STORM THAT CAUSES SURFACE EROSION, AND PERFORM NECESSARY MAINTENANCE.

2. FREQUENT OBSERVATIONS AND MAINTENANCE ARE NECESSARY TO MAINTAIN BMPs IN EFFECTIVE OPERATING CONDITION. INSPECTIONS AND CORRECTIVE MEASURES SHOULD BE DOCUMENTED THOROUGHLY.

3. WHERE BMPs HAVE FAILED, REPAIR OR REPLACEMENT SHOULD BE INITIATED UPON DISCOVERY OF THE FAILURE.

NOTE: MANY JURISDICTIONS HAVE BMP DETAILS THAT VARY FROM UDFCD STANDARD DETAILS. CONSULT WITH LOCAL JURISDICTIONS AS TO WHICH DETAIL SHOULD BE USED WHEN DIFFERENCES ARE NOTED.

(DETAILS ADAPTED FROM AURORA, COLORADO AND PREVIOUS VERSION OF VOLUME 3, NOT AVAILABLE IN AUTOCAD)

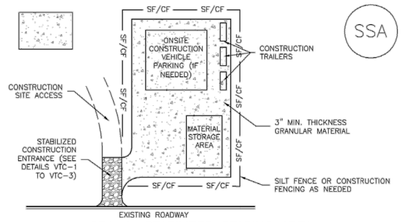

SSA–1. STABILIZED STAGING AREA

STABILIZED STAGING AREA INSTALLATION NOTES

1. SEE PLAN VIEW FOR
   –LOCATION OF STAGING AREA(S).
   –CONTRACTOR MAY ADJUST LOCATION AND SIZE OF STAGING AREA WITH APPROVAL FROM THE LOCAL JURISDICTION.

2. STABILIZED STAGING AREA SHOULD BE APPROPRIATE FOR THE NEEDS OF THE SITE. OVERSIZING RESULTS IN A LARGER AREA TO STABILIZE FOLLOWING CONSTRUCTION.

3. STAGING AREA SHALL BE STABILIZED PRIOR TO OTHER OPERATIONS ON THE SITE.

4. THE STABILIZED STAGING AREA SHALL CONSIST OF A MINIMUM 3" THICK GRANULAR MATERIAL.

5. UNLESS OTHERWISE SPECIFIED BY LOCAL JURISDICTION, ROCK SHALL CONSIST OF DOT SECT. #703, AASHTO #3 COARSE AGGREGATE OR 6" (MINUS) ROCK.

6. ADDITIONAL PERIMETER BMPs MAY BE REQUIRED INCLUDING BUT NOT LIMITED TO SILT FENCE AND CONSTRUCTION FENCING.

STABILIZED STAGING AREA MAINTENANCE NOTES

1. INSPECT BMPs EACH WORKDAY, AND MAINTAIN THEM IN EFFECTIVE OPERATING CONDITION. MAINTENANCE OF BMPs SHOULD BE PROACTIVE, NOT REACTIVE. INSPECT BMPs AS SOON AS POSSIBLE (AND ALWAYS WITHIN 24 HOURS) FOLLOWING A STORM THAT CAUSES SURFACE EROSION, AND PERFORM NECESSARY MAINTENANCE.

2. FREQUENT OBSERVATIONS AND MAINTENANCE ARE NECESSARY TO MAINTAIN BMPs IN EFFECTIVE OPERATING CONDITION. INSPECTIONS AND CORRECTIVE MEASURES SHOULD BE DOCUMENTED THOROUGHLY.

3. WHERE BMPs HAVE FAILED, REPAIR OR REPLACEMENT SHOULD BE INITIATED UPON DISCOVERY OF THE FAILURE.

4. ROCK SHALL BE REAPPLIED OR REGRADED AS NECESSARY IF RUTTING OCCURS OR UNDERLYING SUBGRADE BECOMES EXPOSED.

STABILIZED STAGING AREA MAINTENANCE NOTES

5. STABILIZED STAGING AREA SHALL BE ENLARGED IF NECESSARY TO CONTAIN PARKING, STORAGE, AND UNLOADING/LOADING OPERATIONS.

6. THE STABILIZED STAGING AREA SHALL BE REMOVED AT THE END OF CONSTRUCTION. THE GRANULAR MATERIAL SHALL BE REMOVED OR, IF APPROVED BY THE LOCAL JURISDICTION, USED ON SITE, AND THE AREA COVERED WITH TOPSOIL, SEEDED AND MULCHED OR OTHERWISE STABILIZED IN A MANNER APPROVED BY LOCAL JURISDICTION.

NOTE: MANY MUNICIPALITIES PROHIBIT THE USE OF RECYCLED CONCRETE AS GRANULAR MATERIAL FOR STABILIZED STAGING AREAS DUE TO DIFFICULTIES WITH RE–ESTABLISHMENT OF VEGETATION IN AREAS WHERE RECYCLED CONCRETE WAS PLACED.

NOTE: MANY JURISDICTIONS HAVE BMP DETAILS THAT VARY FROM UDFCD STANDARD DETAILS. CONSULT WITH LOCAL JURISDICTIONS AS TO WHICH DETAIL SHOULD BE USED WHEN DIFFERENCES ARE NOTED.

(DETAILS ADAPTED FROM DOUGLAS COUNTY, COLORADO, NOT AVAILABLE IN AUTOCAD)

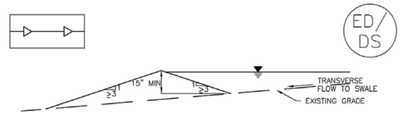

ED–1. COMPACTED UNLINED EARTH DIKE FORMED BY BERM

DS–1. COMPACTED UNLINED EXCAVATED SWALE

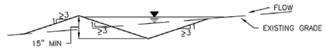

DS–2. COMPACTED UNLINED SWALE FORMED BY CUT AND FILL

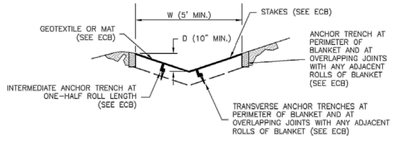

DS–3. ECB LINED SWALE (CUT AND FILL OR BERM)

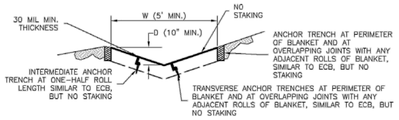

DS–4. SYNTHETIC LINED SWALE

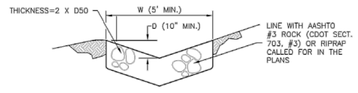

DS–5. RIPRAP LINED SWALE

EARTH DIKE AND DRAINAGE SWALE INSTALLATION NOTES

1. SEE SITE PLAN FOR:
   – LOCATION OF DIVERSION SWALE
   – TYPE OF SWALE (UNLINED, COMPACTED AND/OR LINED).
   – LENGTH OF EACH SWALE.
   – DEPTH, D, AND WIDTH, W DIMENSIONS.
   – FOR ECB/TRM LINED DITCH, SEE ECB DETAIL.
   – FOR RIPRAP LINED DITCH, SIZE OF RIPRAP, D50.

2. SEE DRAINAGE PLANS FOR DETAILS OF PERMANENT CONVEYANCE FACILITIES AND/OR DIVERSION SWALES EXCEEDING 2–YEAR FLOW RATE OR 10 CFS.

3. EARTH DIKES AND SWALES INDICATED ON SWMP PLAN SHALL BE INSTALLED PRIOR TO LAND–DISTURBING ACTIVITIES IN PROXIMITY.

4. EMBANKMENT IS TO BE COMPACTED TO 90% OF MAXIMUM DENSITY AND WITHIN 2% OF OPTIMUM MOISTURE CONTENT ACCORDING TO ASTM D698.

5. SWALES ARE TO DRAIN TO A SEDIMENT CONTROL BMP.

6. FOR LINED DITCHES, INSTALLATION OF ECB/TRM SHALL CONFORM TO THE REQUIREMENTS OF THE ECB DETAIL.

7. WHEN CONSTRUCTION TRAFFIC MUST CROSS A DIVERSION SWALE, INSTALL A TEMPORARY CULVERT WITH A MINIMUM DIAMETER OF 12 INCHES.

EARTH DIKE AND DRAINAGE SWALE MAINTENANCE NOTES

1. INSPECT BMPs EACH WORKDAY, AND MAINTAIN THEM IN EFFECTIVE OPERATING CONDITION. MAINTENANCE OF BMPs SHOULD BE PROACTIVE, NOT REACTIVE. INSPECT BMPs AS SOON AS POSSIBLE (AND ALWAYS WITHIN 24 HOURS) FOLLOWING A STORM THAT CAUSES SURFACE EROSION, AND PERFORM NECESSARY MAINTENANCE.

2. FREQUENT OBSERVATIONS AND MAINTENANCE ARE NECESSARY TO MAINTAIN BMPs IN EFFECTIVE OPERATING CONDITION. INSPECTIONS AND CORRECTIVE MEASURES SHOULD BE DOCUMENTED THOROUGHLY.

3. WHERE BMPs HAVE FAILED, REPAIR OR REPLACEMENT SHOULD BE INITIATED UPON DISCOVERY OF THE FAILURE.

4. SWALES SHALL REMAIN IN PLACE UNTIL THE END OF CONSTRUCTION; IF APPROVED BY LOCAL JURISDICTION, SWALES MAY BE LEFT IN PLACE.

5. WHEN A SWALE IS REMOVED, THE DISTURBED AREA SHALL BE COVERED WITH TOPSOIL, SEEDED AND MULCHED OR OTHERWISE STABILIZED IN A MANNER APPROVED BY LOCAL JURISDICTION.

(DETAIL ADAPTED FROM DOUGLAS COUNTY, COLORADO AND THE CITY OF COLORADO SPRINGS, COLORADO, NOT AVAILABLE IN AUTOCAD)

NOTE: MANY JURISDICTIONS HAVE BMP DETAILS THAT VARY FROM UDFCD STANDARD DETAILS. CONSULT WITH LOCAL JURISDICTIONS AS TO WHICH DETAIL SHOULD BE USED WHEN DIFFERENCES ARE NOTED.

Know what's below. Call before you dig.

UNTIL SUCH TIME AS THIS DRAWING ARE APPROVED BY THE APPROPRIATE REVIEWING AGENCIES, JR ENGINEERING APPROVES THEIR USE ONLY FOR THE PURPOSES DESIGNATED BY WRITTEN AUTHORIZATION.

PREPARED FOR
GATEWAY TRUCKING, LLC
235 S. FRANCEVILLE COAL MINE RD
COLORADO SPRINGS, CO 80929
ATTN: PERRY HASTINGS
602-558-0846
HASTINGSCONTRACTINGCO@GMAIL.COM

J·R ENGINEERING
A Westrian Company
Centennial 303-740-9393 • Colorado Springs 719-593-2593
Fort Collins 970-491-9888 • www.jrengineering.com

No.	REVISION	BY	DATE

H-SCALE	N/A
V-SCALE	N/A
DATE	11/03/21
DESIGNED BY	GAG
DRAWN BY	GAG
CHECKED BY	

GATEWAY TRUCKING SITE DEVELOPMENT PLAN
GEC DETAILS

SHEET 9 OF 9
JOB NO. 25215.00

X:\2520000.all\2521500\Drawings\Sheet Dwgs\GEC\2521500T01.dwg GEC-DI02, 11/8/2021 11:50:44 AM, CS