Revise title to Preliminary/Final Drainage report as the preliminary plan and final plat are running concurrently.

Revise to SP-226

FINAL DRAINAGE REPORT FOR
HIGH VIEW ESTATES
6665 WALKER ROAD
COLORADO SPRINGS, COLORADO 80908

TABLE OF CONTENTS

Engineer's Statement ..... Page 3

Purpose ..... Page 4

General Description ..... Page 4

Soils Condition ..... Page 4

Drainage Criteria ..... Page 4

Existing Drainage Conditions ..... Page 4

Developed Drainage Conditions ..... Page 5

FSEDB ..... Page 6

Floodplain Statement ..... Page 7

Construction Cost Opinion ..... Page 7

Drainage And Bridge Fees ..... Page 8

Maintenance ..... Page 8

Summary ..... Page 8

References ..... Page 8

APPENDICIES

Vicinity Map

Site Map

Soils Map

FEMA Floodplain Map

Hydrologic Calculations

Hydraulic Calculations

FSEDB Calculations

Drainage Maps

COLORADO LICENSED
L DUCETT
32339
PROFESSIONAL ENGINEER

7/22/2022

please sign and date below this statement

Collin Brones

Owner

954 Pinenut Court

Colorado Springs, CO 80921

Revise to Joshua Palmer.

please revise to preliminary/final where this occurs throughout the report

A sand filter basin is not shown nor are calculations provided. Also, please use the current UD detention worksheet.

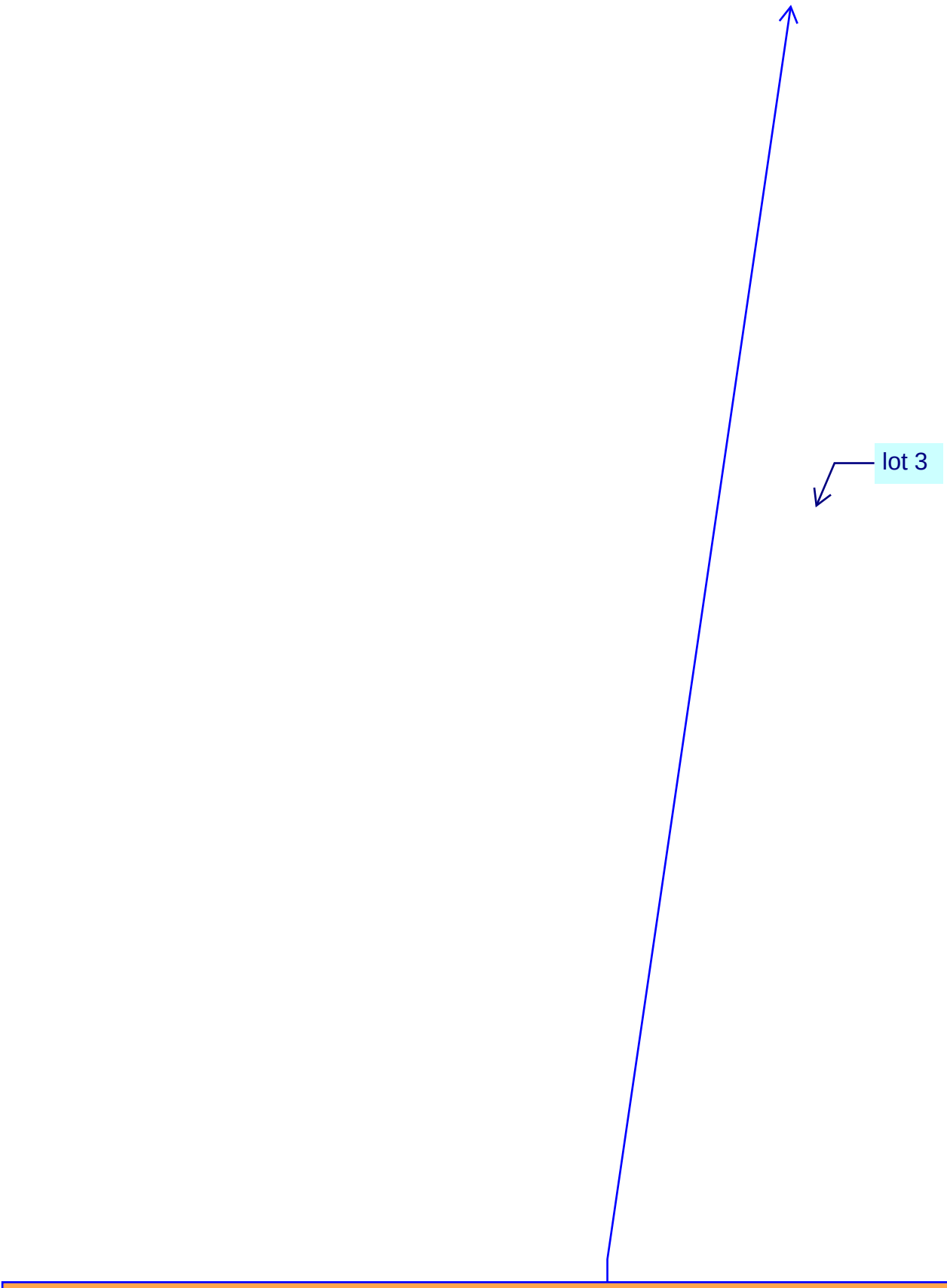

Please note: I acre runoff coefficients are producing elevated amounts of runoff that are probably not going to be true to the site after the development. 5 acre runoff coefficients will provide more accurate calculations for runoff from site. For detention not to be a requirement increase in runoff has to be negligible. At this time it is not negligible, about 25-30% increase. Additionally, per ECM I.7.1.B.5 impervious lot coverage of 10% is allowed as an exclusion.

Please state that there are no drainage fees for this basin.

Provide a narrative for the four step process and provide a description for each of the steps. Discuss water quality and detention.

Please also state any water quality exclusions that may apply. Refer to ECM Appendix I.7.1.B.5

APPENDICES

VICINITY MAP

EXHIBIT 2

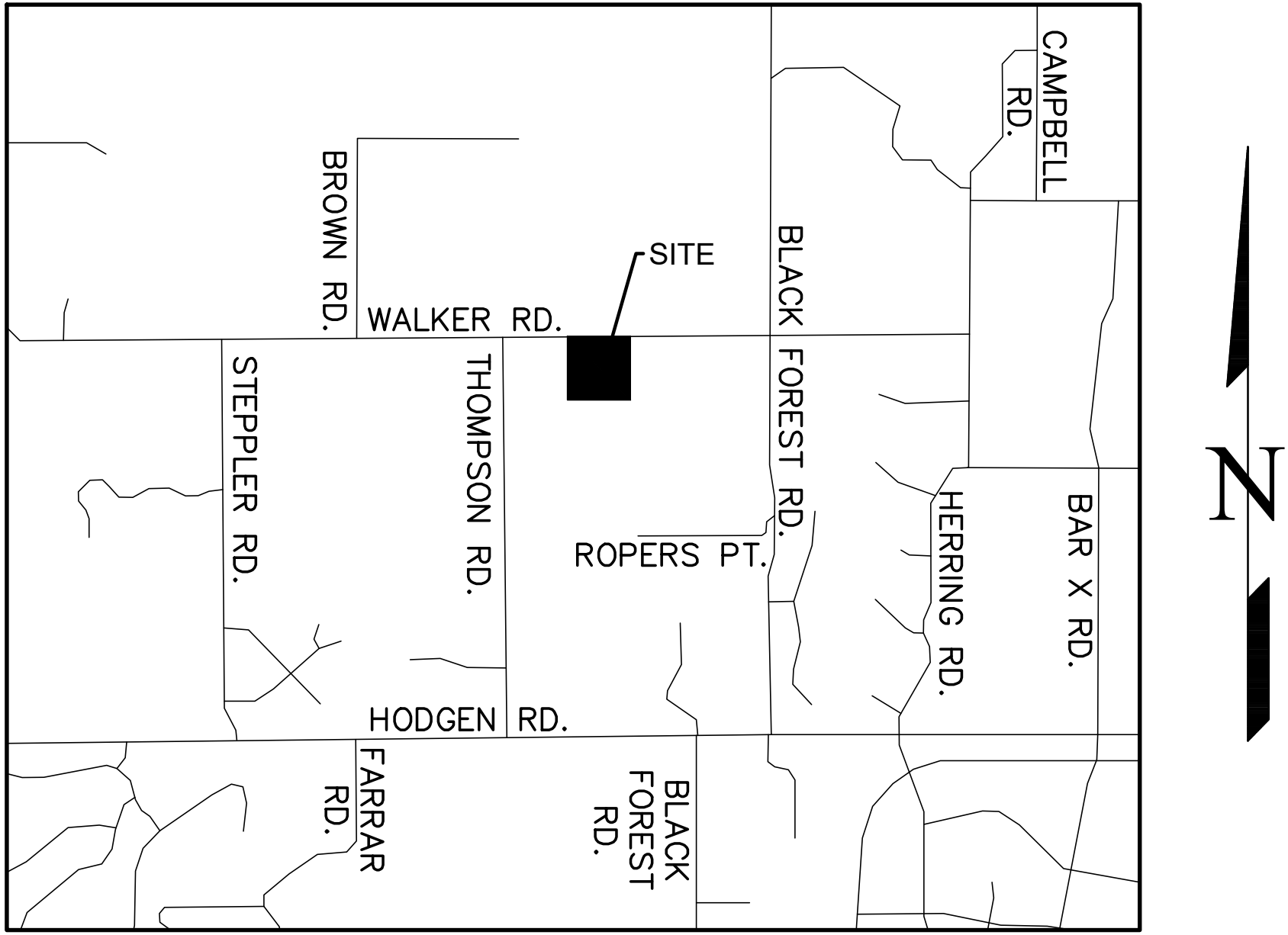
N
BAR X RD.
HERRING RD.
CAMPBELL RD.
BLACK FOREST RD.
SITE
ROPERS PT.
BROWN RD.
WALKER RD.
THOMPSON RD.
STEPPLER RD.
HODGEN RD.
BLACK FOREST RD.
FARRAR RD.

SOILS MAP

Soil Map—El Paso County Area, Colorado

Map Scale: 1:3,060 if printed on A portrait (8.5" x 11") sheet.

N

Meters: 0 45 90 180 270

Feet: 0 100 200 400 600

Map projection: Web Mercator Corner coordinates: WGS84 Edge tics: UTM Zone 13N WGS84

MAP LEGEND

Area of Interest (AOI)

Area of Interest (AOI)

Soils

Soil Map Unit Polygons

Soil Map Unit Lines

Soil Map Unit Points

Special Point Features

Blowout

Borrow Pit

Clay Spot

Closed Depression

Gravel Pit

Gravelly Spot

Landfill

Lava Flow

Marsh or swamp

Mine or Quarry

Miscellaneous Water

Perennial Water

Rock Outcrop

Saline Spot

Sandy Spot

Severely Eroded Spot

Sinkhole

Slide or Slip

Sodic Spot

Spoil Area

Stony Spot

Very Stony Spot

Wet Spot

Other

Special Line Features

Water Features

Streams and Canals

Transportation

Rails

Interstate Highways

US Routes

Major Roads

Local Roads

Background

Aerial Photography

MAP INFORMATION

The soil surveys that comprise your AOI were mapped at 1:24,000.

Warning: Soil Map may not be valid at this scale.

Enlargement of maps beyond the scale of mapping can cause misunderstanding of the detail of mapping and accuracy of soil line placement. The maps do not show the small areas of contrasting soils that could have been shown at a more detailed scale.

Please rely on the bar scale on each map sheet for map measurements.

Source of Map: Natural Resources Conservation Service
Web Soil Survey URL:
Coordinate System: Web Mercator (EPSG:3857)

Maps from the Web Soil Survey are based on the Web Mercator projection, which preserves direction and shape but distorts distance and area. A projection that preserves area, such as the Albers equal-area conic projection, should be used if more accurate calculations of distance or area are required.

This product is generated from the USDA-NRCS certified data as of the version date(s) listed below.

Soil Survey Area: El Paso County Area, Colorado
Survey Area Data: Version 18, Jun 5, 2020

Soil map units are labeled (as space allows) for map scales 1:50,000 or larger.

Date(s) aerial images were photographed: Sep 8, 2018—May 26, 2019

The orthophoto or other base map on which the soil lines were compiled and digitized probably differs from the background imagery displayed on these maps. As a result, some minor shifting of map unit boundaries may be evident.

Map Unit Legend

Map Unit Symbol	Map Unit Name	Acres in AOI	Percent of AOI
67	Peyton sandy loam, 5 to 9 percent slopes	14.7	38.0%
69	Peyton-Pring complex, 8 to 15 percent slopes	24.0	62.0%
Totals for Area of Interest		**38.6**	**100.0%**

El Paso County Area, Colorado

67—Peyton sandy loam, 5 to 9 percent slopes

Map Unit Setting

National map unit symbol: 369d
Elevation: 6,800 to 7,600 feet
Mean annual air temperature: 43 to 45 degrees F
Frost-free period: 115 to 125 days
Farmland classification: Not prime farmland

Map Unit Composition

Peyton and similar soils: 85 percent
Estimates are based on observations, descriptions, and transects of the mapunit.

Description of Peyton

Setting

Landform: Hills
Landform position (three-dimensional): Side slope
Down-slope shape: Linear
Across-slope shape: Linear
Parent material: Arkosic alluvium derived from sedimentary rock and/or arkosic residuum weathered from sedimentary rock

Typical profile

A - 0 to 12 inches: sandy loam
Bt - 12 to 25 inches: sandy clay loam
BC - 25 to 35 inches: sandy loam
C - 35 to 60 inches: sandy loam

Properties and qualities

Slope: 5 to 9 percent
Depth to restrictive feature: More than 80 inches
Drainage class: Well drained
Runoff class: Medium
Capacity of the most limiting layer to transmit water (Ksat): Moderately high (0.20 to 0.60 in/hr)
Depth to water table: More than 80 inches
Frequency of flooding: None
Frequency of ponding: None
Available water supply, 0 to 60 inches: Moderate (about 7.3 inches)

Interpretive groups

Land capability classification (irrigated): None specified
Land capability classification (nonirrigated): 4e
Hydrologic Soil Group: B
Ecological site: R049XB216CO - Sandy Divide
Hydric soil rating: No

Minor Components

Pleasant

Percent of map unit:
Landform: Depressions
Hydric soil rating: Yes

Other soils

Percent of map unit:
Hydric soil rating: No

Data Source Information

Soil Survey Area: El Paso County Area, Colorado
Survey Area Data: Version 18, Jun 5, 2020

El Paso County Area, Colorado

69—Peyton-Pring complex, 8 to 15 percent slopes

Map Unit Setting

National map unit symbol: 369g
Elevation: 6,800 to 7,600 feet
Farmland classification: Not prime farmland

Map Unit Composition

Peyton and similar soils: 40 percent
Pring and similar soils: 30 percent
Estimates are based on observations, descriptions, and transects of the mapunit.

Description of Peyton

Setting

Landform: Hills
Landform position (three-dimensional): Side slope
Down-slope shape: Linear
Across-slope shape: Linear
Parent material: Arkosic alluvium derived from sedimentary rock and/or arkosic residuum weathered from sedimentary rock

Typical profile

A - 0 to 12 inches: sandy loam
Bt - 12 to 25 inches: sandy clay loam
BC - 25 to 35 inches: sandy clay loam
C - 35 to 60 inches: sandy loam

Properties and qualities

Slope: 8 to 9 percent
Depth to restrictive feature: More than 80 inches
Drainage class: Well drained
Runoff class: Medium
Capacity of the most limiting layer to transmit water (Ksat): Moderately high (0.20 to 0.60 in/hr)
Depth to water table: More than 80 inches
Frequency of flooding: None
Frequency of ponding: None
Available water supply, 0 to 60 inches: Moderate (about 7.3 inches)

Interpretive groups

Land capability classification (irrigated): None specified
Land capability classification (nonirrigated): 4e
Hydrologic Soil Group: B
Ecological site: R049XB216CO - Sandy Divide
Hydric soil rating: No

Description of Pring

Setting

Landform: Hills
Landform position (three-dimensional): Side slope
Down-slope shape: Linear
Across-slope shape: Linear
Parent material: Arkosic alluvium derived from sedimentary rock

Typical profile

A - 0 to 14 inches: coarse sandy loam
C - 14 to 60 inches: gravelly sandy loam

Properties and qualities

Slope: 8 to 15 percent
Depth to restrictive feature: More than 80 inches
Drainage class: Well drained
Runoff class: Low
Capacity of the most limiting layer to transmit water (Ksat): High (2.00 to 6.00 in/hr)
Depth to water table: More than 80 inches
Frequency of flooding: None
Frequency of ponding: None
Available water supply, 0 to 60 inches: Low (about 6.0 inches)

Interpretive groups

Land capability classification (irrigated): None specified
Land capability classification (nonirrigated): 6e
Hydrologic Soil Group: B
Ecological site: R049XB222CO - Loamy Park
Hydric soil rating: No

Minor Components

Pleasant

Percent of map unit:
Landform: Depressions
Hydric soil rating: Yes

Other soils

Percent of map unit:
Hydric soil rating: No

Data Source Information

Soil Survey Area: El Paso County Area, Colorado
Survey Area Data: Version 18, Jun 5, 2020

FEMA FLOODPLAIN MAP

National Flood Hazard Layer FIRMette

FEMA

104°42'38"W 39°5'42"N

104°42'1"W 39°5'14"N

0 250 500 1,000 1,500 2,000 Feet

1:6,000

Basemap: USGS National Map: Orthoimagery: Data refreshed October, 2020

Legend

SEE FIS REPORT FOR DETAILED LEGEND AND INDEX MAP FOR FIRM PANEL LAYOUT

SPECIAL FLOOD HAZARD AREAS

- Without Base Flood Elevation (BFE) *Zone A, V, A99*
- With BFE or Depth *Zone AE, AO, AH, VE, AR*
- Regulatory Floodway

OTHER AREAS OF FLOOD HAZARD

- 0.2% Annual Chance Flood Hazard, Areas of 1% annual chance flood with average depth less than one foot or with drainage areas of less than one square mile *Zone X*
- Future Conditions 1% Annual Chance Flood Hazard *Zone X*
- Area with Reduced Flood Risk due to Levee. See Notes. *Zone X*
- Area with Flood Risk due to Levee *Zone D*

OTHER AREAS

- NO SCREEN Area of Minimal Flood Hazard *Zone X*
- Effective LOMRs
- Area of Undetermined Flood Hazard *Zone D*

GENERAL STRUCTURES

- Channel, Culvert, or Storm Sewer
- Levee, Dike, or Floodwall

OTHER FEATURES

- B 20.2 17.5 Cross Sections with 1% Annual Chance Water Surface Elevation
- 8 Coastal Transect
- 513 Base Flood Elevation Line (BFE)
- Limit of Study
- Jurisdiction Boundary
- Coastal Transect Baseline
- Profile Baseline
- Hydrographic Feature

MAP PANELS

- Digital Data Available
- No Digital Data Available
- Unmapped

N

The pin displayed on the map is an approximate point selected by the user and does not represent an authoritative property location.

This map complies with FEMA's standards for the use of digital flood maps if it is not void as described below. The basemap shown complies with FEMA's basemap accuracy standards

The flood hazard information is derived directly from the authoritative NFHL web services provided by FEMA. This map was exported on 1/4/2022 at 11:54 AM and does not reflect changes or amendments subsequent to this date and time. The NFHL and effective information may change or become superseded by new data over time.

This map image is void if the one or more of the following map elements do not appear: basemap imagery, flood zone labels, legend, scale bar, map creation date, community identifiers, FIRM panel number, and FIRM effective date. Map images for unmapped and unmodernized areas cannot be used for regulatory purposes.

HYDROLOGIC CALCULATIONS

6665 Walker Road Minor Subdivision
Area Runoff Coefficient (C) Summary

HSG - B

EXISTING

		GREENBELT			*GRAVEL LOT*			*PAVEMENT/ROOF*			*WEIGHTED*		*WEIGHTED CA*	
BASIN	**TOTAL AREA**	**AREA**	**C5**	**C100**	**AREA**	**C5**	**C100**	**AREA**	**C5**	**C100**	**C5**	**C100**	**CA5**	**CA100**
	(Acres)	*(Acres)*			*(Acres)*			*(Acres)*						
EX-A	8.00	7.88	0.09	0.36	0.00	0.59	0.70	0.12	0.90	0.96	0.10	0.37	0.82	2.95
EX-B	7.06	6.95	0.09	0.36	0.00	0.59	0.70	0.11	0.90	0.96	0.10	0.37	0.72	2.61
EX-C	2.19	2.19	0.09	0.36	0.00	0.59	0.70	0.00	0.90	0.96	0.09	0.36	0.20	0.79
EX-D	7.30	7.30	0.09	0.36	0.00	0.59	0.70	0.00	0.90	0.96	0.09	0.36	0.66	2.63
EX-E	4.48	4.48	0.09	0.36	0.00	0.59	0.70	0.00	0.90	0.96	0.09	0.36	0.40	1.61
EX-F	4.45	2.81	0.09	0.36	1.39	0.59	0.70	0.25	0.90	0.96	0.29	0.50	1.30	2.22
EX-G	6.71	5.81	0.09	0.36	0.26	0.59	0.70	0.64	0.90	0.96	0.19	0.43	1.25	2.89
	25.5													

DEVELOPED

		GRAVEL LOT			*PAVEMENT/ROOF*			*RESIDENTIAL (1 ACRE)*			*WEIGHTED*		*WEIGHTED CA*	
BASIN	**TOTAL AREA**	**AREA**	**C5**	**C100**	**AREA**	**C5**	**C100**	**AREA**	**C5**	**C100**	**C5**	**C100**	**CA5**	**CA100**
	(Acres)	*(Acres)*			*(Acres)*			*(Acres)*						
A	8.00	0.00	0.59	0.70	0.00	0.90	0.96	8.00	0.20	0.44	0.20	0.44	1.60	3.52
B	7.06	0.00	0.59	0.70	0.00	0.90	0.96	7.06	0.20	0.44	0.20	0.44	1.41	3.11
C	2.19	0.00	0.59	0.70	0.00	0.90	0.96	2.19	0.20	0.44	0.20	0.44	0.44	0.96
D	7.30	0.00	0.59	0.70	0.00	0.90	0.96	7.30	0.20	0.44	0.20	0.44	1.46	3.21
E	4.48	0.00	0.59	0.70	0.00	0.90	0.96	4.48	0.20	0.44	0.20	0.44	0.90	1.97
F	4.45	0.00	0.59	0.70	0.00	0.90	0.96	4.45	0.20	0.44	0.20	0.44	0.89	1.96
G	6.71	0.00	0.59	0.70	0.00	0.90	0.96	6.71	0.20	0.44	0.20	0.44	1.34	2.95

Date: 3/6/2022 Checked by:_____

6665 WALKER ROAD MINOR SUBDIVISION
Runoff Summary

EXISTING

		WEIGHTED		*OVERLAND*				*SHALLOW CONCENTRATED FLOW*				T_C	*INTENSITY*		*TOTAL FLOWS*	
BASIN	**AREA TOTAL** *(Acres)*	C_5	C_{100}	C_5	**Length** *(ft)*	**Slope** *(ft/ft)*	T_t *(min)*	**Length** *(ft)*	**Slope** *(%)*	**Velocity** *(fps)*	T_t *(min)*	**TOTAL** *(min)*	I_5 *(in/hr)*	I_{100} *(in/hr)*	Q_5 *(c.f.s.)*	Q_{100} *(c.f.s.)*
		** For Calcs See Runoff Summary*														
EX-A	8.00	0.10	0.37	0.10	300	0.048	18.6	500	5.2%	0.6	13.9	32.5	2.4	3.9	1.94	11.40
EX-B	7.06	0.10	0.37	0.10	300	0.038	20.1	510	4.8%	1.1	7.8	27.8	2.6	4.2	1.87	11.04
EX-C	2.19	0.09	0.36	0.09	300	0.048	18.8	0	3.5%	0.9	0.0	18.8	3.1	5.3	0.62	4.14
EX-D	7.30	0.09	0.36	0.09	170	0.026	17.3	710	5.1%	1.1	10.5	27.8	2.6	4.2	1.70	11.12
EX-E	4.48	0.09	0.36	0.09	300	0.032	21.5	490	5.8%	1.2	6.8	28.3	2.6	4.2	1.03	6.76
EX-F	4.45	0.29	0.50	0.29	300	0.027	18.2	335	4.0%	1.0	5.6	23.8	2.8	4.6	3.63	10.30
EX-G	6.71	0.19	0.43	0.19	300	0.023	21.7	460	4.6%	1.1	7.1	28.8	2.5	4.1	3.17	11.97

DEVELOPED

		WEIGHTED		*OVERLAND*				*SHALLOW CONCENTRATED FLOW*				T_C	*INTENSITY*		*TOTAL FLOWS*	
BASIN	**AREA TOTAL** *(Acres)*	C_5	C_{100}	C_5	**Length** *(ft)*	**Slope** *(ft/ft)*	T_t *(min)*	**Length** *(ft)*	**Slope** *(%)*	**Velocity** *(fps)*	T_t *(min)*	**TOTAL** *(min)*	I_5 *(in/hr)*	I_{100} *(in/hr)*	Q_5 *(c.f.s.)*	Q_{100} *(c.f.s.)*
		** For Calcs See Runoff Summary*														
A	8.00	0.20	0.44	0.20	300	0.048	16.8	500	5.2%	0.6	13.9	30.7	2.5	4.0	3.92	14.07
B	7.06	0.20	0.44	0.20	300	0.038	18.1	510	4.8%	1.1	7.8	25.9	2.7	4.4	3.79	13.71
C	2.19	0.20	0.44	0.20	300	0.048	16.8	0	3.5%	0.9	0.0	16.8	3.3	5.6	1.45	5.37
D	7.30	0.20	0.44	0.20	170	0.026	15.5	710	5.1%	1.1	10.5	25.9	2.7	4.4	3.91	14.16
E	4.48	0.20	0.44	0.20	300	0.032	19.2	490	5.8%	1.2	6.8	26.0	2.7	4.4	2.40	8.69
F	4.45	0.20	0.44	0.20	300	0.027	20.3	335	4.0%	1.0	5.6	25.9	2.7	4.4	2.39	8.65
G	6.71	0.20	0.44	0.20	300	0.023	21.4	460	4.6%	1.1	7.1	28.5	2.5	4.2	3.42	12.32

6665 WALKER ROAD MINOR SUBDIVISION
Surface Routing

EXISTING CONDITIONS				
			Flow	
Design Point(s)	Contributing Basins	Area (Acres)	Q_5	Q_{100}
X1	EX-A	8.00	1.94	11.40
X2	EX-B, EX-G	13.77	5.04	23.01
X3	EX-C	2.19	0.62	4.14
X4	EX-D	7.30	1.70	11.12
X5	EX-E	4.48	1.03	6.76
X6	EX-F	4.45	3.63	10.30
X7	EX-G	6.71	3.17	11.97

PROPOSED CONDITIONS				
			Flow	
Design Point(s)	Contributing Basins	Area (Acres)	Q_5	Q_{100}
1	A	8.00	3.92	14.07
2	B, G	13.77	7.21	26.03
3	C	2.19	1.45	5.37
4	D	7.30	3.91	14.16
5	E	4.48	2.40	8.69
6	F	4.45	2.39	8.65
7	G	6.71	3.42	12.32

HYDRAULIC CALCULATIONS

MANNING'S EQUATION for OPEN CHANNEL FLOW

Project:	**High View Estates**	Location:	Existing Swale A-A
By:	John F	Date:	5/23/2022
Chk By:		Date:	

version 12-2004

Mannings Formula

$Q = (1.486/n)AR_h^{2/3}S^{1/2}$

R = A/P

A = cross sectional area

P= wetted perimeter

S = slope of channel

n = Manning's roughness coefficient

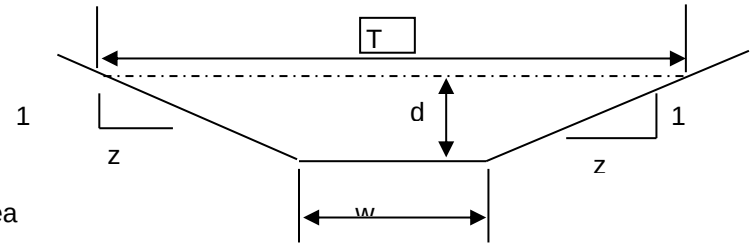

$V = (1.49/n)R_h^{2/3}S^{1/2}$

Q = V x A

	INPUT
z (sideslope)=	5
z (sideslope)=	3
b (btm width, ft)=	0
d (depth, ft)=	2
S (slope, ft/ft)	0.007
n_{low} =	0.035
n_{high} =	0.035

Clear Data Entry Cells

Depth, ft	Area, sf	Wetted Perimeter, ft	Hydraulic Radius, ft	Low N Velocity, fps	Low N Flow, cfs	High N Velocity, fps	High N Flow, cfs		
2	16.00	16.52	0.97	3.47691293	55.6306	3.476913	55.6306	T =	16
								Dm =	1.000
				Sc low =	0.0186	Sc high =	0.0186		
				.7 Sc	1.3 Sc	.7 Sc	1.3 Sc		
				0.0130	0.0242	0.0130	0.0242		

s_c = critical slope ft / ft

T = top width of the stream

d_m = a/T = mean depth of flow

Created by: Mike O'Shea

CIRCULAR CONDUIT FLOW (Normal & Critical Depth Computation)

Project: **Blue cells are for user data entry**
Pipe ID: **Green cells are calculated values**

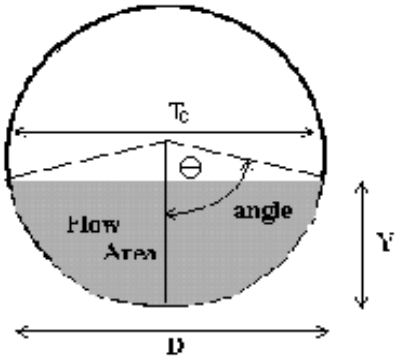

Design Information (Input)			
Pipe Invert Slope	So =	0.0050	ft/ft
Pipe Manning's n-value	n =	0.0130	
Pipe Diameter	D =	36.00	inches
Design discharge	**Q =**	**26.03**	**cfs**
Full-flow Capacity (Calculated)			
Full-flow area	Af =	7.07	sq ft
Full-flow wetted perimeter	Pf =	9.42	ft
Half Central Angle	Theta =	3.14	radians
Full-flow capacity	Qf =	47.29	cfs
Calculation of Normal Flow Condition			
Half Central Angle (0<Theta<3.14)	Theta =	1.63	radians
Flow area	An =	3.80	sq ft
Top width	Tn =	2.99	ft
Wetted perimeter	Pn =	4.89	ft
Flow depth	Yn =	1.59	ft
Flow velocity	Vn =	6.85	fps
Discharge	Qn =	26.03	cfs
Percent Full Flow	Flow =	55.0%	of full flow
Normal Depth Froude Number	Fr_n =	1.07	supercritical
Calculation of Critical Flow Condition			
Half Central Angle (0<Theta-c<3.14)	Theta-c =	1.67	radians
Critical flow area	Ac =	3.98	sq ft
Critical top width	Tc =	2.99	ft
Critical flow depth	Yc =	1.65	ft
Critical flow velocity	Vc =	6.55	fps
Critical Depth Froude Number	Fr_c =	1.00	

Determination of Culvert Headwater and Outlet Protection

Project: Blue cells are for user data entry
Basin ID: Green cells are calculated values

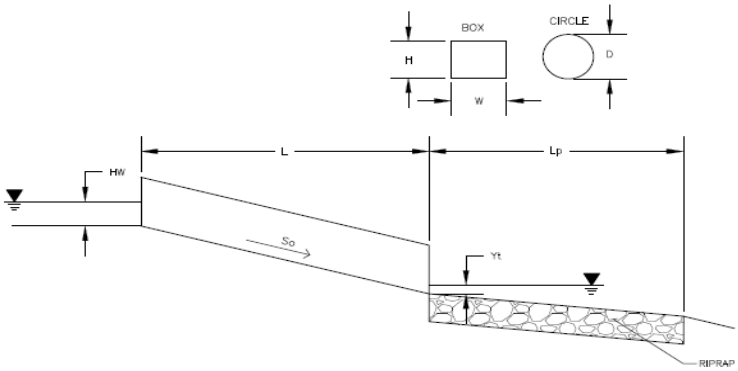

Soil Type:
Choose One:
- ○ Sandy
- ◉ Non-Sandy

Supercritical Flow! Using Da to calculate protection type.

Design Information (Input):

	Design Discharge	Q =	26.03	cfs
Circular Culvert:				
	Barrel Diameter in Inches	D =	36	inches
	Inlet Edge Type (Choose from pull-down list)	Grooved End Projection		
Box Culvert:		**OR**		
	Barrel Height (Rise) in Feet	Height (Rise) =		ft
	Barrel Width (Span) in Feet	Width (Span) =		ft
	Inlet Edge Type (Choose from pull-down list)			
	Number of Barrels	No =	1	
	Inlet Elevation	Elev IN =	7491.05	ft
	Outlet Elevation **OR** Slope	Elev OUT =	7490.85	ft
	Culvert Length	L =	40	ft
	Manning's Roughness	n =	0.013	
	Bend Loss Coefficient	k_b =	0	
	Exit Loss Coefficient	k_x =	1	
	Tailwater Surface Elevation	Elev Y_t =		ft
	Max Allowable Channel Velocity	V =	7	ft/s

Required Protection (Output):

Tailwater Surface Height	Y_t =	1.20	ft
Flow Area at Max Channel Velocity	A_t =	3.72	ft^2
Culvert Cross Sectional Area Available	A =	7.07	ft^2
Entrance Loss Coefficient	k_e =	0.20	
Friction Loss Coefficient	k_f =	0.29	
Sum of All Losses Coefficients	k_s =	1.49	ft
Culvert Normal Depth	Y_n =	1.59	ft
Culvert Critical Depth	Y_c =	1.65	ft
Tailwater Depth for Design	d =	2.32	ft
Adjusted Diameter **OR** Adjusted Rise	D_a =	2.29	ft
Expansion Factor	1/(2*tan(Θ)) =	6.70	
Flow/Diameter$^{2.5}$ **OR** Flow/(Span * Rise$^{1.5}$)	Q/D^2.5 =	1.67	$ft^{0.5}$/s
Froude Number	Fr =	1.07	**Supercritical!**
Tailwater/Adjusted Diameter **OR** Tailwater/Adjusted Rise	Yt/D =	0.52	
Inlet Control Headwater	HW_I =	2.37	ft
Outlet Control Headwater	HW_O =	2.44	
Design Headwater Elevation	**HW =**	**7,493.49**	**ft**
Headwater/Diameter OR Headwater/Rise Ratio	**HW/D =**	**0.81**	
Minimum Theoretical Riprap Size	d_{50} =	4	in
Nominal Riprap Size	d_{50} =	6	in
UDFCD Riprap Type	**Type =**	**VL**	
Length of Protection	**L_p =**	**9**	**ft**
Width of Protection	**T =**	**5**	**ft**

DRAINAGE MAPS

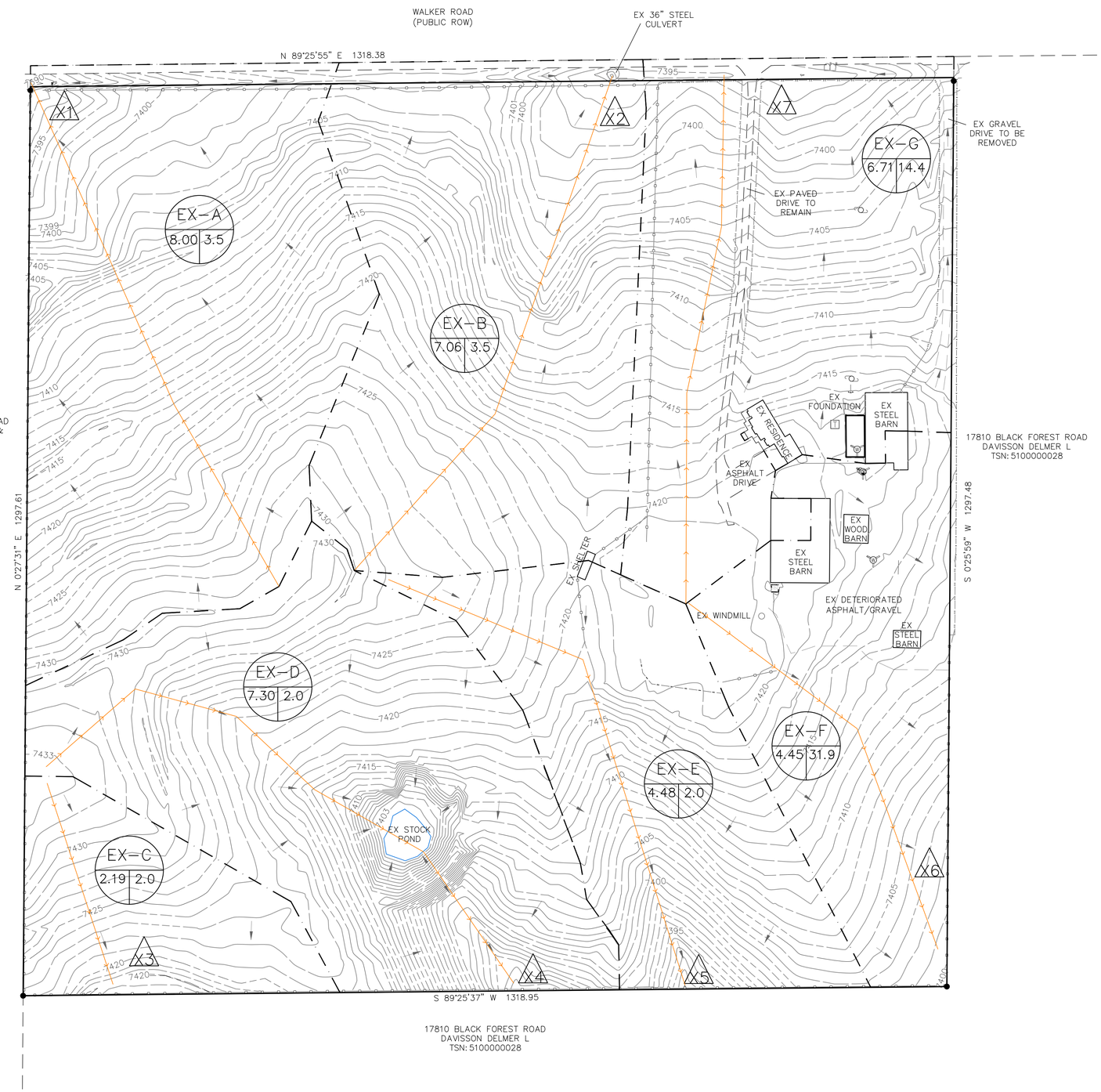

BENCHMARK

AN ALUMINUM CAP ON A 3/4" X 30" REBAR
35.00 FEET FROM TRUE CORNER LOCATION.
ELEV = 7386.46 (NAVD88)

LEGEND

- EXISTING FLOW
- UTILITY POLE
- GUY WIRE
- TELECOMMS PEDESTAL
- WATER WELL HEAD
- YARD HYDRANT
- SANITARY MANHOLE (CONCRETE)
- STORM CULVERT
- SPLIT RAIL FENCE
- WIRE FENCE
- STEEL FENCE
- EXISTING CONTOURS – MINOR
- EXISTING CONTOUR – MAJOR (6135)
- EXISTING EASEMENT
- EXISTING PAVEMENT EDGE
- PROPOSED PROPERTY LINE

LEGEND

- BASIN DESIGNATION (B)
- AREA IN BASIN (AC) (1.12)
- % IMPERVIOUSNESS (7.7)
- DESIGN POINT (X1)
- BASIN BOUNDARY
- TIME OF CONCENTRATION PATH

N

80' 0 80' 160'

SCALE: 1"=80'

DRAINAGE SUMMARY

BASIN NAME	AREA (ACRES)	FLOW 5 YR (cfs)	FLOW 100 YR (cfs)
EX–A	8.00	1.94	11.40
EX–B	7.06	1.87	11.04
EX–C	2.19	0.62	4.14
EX–D	7.30	1.70	11.12
EX–E	4.48	1.03	6.76
EX–F	4.45	3.63	10.30
EX–G	6.71	3.17	11.97

DESIGN POINT SUMMARY

DP	CONTRIBUTING BASINS	AREA AC.	Q5 CFS	Q100 CFS
X1	EX–A	8.00	1.94	11.40
X2	EX–B, EX–G	13.77	5.04	23.01
X3	EX–C	2.19	0.62	4.14
X4	EX–D	7.30	1.70	11.12
X5	EX–E	4.48	1.03	6.76
X6	EX–F	4.45	3.63	10.30
X7	EX–G	6.71	3.17	11.97

REVISIONS

NO.	DESCRIPTION	DATE

UNTIL SUCH TIME AS THESE DRAWINGS ARE APPROVED BY THE APPROPRIATE REVIEWING AGENCIES, TERRA NOVA ENGINEERING, INC. APPROVES THEIR USE ONLY FOR THE PURPOSES DESIGNATED BY WRITTEN AUTHORIZATION.

PREPARED FOR:
COLLIN BRONES
ATTN:
954 PINENUT COURT
COLORADO SPRINGS, CO 80921
(719) 660–2601

Terra Nova Engineering, Inc.
Creative Civil Engineering Solutions
721 S. 23RD STREET
COLORADO SPRINGS, CO 80904
OFFICE: 719–635–6422
FAX: 719–635–6426
www.tnesinc.com

HIGH VIEW ESTATES
6665 WALKER ROAD

EXISTING DRAINAGE PLAN

DESIGNED BY JF
DRAWN BY JF
CHECKED BY LD
H–SCALE AS SHOWN
V–SCALE N/A
JOB NO. 2160.00
DATE ISSUED 5/12/22
SHEET NO. 1 OF 2

N:\jobs\2160.00\Drawings\2160.00 DRAINAGE.dwg, 5/24/2022 9:01:11 AM, DWG To PDF.pc3

Per the open channel flow calculation it appears 2 feet is the runoff depth. Per ECM 3.3.4.B.2 0.5' of freeboard is required. Revise to include that extra depth.

Per swale calculation it appears the top of the stream is 16' so this swale is undersized. Revise to allow for that width.

Coordinate with State Engineer's office in regards to water rights issues. Please submit any correspondence.