GRADING AND EROSION CONTROL PLAN

JUDGE ORR ROAD RV PARK AND STORAGE

EL PASO COUNTY, COLORADO

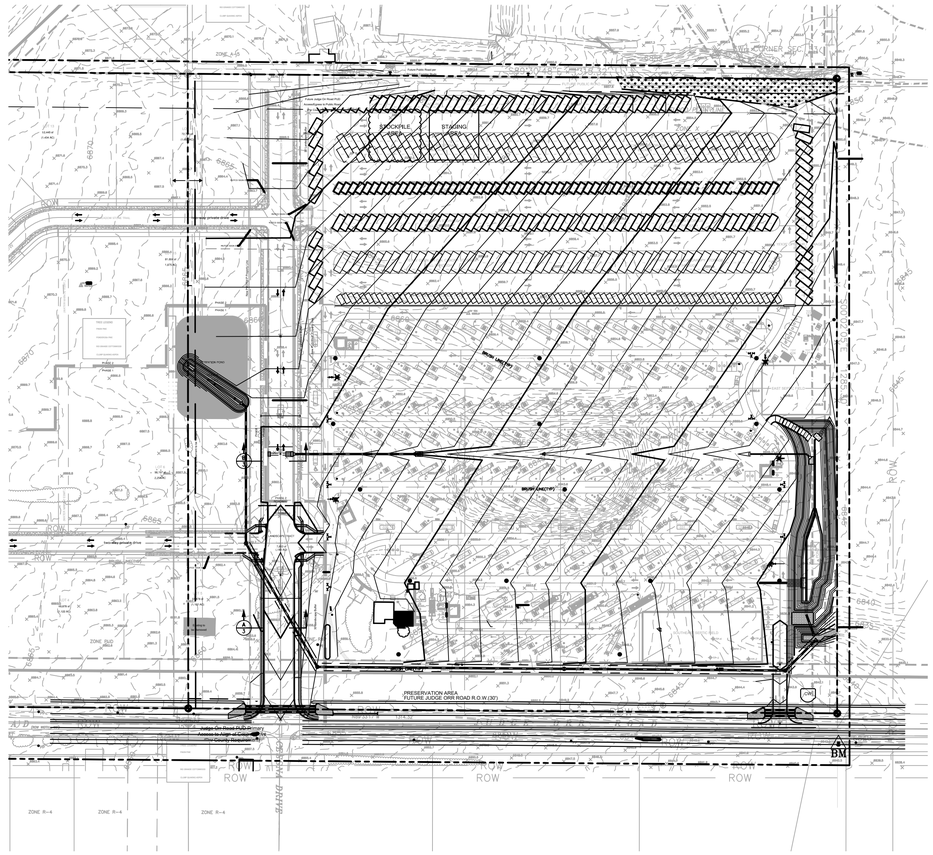

SITE MAP

BENCHMARK

CONTROL POINT SET ON FENCE LINE, SOUTH SIDE OF JUDGE ORR ROAD FT DUE SOUTH OF EAST PROPERTY LINE. ELEV = 6841.90 (HV100)

BASIS OF BEARING

WEST LINE SW ¼ OF THE SW ¼ SECTION 33 N00°04' 00"W

VICINITY MAP:

OWNER'S STATEMENT:

THE OWNER WILL COMPLY WITH THE REQUIREMENTS OF THE GRADING AND EROSION CONTROL PLAN.

PRAIRIE STONE, LLC — DATE
ANDREA MINNICH, MANAGER

ENGINEER'S STATEMENT:
These detailed plans were prepared under my direction and supervision. Said plans and specifications have been prepared in according to the criteria established by the County for detailed roadway, drainage, grading and erosion control plans and specifications, and said plan sand specifications are in conformity with applicable master drainage plans and master transportation plans. Said plans and specifications meet the purposes for which the particular roadway and drainage facilities are designed and are correct to the best of my knowledge and belief. I accept responsibility for any liability caused by any negligent acts, errors or omissions on my part in preparing these detailed plans and specifications.

Michael A. Bartusek, P.E. #23329

DEVELOPER'S STATEMENT:
I, the Developer, have read and will comply with all of the requirements specified on this plan.

By: ANDREA MINNICH
Title: MANAGER
Address: PRAIRIE STONE, LLC
9476 DAKOTA DUNES LANE
PEYTON, CO 8031-4138

Filed in accordance with the El Paso County Land Development Code, Drainage Criteria Manual Volumes 1 and 2, and the Engineering Criteria Manual, as amended.

Andrea Minnich, Manager — Date

ENGINEER'S STATEMENT:

THIS GRADING AND EROSION CONTROL PLAN WAS PREPARED UNDER MY DIRECTION AND SUPERVISION AND IS CORRECT TO THE BEST OF MY KNOWLEDGE AND BELIEF. SAID PLAN HAS BEEN PREPARED ACCORDING TO THE CRITERIA ESTABLISHED BY THE COUNTY FOR GRADING AND EROSION CONTROL PLANS. I ACCEPT RESPONSIBILITY FOR ANY LIABILITY CAUSED BY ANY NEGLIGENT ACTS, ERRORS OR OMISSIONS ON MY PART IN PREPARING THIS PLAN.

MICHAEL BARTUSEK, COLORADO P.E. # 23329 — Date
ASSOCIATED DESIGN PROFESSIONALS, INC.

EL PASO COUNTY:

COUNTY PLAN REVIEW IS PROVIDED ONLY FOR GENERAL CONFORMANCE WITH COUNTY DESIGN CRITERIA. THE COUNTY IS NOT RESPONSIBLE FOR THE ACCURACY AND ADEQUACY OF THE DESIGN, DIMENSIONS, AND/ OR ELEVATIONS WHICH SHALL BE CONFIRMED AT THE JOB SITE. THE COUNTY THROUGH THE APPROVAL OF THIS DOCUMENT ASSUMES NO RESPONSIBILITY FOR COMPLETENESS AND/ OR ACCURACY OF THIS DOCUMENT.

FILED IN ACCORDANCE WITH THE REQUIREMENTS OF THE EL PASO COUNTY LAND DEVELOPMENT CODE, DRAINAGE CRITERIA MANUAL, VOLUMES 1 AND 2, AND ENGINEERING CRITERIA MANUAL AS AMENDED.

IN ACCORDANCE WITH ECM SECTION 1.12, THESE CONSTRUCTION DOCUMENTS WILL BE VALID FOR CONSTRUCTION FOR A PERIOD OF 2 YEARS FROM THE DATE SIGNED BY EL PASO COUNTY ENGINEER. IF CONSTRUCTION HAS NOT STARTED WITHIN THOSE 2 YEARS, THE PLANS WILL NEED TO BE RESUBMITTED FOR APPROVAL, INCLUDING PAYMENT OF REVIEW FEES AT THE PLANNING AND COMMUNITY DEVELOPMENT DIRECTORS DISCRETION.

JENIFER IRVINE P.E. — DATE
COUNTY ENGINEER/ECM ADMINISTRATOR

LEGEND:

- PROPOSED MAJOR CONTOUR
- PROPOSED MINOR CONTOUR
- EXISTING MAJOR CONTOUR
- EXISTING MINOR CONTOUR
- U/G PIPE (MATERIAL AND SIZE AS NOTED)
- SF — SF — SILT FENCE
- LIMITS OF CONSTRUCTION
- CW — CONCRETE WASHOUT
- VTC — VEHICLE TRACKING CONTROL
- SBB — STRAW BALE BARRIER
- IP — INLET PROTECTION
- TRAFFIC FLOW ARROWS

DRAWING INDEX

ABBR.	NAME	SHEET #S
DPC	GRADING AND EROSION CONTROL COVER	1 OF 7
DPC	DRAINAGE, GRADING & EROSION CONTROL PLAN	2 OF 7
DPC	DRAINAGE, GRADING & EROSION CONTROL DETAIL	3 OF 7
DPC	DRAINAGE, GRADING & EROSION CONTROL DETAIL	4 OF 7
DPC	EROSION CONTROL DETAILS	5 OF 7
DPC	STANDARD NOTES	6 OF 7
DPC	STORM SEWER PROFILES	7 OF 7

PCD PROJECT NO. PPR-16-040

DESIGNED BY MAB | PROJECT ENGINEER MAB | PROJECT MANAGER MAB | SCALE HORZ. 1" = 60' VERT. N/A
DATE: 02/05/19 | JOB NO. 160301 | CAD FILE NO. 160301-Base | DRAWN BY HJG

PREPARED BY:

3520 Austin Bluffs Parkway
Suite 102
Colorado Springs, CO 80918
(719) 266-5212
fax: (719) 266-5341

NO.	DATE	REVISION	BY

JUDGE ORR ROAD RV PARK & STORAGE
COLORADO SPRINGS, COLORADO
DRAINAGE, GRADING & EROSION CONTROL COVER

SHEET 1 of 7

M:\LAND PROJECTS\2016\160301-Judge Orr Road RV Park\DWG\160301-Base.dwg jim.Gill Thu, 05/02/19 6:31 PM

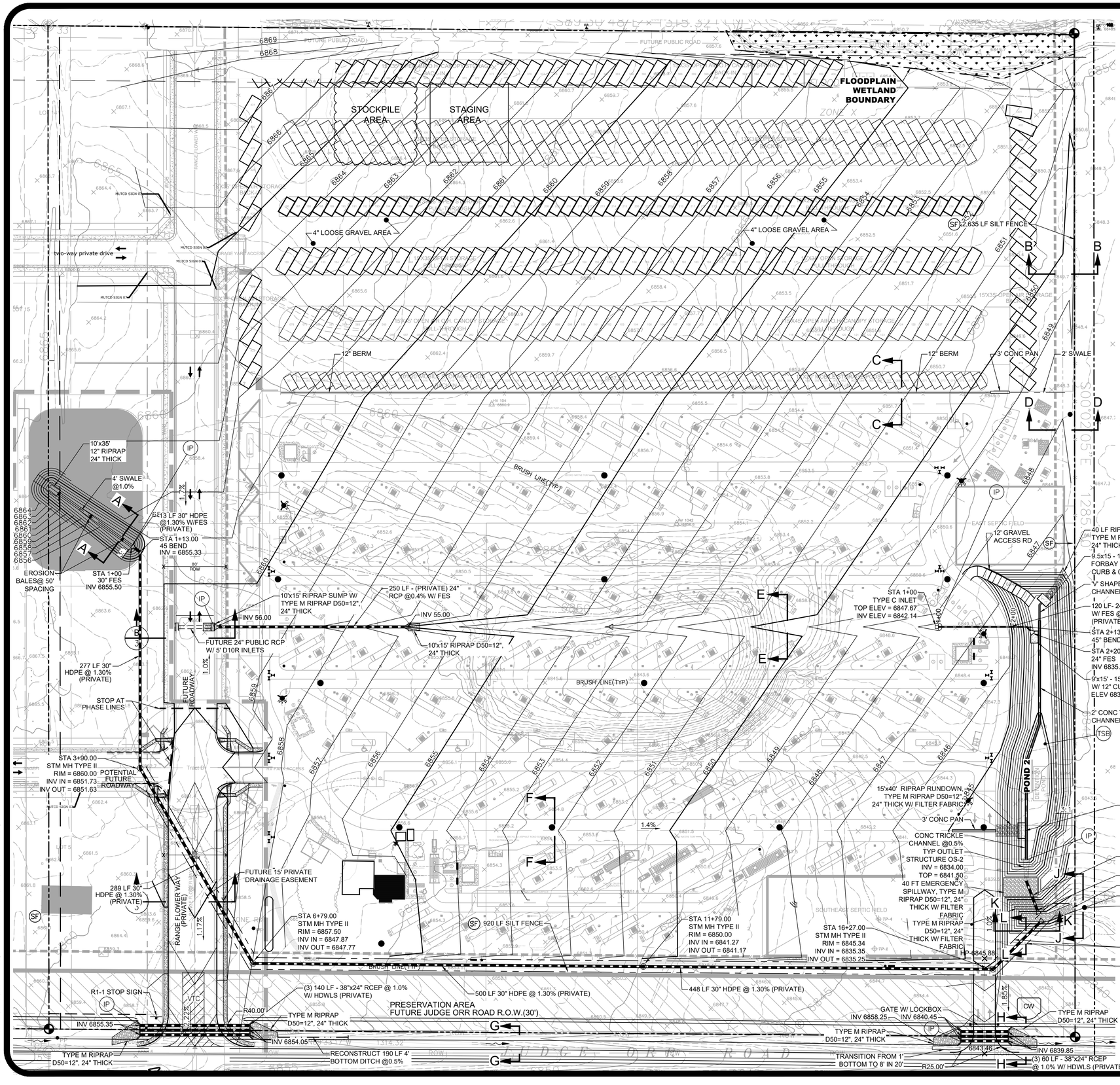

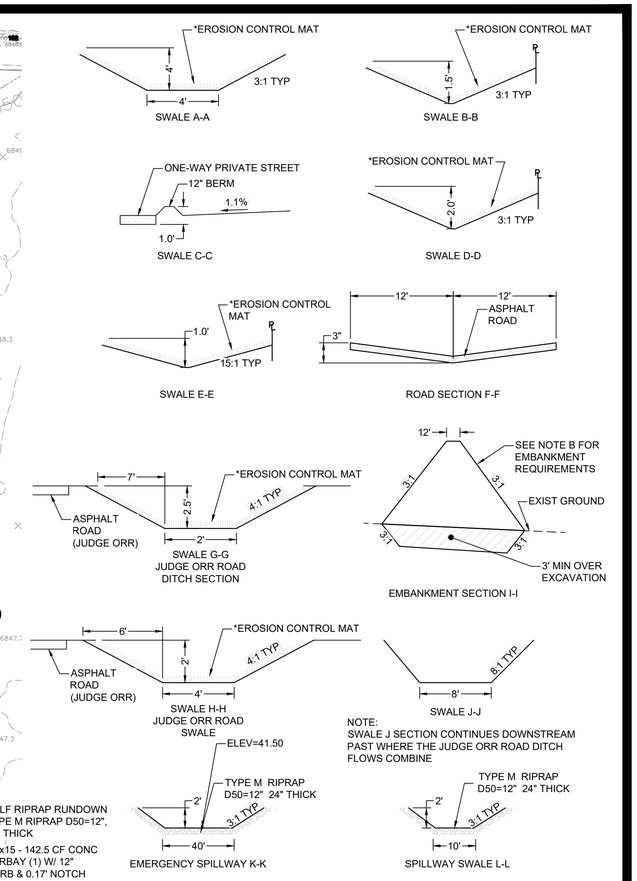

* EROSION CONTROL BLANKET SHALL BE 70% STRAW, 30% COCONUT BY WINTERS EXCELSIOR COMPANY OR EQUIVALENT

NOTES:

A. DETENTION POND AREA TO BE UTILIZED AS A SEDIMENTATION BASIN UNTIL EARTH MOVING IS COMPLETED AND THE GROUND STABILIZED AT WHICH TIME IT WILL BE CLEANED OUT, THE SEDIMENT BASIN OUTLET PIPE REMOVED AND THE DETENTION POND STRUCTURE OS2 ADDED. SEE SEDIMENT BASIN DETAIL SB ON SHEET 5 OF 7.

B. EMBANKMENT COMPACTION SHALL FOLLOW THE REQUIREMENTS OF THE GEOTECHNICAL LETTER FROM ENTECH ENGINEERING, INC. LOCATED IN APPENDIX C OF THE DRAINAGE REPORT.

LEGEND:

- PROPOSED MAJOR CONTOUR
- PROPOSED MINOR CONTOUR
- EXISTING MAJOR CONTOUR
- EXISTING MINOR CONTOUR
- U/G PIPE (MATERIAL AND SIZE AS NOTED)
- SF — SILT FENCE
- LIMITS OF CONSTRUCTION
- CW — CONCRETE WASHOUT
- VTC — VEHICLE TRACKING CONTROL
- SBB — STRAW BALE BARRIER
- INLET PROTECTION
- TSB — TEMPORARY SEDIMENT BASIN
- TRAFFIC FLOW ARROWS

NOTE:
JUDGE ORR ROAD DITCH FLOWS COMBINE WITH OUTLET SWALE FLOWS APPROX 300' EAST OF THE PROPERTY

PCD PROJECT NO. PPR-16-040

DESIGNED BY MAB | PROJECT ENGINEER MAB | PROJECT MANAGER MAB | SCALE HORIZ. 1" = 60' VERT. N/A
DATE: 02/05/19 | JOB NO. 160301 | CAD FILE NO. 160301-Base | DRAWN BY HJO

PREPARED BY:

3520 Austin Bluffs Parkway
Suite 102
Colorado Springs, CO 80918
(719) 266-5212
fax: (719) 266-5341

NO.	DATE	REVISION	BY

JUDGE ORR ROAD RV PARK & STORAGE

COLORADO SPRINGS, COLORADO

DRAINAGE, GRADING & EROSION CONTROL PLAN

M:\LAND PROJECTS\2016\160301-Judge Orr Road RV Park\DWG\160301-Base.dwg Jim.Gill Thu, 05/02/19 6:24 PM

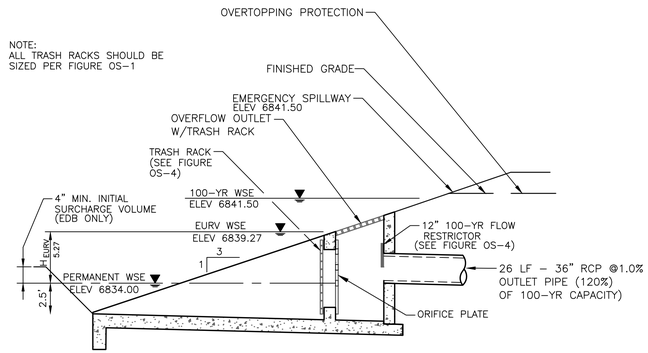

FIGURE 0S-2 TYPICAL OUTLET STRUCTURE FOR FULL SPECTRUM DETENTION

OUTLET STRUCTURE DETAIL

NOT TO SCALE

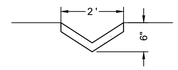

'V' SHAPED CONCRETE TRICKLE CHANNEL

NOT TO SCALE

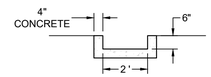

CONCRETE TRICKLE CHANNEL

NOT TO SCALE

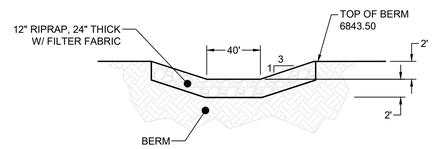

EMERGENCY SPILLWAY DETAIL

NOT TO SCALE

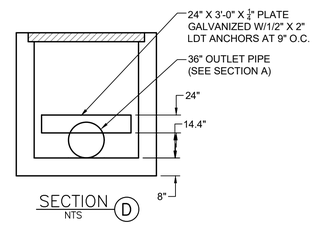

SECTION D
NTS

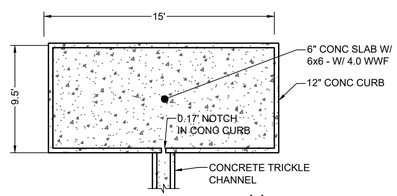

CONCRETE FOREBAY DETAIL (1)

NOT TO SCALE

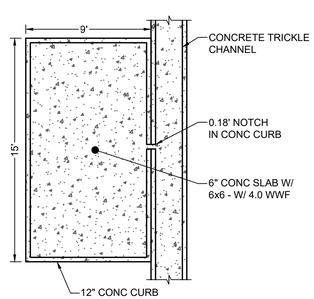

CONCRETE FOREBAY DETAIL (2)

NOT TO SCALE

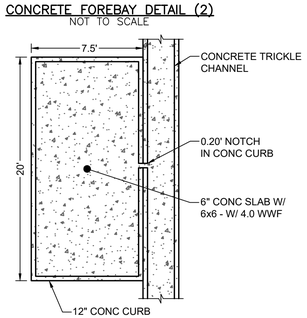

CONCRETE FOREBAY DETAIL (3)

NOT TO SCALE

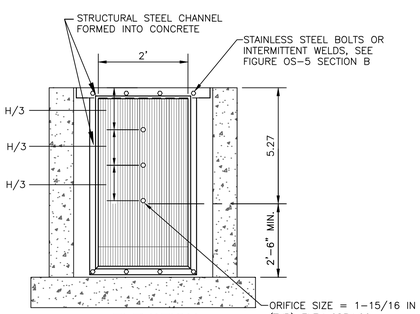

ELEVATION

ORIFICE PLATE NOTES:

1. PROVIDE CONTINUOUS NEOPRENE GASKET MATERIAL BETWEEN THE ORIFICE PLATE AND CONCRETE.
2. BOLT PLATE TO CONCRETE 12" MAX. ON CENTER. SEE TABLE OS-2 FOR PLATE THICKNESS.

EURV AND WQCV TRASH RACKS:

1. WELL-SCREEN TRASH RACKS SHALL BE STAINLESS STEEL AND SHALL BE ATTACHED BY INTERMITTENT WELDS ALONG THE EDGE OF THE MOUNTING FRAME.
2. BAR GATE TRASH RACKS SHALL BE ALUMINUM AND SHALL BE BOLTED USING STAINLESS STEEL HARDWARE.
3. TRASH RACK OPEN AREAS ARE FOR SPECIFIED TRASH RACK MATERIALS. TOTAL TRASH RACK SIZE MAY NEED TO BE ADJUSTED FOR MATERIALS HAVING DIFFERENT OPEN AREA/GROSS AREA RATIO R VALUE).
4. STRUCTURAL DESIGN OF TRASH RACKS SHALL BE BASED ON FULL HYDROSTATIC HEAD WITH ZERO HEAD DOWNSTREAM OF THE RACK.

OVERFLOW SAFETY GRATES:

1. ALL SAFETY GRATES SHALL BE MOUNTED USING STAINLESS STEEL HARDWARE AND PROVIDED WITH HINGED AND LOCKABLE OR BOLTABLE ACCESS PANELS.
2. SAFETY GRATES SHALL BE STAINLESS STEEL, ALUMINUM, OR STEEL. STEEL GRATES SHALL BE HOT DIP GALVANIZED AND MAY BE HOT POWDER COATED AFTER GALVANIZING.
3. SAFETY GRATES SHALL BE DESIGNED SUCH THAT THE DIAGONAL DIMENSION OF EACH OPENING IS SMALLER THAN THE DIAMETER OF THE OUTLET PIPE.
4. STRUCTURAL DESIGN OF SAFETY GRATES SHALL BE BASED ON FULL HYDROSTATIC HEAD WITH ZERO HEAD DOWNSTREAM OF THE RACK.

FIGURE OS-4 ORIFICE PLATE AND TRASH RACK DETAILS AND NOTES

NTS

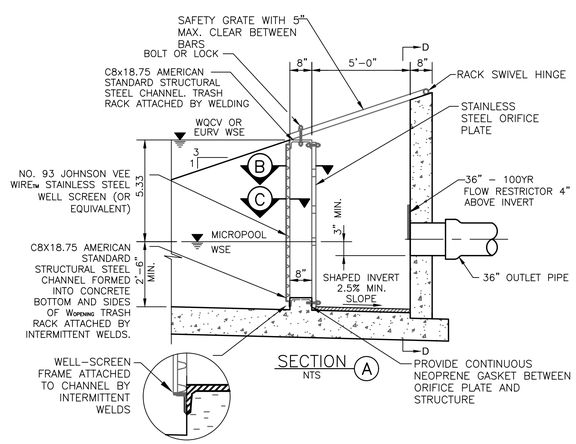

SECTION A
NTS

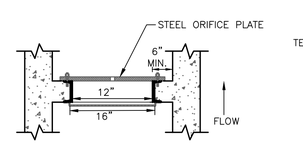

SECTION B
NTS

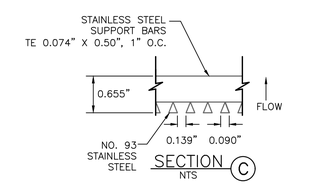

SECTION C
NTS

R VALUE = (NET OPEN AREA)/(GROSS RACK AREA) = 0.60

FIGURE OS-5 TYPICAL OUTLET STRUCTURE WITH WELL SCREEN TRASH RACK

811 Know what's below. Call before you dig.

1. ALL CONSTRUCTION AND MATERIALS SHALL BE IN ACCORDANCE WITH THE EL PASO COUNTY ENGINEERING SPECIFICATIONS.
2. THE CONTRACTOR SHALL NOTIFY COLORADO STATE UTILITIES CENTRAL LOCATING (1-800-922-1987 AT LEAST 48 HOURS PRIOR TO ANY EXCAVATION SO THAT THEY MAY LOCATE THEIR FACILITIES. THE LOCATION OF FACILITIES SHOWN ON THE DRAWINGS IS FROM AVAILABLE RECORDS AND IS APPROXIMATE.
3. ALL EXISTING UTILITY LOCATIONS SHOWN ON THE DRAWINGS REFLECT THE AVAILABLE INFORMATION AND DO NOT NECESSARILY INDICATE THE ACTUAL LOCATIONS. PRIOR TO ANY CONSTRUCTION THE CONTRACTOR SHALL VERIFY THE HORIZONTAL AND VERTICAL LOCATIONS OF ALL UTILITIES THAT MAY CONFLICT WITH OR OBSTRUCT THE NEW CONSTRUCTION. ANY REQUIRED RELOCATIONS THAT ARE NOT SPECIFICALLY SHOWN ON THE DRAWINGS SHALL BE COORDINATED WITH AND HAVE PRIOR APPROVAL OF EL PASO COUNTY UTILITIES.
4. ALL DIMENSIONS ARE TO FACE OF CURB, EDGE OF ASPHALT & FLOWLINE OF PAN.
5. ALL ELEVATIONS ARE TO TOP/ASPHALT & FLOWLINE/CURB UNLESS OTHERWISE NOTED.

ALL STORM SEWER PIPE AND SANITARY SEWER PIPE LENGTHS AND SLOPES ARE SHOWN FROM CENTER OF STRUCTURE TO CENTER OF STRUCTURE

STANDARD NOTES FOR EL PASO COUNTY GRADING AND EROSION CONTROL PLANS

1. CONSTRUCTION MAY NOT COMMENCE UNTIL A CONSTRUCTION PERMIT IS OBTAINED FROM DEVELOPMENT SERVICES AND A PRE-CONSTRUCTION CONFERENCE IS HELD WITH PLANNING AND COMMUNITY DEVELOPMENT
2. STORM-WATER DISCHARGES FROM CONSTRUCTION SITES SHALL NOT CAUSE OR THREATEN TO CAUSE POLLUTION, CONTAMINATION, OR DEGRADATION OF STATE WATERS. ALL WORK AND EARTH DISTURBANCE SHALL BE DONE IN A MANNER THAT MINIMIZES POLLUTION OF ANY ON-SITE OR OFF SITE WATERS, INCLUDING WETLANDS.
3. NOTWITHSTANDING ANYTHING DEPICTED IN THESE PLANS IN WORDS OR GRAPHIC REPRESENTATION, ALL DESIGN AND CONSTRUCTION RELATED TO ROADS, STORM DRAINAGE AND EROSION CONTROL SHALL CONFORM TO THE STANDARDS AND REQUIREMENTS OF THE MOST RECENT VERSION OF THE RELEVANT ADOPTED EL PASO COUNTY STANDARDS, INCLUDING THE LAND DEVELOPMENT CODE, THE ENGINEERING CRITERIA MANUAL, THE DRAINAGE CRITERIA MANUAL, AND THE DRAINAGE CRITERIA MANUAL VOLUME 2. ANY DEVIATIONS TO REGULATIONS AND STANDARDS MUST BE REQUESTED, AND APPROVED, IN WRITING.
4. A SEPARATE STORM-WATER MANAGEMENT PLAN (SMWP) FOR THIS PROJECT SHALL BE COMPLETED AND AN EROSION AND STORM-WATER QUALITY CONTROL PERMIT (ESQCP) ISSUED PRIOR TO COMMENCING CONSTRUCTION. DURING CONSTRUCTION THE SWMP IS THE RESPONSIBILITY OF THE DESIGNATED STORM-WATER MANAGER, SHALL BE LOCATED ON SITE AT ALL TIMES AND SHALL BE KEPT UP TO DATE WITH WORK PROGRESS AND CHANGES IN THE FIELD.
5. ONCE THE ESQCP HAS BEEN ISSUED, THE CONTRACTOR MAY INSTALL THE INITIAL STAGE EROSION AND SEDIMENT CONTROL BMPS AS INDICATED ON THE GEC. A PRE-CONSTRUCTION MEETING BETWEEN THE CONTRACTOR, ENGINEER, AND EL PASO COUNTY WILL BE HELD PRIOR TO ANY CONSTRUCTION. IT IS THE RESPONSIBILITY OF THE APPLICANT TO COORDINATE THE MEETING TIME AND PLACE WITH COUNTY PCD INSPECTIONS STAFF.
6. SOIL EROSION CONTROL MEASURES FOR ALL SLOPES, CHANNELS, DITCHES, OR ANY DISTURBED LAND AREA SHALL BE COMPLETED WITHIN 21 CALENDAR DAYS AFTER FINAL GRADING, OR FINAL EARTH DISTURBANCE, HAS BEEN COMPLETED. DISTURBED AREAS AND STOCKPILES WHICH ARE NOT AT FINAL GRADE BUT WILL REMAIN DORMANT FOR LONGER THAN 30 DAYS SHALL ALSO BE MULCHED WITHIN 21 DAYS AFTER INTERIM GRADING. AN AREA THAT IS GOING TO REMAIN IN AN INTERIM STATE FOR MORE THAN 60 DAYS SHALL ALSO BE SEEDED. ALL TEMPORARY SOIL EROSION CONTROL MEASURES AND BMPS SHALL BE MAINTAINED UNTIL PERMANENT SOIL EROSION CONTROL MEASURES ARE IMPLEMENTED AND ESTABLISHED.
7. TEMPORARY SOIL EROSION CONTROL FACILITIES SHALL BE REMOVED AND EARTH DISTURBANCE AREAS GRADED AND STABILIZED WITH PERMANENT SOIL EROSION CONTROL MEASURES PURSUANT TO STANDARDS AND SPECIFICATION PRESCRIBED IN THE DCM VOLUME II AND THE ENGINEERING CRITERIA MANUAL (ECM) APPENDIX I.
8. ALL PERSONS ENGAGED IN EARTH DISTURBANCE SHALL IMPLEMENT AND MAINTAIN ACCEPTABLE SOIL EROSION AND SEDIMENT CONTROL MEASURES INCLUDING BMPS IN CONFORMANCE WITH THE EROSION CONTROL TECHNICAL STANDARDS OF THE DRAINAGE CRITERIA MANUAL (DCM) VOLUME II AND IN ACCORDANCE WITH THE STORM-WATER MANAGEMENT PLAN (SWMP).
9. ALL TEMPORARY EROSION CONTROL FACILITIES INCLUDING BMPS AND ALL PERMANENT FACILITIES INTENDED TO CONTROL EROSION OF ANY EARTH DISTURBANCE OPERATIONS, SHALL BE INSTALLED AS DEFINED IN THE APPROVED PLANS, THE SWMP AND THE DCM VOLUME II AND MAINTAINED THROUGHOUT THE DURATION OF THE EARTH DISTURBANCE OPERATION.
10. ANY EARTH DISTURBANCE SHALL BE CONDUCTED IN SUCH A MANNER SO AS TO EFFECTIVELY REDUCE ACCELERATED SOIL EROSION AND RESULTING SEDIMENTATION. ALL DISTURBANCES SHALL BE DESIGNED, CONSTRUCTED, AND COMPLETED SO THAT THE EXPOSED AREA OF ANY DISTURBED LAND SHALL BE LIMITED TO THE SHORTEST PRACTICAL PERIOD OF TIME.
11. ANY TEMPORARY OR PERMANENT FACILITY DESIGNED AND CONSTRUCTED FOR THE CONVEYANCE OF STORM-WATER AROUND, THROUGH, OR FROM THE EARTH DISTURBANCE AREA SHALL BE DESIGNED TO LIMIT THE DISCHARGE TO A NON-EROSIVE VELOCITY.
12. CONCRETE WASH WATER SHALL BE CONTAINED AND DISPOSED OF IN ACCORDANCE WITH THE SWMP. NO WASH WATER SHALL BE DISCHARGED TO OR ALLOWED TO RUNOFF TO STATE WATERS, INCLUDING ANY SURFACE OR SUBSURFACE STORM DRAINAGE SYSTEM OR FACILITIES.
13. EROSION CONTROL BLANKETING IS TO BE USED ON SLOPES STEEPER THAN 3:1.
14. BUILDING, CONSTRUCTION, EXCAVATION, OR OTHER WASTE MATERIALS SHALL NOT BE TEMPORARILY PLACED OR STORED IN THE STREET, ALLEY, OR OTHER PUBLIC WAY, UNLESS IN ACCORDANCE WITH AN APPROVED TRAFFIC CONTROL PLAN. BMP'S MAY BE REQUIRED BY EL PASO COUNTY ENGINEERING IF DEEMED NECESSARY, BASED ON SPECIFIC CONDITIONS AND CIRCUMSTANCES.
15. VEHICLE TRACKING OF SOILS AND CONSTRUCTION DEBRIS OFF-SITE SHALL BE MINIMIZED. MATERIALS TRACKED OFFSITE SHALL BE CLEANED UP AND PROPERLY DISPOSED OF IMMEDIATELY.
16. CONTRACTOR SHALL BE RESPONSIBLE FOR THE REMOVAL OF ALL WASTES FROM THE CONSTRUCTION SITE FOR DISPOSAL IN ACCORDANCE WITH LOCAL AND STATE REGULATORY REQUIREMENTS. NO CONSTRUCTION DEBRIS, TREE SLASH, BUILDING MATERIAL WASTES OR UNUSED BUILDING MATERIALS SHALL BE BURIED, DUMPED, OR DISCHARGED AT THE SITE.
17. THE OWNER, SITE DEVELOPER, CONTRACTOR, AND/OR THEIR AUTHORIZED AGENTS SHALL BE RESPONSIBLE FOR THE REMOVAL OF ALL CONSTRUCTION DEBRIS, DIRT, TRASH, ROCK, SEDIMENT, AND SAND THAT MAY ACCUMULATE IN THE STORM SEWER OR OTHER DRAINAGE CONVEYANCE SYSTEM AND STORM-WATER APPURTENANCES AS A RESULT OF SITE DEVELOPMENT.
18. THE QUANTITY OF MATERIALS STORED ON THE PROJECT SITE SHALL BE LIMITED, AS MUCH AS PRACTICAL, TO THAT QUANTITY REQUIRED TO PERFORM THE WORK IN AN ORDERLY SEQUENCE. ALL MATERIALS STORED ON-SITE SHALL BE STORED IN A NEAT, ORDERLY MANNER, IN THEIR ORIGINAL CONTAINERS, WITH ORIGINAL MANUFACTURER'S LABELS.
19. NO CHEMICALS ARE TO BE USED BY THE CONTRACTOR, WHICH HAVE THE POTENTIAL TO BE RELEASED IN STORM-WATER UNLESS PERMISSION FOR THE USE OF A SPECIFIC CHEMICAL IS GRANTED IN WRITING BY THE ECM ADMINISTRATOR. IN GRANTING THE USE OF SUCH CHEMICALS, SPECIAL CONDITIONS AND MONITORING MAY BE REQUIRED.
20. BULK STORAGE STRUCTURES FOR PETROLEUM PRODUCTS AND OTHER CHEMICALS SHALL HAVE ADEQUATE PROTECTION SO AS TO CONTAIN ALL SPILLS AND PREVENT ANY SPILLED MATERIAL FROM ENTERING STATE WATERS, INCLUDING ANY SURFACE OR SUBSURFACE STORM DRAINAGE SYSTEM OR FACILITIES.
21. NO PERSON SHALL CAUSE THE IMPEDIMENT OF STORM-WATER FLOW IN THE FLOW LINE OF THE CURB AND GUTTER OR IN THE DITCH-LINE.
22. INDIVIDUALS SHALL COMPLY WITH THE "COLORADO WATER QUALITY CONTROL ACT" (TITLE 25, ARTICLE 8, CRS), AND THE "CLEAN WATER ACT" (33 USC 1344). IN ADDITION TO THE REQUIREMENTS INCLUDED IN THE DCM VOLUME II AND THE ECM APPENDIX I. ALL APPROPRIATE PERMITS MUST BE OBTAINED BY THE CONTRACTOR PRIOR TO CONSTRUCTION (NPDES, FLOODPLAIN, 404, FUGITIVE DUST, ETC.). IN THE EVENT OF CONFLICTS BETWEEN THESE REQUIREMENTS AND LAWS, RULES, OR REGULATIONS OF OTHER FEDERAL, STATE, OR COUNTY AGENCIES, THE MORE RESTRICTIVE LAWS, RULES, OR REGULATIONS SHALL APPLY.
23. ALL CONSTRUCTION TRAFFIC MUST ENTER/EXIT THE SITE AT APPROVED CONSTRUCTION ACCESS POINTS.
24. PRIOR TO ACTUAL CONSTRUCTION THE PERMITEE SHALL VERIFY THE LOCATION OF EXISTING UTILITIES.
25. A WATER SOURCE SHALL BE AVAILABLE ON SITE DURING EARTHWORK OPERATIONS AND UTILIZED AS REQUIRED TO MINIMIZE DUST FROM EARTHWORK EQUIPMENT AND WIND.
26. THE SOILS REPORT FOR THIS SITE HAS BEEN PREPARED BY RMG INC AND SHALL BE CONSIDERED A PART OF THESE PLANS.
27. AT LEAST TEN DAYS PRIOR TO THE ANTICIPATED START OF CONSTRUCTION, FOR PROJECTS THAT WILL DISTURB 1 ACRE OR MORE, THE OWNER OR OPERATOR OF CONSTRUCTION ACTIVITY SHALL SUBMIT A PERMIT APPLICATION FOR STORM-WATER DISCHARGE TO THE COLORADO DEPARTMENT OF PUBLIC HEALTH AND ENVIRONMENT, WATER QUALITY DIVISION. THE APPLICATION CONTAINS CERTIFICATION OF COMPLETION OF A STORM-WATER MANAGEMENT PLAN (SWMP), OF WHICH THIS GRADING AND EROSION CONTROL PLAN MAY BE A PART. FOR INFORMATION OR APPLICATION MATERIALS CONTACT: CDPHE, 4300 CHERRY CREEK DR. S.,DENVER, CO 80246-1530, PH: 303-692-3500

PCD PROJECT NO. PPR-16-040

DATE: 02/09/19
JOB NO. 160301
CAD FILE NO. 160301-Base
DRAWN BY HJG
DESIGNED BY MAB
PROJECT ENGINEER MAB
PROJECT MANAGER MAB
SCALE: HORZ: N/A VERT: N/A

PREPARED BY:

3520 Austin Bluffs Parkway
Suite 102
Colorado Springs, CO 80918
(719) 266-5212
fax: (719) 266-5341

NO.	DATE	REVISION	BY

JUDGE ORR ROAD RV PARK & STORAGE

COLORADO SPRINGS, COLORADO

DRAINAGE, GRADING & EROSION CONTROL DETAIL

Silt Fence (SF) SC-1

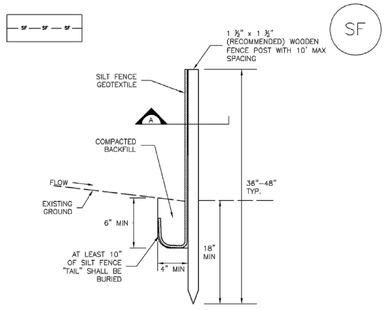

SILT FENCE

SECTION A

SF–1. SILT FENCE

SC-1 Silt Fence (SF)

SILT FENCE INSTALLATION NOTES

1. SILT FENCE MUST BE PLACED AWAY FROM THE TOE OF THE SLOPE TO ALLOW FOR WATER PONDING. SILT FENCE AT THE TOE OF A SLOPE SHOULD BE INSTALLED IN A FLAT LOCATION AT LEAST SEVERAL FEET (2–5 FT) FROM THE TOE OF THE SLOPE TO ALLOW ROOM FOR PONDING AND DEPOSITION.

2. A UNIFORM 6" X 4" ANCHOR TRENCH SHALL BE EXCAVATED USING TRENCHER OR SILT FENCE INSTALLATION DEVICE. NO ROAD GRADERS, BACKHOES, OR SIMILAR EQUIPMENT SHALL BE USED.

3. COMPACT ANCHOR TRENCH BY HAND WITH A "JUMPING JACK" OR BY WHEEL ROLLING. COMPACTION SHALL BE SUCH THAT SILT FENCE RESISTS BEING PULLED OUT OF ANCHOR TRENCH BY HAND.

4. SILT FENCE SHALL BE PULLED TIGHT AS IT IS ANCHORED TO THE STAKES. THERE SHOULD BE NO NOTICEABLE SAG BETWEEN STAKES AFTER IT HAS BEEN ANCHORED TO THE STAKES.

5. SILT FENCE FABRIC SHALL BE ANCHORED TO THE STAKES USING 1" HEAVY DUTY STAPLES OR NAILS WITH 1" HEADS. STAPLES AND NAILS SHOULD BE PLACED 3" ALONG THE FABRIC DOWN THE STAKE.

6. AT THE END OF A RUN OF SILT FENCE ALONG A CONTOUR, THE SILT FENCE SHOULD BE TURNED PERPENDICULAR TO THE CONTOUR TO CREATE A "J–HOOK." THE "J–HOOK" EXTENDING PERPENDICULAR TO THE CONTOUR SHOULD BE OF SUFFICIENT LENGTH TO KEEP RUNOFF FROM FLOWING AROUND THE END OF THE SILT FENCE (TYPICALLY 10' – 20').

7. SILT FENCE SHALL BE INSTALLED PRIOR TO ANY LAND DISTURBING ACTIVITIES.

SILT FENCE MAINTENANCE NOTES

1. INSPECT BMPs EACH WORKDAY, AND MAINTAIN THEM IN EFFECTIVE OPERATING CONDITION. MAINTENANCE OF BMPs SHOULD BE PROACTIVE, NOT REACTIVE. INSPECT BMPs AS SOON AS POSSIBLE (AND ALWAYS WITHIN 24 HOURS) FOLLOWING A STORM THAT CAUSES SURFACE EROSION, AND PERFORM NECESSARY MAINTENANCE.

2. FREQUENT OBSERVATIONS AND MAINTENANCE ARE NECESSARY TO MAINTAIN BMPs IN EFFECTIVE OPERATING CONDITION. INSPECTIONS AND CORRECTIVE MEASURES SHOULD BE DOCUMENTED THOROUGHLY.

3. WHERE BMPs HAVE FAILED, REPAIR OR REPLACEMENT SHOULD BE INITIATED UPON DISCOVERY OF THE FAILURE.

4. SEDIMENT ACCUMULATED UPSTREAM OF THE SILT FENCE SHALL BE REMOVED AS NEEDED TO MAINTAIN THE FUNCTIONALITY OF THE BMP, TYPICALLY WHEN DEPTH OF ACCUMULATED SEDIMENTS IS APPROXIMATELY 6".

5. REPAIR OR REPLACE SILT FENCE WHEN THERE ARE SIGNS OF WEAR, SUCH AS SAGGING, TEARING, OR COLLAPSE.

6. SILT FENCE IS TO REMAIN IN PLACE UNTIL THE UPSTREAM DISTURBED AREA IS STABILIZED AND APPROVED BY THE LOCAL JURISDICTION, OR IS REPLACED BY AN EQUIVALENT PERIMETER SEDIMENT CONTROL BMP.

7. WHEN SILT FENCE IS REMOVED, ALL DISTURBED AREAS SHALL BE COVERED WITH TOPSOIL, SEEDED AND MULCHED OR OTHERWISE STABILIZED AS APPROVED BY LOCAL JURISDICTION.

(DETAIL ADAPTED FROM TOWN OF PARKER, COLORADO AND CITY OF AURORA, NOT AVAILABLE IN AUTOCAD)

NOTE: MANY JURISDICTIONS HAVE BMP DETAILS THAT VARY FROM UDFCD STANDARD DETAILS. CONSULT WITH LOCAL JURISDICTIONS AS TO WHICH DETAIL SHOULD BE USED WHEN DIFFERENCES ARE NOTED.

SC-3 Straw Bale Barrier (SBB)

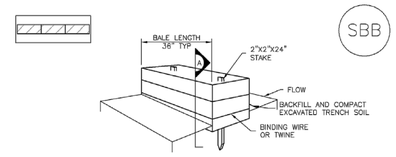

STRAW BALE

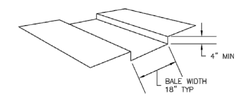

TRENCH FOR STRAW BALE

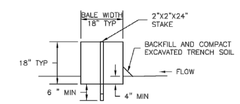

SECTION A

SBB–1. STRAW BALE

Straw Bale Barrier (SBB) SC-3

STRAW BALE INSTALLATION NOTES

1. SEE PLAN VIEW FOR:
   –LOCATION(S) OF STRAW BALES.

2. STRAW BALES SHALL CONSIST OF CERTIFIED WEED FREE STRAW OR HAY. LOCAL JURISDICTIONS MAY REQUIRE PROOF THAT BALES ARE WEED FREE.

3. STRAW BALES SHALL CONSIST OF APPROXIMATELY 1 CUBIC FEET OF STRAW OR HAY AND WEIGH NOT LESS THAN 35 POUNDS.

4. WHEN STRAW BALES ARE USED IN SERIES AS A BARRIER, THE END OF EACH BALE SHALL BE TIGHTLY ABUTTING ONE ANOTHER.

5. STRAW BALE DIMENSIONS SHALL BE APPROXIMATELY 36"x18"x18".

6. A UNIFORM ANCHOR TRENCH SHALL BE EXCAVATED TO A DEPTH OF 4". STRAW BALES SHALL BE PLACED SO THAT BINDING TWINE IS ENCOMPASSING THE VERTICAL SIDES OF THE BALE(S). ALL EXCAVATED SOIL SHALL BE PLACED ON THE UPHILL SIDE OF THE STRAW BALE(S) AND COMPACTED.

7. TWO (2) WOODEN STAKES SHALL BE USED TO HOLD EACH BALE IN PLACE. WOODEN STAKES SHALL BE 2"X2"X24". WOODEN STAKES SHALL BE DRIVEN 6" INTO THE GROUND.

STRAW BALE MAINTENANCE NOTES

1. INSPECT BMPs EACH WORKDAY, AND MAINTAIN THEM IN EFFECTIVE OPERATING CONDITION. MAINTENANCE OF BMPs SHOULD BE PROACTIVE, NOT REACTIVE. INSPECT BMPs AS SOON AS POSSIBLE (AND ALWAYS WITHIN 24 HOURS) FOLLOWING A STORM THAT CAUSES SURFACE EROSION, AND PERFORM NECESSARY MAINTENANCE.

2. FREQUENT OBSERVATIONS AND MAINTENANCE ARE NECESSARY TO MAINTAIN BMPs IN EFFECTIVE OPERATING CONDITION. INSPECTIONS AND CORRECTIVE MEASURES SHOULD BE DOCUMENTED THOROUGHLY.

3. WHERE BMPs HAVE FAILED, REPAIR OR REPLACEMENT SHOULD BE INITIATED UPON DISCOVERY OF THE FAILURE.

4. STRAW BALES SHALL BE REPLACED IF THEY BECOME HEAVILY SOILED, ROTTEN, OR DAMAGED BEYOND REPAIR.

5. SEDIMENT ACCUMULATED UPSTREAM OF STRAW BALE BARRIER SHALL BE REMOVED AS NEEDED TO MAINTAIN FUNCTIONALITY OF THE BMP, TYPICALLY WHEN DEPTH OF ACCUMULATED SEDIMENTS IS APPROXIMATELY ½ OF THE HEIGHT OF THE STRAW BALE BARRIER.

6. STRAW BALES ARE TO REMAIN IN PLACE UNTIL THE UPSTREAM DISTURBED AREA IS STABILIZED AND APPROVED BY THE LOCAL JURISDICTION.

7. WHEN STRAW BALES ARE REMOVED, ALL DISTURBED AREAS SHALL BE COVERED WITH TOPSOIL, SEEDED AND MULCHED OR OTHERWISE STABILIZED AS APPROVED BY LOCAL JURISDICTION.

(DETAILS ADAPTED FROM TOWN OF PARKER, COLORADO, NOT AVAILABLE IN AUTOCAD)

NOTE: MANY JURISDICTIONS HAVE BMP DETAILS THAT VARY FROM UDFCD STANDARD DETAILS. CONSULT WITH LOCAL JURISDICTIONS AS TO WHICH DETAIL SHOULD BE USED WHEN DIFFERENCES ARE NOTED.

Sediment Basin (SB) SC-7

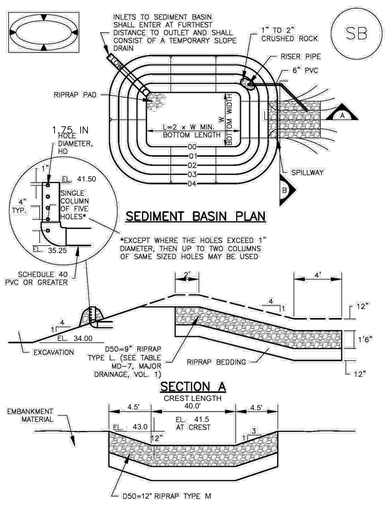

SC-7 Sediment Basin (SB)

TABLE SB–1. SIZING INFORMATION FOR STANDARD SEDIMENT BASIN

Upstream Drainage Area (rounded to nearest acre), (ac)	Basin Bottom Width (W), (ft)	Spillway Crest Length (CL), (ft)	Hole Diameter (HD), (in)
1	12 ½	2	5/32
2	21	3	7/64
3	28	5	3/16
4	33 ½	6	9/64
5	38 ½	8	11/64
6	43	9	3/32
7	47 ½	11	13/64
8	51	12	7/32
9	55	13	1/4
10	58 ½	15	9/32
11	61	16	5/16
12	64	18	1
13	67 ½	19	1 1/16
14	70 ½	21	1 1/8
15	73 ½	22	1 3/16

SEDIMENT BASIN INSTALLATION NOTES

1. SEE PLAN VIEW FOR:
   –LOCATION OF SEDIMENT BASIN.
   –TYPE OF BASIN (STANDARD BASIN OR NONSTANDARD BASIN).
   –FOR STANDARD BASIN, BOTTOM WIDTH W, CREST LENGTH CL, AND HOLE DIAMETER, HD.
   –FOR NONSTANDARD BASIN, SEE CONSTRUCTION DRAWINGS FOR DESIGN OF BASIN INCLUDING RISER HEIGHT H, NUMBER OF COLUMNS N, HOLE DIAMETER HD AND PIPE DIAMETER D.

2. FOR STANDARD BASIN, BOTTOM DIMENSION MAY BE MODIFIED AS LONG AS BOTTOM AREA IS NOT REDUCED.

3. SEDIMENT BASINS SHALL BE INSTALLED PRIOR TO ANY OTHER LAND–DISTURBING ACTIVITY THAT RELIES ON ON BASINS AS AS A STORMWATER CONTROL.

4. EMBANKMENT MATERIAL SHALL CONSIST OF SOIL FREE OF DEBRIS, ORGANIC MATERIAL, AND ROCKS OR CONCRETE GREATER THAN 3 INCHES AND SHALL HAVE A MINIMUM OF 15 PERCENT BY WEIGHT PASSING THE NO. 200 SIEVE.

5. EMBANKMENT MATERIAL SHALL BE COMPACTED TO AT LEAST 95 PERCENT OF MAXIMUM DENSITY IN ACCORDANCE WITH ASTM D698.

6. PIPE SCH 40 OR GREATER SHALL BE USED.

7. THE DETAILS SHOWN ON THESE SHEETS PERTAIN TO STANDARD SEDIMENT BASIN(S) FOR DRAINAGE AREAS LESS THAN 15 ACRES. SEE CONSTRUCTION DRAWINGS FOR EMBANKMENT, STORAGE VOLUME, SPILLWAY, OUTLET, AND OUTLET PROTECTION DETAILS FOR ANY SEDIMENT BASIN(S) THAT HAVE BEEN INDIVIDUALLY DESIGNED FOR DRAINAGE AREAS LARGER THAN 15 ACRES.

Sediment Basin (SB) SC-7

SEDIMENT BASIN MAINTENANCE NOTES

1. INSPECT BMPs EACH WORKDAY, AND MAINTAIN THEM IN EFFECTIVE OPERATING CONDITION. MAINTENANCE OF BMPs SHOULD BE PROACTIVE, NOT REACTIVE. INSPECT BMPs AS SOON AS POSSIBLE (AND ALWAYS WITHIN 24 HOURS) FOLLOWING A STORM THAT CAUSES SURFACE EROSION, AND PERFORM NECESSARY MAINTENANCE.

2. FREQUENT OBSERVATIONS AND MAINTENANCE ARE NECESSARY TO MAINTAIN BMPs IN EFFECTIVE OPERATING CONDITION. INSPECTIONS AND CORRECTIVE MEASURES SHOULD BE DOCUMENTED THOROUGHLY.

3. WHERE BMPs HAVE FAILED, REPAIR OR REPLACEMENT SHOULD BE INITIATED UPON DISCOVERY OF THE FAILURE.

4. SEDIMENT ACCUMULATED IN BASIN SHALL BE REMOVED AS NEEDED TO MAINTAIN BMP EFFECTIVENESS, TYPICALLY WHEN SEDIMENT DEPTH REACHES ONE FOOT (I.E., TWO FEET BELOW THE SPILLWAY CREST).

5. SEDIMENT BASINS ARE TO REMAIN IN PLACE UNTIL THE UPSTREAM DISTURBED AREA IS STABILIZED AND GRASS COVER IS ACCEPTED BY THE LOCAL JURISDICTION.

6. WHEN SEDIMENT BASINS ARE REMOVED, ALL DISTURBED AREAS SHALL BE COVERED WITH TOPSOIL, SEEDED AND MULCHED OR OTHERWISE STABILIZED AS APPROVED BY LOCAL JURISDICTION.

(DETAILS ADAPTED FROM DOUGLAS COUNTY, COLORADO)

NOTE: MANY JURISDICTIONS HAVE BMP DETAILS THAT VARY FROM UDFCD STANDARD DETAILS. CONSULT WITH LOCAL JURISDICTIONS AS TO WHICH DETAIL SHOULD BE USED WHEN DIFFERENCES ARE NOTED.

NOTE: PROPOSED 2.5 Ac. FT EDB TO BE USED AS SEDIMENT BASIN

PCD PROJECT NO. PPR-16-040

DESIGNED BY MAB | PROJECT ENGINEER MAB | PROJECT MANAGER MAB | SCALE: HORZ. N/A VERT. N/A
DATE: 02/05/19 | JOB NO. 160301 | CAD FILE NO. 160301-Base | DRAWN BY HAS

PREPARED BY:

3520 Austin Bluffs Parkway
Suite 102
Colorado Springs, CO 80918
(719) 266-5212
fax: (719) 266-5341

NO.	DATE	REVISION	BY

JUDGE ORR ROAD RV PARK & STORAGE
COLORADO SPRINGS, COLORADO
EROSION CONTROL DETAILS

SHEET 4 of 7

M:\LAND PROJECTS\2016\160301-Judge Orr Road RV Park\DWG\160301-Base.dwg jim.Gill Thu, 05/02/19 6:27 PM

MM-1 Concrete Washout Area (CWA)

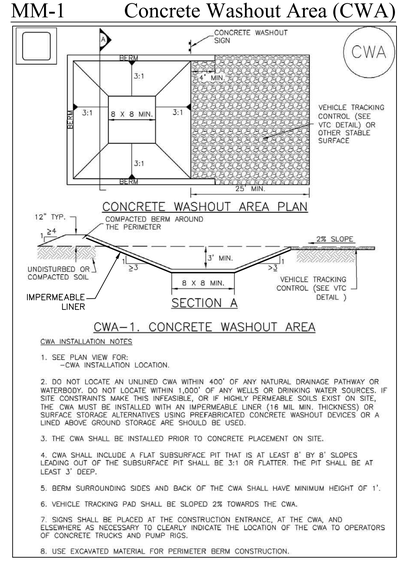

CWA–1. CONCRETE WASHOUT AREA

CWA INSTALLATION NOTES

1. SEE PLAN VIEW FOR:
   –CWA INSTALLATION LOCATION.

2. DO NOT LOCATE AN UNLINED CWA WITHIN 400' OF ANY NATURAL DRAINAGE PATHWAY OR WATERBODY. DO NOT LOCATE WITHIN 1,000' OF ANY WELLS OR DRINKING WATER SOURCES. IF SITE CONSTRAINTS MAKE THIS INFEASIBLE, OR IF HIGHLY PERMEABLE SOILS EXIST ON SITE, THE CWA MUST BE INSTALLED WITH AN IMPERMEABLE LINER (16 MIL MIN. THICKNESS) OR SURFACE STORAGE ALTERNATIVES USING PREFABRICATED CONCRETE WASHOUT DEVICES OR A LINED ABOVE GROUND STORAGE ARE SHOULD BE USED.

3. THE CWA SHALL BE INSTALLED PRIOR TO CONCRETE PLACEMENT ON SITE.

4. CWA SHALL INCLUDE A FLAT SUBSURFACE PIT THAT IS AT LEAST 8' BY 8' SLOPES LEADING OUT OF THE SUBSURFACE PIT SHALL BE 3:1 OR FLATTER. THE PIT SHALL BE AT LEAST 3' DEEP.

5. BERM SURROUNDING SIDES AND BACK OF THE CWA SHALL HAVE MINIMUM HEIGHT OF 1'.

6. VEHICLE TRACKING PAD SHALL BE SLOPED 2% TOWARDS THE CWA.

7. SIGNS SHALL BE PLACED AT THE CONSTRUCTION ENTRANCE, AT THE CWA, AND ELSEWHERE AS NECESSARY TO CLEARLY INDICATE THE LOCATION OF THE CWA TO OPERATORS OF CONCRETE TRUCKS AND PUMP RIGS.

8. USE EXCAVATED MATERIAL FOR PERIMETER BERM CONSTRUCTION.

GENERAL NOTES

1. Do not prepare or seed frozen soils.
2. Do not seed when wind exceeds 5 mph.
3. Perform seeding only after preceding work affecting ground surface is completed.
4. Do not mulch over seeded areas when wind exceeds 15 mph.
5. Seed all disturbed areas.
6. Seed to be a blend of native prairie grasses.
7. Watering shall be provided in the form of watering trucks and spray bars.

MULCH MATERIALS

1. HAY OR STRAY MULCH
   A. Chopped of oats, wheat or rye grass hay.
   B. Free from noxious weed seeds.
   C. Rotted, brittle or molded hay is not acceptable.
   D. 50% by weight greater than 10" inch length.
2. FIBER
   A. Short wood fiber.
   B. "Conwed", "Silver Fiber" or equivalent.

BED PREPARATION

1. Prepare to a minimum depth of 4" with disc harros or chiseling tools.
2. Uproot all competitive vegetation.
3. Work soil uniformly to a smooth surface free of clods, stones over 2" in any dimension or any material which will interfere seeding equipment.
4. Till across slopes
5. Do not till when soil moisture is unsuitable.
   A. Soil texture after tillage shall be uniform, free of wet compressed or dry lumps.
6. Do not prepare seed bed more than twenty four hours in advance of seeding.
7. Fertilize at a rate of fifty (2) lbs. nitrogen per 1,000 sf.
   A. Till fertilizer into soil a minimum of two (2) inches.

SPECIES		LBS/ACRE DRILLED
Western Wheat Grass	Pasopyrum smithii	3.0
Sideoats Grama	Bouteloua curtipenula	2.0
Slender Wheat Grass	Schizachyrium scoparium	2.0
Little Bluestem	Bouteloua gracilis	0.5
Switch Grass	Pancium virgatum	2.0
Sand Dropseed	Sporobolus cryptandrus	

EROSION CONTROL PLAN NOTES

1. All disturbed areas are to be reseeded.
2. Schedule of Grading – approximate time frame of one month to complete grading and installation of erosion control measures.
3. Temporary Sediment Barriers shall be kept in place and maintained until the vegetation has been reestablished. Removal of sediment is required once it reaches half the height of the sediment control log.

PCD PROJECT NO. PPR-16-040

DATE: 02/05/19
JOB NO. 160301
CAD FILE NO. 160301-Base
DRAWN BY HJS
DESIGNED BY MAB
PROJECT ENGINEER MAB
PROJECT MANAGER MAB
SCALE: HORZ. N/A VERT. N/A

PREPARED BY:

3520 Austin Bluffs Parkway
Suite 102
Colorado Springs, CO 80918
(719) 266-5212
fax: (719) 266-5341

NO.	DATE	REVISION	BY

JUDGE ORR ROAD RV PARK & STORAGE
COLORADO SPRINGS, COLORADO
EROSION CONTROL DETAILS

M:\LAND PROJECTS\2016\160301-Judge Orr Road RV Park\DWG\160301-Base.dwg jim.Gill Thu, 05/02/19 6:27 PM

Standard Notes for El Paso County Construction Plans

ALL DRAINAGE AND ROADWAY CONSTRUCTION SHALL MEET THE STANDARDS AND SPECIFICATIONS OF THE CITY OF COLORADO SPRINGS/EL PASO COUNTY DRAINAGE CRITERIA MANUAL, VOLUMES 1 AND 2, AND THE EL PASO COUNTY ENGINEERING CRITERIA MANUAL.

1. CONTRACTOR SHALL BE RESPONSIBLE FOR THE NOTIFICATION AND FIELD NOTIFICATION OF ALL EXISTING UTILITIES, WHETHER SHOWN ON THE PLANS OR NOT, BEFORE BEGINNING CONSTRUCTION. LOCATION OF EXISTING UTILITIES SHALL BE VERIFIED BY THE CONTRACTOR PRIOR TO CONSTRUCTION. CALL 811 TO CONTACT THE UTILITY NOTIFICATION CENTER OF COLORADO (UNCC).

2. CONTRACTOR SHALL KEEP A COPY OF THESE APPROVED PLANS, THE GRADING AND EROSION CONTROL PLAN, THE STORMWATER MANAGEMENT PLAN (SWMP), THE SOILS AND GEOTECHNICAL REPORT, AND THE APPROPRIATE DESIGN AND CONSTRUCTION STANDARDS AND SPECIFICATIONS AT THE JOB SITE AT ALL TIMES, INCLUDING THE FOLLOWING:
   a. EL PASO COUNTY ENGINEERING CRITERIA MANUAL (ECM)
   b. CITY OF COLORADO SPRINGS/EL PASO COUNTY DRAINAGE CRITERIA MANUAL, VOLUMES 1 AND 2
   c. COLORADO DEPARTMENT OF TRANSPORTATION (CDOT) STANDARD SPECIFICATIONS FOR ROAD AND BRIDGE CONSTRUCTION
   d. CDOT M & S STANDARDS

4. NOTWITHSTANDING ANYTHING DEPICTED IN THESE PLANS IN WORDS OR GRAPHIC REPRESENTATION, ALL DESIGN AND CONSTRUCTION RELATED TO ROADS, STORM DRAINAGE AND EROSION CONTROL SHALL CONFORM TO THE STANDARDS AND REQUIREMENTS OF THE MOST RECENT VERSION OF THE RELEVANT ADOPTED EL PASO COUNTY STANDARDS, INCLUDING THE LAND DEVELOPMENT CODE, THE ENGINEERING CRITERIA MANUAL, THE DRAINAGE CRITERIA MANUAL, AND THE DRAINAGE CRITERIA MANUAL VOLUME 2. ANY DEVIATIONS FROM REGULATIONS AND STANDARDS MUST BE REQUESTED, AND APPROVED, IN WRITING. ANY MODIFICATIONS NECESSARY TO MEET CRITERIA AFTER-THE-FACT WILL BE ENTIRELY THE DEVELOPER'S RESPONSIBILITY TO RECTIFY.

5. IT IS THE DESIGN ENGINEER'S RESPONSIBILITY TO ACCURATELY SHOW EXISTING CONDITIONS, BOTH ONSITE AND OFFSITE, ON THE CONSTRUCTION PLANS. ANY MODIFICATIONS NECESSARY DUE TO CONFLICTS, OMISSIONS, OR CHANGED CONDITIONS WILL BE ENTIRELY THE DEVELOPER'S RESPONSIBILITY TO RECTIFY.

6. CONTRACTOR SHALL SCHEDULE A PRE-CONSTRUCTION MEETING WITH EL PASO COUNTY PLANNING AND COMMUNITY DEVELOPEMENT (PCD) – INSPECTIONS, PRIOR TO STARTING CONSTRUCTION.

7. IT IS THE CONTRACTOR'S RESPONSIBILITY TO UNDERSTAND THE REQUIREMENTS OF ALL JURISDICTIONAL AGENCIES AND TO OBTAIN ALL REQUIRED PERMITS, INCLUDING BUT NOT LIMITED TO EL PASO COUNTY EROSION AND STORMWATER QUALITY CONTROL PERMIT (ESQCP), REGIONAL BUILDING FLOODPLAIN DEVELOPMENT PERMIT, U.S. ARMY CORPS OF ENGINEERS-ISSUED 401 AND/OR 404 PERMITS, AND COUNTY AND STATE FUGITIVE DUST PERMITS.

8. CONTRACTOR SHALL NOT DEVIATE FROM THE PLANS WITHOUT FIRST OBTAINING WRITTEN APPROVAL FROM THE DESIGN ENGINEER AND PCD. CONTRACTOR SHALL NOTIFY THE DESIGN ENGINEER IMMEDIATELY UPON DISCOVERY OF ANY ERRORS OR INCONSISTENCIES.

9. ALL STORM DRAIN PIPE SHALL BE CLASS III RCP UNLESS OTHERWISE NOTED AND APPROVED BY PCD.

10. CONTRACTOR SHALL COORDINATE GEOTECHNICAL TESTING PER ECM STANDARDS. PAVEMENT DESIGN SHALL BE APPROVED BY EL PASO COUNTY PCD PRIOR TO PLACEMENT OF CURB AND GUTTER AND PAVEMENT.

11. ALL CONSTRUCTION TRAFFIC MUST ENTER/EXIT THE SITE AT APPROVED CONSTRUCTION ACCESS POINTS.

12. SIGHT VISIBILITY TRIANGLES AS IDENTIFIED IN THE PLANS SHALL BE PROVIDED AT ALL INTERSECTIONS. OBSTRUCTIONS GREATER THAN 18 INCHES ABOVE FLOWLINE ARE NOT ALLOWED WITHIN SIGHT TRIANGLES.

13. SIGNING AND STRIPING SHALL COMPLY WITH EL PASO COUNTY DOT AND MUTCD CRITERIA. [IF APPLICABLE, ADDITIONAL SIGNING AND STRIPING NOTES WILL BE PROVIDED.]

14. CONTRACTOR SHALL OBTAIN ANY PERMITS REQUIRED BY EL PASO COUNTY DOT, INCLUDING WORK WITHIN THE RIGHT-OF-WAY AND SPECIAL TRANSPORT PERMITS.

15. THE LIMITS OF DISTURBANCE SHALL REMAIN WITHIN THE PROPERTY LINE UNLESS OTHERWISE NOTED. THE OWNER/DEVELOPER SHALL OBTAIN WRITTEN PERMISSION AND EASEMENTS, WHERE REQUIRED, FROM ADJOINING PROPERTY OWNER(S) PRIOR TO ANY OFF-SITE DISTURBANCE, GRADING, OR CONSTRUCTION.

NOTES:

1. CONTRACTOR SHALL VERIFY LOCATION OF UTILITIES PRIOR TO ANY CONSTRUCTION.
2. CONTRACTOR SHALL NOTIFY EL PASO COUNTY DEPARTMENT OF TRANSPORTATION FOR A PRE-CONSTRUCTION CONFERENCE PRIOR TO COMMENCEMENT OF CONSTRUCTION.
3. CONTRACTOR SHALL OBTAIN NECESSARY CONSTRUCTION PERMITS PRIOR TO CONSTRUCTION.
4. ALL ROAD AND DRAINAGE CONSTRUCTION SHALL CONFORM TO EL PASO COUNTY STANDARD SPECIFICATIONS.

NOTE:

AT LEAST 10 DAYS PRIOR TO THE ANTICIPATED START OF CONSTRUCTION, FOR PROJECTS THAT WILL DISTURB ONE ACRE OR MORE, THE OWNER OR OPERATOR OF THE CONSTRUCTION ACTIVITY SHALL SUBMIT A PERMIT APPLICATION FOR STORMWATER DISCHARGE TO THE COLORADO DEPARTMENT OF PUBLIC HEALTH AND ENVIRONMENT, WATER QUALITY CONTROL DIVISION. THE APPLICATION CONTAINS CERTIFICATION OF COMPLETION OF A STORMWATER MANAGEMENT PLAN (SWMP), OF WHICH THIS GRADING AND EROSION CONTROL PLAN MAY BE A PART.

SIGNING AND STRIPING NOTES:

1. ALL SIGNS AND PAVEMENT MARKINGS SHALL BE IN COMPLIANCE WITH THE CURRENT MANUAL ON UNIFORM TRAFFIC CONTROL DEVICES (MUTCD).
2. REMOVAL OF EXISTING PAVEMENT MARKINGS SHALL BE ACCOMPLISHED BY A METHOD THAT DOES NOT MATERIALLY DAMAGE THE PAVEMENT. THE PAVEMENT MARKINGS SHALL BE REMOVED TO THE EXTENT THAT THEY WILL NOT BE VISIBLE UNDER DAY OR NIGHT CONDITIONS. AT NO TIME WILL IT BE ACCEPTABLE TO PAINT OVER EXISTING PAVEMENT MARKINGS.
3. ANY DEVIATION FROM THE STRIPING AND SIGNING PLAN SHALL BE APPROVED BY EL PASO COUNTY PLANNING AND COMMUNITY DEVELOPMENT.
4. ALL SIGNS SHOWN ON THE SIGNING AND STRIPING PLAN SHALL BE NEW SIGNS. EXISTING SIGNS MAY REMAIN OR BE REUSED IF THEY MEET CURRENT EL PASO COUNTY AND MUTCD STANDARDS.
5. STREET NAME AND REGULATORY STOP SIGNS SHALL BE ON THE SAME POST AT INTERSECTIONS.
6. ALL REMOVED SIGNS SHALL BE DISPOSED OF IN A PROPER MANNER BY THE CONTRACTOR.
7. ALL STREET NAME SIGNS SHALL HAVE "D" SERIES LETTERS, WITH LOCAL ROADWAY SIGNS BEING 4" UPPER-LOWER CASE LETTERING ON 8" BLANK AND NON-LOCAL ROADWAY SIGNS BEING 6" LETTERING, UPPER-LOWER CASE ON 12" BLANK, WITH A WHITE BORDER THAT IS NOT RECESSED. MULTI-LANE ROADWAYS WITH SPEED LIMITS OF 40 MPH OR HIGHER SHALL HAVE 8" UPPER-LOWER CASE LETTERING ON 18" BLANK WITH A WHITE BORDER THAT IS NOT RECESSED. THE WIDTH OF THE NON-RECESSED WHITE BORDERS SHALL MATCH PAGE 255 OF THE 2012 MUTCD "STANDARD HIGHWAY SIGNS"
8. ALL TRAFFIC SIGNS SHALL HAVE A MINIMUM HIGH INTENSITY PRISMATIC GRADE SHEETING.
9. ALL LOCAL RESIDENTIAL STREET SIGNS SHALL BE MOUNTED ON A 1.75" X 1.75" SQUARE TUBE SIGN POST AND STUB POST BASE. FOR OTHER APPLICATIONS, REFER TO THE CDOT STANDARD S-614-8 REGARDING USE OF THE P2 TUBULAR STEEL POST SLIPBASE DESIGN.
10. ALL SIGNS SHALL BE SINGLE SHEET ALUMINUM WITH 0.100" MINIMUM THICKNESS.
11. ALL LIMIT LINES/STOP LINES, CROSSWALK LINES, PAVEMENT LEGENDS, AND ARROWS SHALL BE A MINIMUM 125 MIL THICKNESS PREFORMED THERMOPLASTIC PAVEMENT MARKINGS WITH TAPERED LEADING EDGES PER CDOT STANDARD S-627-1. WORD AND SYMBOL MARKINGS SHALL BE THE NARROW TYPE. STOP BARS SHALL BE 24" IN WIDTH. CROSSWALKS LINES SHALL BE 12" WIDE AND 8' LONG PER CDOT S-627-1.
12. ALL LONGITUDINAL LINES SHALL BE A MINIMUM 15MIL THICKNESS EPOXY PAINT. ALL NON-LOCAL RESIDENTIAL ROADWAYS SHALL INCLUDE BOTH RIGHT AND LEFT EDGE LINE STRIPING AND ANY ADDITIONAL STRIPING AS REQUIRED BY CDOT S-627-1.
13. THE CONTRACTOR SHALL NOTIFY EL PASO COUNTY PLANNING AND COMMUNITY DEVELOPMENT (719) 520-6819 PRIOR TO AND UPON COMPLETION OF SIGNING AND STRIPING.
14. THE CONTRACTOR SHALL OBTAIN A WORK IN THE RIGHT OF WAY PERMIT FROM THE EL PASO COUNTY DEPARTMENT OF PUBLIC WORKS (DPW) PRIOR TO ANY SIGNAGE OR STRIPING WORK WITHIN AN EXISTING EL PASO COUNTY ROADWAY.

PCD PROJECT NO. PPR-16-040

DESIGNED BY MAB
PROJECT ENGINEER MAB
PROJECT MANAGER MAB
DATE: 02/26/19
JOB NO. 160301
CAD FILE NO. 160301-Base
DRAWN BY HJG
SCALE: HORZ: N/A VERT: N/A

PREPARED BY:

3520 Austin Bluffs Parkway
Suite 102
Colorado Springs, CO 80918
(719) 266-5212
fax: (719) 266-5341

NO.	DATE	REVISION	BY

JUDGE ORR ROAD RV PARK & STORAGE
COLORADO SPRINGS, COLORADO
STANDARD NOTES

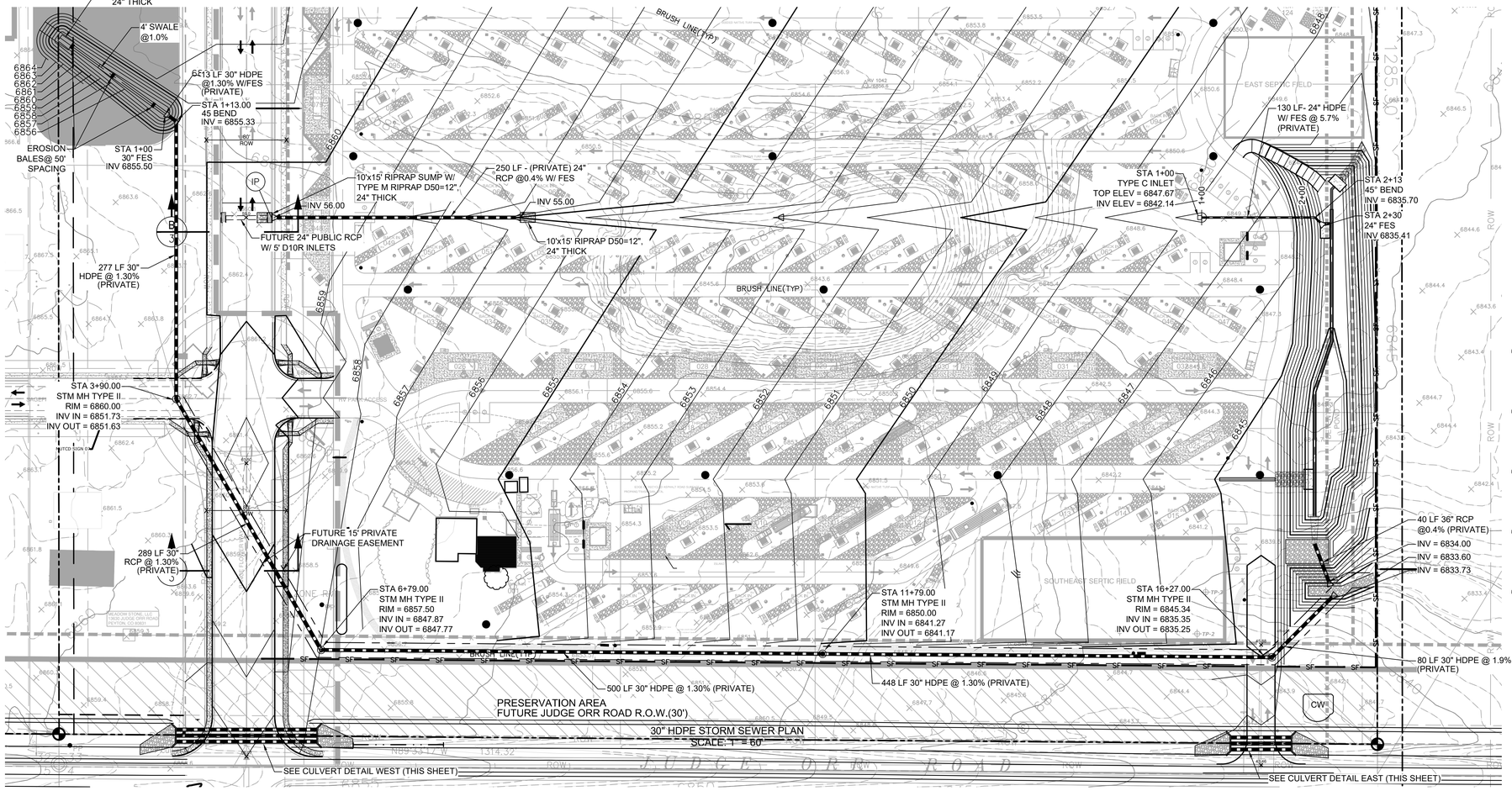

30" HDPE STORM SEWER PLAN
SCALE: 1" = 60'

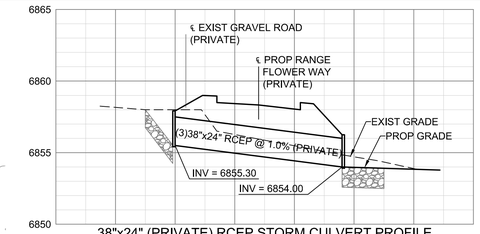

38"x24" (PRIVATE) RCEP STORM CULVERT PROFILE
RANGE FLOWER WAY
SCALES HORIZONTAL 1"=60' VERTICAL 1"=5'

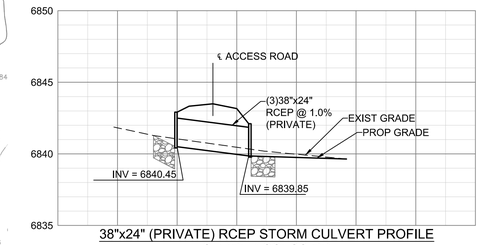

38"x24" (PRIVATE) RCEP STORM CULVERT PROFILE
S. FIRE ACCESS RD
SCALES HORIZONTAL 1"=60' VERTICAL 1"=5'

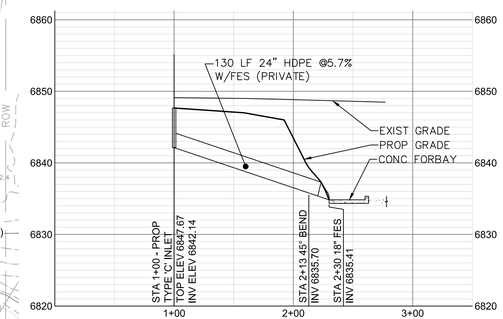

24" HDPE STORM SEWER PROFILE
SCALES HORIZONTAL 1"=60' VERTICAL 1"=10'

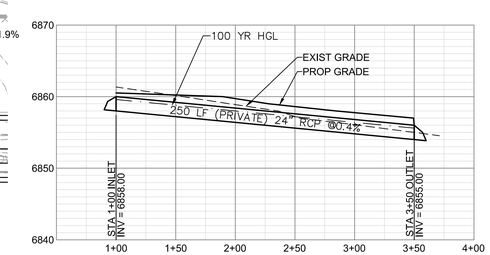

24" RCP STORM SEWER PROFILE
SCALES HORIZONTAL 1"=60' VERTICAL 1"=10'

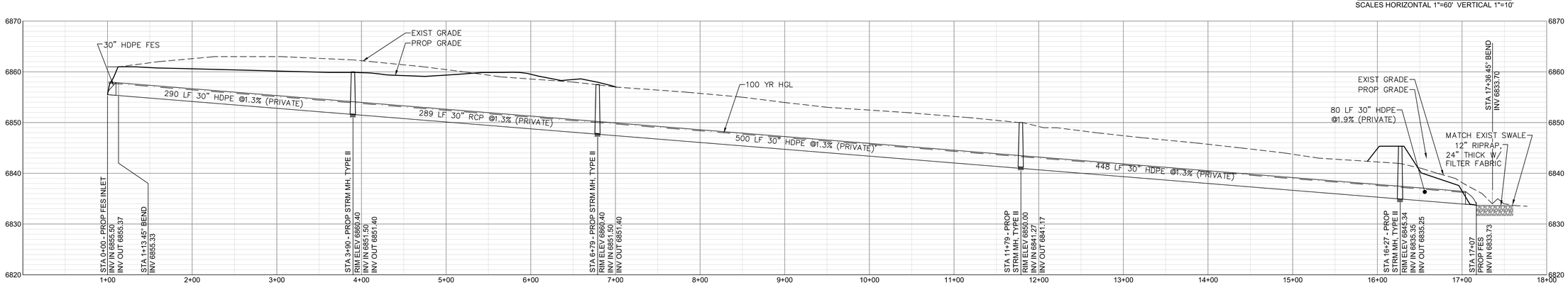

30" HDPE STORM SEWER PROFILE
SCALES HORIZONTAL 1"=60' VERTICAL 1"=10'

PCD PROJECT NO. PPR-16-040

DESIGNED BY MAB
PROJECT ENGINEER MAB
PROJECT MANAGER MAB
SCALE: HORZ. N/A VERT. N/A
DATE: 02/05/19
JOB NO. 160301
CAD FILE NO. 160301-Base
DRAWN BY HJO

PREPARED BY:

3520 Austin Bluffs Parkway
Suite 102
Colorado Springs, CO 80918
(719) 266-5212
fax: (719) 266-5341

NO.	DATE	REVISION	BY

JUDGE ORR ROAD RV PARK & STORAGE

COLORADO SPRINGS, COLORADO

STORM SEWER PROFILES

SHEET 7 of 7

M:\LAND PROJECTS\2016\160301-Judge Orr Road RV Park\DWG\160301-Base.dwg Jim.Gill Thu, 05/02/19 6:22 PM