Wastewater Report

For

Colvin Heritage Farms
Minor Subdivision

August 17, 2020

This report only shows home / OWTS and alternate OWTS location for lot 2. Existing home site, existing OWTS, and alternate OWTS need to be shown for lot 1 as well.

Report indicates evidence of shallow groundwater. Areas of shallow groundwater or potentially shallow groundwater will need to be depicted and designated as no-build areas.

PROJECT DESCRIPTION

The following presents Soils and Geology Report for the proposed Colvin Heritage Farms Minor Subdivision ("Project Site"). The 19.8 acre parcel is proposed to be subdivided two create two lots consisting of 10.1 acres (Lot 1 with an existing home and well) and 9.7 acres (Lot 2) having the respective address' of 11660 and 11545 Green Acres Lane, Colorado Springs CO 80908 in El Paso County, Colorado (Attachment 1). The parcel is currently partially developed with one residence include a well and individual non-evaporative septic system located on Lot 1. Future construction of a single family residential home with a well and individual non-evaporative septic system is proposed on Lot 2. The following information is a summary of the study that was completed on proposed Lot 2 by Geoquest LLC competed the Waste Water system soil investigation reports signed by their professional Engineer and are attached to this summary.

Soil Test Pits

Field investigations at the Project Site consisted of excavating two profile pits within Soil Type 40 on Lot 2 (Attachment 1) to evaluate the subsurface for an onsite wastewater treatment system (OWTS). The profile pits were excavated to a maximum depth of 6 feet below ground surface. Samples were collected from select intervals and evaluated for soil properties. Test Pit 1 encountered USDA soil Type 2A and bedrock. Test Pit 2 encountered USDA soil Type 3A and 4A and bedrock (Table 1).

Evidence of shallow groundwater occurred at a depth of 28 inches in Profile Pit 1 and 16 inches in Profile Pit 2 both at the weathered bedrock/Bedrock interface. Geoquest specified that the site will require an Engineered Septic Design with a design based on an LTAR of 0.3, GPD/SF and including an above grade uniformly pressure dosed soil treatment.

TABLE 1
Soil Profile Pit Summary Table
Colvin Heritage Farms Subdivision

Depth (in)	Sample Interval	USDA Soil Texture	USDA Soil Structure - Shape	Soil Structure Grade	Redoximorphic Features Present? (Y/N)	Soil Type (from Table 9 in O-14)	Cementation Class	Color
		Topsoil						
Lot 2	Pit 1	Sandy Loam	Granular	1	Yes at 28"	**Type 2 (LTAR = 0.60) Treatment Level 1**	Non-Cemented	Lt Brn 7.5YR 6/4
6" to 28"								
28" to 72"		Sandy Loam	none	Massive	Yes at 28 "	**Type 2 (LTAR = 0.60) Treatment Level 1**	Moderate	Pnk/Wt 7.5YR 8/2

Depth to groundwater (Permanent or Seasonal) at 28-inches

TABLE 1-cont-
Soil Profile Pit Summary Table
Colvin Heritage Farms Subdivision

Depth (in)	Sample Interval	USDA Soil Texture	USDA Soil Structure - Shape	Soil Structure Grade	Redoximorphic Features Present? (Y/N)	Soil Type (from Table 9 in O-14)	Cementation Class	Color
Lot 2	Pit 2	Sandy Clay Loam	Blocky	1	Yes at 16"	**Type 3 (LTAR = 0.35) Treatment Level 1**	Non-Cementted	Dk Yel Brn 10YR 3/4
6" to 16"								
16" to 40"		Sandy Clay	none	Massive	Yes at 16 "	**Type 4 (LTAR = 0.20) Treatment Level 1**	Moderate	Lt Yel Brn 2.5YR 6/3
40" to 48"		Sandy Clay Loam	none	Massive	no	**Type 3 (LTAR = 0.35) Treatment Level 1**	Moderate	Pale Brn 2.5YR 7/4
Depth to groundwater (Permanent or Seasonal) at 16-inches								

CONCLUSION

Lot 2 will have an engineered system which was designed by Geoquest LLC and in included as an attachment to this report. The discharge water quality will be in compliance with the El Paso County Department and State guidelines.

Distribution Area: Chamber Bed System (Uniformly Pressure Dosed):
A (Min) = 459.4 SF
Infiltrator Systems Inc. Quick 4 Plus Low Profile Chambers
Chambers = SF RQD / 12.0 SF per Chamber
Chambers = 459.4 SF / 12.0 SF = Min. 39 Chambers
Install 1 Zone: 2 Rows x 20 Chambers Long
Chambers Provided = 40 Total
Total Contact Area Actual = 480.0 SF
Total Contact Area Required = 459.4 SF
Note: Use of Alternative Chambers is Acceptable.
For ARC 36 Low-Profile Chambers (15.0 SF / Chamber). Install 1 Zone with 2 Rows of 16 Chambers (32 Total). 480.0 SF Provided. Contact Engineer for Clarification.

Minor Rotation or Curvature (Ie. Less Than 15°) of the Soil Treatment Area (STA) Beds to Best Fit the Site Topography is Acceptable (I.e. Parallel to Site Contours). STA shall Maintain the Approximate Orientation Shown w/ Respect to Buildings and Lot Lines. Contact Engineer for Clarification.

Install Drainage Swale on All Uphill Sides to Ensure Surface Runoff Is Diverted Around the STA. Downspouts near the STA Shall Discharge into the Swale or Extended Beyond the STA.

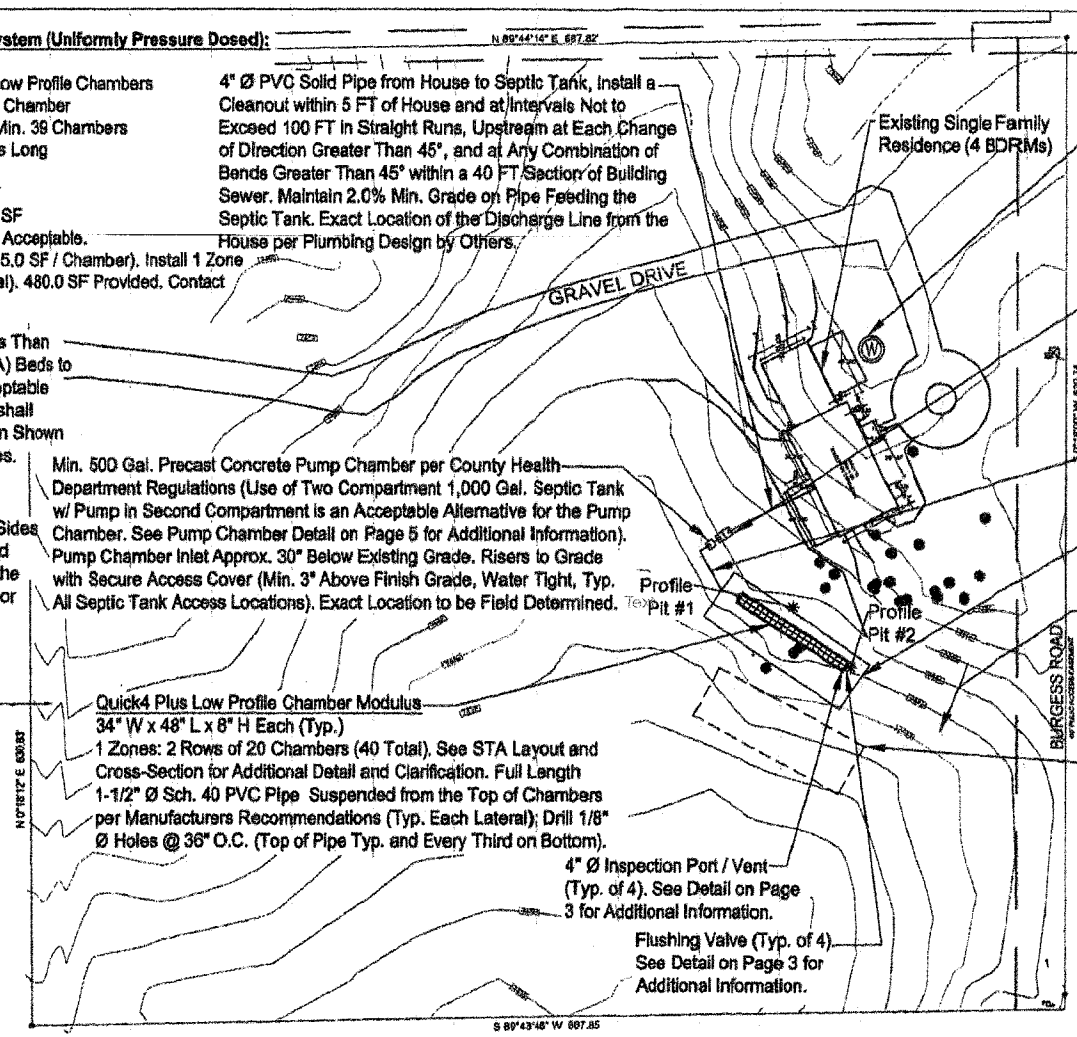

4" Ø PVC Solid Pipe from House to Septic Tank, Install a Cleanout within 5 FT of House and at Intervals Not to Exceed 100 FT in Straight Runs, Upstream at Each Change of Direction Greater Than 45°, and at Any Combination of Bends Greater Than 45° within a 40 FT Section of Building Sewer. Maintain 2.0% Min. Grade on Pipe Feeding the Septic Tank. Exact Location of the Discharge Line from the House per Plumbing Design by Others.

Existing Single Family Residence (4 BDRMs)

Proposed Well Min. 100 FT from Well to STA. Min 50 FT from Well to Septic Tanks. Field Verify Location.

New 1,250 Gal. Precast Concrete Two Compartment Septic Tank. Install EPCPH Approved Effluent Filter (Requires Regular Maintenance) on Outlet. Install Risers to Grade with Secure Access Cover (Min. 3" Above Finish Grade, Water Tight, Typ. All Septic Tank Access Locations). Exact Location to be Field Verified.

Min. 500 Gal. Precast Concrete Pump Chamber per County Health Department Regulations (Use of Two Compartment 1,000 Gal. Septic Tank w/ Pump in Second Compartment is an Acceptable Alternative for the Pump Chamber. See Pump Chamber Detail on Page 5 for Additional Information). Pump Chamber Inlet Approx. 30" Below Existing Grade. Risers to Grade with Secure Access Cover (Min. 3" Above Finish Grade, Water Tight, Typ. All Septic Tank Access Locations). Exact Location to be Field Determined.

1-1/2" Ø PVC Pipe from Pump Chamber to Level Zone Manifold. Install Vacuum Breaker at Highest Point. Slope the Line Back to the Pump Chamber (0.5% Min.).
Bottom of Sand Dimension: 35'x106'.
See Page 3 and 4 for Additional Information Related to Sand Dimensions. Min. 10 FT from Property Lines.

Native Slope: SW @ ~11%

Quick4 Plus Low Profile Chamber Modulus
34" W x 48" L x 8" H Each (Typ.)
1 Zones: 2 Rows of 20 Chambers (40 Total). See STA Layout and Cross-Section for Additional Detail and Clarification. Full Length 1-1/2" Ø Sch. 40 PVC Pipe Suspended from the Top of Chambers per Manufacturers Recommendations (Typ. Each Lateral); Drill 1/8" Ø Holes @ 36" O.C. (Top of Pipe Typ. and Every Third on Bottom).

Primary Alternate Soil Treatment Area (STA) Location. Alternate STA Location Must be Protected and Preserved for Future STA Use.

4" Ø Inspection Port / Vent (Typ. of 4). See Detail on Page 3 for Additional Information.

Flushing Valve (Typ. of 4). See Detail on Page 3 for Additional Information.

GEOQUEST, LLC.
6825 SILVER PONDS HEIGHTS
SUITE 101
COLORADO SPRINGS, CO
80908

OFFICE: (719) 481-4560
FAX: (719) 481-9204

COLORADO LICENSED DOUGLAS J. FREITER 55147 1 April 19 PROFESSIONAL ENGINEER

*Indicates Geoquest, LLC. Profile Pit Test Locations
Location from Southeast Lot Corner to Profile Pit #1: N. 61° E. - 577'
Location from Profile Pit #1 to Profile Pit #2: S. 44° E. - 54'
GPS Coordinates Profile Pit #1: N. 38° 59' 57.81", W. 104° 38' 42.62"
GPS Coordinates Profile Pit #2: N. 38° 59' 57.56", W. 104° 39' 42.13"

BURGESS ROAD
W/ PUBLIC ACCESS EASEMENT

Site Plan

N
0 25 50 75
GRAPHIC SCALE IN FEET
SCALE: 1" = 75'

Project: 17-0660	**Project Name and Address**
Sheet: 2 of 5	Michelle Colvin
Date: 26 March 2019	11545 Green Acres Lane
Revised:	Sch. No. 5215000053
Drawn by: jhr	El Paso County, Colorado
Checked by: cam	

FIGURE 3
OWTS LOCATION

GEOQUEST, LLC
6825 Silver Ponds Heights #101
Colorado Springs, CO 80908
(719) 481-4560

PROFILE PIT EVALUATION

FOR

SEEGER HOMES

JOB #17-0660

11545 Green Acres Lane,
El Paso County,
Colorado

COLORADO REGISTERED
CHARLES E. MILLIGAN
34608
PROFESSIONAL ENGINEER

Respectfully submitted,

Charles E. Milligan, P.E.
Civil Engineer

PROFILE PIT FINDINGS

Enclosed are the results of the profile pit for the septic system to be installed at **11545 Green Acres Lane, El Paso County, Colorado.** The location of the test pit was determined by Seeger Homes. The residence will not be on a public water system. The number of bedrooms in the design for the residence is unknown. Due to the natural slope of the property, the entire system will feed to the south-southwest at approximately 6% at least 20 feet. All applicable portions of the El Paso County Health Department Onsite Wastewater Treatment System Regulations (OWTS) must be complied with for the installation of the treatment system.

The inspection was performed on July 21, 2017, in accordance with Table 10-1 of the **E.P.C.P.H. OWTS Regulations.**

Soil Profile #1:

0 to 6" - Topsoil- loam, organic composition.

6" to 28" - USDA soil texture sandy loam, soil type 2A, structure shape granular, structure grade 1, non-cemented, LTAR 0.50, light brown in color, 7.5YR 6/4.

28" to 6′ - USDA soil texture sandy loam, soil type 2A, structure shape none, structure grade massive, moderately cemented, LTAR 0.50, pinkish white in color, 7.5YR 8/2, Dawson sandstone, redoximorphic features at 28 inches.

Soil Profile #2:

0 to 6" - Topsoil- loam, organic composition.

6" to 16" - USDA soil texture sandy clay loam, soil type 3A, structure shape blocky, structure grade 1, non-cemented, LTAR 0.30, dark yellowish in color, 10YR 3/4.

16" to 40" - USDA soil texture sandy clay, soil type 4A, structure shape none, structure grade massive, moderately cemented, LTAR 0.15, light yellowish brown in color, 2.5YR 6/3, Dawson sandstone, redoximorphic features at 16 inches.

40" to 4′ - USDA soil texture sandy clay loam, soil type 3A, structure shape none, structure grade massive, moderately cemented, LTAR 0.30, pale brown in color, 2.5Y 7/4, Dawson sandstone.

Groundwater evidence was encountered at the depth of 28 inches in Profile Pit #1 and at 16 inches in Profile Pit #2 during the inspection. Bedrock was encountered at the depth of 28 inches in Profile Pit #1 and at 16 inches and 40 inches in Profile Pit #2 during the inspection. No known wells were observed within 100 feet of the proposed system. **All setbacks shall conform to county regulations.**

Due to encountering USDA soil type 3A, bedrock, and groundwater evidence, the septic system to be installed on this site shall be designed by a Colorado Licensed Engineer. Based on the observed conditions, we feel a design based on an LTAR of 0.30, GPD/SF (USDA 3A, treatment soil, treatment level 1) is reasonable. An above grade uniformly pressure dosed soil treatment area is required.

If during construction of the field itself, subsurface conditions change considerably or if the location of the proposed field changes, this office shall be notified to determine whether the conditions are adequate for the system as designed or whether a new system needs to be designed.

Weather conditions at the time of the test consisted of partly cloudy skies with hot temperatures.

PROFILE PIT LOG - Profile Pit #1

JOB#: 17-0660
DATE EVALUATED: 21 Jul 2017
EQUIPMENT USED: MINI-EXCAVATOR

0"-6" **TOPSOIL**
Loam
Organic Compoisition

6"- 28" **Sand**

Fine-coarse Grained	USDA Soil Texture: Sandy Loam
Low-moderate Density	USDA Soil Type: 2A
Moderate Moisture Content	USDA Structure Shape: Granular
Low-moderate Clay Content	USDA Structure Grade: 1
Low-moderate Cohesion	Cementation Class: Non-Cemented
Low-moderate Plasticity	Long Term Acceptance Rate (LTAR, Treatment Level 1): 0.50
Light Brown Color 7.5YR 6/4	

28"- 6' **Dawson Sandstone**

Fine-coarse Grained	USDA Soil Texture: Sandy Loam
Moderate-high Density	USDA Soil Type: 2A
Low-moderate Moisture Content	USDA Structure Shape: None
Low-moderate Clay Content	USDA Structure Grade: Massive
Low Cohesion	Cementation Class: Moderately
Low Plasticity	Long Term Acceptance Rate (LTAR, Treatment Level 1): 0.50
Pinkish White Color 7.5YR 8/2	Redox @ 28"

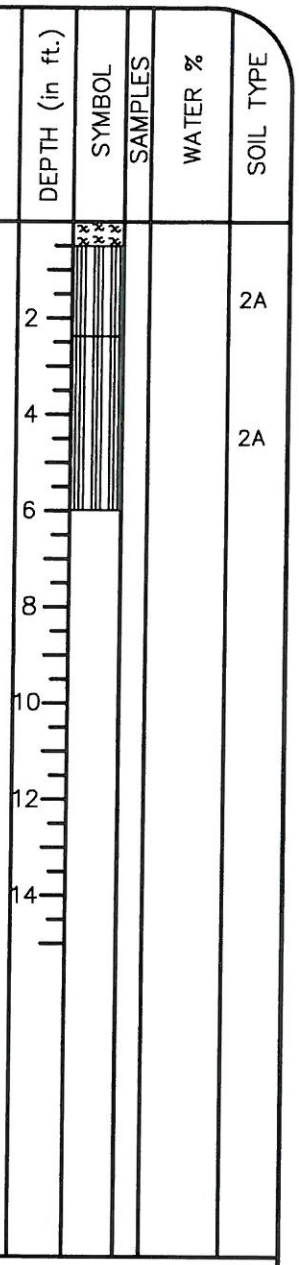

LTAR to be Used for OWTS Sizing: **0.30GPD/SF (USDA Type 3A, Treatment soil, Treatment Level 1)**
Depth to Groundwater (Permanent or Seasonal): Seasonal @ 28"
Depth to Bedrock and Type: Dawson Sandstone @ 28"
Depth to Proposed Infiltrative Surface from Ground Surface: Above Grade (Uniformly pressure dosed STA)
Soil Treatment Area Slope and Direction: SSW @ 6%

Note: See El Paso County Board of Health Regulation Chapter 8: On-Site Wastewater Treaments Systems (OWTS) Regulations for Additional Information. Refer to Table 10-1 for Corresponding LTAR if Treatment Level 2, 2N, 3, or 3N will be Implemented in the Design of the OWTS. System Sizing Depends on a Number of Factors (i.e. LTAR, # of Bedrooms, Type of Soil Treament Area (STA), Method of Transfer to the STA (Gravity, Dosed, or Pressure Dosed), and Type of Storage / Distribution Media Used in the STA)

Project: 17-0660	Project Name and Address
Sheet: 1 of 2	Seeger Homes
Date: 04 Aug 2017	11545 Green Acres Ln
	Sch. No. 5215000053
	El Paso County, Colorado
Scale: 1/4" = 1'	
Drawn by: mtj	
Checked by: cem	

GEOQUEST, LLC.
6825 SILVER PONDS HEIGHTS
SUITE 101
COLORADO SPRINGS, CO
80908

OFFICE: (719) 481-4560
FAX: (719) 481-9204

PROFILE PIT LOG - Profile Pit #2

JOB#: 17-0660
DATE EVALUATED: 21 Jul 2017
EQUIPMENT USED: MINI-EXCAVATOR

DEPTH (in ft.)	SYMBOL	SAMPLES	WATER %	SOIL TYPE

0"-6" **TOPSOIL**
Loam
Organic Compoisition

6"- 16" **Clayey Sand**

Fine-coarse Grained	USDA Soil Texture: Sandy Clay Loam
Moderate Density	USDA Soil Type: 3A
Moderate Moisture Content	USDA Structure Shape: Blocky
Moderate Clay Content	USDA Structure Grade: 1
Moderate Cohesion	Cementation Class: Non-Cemented
Moderate Plasticity	Long Term Acceptance Rate (LTAR, Treatment Level 1): 0.30
Dark Yellowish Brown Color 10YR 3/4	

16"- 40" **Dawson Sandstone**

Fine-medium Grained	USDA Soil Texture: Sandy Clay
High Density	USDA Soil Type: 4A
Moderate Moisture Content	USDA Structure Shape: None
Moderate-high Clay Content	USDA Structure Grade: Massive
Moderate-high Cohesion	Cementation Class: Moderately
Moderate-high Plasticity	Long Term Acceptance Rate (LTAR, Treatment Level 1): 0.15
Light Yellowish Brown Color 2.5YR 6/3	Redox @ 16"

40"- 4' **Dawson Sandstone**

Fine-coarse Grained	USDA Soil Texture: Sandy Clay Loam
Moderate-high Density	USDA Soil Type: 3A
Low-moderate Moisture Content	USDA Structure Shape: None
Moderate Clay Content	USDA Structure Grade: Massive
Moderate Cohesion	Cementation Class: Moderately
Moderate Plasticity	Long Term Acceptance Rate (LTAR, Treatment Level 1): 0.30
Pale Brown Color 2.5Y 7/4	

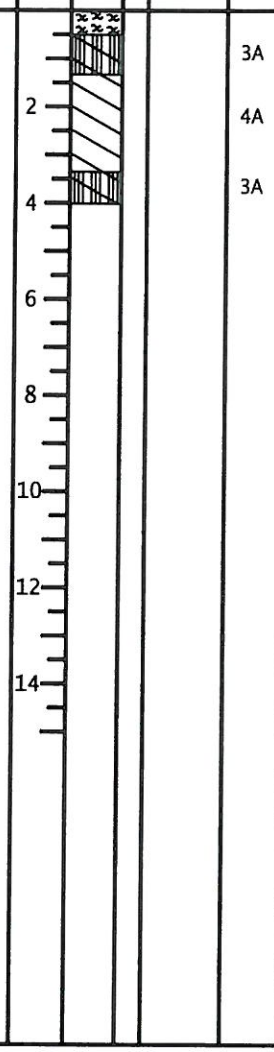

LTAR to be Used for OWTS Sizing: **0.30GPD/SF (USDA Type 3A, Treatment soil, Treatment Level 1)**
Depth to Groundwater (Permanent or Seasonal): Seasonal @ 16"
Depth to Bedrock and Type: Dawson Sandstone @ 16"
Depth to Proposed Infiltrative Surface from Ground Surface: Above Grade (Uniformly pressure dosed STA)
Soil Treatment Area Slope and Direction: SSW @ 6%

Note: See El Paso County Board of Health Regulation Chapter 8: On-Site Wastewater Treaments Systems (OWTS) Regulations for Additional Information. Refer to Table 10-1 for Corresponding LTAR if Treatment Level 2, 2N, 3, or 3N will be Implemented in the Design of the OWTS. System Sizing Depends on a Number of Factors (i.e. LTAR, # of Bedrooms, Type of Soil Treament Area (STA), Method of Transfer to the STA (Gravity, Dosed, or Pressure Dosed), and Type of Storage / Distribution Media Used in the STA)

Project: 17-0660	Project Name and Address
Sheet: 2 of 2	Seeger Homes
Date: 04 Aug 2017	
	11545 Green Acres Ln
	Sch. No. 5215000053
Scale: 1/4" = 1'	El Paso County, Colorado
Drawn by: mtj	
Checked by: cem	

GEOQUEST, LLC.
6825 SILVER PONDS HEIGHTS
SUITE 101
COLORADO SPRINGS, CO
80908

OFFICE: (719) 481-4560
FAX: (719) 481-9204

GEOQUEST LLC

SITE MAP

11545 Green Acres Ln
El Paso County,
Colorado,
Job #17-0660

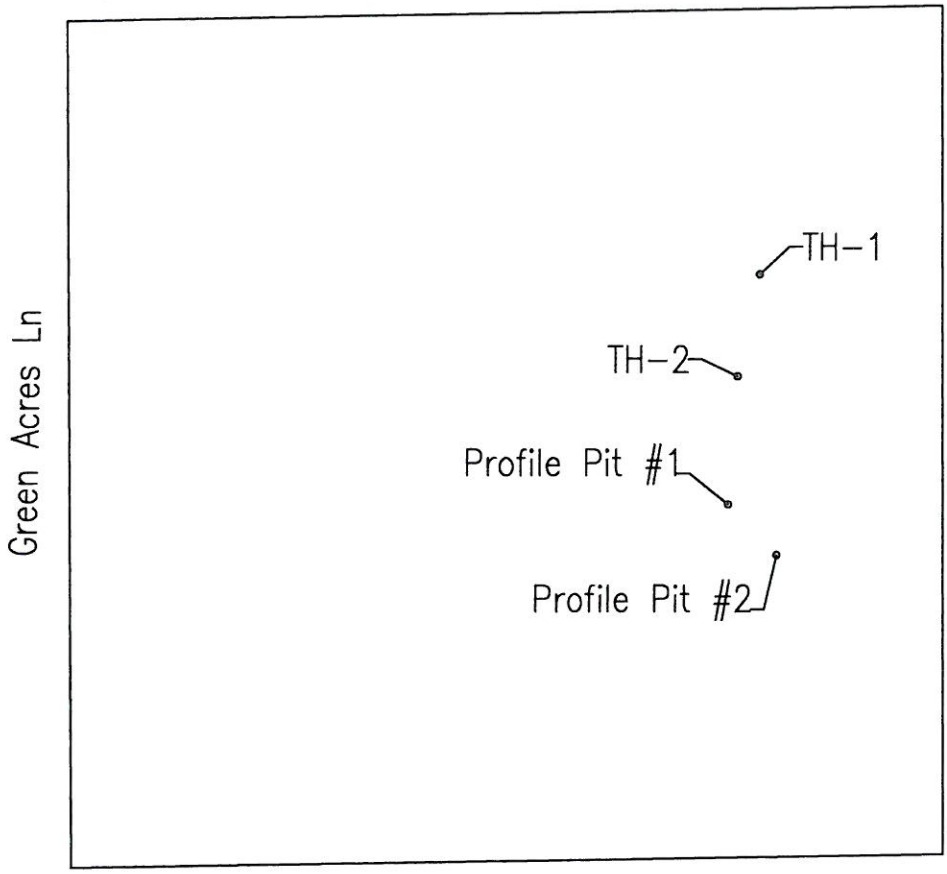

Location from Southwest Lot Corner to Profile Pit #1:
N. 61° E. – 577'
Location from Profile Pit #1 to Profile Plt #2:
S. 44° E. – 54'
GPS Coordinates:
Pit 1; N. 38° 59' 57.81" W. 104° 38' 42.62"
Pit 2; N. 38° 59' 57.56" W. 104° 39' 42.13"

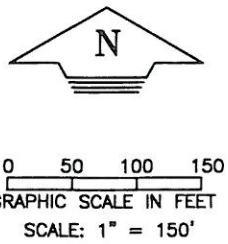

Cover Page

CALCULATIONS (New OWTS):
Proposed Single Family Residence with 4 Bedrooms

LTAR = 0.80 GPD/SF - Imported "Secondary" Sand Media
LTAR = 0.30 GPD/SF - USDA Soil Type 3A (TL1).
Linear Loading Rate = 5 GPD/LF - USDA Soil Type 3A
Bedrock Encountered at 28" & 40" Below Existing Grade.

Q = (3 BDRM)(150 GPD) + (1 BDRM)(75 GPD)
Q = 525.0 Gallons per Day (GPD)
Adjustment Factor for Chambers = 0.7
Q = (525.0)(1.0)(0.7) = 367.5 GPD

$A = \frac{Q}{LTAR} = \frac{367.5\ GPD}{0.80\ GPD/SF}$ = 459.4 SF - Distribution Area

$A = \frac{Q}{LTAR} = \frac{367.5\ GPD}{0.30\ GPD/SF}$ = 1225.0 SF - Basal Area

Distribution Area: Chamber Bed System (Uniformly Pressure Dosed):
A (Min) = 459.4 SF
Infiltrator Systems Inc. Quick 4 Plus Low Profile Chambers
Chambers = SF RQD / 12.0 SF per Chamber
Chambers = 459.4 SF / 12.0 SF = Min. 39 Chambers
Install 1 Zone: 2 Rows x 20 Chambers Long
Chambers Provided = 40 Total
Total Contact Area Actual = 480.0 SF
Total Contact Area Required = 459.4 SF
Note: Use of Alternative Chambers is Acceptable.
For ARC 36 Low-Profile Chambers (15.0 SF / Chamber). Install 1 Zone with 2 Rows of 16 Chambers (32 Total). 480.0 SF Provided. Contact Engineer for Clarification.

Basal Area: Sand Media
A (Min) = 1,225.0 SF
Distribution Length = 80 FT
Distribution Width = 6 FT
Downslope Width = 19 FT
Upslope Width = 8 FT
End Slope Length = 12 FT

Top of Sand Length = 82 FT
Top of Sand Width = 8 FT
Bottom of Sand Length = 106 FT
Bottom of Sand Width = 35 FT

Treatment Length = 80 FT (Length of Distribution)
Treatment Width = 25 FT (Width of Distribution + Downslope)

A (Actual) = (Length) X (Width) - Treatment Dimensions
A (Actual) = (80 FT) X (25 FT)
A (Actual) = 2,000.0 SF

Tank Sizes:
Main Tank Size = New 1,250 Gallons (Two-Compartment)
Pump Chamber = New 500 Gallons (One-Compartment)

INSPECTIONS REQUIRED ARE AS FOLLOWS:
1.) Engineer to Inspect Excavation Prior to Placement of Approved Sand Fill.
2.) Engineer Will Inspect the Installation of All OWTS Components (i.e. All Plumbing, Tanks, Pump Chamber, STA, etc.) Prior to Backfill.
3.) Engineer to Inspect the Soil Treatment Area After Backfill to Insure Min. Cover and Proper Drainage Away from Soil Treatment Area.
Please Notify this Office Min. 24 Hours Prior to Inspection.

IMPORTED SAND SPECIFICATION (See Page 3 and 4):
Sand for Soil Treatment Area Absorption Bed to be Imported

"Preferred" Sand Media:
Effective Size (D10) = 0.25-0.60 mm
Coefficient of Uniformity, Cu (D60/D10) $\leq$ 4.0
Note: 100% Passing #4 Sieve
Less Than 3% Passing #200 Sieve

"Secondary" Sand Media:
Effective Size (D10) = 0.15-0.60 mm
Coefficient of Uniformity, Cu (D60/D10) $\leq$ 7.0
Note: 100% Passing #4 Sieve
Less Than 3% Passing #200 Sieve

Note: ASTM C-33 w/ Less Than 3% Fines Generally Meets "Secondary" Sand Media Requirements. Gradation Curve of the Sand Media Used MUST be Provided to Engineer Prior to to Installation. Gradation Must be Dated No More Than One Month Prior to Installation Date.

HOMEOWNER RESPONSIBILITY:
- Maintain Active Service Contract w/ Licensed Operation & Maintenance Contractor per EPCHD Regulations
- Have OWTS Inspected Annually (Service Contract)
  - -Clean Effluent Filter
  - -Flush Laterals
  - -Function Test Valve Assemblies
  - -Check Water Levels in Inspection Ports
- Have Septic Tank Pump Every 3-5 Years (or As Needed, Contact Licensed Pumper)
- Plant Native Grass Over STA (No Plants with Roots or that Require Irrigation)
- Don't Pour Chemicals Down Drain
- Don't Throw Trash in Toilet (Minimize Toilet Paper Consumption)
- Use of Garbage Disposal is Discouraged
- Conserve Water and Repair Leaking Fixtures

This is NOT a Complete List (Contact Local Health Department and EPA List of Septic "Do's and Don'ts"

GENERAL NOTES:
All Work per El Paso County Board of Health Regulations Chapter 8: On-Site Wastewater Treatment Systems (OWTS) Criteria.

All Setbacks Shall Conform to El Paso County Regulations (See Table 7-1 in the Regulations for Additional Information). Contractor/Homeowner Must Verify All Setbacks and Obtain Utility Clearances Prior to Construction.

Contractor/Homeowner is Responsible for Permit. Contractor/Homeowner Must Obtain Approval of Engineered OWTS from the El Paso County Health Department.

All Bends Limited to 45 Degree Ells or Long Sweep Quarter Bends. Areas Under Driveways Shall Be Protected as Per El Paso County Health Department Regulations.

Building Sewer Clean-Outs Shall Be Installed within 5 FT of the Structure and at Intervals Not to Exceed 100 FT in Straight Runs, Upstream at Each Change of Direction Greater Than 45°, and at Any Combination of Bends Greater Than 45° within a 40 FT Section of Building Sewer.

Grade Surrounding Area to Drain Away from the Soil Treatment Area (STA).

Paving, Planting of Trees/Shrubs, Irrigation, Vehicular Traffic or Hoofed Animal Traffic of Any Kind Over the STA may Cause Premature Failure and is Prohibited.

Refer to Sheet 2, 3, 4, and 5 for Additional Details and Information.

GEOQUEST, LLC.
6825 SILVER PONDS HEIGHTS
SUITE 101
COLORADO SPRINGS, CO
80908

OFFICE: (719) 481-4560
FAX: (719) 481-9204

COLORADO LICENSED
DOUGLAS J PREETZER
55147
1 April 19
PROFESSIONAL ENGINEER

Project: 17-0660	Project Name and Address
Sheet: 1 of 5	Michelle Colvin
Date: 26 March 2019	11545 Green Acres Lane
Revised:	Sch. No. 5215000053
Drawn by: jhr	El Paso County, Colorado
Checked by: cem	

Geoquest, LLC. has Provided this Design in Accordance with the Standards of Practice Common to the Area. However, as with All Underground Absorption Fields, Guarantee from Failure is Impossible. Even with Proper Installation, as Outlined for this Proposed Construction, There Can Remain Many Uncertainties, and Difficulties Can Still Arise in the Operation of the System in the Future. Proper Design, Construction, and Maintenance can Assist in Minimizing Uncertainties, but Cannot Entirely Eliminate Them. Homeowners Should be Advised of Maintenance and Special Considerations for Septic Systems. Refer to El Paso County Public Health Brochure: "Maintaining Your Septic System" for Additional Information. Due to the Possibility of Unknown Water Usage Factors, Geoquest, LLC. Provides No Warranty of this Design or Installation Against Failure or Damage of Any Type.

Distribution Area: Chamber Bed System (Uniformly Pressure Dosed):

A (Min) = 459.4 SF
Infiltrator Systems Inc. Quick 4 Plus Low Profile Chambers
Chambers = SF RQD / 12.0 SF per Chamber
Chambers = 459.4 SF / 12.0 SF = Min. 39 Chambers
Install 1 Zone: 2 Rows x 20 Chambers Long
Chambers Provided = 40 Total
Total Contact Area Actual = 480.0 SF
Total Contact Area Required = 459.4 SF
Note: Use of Alternative Chambers is Acceptable.
For ARC 36 Low-Profile Chambers (15.0 SF / Chamber). Install 1 Zone with 2 Rows of 16 Chambers (32 Total). 480.0 SF Provided. Contact Engineer for Clarification.

4" Ø PVC Solid Pipe from House to Septic Tank, Install a Cleanout within 5 FT of House and at Intervals Not to Exceed 100 FT in Straight Runs, Upstream at Each Change of Direction Greater Than 45°, and at Any Combination of Bends Greater Than 45° within a 40 FT Section of Building Sewer. Maintain 2.0% Min. Grade on Pipe Feeding the Septic Tank. Exact Location of the Discharge Line from the House per Plumbing Design by Others.

Minor Rotation or Curvature (ie. Less Than 15°) of the Soil Treatment Area (STA) Beds to Best Fit the Site Topography is Acceptable (i.e. Parallel to Site Contours). STA shall Maintain the Approximate Orientation Shown w/ Respect to Buildings and Lot Lines. Contact Engineer for Clarification.

Install Drainage Swale on All Uphill Sides to Ensure Surface Runoff is Diverted Around the STA. Downspouts near the STA Shall Discharge into the Swale or Extended Beyond the STA.

Min. 500 Gal. Precast Concrete Pump Chamber per County Health Department Regulations (Use of Two Compartment 1,000 Gal. Septic Tank w/ Pump in Second Compartment is an Acceptable Alternative for the Pump Chamber. See Pump Chamber Detail on Page 5 for Additional Information). Pump Chamber Inlet Approx. 30" Below Existing Grade. Risers to Grade with Secure Access Cover (Min. 3" Above Finish Grade, Water Tight, Typ. All Septic Tank Access Locations). Exact Location to be Field Determined.

Quick4 Plus Low Profile Chamber Modulus
34" W x 48" L x 8" H Each (Typ.)
1 Zones: 2 Rows of 20 Chambers (40 Total). See STA Layout and Cross-Section for Additional Detail and Clarification. Full Length 1-1/2" Ø Sch. 40 PVC Pipe Suspended from the Top of Chambers per Manufacturers Recommendations (Typ. Each Lateral); Drill 1/8" Ø Holes @ 36" O.C. (Top of Pipe Typ. and Every Third on Bottom).

4" Ø Inspection Port / Vent (Typ. of 4). See Detail on Page 3 for Additional Information.

Flushing Valve (Typ. of 4). See Detail on Page 3 for Additional Information.

Existing Single Family Residence (4 BDRMs)

Proposed Well Min. 100 FT from Well to STA. Min 50 FT from Well to Septic Tanks. Field Verify Location.

New 1,250 Gal. Precast Concrete Two Compartment Septic Tank. Install EPCPH Approved Effluent Filter (Requires Regular Maintenance) on Outlet. Install Risers to Grade with Secure Access Cover (Min. 3" Above Finish Grade, Water Tight, Typ. All Septic Tank Access Locations). Exact Location to be Field Verified.

1-1/2" Ø PVC Pipe from Pump Chamber to Level Zone Manifold. Install Vacuum Breaker at Highest Point. Slope the Line Back to the Pump Chamber (0.5% Min.).

Bottom of Sand Dimension: 35'x106'.
See Page 3 and 4 for Additional Information Related to Sand Dimensions. Min. 10 FT from Property Lines.

Native Slope: SW @ ~11%

Burgess Rd mislabeled here

Primary Alternate Soil Treatment Area (STA) Location. Alternate STA Location Must be Protected and Preserved for Future STA Use.

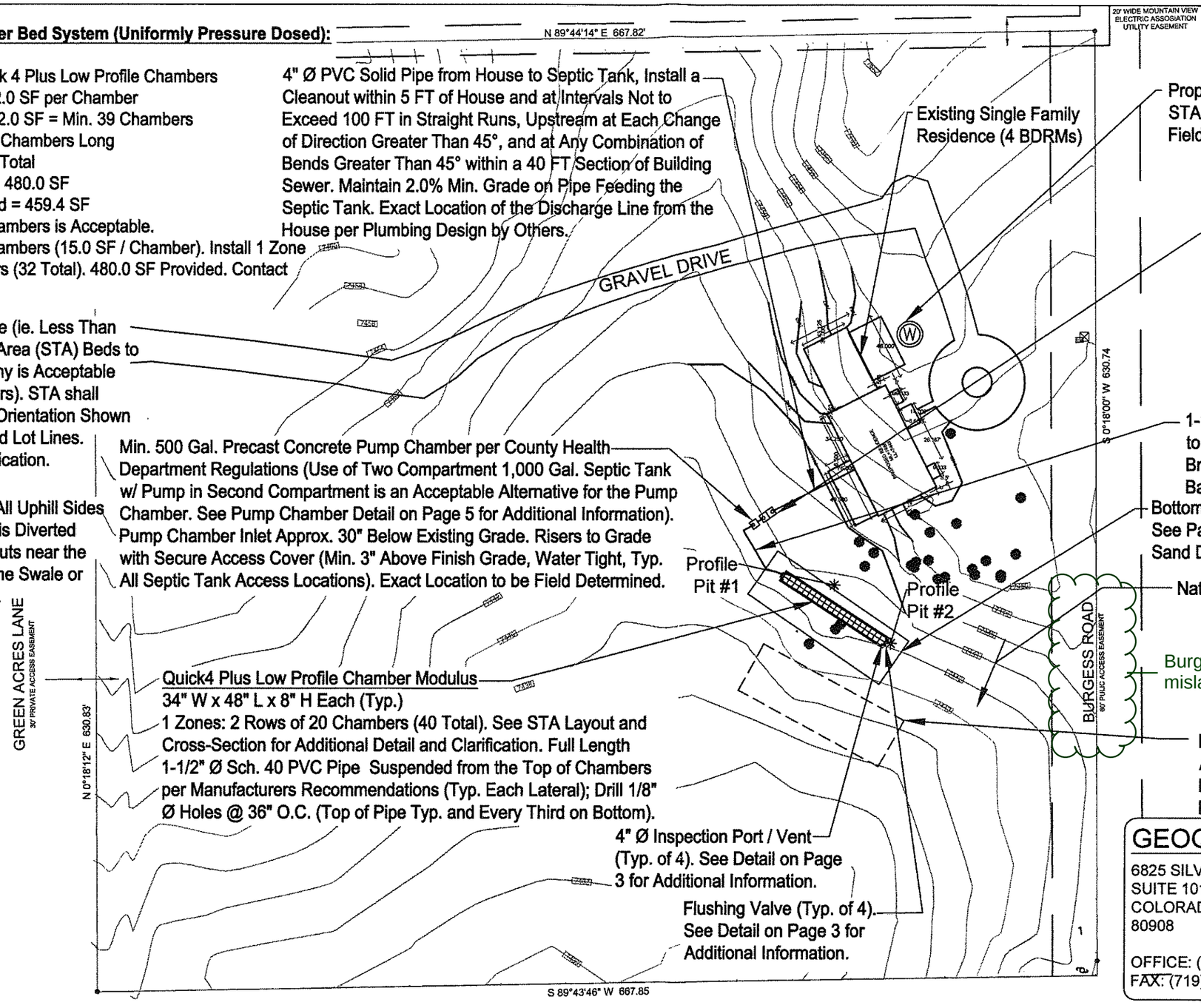

*Indicates Geoquest, LLC. Profile Pit Test Locations
Location from Southeast Lot Corner to Profile Pit #1: N. 61° E. - 577'
Location from Profile Pit #1 to Profile Pit #2: S. 44° E. - 54'
GPS Coordinates Profile Pit #1: N. 38° 59' 57.81" , W. 104° 38' 42.62"
GPS Coordinates Profile Pit #2: N. 38° 59' 57.56" , W. 104° 39' 42.13"

Site Plan

N
0 25 50 75
GRAPHIC SCALE IN FEET
SCALE: 1" = 75'

GEOQUEST, LLC.
6825 SILVER PONDS HEIGHTS
SUITE 101
COLORADO SPRINGS, CO
80908

OFFICE: (719) 481-4560
FAX: (719) 481-9204

COLORADO LICENSED
DOUGLAS J PRETZER
55147
1 April 19
PROFESSIONAL ENGINEER

Project: 17-0660	Project Name and Address
Sheet: 2 of 5	Michelle Colvin
Date: 26 March 2019	11545 Green Acres Lane
Revised:	Sch. No. 5215000053
Drawn by: jhr	El Paso County, Colorado
Checked by: cem	

All Measurement are Horizontal. Not Measured Parallel to the Slope.

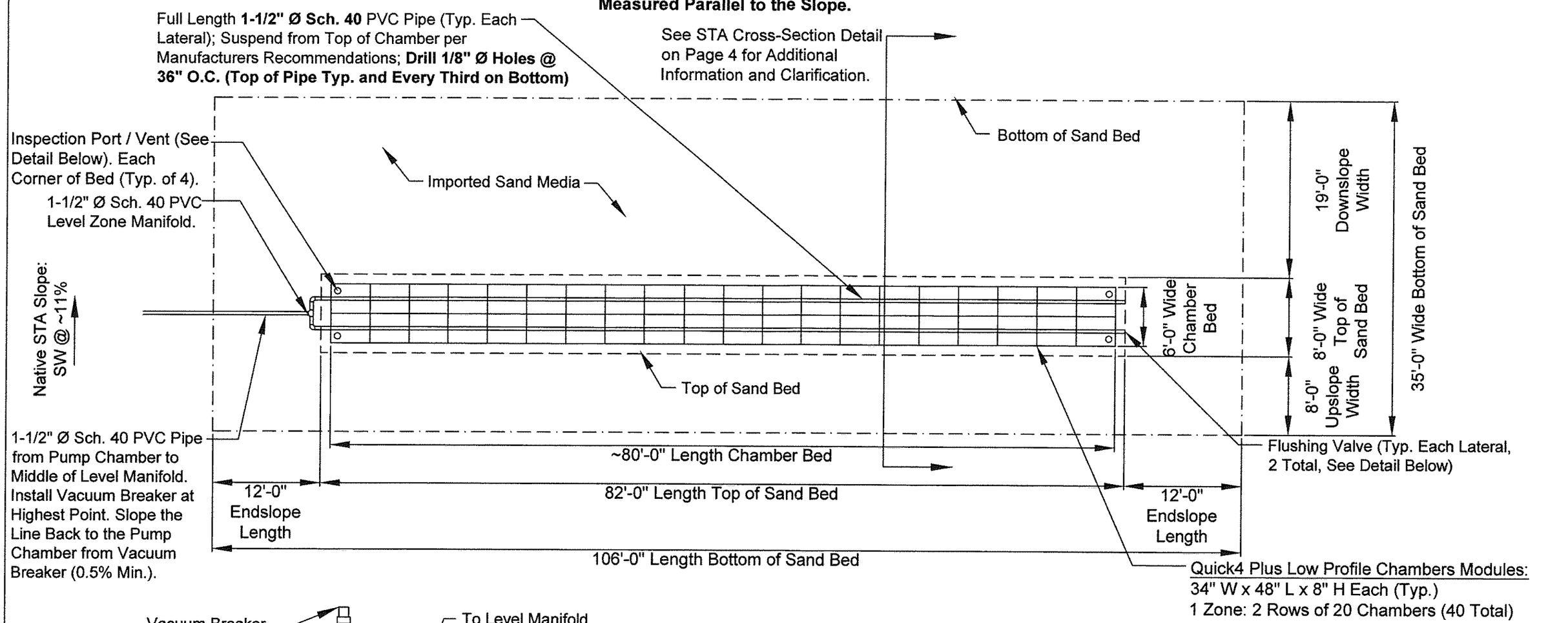

Soil Treatment Area (STA) Layout (Uniformly Pressure Dosed Chamber Beds)

SCALE: 1" = 10'

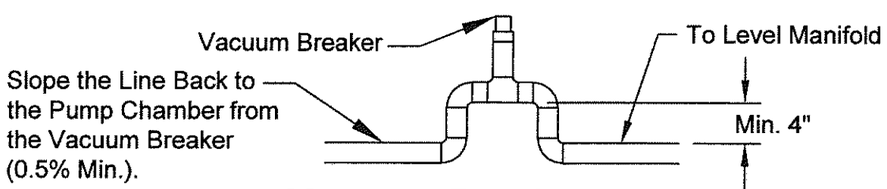

Vacuum Breaker Detail

Not to Scale

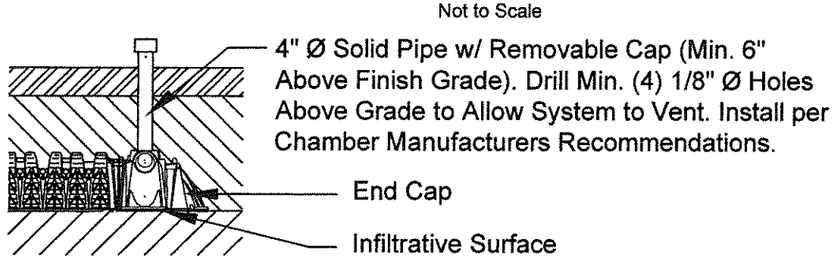

Inspection Port / Vent Detail

Not to Scale

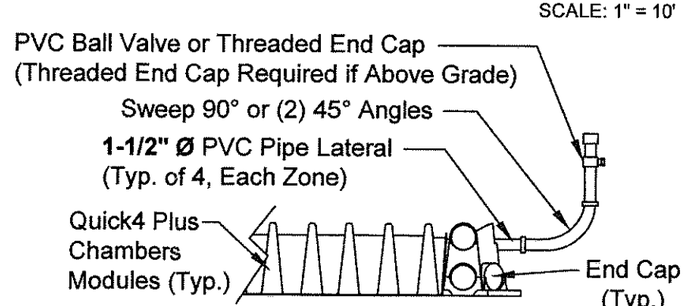

Min. 6" Above Finish Grade or May be Placed in Small Valve Box if Desired. This Will Provide Access to Flush Each Lateral, Allowing for Removal of the Build-Up of Organics (System Maintenance).

Flushing Valve Detail

Not to Scale

GEOQUEST, LLC.
6825 SILVER PONDS HEIGHTS
SUITE 101
COLORADO SPRINGS, CO
80908

OFFICE: (719) 481-4560
FAX: (719) 481-9204

COLORADO LICENSED DOUGLAS J PRETZER 55147 1 April 19 PROFESSIONAL ENGINEER

Project: 17-0660	Project Name and Address
Sheet: 3 of 5	Michelle Colvin 11545 Green Acres Lane Sch. No. 5215000053 El Paso County, Colorado
Date: 26 March 2019	
Revised:	
Drawn by: jhr	
Checked by: cem	

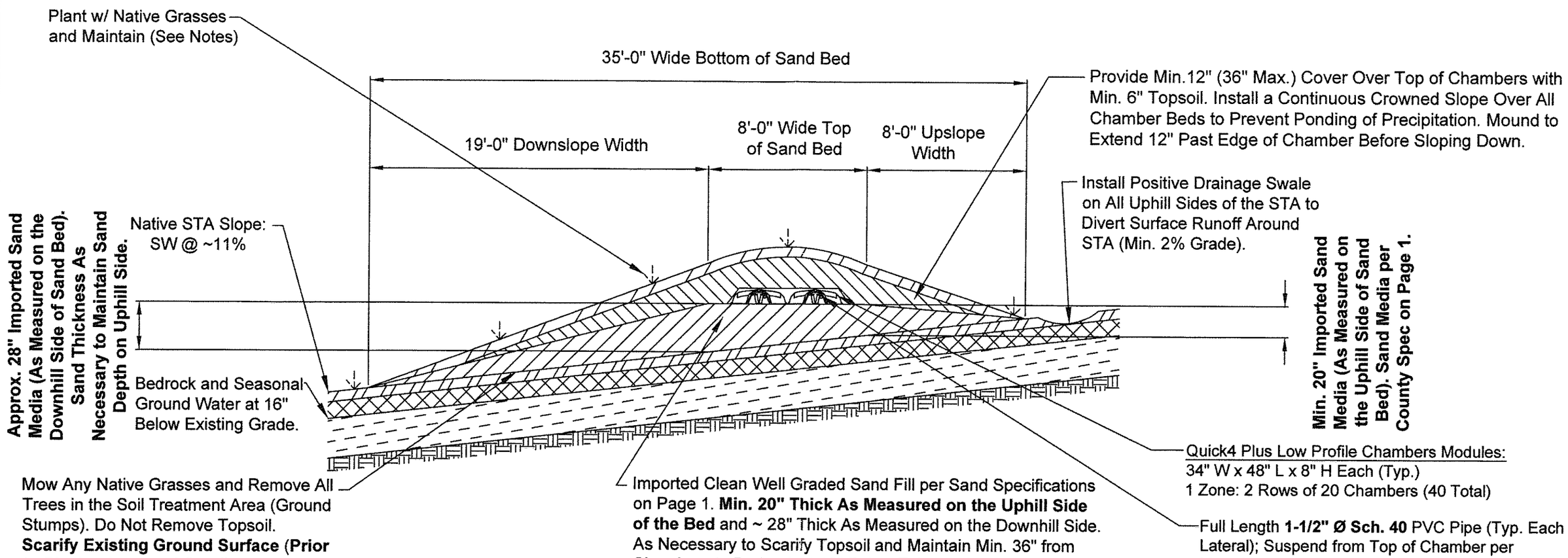

Topsoil (Min. 6" on Final Cover).
Native Topsoil (Approx. 6")

Approved Granular Material to Provide Cover (Min. 12", Max. 36" Total, Including Topsoil)

Native Soil - Sandy Clay Loam (USDA 3A, Approx. 6" - 16" Below Existing Grade)

Bedrock - Sandy Clay (USDA 4A, Approx. 16" - 40" Below Existing Grade)

Bedrock - Sandy Clay Loam (USDA 3A, Approx. 40" - 4' Below Existing Grade)

Imported Clean Well Graded Sand Fill Under Chamber Bed per EPCHD Specifications Page 1 (**Min. 20"**) As Necessary to Maintain Min. 36" to Bedrock at 16" Below Grade.

Soil Treatment Area (STA) Cross Section (Uniformly Pressure Dosed Chamber Beds)

NOTES: Not to Scale

All Work per El Paso County Board of Health Regulations Chapter 8: On-Site Wastewater Treatment Systems (OWTS) Criteria.

Contact Soil Conservation Service or County Extension Agent for Vegetation Best Suited for the Area. Grasses are Best. Trees and Shrubs May Damage/Block Pipes. Vegetation Shall Be Maintained and Mowed to Prevent Formation of Bio-Matting. Do Not Pave Over the Soil Treatment Area.

GEOQUEST, LLC.
6825 SILVER PONDS HEIGHTS
SUITE 101
COLORADO SPRINGS, CO
80908

OFFICE: (719) 481-4560
FAX: (719) 481-9204

COLORADO LICENSED
DOUGLAS J PRETZER
55147
1 April 19
PROFESSIONAL ENGINEER

Project: 17-0660	Project Name and Address
Sheet: 4 of 5	Michelle Colvin 11545 Green Acres Lane Sch. No. 5215000053 El Paso County, Colorado
Date: 26 March 2019	
Revised:	
Drawn by: jhr	
Checked by: cem	

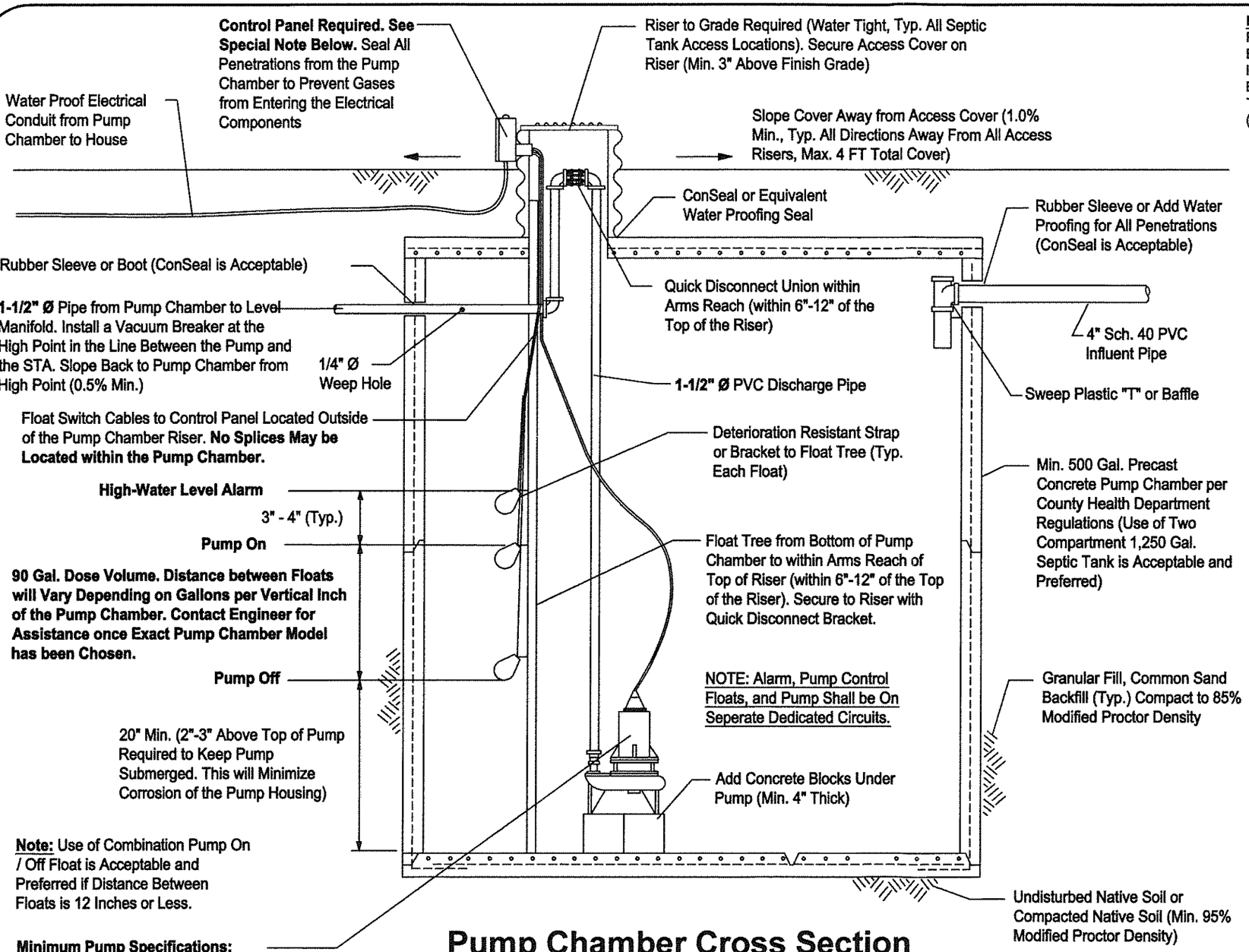

Note: Use of Combination Pump On / Off Float is Acceptable and Preferred if Distance Between Floats is 12 Inches or Less.

Minimum Pump Specifications:
Pump: Use Zoeller "Dose-Mate" 152, Orenco PF3005, or Approved Equivalent Effluent Pump Prior to Installation (May be Revised Once System has Been Plumbed and Exact Site Conditions are Verified)
Design Flow Rate = Min. 23.5 GPM
Total Dynamic Head (TDH) = Approx. 21.5 ft
Operating (Residual) Head = 5 FT
Dose Volume = 90 Gallon

Pump Chamber Cross Section

Not to Scale

Special Note: Per El Paso County Board of Health Regulations Chapter 8: On-Site Wastewater Treatment Systems (OWTS) Criteria, the Pump System Shall have a Mechanism for Tracking Both the Amount of Time the Pump Runs (Pump Run Counter) and the Number of Cycles the Pump Operates (Event Counter). A Manual Pump Run Switch is Required. A Control Panel is the Most Common Device to Fulfill these Requirements (as well as the Alarm System).

We Recommend the use of the Orenco MVP, Aquaworkx IPC, SJE-Rhombus or Approved Equivalent Control Panel Equipped with a Manual Pump Run Switch, Pump Run Counter, and Event Counter. Engineer to Approve Prior to Installation.

Electrical Code Requirements: All Electrical Work, Equipment, and Material Shall Comply with the Requirements of the Currently Applicable National Electrical Code as Designated by the State Electrical Board Rules and Regulations (3 CCR 710-1) on the Date of the Permit. The Electrical Installer Shall Contact the Electrical Inspector for the Location where the OWTS is Constructed. All Electrical Components Shall be Protected from Moisture and Corrosive Gases. Special Care Shall be Taken to Ensure the Electrical Requirements of Each Component Meet Manufacturer Specifications (i.e. Voltage and Amperage).

1. All Wire Splices Shall be Enclosed in the Control Panel. The Control Panel Shall be Placed in an Accessible Location Positioned Outside of the Tank Riser.
2. All Wires Shall be Spliced with Corrosion-Resistant, Watertight Connectors. **NO WIRE SPLICES ARE ALLOWED WITHIN THE PUMP CHAMBER OR RISER.**
3. Conduits Shall be Sealed to Prevent Gases from Entering the Control Panel and Electrical panel.
4. A Means to Disconnect the House Power Supply to OWTS Components Shall be Provided at the Control Panel.
5. The Branch Circuit Wire from the Building to the Control Panel Shall be a Minimum of 24" Below the Ground Surface. Lines Buried Less than 24" are Allowed, but Will be Required to be in Conduit or have Ground Fault Protection on the Circuit. Conduit from the Control Panel to the House is Strongly Recommended for All Wiring.
6. Conduit Risers for Physical Protection Must Extend Min. 18" Below Finish Grade.

Best Practices Guidelines: The Following "Best Practices" are Intended to Facilitate Maintenance and Servicing of the Electrical Components Associated with Lift Stations, Dosing Systems, and Treatment Units that are Part of an OWTS.

1. The "Quick Disconnect" for the Pump Discharge pipe (i.e. Union) Shall be Located within 6"-12" of the Top of the Riser(s). Electrical Lines at the Septic Tank, Dosing Tank, or Treatment Unit Must be Placed in such a Manner as to Protect them from Damage During Backfill. Conduit from the Control Panel to the House is Strongly Recommended for All Wiring.
2. The Floats Shall be Secured to a Separate Float Tree with Approved Connecting Straps or Brackets that will Remain Secure Underwater and Not Deteriorate. Electrical Tape is Not Acceptable. Top of Float Tree to be within 6" - 12" of the Top of the Riser.
3. The Risers Shall be Secured to the Tank to Maintain the Riser in an Upright and Plumb Position. Special Care Shall be Taken During Backfill to Ensure Riser Maintains Upright and Plumb Position.
4. Control Panel Shall be Placed within "Line of Sight" of the Pump.
5. The Alarm, Pump Control Floats, and Pump Shall be Placed on a Separate Dedicated Circuits

GEOQUEST, LLC.
6825 SILVER PONDS HEIGHTS
SUITE 101
COLORADO SPRINGS, CO
80908

OFFICE: (719) 481-4560
FAX: (719) 481-9204

COLORADO LICENSED
DOUGLAS J PREYZER
55147
1 April 19
PROFESSIONAL ENGINEER

Project: 17-0660	Project Name and Address
Sheet: 5 of 5	Michelle Colvin
Date: 26 March 2019	11545 Green Acres Lane
Revised:	Sch. No. 5215000053
Drawn by: jhr	El Paso County, Colorado
Checked by: cem	