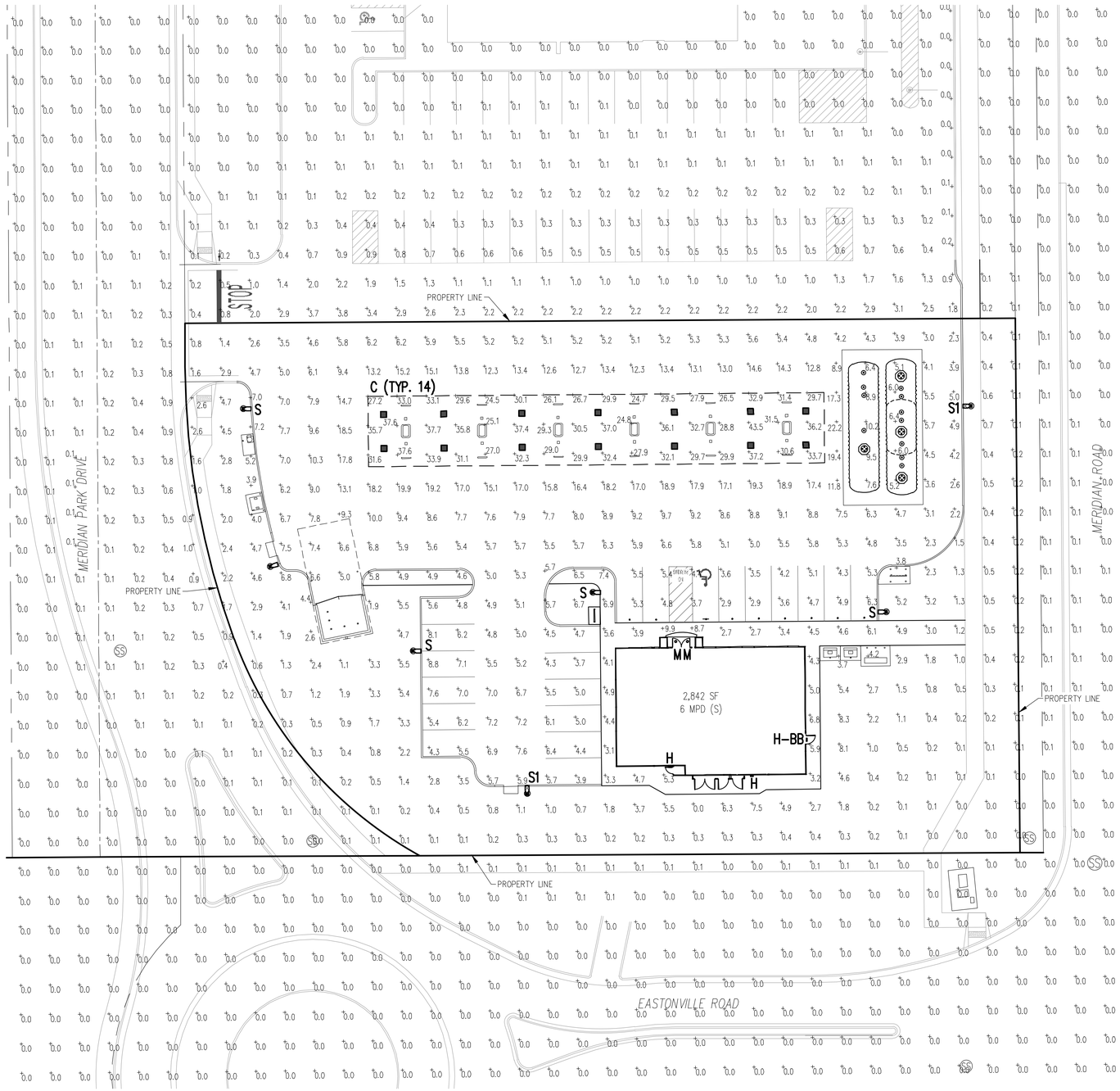

1 PHOTOMETRIC SITE PLAN

SCALE: 1"=20'-0"

N

0 10 20

SCALE: 1"=20'

CONTRACTOR TO ENSURE THE LIGHT POLE AND HANDICAP PARKING SIGN ARE AT LEAST 2' FROM THE BACK OF CURB TO PREVENT VEHICLES FROM STRIKING THE LIGHT POLE OR HANDICAP PARKING SIGN. PROPOSED LIGHT POLE BASES SHOWN AT A MINIMUM OF 2'-6" FROM BACK OF CURB TO CENTER OF POLE/BASE. ENGINEER TO VERIFY PROPOSED LOCATIONS FOR ANY CONFLICTS OR MISPLACEMENTS. REPORT TO LIGHTING DESIGNER ANY DISCREPANCIES OR CONFLICTS

CALCULATION SUMMARY

LABEL	UNITS	AVG	MAX	MIN	AVG/MIN	MAX/MIN
CANOPY	FC	31.42	43.5	24.5	1.28 to 1	1.78 to 1
CANOPY INFLUENCE AREA	FC	13.46	22.2	7.5	1.79 to 1	2.96 to 1
PARKING	FC	5.36	8.8	2.9	1.85 to 1	3.03 to 1
DRIVES	FC	5.57	10.3	1.4	3.98 to 1	7.36 to 1
LIFE SAFETY PATH	FC	4.84	9.9	1.2	4.03 to 1	8.25 to 1

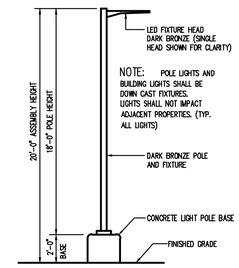

2 AREA LIGHT DETAIL

SCALE: NOT TO SCALE

POLE SCHEDULE

MOUNTING CONFIG	SYMBOL	QTY	POLE HEIGHT	MODEL NUMBER	DESCRIPTION
S & S1		3	18'-0"	4SQB3-S11G-18-S-BRZ-4BC	LSI LIGHTING, STEEL SQUARE POLE, BOLT-ON ARM MOUNT, BRONZE

NOTES: ALL AREA SITE LIGHT FIXTURES AND POLES TO BE MOUNTED ON CONCRETE BASE PER DETAIL, THIS SHEET
POLES RATED TO 130 MPH WIND VELOCITY

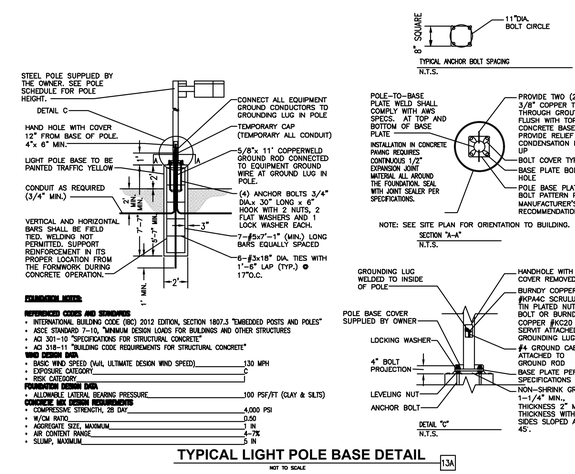

TYPICAL LIGHT POLE BASE DETAIL 13A

NOT TO SCALE

LUMINAIRE SCHEDULE

MOUNTING CONFIG	SYMBOL	QTY	ASSEMBLY HEIGHT	POLE HEIGHT	LUMENS	TOTAL WATTS	MODEL NUMBER	DESCRIPTION
S		5	20'-0"	18'-0"	18904	135	SLM-18L-SIL-FT-UNV-50-70-BRZ	LSI LIGHTING, SLICE MEDIUM LED SERIES AREA LIGHT, 18,000 LUMENS PACKAGE, 5000K 70 CRI, SINGLE HEAD FLAT LENS FIXTURE, FORWARD THROW
S1		2	20'-0"	18'-0"	18904	135	SLM-18L-SIL-FT-UNV-50-70-BRZ-IL	LSI LIGHTING, SLICE MEDIUM LED SERIES AREA LIGHT, 18,000 LUMENS PACKAGE, 5000K 70 CRI, SINGLE HEAD FLAT LENS FIXTURE, FORWARD THROW WITH INTERNAL LOUVER
C		14	15'-0"	N/A	19071	125	CRUS-SC-LED-HO-50-UE-WHT	LSI LIGHTING, LEGACY SERIES, HIGH OUTPUT DRIVER, FLAT LENS CANOPY FIXTURE
H H-BB		2 1	8'-3"	N/A	4124	30	XWM 3 LED 04L 50 UE BRZ XWM 3 LED 04L 50 UE BRZ CWBB	LSI LIGHTING, MIRADA (XWM) WALL MOUNT LUMINAIRE, 5000k CCT, 4000 LUMEN PACKAGE, BRONZE COLOR, H-BB WITH BATTERY BACK-UP
M		2	8'-8"	N/A	2333	22	LCD6LED25LUNVDIM135WF TR6RWWHAZ EM	LSI LIGHTING, LCD6 DOWN LIGHT LUMINAIRE, 3500k CCT, 2500 LUMENS, WIDE FLOOD HAZE SEMI-DIFFUSED WALL WASH REFLECTOR, WHITE OR EQUIVALENT

NOTES: ALL AREA SITE LIGHT FIXTURES AND POLES TO BE MOUNTED ON CONCRETE BASE PER DETAIL, THIS SHEET
ALL ANCHOR BOLTS TO BE ORIENTED IN THE SAME DIRECTION (SQUARE) AT INSTALLATION PER MANUFACTURER'S SPECIFICATIONS.
ALL PROPOSED FIXTURES ARE FULL CUT-OFF FIXTURES

PLANNING AND COMMUNITY DEVELOPMENT DIRECTOR:

Galloway
1155 Kelly Johnson Blvd., Suite 305
Colorado Springs, CO 80920
719.900.7220
GallowayUS.com

PRELIMINARY
NOT FOR BIDDING
NOT FOR CONSTRUCTION

COPYRIGHT
THESE PLANS ARE AN INSTRUMENT OF SERVICE AND ARE THE PROPERTY OF GALLOWAY, AND MAY NOT BE DUPLICATED, DISCLOSED, OR REPRODUCED WITHOUT THE WRITTEN CONSENT OF GALLOWAY. COPYRIGHTS AND INFRINGEMENTS WILL BE ENFORCED AND PROSECUTED.

MURPHY OIL USA, INC.
MURPHY USA
200 PEACH STREET
EL DORADO, AR 71730

SITE DEVELOPMENT PLAN
MURPHY OIL USA #7968

XXXX MERIDIAN PARK DRIVE
EL PASO COUNTY, COLORADO

#	Date	Issue / Description	Init.

Project No:	Moc901028
Drawn By:	JMG
Checked By:	JMG
Date:	02/09/2024

PHOTOMETRIC SITE PLAN

L1.0

Sheet 1 of 2

Catalog #: Project:
Prepared By: Date: Type: CAN

Scottsdale® Legacy (CRUS)

LED Canopy Luminaire

IP66

OVERVIEW	
Lumen Package	5,000 - 22,000
Wattage Range	38 - 152
Efficacy Range (LPW)	114 -156
Weight lbs(kg)	23 (10.4)

QUICK LINKS

Ordering Guide | Performance | Photometrics | Dimensions

FEATURES & SPECIFICATIONS

Construction
- Features a ultra-slim 11/16" profile die-cast housing, with flat clear or diffused tempered glass lens. Unit is water-resistant, sealed and IP66 rated. Integral designed heat sink does not trap dirt and grime, ensuring cool running performance over the life of the fixture.
- Standard color is white and is finished with LSI's DuraGrip® polyester powder coat process. DuraGrip withstands extreme weather changes without cracking or peeling.
- Luminaire assembly incorporates a pressure stabilizing vent breather to prevent seal fatigue and failure.

Optical System
- Features an array of select, mid-power, high brightness, high efficiency LED; 3000K, 4000K, 5000K color temperature, 80 CRI (nominal).
- Choice of Symmetric or Asymmetric distribution. Asymmetric provides a wider distribution pattern. Optional symmetric with diffused lens also available.
- Forward Throw distribution provides an industry leading unique distribution pattern that illuminates the area under the gas canopy and beyond. The forward through optic directs the light to the forecourt from the gas canopy eliminating the need for supplemental floodlights and extensive perimeter lighting.
- Diffuse lens available as an option to soften brightness of the luminaire.
- Six Lumen Packages: 5,000, 9,000, 10,000, 13,000, 18,000 and 22,000 Lumens.

Electrical
- High performance factory programmable driver features over-voltage, under voltage, short-circuit and over temperature protection with integral 6kV surge protection that meets IEEE C62.41.2 and ANSI C82.77-5 Location Category C Low standards. Additional field replaceable 10kV surge protection device meets a minimum Category C Low operation (per ANSI/IEEE C62.41.2). Custom lumen and wattage packages available.
- Driver components are fully encased in potting for moisture resistance. Complies with IEC and FCC standards. 0-10 V dimming supplied standard with all drive currents.
- Die-cast aluminum, wet location rated driver/electrical enclosure is elevated above canopy deck to prevent water entry, provide easy "knock-out" connection of primary wiring and acts as the primary heatsink ensuring cool operation of internal components for longer life. Seals to optical housing via one-piece molded silicone gasket.
- Universal voltage power supply, 120-277 VAC, 50/60 HZ and 347-480 VAC, 50/60 HZ input.
- -40°C to 55°C (-40°F to 131°F) ambient operating temperature. (Varies based on lumen package and mounting style see performance data for specifics.)
- Minimum 60,000 to 100,000 hours depending upon the ambient temperature of the installation location (see performance data for specifics.)

Hazardous Location
- Designed for lighter than air fuel applications. Product is suitable for Class 1 Divisions 2 only when properly installed per LSI installation instructions. See lsicorp.com for specific guidance. Not available on SLW.

Installation
- One-person installation.
- Installs in a 12" or 16" deck pan. Deck penetration consists of a 4" hole, simplifying installation and water sealing. Unit is designed to quickly retrofit into existing Scottsdale (4") hole as well as openings for Encore and Encore Top Access and to reconnect wiring for the SC/ECTA without having to relocate the conduit.
- Retro panels are available for existing Encores as well as kits for recessed and 2x2 installations (see separate spec sheets). Support brackets are provided standard, to prevent sagging of deck.

Warranty
- LSI LED fixtures carry a 5-year warranty (contact your LSI representative for extended warranty options.)

Listings
- UL and ETL listed to UL 1598, UL 8750 and other U.S. and International safety standards. Suitable for wet locations.
- DesignLights Consortium® (DLC) qualified product. Not all versions of this product may be DLC qualified. Please check the DLC Qualified Products List at www.designlights.org/QPL to confirm which versions are qualified.
- Meets Buy American Act requirements.
- IDA compliant with 3000K or lower color temperature.

Type: CAN

Scottsdale® Legacy (CRUS) LED Canopy Luminaire

ORDERING GUIDE

Back to Quick Links

TYPICAL ORDER EXAMPLE: CRUS SC LED SS 50 UE WHT

Prefix	Distribution	Light Source	Driver	Color Temperature	Input Voltage	Finish	Options[4]
CRUS - LED Canopy Luminaire	SC - Symmetric AC[1] - Asymmetric SCFT[2] - Combination Standard Symmetric and Forward Throw	LED	SLW - 5,000 Lumens VLW - 9,000 Lumens LW - 11,000 Lumens SS - 13,000 Lumens HO - 19,000 Lumens VHO - 22,000 Lumens[2] Custom Lumen Packages[3] VHO - 22,000 Lumens	50 - 5000K 40 - 4000K 30 - 3000K	UE - Universal Voltage (120 - 277V) HV - High Voltage (347 - 480V)	WHT - White BRZ - Bronze BLK - Black	HL[5] - Hazardous Location DFL - Diffuse Lens

Accessory Ordering Information (Accessories are field installed)

Description	Order Number
Retrofit Panels - EC / ECTA / SCF to CRUS, for 16" Deck Panel	525946
Retrofit Panels - ECTA / SCF to CRUS, for 12" Deck Panel	530281
Retrofit 2x2 Cover Panel Blank (no holes)	357282

Description	Order Number
Retrofit RIC Cover Panel Blank (no holes)	354702
Kit - Hole Plugs and Silicone (enough for 25 retrofits)*	1320540

*Consists of (25) 7/8" hole plugs, (100) 5/16" hole plugs and (1) tube of RTV

1 AC distribution utilizes a reflector which alters the look from a standard SC distribution.
2 FT distribution option only available with VHO 22,000 lumen package.
3 Custom lumen and wattage packages available consult factory Values are within industry standard tolerances but not DLC listed.
4 Not available with SCFT.
5 Not available on SLW.

Catalog #: Project:
Prepared By: Date: Type: S & S1

Slice Medium (SLM)

Outdoor LED Area Light

IP66 IK08

OVERVIEW	
Lumen Package	9,000 - 48,000
Wattage Range	63 - 401
Efficacy Range (LPW)	112 - 156
Weight lbs(kg)	30 (13.6)

QUICK LINKS

Ordering Guide | Performance | Photometrics | Dimensions

FEATURES & SPECIFICATIONS

Construction
- Rugged die-cast aluminum housing contains factory prewired driver and optical unit. Cast aluminum wiring access door located underneath.
- Fixtures are finished with LSI's DuraGrip® polyester powder coat finishing process. The DuraGrip finish withstands extreme weather changes without cracking or peeling. Other standard LSI finishes available. Consult factory.
- Shipping weight: 37 lbs in carton.

Optical System
- State-of-the-Art one piece silicone optic sheet delivers industry leading optical control with an integrated gasket to provide IP66 rated seal.
- Proprietary silicone refractor optics provide exceptional coverage and uniformity in distribution types 2, 3, 5W, FT, FTA and AM.
- Silicone optical material does not yellow or crack with age and provides a typical light transmittance of 93%.
- Zero uplight.
- Available in 5000K, 4000K, and 3000K color temperatures per ANSI C78.377. Also available in phosphor converted amber with peak intensity at 610nm.
- Minimum CRI of 70
- Integral louver (IL) and house-side shield (IH) options available for improved backlight control without sacrificing street side performance. See page 3 for more details.

Electrical
- High-performance driver features overvoltage, under-voltage, short-circuit and over temperature protection.
- 0-10V dimming (10% - 100%) standard.
- Standard Universal Voltage (120-277 VAC) Input 50/60 Hz or optional High Voltage (347-480 VAC).
- L80 Calculated Life: >100k Hours (See Lumen Maintenance on Page 5)
- Total harmonic distortion: <20%
- Operating temperature: -40°C to +50°C (-40°F to +122°F). 42L and 48L lumen packages rated to +40°C.
- Power factor: >.90
- Input power stays constant over life.
- Field replaceable 10kV surge protection device meets a minimum Category C Low operation (per ANSI/IEEE C62.41.2).
- High-efficacy LEDs mounted to metal-core circuit board to maximize heat dissipation
- Driver is fully encased in potting material for moisture resistance and complies with FCC standards. Driver and key electronic components can easily be accessed.

Controls
- Optional integral passive infrared Bluetooth™ motion and photocell sensor. Fixtures operate independently and can be commissioned via iOS or Android configuration app.
- LSI's AirLink™ wireless control system options reduce energy and maintenance costs while optimizing light quality 24/7.

Installation
- A single fastener secures the hinged door, underneath the housing and provides quick & easy access to the electrical compartment.
- Included terminal block accepts up to 12 ga. wire.
- Utilizes LSI's traditional B3 drill pattern. (See drawing on page 9)

Warranty
- LSI luminaires carry a 5-year limited warranty. Refer to https://www.lsiindustries.com/resources/terms-and-warranty.aspx for more information.

Listings
- Listed to UL 1598 and UL 8750.
- Meets Buy American Act requirements.
- IDA compliant; with 3000K color temperature selection.
- Title 24 Compliant; see local ordinance for qualification information.
- Suitable for wet locations.
- IP66 rated Luminaire per IEC 60598-1.
- 3G rated for ANSI C136.31 high vibration applicationsapplicationsare qualified.
- IK08 rated luminiare per IEC 66262 mechanical impact code.
- DesignLights Consortium® (DLC) qualified product. Not all versions of this product may be DLC qualified. Please check the DLC Qualified Products List at www.designlights.org/QPL to confirm which versions are qualified.
- Patented Silicone Optics (US Patent NO. 10,816,165 B2)

Type: S & S1

Slice Medium Outdoor LED Area Light

ORDERING GUIDE

Back to Quick Links

TYPICAL ORDER EXAMPLE: SLM LED 36L SIL FTA UNV DIM 50 70CRI ALSCS04 BRZ IL

Luminaire Prefix	Light Source	Lumen Package	Light Output	Distribution	Orientation[2]	Voltage	Driver
SLM - Slice Medium	LED	9L - 9,000 lms 12L - 12,000 lms 18L - 18,000 lms 24L - 24,000 lms 30L - 30,000 lms 36L - 36,000 lms 42L - 42,000 lms 48L - 48,000 lms Custom Lumen Packages[1]	SIL - Silicone	2 - Type 2 3 - Type 3 5W - Type 5 Wide FT - Forward Throw FTA - Forward Throw Automotive AM - Automotive Merchandise	(blank) - standard (no rotation) L- Optics rotated left 90° R - Optics rotated right 90°	UNV - Universal Voltage (120-277V) HV - High Voltage (347-480V)	DIM - 0-10V Dimming (0-10%)

Color Temp	Color Rendering	Controls (Choose One)	Finish	Options
50 - 5,000 CCT 40 - 4,000 CCT 30 - 3,000 CCT AMB - Phosphor Converted Amber[11]	70CRI - 70 CRI	(Blank) - None **Wireless Controls System** ALSC - AirLink Synapse Control System ALSCS02 - AirLink Synapse Control System with 12-20' Motion Sensor ALSCS04 - AirLink Synapse Control System with 20-40' Motion Sensor ALBCS1 - AirLink Blue Wireless Motion & Photo Sensor Controller (8-24' mounting height) ALBCS2 - AirLink Blue Wireless Motion & Photo Sensor Controller (25-40' mounting height) **Stand-Alone Controls** EXT - 0-10V Dimming leads extended to housing exterior CR7P - 7 Pin Control Receptacle ANSI C136.41[5] IMSBT1- Integral Bluetooth™ Motion and Photocell Sensor (8-24' MH)[4] IMSBT2- Integral Bluetooth™ Motion and Photocell Sensor (25-40' MH)[4] **Button Type Photocells** PCI120 - 120V PCI208-277 - 208 -277V PCI347 - 347V	BLK - Black BRZ - Dark Bronze GMG - Gun Metal Gray GPT - Graphite MSV - Metallic Silver PLP - Platinum Plus SVG - Satin Verde Green WHT - White	(Blank) - None IH - Integral Houseside Shield[2] IL - Integral Louver (Sharp Spill Light Cutoff)[2] –S1

Accessories Ordering Information[6]

Controls Accessories

Description	Order Number
Twist Lock Photocell (120V) for use with CR7P[7]	122514
Twist Lock Photocell (208-277) for use with CR7P[7]	122515
Twist Lock Photocell (347V) for use with CR7P[7]	122516
Twist Lock Photocell (480V) for use with CR7P[7]	1225180
AirLink 5 Pin Twist Lock Controller[7]	61409
AirLink 7 Pin Twist Lock Controller[7]	661410
Pole-Mounted Occupancy Sensor (24V)	663284CLR[8]
Shorting Cap for use with CR7P[7]	14932

Fusing Options[10]

Description	Order Number
Single Fusing (120V)	See Fusing Accessory Guide
Single Fusing (277V)	
Double Fusing (208V, 240V)	
Double Fusing (480V)	
Double Fusing (347V)	

Shielding Options

Mirada Small	See Shielding Guide
Mirada Medium	
Mirada Large	
Zone Medium	
Zone Large	
Slice Medium	

Mounting Accessories[8]

Description	Order Number
Round Pole Adapter (3" Round/Tapered Poles)	408273CLR
Round Pole Adapter (4" Round Poles)	379967CLR
Round Pole Adapter (5" Round Poles)	379968CLR
Universal Mounting Bracket	684616CLR
Adjustable Slip Fitter (2" - 2 3/8" Tenon)	688138CLR
Quick Mount Pole Bracket (Square Pole)	687073CLR
Quick Mount Pole Bracket (4-5" Round Pole)	689903CLR
15 Tilt Quick Mount Pole Bracket (Square Pole)	688003CLR
15 Tilt Quick Mount Pole Bracket (4-5" Round Pole)	689905CLR
Wall Mount Bracket	382132CLR
Wood Pole Bracket (6" Minimum Pole Diameter)	751219CLR

Shielding & Miscellaneous Accessories

Description	Order Number
Integral Louver/Shield	684812
Internal Houseside Shield	743414
10' Linear Bird Spike Kit (6' Recommended per Luminaire)	751632

FOOTNOTES:
1. Custom lumen and wattage packages available, consult factory. Values are within industry standard tolerances but not DLC listed.
2. Not available on "Type 5W" distribution.
3. Consult factory for availability.
4. IMSBT is field configurable via the LSI app that can be downloaded from your smartphone's native app store.
5. Control device or shorting cap must be ordered separately. See Accessory Ordering Information.
6. Accessories are shipped separately and field installed.
7. Fusing must be located in hand hole of pole.
8. "CLR" denotes finish. See Finish options.
9. Only available with ALSC/ALSCH control options.
10. Fusing must be located in hand hole of pole. See Fusing Accessory Guide for compatability.
11. Only available in 9L and 12L Lumen Packages. Consult factory for lead time and availability.

Catalog #: Project: Type: H & H-BB
Prepared By: Date:

Mirada Medium Wall Sconce (XWM)

Outdoor Wall Sconce

IK08

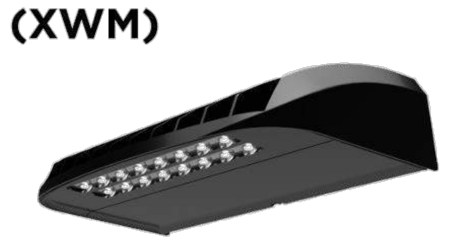

OVERVIEW	
Lumen Package (lm)	3,000 - 21,000
Wattage Range (W)	23 - 175
Efficacy Range (LPW)	125 - 158
Weight lbs (kg)	27 (12.2)

QUICK LINKS

Ordering Guide | Performance | Photometrics | Dimensions

FEATURES & SPECIFICATIONS

Construction
- Rugged die-cast aluminum housing contains factory prewired driver and optical unit. Hinged die-cast aluminum wiring access door located underneath.
- Galvanized-steel universal wall mount bracket comes standard with hinging mechanism to easily access the junction box wire connections without removing the luminaire.
- Optional pole-mounting bracket (XPMA) permits mounting to standard poles.
- Fixtures are finished with LSI's DuraGrip® polyester powder coat finishing process. The DuraGrip finish withstands extreme weather changes without cracking or peeling. Other standard LSI finishes available. Consult factory.
- Max shipping weight: 30lbs in carton

Optical System
- State-of-the-Art one piece silicone optic provides industry leading optical control while also acting as an integrated gasket reducing system complexity and improving fixture reliability.
- Proprietary silicone refractor optics provide exceptional coverage and uniformity in Types 2, 3, and Forward Throw (FT) distributions.
- Silicone optical material does not yellow or crack with age and provides a typical light transmittance of 93%.
- Zero uplight.
- Available in 5000K, 4000K and 3000K color temperatures per ANSI C78.377. Also Available in Phosphor Converted Amber with Peak intensity at 610nm.
- Minimum CRI of 70.

Electrical
- High-performance programmable driver features over-voltage, under-voltage, short-circuit and over temperature protection. Custom lumen and wattage packages available.
- 0-10V dimming (10% - 100%) standard.
- Standard Universal Voltage (120-277 Vac) Input 50/60 Hz or optional High Voltage (347-480 Vac).
- L80 Calculated Life: >100k Hours
- Total harmonic distortion: <20%
- 3L to 12L operating temperature: -40°C to +50°C (-40°F to +122°F)
- 15L operating temperature: -40°C to +45°C (-40°F to +113°F).
- 18L operating temperature: -40°C to +40°C (-40°F to +104°F).
- 21L operating temperature: -40°C to +35°C (-40°F to + 95°F).
- Power factor: >.90
- Input power stays constant over life.
- Optional 10kV surge protection device meets a minimum Category C Low operation (per ANSI/IEEE C62.41.2).
- High-efficacy LEDs mounted to metal-core circuit board to maximize heat dissipation
- Components are fully encased in potting material for moisture resistance. Driver complies with FCC standards. Driver and key electronic components can easily be accessed via hinged door.
- Optional integral emergency battery pack provides 90-minutes of constant power to the LED system, ensuring code compliance. A test switch/indicator button is installed on the housing for ease of maintenance. The fixture delivers 1500 lumens during emergency mode.

Controls
- Integral passive infrared Bluetooth™ motion sensor options. Fixtures operate independently and can be commissioned via an iOS or Android configuration app. Updates and modifications to the control strategy are easily implemented via an intuitive app.
- LSI's AirLink™ Blue lighting control system is a simple feature rich wireless Bluetooth mesh network. The integrated fixture sensor module provides wireless control of grouped fixtures based on motion sensors, daylight or a fully customizable schedule.

Installation
- Universal wall mounting plate easily mounts directly to 4" octagonal or square junction box.
- 2 fasteners secure the hinged door underneath the housing and provide quick & easy access to the electrical compartment for installing/servicing.
- Optional terminal block accepts up to 12 ga wire.

Warranty
- LSI luminaires carry a 5-year limited warranty. Refer to https://www.lsicorp.com/resources/terms-conditions-warranty/ for more information.
- 1 Year warranty on Battery Back-up option.

Listings
- Listed to UL 1598 and UL 8750.
- Meets Buy American Act requirements.
- IDA compliant; with 3000K or lower color temperature selection.
- Title 24 Compliant; see local ordinance for qualification information.
- Suitable for wet Locations.
- IP65 rated luminaire per IEC 60598.
- 3G rated for ANSI C136.31 high vibration applications when pole mounted (using optional XPMA bracket) or wall mounted.
- IK08 rated luminiare per IEC 66262 mechanical impact code
- DesignLights Consortium® (DLC) Premium qualified product. Not all versions of this product may be DLC Premium qualified. Please check the DLC Qualified Products List at www.designlights.org/QPL to confirm which versions are qualified.

Mirada Medium Wall Sconce (XWM) Outdoor Wall Sconce

Type: H & H-BB

Have questions? Call us at (800) 436-7800

ORDERING GUIDE

Back to Quick Links

TYPICAL ORDER EXAMPLE: XWM 2 LED 03L 30 UE BRZ ALSC

Family	Distribution	Light Source	Lumen Package	Color Temperature
XWM - Mirada Medium Wall Sconce	2 - Type 2 3 - Type 3 FT - Type 4 Forward Throw	LED	3L - 3,000 4L - 4,000 6L - 6,000 8L - 8,000 12L - 12,000 15L - 15,000 18L - 18,000 21L - 21,000 Custom Lumen Packages[1]	30 - 3000K 40 - 4000K 50 - 5000K AMB - Phosphor Converted Amber[2]

Voltage	Finish	Controls	Options
UE - Universal Voltage (120-277V) HV - High Voltage (347-480V)	BLK - Black BRZ - Dark Bronze GMG - Gun Metal Gray GPT - Graphite MSV - Metallic Silver PLP - Platinum Plus SVG - Satin Verde Green WHT - White	Blank - None **Wireless Controls** ALSC - Airlink Synapse Control System ALSCS01 - AirLink Synapse Control System with 8-12' Motion Sensor ALSCS02 - AirLink Synapse Control System with 12-20' Motion Sensor ALBCS1 - AirLink Blue Wireless Motion & Photo Sensor Controller (8-24' MH)[3] ALBCS2 - AirLink Blue Wireless Motion & Photo Sensor Controller (25-40' MH)[3] **Standalone Controls** DIM - 0-10v Dimming leads extended to housing exterior IMSBT1 -Integral Bluetooth™ Motion and Photocell Sensor (8-24' MH)[3,4] IMSBT2 - Integral Bluetooth™ Motion and Photocell Sensor (25-40' MH)[3,4] **Button Type Photocells** PCI120 - 120V PCI208-277 - 208 -277V PCI347 - 347V	Blank - None BB - Battery Back-up (0°C)[5] –H-BB CWBB - Cold Weather Battery Backup (-20°C)[5] XPMA - Pole Mounting Bracket SP1 - 10kV Surge Protection TB - Terminal Block

Need more information? Click here for our glossary

Have additional questions? Call us at (800) 436-7800

FUSING ACCESSORY ORDERING INFORMATION[6]

Part Number	Description
FK120[7]	FK120 - Single Fusing
FK277[7]	FK277 - Single Fusing
FK347[7]	FK347 - Single Fusing
DFK208[7]	DFK - Double Fusing
DFK240[7]	DFK - Double Fusing (240V)
DFK480[7]	DFK - Double Fusing (480V)

MOUNTING ACCESSORY ORDERING INFORMATION[6]

Part Number[8]	Description
356915CLR	XWM Wet Location Surface Conduit/Wiring Box
751632	10' Linear Bird Spike Kit (2' Recommended per Luminaire)

1 Custom lumen and wattage packages available consult factory. Values are within industry standard tolerances but not DLC listed.
2 Only available in [illegible]
3 IMSBT and ALBCS [illegible]
4 IMSBTxL is field configurable via the [illegible] app that can be downloaded from your smartphone's app store.
5 Not available in HV.
6 Accessories are shipped separately and field installed.
7 Fusing must be located in hand hole for pole or in the junction box.
8 "CLR" [illegible]

Catalog # :	Project :
Prepared By :	Date :

Type: M

LCD6

6" LED Commercial Downlight

6 inch LED new construction downlight delivers superior performance and energy efficiency. Designed to use anodized aluminum reflectors delivering even illumination and low glare. The high performance luminaire offers 1000 up to 4000 lumens with color temperatures of 2700K, 3000K, 3500K, 4000K at 80 CRI. Standard driver offers universal (120-277V) and 0 -10V dimming down to 1%. The LCD series is ideal for low to medium ceiling heights for retail, hospitality and commercial applications.

origin™

Features & Specifications

Optical System
- LED source provides superior lumen output with maximum visual comfort.
- Tailored spot, narrow flood, flood and wide flood beam optics designed for glare free illumination.
- Choice of flanged or flangeless spun reflector utilizing heavy gauge highly reflective diffuse anodized aluminum to deliver low glare, even illumination of the space.
- Reflectors are retained with three retention clips holding the flange tight to the finished ceiling surface.
- Minimum CRI of 80.

Electrical
- High-performance driver features over-voltage, under voltage, short-circuit and over temperature protection.
- 0-10 volt dimming (1% - 100%) standard.
- Standard Universal Voltage (120-277 Vac) Input 50/60 Hz.
- L70 Calculated Life: > 50k Hours projected @ 25°C per IESNA TM-21-11.
- Total harmonic distortion: <20%
- Power factor: >.90
- Input power stays constant over life.
- Compatible with Triac (forward-phase or leading-edge), ELV (reverse-phase or trailing edge) dimming only at 120 Vac.
- Driver can be accessed from below plenum for servicing.
- High-efficacy LEDs with integrated circuit board mount directly to an extruded aluminum heatsink to maximize heat dissipation and promote long life.
- Remote Emergency Battery (120-277V) field installed is available to meet critical life safety lighting requirements. The 90-minute battery provides 7.8watts constant power to the LED system, ensuring code compliance.To calculate light output during emergency mode(EM battery 7.8 watts x LPW of fixture being powered - see spec sheet). Detailed wiring diagram and installation instructions located on website.

Intertek Dimmable RoHS COMPLIANT damp location

Dimensions

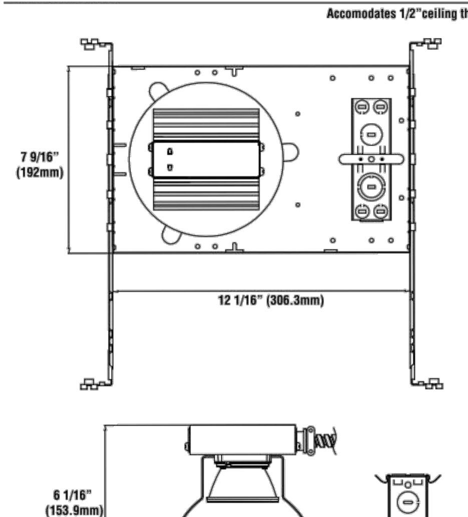

Type: M

LCD6

6" LED Commercial Downlight

Luminaire Ordering Guide

TYPICAL ORDER EXAMPLE: LCD6 LED 25L UNV DIM1 35 NF TR6R HAZ

Family/ Size	LED Gen	Lumen Package	Voltage	Driver	Color Temperature	CRI	Beam Optics[6]
LCD6 - 6" New Construction[4]	LED	14L - 1400 25L - 2500 32L - 3200 41L - 4100	UNV - 120-277V	DIM1 - Dims to 1% (0-10V dimming)	30 - 3000K 35 - 3500K 40 - 4000K	Blank - 80 CRI	SP - Spot NF - Narrow Flood FL- Flood WF - Wide Flood

	Reflector	Finish	
Self-Fange	TR6R - Open Reflector	SF HAZ - Haze semi- diffused	
		SF SPC - Specular clear	
	TR6RWW - Wall Wash[2]	SF HAZ - Haze semi-diffused	
Flangeless (ship standard w/ white plastic trim ring)	TR6R - Open Reflector	HAZ - Haze semi-diffused, white trim ring	
		SPC - Specular clear, white trim ring	
	TR6RFL- Frosted Floating Lens[3]	HAZ - Haze semi-diffused Reflector w/ Frosted Floating Lens, w/ integrated white metal trim ring (optional trim ring not compatible)	
		SPC - Specular Clear Reflector w/ Frosted Floating Lens, w/ integrated white metal trim ring (optional ring not compatible)	
	TR6RWW - Wall Wash[2]	HAZ - Haze semi-diffused wall wash reflector, white trim ring	
	TR6B - Baffle	HAZ - Haze semi-diffused reflector	WH - White baffle and white trim ring
			BL - Black Baffle and white trim ring
	TR6BL- Baffle w/ Regressed Lens[1]	HAZ - Hazed semi-diffused	WH - White baffle and white trim ring
		SPC - Specular clear	BL - Black baffle and white trim ring
	TR6RL - Regressed Lens[1]	HAZ - Haze semi-diffused reflector w/ specular clear regressed lens and white trim ring	
		SPC - Specular clear reflector w/ specular clear regressed lens and white trim ring	

Accessory Ordering Information (Accessories are field installed)

Description	Order Number
WH - White metal trim ring (only compatible w/flangeless trims)	616106
EM - Emergency Battery	658633

NOTES:
1. Regressed lens trims are wet location listed. All other trims are rated for damp location.
2. TR6RWW wall wash reflector comes with 40° integrated optic; additional beam optics not compatible
3. TR6RFL frosted floating lens comes with integrated white metal trim; accessory white metal trim ring not required)
4. Housing can ship ahead of the light engine and reflector
5. 90 CRI requires 55 day leadtime & 100 MOQ; Consult Factory
6. Refer to IES Files for Beam Spread.

PLANNING AND COMMUNITY DEVELOPMENT DIRECTOR: ____________

Galloway
1155 Kelly Johnson Blvd., Suite 305
Colorado Springs, CO 80920
719.900.7220
GallowayUS.com

PRELIMINARY
NOT FOR BIDDING
NOT FOR CONSTRUCTION

COPYRIGHT
THESE PLANS ARE AN INSTRUMENT OF SERVICE AND ARE THE PROPERTY OF GALLOWAY, AND MAY NOT BE DUPLICATED, DISCLOSED, OR REPRODUCED WITHOUT THE WRITTEN CONSENT OF GALLOWAY. COPYRIGHTS AND INFRINGEMENTS WILL BE ENFORCED AND PROSECUTED.

MURPHY OIL USA, INC.
200 PEACH STREET
EL DORADO, AR 71730

MURPHY USA

SITE DEVELOPMENT PLAN
MURPHY OIL USA #7968

XXXX MERIDIAN PARK DRIVE
EL PASO COUNTY, COLORADO

#	Date	Issue / Description	Init.

Project No:	Moc901028
Drawn By:	JMG
Checked By:	JMG
Date:	02/09/2024

PHOTOMETRIC DETAILS

L1.1

Sheet 2 of 2