GENERAL NOTES

ALL WORK SHALL BE DONE IN ACCORDANCE WITH THE COLORADO DEPARTMENT OF TRANSPORTATION 2019 STANDARD SPECIFICATIONS FOR ROAD AND BRIDGE CONSTRUCTION.

STRUCTURE EXCAVATION SHALL BE AS SHOWN ON M-206-2. STRUCTURE BACKFILL SHALL BE AS SHOWN ON THE PLANS.

EXPANSION JOINT MATERIAL SHALL MEET AASHTO SPECIFICATION M213.

ALL EXPOSED CONCRETE SURFACES SHALL RECEIVE A CLASS 1 FINAL FINISH TO ONE FOOT BELOW THE GROUND LINE.

THE FOLLOWING STRUCTURAL STEEL SHALL BE AASHTO M270 GRADE 36 (ASTM A-36): EXPANSION DEVICES, REMOVABLE COVER PLATES, PIPE RAILING BASE PLATES.

THE FOLLOWING STRUCTURAL STEEL SHALL BE AASHTO M270 GRADE 50 (ASTM A-572): PILING.

ALL STRUCTURAL CONCRETE SHALL CONFORM TO CEMENTITIOUS MATERIALS REQUIREMENTS CORRESPONDING TO SULFATE EXPOSURE CLASS 0.

FIELD WELDING OF ANY KIND SHALL NOT BE PERMITTED ON THE STEEL GIRDERS UNLESS SPECIFICALLY CALLED FOR IN THE PLANS.

GRADE 60 REINFORCING STEEL IS REQUIRED

ALL REINFORCING STEEL SHALL BE EPOXY COATED UNLESS OTHERWISE NOTED

(N) DENOTES NON COATED REINFORCING STEEL

ALL THE PROVISIONS FOR BRIDGE DECK CONCRETE SHALL ALSO APPLY TO APPROACH SLAB CONCRETE

CLEARANCE FROM THE SURFACE OF CONCRETE TO THE FACE OF REINFORCEMENT SHALL BE 2 INCHES UNLESS NOTED OTHERWISE.

SPLICE LOCATIONS ARE BASED ON AN ASSUMED 60' STOCK LENGTH. SPLICES SHALL BE ALTERNATELY STAGGERED UNLESS NOTED OTHERWISE.

THE CONTRACTOR SHALL BE RESPONSIBLE FOR THE STABILITY OF THE STRUCTURE DURING CONSTRUCTION

STATIONS, ELEVATIONS, AND DIMENSIONS CONTAINED IN THESE PLANS ARE BASED ON THE "FOREST LAKES FILING NO. 6 PUBLIC STREET IMPROVEMENT PLAN" BY CLASSIC CONSULTING. THE CONTRACTOR SHALL VERIFY ALL DEPENDENT DIMENSIONS IN THE FIELD PRIOR TO ORDERING OR FABRICATING ANY MATERIAL.

THE ENGINEER SHALL BE NOTIFIED IN WRITING OF ANY DISCREPANCIES BETWEEN THE PLANS AND ACTUAL FIELD CONDITIONS.

ALL LONGITUDINAL AND TRANSVERSE DIMENSIONS ARE MEASURED HORIZONTALLY AND INCLUDE NO CORRECTION FOR GRADE

THE INFORMATION SHOWN IN THESE PLANS CONCERNING THE TYPE AND LOCATION OF UNDERGROUND UTILITIES IS NOT GUARANTEED TO BE ACCURATE OR ALL INCLUSIVE. THE CONTRACTOR IS RESPONSIBLE FOR MAKING HIS OWN DETERMINATION AS TO THE TYPE AND LOCATION OF UNDERGROUND UTILITIES AS MAY BE NECESSARY TO AVOID DAMAGE THERETO. THE CONTRACTOR SHALL CONTACT THE UTILITY NOTIFICATION CENTER OF COLORADO AT 811 (1-800-922-1987) AT LEAST 3 DAYS (2 DAYS NOT INCLUDING THE DAY OF NOTIFICATION) PRIOR TO ANY EXCAVATION OR OTHER EARTHWORK.

THE SUPERSTRUCTURE DESIGN WAS PERFORMED BY CONTECH ENGINEERED SOLUTIONS LLC. THE INFORMATION PERTAINING TO THE SUPERSTRUCTURE IS CONTAINED IN CONTRACT DRAWINGS DATED 12/15/2020 (JOB NO. 621715).

THE SOILS AND FOUNDATION INVESTIGATION FOR THIS PROJECT WAS PERFORMED BY ENTECH ENGINEERING, INC. THE SUBSURFACE CONDITIONS AND RECOMMENDATIONS FOR THE STRUCTURE PROJECT ARE CONTAINED IN A REPORT DATED 09/04/2020 (JOB NO. 200150).

THE END 6' OF THE GIRDER AT EACH ABUTMENT AND PIER SHALL BE PAINTED, EQUIVALENT TO FEDERAL STANDARD 595B COLOR NO. 30045 (WEATHERED STEEL COLOR).

DESIGN DATA

AASHTO LRFD BRIDGE DESIGN SPECIFICATIONS, EIGHTH EDITION WITH CURRENT INTERIMS.
DESIGN METHOD: LOAD AND RESISTANCE FACTOR DESIGN (LRFD).

LIVE LOAD: HL-93 (DESIGN TRUCK OR TANDEM, AND DESIGN LANE LOAD)
DEAD LOAD: ASSUMES 36 LBS. PER SQ. FT. FOR BRIDGE DECK OVERLAY
EARTH LOAD: γ = 135 PCF.

STRUCTURAL BACKFILL CLASS 1:
AT-REST WINGWALL: EFW = 57 pcf
ACTIVE ABUTMENT: EFW = 45 pcf

REINFORCED CONCRETE:
CLASS D CONCRETE: f'c = 4,500 psi
REINFORCING STEEL: fy = 60,000 psi

CAISSON CONCRETE:
CLASS BZ CONCRETE: f'c = 4,000 psi
REINFORCING STEEL: fs = 60,000 psi

STRUCTURAL STEEL, AASHTO M270 (ASTM A-572):
GRADE 50 fy = 50,000 psi

SEISMIC DESIGN CRITERIA

SEISMIC ZONE = 1
NO SEISMIC DESIGN IS REQUIRED

PEAK GROUND ACCELERATION PGA = 0.058 g
SHORT-PERIOD SPECTRAL ACCELERATION Ss = 0.185 g (PER GEOTECH REPORT)
LONG-PERIOD SPECTRAL ACCELERATION S1 =0.059 g (PER GEOTECH REPORT)
SITE CLASS D
SITE FACTOR Fpga = 1.6
SITE FACTOR Fa = 1.6
SITE FACTOR Fv = 2.4
PEAK DESIGN SPECTRAL ACCELERATION As = 0.0928 g
SHORT-PERIOD DESIGN SPECTRAL ACCELERATION Sds = 0.296 g
LONG-PERIOD DESIGN SPECTRAL ACCELERATION Sd1 = 0.142 g
To = 0.096 sec
Ts = 0.478 sec

BRIDGE DESCRIPTION

2 SPAN (99'-7⅛", 99'-7⅛") TWIN BRIDGES
PREFABRICATED CONTECH BRIDGES WITH STEEL WIDE FLANGE GIRDERS
MESA TOP DRIVE SOUTH OVER NORTH BEAVER CREEK
24'-0" ROADWAY CURB TO CURB
45°00'00" SKEW
5'-6" SIDEWALK, THRIE BEAM RAIL WITH SAFETY RAIL ABOVE SIDEWALK
6" CURB, THRIE BEAM

HYDRAULIC DATA

100YR WSE = 7058.46 AT NORTH BRIDGE HCL
100YR SCOUR AT PIER = 7046.76
NO 100YR SCOUR AT ABUTMENTS
100YR VELOCITY = 5.67 FT/S

3

INDEX OF SHEETS:

B01	GENERAL INFORMATION
B02	SUMMARY OF QUANTITIES
B03	GENERAL LAYOUT
B04	TYPICAL SECTION
B05	ENGINEERING GEOLOGY
B06	BRIDGE HYDRAULIC INFORMATION
B07	CONSTRUCTION LAYOUT
B08	FOUNDATION LAYOUT
B09	CAISSON DETAILS
B10	ABUTMENT 1 PLAN AND ELEVATION
B11	ABUTMENT 3 PLAN AND ELEVATION
B12	ABUTMENT DETAILS
B13	WINGWALL DETAILS
B14	PIER 2 PLAN AND ELEVATION
B15	PIER DETAILS
B16	BRIDGE EXPANSION DEVICE (1 OF 2)
B17	BRIDGE EXPANSION DEVICE (2 OF 2)
B18	PIPE RAILING
B19	APPROACH SLAB
B20	BACKFILL DETAILS (1 OF 2)
B21	BACKFILL DETAILS (2 OF 2)

GENERAL KEY:

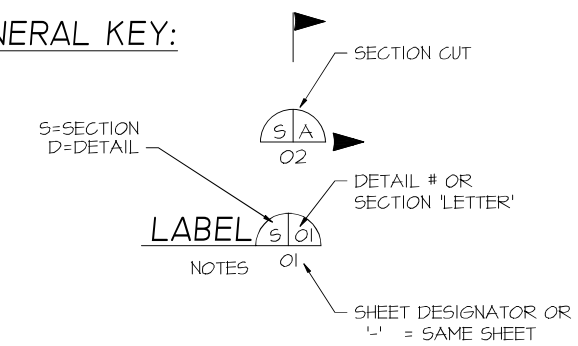

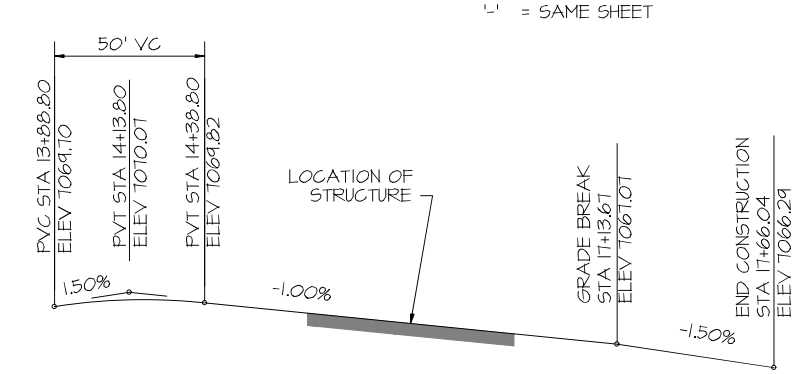

PROFILE GRADE

DESIGN ENGINEER'S STATEMENT:
THESE DETAILED PLANS AND SPECIFICATIONS WERE PREPARED UNDER MY DIRECTION AND SUPERVISION. SAID PLANS AND SPECIFICATIONS HAVE BEEN PREPARED ACCORDING TO THE CRITERIA ESTABLISHED BY THE COUNTY FOR BRIDGE PLANS AND SPECIFICATIONS. SAID PLANS AND SPECIFICATIONS MEET THE PURPOSES FOR WHICH THE PARTICULAR BRIDGES ARE DESIGNED FOR AND ARE CORRECT TO THE BEST OF MY KNOWLEDGE AND BELIEF. I ACCEPT RESPONSIBILITY FOR ANY LIABILITY DIRECTLY CAUSED BY THE NEGLIGENT ACTS, ERRORS, OR OMISSIONS ON MY PART IN PREPARATION OF THESE DETAILED PLANS AND SPECIFICATIONS.

Heather Reed
HEATHER REED, P.E. #49431
STEAMBOAT STRUCTURES LLC

07/12/2022
DATE

AS-BUILT/
CONSTRUCTED

COLORADO REGISTERED PROFESSIONAL ENGINEER
HEATHER MARIE REED
49431
Heather Reed
07-12-22

EL PASO COUNTY:
COUNTY PLAN REVIEW IS PROVIDED ONLY FOR GENERAL CONFORMANCE WITH COUNTY DESIGN CRITERIA. THE COUNTY IS NOT RESPONSIBLE FOR THE ACCURACY AND ADEQUACY OF THE DESIGN, DIMENSIONS, AND/OR ELEVATIONS WHICH SHALL BE CONFIRMED AT THE JOB SITE. THE COUNTY THROUGH THE APPROVAL OF THIS DOCUMENT ASSUMES NO RESPONSIBILITY FOR COMPLETENESS AND/OR ACCURACY OF THIS DOCUMENT.

FILED IN ACCORDANCE WITH THE REQUIREMENTS OF THE EL PASO COUNTY LAND DEVELOPMENT CODE, DRAINAGE CRITERIA MANUAL VOLUMES 1 AND 2 AND ENGINEERING CRITERIA MANUAL AS AMENDED.

IN ACCORDANCE WITH THE ECM SECTION 1.12, THESE CONSTRUCTION DOCUMENTS WILL BE VALID FOR CONSTRUCTION FOR A PERIOD OF 2 YEARS FROM THE DATE SIGNED BY THE EL PASO COUNTY ENGINEER. IF CONSTRUCTION HAS NOT STARTED WITHIN THOSE 2 YEARS, THE PLANS WILL NEED TO BE RESUBMITTED FOR APPROVAL, INCLUDING PAYMENT OF REVIEW FEES AT THE PLANNING AND COMMUNITY DEVELOPMENT DIRECTOR'S DISCRETION.

JENNIFER IRVINE, P.E.
COUNTY ENGINEER/ECM ADMINISTRATOR

DATE

FOR BURIED UTILITY INFORMATION
THREE (3) BUSINESS DAYS
BEFORE YOU DIG
CALL 811
(or 1-800-922-1987)
UTILITY NOTIFICATION
CENTER OF COLORADO (UNCC)
www.uncc.org

	REVISIONS	DATE	BY
1	REVISED BEARING PAD DEPTH	5-19-21	HMR
2	REVISED 100YR WATER	06-11-21	HMR
3	REVISED HYDRAULIC DATA	07-09-21	HMR
4			
5			
6			
7			

PREPARED FOR:
STRUCTURES
CLASSIC HOMES

STEAMBOAT STRUCTURES

DESIGNED BY: HMR
DRAWN BY: AJM
PROJECT MANAGER: HMR
DATE: 7/12/22

PROJECT TITLE: FOREST LAKES BRIDGES
PROJECT LOCATION: MONUMENT, CO

GENERAL INFORMATION

STRUCT/JOB:
SHEET NO. B01

THIS DRAWING (HARD COPY AND/OR ELECTRONIC FILE), INCLUDING THE PRINCIPLES OF DESIGN, IS THE PROPERTY OF THE ORIGINATOR OF THIS DOCUMENT AND IS SUBMITTED WITH THE AGREEMENT THAT IT IS NOT TO BE ALTERED, REPRODUCED, COPIED OR LOANED, IN PART OR WHOLE. IT IS NOT TO BE USED IN ANY MANNER THAT MAY BE A DETRIMENT TO ITS ORIGINATOR. USE THIS ELECTRONIC FILE AT YOUR OWN RISK WITH NO LIABILITY TO THE ORIGINATOR FOR ANY INACCURACIES OR INCOMPATIBILITIES. SEE THE LATEST ORIGINAL. ALL DATA IS GRAPHICAL IN NATURE, AND IS FOR INFORMATION PURPOSES ONLY. ALL DIMENSIONS, SLOPES, ELEVATIONS WERE DERIVED FROM OTHER SOURCES. ACCEPTANCE OF THIS DRAWING IS AN AGREEMENT TO THE ABOVE.

SUMMARY OF QUANTITIES (TWO BRIDGES, EASTBOUND AND WESTBOUND BRIDGES)

ITEM NO.	DESCRIPTION	UNIT	SUPERSTRUCTURE	ABUTMENT 1	PIER 2	ABUTMENT 3	TOTAL
206	STRUCTURE EXCAVATION	CY	-	545	45	65	655
206	STRUCTURE BACKFILL (CLASS 1)	CY	-	1,595	25	1,275	2,895
206	MECHANICAL REINFORCEMENT OF SOIL	CY	-	1,595	-	1,275	2,870
502	STEEL PILING (HP 12x53)	LF	-	827	-	958	1,785
503	DRILLED CAISSON (42 INCH)	LF	-	-	182	-	182
506	RIPRAP	CY	-	1317	-	982	2,299
514	PIPE RAILING	LF	108	-	-	-	108
518	BRIDGE COMPRESSION SEAL	LF	85	-	-	-	85
518	BRIDGE EXPANSION DEVICE (0-4 INCH)	LF	170	-	-	-	170
601	CONCRETE CLASS D (BRIDGE)	CY	503	210	68	182	963
602	REINFORCING STEEL (EPOXY)	LB	77,965	23,725	16,885	20,815	139,390
628	BRIDGE GIRDER AND DECK UNIT (BY OTHERS)	EACH	1	-	-	-	1

1. RIPRAP QUANTITY PROVIDED FOR INFORMATION ONLY. REFER TO CIVIL PLANS AND BRIDGE HYDRAULIC INFORMATION SHEET FOR RIPRAP LIMITS. QUANTITY ASSUMES 4' DEEP RIPRAP.
2. INCLUDES 377 CY OF CONCRETE WITHIN THE DECK, CURB AND SIDEWALK WHICH IS TO BE INCLUDED IN THE CONTECH PLANS. THE VALUE IS INCLUDED FOR OVERALL QUANTITY CALCULATIONS INFORMATION ONLY.
3. INCLUDES 59,465 LB OF REINFORCING STEEL WITHIN THE DECK, CURB AND SIDEWALK WHICH IS TO BE INCLUDED IN THE CONTECH PLANS. THE VALUE IS INCLUDED FOR OVERALL QUANTITY CALCULATIONS INFORMATION ONLY.

AS-BUILT/
CONSTRUCTED

COLORADO REGISTERED PROFESSIONAL ENGINEER
HEATHER MARIE RAST
49431
07-12-22

REVISIONS		DATE	BY
1	REVISED BEARING PAD DEPTH	05-19-21	HMR
2	REVISED QUANTITY	06-11-21	HMR
3	REVISED QUANTITY	07-09-21	HMR
4			
5			
6			
7			

PREPARED FOR: STRUCTURES / CLASSIC HOMES

STEAMBOAT STRUCTURES

DESIGNED BY: HMR
DRAWN BY: AJM
PROJECT MANAGER: HMR
DATE: 7/12/22

PROJECT TITLE: FOREST LAKES BRIDGES
PROJECT LOCATION: MONUMENT, CO
SUMMARY OF QUANTITIES
STRUCT./JOB:
SHEET NO. B02

THIS DRAWING (HARD COPY AND/OR ELECTRONIC FILE), INCLUDING THE PRINCIPLES OF DESIGN, IS THE PROPERTY OF THE ORIGINATOR OF THIS DOCUMENT AND IS SUBMITTED WITH THE AGREEMENT THAT IT IS NOT TO BE ALTERED, REPRODUCED, COPIED OR LOANED, IN PART OR WHOLE. IT IS NOT TO BE USED IN ANY MANNER THAT MAY BE A DETRIMENT TO ITS ORIGINATOR. USE THIS ELECTRONIC FILE AT YOUR OWN RISK WITH NO LIABILITY TO THE ORIGINATOR FOR ANY INACCURACIES OR INCOMPATIBILITIES. SEE THE LATEST ORIGINAL. ALL DATA IS GRAPHICAL IN NATURE, AND IS FOR INFORMATION PURPOSES ONLY. ALL DIMENSIONS, SLOPES, ELEVATIONS WERE DERIVED FROM OTHER SOURCES. ACCEPTANCE OF THIS DRAWING IS AN AGREEMENT TO THE ABOVE.

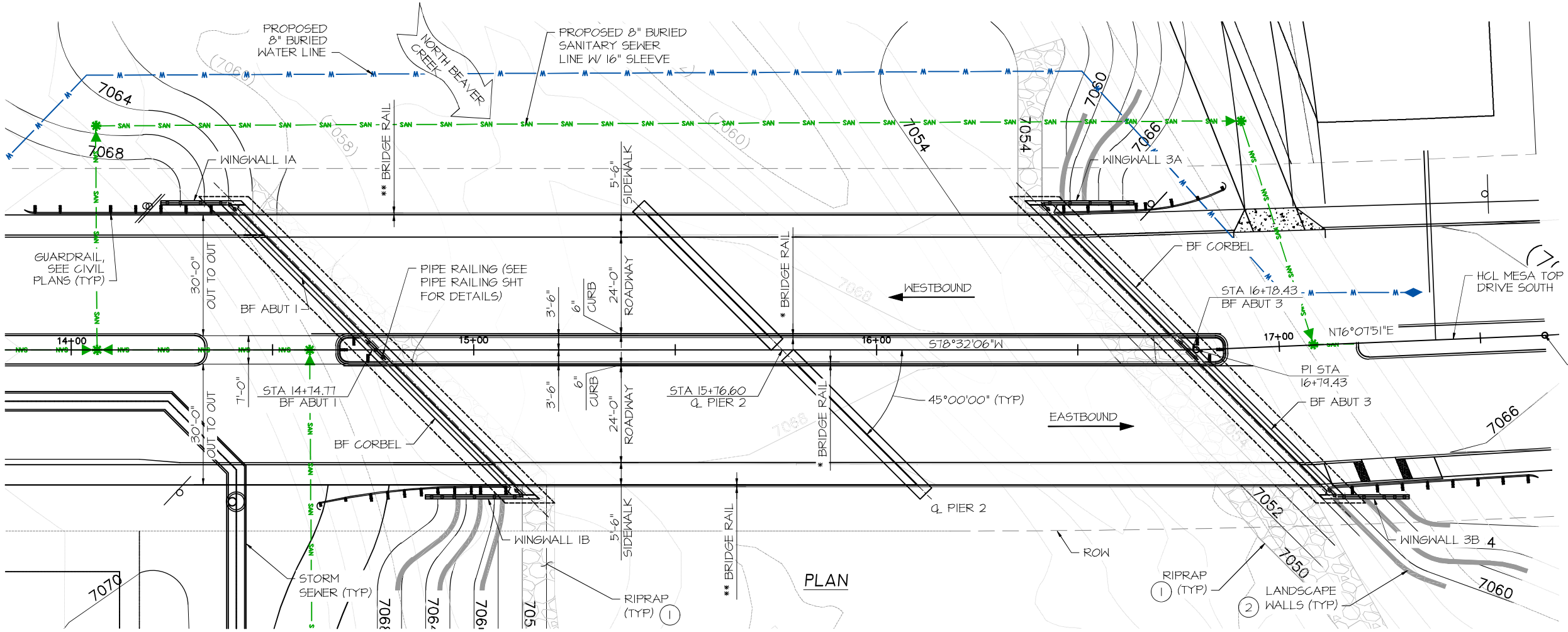

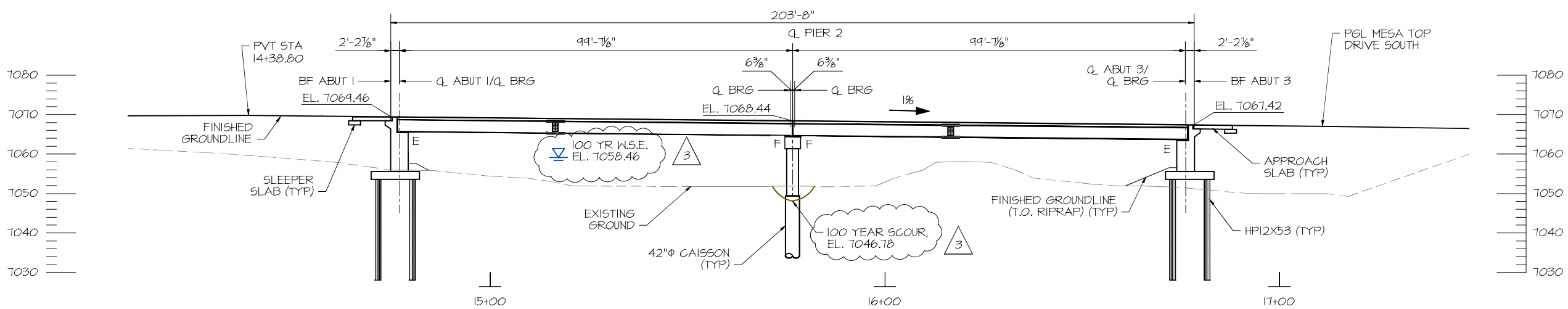

ELEVATION

ELEVATIONS ARE AT FINISHED GRADE AT HCL
(WINGWALLS NOT SHOWN FOR CLARITY)

NOTES:

1. REFER TO CIVIL PLANS FOR RIPRAP LIMITS AND INFORMATION.
2. REFER TO CIVIL PLANS FOR LANDSCAPE WALL INFORMATION.
3. DIMENSIONS AND ELEVATIONS ARE BASED ON CIVIL STREET PLANS. CONTRACTOR TO VERIFY.
4. REFER TO CIVIL PLANS FOR GUARDRAIL AND MEDIAN GUARDRAIL LOCATION, LENGTHS AND DIMENSIONS.

AS-BUILT/
CONSTRUCTED

COLORADO REGISTERED PROFESSIONAL ENGINEER
HEATHER MARIE READ
49431
07-12-22

REVISIONS		DATE	BY
1	REVISED BEARING PAD DEPTH	05-19-21	HMR
2	REVISED 100YR WATER	06-11-21	HMR
3	REVISED HYDRAULIC DATA	07-09-21	HMR
4			
5			
6			
7			

PREPARED FOR:

STRUCTURES
CLASSIC HOMES

STEAMBOAT STRUCTURES

DESIGNED BY: HMR
DRAWN BY: AJM
PROJECT MANAGER: HMR
DATE: 7/12/22

PROJECT TITLE: FOREST LAKES BRIDGES
PROJECT LOCATION: MONUMENT, CO

GENERAL LAYOUT

STRUCT/JOB:
SHEET NO. B03

THIS DRAWING (HARD COPY AND/OR ELECTRONIC FILE), INCLUDING THE PRINCIPLES OF DESIGN, IS THE PROPERTY OF THE ORIGINATOR OF THIS DOCUMENT AND IS SUBMITTED WITH THE AGREEMENT THAT IT IS NOT TO BE ALTERED, REPRODUCED, COPIED OR LOANED, IN PART OR WHOLE. IT IS NOT TO BE USED IN ANY MANNER THAT MAY BE A DETRIMENT TO ITS ORIGINATOR. USE THIS ELECTRONIC FILE AT YOUR OWN RISK WITH NO LIABILITY TO THE ORIGINATOR FOR ANY INACCURACIES OR INCOMPATIBILITIES. SEE THE LATEST ORIGINAL. ALL DATA IS GRAPHICAL IN NATURE, AND IS FOR INFORMATION PURPOSES ONLY. ALL DIMENSIONS, SLOPES, ELEVATIONS WERE DERIVED FROM OTHER SOURCES. ACCEPTANCE OF THIS DRAWING IS AN AGREEMENT TO THE ABOVE.

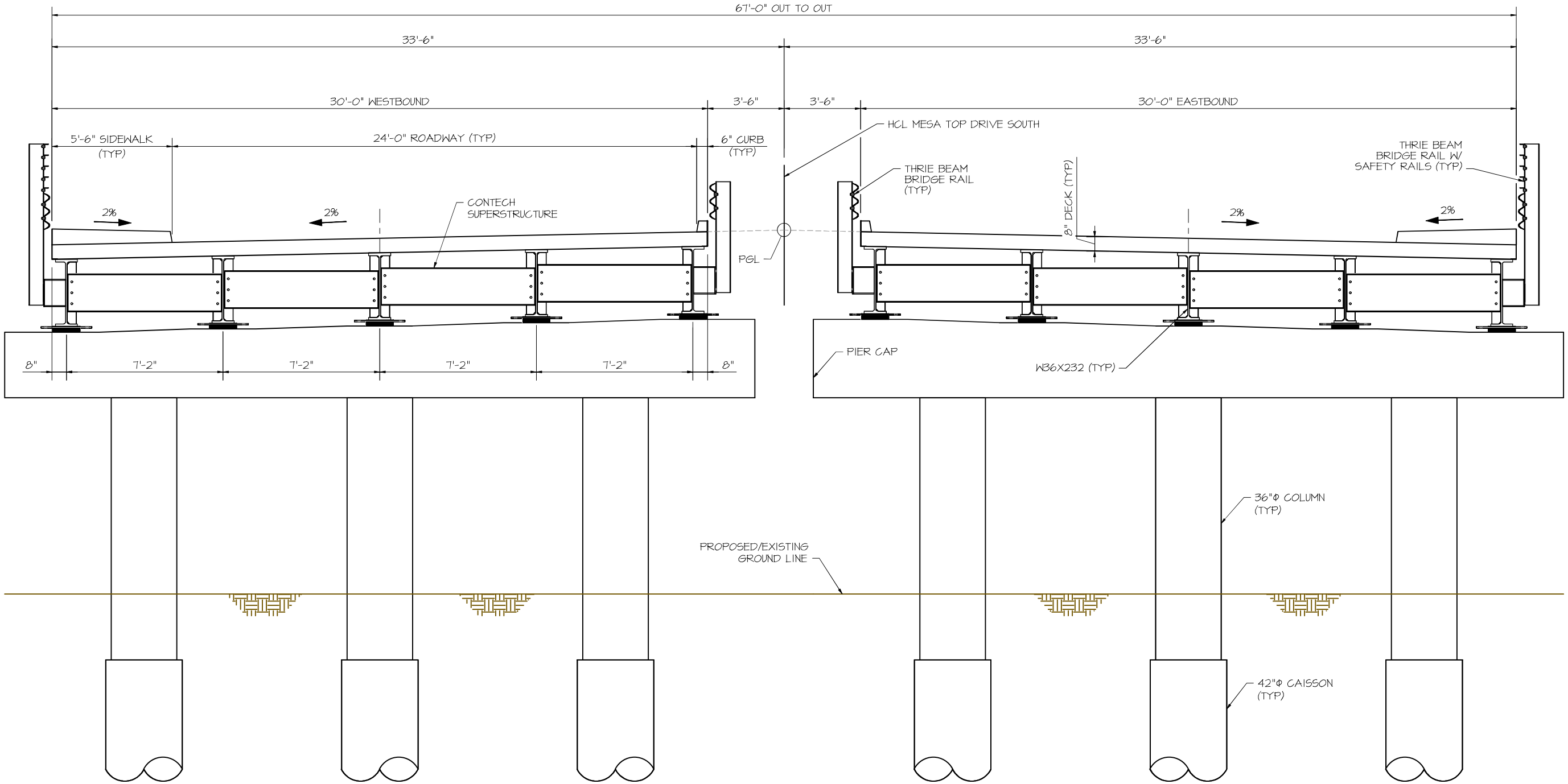

TYPICAL SECTION

(LOOKING AHEAD STATION)
(NORMAL TO HCL)

NOTES:

1. REFER TO CONTECH'S PLANS FOR INFORMATION REGARDING SUPERSTRUCTURE.

AS-BUILT/
CONSTRUCTED

COLORADO REGISTERED PROFESSIONAL ENGINEER
HEATHER MARIE RAEF
49431
07-12-22

	REVISIONS	DATE	BY
1	REVISED BEARING PAD DEPTH	05-19-21	HMR
2			
3			
4			
5			
6			
7			

PREPARED FOR:

STRUCTURES
CLASSIC HOMES

STEAMBOAT STRUCTURES

DESIGNED BY:	HMR
DRAWN BY:	AJM
PROJECT MANAGER:	HMR
DATE:	7/12/22

PROJECT TITLE: FOREST LAKES BRIDGES

PROJECT LOCATION: MONUMENT, CO

TYPICAL SECTION

STRUCT/JOB:

SHEET NO. B04

THIS DRAWING (HARD COPY AND/OR ELECTRONIC FILE), INCLUDING THE PRINCIPLES OF DESIGN, IS THE PROPERTY OF THE ORIGINATOR OF THIS DOCUMENT AND IS SUBMITTED WITH THE AGREEMENT THAT IT IS NOT TO BE ALTERED, REPRODUCED, COPIED OR LOANED, IN PART OR WHOLE. IT IS NOT TO BE USED IN ANY MANNER THAT MAY BE A DETRIMENT TO ITS ORIGINATOR. USE THIS ELECTRONIC FILE AT YOUR OWN RISK WITH NO LIABILITY TO THE ORIGINATOR FOR ANY INACCURACIES OR INCOMPATIBILITIES. SEE THE LATEST ORIGINAL. ALL DATA IS GRAPHICAL IN NATURE, AND IS FOR INFORMATION PURPOSES ONLY. ALL DIMENSIONS, SLOPES, ELEVATIONS WERE DERIVED FROM OTHER SOURCES. ACCEPTANCE OF THIS DRAWING IS AN AGREEMENT TO THE ABOVE.

AS-BUILT/
CONSTRUCTED

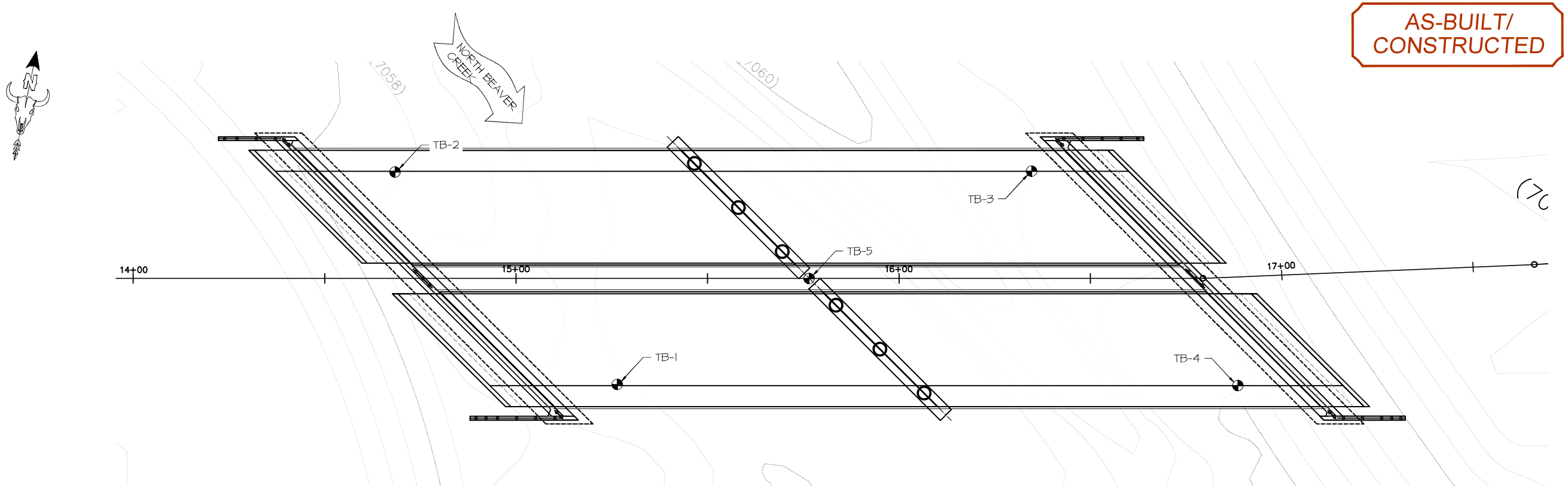

PLAN

TEST BORING NO. 1
DATE DRILLED 1/22/2020
Job # 200150

TEST BORING NO. 2
DATE DRILLED 1/22/2020
CLIENT FLRD
LOCATION N. BEAVER CREEK BRIDGE

REMARKS

WATER @ 10', 1/28/20

SAND, GRAVELLY, SLIGHTLY SILTY, FINE TO COARSE GRAINED, BROWN TO RED BROWN, VERY DENSE TO MEDIUM DENSE, DRY TO WET

SANDSTONE, SILTY, FINE TO COARSE GRAINED, RED BROWN, VERY DENSE, MOIST

* - HIGH BLOW COUNTS TO GRAVEL

* - BULK SAMPLE TAKEN

B - BOUNCE

Depth (ft)	Samples	Blows per foot	Watercontent %	Soil Type
		**	1.2	1
5		**	5.1	1
10		50* 9"	4.9	1
15		20	10.9	1
20		50 4"	13.9	2
25		B	16.5	2
30		50 4"	10.3	2

REMARKS

WATER @ 13', 1/27/20

SAND, VERY SILTY TO SILTY, FINE TO COARSE GRAINED, BROWN TO RED BROWN, MEDIUM DENSE, MOIST

SANDSTONE, VERY SILTY TO SILTY, FINE TO COARSE GRAINED, RED BROWN, VERY DENSE, MOIST

Depth (ft)	Samples	Blows per foot	Watercontent %	Soil Type
		12	2.9	1
5		20	8.4	1
10		18	3.4	1
15		50 6"	12.0	2
20		50 5"	14.4	2
25		50 5"	19.5	2
30		50 4"	15.7	2

ENTECH ENGINEERING, INC.
505 ELKTON DRIVE
COLORADO SPRINGS, COLORADO 80907

TEST BORING LOG

DRAWN	DATE	CHECKED	DATE
		HMR	8-10-20

JOB NO. 200150
FIG NO. A- 1

TEST BORING NO. 3
DATE DRILLED 1/22/2020
Job # 200150

TEST BORING NO. 4
DATE DRILLED 1/22/2020
CLIENT FLRD
LOCATION N. BEAVER CREEK BRIDGE

REMARKS

WATER @ 19.5', 1/28/20

SAND, GRAVELLY, SILTY, FINE TO COARSE GRAINED, BROWN TO RED BROWN, LOOSE TO MEDIUM DENSE, DRY TO WET

COBBLES

SANDSTONE, SILTY TO CLAYEY, FINE TO COARSE GRAINED, RED BROWN, VERY DENSE, MOIST

* - BULK SAMPLE TAKEN

Depth (ft)	Samples	Blows per foot	Watercontent %	Soil Type
		9	5.3	1
5		19	2.5	1
10		27	1.5	1
15		*	8.2	1
20		9	17.8	1
25		50 4"	11.6	2
30		50 4"	11.0	2
35		50 4"	14.4	2

REMARKS

WATER @ 19', 1/28/20

SAND, GRAVELLY, SILTY TO SLIGHTLY SILTY, FIN TO COARSE GRAINED, BROWN, MEDIUM DENSE, MOIST TO DRY

COBBLES

WEATHERED TO FORMATIONA SANDSTONE, SILTY, FINE TO COARSE GRAINED, RED BROWN, DENSE TO VERY DENSE, MOIST

* - BULK SAMPLE TAKEN

Depth (ft)	Samples	Blows per foot	Watercontent %	Soil Type
		13	4.7	1
5		20	3.0	1
10		*	1.8	1
15		*	1.8	1
20		11	12.1	2
25		50 4"	13.2	2
30		50 4"	10.9	2
35				

* - BULK SAMPLE TAKEN

ENTECH ENGINEERING, INC.
505 ELKTON DRIVE
COLORADO SPRINGS, COLORADO 80907

TEST BORING LOG

DRAWN	DATE	CHECKED	DATE
		HMR	8-10-20

JOB NO. 200150
FIG NO. A- 2

TEST BORING NO. 5
DATE DRILLED 7/22/2020
Job # 200150

TEST BORING NO.
DATE DRILLED
CLIENT FLRD
LOCATION N. BEAVER CREEK BRIDGE

REMARKS

WATER @ 18', 7/28/20

SAND, SILTY WITH COBBLES, FINE TO COARSE GRAINED, BROWN, VERY DENSE TO DENSE, DRY

COBBLES

HIGHLY WEATHERED TO FORMATIONAL SANDSTONE, SILTY, FINE TO COARSE GRAINED, RED BROWN, MEDIUM DENSE TO VERY DENSE, MOIST TO WET

* - BULK SAMPLE TAKEN

Depth (ft)	Samples	Blows per foot	Watercontent %	Soil Type
		50 8"	1.6	1
5		39	3.2	1
10		50 11"	2.2	1
15		*	4.4	1
20		21	13.0	2
25		50 1"	16.1	2
30		50 1"	14.9	2

ENTECH ENGINEERING, INC.
505 ELKTON DRIVE
COLORADO SPRINGS, COLORADO 80907

TEST BORING LOG

DRAWN	DATE	CHECKED	DATE
		HMR	8-10-20

JOB NO. 200150
FIG NO. A- 3

THE GEOTECHNICAL DATA SHOWN IS PROVIDED FOR INFORMATION ONLY AND WAS PERFORMED BY ENTECH ENGINEERING, INC. ENTECH JOB NO. 200150. REFER TO THE FULL GEOTECHNICAL REPORT FOR ALL INFORMATION PERTAINING TO BRIDGE GEOTECHNICAL DATA.

COLORADO REGISTERED
HEATHER MARIE ROSS
49431
PROFESSIONAL ENGINEER

07-12-22

	REVISIONS	DATE	BY
1			
2			
3			
4			
5			
6			
7			

PREPARED FOR:

STRUCTURES

CLASSIC HOMES

DESIGNED BY: ENTECH
DRAWN BY: AJM
PROJECT MANAGER: HMR
DATE: 7/12/22

PROJECT TITLE: FOREST LAKES BRIDGES

PROJECT LOCATION: MONUMENT, CO

ENGINEERING GEOLOGY

STRUCT/JOB:

SHEET NO. B05

THIS DRAWING (HARD COPY AND/OR ELECTRONIC FILE), INCLUDING THE PRINCIPLES OF DESIGN, IS THE PROPERTY OF THE ORIGINATOR OF THIS DOCUMENT AND IS SUBMITTED WITH THE AGREEMENT THAT IT IS NOT TO BE ALTERED, REPRODUCED, COPIED OR LOANED, IN PART OR WHOLE. IT IS NOT TO BE USED IN ANY MANNER THAT MAY BE A DETRIMENT TO ITS ORIGINATOR. USE THIS ELECTRONIC FILE AT YOUR OWN RISK WITH NO LIABILITY TO THE ORIGINATOR FOR ANY INACCURACIES OR INCOMPATIBILITIES. SEE THE LATEST ORIGINAL. ALL DATA IS GRAPHICAL IN NATURE, AND IS FOR INFORMATION PURPOSES ONLY. ALL DIMENSIONS, SLOPES, ELEVATIONS WERE DERIVED FROM OTHER SOURCES. ACCEPTANCE OF THIS DRAWING IS AN AGREEMENT TO THE ABOVE.

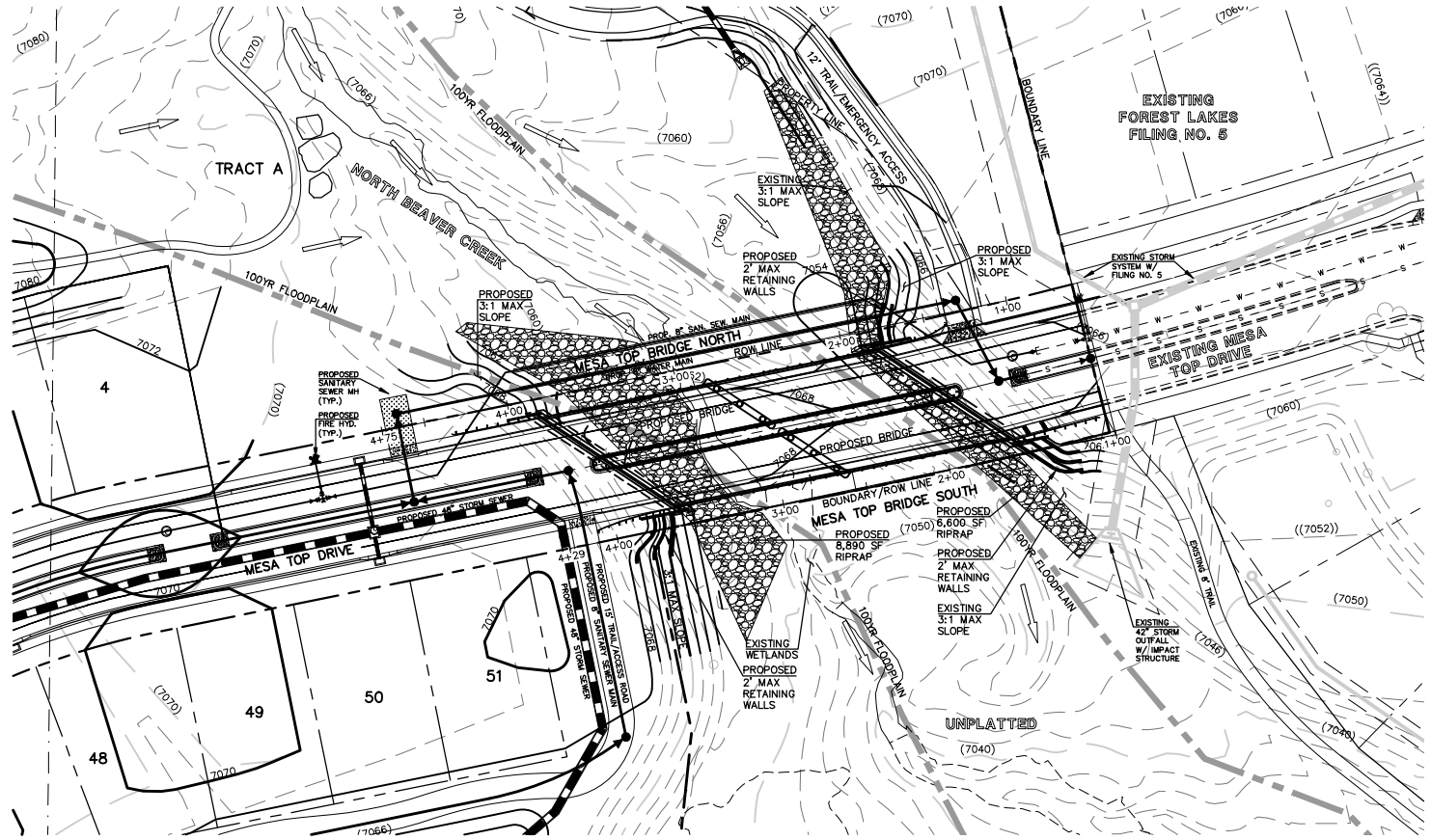

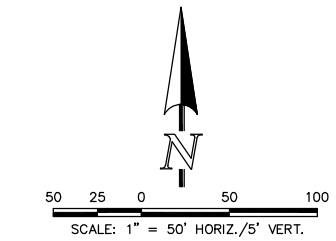

CHANNEL DESCRIPTION

BOTTOM MATERIAL – COHESIVE ☐ NON COHESIVE ☒
BOTTOM MATERIAL SIZE – CLAY ☐ SILT ☒ SAND ☒ GRAVEL ☐ COBBLES ☐ OTHER _____

STREAM FORM – STRAIGHT ☒ MEANDERING ☐ BRAIDED ☐
MANNINGS "n" FOR DESIGN – CHANNEL 0.04 OVERBANK 0.10
DEBRIS – BRUSH ☒ TREES/LOGS ☐ ICE ☐ OTHER _____

COMPARISON OF HYDRAULICS

FOR DESIGN DISCHARGE (100 YR Q= 3,123 CFS)

	VELOCITY	FREEBOARD	BRIDGE LOSS
NATURAL CHANNEL	8.8 ft/s	N/A	N/A
PROPOSED CHANNEL	5.7 ft/s	4.58 ft*	1.66 ft

*MEASURED AT 25' UPSTREAM OF BRIDGE FACE
MINIMUM FREEBOARD REQUIRED FOR LOW-DEBRIS STREAM = 2.26'

NOTE: PROFILES ARE DRAWN LOOKING DOWNSTREAM.
PLAN VIEW SHOWN TRUE NORTH.
CHANNEL FLOWS TO THE SOUTH.

MESA TOP DRIVE BRIDGE (NORTH BRIDGE HCL)
(LOOKING DOWNSTREAM)

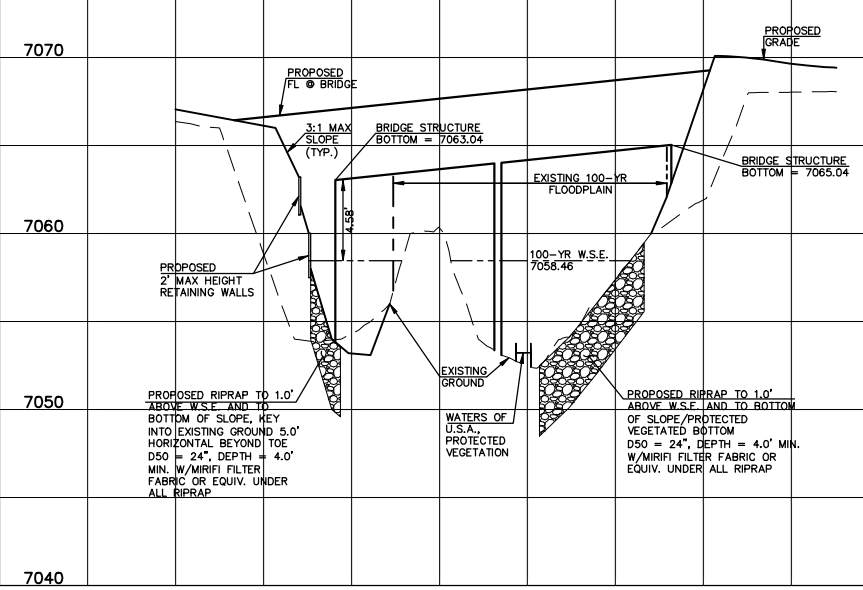

MESA TOP DRIVE BRIDGE (SOUTH BRIDGE HCL)
(LOOKING DOWNSTREAM)

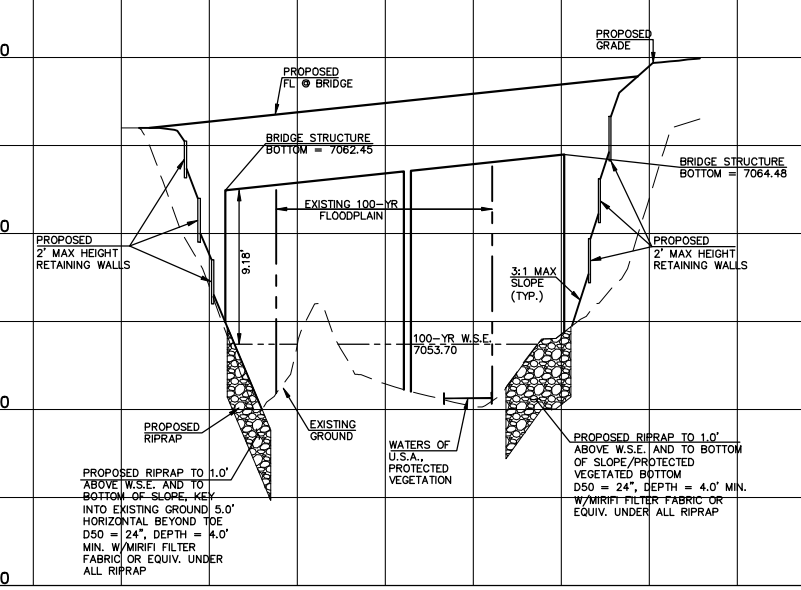

48 HOURS BEFORE YOU DIG,
CALL UTILITY LOCATORS
811
UTILITY NOTIFICATION CENTER OF COLORADO
IT'S THE LAW

THE LOCATIONS OF EXISTING UNDERGROUND UTILITIES ARE SHOWN IN AN APPROXIMATE WAY ONLY. THE CONTRACTOR SHALL DETERMINE THE EXACT LOCATION OF ALL EXISTING UTILITIES BEFORE COMMENCING WORK. THE CONTRACTOR SHALL BE FULLY RESPONSIBLE FOR ANY AND ALL DAMAGES WHICH MIGHT BE CAUSED BY HIS FAILURE TO EXACTLY LOCATE AND PRESERVE ANY AND ALL UNDERGROUND UTILITIES.

NO.	REVISION	DATE

REVIEW:

PREPARED UNDER MY DIRECT SUPERVISION FOR AND ON BEHALF OF CLASSIC CONSULTING ENGINEERS AND SURVEYORS, LLC

KYLE R. CAMPBELL, COLORADO P.E. #29794 DATE

CLASSIC CONSULTING
619 N. Cascade Avenue, Suite 200 (719)785-0790
Colorado Springs, Colorado 80903 (719)785-0799(Fax)

FOREST LAKES FILING NO. 6
BRIDGE HYDRAULIC INFORMATION
MESA TOP DRIVE OVER NORTH BEAVER CREEK

DESIGNED BY	MAL	SCALE		DATE	12/22/20
DRAWN BY	MES	(H) 1"= 50'		SHEET 1	OF 1
CHECKED BY		(V) 1"= 5'		JOB NO.	1175.60

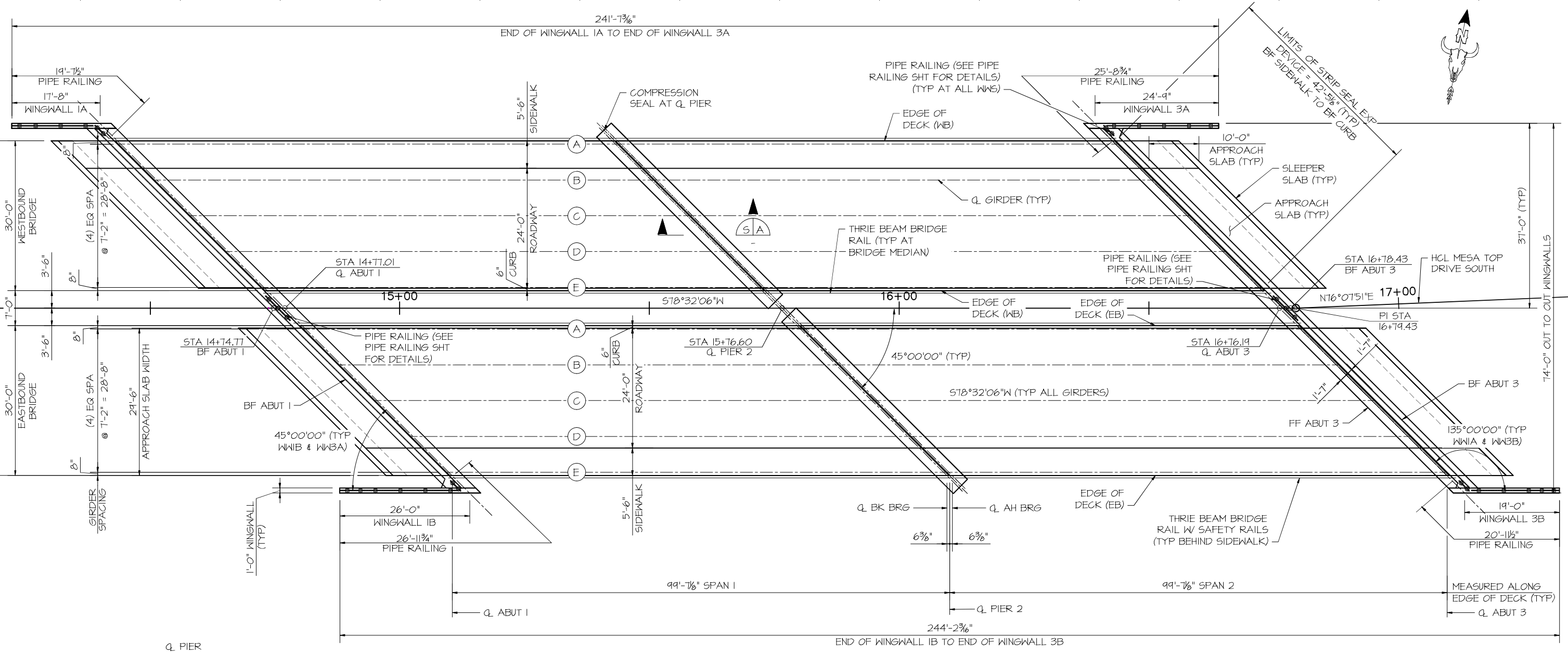

CONSTRUCTION LAYOUT

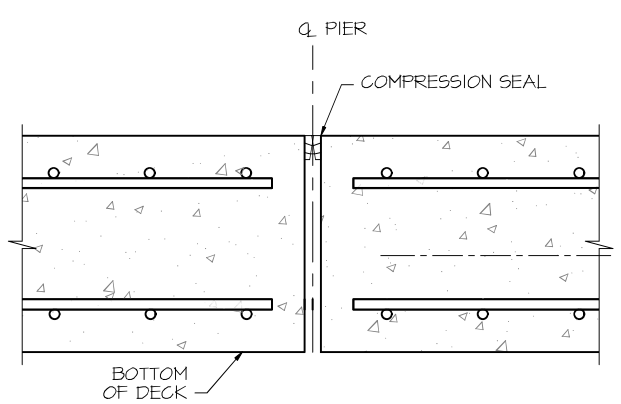

DECK JOINT SECTION (S|A)

NOTES:

1. REFER TO CONTECH PLANS FOR INFORMATION REGARDING ALL DIMENSIONS, BEARINGS, DIAPHRAGMS, ANCHOR BOLTS, AND BRIDGE RAIL DETAILS.
2. REFER TO CIVIL PLANS FOR GUARDRAIL INFORMATION AT ALL 4 OUTSIDE CORNERS & MEDIAN.

AS-BUILT/ CONSTRUCTED

COLORADO REGISTERED PROFESSIONAL ENGINEER 49431 — 07-12-22

	REVISIONS	DATE	BY
1	REVISED BEARING PAD DEPTH	05-19-21	HMR
2			
3			
4			
5			
6			
7			

PREPARED FOR: STRUCTURES / CLASSIC HOMES

STEAMBOAT STRUCTURES

DESIGNED BY: HMR
DRAWN BY: AJM
PROJECT MANAGER: HMR
DATE: 7/12/22

PROJECT TITLE: FOREST LAKES BRIDGES
PROJECT LOCATION: MONUMENT, CO
CONSTRUCTION LAYOUT
STRUCT/JOB:
SHEET NO. B07

THIS DRAWING (HARD COPY AND/OR ELECTRONIC FILE), INCLUDING THE PRINCIPLES OF DESIGN, IS THE PROPERTY OF THE ORIGINATOR OF THIS DOCUMENT AND IS SUBMITTED WITH THE AGREEMENT THAT IT IS NOT TO BE ALTERED, REPRODUCED, COPIED OR LOANED, IN PART OR WHOLE. IT IS NOT TO BE USED IN ANY MANNER THAT MAY BE A DETRIMENT TO ITS ORIGINATOR. USE THIS ELECTRONIC FILE AT YOUR OWN RISK WITH NO LIABILITY TO THE ORIGINATOR FOR ANY INACCURACIES OR INCOMPATIBILITIES. SEE THE LATEST ORIGINAL, ALL DATA IS GRAPHICAL IN NATURE, AND IS FOR INFORMATION PURPOSES ONLY. ALL DIMENSIONS, SLOPES, ELEVATIONS WERE DERIVED FROM OTHER SOURCES. ACCEPTANCE OF THIS DRAWING IS AN AGREEMENT TO THE ABOVE.

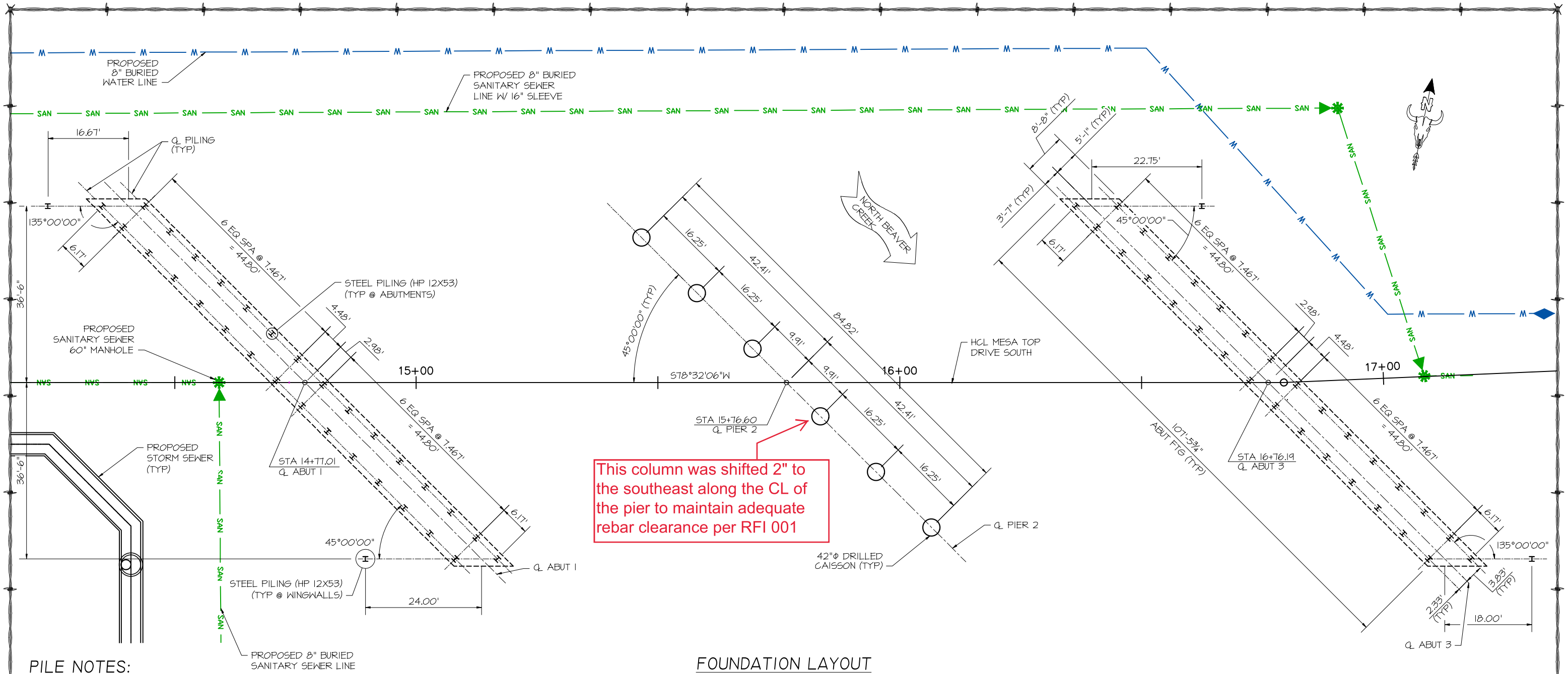

FOUNDATION LAYOUT

PILE NOTES:

1. PILES ARE ORIENTED SUCH THAT THE STRONG AXIS IS PARALLEL TO THE CENTERLINE OF THE ABUTMENT OR WINGWALL AS SHOWN.
2. PILE FIELD SPLICES, IF REQUIRED, SHALL BE MADE WITH COMPLETE JOINT PENETRATION (CJP) WELDS IN ACCORDANCE WITH CDOT STANDARD PROVISION OF SECTION 502 - EXTENSIONS AND SPLICES.
3. ONLY COMPLETE JOINT PENETRATION (CJP) WELDS SHALL BE USED FOR PILE SPLICES.
4. PILE TIP TO BE INCLUDED IN THE COST OF THE PILE.
5. ALL PILES ARE END BEARING AND SHALL BE DRIVEN VERTICAL.
6. PILE DRIVING ANALYZER (PDA) IS REQUIRED FOR THIS PROJECT. THE PDA MONITORING SHALL BE PERFORMED ON ONE PILE AT EACH ABUTMENT IN ACCORDANCE WITH SECTION 502 OF THE STANDARD SPECIFIGATIONS.
7. ALL STEEL PILES SHALL BE AASHTO M270 GRADE 50 AND PROTECTED WITH AN APPROVED COMMERCIAL PILE TIP.
8. ELEVATIONS SHOWN SHALL BE VERIFIED AT TIME OF CONSTRUCTION BY THE GEOTECHNICAL ENGINEER.
9. AXIAL GEOTECHINCAL RESISTANCE FACTOR = 0.65.

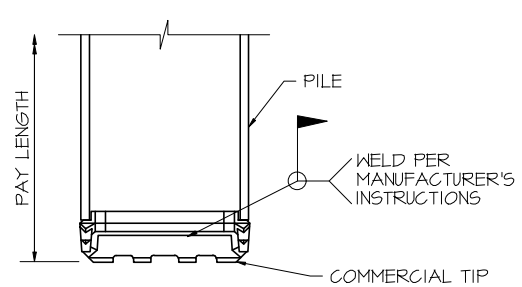

REINFORCING TIP LAYOUT

PILE SUMMARY

	PILE SIZE	MAX LOAD (FACTORED) (KIPS)	MAX LOAD (SERVICE) (KIPS)	CUTOFF ELEVATION	ESTIMATED BEDROCK ELEV	ESTIMATED TIP ELEV	MINMUM REQ'D TIP ELEV	AS-BUILT TIP ELEV*
WINGWALL 1A	HP 12x53	28	22	7055	7045	7035	7035	7035.55
WINGWALL 1B	HP 12x53	40	32	7055	7038	7028	7028	7032.53
ABUTMENT 1	HP 12x53	215	158	7054	7038-7045	7028-7035	7028-7035	7031.94 - 7039.31
WINGWALL 3A	HP 12x53	38	30	7055	7034	7024	7024	7029.29
WINGWALL 3B	HP 12x53	29	23	7055	7038	7028	7028	7022.4
ABUTMENT 3	HP 12x53	200	150	7054	7034-7038	7024-7028	7024-7028	7026.38 - 7030.92

Per the pile driller, piles were embeded +/- 3' into bedrock. Piles were driven until the N count = 120 blows.

AS-BUILT/ CONSTRUCTED

Know what's below. Call before you dig.

COLORADO REGISTERED PROFESSIONAL ENGINEER 49431 — 07-12-22

	REVISIONS	DATE	BY
1	REVISED BEARING PAD DEPTH	05-19-21	HMR
2			
3			
4			
5			
6			
7			

PREPARED FOR: STRUCTURES / CLASSIC HOMES

STEAMBOAT STRUCTURES

DESIGNED BY: HMR
DRAWN BY: AJM
PROJECT MANAGER: HMR
DATE: 7/12/22

PROJECT TITLE: FOREST LAKES BRIDGES
PROJECT LOCATION: MONUMENT, CO

FOUNDATION LAYOUT

STRUCT/JOB:
SHEET NO. B08

THIS DRAWING (HARD COPY AND/OR ELECTRONIC FILE), INCLUDING THE PRINCIPLES OF DESIGN, IS THE PROPERTY OF THE ORIGINATOR OF THIS DOCUMENT AND IS SUBMITTED WITH THE AGREEMENT THAT IT IS NOT TO BE ALTERED, REPRODUCED, COPIED OR LOANED, IN PART OR WHOLE. IT IS NOT TO BE USED IN ANY MANNER THAT MAY BE A DETRIMENT TO ITS ORIGINATOR. USE THIS ELECTRONIC FILE AT YOUR OWN RISK WITH NO LIABILITY TO THE ORIGINATOR FOR ANY INACCURACIES OR INCOMPATIBILITIES. SEE THE LATEST ORIGINAL. ALL DATA IS GRAPHICAL IN NATURE, AND IS FOR INFORMATION PURPOSES ONLY. ALL DIMENSIONS, SLOPES, ELEVATIONS WERE DERIVED FROM OTHER SOURCES. ACCEPTANCE OF THIS DRAWING IS AN AGREEMENT TO THE ABOVE.

CAISSON NOTES:

1. MINIMUM EMBEDMENT TO BE PROVIDED. BEDROCK ELEVATIONS MAY VARY.
2. 2" DIA CSL TUBES SHALL BE SCHEDULE 40 STEEL PIPE WITH TIGHT END CAPS. CSL TUBES SHALL BE SECURED TO REINFORCEMENT AND FILLED WITH WATER AND CAPPED PRIOR TO CONCRETE PLACEMENT.
3. CSL TESTING SHALL BE PERFORMED ON 100% OF PIER 2 CAISSONS.
4. CONTRACTOR SHALL VERIFY THAT FOUNDATION LOCATIONS DO NOT INTERFERE WITH ANY EXISTING OR PROPOSED UTILITIES.
5. ALL TIES AND VERTICAL REINFORCEMENT IN CAISSONS ARE NON-EPOXY COATED.
6. ~~CAISSON REINFORCING SHALL EXTEND TO FULL DEPTH OF DRILLED HOLE.~~ 1
7. DRILLED CAISSON CONCRETE IS CLASS BZ.
8. MINIMUM LENGTH OF CAISSON SHALL BE 29.91' FOR EB BRIDGE, 30.56' FOR WB BRIDGE.
9. CONCRETE SHOULD BE PLACED IN THE CAISSON IMMEDIATELY AFTER DRILLING AND MUST BE PLACED THE SAME DAY THE HOLES ARE DRILLED.
10. THE MAXIMUM PERMISSIBLE VARIATION OF THE CENTER AXIS OF ANY DRILLED CAISSON AT THE TOP FROM IT'S PLANNED LOCATION SHALL BE 3 INCHES.
11. REFER TO THE GEOTECHNICAL REPORT FOR GROUND WATER AND POTENTIAL CAVING SOIL CONDITIONS. THE CONTRACTOR SHOULD BE PREPARED TO DE-WATER DRILLED CAISSONS AND TO CONSTRUCT CAISSONS WITH TEMPORARY CASINGS TO CONTROL GROUNDWATER AND MAINTAIN A STABLE OPEN EXCAVATION.
12. REFER TO THE GEOTECHNICAL REPORT FOR SHEAR RING INFORMATION AND REQUIREMENTS.
13. END BEARING & SIDE RESISTANCE FACTOR = 0.60

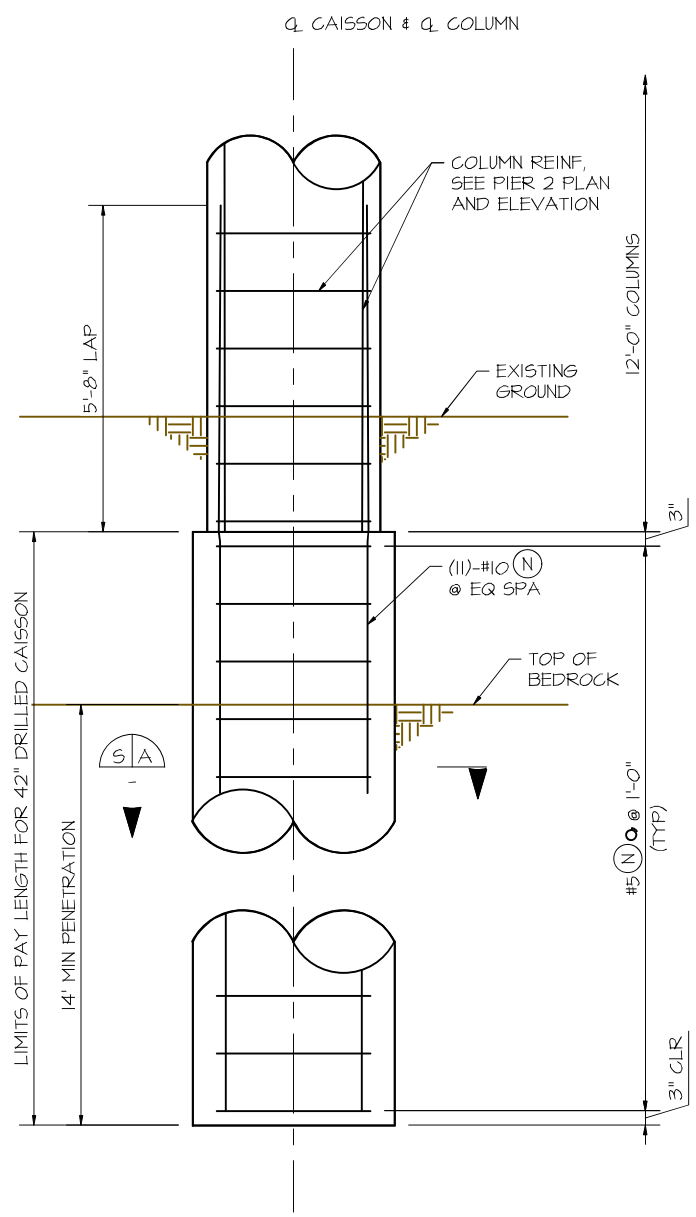

CAISSON ELEVATION

DRILLED CAISSON SUMMARY		
	WESTBOUND PIER CAISSONS	EASTBOUND PIER CAISSONS
MAX FACTORED AXIAL	740	740
~~MAX SERVICE AXIAL~~	~~502~~	~~502~~ 1
TOP OF CAISSON	7049.06	7048.41
~~ESTIMATED BEDROCK ELEV~~	~~7032.50~~	~~7032.50~~
MIN BEDROCK PENETRATION	14.0'	14.0'
ESTIMATED TIP ELEV	7018.50	7018.50
SCOUR ELEV	7047.76	7047.76
AS-BUILT BEDROCK ELEV	7031.7-7032.4	7032.3-7032.8
AS-BUILT TIP ELEV	7017-7017.5	7018.1-7018.4

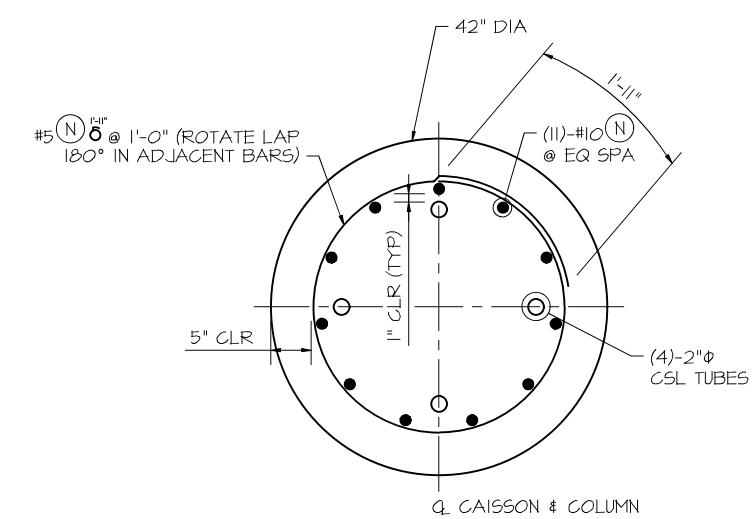

CAISSON SECTION S A

AS-BUILT/ CONSTRUCTED

COLORADO REGISTERED PROFESSIONAL ENGINEER HEATHER MARIE RAEF 49431

07-12-22

	REVISIONS	DATE	BY
1	REVISED BEARING PAD DEPTH	05-19-21	HMR
2			
3			
4			
5			
6			
7			

PREPARED FOR: STRUCTURES CLASSIC HOMES

STEAMBOAT STRUCTURES

DESIGNED BY: HMR
DRAWN BY: AJM
PROJECT MANAGER: HMR
DATE: 7/12/22

PROJECT TITLE: FOREST LAKES BRIDGES
PROJECT LOCATION: MONUMENT, CO

CAISSON DETAILS

STRUCT/JOB:
SHEET NO. B09

THIS DRAWING (HARD COPY AND/OR ELECTRONIC FILE), INCLUDING THE PRINCIPLES OF DESIGN, IS THE PROPERTY OF THE ORIGINATOR OF THIS DOCUMENT AND IS SUBMITTED WITH THE AGREEMENT THAT IT IS NOT TO BE ALTERED, REPRODUCED, COPIED OR LOANED, IN PART OR WHOLE. IT IS NOT TO BE USED IN ANY MANNER THAT MAY BE A DETRIMENT TO ITS ORIGINATOR. USE THIS ELECTRONIC FILE AT YOUR OWN RISK WITH NO LIABILITY TO THE ORIGINATOR FOR ANY INACCURACIES OR INCOMPATIBILITIES. SEE THE LATEST ORIGINAL. ALL DATA IS GRAPHICAL IN NATURE, AND IS FOR INFORMATION PURPOSES ONLY. ALL DIMENSIONS, SLOPES, ELEVATIONS WERE DERIVED FROM OTHER SOURCES. ACCEPTANCE OF THIS DRAWING IS AN AGREEMENT TO THE ABOVE.

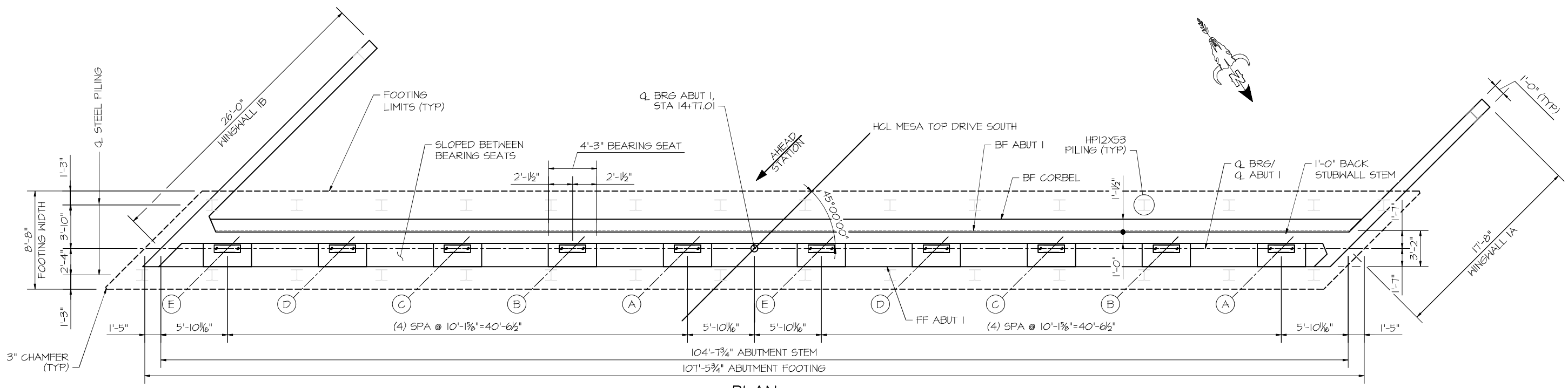

PLAN

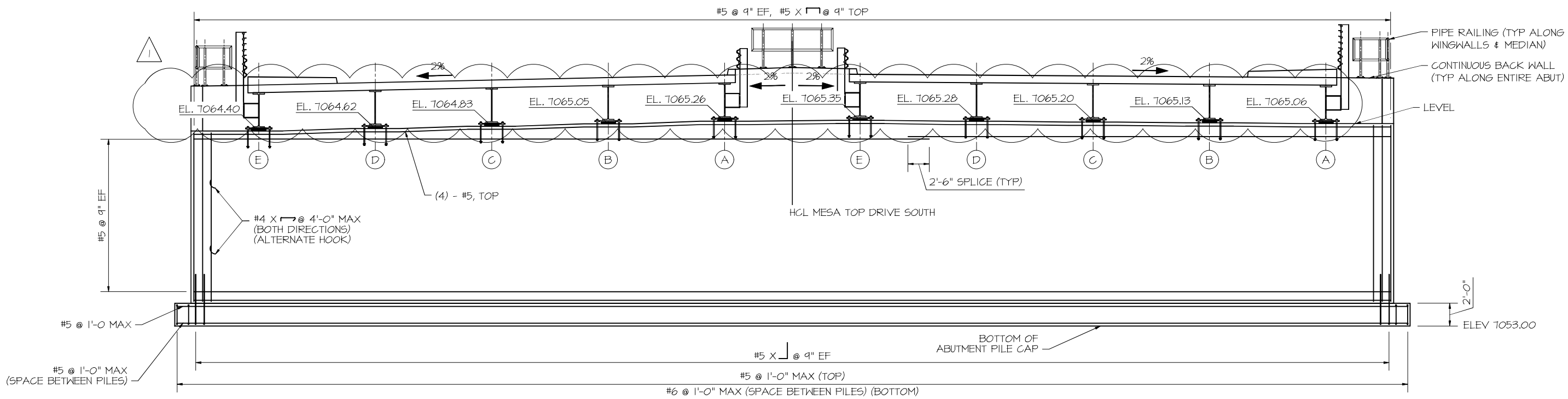

ELEVATION

(H-PILES NOT SHOWN FOR CLARITY)
(LOOKING BACK STATION)

NOTES:

1. REFER TO CONTECH'S PLANS FOR SUPERSTRUCTURE DIMENSIONS AND DETAILS. SUPERSTRUCTURE SHOWN FOR INFORMATION ONLY.
2. ABUTMENT SHALL BE CONCRETE CLASS D (BRIDGE).
3. SEAT ELEVATIONS ARE PROVIDED ON THE CONTECH PLANS. SEAT ELEVATIONS ARE AT CENTERLINE OF BEARING AND CENTERLINE OF GIRDER AT TOP OF CONCRETE.
4. THERE ARE 2 ANCHOR BOLTS PER GIRDER BEARING PLATE. TOTAL 20 ANCHOR BOLTS FOR ABUTMENT 1.

AS-BUILT/ CONSTRUCTED

COLORADO REGISTERED PROFESSIONAL ENGINEER
HEATHER MARIE RAST
49431
07-12-22

	REVISIONS	DATE	BY
1	REVISED BEARING PAD DEPTH	05-19-21	HMR
2			
3			
4			
5			
6			
7			

PREPARED FOR: STRUCTURES / CLASSIC HOMES

STEAMBOAT STRUCTURES

DESIGNED BY: HMR
DRAWN BY: AJM
PROJECT MANAGER: HMR
DATE: 7/12/22

PROJECT TITLE: FOREST LAKES BRIDGES
PROJECT LOCATION: MONUMENT, CO

ABUTMENT 1 PLAN AND ELEVATION

STRUCT./JOB:
SHEET NO. B10

THIS DRAWING (HARD COPY AND/OR ELECTRONIC FILE), INCLUDING THE PRINCIPLES OF DESIGN, IS THE PROPERTY OF THE ORIGINATOR OF THIS DOCUMENT AND IS SUBMITTED WITH THE AGREEMENT THAT IT IS NOT TO BE ALTERED, REPRODUCED, COPIED OR LOANED, IN PART OR WHOLE. IT IS NOT TO BE USED IN ANY MANNER THAT MAY BE A DETRIMENT TO ITS ORIGINATOR. USE THIS ELECTRONIC FILE AT YOUR OWN RISK WITH NO LIABILITY TO THE ORIGINATOR FOR ANY INACCURACIES OR INCOMPATIBILITIES. SEE THE LATEST ORIGINAL. ALL DATA IS GRAPHICAL IN NATURE, AND IS FOR INFORMATION PURPOSES ONLY. ALL DIMENSIONS, SLOPES, ELEVATIONS WERE DERIVED FROM OTHER SOURCES. ACCEPTANCE OF THIS DRAWING IS AN AGREEMENT TO THE ABOVE.

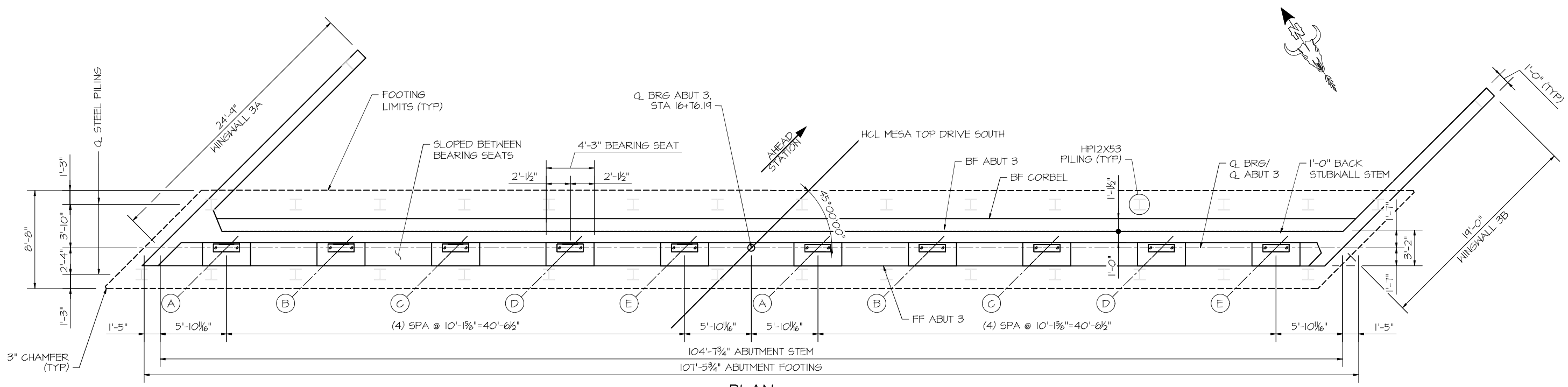

PLAN

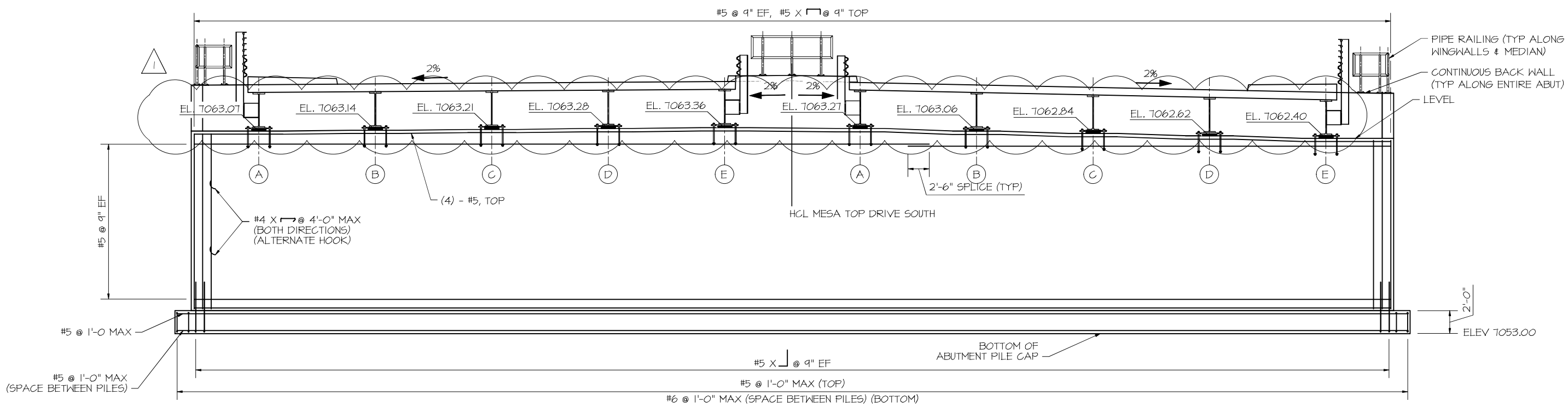

ELEVATION

(H-PILES NOT SHOWN FOR CLARITY)
(LOOKING AHEAD STATION)

NOTES:

1. REFER TO CONTECH'S PLANS FOR SUPERSTRUCTURE DIMENSIONS AND DETAILS. SUPERSTRUCTURE SHOWN FOR INFORMATION ONLY.
2. ABUTMENT SHALL BE CONCRETE CLASS D (BRIDGE).
3. SEAT ELEVATIONS ARE PROVIDED ON THE CONTECH PLANS. SEAT ELEVATIONS ARE AT CENTERLINE OF BEARING AND CENTERLINE OF GIRDER AT TOP OF CONCRETE.
4. THERE ARE 2 ANCHOR BOLTS PER GIRDER BEARING PLATE. TOTAL 20 ANCHOR BOLTS FOR ABUTMENT 3.

AS-BUILT/
CONSTRUCTED

COLORADO REGISTERED PROFESSIONAL ENGINEER
HEATHER MARIE RAEF
49431
07-12-22

	REVISIONS	DATE	BY
1	REVISED BEARING PAD DEPTH	05-19-21	HMR
2			
3			
4			
5			
6			
7			

PREPARED FOR:
STRUCTURES
CLASSIC HOMES

STEAMBOAT STRUCTURES

DESIGNED BY: HMR
DRAWN BY: AJM
PROJECT MANAGER: HMR
DATE: 7/12/22

PROJECT TITLE: FOREST LAKES BRIDGES
PROJECT LOCATION: MONUMENT, CO
STRUCT/JOB:
ABUTMENT 3 PLAN AND ELEVATION
SHEET NO. B11

THIS DRAWING (HARD COPY AND/OR ELECTRONIC FILE), INCLUDING THE PRINCIPLES OF DESIGN, IS THE PROPERTY OF THE ORIGINATOR OF THIS DOCUMENT AND IS SUBMITTED WITH THE AGREEMENT THAT IT IS NOT TO BE ALTERED, REPRODUCED, COPIED OR LOANED, IN PART OR WHOLE. IT IS NOT TO BE USED IN ANY MANNER THAT MAY BE A DETRIMENT TO ITS ORIGINATOR. USE THIS ELECTRONIC FILE AT YOUR OWN RISK WITH NO LIABILITY TO THE ORIGINATOR FOR ANY INACCURACIES OR INCOMPATIBILITIES. SEE THE LATEST ORIGINAL. ALL DATA IS GRAPHICAL IN NATURE, AND IS FOR INFORMATION PURPOSES ONLY. ALL DIMENSIONS, SLOPES, ELEVATIONS WERE DERIVED FROM OTHER SOURCES. ACCEPTANCE OF THIS DRAWING IS AN AGREEMENT TO THE ABOVE.

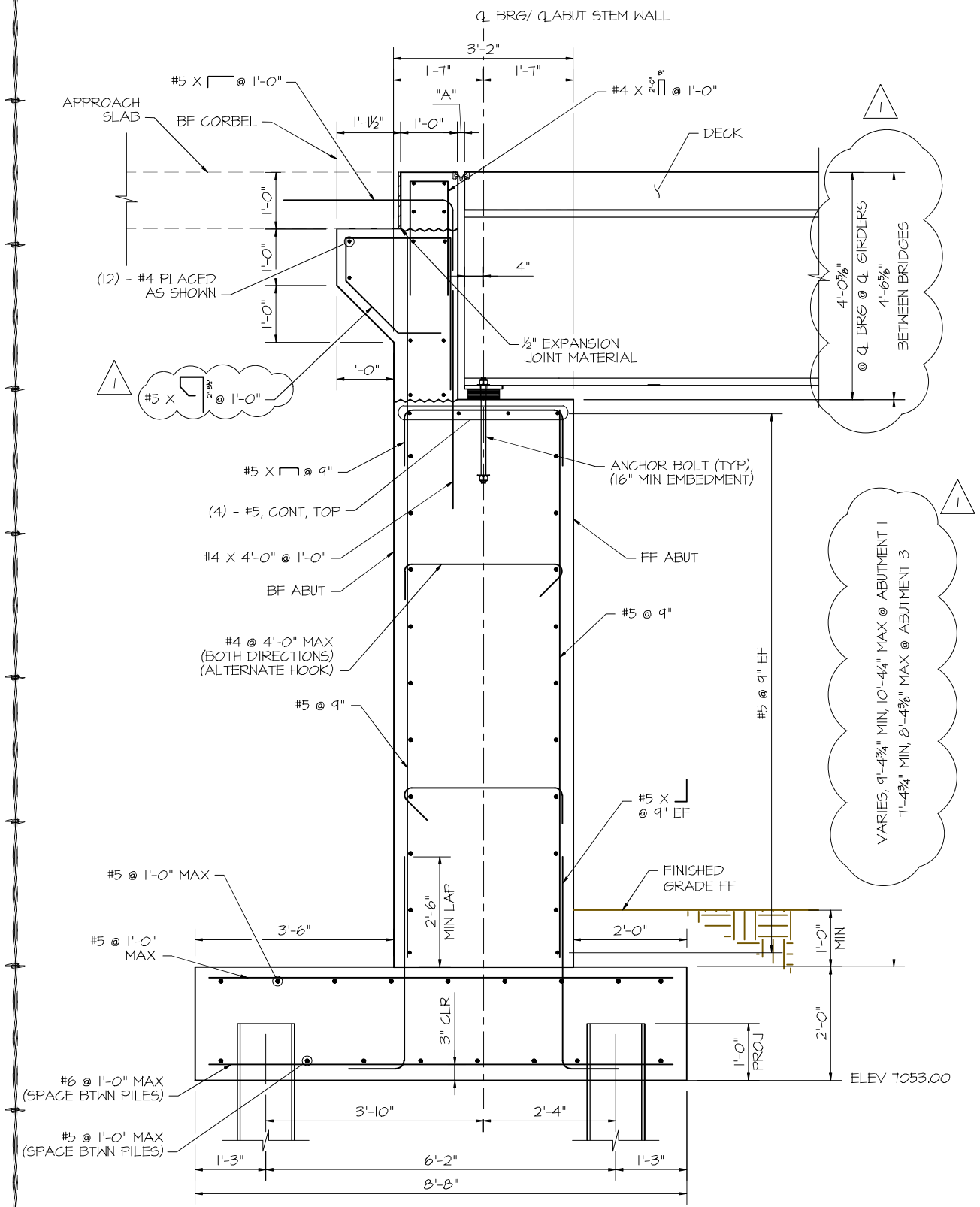

TYPICAL ABUTMENT SECTION

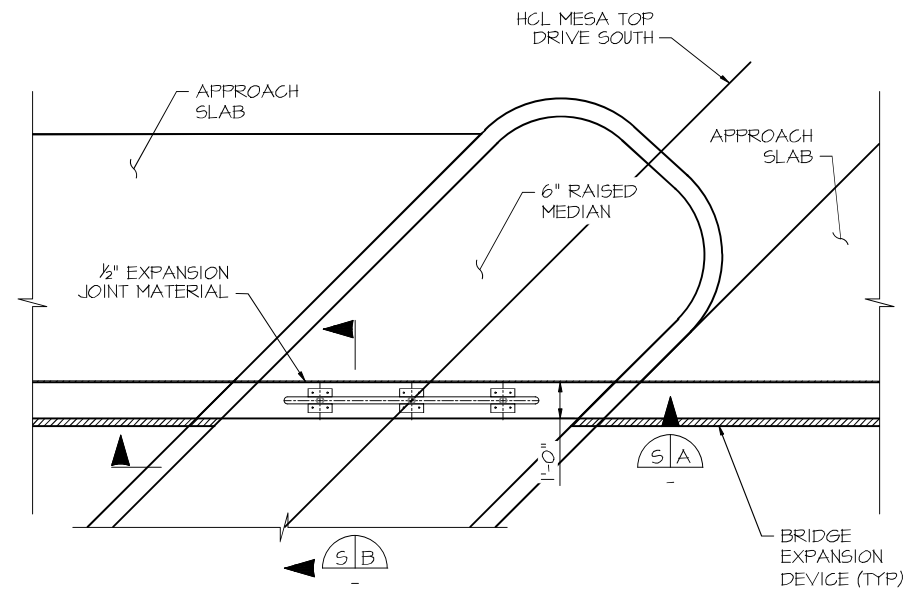

PLAN

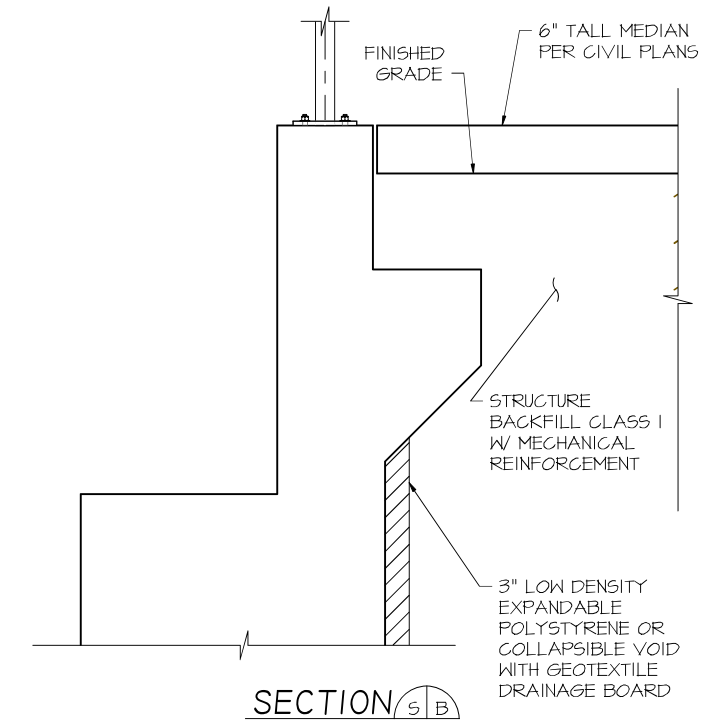

SECTION S B

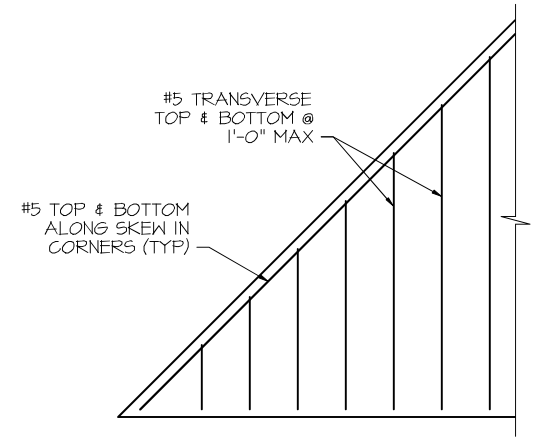

FOOTING ACUTE CORNER PLAN

LONGITUDINAL FOOTING BARS NOT SHOWN FOR CLARITY.

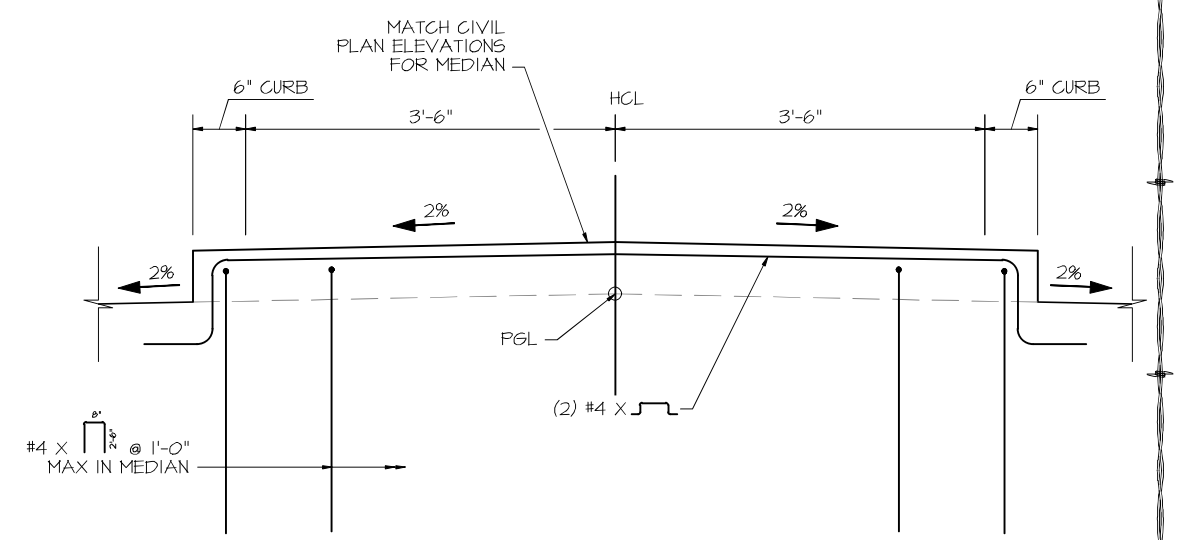

MEDIAN BACK STUBWALL ELEVATION S A

AS-BUILT/ CONSTRUCTED

NOTES:

1. SLOPE TOP OF BEARING SEAT TOWARDS FRONT FACE AT 2% BETWEEN BEARING SEATS.

COLORADO REGISTERED PROFESSIONAL ENGINEER 49431 HEATHER MARIE RAUK

07-12-22

REVISIONS		DATE	BY
1	REVISED BEARING PAD DEPTH	05-19-21	HMR
2			
3			
4			
5			
6			
7			

PREPARED FOR: STRUCTURES CLASSIC HOMES

STEAMBOAT STRUCTURES

DESIGNED BY: HMR
DRAWN BY: AJM
PROJECT MANAGER: HMR
DATE: 7/12/22

PROJECT TITLE: FOREST LAKES BRIDGES

PROJECT LOCATION: MONUMENT, CO

ABUTMENT DETAILS

STRUCT JOB:

SHEET NO. B12

THIS DRAWING (HARD COPY AND/OR ELECTRONIC FILE), INCLUDING THE PRINCIPLES OF DESIGN, IS THE PROPERTY OF THE ORIGINATOR OF THIS DOCUMENT AND IS SUBMITTED WITH THE AGREEMENT THAT IT IS NOT TO BE ALTERED, REPRODUCED, COPIED OR LOANED, IN PART OR WHOLE. IT IS NOT TO BE USED IN ANY MANNER THAT MAY BE A DETRIMENT TO ITS ORIGINATOR. USE THIS ELECTRONIC FILE AT YOUR OWN RISK WITH NO LIABILITY TO THE ORIGINATOR FOR ANY INACCURACIES OR INCOMPATIBILITIES. SEE THE LATEST ORIGINAL. ALL DATA IS GRAPHICAL IN NATURE, AND IS FOR INFORMATION PURPOSES ONLY. ALL DIMENSIONS, SLOPES, ELEVATIONS WERE DERIVED FROM OTHER SOURCES. ACCEPTANCE OF THIS DRAWING IS AN AGREEMENT TO THE ABOVE.

AS-BUILT/
CONSTRUCTED

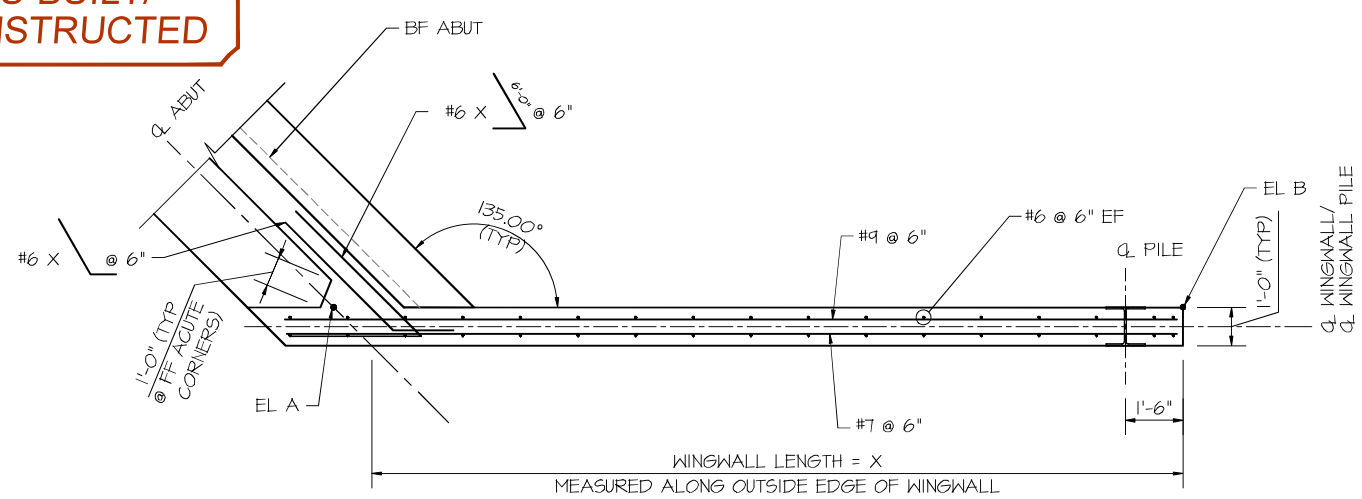

SECTION THRU BACK STUBWALL

WINGWALL 3B SHOWN
(WINGWALL 1A OPPOSITE HAND)

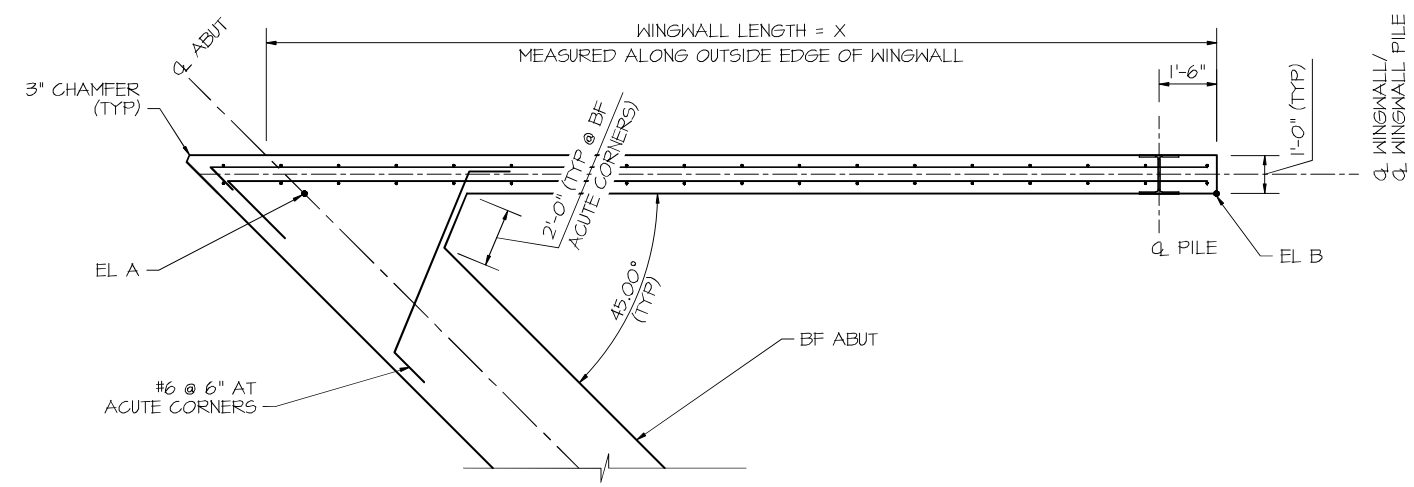

SECTION THRU ABUTMENT STEM

WINGWALL 3A SHOWN
(WINGWALL 1B OPPOSITE HAND)

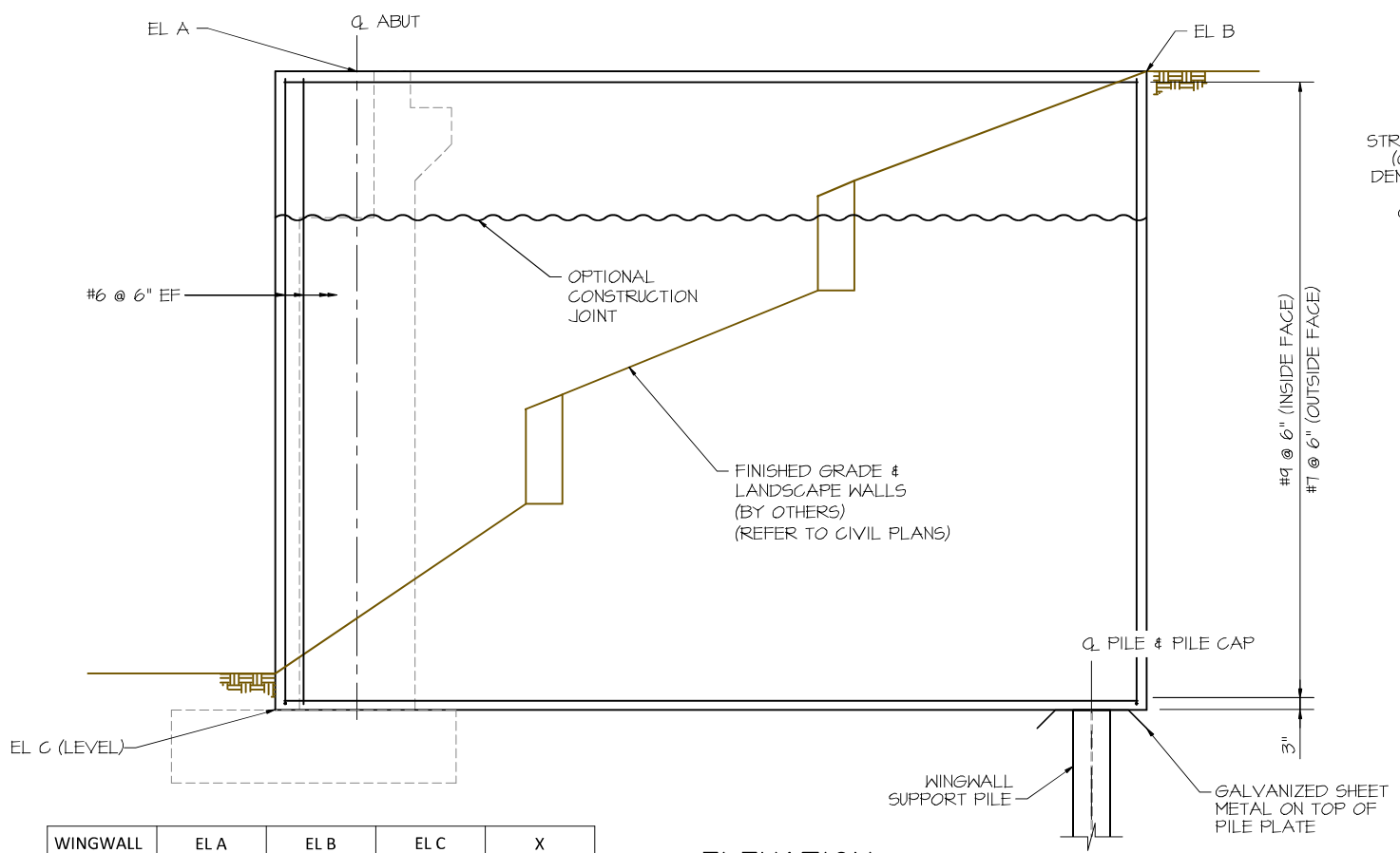

ELEVATION

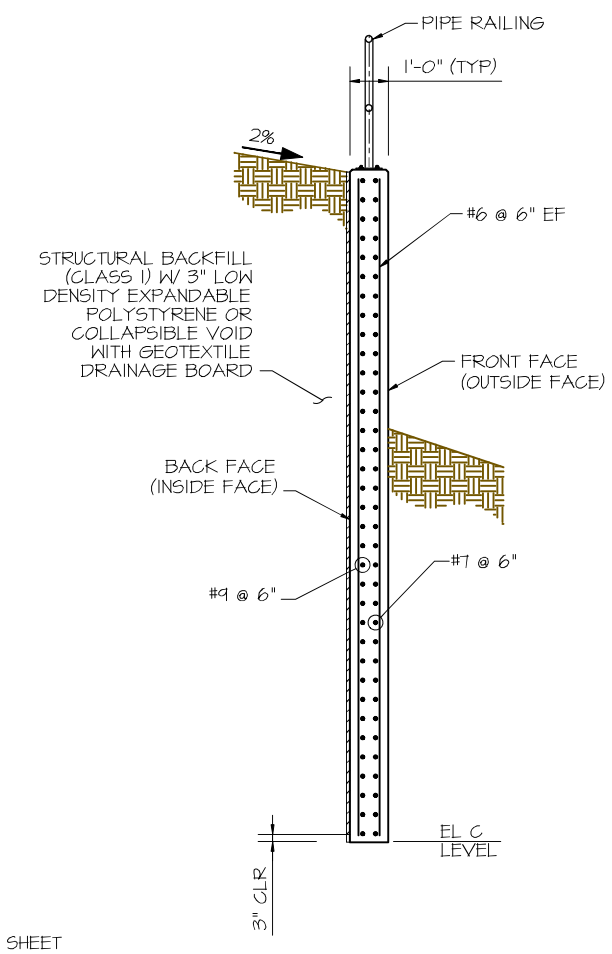

WINGWALL TYPICAL SECTION

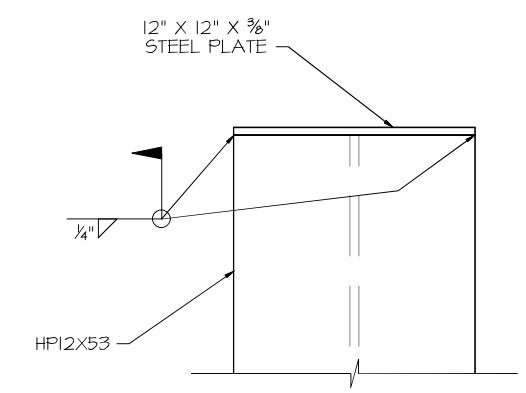

PILE PLATE DETAIL

NOTE: STEEL PLATE WILL NOT BE MEASURED AND PAID FOR SEPARATELY, BUT SHALL BE INCLUDED IN THE COST OF THE PILES. FOR WINGWALL SUPPORT PILE ONLY (4 PILES TOTAL).

WINGWALL	EL A	EL B	EL C	X
1A	7069.08	7069.20	7055.00	17'-8"
1B	7068.36	7068.61	7055.00	26'-0"
3A	7067.09	7066.85	7055.00	24'-9"
3B	7066.36	7066.05	7055.00	19'-0"

NOTES:

1. CHAMFER 1'-0" AT FF OF ACUTE CORNERS.
2. CHAMFER 2'-0" AT BF OF ACUTE CORNERS WITHIN STEM & STUBWALL. DO NOT CHAMFER CORBEL.

COLORADO REGISTERED PROFESSIONAL ENGINEER
HEATHER MARIE RAAF
49431
07-12-22

	REVISIONS	DATE	BY
1	REVISED BEARING PAD DEPTH	05-19-21	HMR
2			
3			
4			
5			
6			
7			

PREPARED FOR: STRUCTURES / CLASSIC HOMES

STEAMBOAT STRUCTURES

DESIGNED BY: HMR
DRAWN BY: AJM
PROJECT MANAGER: HMR
DATE: 7/12/22

PROJECT TITLE: FOREST LAKES BRIDGES
PROJECT LOCATION: MONUMENT, CO

WINGWALL DETAILS

STRUCT/JOB:
SHEET NO. B13

THIS DRAWING (HARD COPY AND/OR ELECTRONIC FILE), INCLUDING THE PRINCIPLES OF DESIGN, IS THE PROPERTY OF THE ORIGINATOR OF THIS DOCUMENT AND IS SUBMITTED WITH THE AGREEMENT THAT IT IS NOT TO BE ALTERED, REPRODUCED, COPIED OR LOANED, IN PART OR WHOLE. IT IS NOT TO BE USED IN ANY MANNER THAT MAY BE A DETRIMENT TO ITS ORIGINATOR. USE THIS ELECTRONIC FILE AT YOUR OWN RISK WITH NO LIABILITY TO THE ORIGINATOR FOR ANY INACCURACIES OR INCOMPATIBILITIES. SEE THE LATEST ORIGINAL. ALL DATA IS GRAPHICAL IN NATURE, AND IS FOR INFORMATION PURPOSES ONLY. ALL DIMENSIONS, SLOPES, ELEVATIONS WERE DERIVED FROM OTHER SOURCES. ACCEPTANCE OF THIS DRAWING IS AN AGREEMENT TO THE ABOVE.

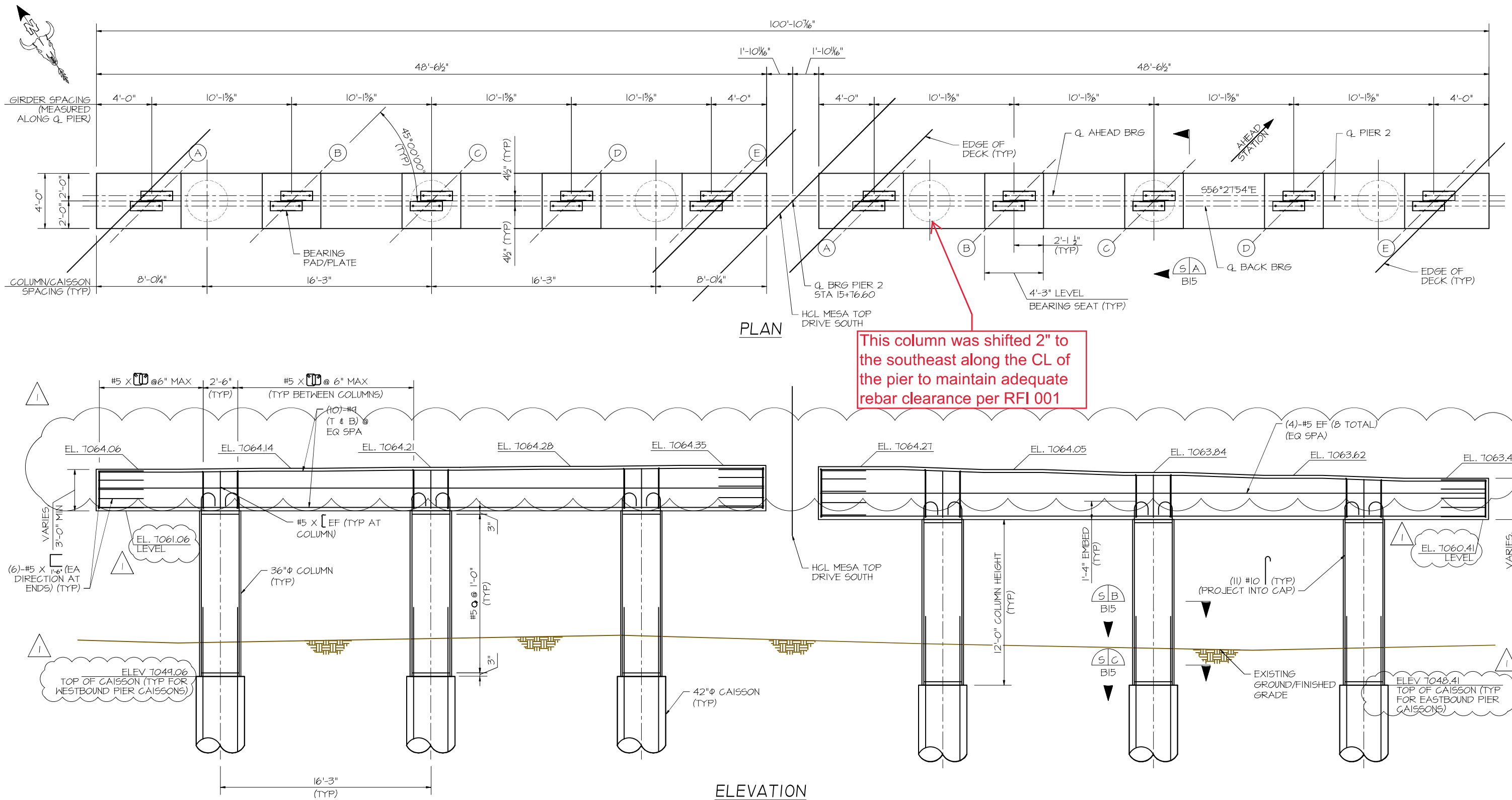

NOTES:

1. REFER TO CONTECH'S PLANS FOR BEARING PLATE/PAD INFORMATION.
2. THERE ARE 2 ANCHOR BOLTS PER GIRDER BEARING PLATE. 20 ANCHOR BOLTS PER PIER, 40 TOTAL FOR PIER 2.

AS-BUILT/ CONSTRUCTED

COLORADO REGISTERED PROFESSIONAL ENGINEER 49431

07-12-22

REVISIONS		DATE	BY
1	REVISED BEARING PAD DEPTH	05-19-21	HMR
2			
3			
4			
5			
6			
7			

PREPARED FOR: STRUCTURES / CLASSIC HOMES

STEAMBOAT STRUCTURES

DESIGNED BY: HMR
DRAWN BY: AJM
PROJECT MANAGER: HMR
DATE: 7/12/22

PROJECT TITLE: FOREST LAKES BRIDGES

PROJECT LOCATION: MONUMENT, CO

PIER 2 PLAN AND ELEVATION

STRUCT/JOB:

SHEET NO. B14

THIS DRAWING (HARD COPY AND/OR ELECTRONIC FILE), INCLUDING THE PRINCIPLES OF DESIGN, IS THE PROPERTY OF THE ORIGINATOR OF THIS DOCUMENT AND IS SUBMITTED WITH THE AGREEMENT THAT IT IS NOT TO BE ALTERED, REPRODUCED, COPIED OR LOANED, IN PART OR WHOLE. IT IS NOT TO BE USED IN ANY MANNER THAT MAY BE A DETRIMENT TO ITS ORIGINATOR. USE THIS ELECTRONIC FILE AT YOUR OWN RISK WITH NO LIABILITY TO THE ORIGINATOR FOR ANY INACCURACIES OR INCOMPATIBILITIES. SEE THE LATEST ORIGINAL. ALL DATA IS GRAPHICAL IN NATURE, AND IS FOR INFORMATION PURPOSES ONLY. ALL DIMENSIONS, SLOPES, ELEVATIONS WERE DERIVED FROM OTHER SOURCES. ACCEPTANCE OF THIS DRAWING IS AN AGREEMENT TO THE ABOVE.

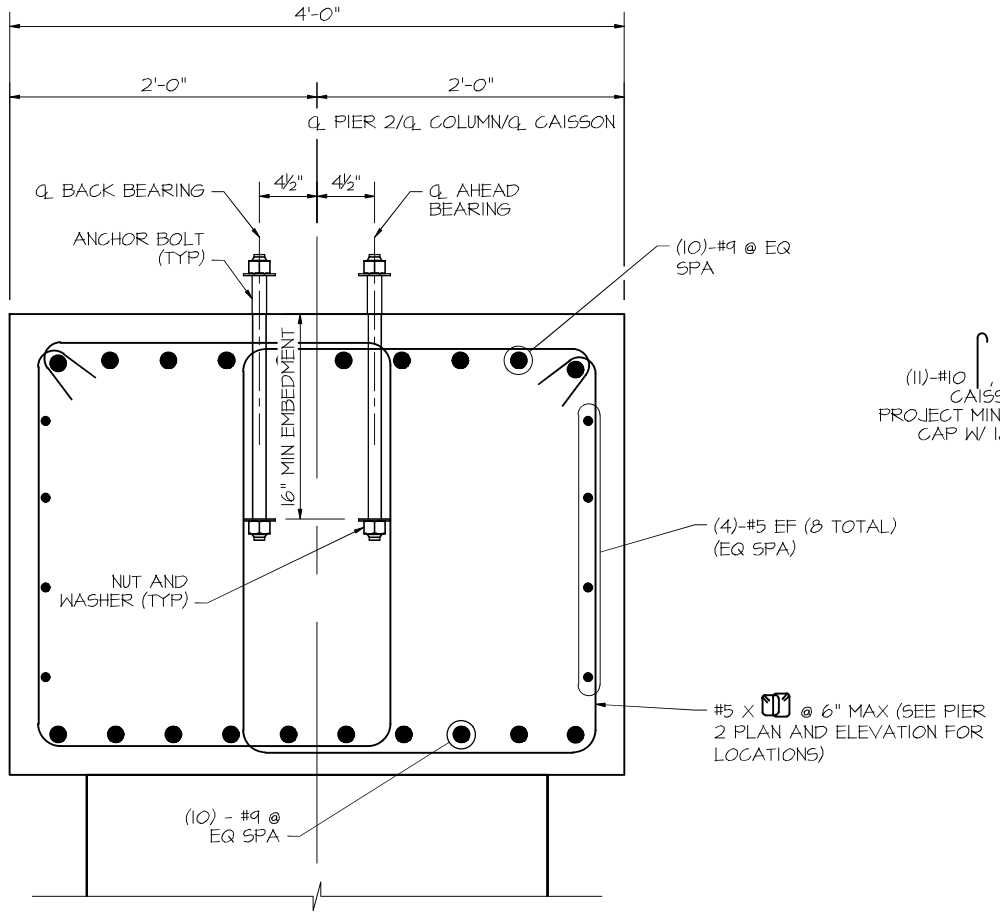

TYPICAL PIER CAP SECTION S A B14

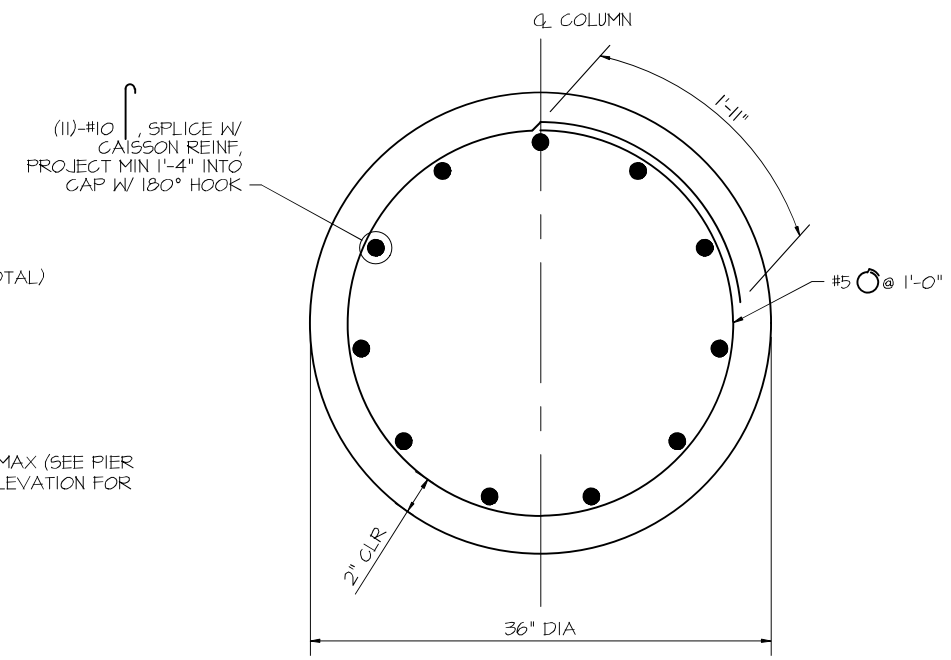

COLUMN SECTION S B B14

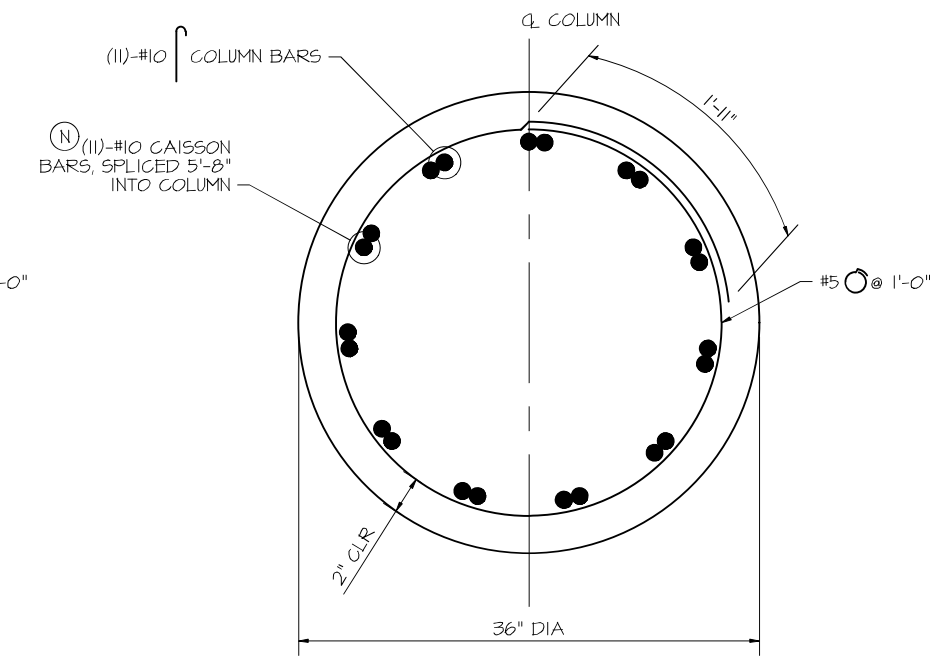

SPLICE SECTION S C B14

NOTES:

1. REFER TO CONTECH'S PLANS FOR ANCHOR BOLT LOCATIONS & INFORMATION.

AS-BUILT/ CONSTRUCTED

COLORADO REGISTERED PROFESSIONAL ENGINEER 49431

07-12-22

	REVISIONS	DATE	BY
1	REVISED BEARING PAD DEPTH	05-19-21	HMR
2			
3			
4			
5			
6			
7			

PREPARED FOR: STRUCTURES CLASSIC HOMES

STEAMBOAT STRUCTURES

DESIGNED BY: HMR
DRAWN BY: AJM
PROJECT MANAGER: HMR
DATE: 7/12/22

PROJECT TITLE: FOREST LAKES BRIDGES

PROJECT LOCATION: MONUMENT, CO

PIER DETAILS

STRUCT/JOB:

SHEET NO. B15

THIS DRAWING (HARD COPY AND/OR ELECTRONIC FILE), INCLUDING THE PRINCIPLES OF DESIGN, IS THE PROPERTY OF THE ORIGINATOR OF THIS DOCUMENT AND IS SUBMITTED WITH THE AGREEMENT THAT IT IS NOT TO BE ALTERED, REPRODUCED, COPIED OR LOANED, IN PART OR WHOLE. IT IS NOT TO BE USED IN ANY MANNER THAT MAY BE A DETRIMENT TO ITS ORIGINATOR. USE THIS ELECTRONIC FILE AT YOUR OWN RISK WITH NO LIABILITY TO THE ORIGINATOR FOR ANY INACCURACIES OR INCOMPATIBILITIES. SEE THE LATEST ORIGINAL. ALL DATA IS GRAPHICAL IN NATURE, AND IS FOR INFORMATION PURPOSES ONLY. ALL DIMENSIONS, SLOPES, ELEVATIONS WERE DERIVED FROM OTHER SOURCES. ACCEPTANCE OF THIS DRAWING IS AN AGREEMENT TO THE ABOVE.

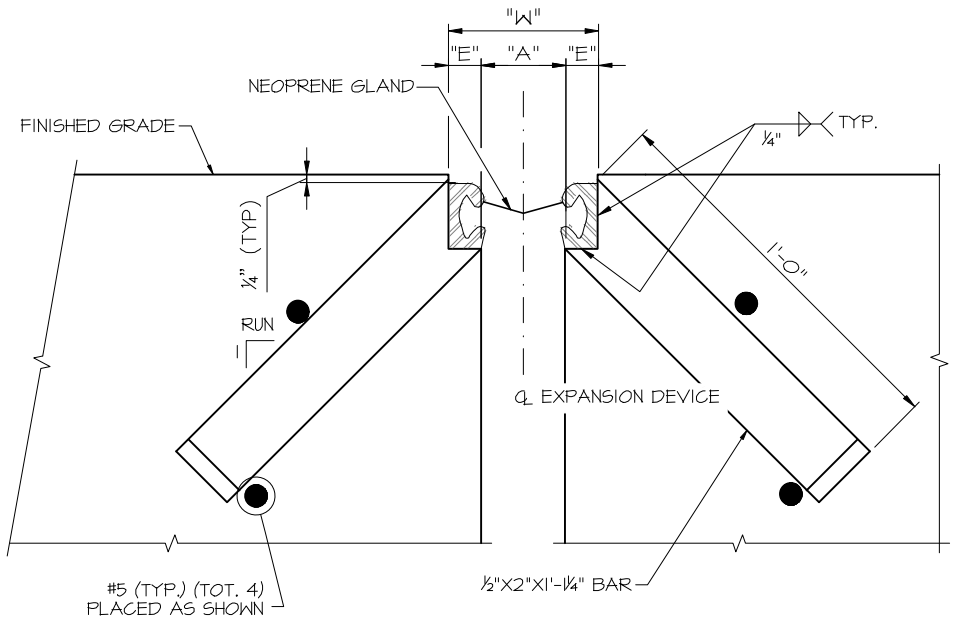

SECTION THRU STRIP SEAL BRIDGE EXPANSION

SECTION TAKEN PERPENDICULAR TO ℄ EXP'N DEVICE

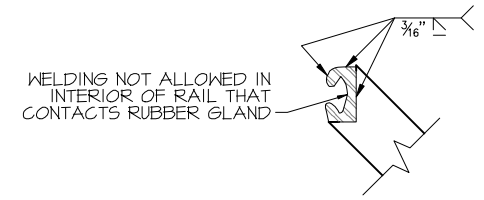

RAIL FIELD SPLICE DETAIL

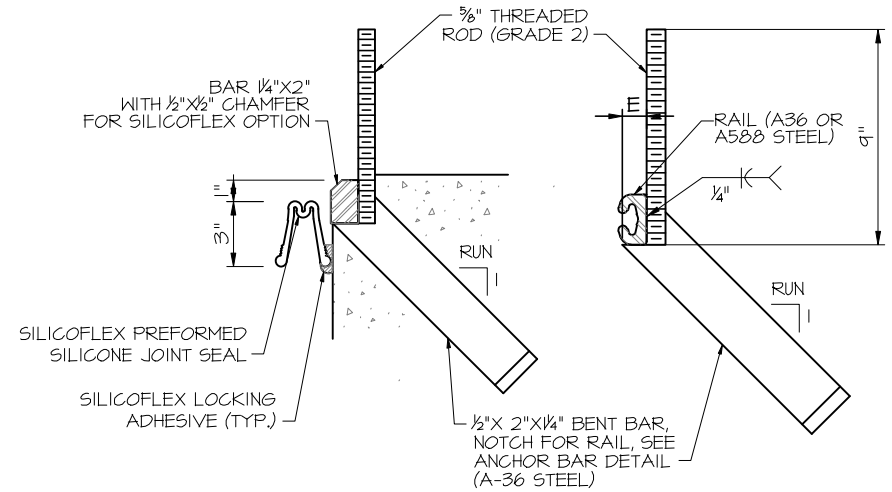

ANCHORAGE DETAIL

NOTES:

THE EXPANSION DEVICE SHALL BE INSTALLED ON GRADE, PARALLEL TO THE SLOPE AND GRADE OF THE DECK.

THE EXPANSION DEVICE SHALL NOT BE SET BEFORE THE DECK ELEVATIONS HAVE BEEN APPROVED BY THE ENGINEER. THE CONTRACTOR SHALL TAKE SHOTS OF THE EXPANSION DEVICE TO ACHIEVE THE REQUIRED ELEVATIONS FOR SMOOTHER RIDEABILITY ON BRIDGE APPROACHES.

AFTER THE CONCRETE HAS ATTAINED INITIAL SET, THE ATTACHMENTS USED TO HOLD THE EXPANSION DEVICE ASSEMBLY IN ITS PROPER POSITION SHALL BE REMOVED.

"W" AND "E" DIMENSIONS ARE DEPENDENT UPON THE PARTICULAR EXPANSION DEVICE SUPPLIED, AND SHALL BE SHOWN ON THE WORKING DRAWINGS.

SEE TABLE FOR DIMENSIONS "A" AND "W"; INTERPOLATE AS NEEDED. DO NOT INSTALL THE GLAND UNTIL DIMENSION "A" HAS OPENED UP TO AT LEAST ½" (2½" FOR SILICOFLEX).

THE NEOPRENE GLAND SHALL BE INSTALLED IN ONE PIECE IN ACCORDANCE WITH SECTION 518 OF THE STANDARD SPECIFICATIONS.

SEE SECTION 518.09 IN THE STANDARD SPECIFICATIONS FOR WATER TIGHT INTEGRITY TESTING REQUIREMENTS.

SET ELEVATIONS AT TOP OF END OF DECK AND BACK STUBWALL WITH THE GRADE PROJECTION SCHEME.

ALL STEEL ELEMENTS (WHETHER GRADE A36 OR A588) OF THE BRIDGE EXPANSION DEVICE, INCLUDING COVER PLATES, SHALL BE HOT DIP GALVANIZED AFTER FABRICATION AS PER SECTION 509.11 OF THE STANDARD SPECIFICATIONS.

USE A RUN OF 1 FOR NEW CONSTRUCTION.

PROVIDE EXPANSION DEVICE SUPPORT AS SHOWN AT 6'-0" INTERVALS.

FOR REINFORCING NOT SHOWN HEREON, SEE ABUTMENT DETAILS AND CONTECH PLANS.

CUT THREADED ROD FLUSH TO CONCRETE FOR FINISHED JOINT.

CONCRETE SHALL BE PLACED AFTER EXPANSION DEVICE HAS BEEN ADJUSTED TO PROPER GRADE AND APPROVED BY THE ENGINEER.

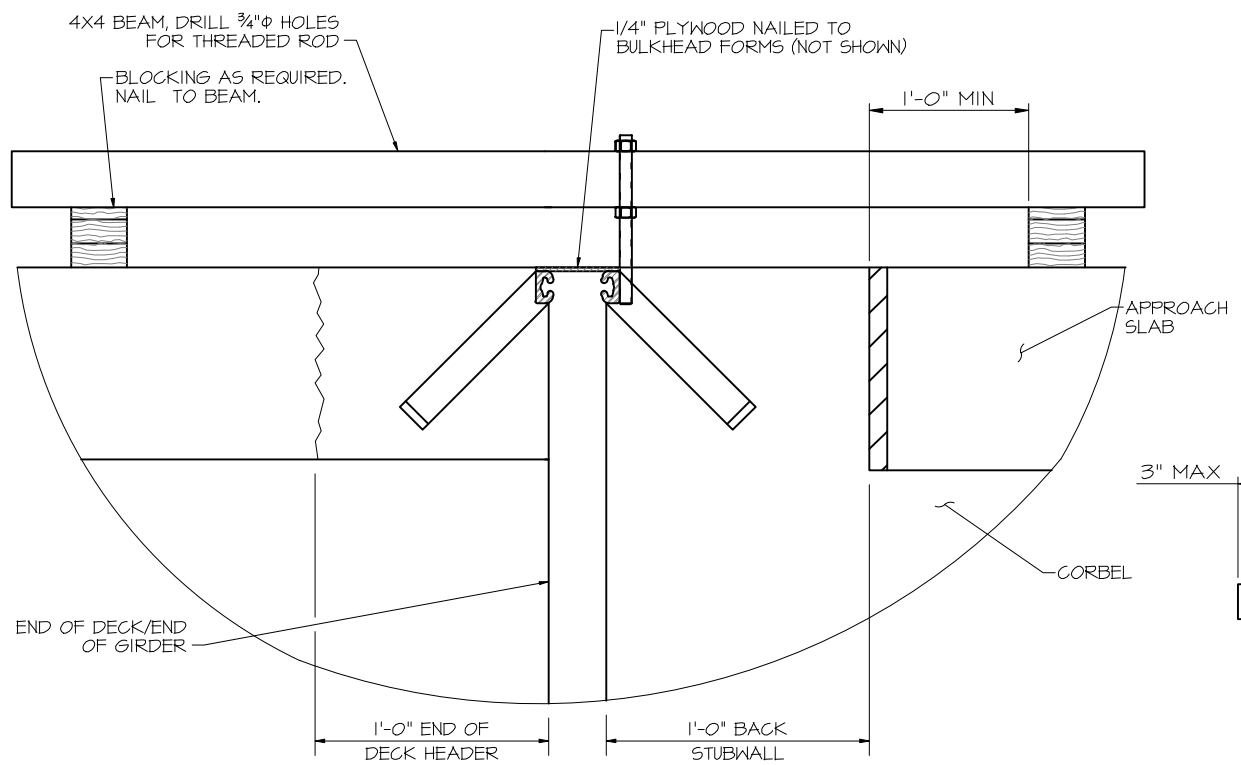

MINIMUM SUPPORT BRACKET REQUIREMENTS

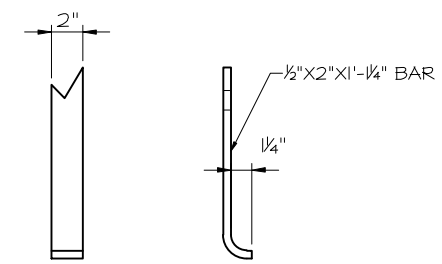

TYPICAL ANCHOR BAR DETAIL

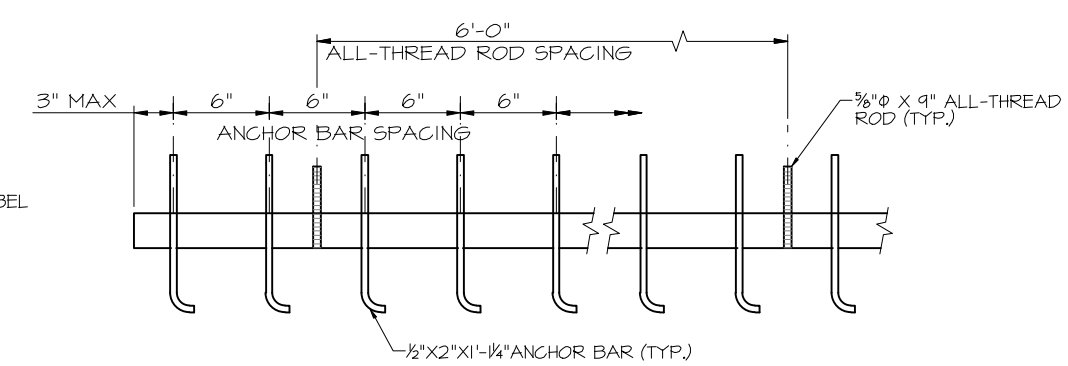

ANCHOR BAR SPACING

ACCEPTABLE EXPANSION DEVICE ALTERNATES

D.S. BROWN A2R400-SSA2WABO SE400 TYPE AEPOXY INDUSTRIES S400-A
R. J. WATSON SILICOFLEX SF 400

AIR TEMP (°F)	"A"	"W"*
-30	2.75	5.25
0	2.55	5.05
30	2.35	4.85
60	2.15	4.65
90	1.95	4.45
120	1.75	4.25

* FOR E = ¼" (MIN.)

AS-BUILT/
CONSTRUCTED

COLORADO REGISTERED PROFESSIONAL ENGINEER
HEATHER MARIE RAST
49431
07-12-22

	REVISIONS	DATE	BY
1	REVISED BEARING PAD DEPTH	05-19-21	HMR
2			
3			
4			
5			
6			
7			

PREPARED FOR: STRUCTURES CLASSIC HOMES

STEAMBOAT STRUCTURES

DESIGNED BY: HMR
DRAWN BY: AJM
PROJECT MANAGER: HMR
DATE: 7/12/22

PROJECT TITLE: FOREST LAKES BRIDGES

PROJECT LOCATION: MONUMENT, CO

BRIDGE EXPANSION DEVICE (1 OF 2)

STRUCT/JOB:

SHEET NO. B16

THIS DRAWING (HARD COPY AND/OR ELECTRONIC FILE), INCLUDING THE PRINCIPLES OF DESIGN, IS THE PROPERTY OF THE ORIGINATOR OF THIS DOCUMENT AND IS SUBMITTED WITH THE AGREEMENT THAT IT IS NOT TO BE ALTERED, REPRODUCED, COPIED OR LOANED, IN PART OR WHOLE. IT IS NOT TO BE USED IN ANY MANNER THAT MAY BE A DETRIMENT TO ITS ORIGINATOR. USE THIS ELECTRONIC FILE AT YOUR OWN RISK WITH NO LIABILITY TO THE ORIGINATOR FOR ANY INACCURACIES OR INCOMPATIBILITIES. SEE THE LATEST ORIGINAL. ALL DATA IS GRAPHICAL IN NATURE, AND IS FOR INFORMATION PURPOSES ONLY. ALL DIMENSIONS, SLOPES, ELEVATIONS WERE DERIVED FROM OTHER SOURCES. ACCEPTANCE OF THIS DRAWING IS AN AGREEMENT TO THE ABOVE.

NOTE:

THREADED CONC INSERTS & FLAT HEAD CAP SCREWS SHALL BE ASTM A307 STAINLESS STEEL OR EQUIVALENT.

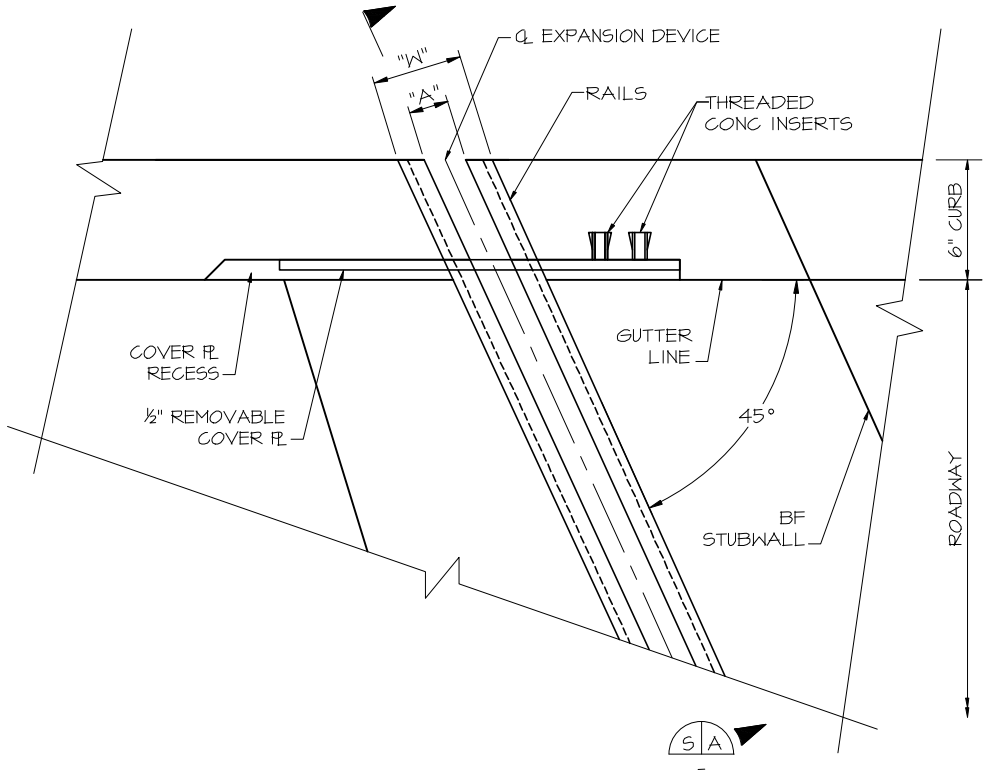

CURB - PLAN

SIMILAR AT SIDEWALK

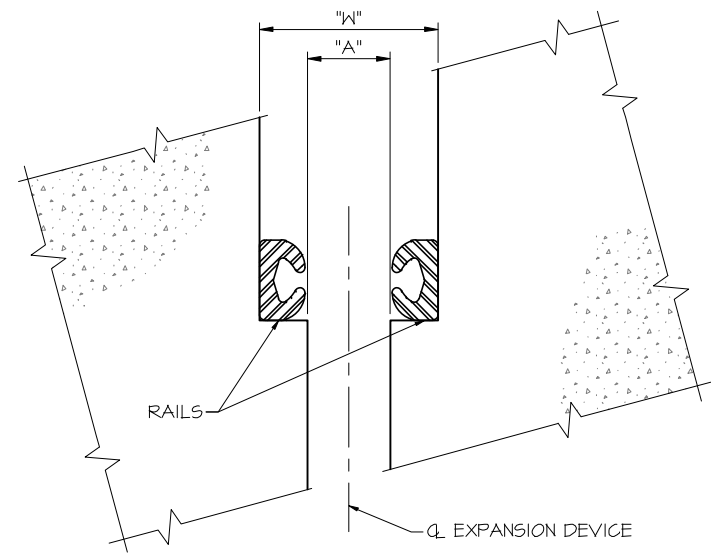

SECTION S B

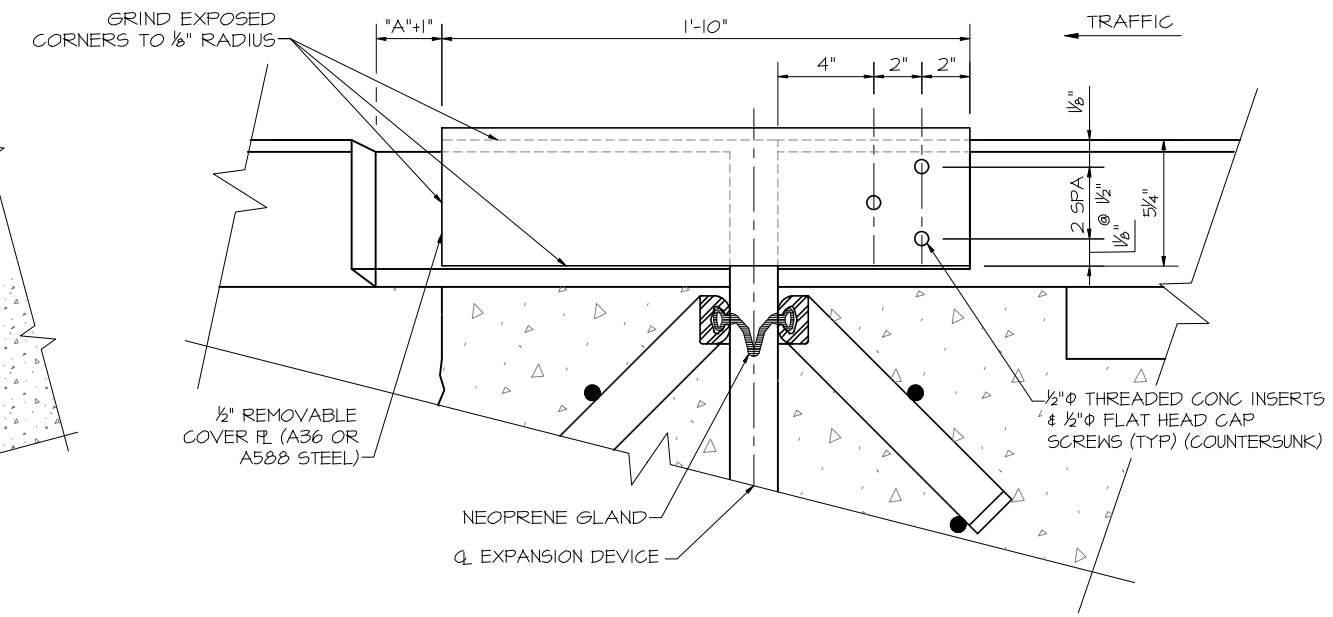

SECTION S C

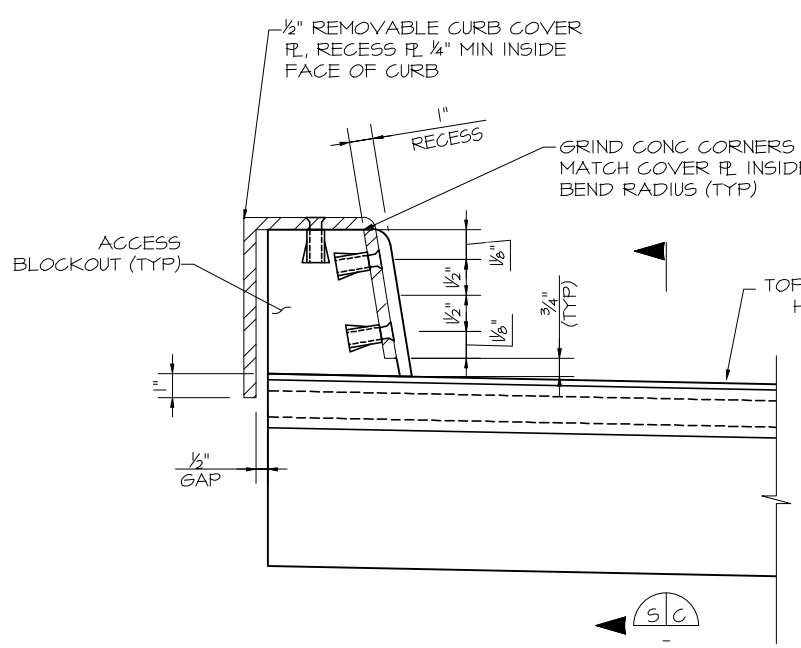

SECTION S A

AT CURB

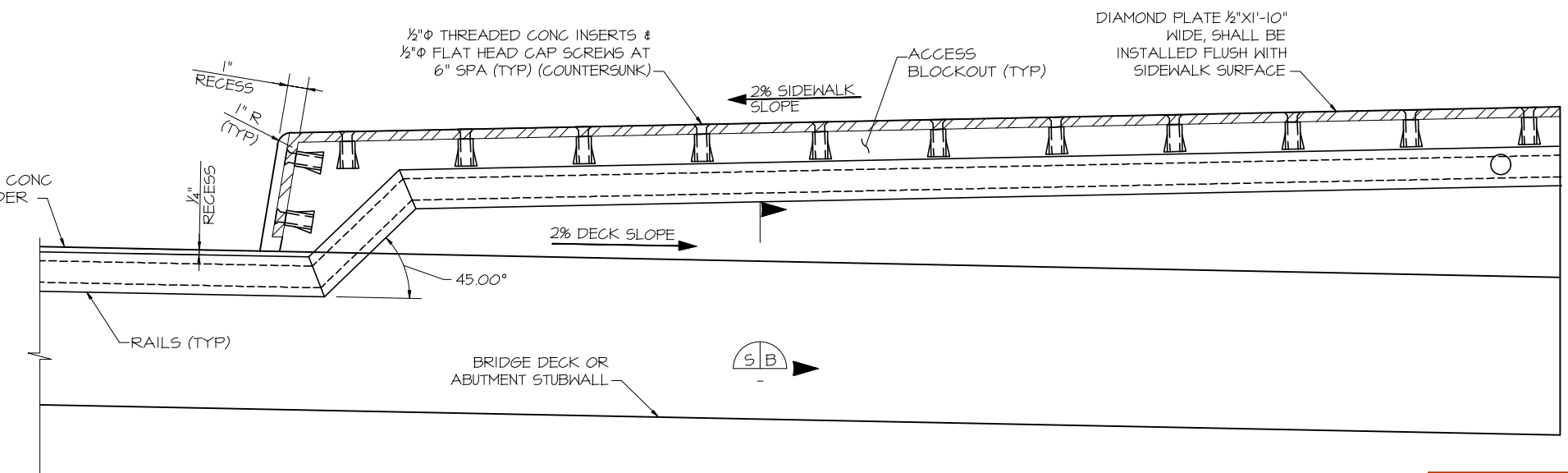

NOTE:
PROVIDE 2" MINIMUM COVER BETWEEN ANCHORS AND ALL CONCRETE SURFACES.

SECTION S A

AT SIDEWALK

AS-BUILT/ CONSTRUCTED

COLORADO REGISTERED PROFESSIONAL ENGINEER 49431

07-12-22

	REVISIONS	DATE	BY
1	REVISED BEARING PAD DEPTH	05-19-21	HMR
2			
3			
4			
5			
6			
7			

PREPARED FOR: STRUCTURES / CLASSIC HOMES

STEAMBOAT STRUCTURES

DESIGNED BY: HMR
DRAWN BY: AJM
PROJECT MANAGER: HMR
DATE: 7/12/22

PROJECT TITLE: FOREST LAKES BRIDGES

PROJECT LOCATION: MONUMENT, CO

BRIDGE EXPANSION DEVICE (2 OF 2)

STRUCT/JOB:

SHEET NO. B17

THIS DRAWING (HARD COPY AND/OR ELECTRONIC FILE), INCLUDING THE PRINCIPLES OF DESIGN, IS THE PROPERTY OF THE ORIGINATOR OF THIS DOCUMENT AND IS SUBMITTED WITH THE AGREEMENT THAT IT IS NOT TO BE ALTERED, REPRODUCED, COPIED OR LOANED, IN PART OR WHOLE. IT IS NOT TO BE USED IN ANY MANNER THAT MAY BE A DETRIMENT TO ITS ORIGINATOR. USE THIS ELECTRONIC FILE AT YOUR OWN RISK WITH NO LIABILITY TO THE ORIGINATOR FOR ANY INACCURACIES OR INCOMPATIBILITIES. SEE THE LATEST ORIGINAL. ALL DATA IS GRAPHICAL IN NATURE, AND IS FOR INFORMATION PURPOSES ONLY. ALL DIMENSIONS, SLOPES, ELEVATIONS WERE DERIVED FROM OTHER SOURCES. ACCEPTANCE OF THIS DRAWING IS AN AGREEMENT TO THE ABOVE.

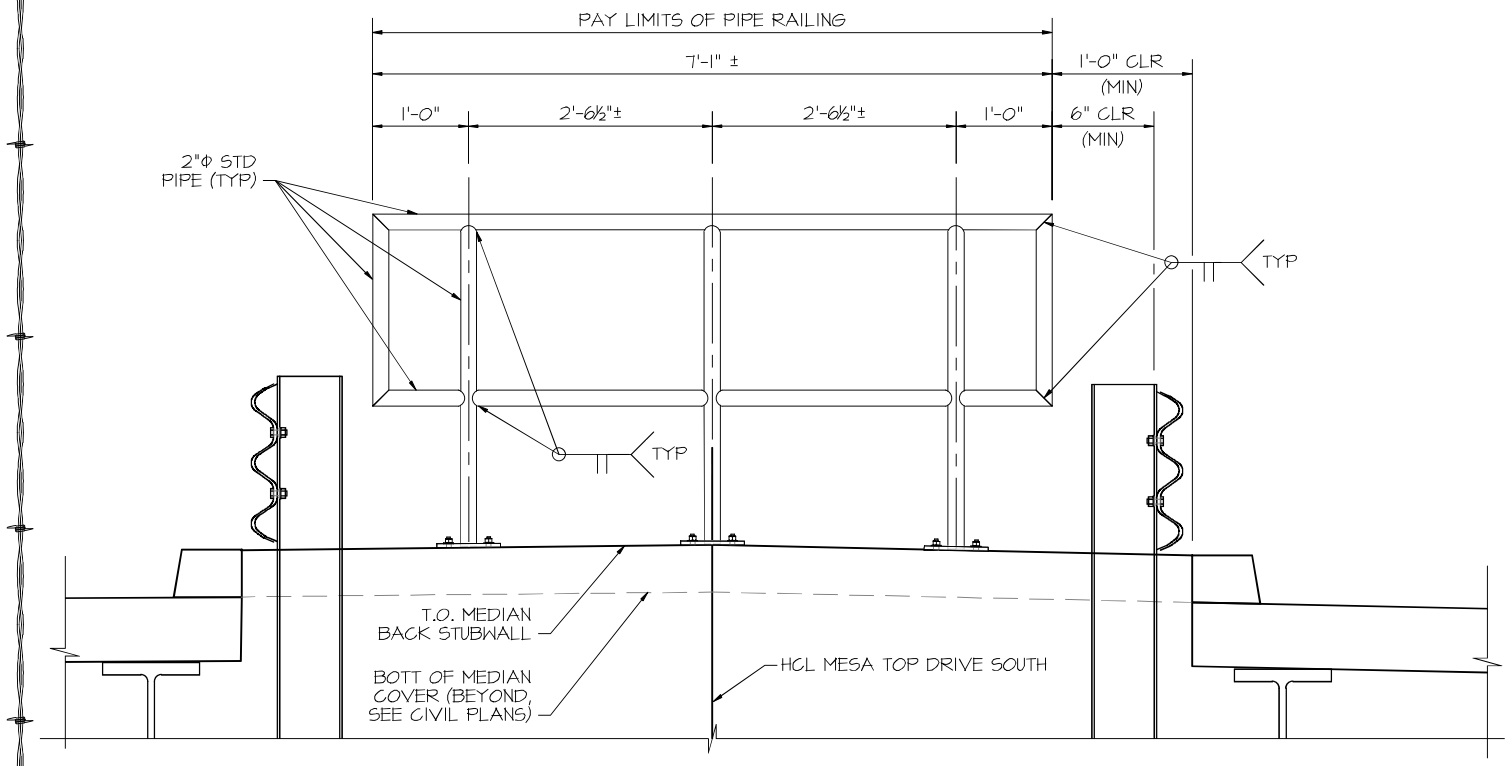

MEDIAN PIPE RAILING - ELEVATION

(TYPICAL AT ABUTMENT MEDIAN)

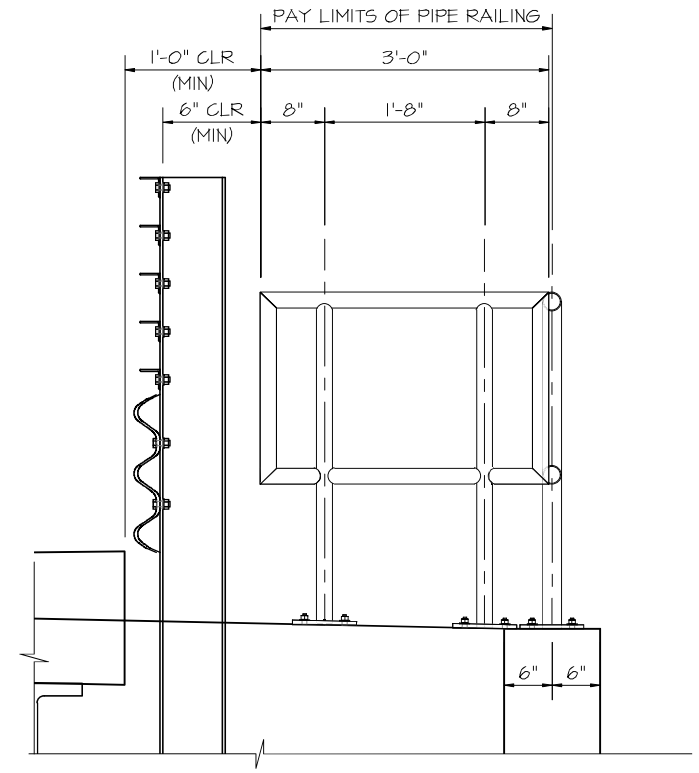

END PIPE RAILING - ELEVATION

(TYPICAL ALL ABUTMENT CORNERS)

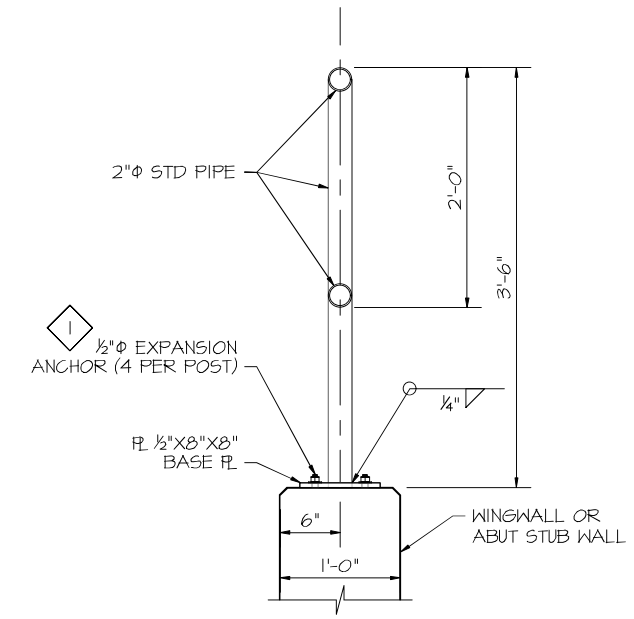

TYPICAL SECTION

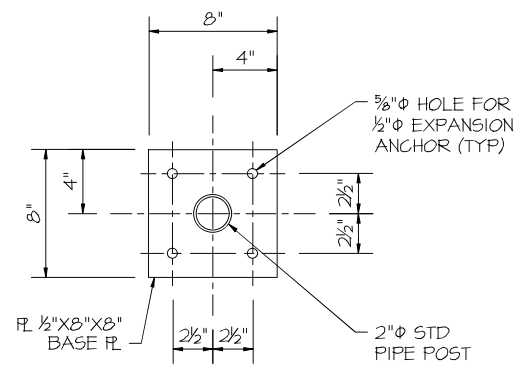

BASE PLATE DETAIL

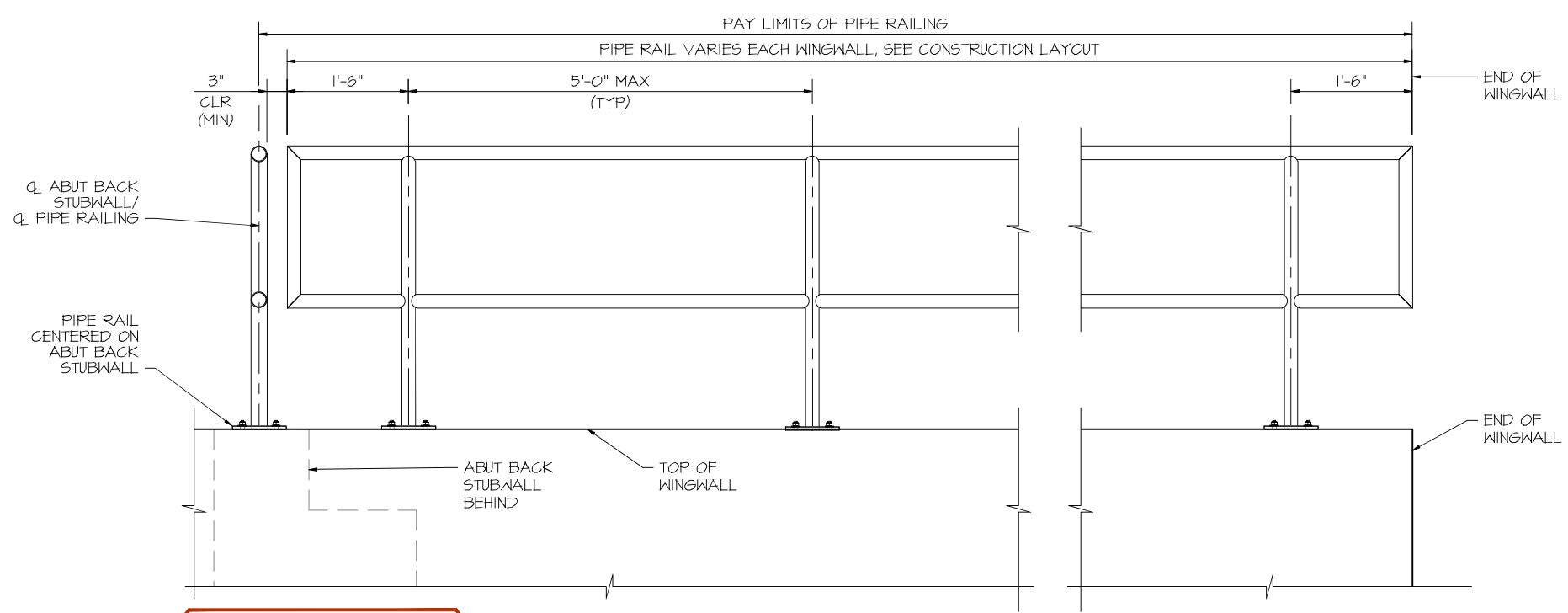

WINGWALL PIPE RAILING - ELEVATION

1 EXPANSION ANCHOR SHALL HAVE A MINIMUM ALLOWABLE TENSION CAPACITY OF 3000 LBS AND A MINIMUM ALLOWABLE SHEAR CAPACITY OF 3000 LBS. THE CONTRACTOR MAY SUBMIT AN ALTERNATE ANCHOR SYSTEM, WHICH MEETS THE MINIMUM ALLOWABLE CAPACITY REQUIREMENTS, FOR ENGINEER APPROVAL. FIELD DRILL AND INSTALL PER ANCHOR MANUFACTURER'S RECOMMENDATION.

NOTES:

1. BASE PLATE SHALL BE ASTM A36.
2. ALL RAILING STEEL SHALL BE GALVANIZED.
3. STEEL PIPE SHALL BE ASTM A53 GRADE B.
4. RAILING SHALL BE FABRICATED AND INSTALLED SUCH THAT POSTS ARE PLUMB AND HORIZONTAL MEMBERS ARE LEVEL.
5. SEE ABUTMENT DETAILS SHEET AND WINGWALL DETAILS SHEET FOR ADDITIONAL INFORMATION CONCERNING CLOSURE WALL.

AS-BUILT/ CONSTRUCTED

COLORADO REGISTERED PROFESSIONAL ENGINEER 49431

07-12-22

REVISIONS		DATE	BY
1	REVISED BEARING PAD DEPTH	05-19-21	HMR
2			
3			
4			
5			
6			
7			

PREPARED FOR: STRUCTURES CLASSIC HOMES

STEAMBOAT STRUCTURES

DESIGNED BY: HMR
DRAWN BY: AJM
PROJECT MANAGER: HMR
DATE: 7/12/22

PROJECT TITLE: FOREST LAKES BRIDGES

PROJECT LOCATION: MONUMENT, CO

PIPE RAILING

STRUCT/JOB:

SHEET NO. B18

THIS DRAWING (HARD COPY AND/OR ELECTRONIC FILE), INCLUDING THE PRINCIPLES OF DESIGN, IS THE PROPERTY OF THE ORIGINATOR OF THIS DOCUMENT AND IS SUBMITTED WITH THE AGREEMENT THAT IT IS NOT TO BE ALTERED, REPRODUCED, COPIED OR LOANED, IN PART OR WHOLE. IT IS NOT TO BE USED IN ANY MANNER THAT MAY BE A DETRIMENT TO ITS ORIGINATOR. USE THIS ELECTRONIC FILE AT YOUR OWN RISK WITH NO LIABILITY TO THE ORIGINATOR FOR ANY INACCURACIES OR INCOMPATIBILITIES. SEE THE LATEST ORIGINAL. ALL DATA IS GRAPHICAL IN NATURE, AND IS FOR INFORMATION PURPOSES ONLY. ALL DIMENSIONS, SLOPES, ELEVATIONS WERE DERIVED FROM OTHER SOURCES. ACCEPTANCE OF THIS DRAWING IS AN AGREEMENT TO THE ABOVE.

NOTES:

1. CONCRETE CLASS D (BRIDGE) SHALL BE USED FOR APPROACH SLABS.
2. APPROACH SLAB CONCRETE SHALL BE CURED IN ACCORDANCE WITH THE SPECIFICATIONS FOR BRIDGE DECK CONCRETE IN SUBSECTION 601.
3. ½" EXPANSION JOINT MATERIAL SHALL MEET AASHTO SPEC M213.
4. FOR EXPANSION DEVICE DETAILS, SEE BRIDGE EXPANSION DEVICE SHEETS.
5. FOR CURB & SIDEWALK DETAILS, SEE CIVIL PLANS.

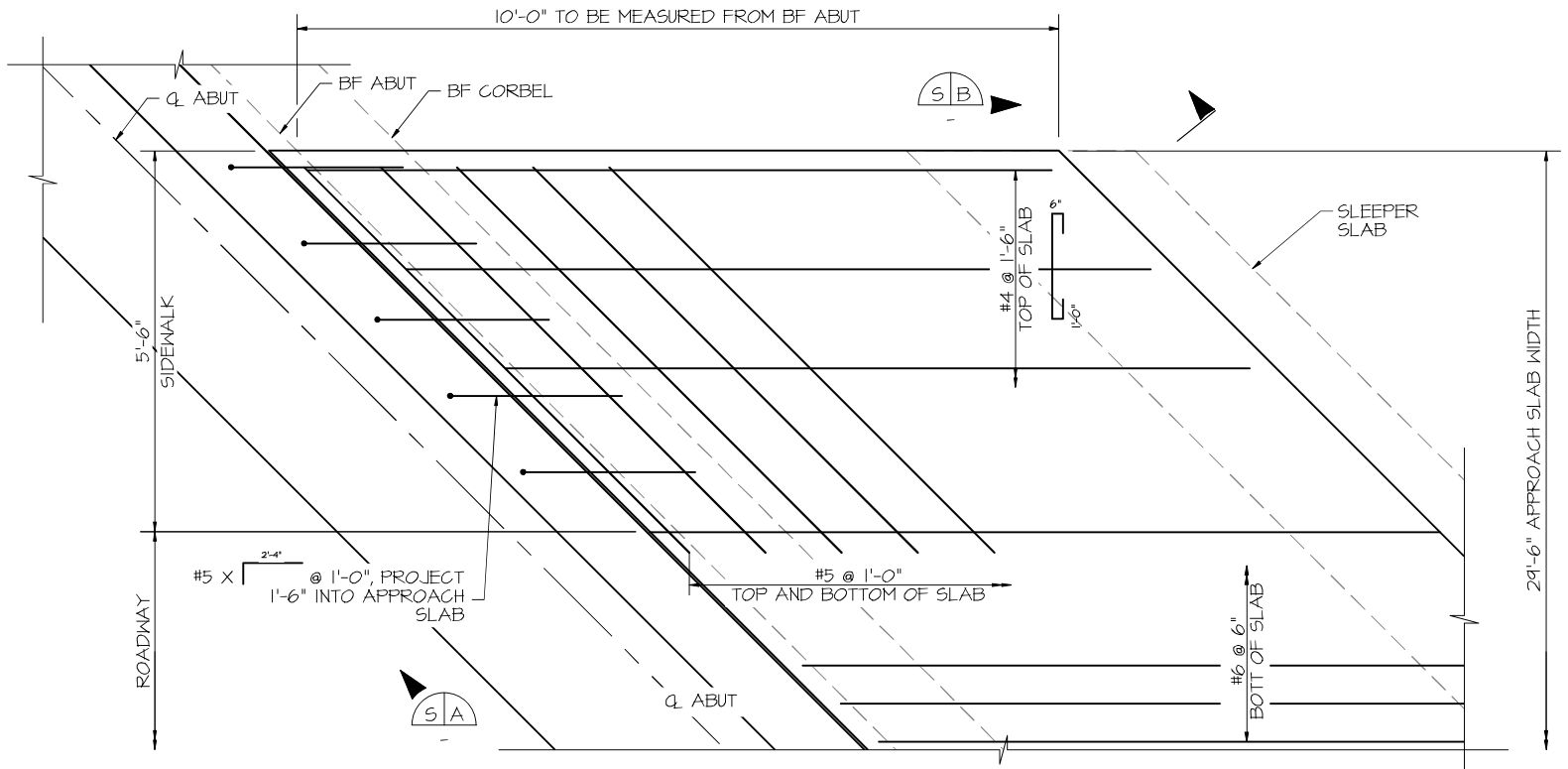

PLAN

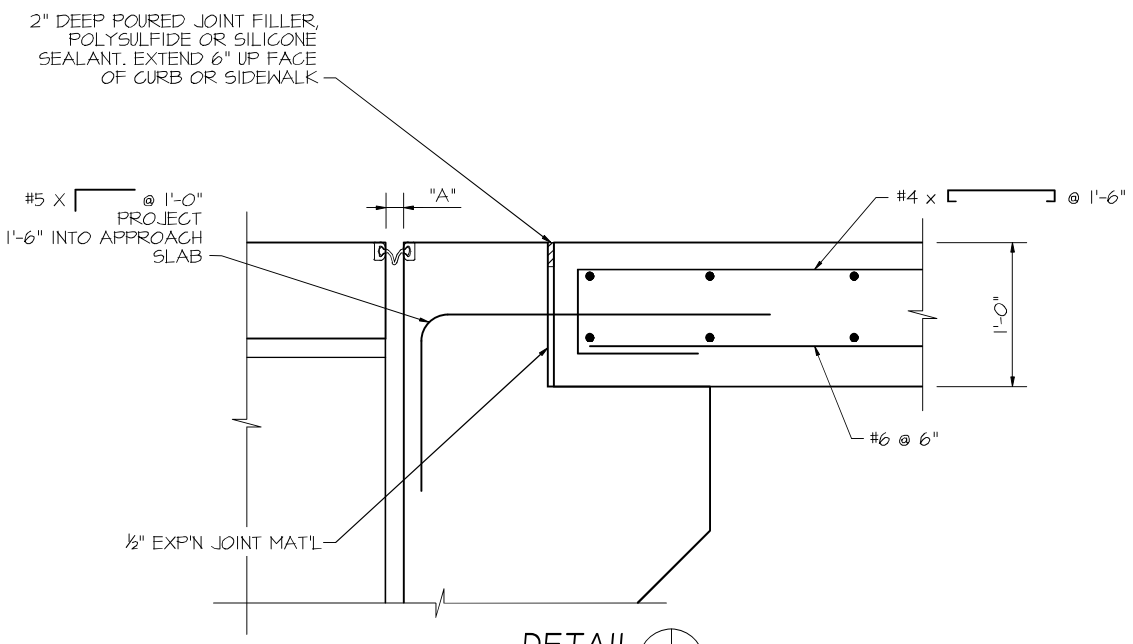

DETAIL D 01

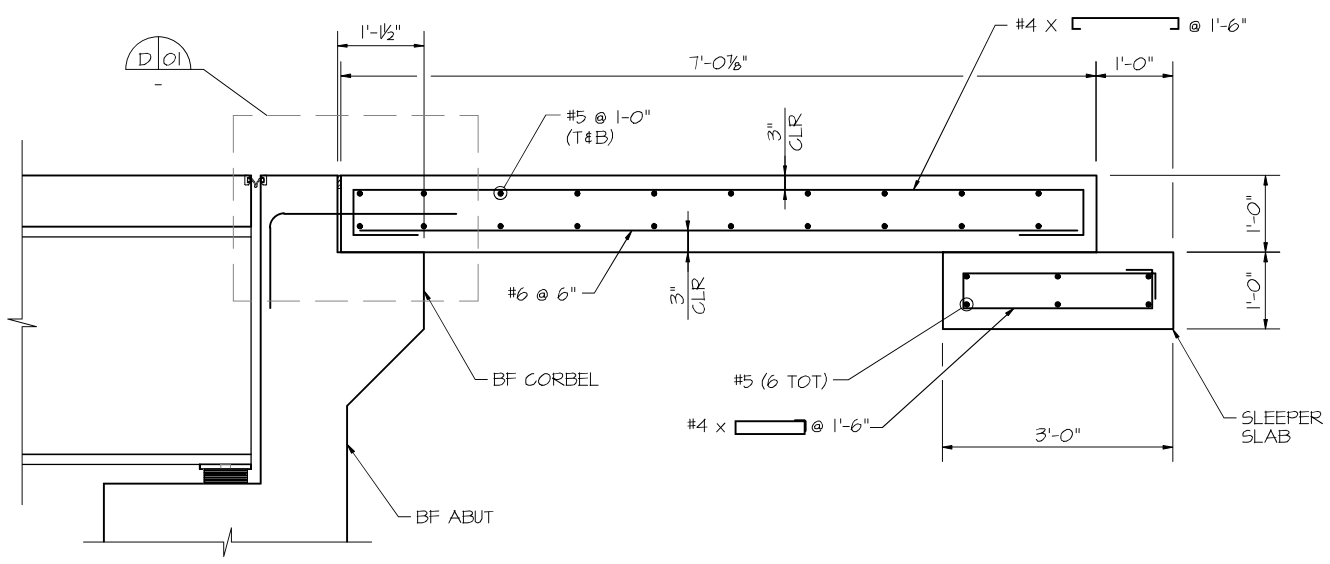

SECTION S A

(PERPENDICULAR TO ℄ ABUT)

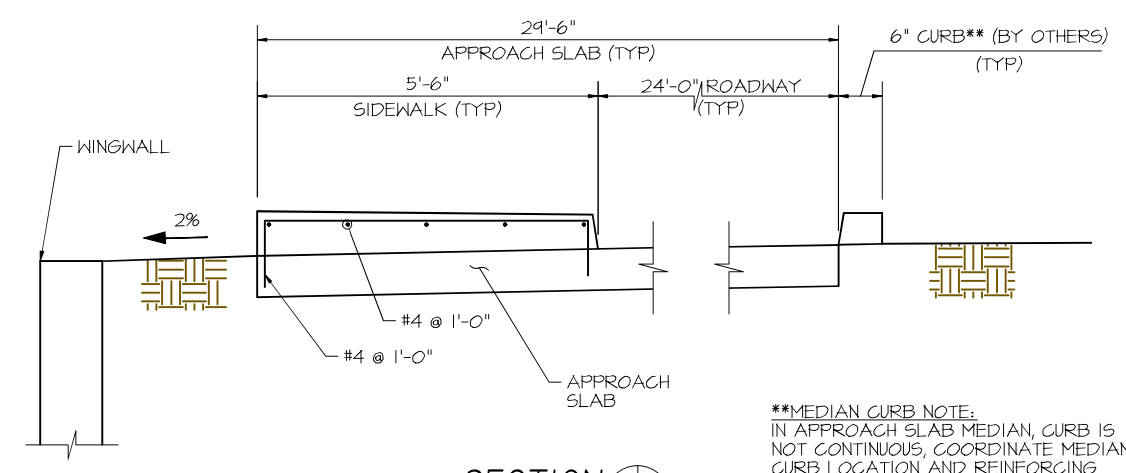

SECTION S B

APPROACH SLAB REINFORCEMENT NOT SHOWN FOR CLARITY

**MEDIAN CURB NOTE:
IN APPROACH SLAB MEDIAN, CURB IS NOT CONTINUOUS, COORDINATE MEDIAN CURB LOCATION AND REINFORCING LOCATIONS WITH THE CIVIL SHEETS.

AS-BUILT/ CONSTRUCTED

COLORADO REGISTERED HAMID MAHMOUD PROFESSIONAL ENGINEER 49431

07-12-22

	REVISIONS	DATE	BY
1	REVISED BEARING PAD DEPTH	05-19-21	HMR
2			
3			
4			
5			
6			
7			

PREPARED FOR: STRUCTURES CLASSIC HOMES

STEAMBOAT STRUCTURES

DESIGNED BY: HMR
DRAWN BY: AJM
PROJECT MANAGER: HMR
DATE: 7/12/22

PROJECT TITLE: FOREST LAKES BRIDGES

PROJECT LOCATION: MONUMENT, CO

APPROACH SLAB

STRUCT/JOB:

SHEET NO. B19

THIS DRAWING (HARD COPY AND/OR ELECTRONIC FILE), INCLUDING THE PRINCIPLES OF DESIGN, IS THE PROPERTY OF THE ORIGINATOR OF THIS DOCUMENT AND IS SUBMITTED WITH THE AGREEMENT THAT IT IS NOT TO BE ALTERED, REPRODUCED, COPIED OR LOANED, IN PART OR WHOLE. IT IS NOT TO BE USED IN ANY MANNER THAT MAY BE A DETRIMENT TO ITS ORIGINATOR. USE THIS ELECTRONIC FILE AT YOUR OWN RISK WITH NO LIABILITY TO THE ORIGINATOR FOR ANY INACCURACIES OR INCOMPATIBILITIES. SEE THE LATEST ORIGINAL. ALL DATA IS GRAPHICAL IN NATURE, AND IS FOR INFORMATION PURPOSES ONLY. ALL DIMENSIONS, SLOPES, ELEVATIONS WERE DERIVED FROM OTHER SOURCES. ACCEPTANCE OF THIS DRAWING IS AN AGREEMENT TO THE ABOVE.

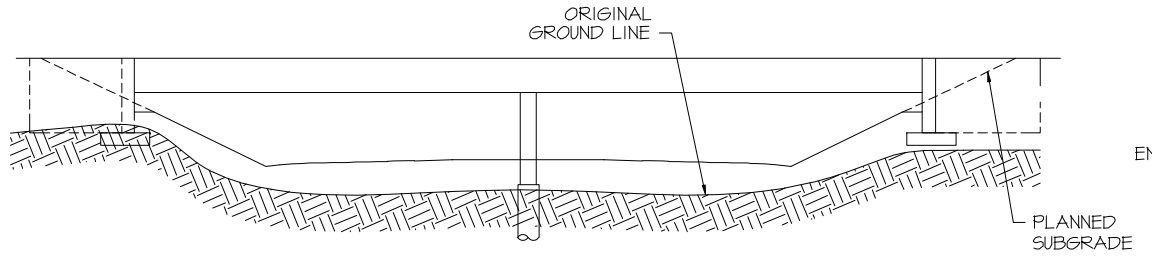

ELEVATION SCHEMATIC

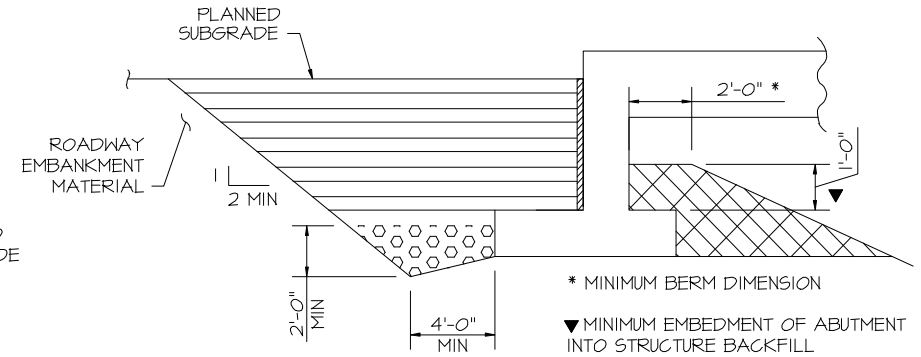

SECTION (BACKFILL) S B

LEGEND

- STRUCTURE BACKFILL (CLASS 1) WITH MECHANICAL REINFORCEMENT AS SHOWN ON THE PLANS
- REFER TO CIVIL PLANS FOR GRADING IN FRONT OF ABUTMENTS AND WINGWALLS
- FILTER MATERIAL
- STRUCTURE BACKFILL (CLASS 1)

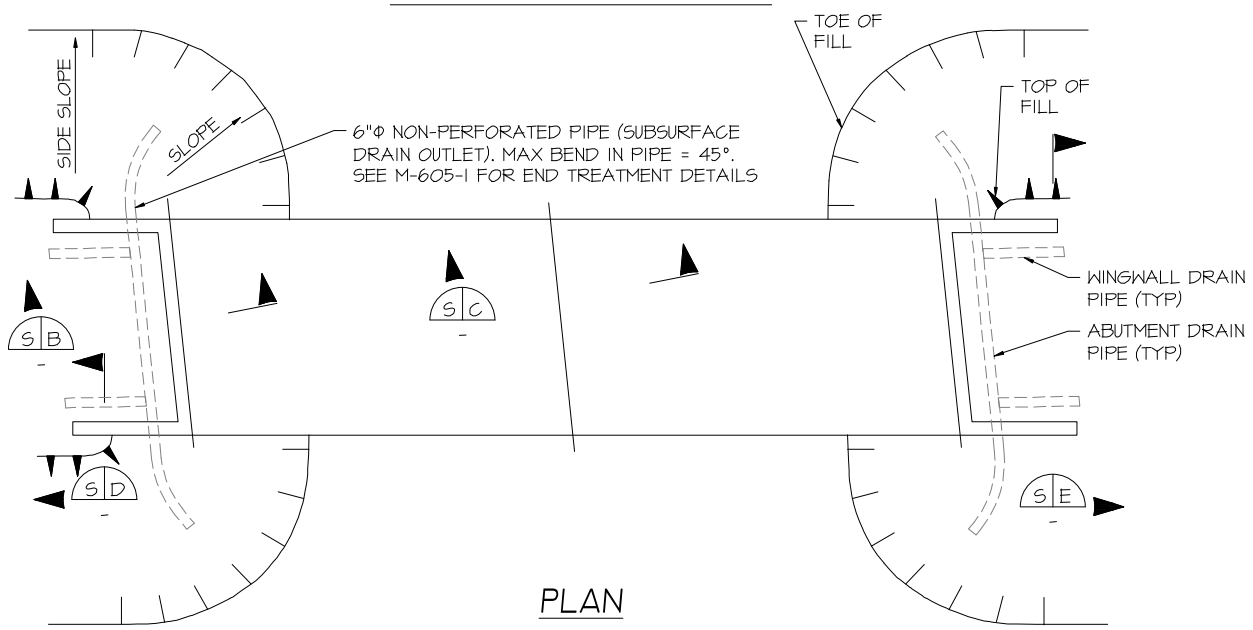

PLAN

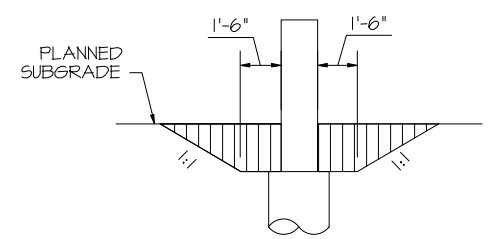

SECTION (BACKFILL) S C

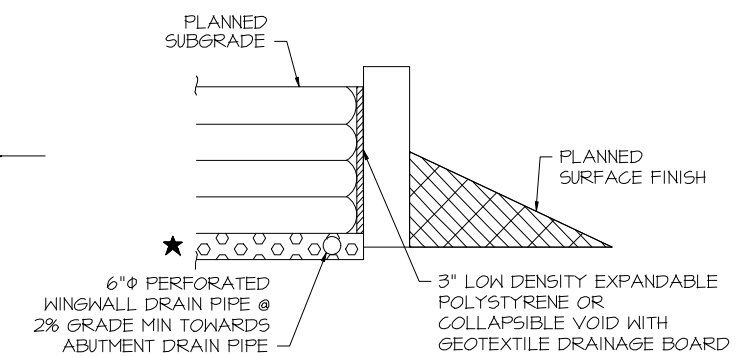

SECTION (BACKFILL) S D

★ FILTER MATERIAL IS ONLY USED IN AREA NEAR THE ABUTMENT AND NOT AT THE END OF THE WINGWALL

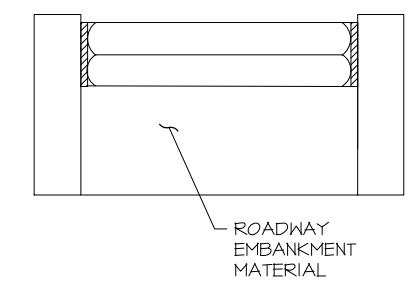

SECTION (BACKFILL) S E

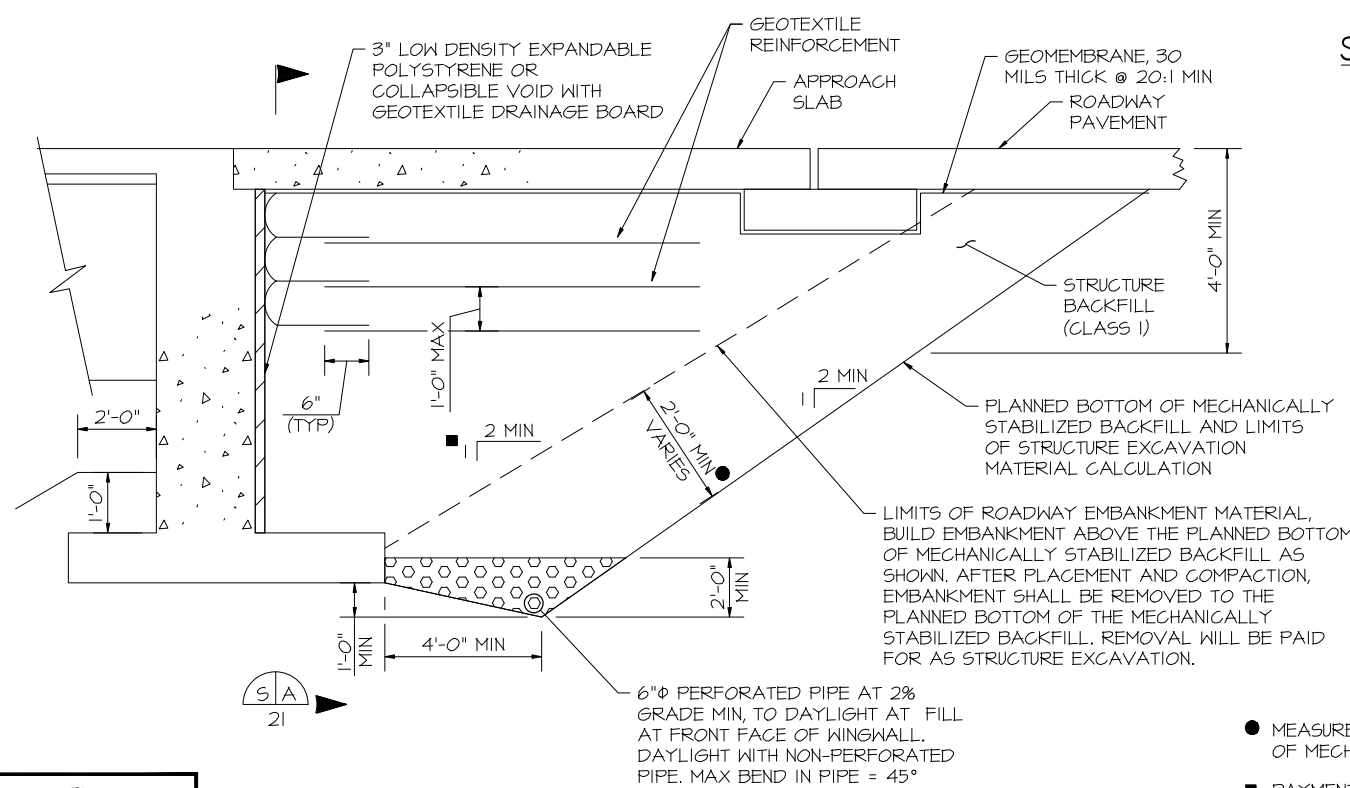

SECTION PERPENDICULAR TO ABUTMENT

- ● MEASURED PERPENDICULAR TO PLANNED BOTTOM OF MECHANICALLY STABILIZED BACKFILL
- ■ PAYMENT BASED ON 2:1 SLOPE. ADDITIONAL QUANTITIES SHALL BE INCLUDED IN THE WORK.

NOTES:

1. REFER TO M-206-2 FOR EXCAVATION LIMITS.
2. GEOTEXTILE REINFORCEMENT SHALL BE WOVEN FABRIC WITH A MINIMUM AVERAGE ROLL VALUE OF 4800 LB/FT FOR INSTALLATIONS WITH A GAP AND 2400 LB/FT FOR INSTALLATIONS WITHOUT A GAP BASED ON ASTM D4595.
3. GEOTEXTILE REINFORCEMENT SHALL BE PLACED BY ALTERNATING MACHINE DIRECTION (MD) WITH CROSS MACHINE DIRECTION (XD) FROM LAYER TO LAYER.
4. THE GEOTECXTILE REINFORCEMENT WRAP AT BACK FACE OF ABUTMENT SHALL BE PULLED BACK SLACK FREE WITH ITS END ANCHORED TO SOIL UNDERNEATH WITH STAPLES OR PINS.
5. MINIMUM SPLICE OF ALL GEOFABRIC SHALL CONSIST OF 6" OF OVERLAP.
6. PAYMENT FOR ALL WORK ITEMS SHOWN WILL BE MADE UNDER ITEM 206 MECHANICAL REINFORCEMENT OF SOIL (CY) AND ITEM 206 STRUCTURE BACKFILL (CLASS 1) (CY) AND SHALL INCLUDE THE COST FOR 6 INCH Φ PERFORATED PIPE UNDERDRAIN AND SUBSURFACE DRAIN OUTLET (6 INCH Φ NON-PERFORATED PIPE) AND FILTER MATERIAL (CLASS B) QUANTITIES.
7. INSTALLATION OF PIPE UNDERDRAIN, SUBSURFACE DRAIN OUTLET, AND GEOCOMPOSITE DRAIN WILL CONFORM TO THE CONSTRUCTION REQUIREMENTS OF SECTION 605.03, 605.06 AND 605.04, RESPECTIVELY.
8. GEOCOMPOSITE DRAINAGE BOARD SHALL BE PLACED ON THE SOIL SIDE OF WALLS AND ABUTMENTS.

AS-BUILT/ CONSTRUCTED

COLORADO REGISTERED PROFESSIONAL ENGINEER 49431 — 01-12-22

	REVISIONS	DATE	BY
1	REVISED BEARING PAD DEPTH	05-19-21	HMR
2			
3			
4			
5			
6			
7			

PREPARED FOR: STRUCTURES / CLASSIC HOMES

STEAMBOAT STRUCTURES

DESIGNED BY: HMR
DRAWN BY: AJM
PROJECT MANAGER: HMR
DATE: 7/12/22

PROJECT TITLE: FOREST LAKES BRIDGES
PROJECT LOCATION: MONUMENT, CO
STRUCT/JOB:
BACKFILL DETAILS (1 OF 2)
SHEET NO. B20

THIS DRAWING (HARD COPY AND/OR ELECTRONIC FILE), INCLUDING THE PRINCIPLES OF DESIGN, IS THE PROPERTY OF THE ORIGINATOR OF THIS DOCUMENT AND IS SUBMITTED WITH THE AGREEMENT THAT IT IS NOT TO BE ALTERED, REPRODUCED, COPIED OR LOANED, IN PART OR WHOLE. IT IS NOT TO BE USED IN ANY MANNER THAT MAY BE A DETRIMENT TO ITS ORIGINATOR. USE THIS ELECTRONIC FILE AT YOUR OWN RISK WITH NO LIABILITY TO THE ORIGINATOR FOR ANY INACCURACIES OR INCOMPATIBILITIES. SEE THE LATEST ORIGINAL. ALL DATA IS GRAPHICAL IN NATURE, AND IS FOR INFORMATION PURPOSES ONLY. ALL DIMENSIONS, SLOPES, ELEVATIONS WERE DERIVED FROM OTHER SOURCES. ACCEPTANCE OF THIS DRAWING IS AN AGREEMENT TO THE ABOVE.

LEGEND

STRUCTURE BACKFILL (CLASS 1) WITH MECHANICAL REINFORCEMENT AS SHOWN ON THE PLANS

FILTER MATERIAL

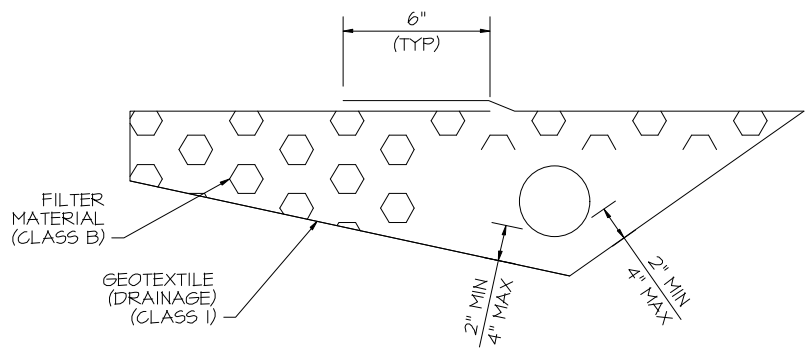

6 INCH PERFORATED PIPE UNDERDRAIN

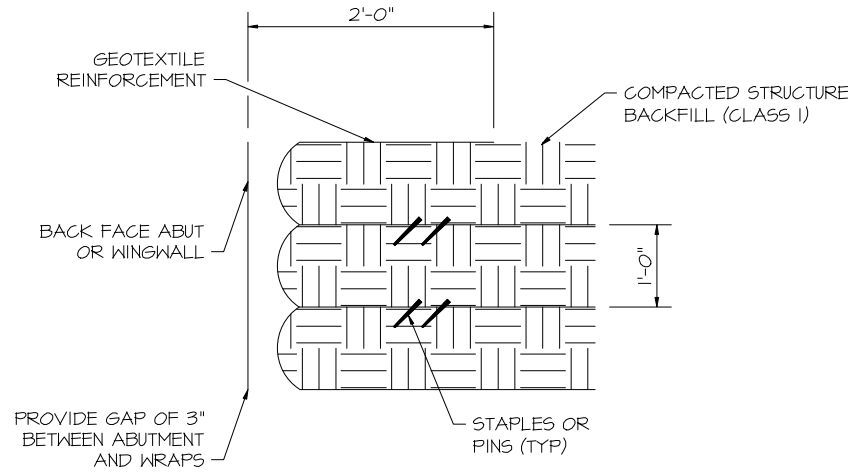

WRAP DETAIL

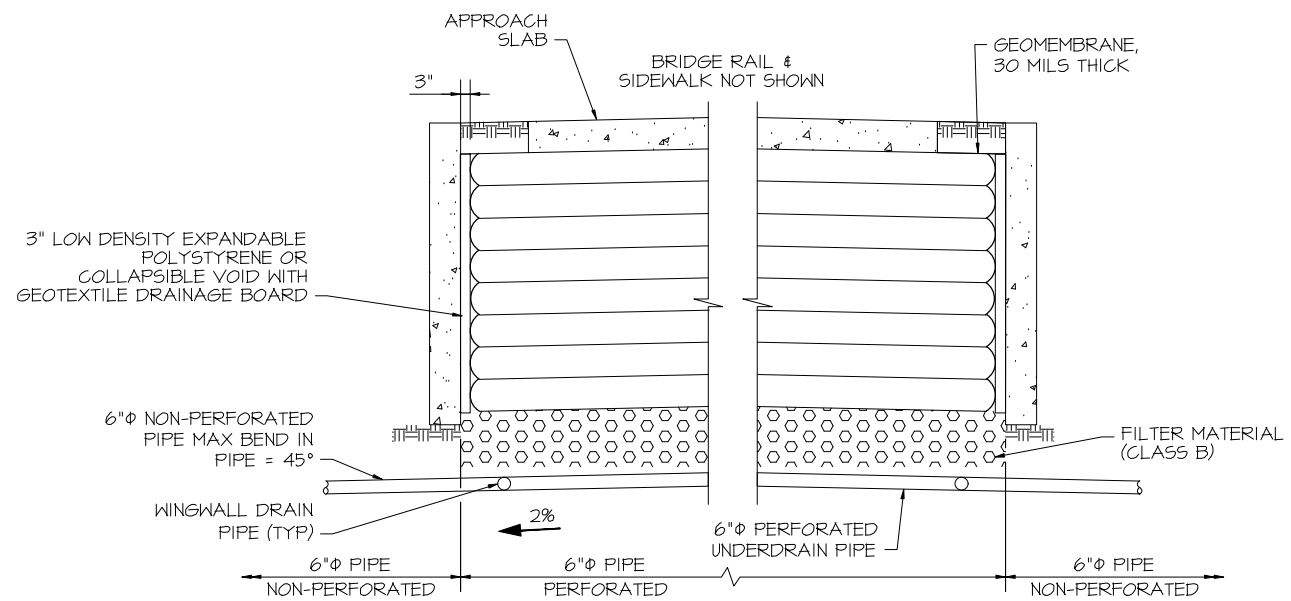

SECTION S A / 20

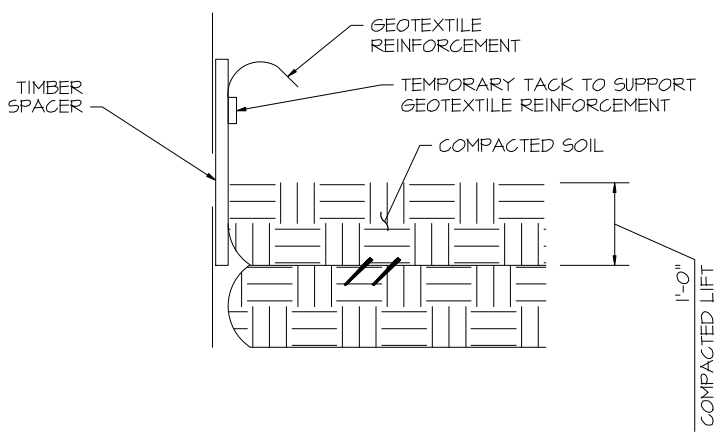

GAP DETAIL STEP 1

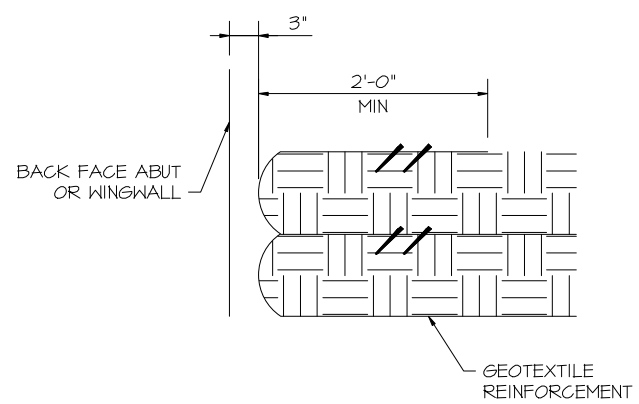

GAP DETAIL STEP 2

WHEN REQUIRED, THE GEOTEXTILE REINFORCEMENT WRAP AT BACK FACE OF ABUTMENT OR WINGWALL SHALL BE TEMPORARILY HUNG WITH A SPACER BOARD AND TACK STRIP. AFTER REACHING TOTAL OF 1'-0" COMPACTED LIFT, THE TACK STRIP SHALL BE REMOVED AND TEXTILE REINFORCEMENT SHALL BE PULLED BACK SLACK FREE WITH ITS END ANCHORED TO SOIL UNDERNEATH WITH STAPLE OR PINS BEFORE THE SPACER BOARD IS PULLED. ANY ALTERNATE METHOD TO MAINTAIN THE MINIMUM GAP BETWEEN ABUTMENT CONCRETE AND REINFORCED SOIL MAY BE PROPOSED TO THE ENGINEER FOR APPROVAL

NOTES:

1. REFER TO M-206-2 FOR EXCAVATION LIMITS.
2. GEOTEXTILE REINFORCEMENT SHALL BE WOVEN FABRIC WITH A MINIMUM AVERAGE ROLL VALUE OF 4800 LB/FT FOR INSTALLATIONS WITH A GAP AND 2400 LB/FT FOR INSTALLATIONS WITHOUT A GAP BASED ON ASTM D4595.
3. GEOTEXTILE REINFORCEMENT SHALL BE PLACED BY ALTERNATING MACHINE DIRECTION (MD) WITH CROSS MACHINE DIRECTION (XD) FROM LAYER TO LAYER.
4. THE GEOTECXTILE REINFORCEMENT WRAP AT BACK FACE OF ABUTMENT SHALL BE PULLED BACK SLACK FREE WITH ITS END ANCHORED TO SOIL UNDERNEATH WITH STAPLES OR PINS.
5. MINIMUM SPLICE OF ALL GEOFABRIC SHALL CONSIST OF 6" OF OVERLAP.
6. PAYMENT FOR ALL WORK ITEMS SHOWN WILL BE MADE UNDER ITEM 206 MECHANICAL REINFORCEMENT OF SOIL (CY) AND ITEM 206 STRUCTURE BACKFILL (CLASS 1) (CY) AND SHALL INCLUDE THE COST FOR 6 INCH Φ PERFORATED PIPE UNDERDRAIN AND SUBSURFACE DRAIN OUTLET (6 INCH Φ NON-PERFORATED PIPE) AND FILTER MATERIAL (CLASS B) QUANTITIES.
7. INSTALLATION OF PIPE UNDERDRAIN, SUBSURFACE DRAIN OUTLET, AND GEOCOMPOSITE DRAIN WILL CONFORM TO THE CONSTRUCTION REQUIREMENTS OF SECTION 605.03, 605.06 AND 605.04, RESPECTIVELY.
8. GEOCOMPOSITE DRAINAGE BOARD SHALL BE PLACED ON THE SOIL SIDE OF WALLS AND ABUTMENTS.

AS-BUILT/ CONSTRUCTED

COLORADO REGISTERED PROFESSIONAL ENGINEER 49431 — 07-12-22

	REVISIONS	DATE	BY
1	REVISED BEARING PAD DEPTH	05-19-21	HMR
2			
3			
4			
5			
6			
7			

PREPARED FOR: STRUCTURES / CLASSIC HOMES

STEAMBOAT STRUCTURES

DESIGNED BY: HMR
DRAWN BY: AJM
PROJECT MANAGER: HMR
DATE: 7/12/22

PROJECT TITLE: FOREST LAKES BRIDGES

PROJECT LOCATION: MONUMENT, CO

BACKFILL DETAILS (2 OF 2)

STRUCT./JOB:

SHEET NO. B21

THIS DRAWING (HARD COPY AND/OR ELECTRONIC FILE), INCLUDING THE PRINCIPLES OF DESIGN, IS THE PROPERTY OF THE ORIGINATOR OF THIS DOCUMENT AND IS SUBMITTED WITH THE AGREEMENT THAT IT IS NOT TO BE ALTERED, REPRODUCED, COPIED OR LOANED, IN PART OR WHOLE. IT IS NOT TO BE USED IN ANY MANNER THAT MAY BE A DETRIMENT TO ITS ORIGINATOR. USE THIS ELECTRONIC FILE AT YOUR OWN RISK WITH NO LIABILITY TO THE ORIGINATOR FOR ANY INACCURACIES OR INCOMPATIBILITIES. SEE THE LATEST ORIGINAL. ALL DATA IS GRAPHICAL IN NATURE, AND IS FOR INFORMATION PURPOSES ONLY. ALL DIMENSIONS, SLOPES, ELEVATIONS WERE DERIVED FROM OTHER SOURCES. ACCEPTANCE OF THIS DRAWING IS AN AGREEMENT TO THE ABOVE.