ENTECH
ENGINEERING, INC.
505 ELKTON DRIVE
COLORADO SPRINGS, CO 80907
PHONE (719) 531-5599
FAX (719) 531-5238

SOIL, GEOLOGY, & GEOLOGIC HAZARD STUDY
JAYNES PROPERTY
POCO ROAD AND VOLLMER ROAD
EL PASO COUNTY, COLORADO

Prepared for

Elite Properties of America, Inc.
2138 Flying Horse Club Drive
Colorado Springs, Colorado 80921

Attn: Loren Moreland

April 5, 2022

Respectfully Submitted,

ENTECH ENGINEERING, INC.

Logan L. Langford, P.G.
Geologist

COLORADO REGISTERED
JOSEPH COLLIN GOODE JR.
23725
4-5-2022
PROFESSIONAL ENGINEER

Reviewed by:

Joseph C. Goode, Jr., P.E.
President

LLL/am

Encl.

Entech Job No. 212381
AAprojects/2021/212381 countysoil/geo

TABLE OF CONTENTS

1.0 SUMMARY

Project Location

The project lies in portions of the S½ of Section 28, and a portion of the NW¼ of Section 33, Township 12 South, Range 65 West of the 6th Principal Meridian in El Paso County, Colorado. The site is located approximately three miles northeast of Colorado Springs, Colorado.

Project Description

Total acreage involved in the project is approximately one hundred and forty-two acres. Development is to consist of residential, neighborhood commercial, detention pond, and parks/open spaces are proposed for the site. The proposed development will utilize central sewer and water.

Scope of Report

This report presents the results of our geologic evaluation and treatment of engineering geologic hazard study.

Land Use and Engineering Geology

This site was found to be suitable for the proposed development. Areas were encountered where the geologic conditions will impose some constraints on development and land use. These include areas of artificial fill, potentially expansive soils, shallow bedrock, ponded water, shallow groundwater, seasonal shallow groundwater and potentially seasonally shallow groundwater areas, and radon. Based on the proposed development plan, it appears that these areas will have some impact on the development. These conditions will be discussed in greater detail in the report.

In general, it is our opinion that the development can be achieved if the observed geologic conditions on site are either avoided or properly mitigated. All recommendations are subject to the limitations discussed in the report.

2.0 GENERAL SITE CONDITIONS AND PROJECT DESCRIPTION

The site is located in portions of the S½ of Section 28, and a portion of the NW¼ of Section 33, Township 12 South, Range 65 West of the 6th Principal Meridian in El Paso County, Colorado. The site is located approximately three miles northeast of Colorado Springs, Colorado, at the southwest corner of Poco Road and Vollmer Road. The location of the site is as shown on the Vicinity Map, Figure 1.

The topography of the site is generally gradually to moderately sloping to the south. The drainages on site flow in a southerly direction through the central portion of the site. Drainages area located in the eastern and western portions of the site, and a pond is located in the eastern portion of the site. The pond had standing water at the time of our site observations, and water was not observed in the drainages. The site boundaries are indicated on the USGS Map, Figure 2. Previous land uses have included rural residential, grazing and pasture land. The site contains primarily field grasses, weeds, cacti, and yuccas, with areas of scattered trees and ponderosa pine trees located across the north central portion of the site. Site photographs, taken October 19, 2021, are included in Appendix A and locations are shown on Figure 3.

Total acreage involved in the proposed development is one hundred and forty-two acres. The development will consist of residential, neighborhood commercial, a detention pond, and parks/open spaces. The development will be serviced by central sewer and water. Development and grading plans were not available at the time of this investigation. A Preliminary Concept Plan is presented in Figure 4.

3.0 SCOPE OF THE REPORT

The scope of the report will include a general geologic analysis utilizing published geologic data. Detailed site-specific mapping will be conducted to obtain general information in respect to major geographic and geologic features, geologic descriptions and their effects on the development of the property.

4.0 FIELD INVESTIGATION

Our field investigation consisted of the preparation of a geologic map of any bedrock features and significant surficial deposits. The Natural Resource Conservation Service (NRCS), previously the Soil Conservation Service (SCS) survey was also reviewed to evaluate the site. The position of mappable units within the subject property are shown on the Geologic Map. Our mapping procedures involved both field reconnaissance and measurements and air photo reconnaissance and interpretation. The same mapping procedures have also been utilized to produce the Engineering Geology Map which identified pertinent geologic conditions affecting development. The field mapping was performed by personnel of Entech Engineering, Inc. on October 19, 2021.

Entech Engineering, Inc. prepared a Preliminary Subsurface Soil Investigation for the site dated October 25, 2021 (Reference 1). Twelve Test Borings were drilled across the site as part of the Preliminary Subsurface Soil Investigation to determine general soil and bedrock characteristics. Information from this investigation was use in preparing this report. The locations of the test borings are indicated on the Site Plan/Test Boring Location Map, Figure 3. The Summary of Laboratory Testing Results and Test Boring Logs are presented in Appendix B. Results of this testing will be discussed later in this report.

Laboratory testing was also performed on some of the soils to classify and determine the soils engineering characteristics. Laboratory tests included grain-size analysis ASTM D-422, Atterberg Limits ASTM D-4318, volume change testing using FHA Swell and Swell/Consolidation test. Sulfate testing was performed on select samples to evaluate potential for below grade concrete degradation due to sulfate attack. Results of the laboratory testing are included in Appendix B.

5.0 SOIL, GEOLOGY AND ENGINEERING GEOLOGY

5.1 General Geology

Physiographically, the site lies in the western portion of the Great Plains Physiographic Province. Approximately twelve miles to the west is a major structural feature known as the Rampart Range Fault. This fault marks the boundary between the Great Plains Physiographic

Province and the Southern Rocky Mountain Province. The site exists within the southeastern edge of a large structural feature known as the Denver Basin. Bedrock in the area tends to be very gently dipping in a northeasterly direction (Reference 2). The rocks in the area of the site are sedimentary in nature and typically Upper Cretaceous in age. The bedrock underlying the site consists of the Dawson Formation. Overlying this formation are unconsolidated deposits of man-made, and alluvial soils of Quaternary Age. The alluvial soils were deposited by water on site and as stream terraces along Sand Creek and the drainages located on the site. Man-made soils exist as fill piles located in the southern portion of the site. The site's stratigraphy will be discussed in more detail in Section 5.3.

5.2 Soil Conservation Survey

The Natural Resource Conservation Service (Reference 3), previously the Soil Conservation Service (Reference 4) has mapped three soil types on the site (Figure 4). In general, the soils classify as coarse sandy loam. The soils are described as follows:

Type	Description
71	Pring Coarse Sandy Loam, 3 to 8% slopes

Complete descriptions of each soil type are presented in Appendix D. The soils have generally been described to have moderate to moderately rapid permeabilities. Possible hazards with soil erosion are present on the site. The erosion potential can be controlled with vegetation. The majority of the soils have been described to have slight to moderate erosion hazards.

5.3 Site Stratigraphy

The Falcon NW Quadrangle Geology Map showing the site is presented in Figure 6 (Reference 5). The Geology Map prepared for the site is presented in Figure 7. Two mappable units were identified on this site which are described as follows:

Qaf **Artificial Fill of Holocene Age:** These are recent deposits of man-made fill. They are associated with the earthen dam located in the eastern portion of the site.

Tkd **Dawson Formation of Tertiary to Cretaceous Age:** The Dawson Formation typically consisted of arkosic sandstone with interbedded fine-grained sandstone,

siltstone and claystone. Overlying this formation is a variable layer of residual soil. The residual soils were derived from the in-situ weathering of the bedrock materials on-site. These soils consisted of silty to clayey sands.

The soils listed above were mapped from site-specific mapping, the *Geologic Map of the Falcon NW Quadrangle* distributed by the Colorado Geological Survey in 2003 (Reference 5), the *Geologic Map of the Colorado Springs-Castle Rock Area*, distributed by the US Geological Survey in 1979 (Reference 6), and the *Geologic Map of the Denver 1^0 x 2^0 Quadrangle*, distributed by the US Geological Survey in 1981 (Reference 7). The Test Borings and Profile Holes were also used in evaluating the site and are included in Appendix B. The Geology Map prepared for the site is presented in Figure 7.

5.4 Soil Conditions

Three soil types were observed during drilling which consisted of Type 1: silty to slightly silty sand and clayey sand (SM, SM-SW, SC), Type 2: silty to slightly silty sandstone (SM, SM-SW), and Type 3: sandy siltstone to sandy claystone (ML, CL). Each soil type was classified in accordance with the Unified Soil Classification System (USCS) using the laboratory testing results and the observations made during drilling.

Soil Type 1 classified as silty sand to slightly silty sand and clayey sand (SM, SM-SW, SC). The sand was encountered in all of the test borings at the existing surface grade extending to depths ranging from 1 to 8 feet below ground surface (bgs). Standard Penetration Testing on the sand resulted in N-values of 10 to 43 bpf indicating medium dense to dense states. Water content and grain size testing resulted in approximately 2 to 13 percent water content with 8 to 30 percent of the soil size particles passing the No. 200 sieve. Atterberg Limits indicated that the sand is non-plastic. Swell/Consolidation testing on a lens of clayey sand in Test Boring No. 12 resulted in a volume change of 1.9 percent, which indicates a moderate expansion potential. Sulfate testing resulted in less than 0.01 percent soluble sulfate by weight, indicating a negligible potential for below grade concrete degradation due to sulfate attack.

Soil Type 2 classified as slightly silty to silty sandstone (SM, SM-SW). The silty to slightly silty sandstone was encountered in all of the test borings at depths ranging from 1 to 8 feet extending to the depths of 14 feet to the termination of the test borings (20 feet bgs). Standard

Penetration Testing on the silty to slightly silty sandstone resulted in an N-values of equal to or greater than 50 bpf indicating very dense states. Water content and grain size testing resulted in 4 to 15 percent water content and approximately 11 to 24 percent of the soil size particles passing the No. 200 sieve. Atterberg Limits indicated that the sandstone is non-plastic. Sulfate testing resulted in less than 0.01 percent soluble sulfate by weight, indicating a negligible potential for below grade concrete degradation due to sulfate attack.

Soil Type 3 classified as sandy siltstone to sandy claystone (ML, CL). The siltstone and claystone were encountered Test Borings 3, 6, 7, and 11 at depths ranging from 14 to 19 feet extending to the depth of termination (20 feet bgs). Standard Penetration Testing on the siltstone and claystone resulted in an N-values of 34 to greater than 50 bpf indicating very stiff to hard consistencies. Water content and grain size testing resulted in 11 to 15 percent water content and approximately 58 and 84 percent of the soil size particles passing the No. 200 sieve. Atterberg Limits testing on the siltstone resulted in a liquid limit of 38 and plastic index of 12. A Swell/Consolidation test resulted in a consolidation of 2.8 and 1.8 percent for the siltstone and claystone, which indicates moderate expansion potential. Sulfate testing resulted in 0.00 percent soluble sulfate by weight, indicating a negligible potential for below grade concrete degradation due to sulfate attack.

The Test Boring Logs are presented in Appendix B. Laboratory Test Results are presented in Appendix C. A Summary of Laboratory Test Results is presented in Table 1.

5.5 Groundwater

Groundwater was encountered in Test Boring Nos. 2, 3, 4, 6, 7, 9, 10, and 11 at depths ranging from 6 to 15½ feet bgs subsequent to drilling. Depth to groundwater is shown in the Test Boring Location Map, Figure 2, and on each test boring log. Areas of water, seasonal shallow groundwater water, and potential seasonal shallow groundwater have been mapped along the drainages on-site. These areas are discussed in the following section. Fluctuation in groundwater conditions may occur due to variations in rainfall and other factors not readily apparent at this time.

It should be noted that in the sandy materials on-site, some groundwater conditions might be encountered due to the variability in the soil profile. Isolated sand and gravel layers within the

soils, sometimes only a few feet in thickness and width, can carry water in the subsurface. Groundwater may also flow on top of the underlying bedrock. Builders and planners should be cognizant of the potential for the occurrence of such subsurface water features during construction on-site and deal with each individual problem as necessary at the time of construction.

6.0 ENGINEERING GEOLOGY – IDENTIFICATION AND MITIGATION OF GEOLOGIC HAZARDS

As mentioned previously, detailed mapping has been performed on this site to produce an Engineering Geology Map Figure 7. This map shows the location of various geologic conditions of which the developers should be cognizant during the planning, design and construction stages of the project. These hazards and the recommended mitigation techniques are as follows:

Artificial Fill - constraint

These are recent man-made fill deposits associated with the earthen dam located in the eastern portion of the site. It is anticipated that this dam will be removed and filled during the site grading process. At the time of the investigation, the condition of the dam was observed, and appeared to be in good condition.

Mitigation: The earthen dam lies within a defined drainage and should be avoided as building sites. The fill on this site is considered uncontrolled for construction purposes. Any uncontrolled fill encountered beneath foundations will require removal and recompaction at a minimum of 95% of its maximum Modified Procter Dry Density, ASTM D-1557.

Collapsible Soils - constraint

The majority of the soils encountered on-site do not exhibit collapsible characteristics, however, areas of loose soils may be encountered on the site. Should loose or collapsible soils be encountered beneath foundations, recompaction and moisture conditioning of the upper 2 feet of soil at 95% of its maximum Modified Proctor Dry Density ASTM D-1557 will be required. Exterior flatwork and parking areas may also experience movement. Proofrolling and recompaction of soft areas should be performed during site work.

Expansive Soils - constraint

Expansive soils were encountered in the test borings drilled on site. These occurrences are typically sporadic; therefore, none have been indicated on the maps. The clays and claystone, if encountered at foundation grade, can cause differential movement in structures. These occurrences should be identified and dealt with on an individual basis.

Mitigation Should expansive soils be encountered beneath foundations, mitigation will be necessary. Mitigation of expansive soils will require special foundation design. Overexcavation and replacement with non-expansive soils at a minimum of 95% of its maximum Modified Proctor Dry Density, ASTM D-1557 is a suitable mitigation, which is common in the area. Floor slabs on expansive soils should be expected to experience movement. Overexcavation and replacement has been successful in minimizing slab movements. The use of structural floors should be considered for basement construction on highly expansive clays. Final recommendations should be determined after additional investigation of each building site.

Areas of Erosion - constraint

Due to the nature of the soils on this site, virtually all the soils are subject to erosion by wind and water. Areas of erosion can occur across the entire site, particularly if the soils are disturbed during construction. Vegetation reduces the potential for erosion. The areas identified where erosion is actually taking place may require check dams, regrading and revegetation using channel lining mats to anchor vegetation. Further recommendations for erosion control are discussed under Section 8.0 "Erosion Control" of this report. Recommendations pertaining to revegetation may require input from a qualified landscape architect and/or the Natural Resource Conservation Service (previously Soil Conservation Service).

Groundwater and Floodplain Areas - constraint

Two drainages exist in the eastern and western portions of the site that have been identified as areas of seasonally wet and/or seasonally high groundwater areas. Water was observed in the pond located in the eastern portion of the site. Water was not observed in the drainage areas on the site. The site is not mapped within floodplain zones according to the FEMA Map Nos. 08041CO533G and 08041CO535G, Figure 8 (Reference 8). These areas are discussed as follows:

SW – Seasonal Shallow Groundwater Area - constraint

In these areas, we would anticipate periodic high subsurface moisture conditions and frost heave potential on a seasonal basis. Additional, highly organic soils could be encountered in these areas. These areas lie within defined drainages and it is anticipated they will be avoided by development. Any structures in or adjacent to these areas should follow the mitigation discussed below.

Mitigation: Foundations must have a minimum 30-inch depth for frost protection. In areas where high subsurface moisture conditions are anticipated periodically, subsurface perimeter drains are recommended to help prevent the intrusion of water into areas below grade. Typical drain details are presented in Figures 9 through 11. Any grading in these areas should be done to direct surface flow around construction to avoid areas of ponded water. Structures should not block drainages. All organic material should be completely removed prior to any fill placement. Finished floor levels must be located a minimum of one foot above floodplain levels.

PSW – Potentially Seasonal Shallow Groundwater Area - constraint

In these areas, we would anticipate the potential for periodically high subsurface moisture conditions, frost heave potential and highly organic soils. The majority of these areas lie within defined drainages which can likely be avoided by the proposed development or regraded. The same mitigation recommendations for the seasonal shallow groundwater areas apply to the potentially seasonal shallow groundwater areas.

Areas of Ponded Water - constraint

These are areas of standing water behind the earthen dam on site. We would not expect development in these areas. Either the dams can be avoided by construction or the areas may be completely regraded. Should complete regrading of the site be considered, all organic matter and soft, wet soils should be completely removed before filling. Any drainage into these areas should be rerouted in a non-erosive manner off of the site where it does not create areas of ponded water around proposed structures.

Radon - hazard

Radon levels for the area have been reported by the Colorado Geologic Survey in the open file, Report No. 91-4 (Reference 9). Average Radon levels for the 80908-zip code is 3.40 pCi/l. The following is a table of radon levels in this area:

80908	
0 < 4 pCi/l	50.00%
4 < 10 pCi/l	50.00%
10 < 20 pCi/l	0.00%
> 20 pCi/l	0.00%

Mitigation:

The potential for high radon levels is present for the site. Build-up of radon gas can usually be mitigated by providing increased ventilation of basement and crawlspace and sealing joints. Specific requirements for mitigation should be based on site specific testing.

6.1 Relevance of Geologic Conditions to Land Use Planning

As mentioned earlier in this report, we understand that the development will be primarily single family residential with some neighborhood commercial parcels with parks/open spaces and other associated site improvements. A detention pond is proposed in the southern portion of the site. It is our opinion that the existing geologic and engineering geologic conditions will impose some minor constraints on the proposed development and construction. The most significant problems affecting development will be those associated with the pond and drainages on site that it is anticipated will be mitigated by site grading. Other hazards on site may be satisfactorily mitigated through proper engineering design and construction practices.

The upper materials are typically at medium dense to dense states. The granular soils encountered in the upper soil profiles of the test borings should provide good support for foundations. Loose soils if encountered at foundation depth will require mitigation. Foundations anticipated for the site are standard spread footings possibly in conjunction with overexcavation in areas of expansive soils or loose soils. Excavation is anticipated to be moderate with rubber-tired equipment for the site sand materials, and will require track mounted equipment for the dense sandstone. Expansive layers may also be encountered in the soil and bedrock on this

site. Areas of expansive soils encountered on site are sporadic; therefore, none have been indicated on the maps. Expansive soils, if encountered, will require special foundation design and/or overexcavation. These soils will not prohibit development.

Areas of seasonal and potentially seasonal high groundwater areas and ponded water were encountered on site. The majority of these areas will likely be mitigated with site grading, or can be avoided by construction. Drains may be necessary for structures adjacent to these areas to help prevent the intrusion of water into areas below grade. Typical drain details are presented in Figures 9 through 11. The site does not lie within any floodplain zones according to the FEMA Map Nos. 08041CO533G and 08041CO535G, dated December 7, 2108 (Figure 8, Reference 8). Exact locations of floodplain and specific drainage studies are beyond the scope of this report.

Areas of fill were observed on site associated with dams. The dam located on the eastern side of the site, and it is anticipated it will be removed and regraded during site grading. Any uncontrolled fill encountered beneath foundations should be removed and recompacted at a minimum of 95% of its maximum Modified Proctor Dry Density, ASTM D-1557. The existing embankment slopes generally appear to be in good condition. The spillway is an earth/vegetated channel on the west side of the embankment. Periodic observations of the embankment are recommended especially after large storm events.

Areas of erosion and gullying may require the construction of check dams and revegetation if construction encroaches on these areas. General recommendations for erosion control are discussed under Section 8.0 "Erosion Control".

In summary, development of the site can be achieved if the items mentioned above are mitigated. These items can be mitigated through proper design and construction or through avoidance. Investigation on each lot is recommended prior to construction.

7.0 ECONOMIC MINERAL RESOURCES

Some of the sandy materials on-site could be considered a low-grade sand resource. According to the *El Paso County Aggregate Resource Evaluation Map* (Reference 10), the area is not mapped with any aggregate deposits. According to the *Atlas of Sand, Gravel and Quarry Aggregate Resources, Colorado Front Range Counties* distributed by the Colorado Geological Survey (Reference 11), areas of the site are not mapped with any resources. According to the *Evaluation of Mineral and Mineral Fuel Potential* (Reference 12), the area of the site has been mapped as "Fair" for industrial minerals. However, considering the silty nature of much of these materials and abundance of similar materials through the region and the close proximity to developed land, they would be considered to have little significance as an economic resource.

According to *the Evaluation of Mineral and Mineral Fuel Potential of El Paso County State Mineral Lands* (Reference 12), the site is mapped within the Denver Basin Coal Region. However, the area of the site has been mapped as "Poor" for coal resources. No active or inactive mines have been mapped in the area of the site. No metallic mineral resources have been mapped on-site (Reference 12).

The site has been mapped as "Fair" for oil and gas resources (Reference 12). No oil or gas fields have been discovered in the area of the site. The sedimentary rocks in the area may lack the geologic structure for trapping oil or gas; therefore, it may not be considered a significant resource. Hydraulic fracturing is a new method that is being used to extract oil and gas from rocks. It utilizes pressurized fluid to extract oil and gas from rocks that would not normally be productive. The area of the site has not been explored to determine if the rocks underlying the site would be commercially viable utilizing hydraulic fracturing. The practice of hydraulic fracturing has come under review due to concerns about environmental impacts, health and safety.

8.0 ROADWAY AND EMBANKMENT CONSTRUCTION RECOMMENDATIONS

In general, the site soils are suitable for the proposed roadways and embankments. Groundwater should be expected to be encountered in deeper cuts and along drainages and low-lying areas. If excavations encroach on the groundwater level unstable soil conditions may be encountered. Excavation of saturated soils will be difficult with rubber-tired equipment. Stabilization using shot rock or geogrids may be necessary.

Any areas to receive fill should have all topsoil, organic material or debris removed. Prior to fill placement Entech should observe the subgrade. Fill must be properly benched and compacted to minimize potentially unstable conditions in slope areas. Fill slopes should be 3:1. The subgrade should be scarified and moisture conditioned to within 2% of optimum moisture content and compacted to a minimum of 95% of its maximum Modified Proctor Dry Density, ASTM D-1557, prior to placing new fill. Areas receiving fill may require stabilization with rock or fabric if shallow groundwater conditions are encountered.

New fill should be placed in thin lifts not to exceed 6 inches after compaction while maintaining at least 95% of its maximum Modified Proctor Dry Density, ASTM D-1557. These materials should be placed at a moisture content conducive to compaction, usually 0 to ±2% of Proctor optimum moisture content. The placement and compaction of fill should be observed and tested by Entech during construction. Entech should approve any import materials prior to placing or hauling them to the site. Additional investigation will be required for pavement designs once roadway grading is completed and utilities are installed.

9.0 EROSION CONTROL

The soil types observed on the site are mildly to highly susceptible to wind erosion, and moderately to highly susceptible to water erosion. A minor wind erosion and dust problem may be created for a short time during and immediately after construction. Should the problem be considered severe enough during this time, watering of the cut areas or the use of chemical palliative may be required to control dust. However, once construction has been completed and vegetation re-established, the potential for wind erosion should be considerably reduced.

With regard to water erosion, loosely compacted soils will be the most susceptible to water erosion, residually weathered soils become increasingly less susceptible to water erosion. For the typical soils observed on-site, allowable velocities or unvegetated and unlined earth channels would be on the order of 3 to 4 feet/second, depending upon the sediment load carried by the water. Permissible velocities may be increased through the use of vegetation to something on the order of 4 to 7 feet/second, depending upon the type of vegetation established. Should the anticipated velocities exceed these values, some form of channel lining material may be required to reduce erosion potential. These might consist of some of the synthetic channel lining materials on the market or conventional riprap. In cases where ditch-lining materials are still insufficient to control erosion, small check dams or sediment traps may be required. The check dams will serve to reduce flow velocities, as well as provide small traps for containing sediment. The determination of the amount, location and placement of ditch linings, check dams and of the special erosion control features should be performed by or in conjunction with the drainage engineer who is more familiar with the flow quantities and velocities.

Cut and fill slope areas will be subjected primarily to sheetwash and rill erosion. Unchecked rill erosion can eventually lead to concentrated flows of water and gully erosion. The best means to combat this type of erosion is, where possible, the adequate re-vegetation of cut and fill slopes. Cut and fill slopes having gradients more than three (3) horizontal to one (1) vertical become increasingly more difficult to revegetate successfully. Therefore, recommendations pertaining to the vegetation of the cut and fill slopes may require input from a qualified landscape architect and/or the Soil Conservation Service.

10.0 CLOSURE

It is our opinion that the existing geologic engineering and geologic conditions will impose some constraints on development and construction of the site. The majority of these conditions can be mitigated through proper engineering design and construction practices. The proposed development and use are consistent with anticipated geologic and engineering geologic conditions.

It should be pointed out that because of the nature of data obtained by random sampling of such variable and non-homogeneous materials as soil and rock, it is important that we be informed of any differences observed between surface and subsurface conditions encountered in construction and those assumed in the body of this report. Individual investigations for building sites will be required prior to construction. Construction and design personnel should be made familiar with the contents of this report. Reporting such discrepancies to Entech Engineering, Inc. soon after they are discovered would be greatly appreciated and could possibly help avoid construction and development problems.

This report has been prepared for Elite Properties of America, LLC. for application to the proposed project in accordance with generally accepted geologic soil and engineering practices. No other warranty expressed or implied is made.

We trust that this report has provided you with all the information that you required. Should you require additional information, please do not hesitate to contact Entech Engineering, Inc.

BIBLIOGRAPHY

1. Entech Engineering, Inc., dated October 25, 2021. *Preliminary Subsurface Soil Investigation, Poco Road and Vollmer Road, Parcel Nos. 52280-00-024 and 52280-00-025, El Paso County, Colorado.* Entech Job No. 212381.

2. Bryant, Bruce; McGrew, Laura W, and Wobus, Reinhard A. 1981. *Geologic Structure Map of the Denver 1° x 2° Quadrangle, North-Central Colorado*. Sheet 2. U.S. Geologic Survey. Map I-1163.

3. Natural Resource Conservation *Service,* September 22, 2015*. Web Soil Survey.* United States Department Agriculture, http://websoilsurvey.sc.egov.usda.gov/App/HomePage.htm.

4. United States Department of Agriculture Soil Conservation Service. June 1981. *Soil Survey of El Paso County Area, Colorado.*

5. Madole, Richard F., 2003. *Geologic Map of the Falcon NW Quadrangle, El Paso County, Colorado*. Colorado Geological Survey. Open-File Report 03-8.

6. Trimble, Donald E. and Machette, Michael N. 1979. *Geologic Map of the Colorado Springs-Castle Rock Area, Front Range Urban Corridor, Colorado*. USGS, Map I-857-F.

7. Bryant, Bruce; McGrew, Laura W. and Wobus, Reinhard A. 1981. *Geologic Map of the Denver 1° x 2° Quadrangle, North-Central Colorado*. U.S. Geologic Survey. Map 1-1163.

8. Federal Emergency Management Agency. December 7, 2018. *Flood Insurance Rate Maps for El Paso County, Colorado and Incorporated Areas.* Map Numbers 08041CO533G and 08041CO535G.

9. Colorado Geological Survey. 1991. *Results of the 1987-88 EPA Supported Radon Study in Colorado.* Open-file Report 91-4.

10. El Paso County Planning Development. December 1995. *El Paso County Aggregate Resource Evaluation Maps.*

11. Schwochow, S.D.; Shroba, R.R. and Wicklein, P.C. 1974. *Atlas of Sand, Gravel, and Quarry Aggregate Resources, Colorado Front Range Counties*. Colorado Geological Survey. Special Publication 5-B.

12. Keller, John W.; TerBest, Harry and Garrison, Rachel E. 2003. *Evaluation of Mineral and Mineral Fuel Potential of El Paso County State Mineral Lands Administered by the Colorado State Land Board*. Colorado Geological Survey. Open-File Report 03-07.

TABLE

Table 1: Summary of Bedrock and Groundwater Depths

Test Boring Number	Depth of Bedrock (ft.)	Depth to Bedrock (ft.)
1	3	>20
2	8	6
3	3	14
4	2	7
5	6	>20
6	3	11.5
7	1	15.5
8	1	>20
9	8	14
10	3	12
11	6	15
12	8	>20

FIGURES

ENTECH
ENGINEERING, INC.
505 ELKTON DRIVE
COLORADO SPRINGS, CO. 80907 (719) 531-5599

VICINITY MAP
JAYNES SITE
POCO ROAD & VOLLMER ROAD
EL PASO COUNTY, CO.
FOR: ELITE PROPERTIES OF AMERICA

DRAWN:	DATE:	CHECKED:	DATE:
LLL	3/30/22		

JOB NO.: 212381

FIG NO.: 1

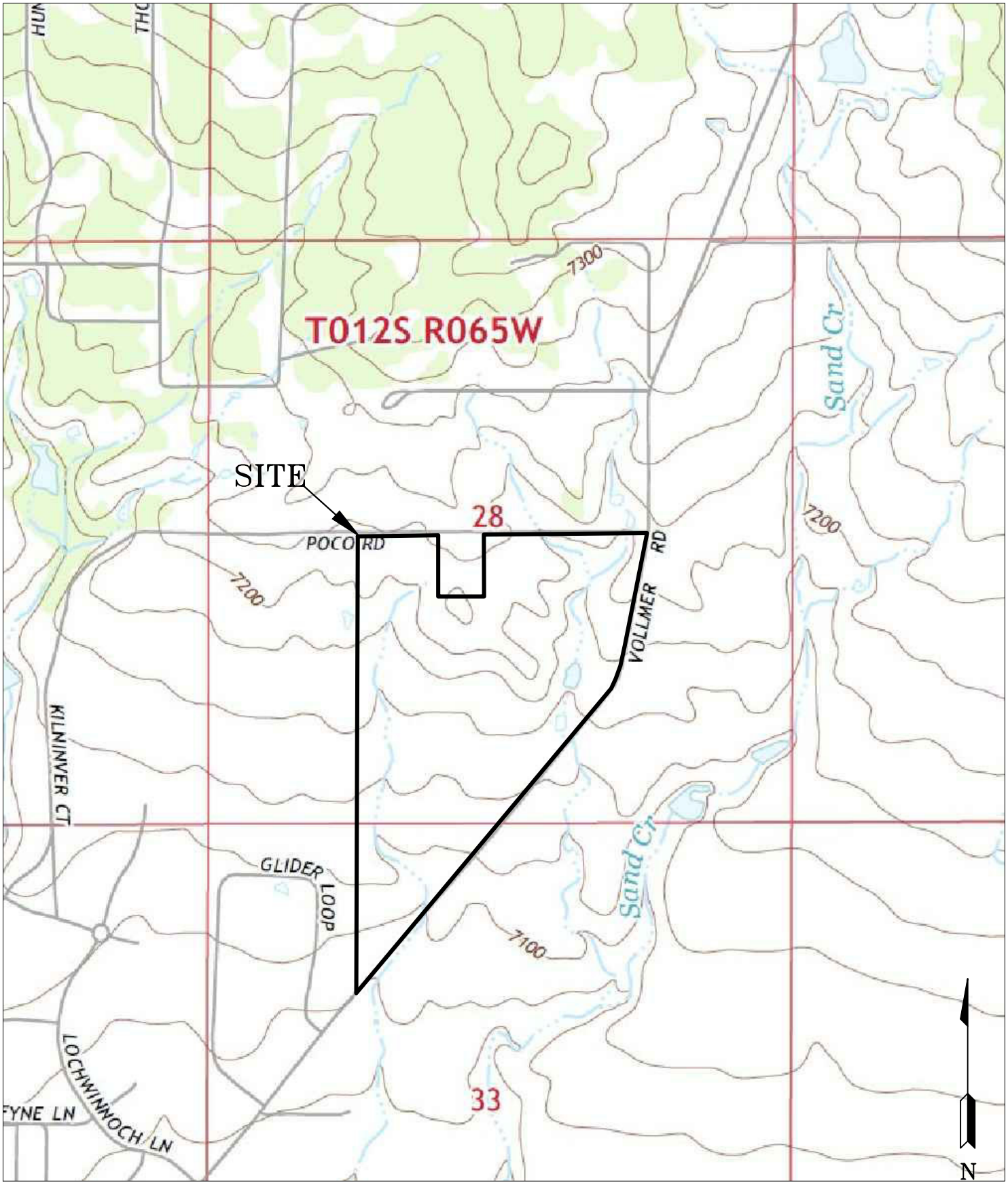

ENTECH
ENGINEERING, INC.
505 ELKTON DRIVE
COLORADO SPRINGS, CO. 80907 (719) 531-5599

USGS MAP
JAYNES SITE
POCO ROAD & VOLLMER ROAD
EL PASO COUNTY, CO.
FOR: ELITE PROPERTIES OF AMERICA

DRAWN:	DATE:	CHECKED:	DATE:
LLL	3/30/22		

JOB NO.: 212381

FIG NO.: 2

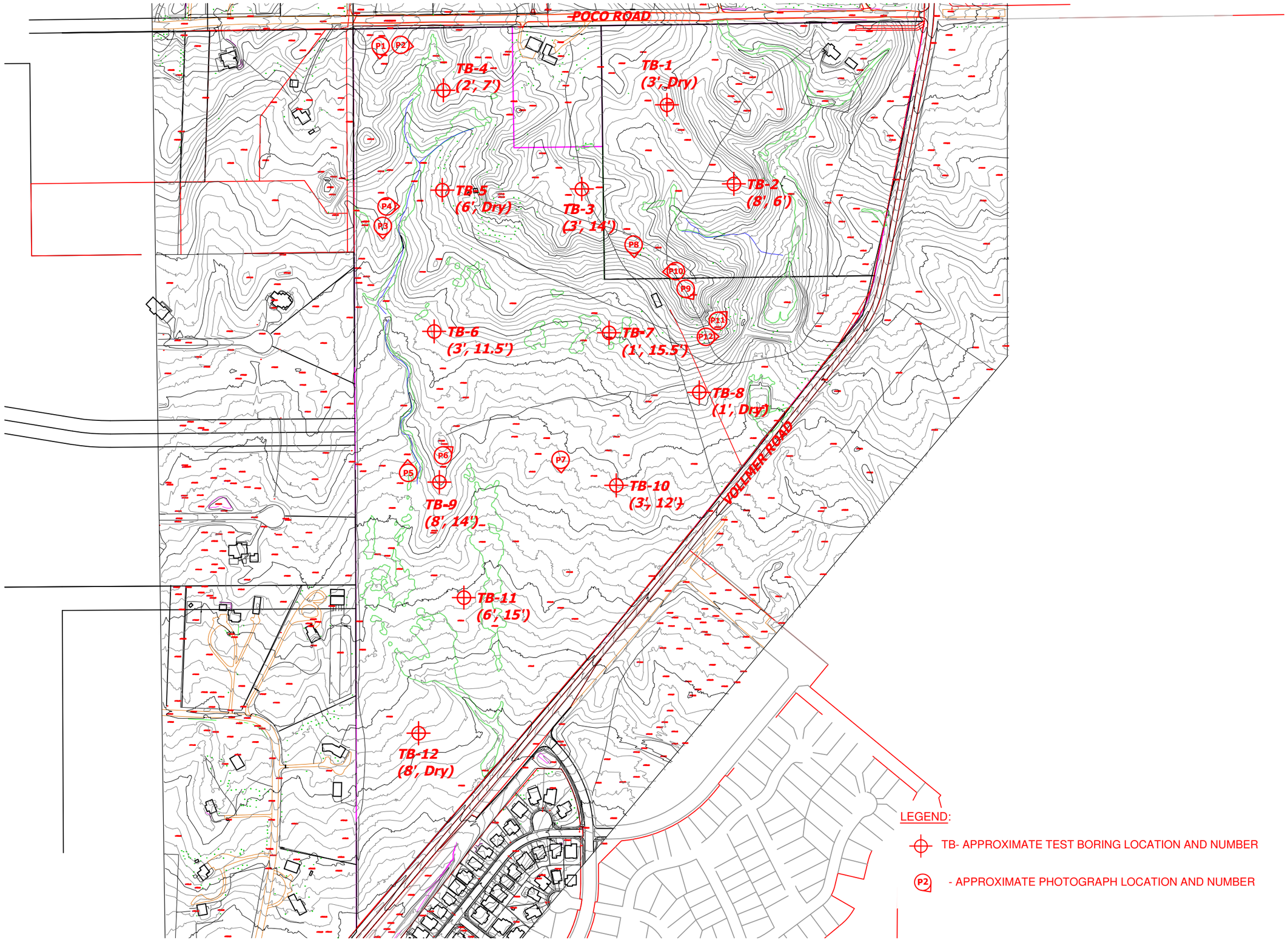

REVISION	BY

ENTECH ENGINEERING, INC.
505 ELKTON DRIVE
COLORADO SPRINGS, CO. 80907
(719) 531-5599

SITE PLAN/TEST BORING LOCATION MAP
JAYNES SITE
POCO ROAD & VOLLMER ROAD
EL PASO COUNTY, CO.
FOR: ELITE PROPERTIES OF AMERICA

DRAWN	LLL
CHECKED	
DATE	3/30/22
SCALE	AS SHOWN
JOB NO.	212381
FIGURE No.	3

LAND USE TABLE

Land Use	Acres (AC)	Minimum No. of units	Maximum No. of units	Percentage Land Use (%)
Residential				
1-3 DU/AC	45.5	46	137	32
3-5 DU/AC	37.9	114	190	27
5-12 DU/AC	24	120	288	17
Neighborhood Commercial	4			3
Park	3.2			2
Buffer	15.5			11
Open Space/Detention	4.7			3
ROW	7.3			5
TOTAL	**142.1**	**279**	**614**	**100**

REVISION	BY

ENTECH
ENGINEERING, INC.
505 ELKTON DRIVE
COLORADO SPRINGS, CO. 80907
(719) 531-5599

PROPOSED CONCEPT PLAN
JAYNES SITE
POCO ROAD & VOLLMER ROAD
EL PASO COUNTY, CO.
FOR: ELITE PROPERTIES OF AMERICA

DRAWN	LLL
CHECKED	
DATE	3/30/22
SCALE	AS SHOWN
JOB NO.	212381
FIGURE No.	4

N

ENTECH
ENGINEERING, INC.
505 ELKTON DRIVE
COLORADO SPRINGS, CO. 80907 (719) 531-5599

SOIL SURVEY MAP
JAYNES SITE
POCO ROAD & VOLLMER ROAD
EL PASO COUNTY, CO.
FOR: ELITE PROPERTIES OF AMERICA

DRAWN:	DATE:	CHECKED:	DATE:
LLL	3/30/22		

JOB NO.: 212381

FIG NO.: 5

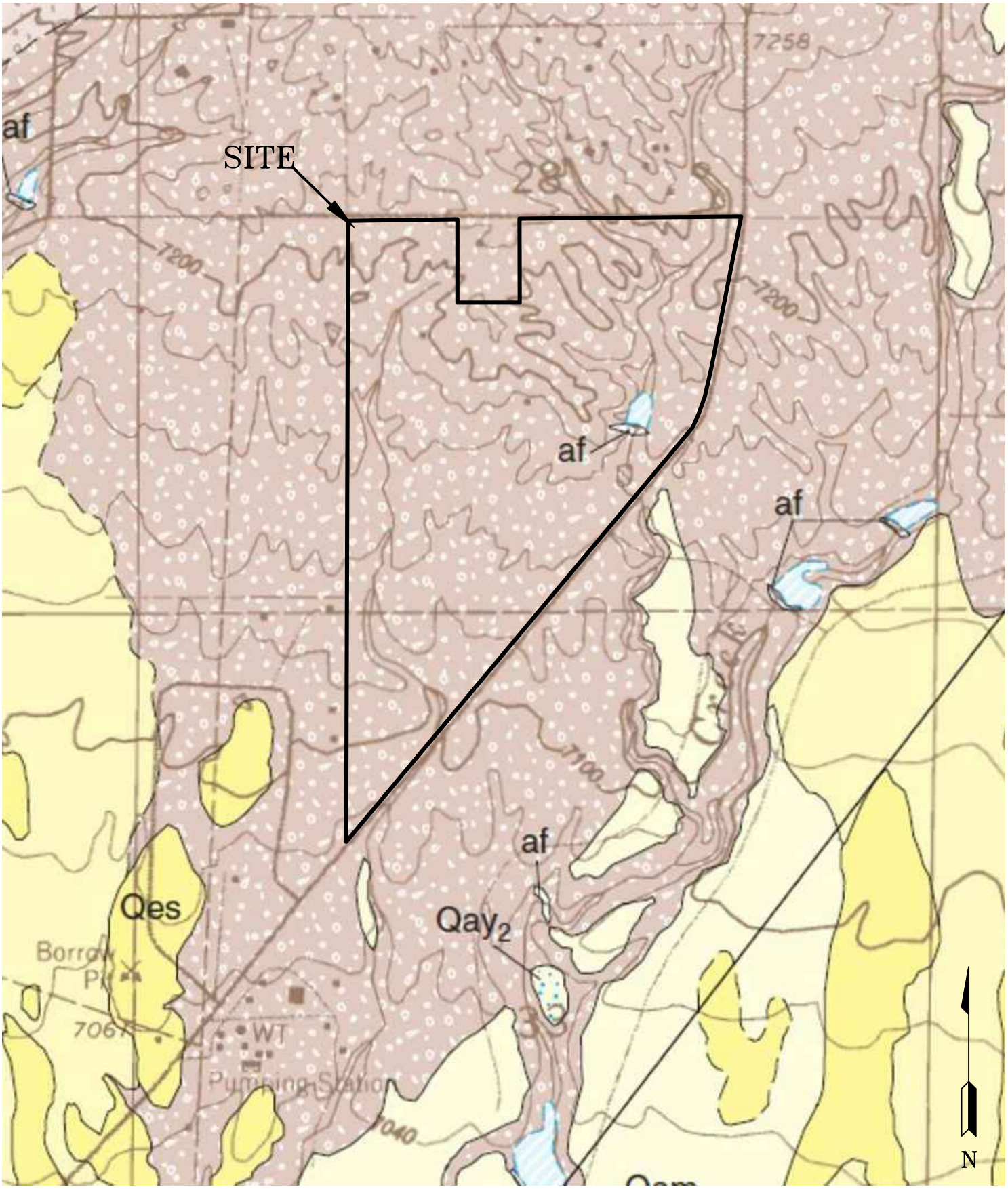

ENTECH ENGINEERING, INC.
505 ELKTON DRIVE
COLORADO SPRINGS, CO. 80907 (719) 531-5599

FALCON NW QUADRANGLE GEOLOGIC MAP
JAYNES SITE
POCO ROAD & VOLLMER ROAD
EL PASO COUNTY, CO.
FOR: ELITE PROPERTIES OF AMERICA

DRAWN:	DATE:	CHECKED:	DATE:
LLL	3/30/22		

JOB NO.: 212381

FIG NO.: 6

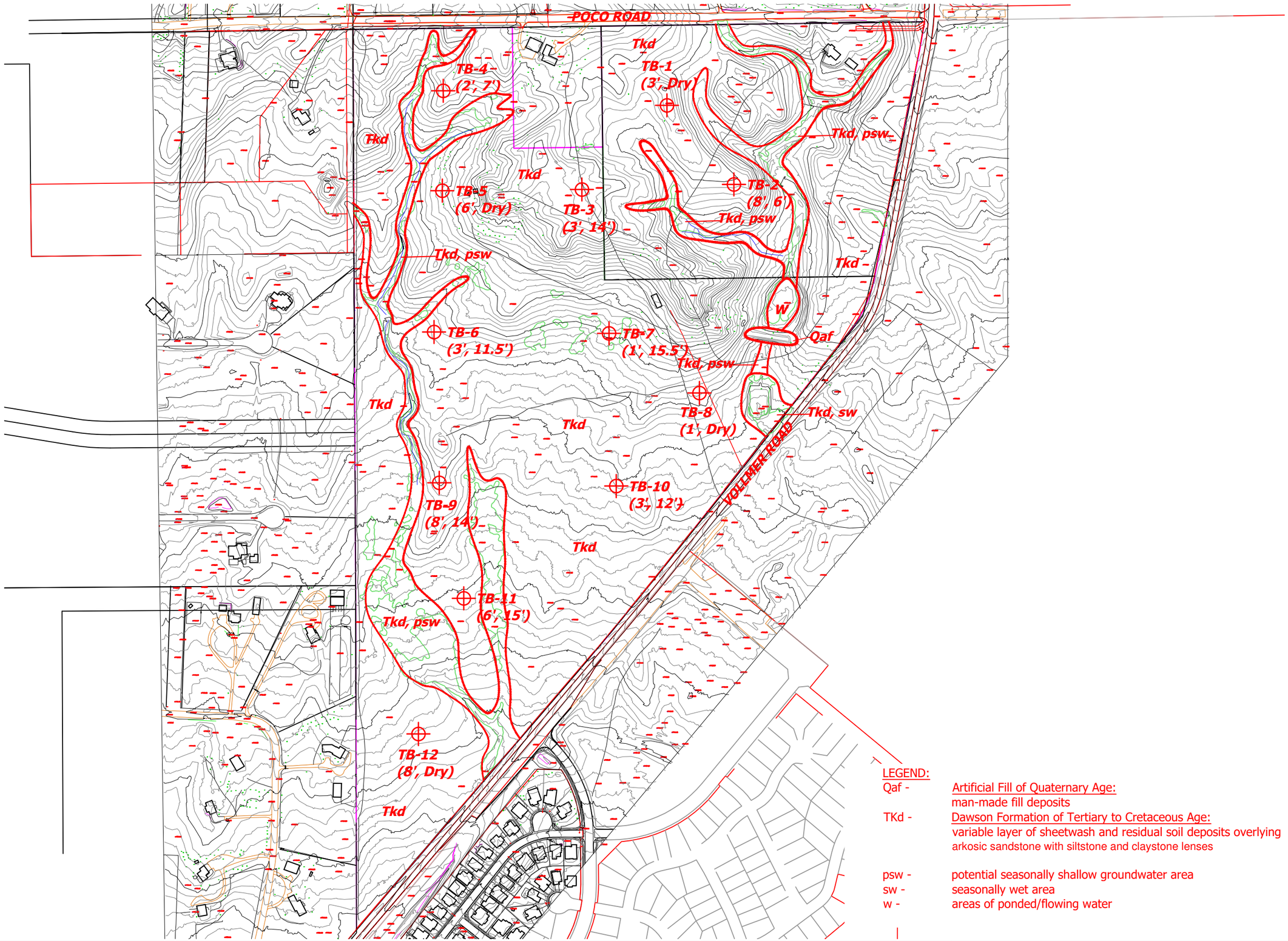

LEGEND:

Qaf - Artificial Fill of Quaternary Age:
man-made fill deposits

TKd - Dawson Formation of Tertiary to Cretaceous Age:
variable layer of sheetwash and residual soil deposits overlying arkosic sandstone with siltstone and claystone lenses

psw - potential seasonally shallow groundwater area
sw - seasonally wet area
w - areas of ponded/flowing water

REVISION	BY

ENTECH ENGINEERING, INC.
505 ELKTON DRIVE
COLORADO SPRINGS, CO. 80907 (719) 531-5599

GEOLOGY/ENGINEERING GEOLOGY MAP
JAYNES SITE
POCO ROAD & VOLLMER ROAD
EL PASO COUNTY, CO.
FOR: ELITE PROPERTIES OF AMERICA

DRAWN	LLL
CHECKED	
DATE	3/30/22
SCALE	AS SHOWN
JOB NO.	212381
FIGURE No.	7

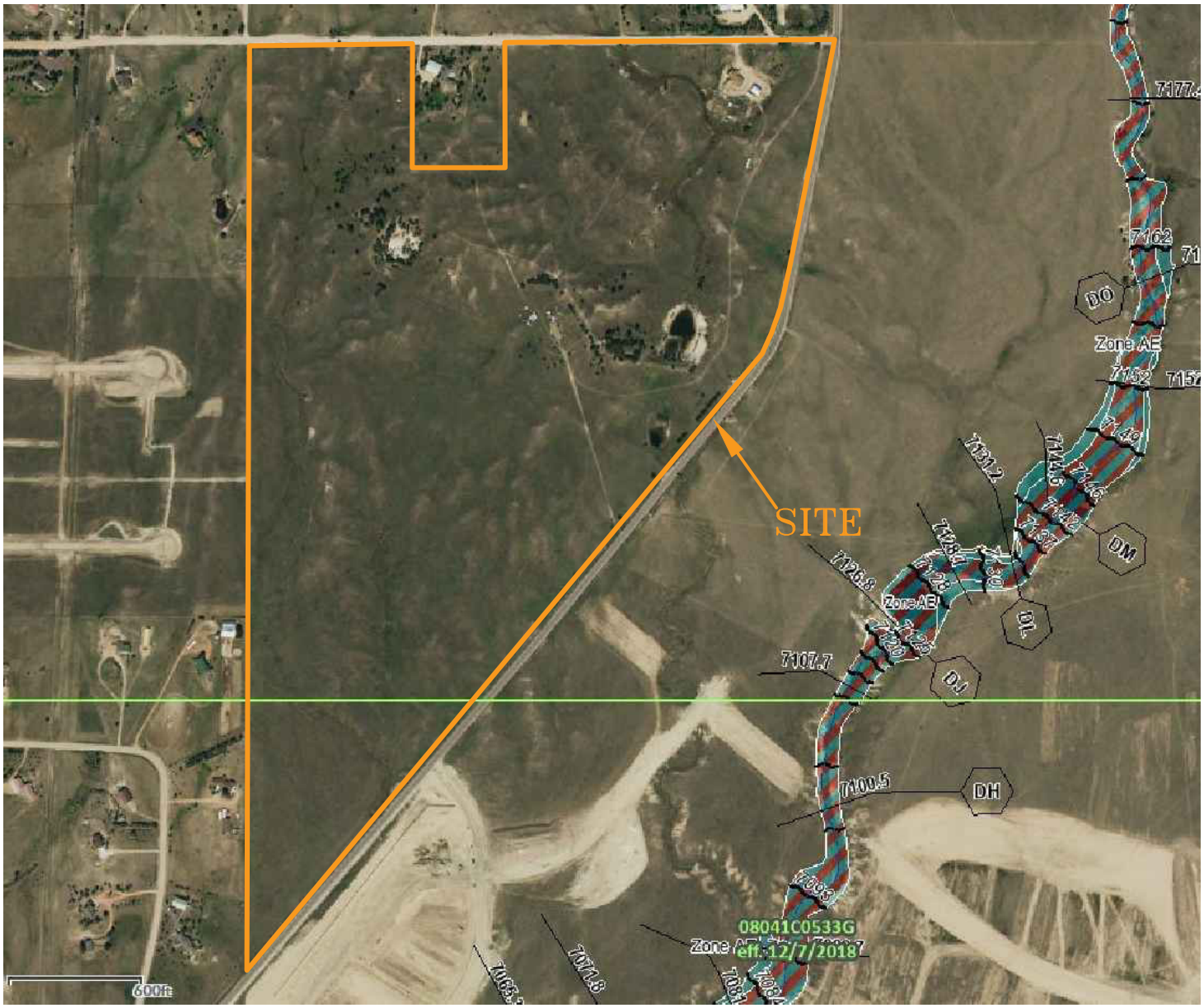

N

ENTECH
ENGINEERING, INC.
505 ELKTON DRIVE
COLORADO SPRINGS, CO. 80907 (719) 531-5599

FLOODPLAIN MAP
JAYNES SITE
POCO ROAD & VOLLMER ROAD
EL PASO COUNTY, CO.
FOR: ELITE PROPERTIES OF AMERICA

DRAWN:	DATE:	CHECKED:	DATE:
LLL	3/30/22		

JOB NO.: 212381

FIG NO.: 8

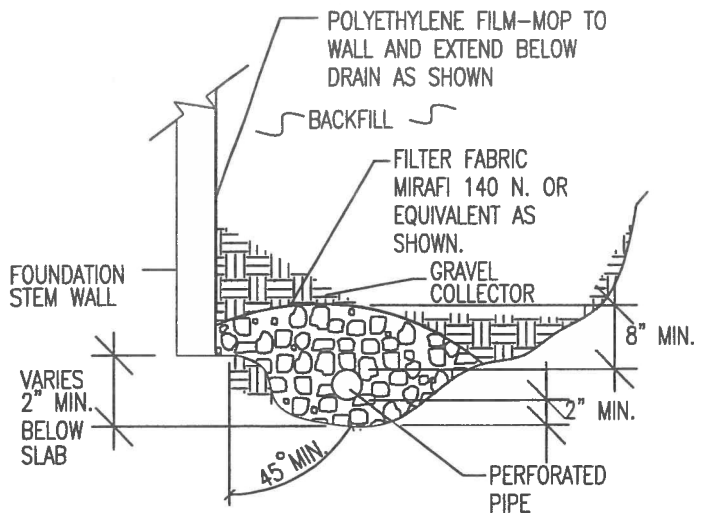

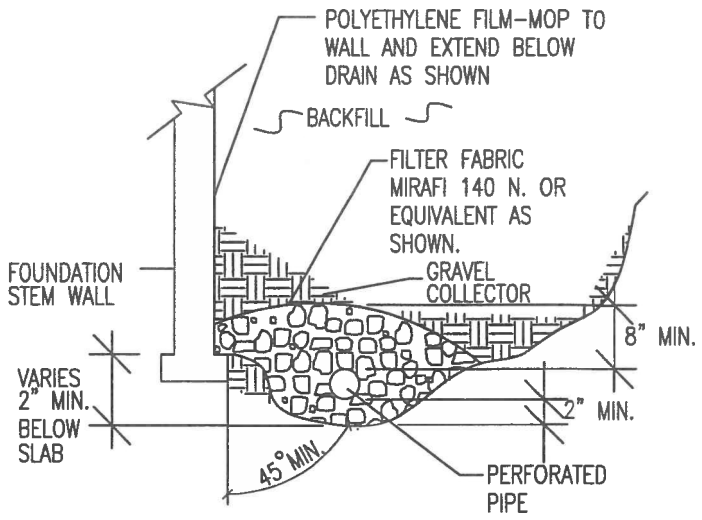

NOTES:

-GRAVEL SIZE IS RELATED TO DIAMETER OF PIPE PERFORATIONS-85% GRAVEL GREATER THAN 2x PERFORATION DIAMETER.

-PIPE DIAMETER DEPENDS UPON EXPECTED SEEPAGE. 4-INCH DIAMETER IS MOST OFTEN USED.

-ALL PIPE SHALL BE PERFORATED PLASTIC. THE DISCHARGE PORTION OF THE PIPE SHOULD BE NON-PERFORATED PIPE.

-FLEXIBLE PIPE MAY BE USED UP TO 8 FEET IN DEPTH, IF SUCH PIPE IS DESIGNED TO WITHSTAND THE PRESSURES. RIGID PLASTIC PIPE WOULD OTHERWISE BE REQUIRED.

-MINIMUM GRADE FOR DRAIN PIPE TO BE 1% OR 3 INCHES OF FALL IN 25 FEET.

-DRAIN TO BE PROVIDED WITH A FREE GRAVITY OUTFALL, IF POSSIBLE. A SUMP AND PUMP MAY BE USED IF GRAVITY OUT FALL IS NOT AVAILABLE.

ENTECH ENGINEERING, INC.
505 ELKTON DRIVE
COLORADO SPRINGS, CO. 80907 (719) 531-5599

PERIMETER DRAIN DETAIL

DRAWN:	DATE:	DESIGNED:	CHECKED:

JOB NO.: 212381

FIG NO.: 9

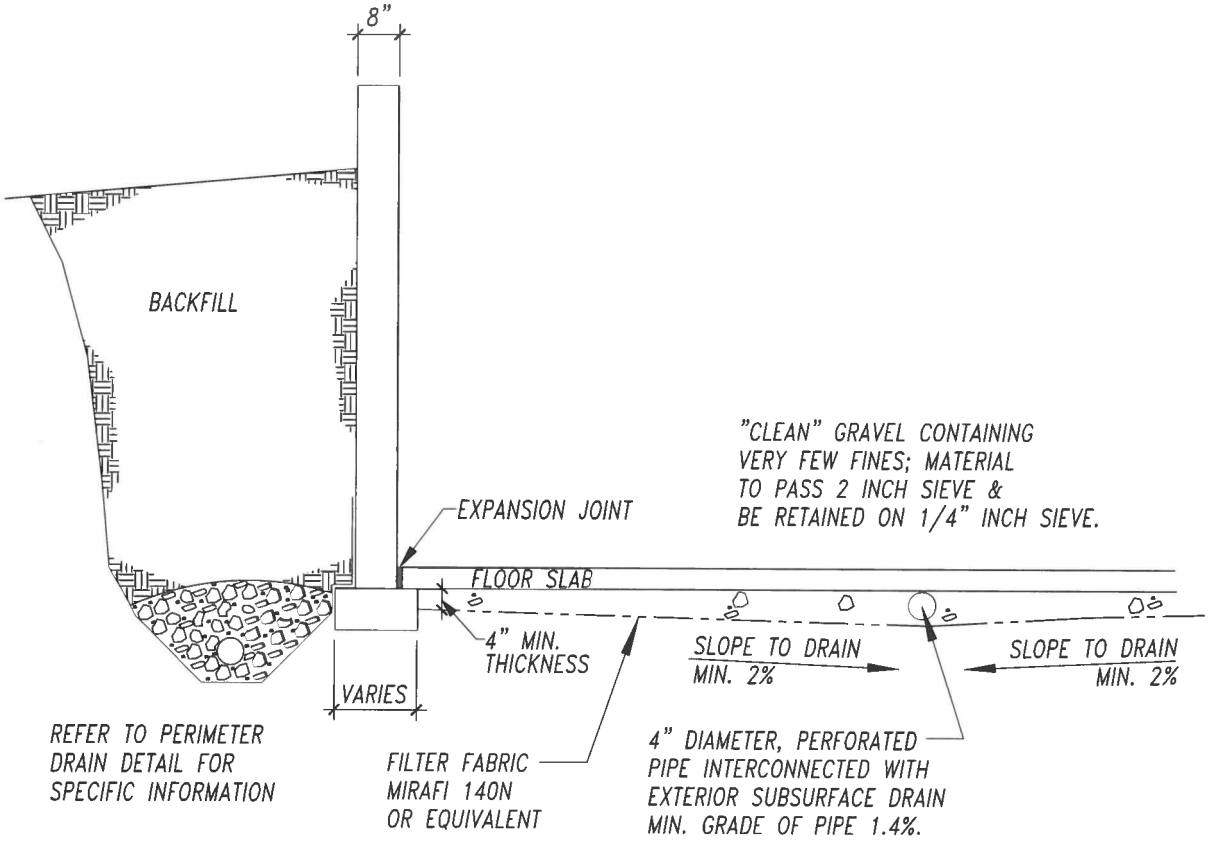

ENTECH
ENGINEERING, INC.
505 ELKTON DRIVE
COLORADO SPRINGS, CO. 80907 (719) 531-5599

TYP. UNDERSLAB DRAINAGE
LAYER (CAPILLARY BREAK)

DRAWN BY:	DATE:	DESIGNED BY:	CHECKED:

JOB NO.: 212381

FIG NO.: 10

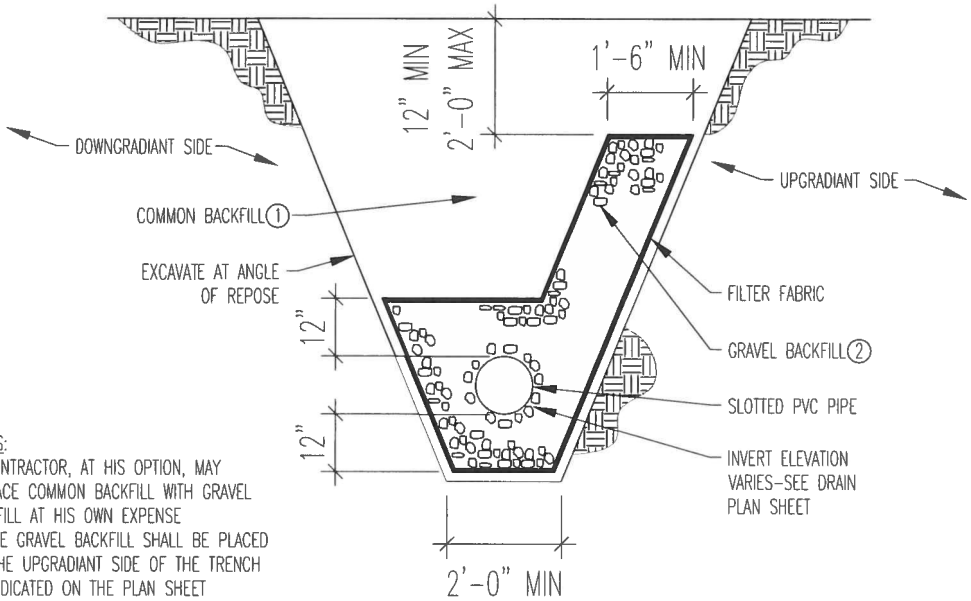

NOTES:
1. CONTRACTOR, AT HIS OPTION, MAY REPLACE COMMON BACKFILL WITH GRAVEL BACKFILL AT HIS OWN EXPENSE
2. THE GRAVEL BACKFILL SHALL BE PLACED ON THE UPGRADIANT SIDE OF THE TRENCH AS INDICATED ON THE PLAN SHEET

EXTEND PIPE TO DAYLIGHT

INTERCEPTOR DRAIN DETAIL

N.T.S.

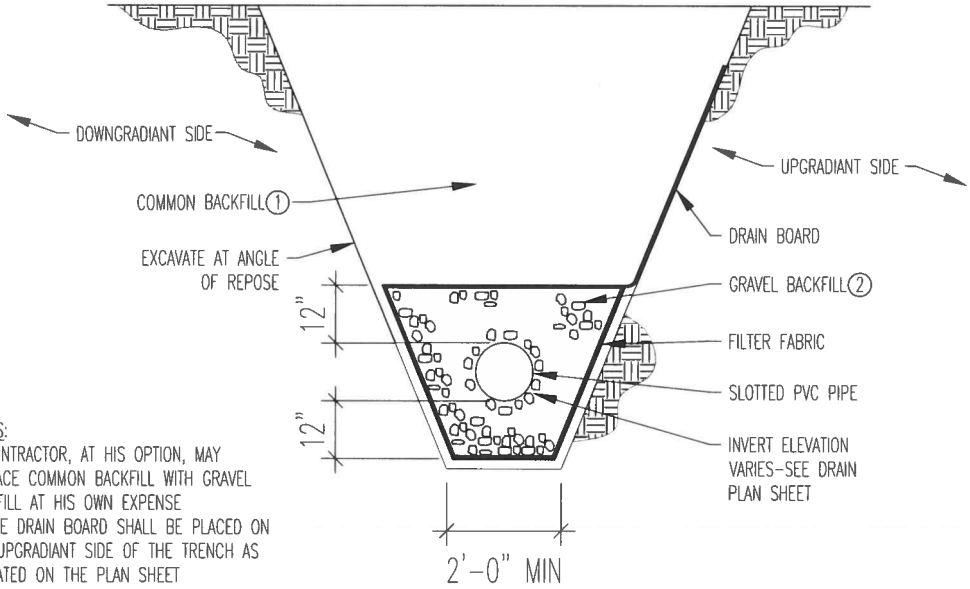

NOTES:
1. CONTRACTOR, AT HIS OPTION, MAY REPLACE COMMON BACKFILL WITH GRAVEL BACKFILL AT HIS OWN EXPENSE
2. THE DRAIN BOARD SHALL BE PLACED ON THE UPGRADIANT SIDE OF THE TRENCH AS INDICATED ON THE PLAN SHEET

EXTEND PIPE TO DAYLIGHT

INTERCEPTOR DRAIN DETAIL

N.T.S.

ENTECH ENGINEERING, INC.
505 ELKTON DRIVE
COLORADO SPRINGS, CO. 80907 (719) 531-5599

INTERCEPTOR DRAIN DETAIL

DRAWN BY:	DATE:	DESIGNED:	CHECKED:

JOB NO.: 212381

FIG. NO.: 11

APPENDIX A: Site Photographs

1

Looking south from the northwestern corner of the site.

October 19, 2021

2

Looking east from the northwestern portion of the site.

October 19, 2021

Job No. 212381

3

Looking south from the western side of the site.

October 19, 2021

4

Looking east from the western side of the site.

October 19, 2021

Job No. 212381

5

Looking north along drainage in the southwestern portion of the site.

October 19, 2021

6

Looking northeast from the southwestern portion of the site.

October 19, 2021

Job No. 212381

7

Looking south from the central portion of the site.

October 19, 2021

8

Looking south from the north-central portion of the site.

October 19, 2021

Job No. 212381

9

Looking southeast from the central portion of the site.

October 19, 2021

10

Looking west from the central portion of the site.

October 19, 2021

Job No. 212381

11

Looking northeast towards pond in the northeastern portion of the site.

October 19, 2021

12

Looking east along earthen dam in the eastern portion of the site.

October 19, 2021

Job No. 212381

APPENDIX B: Preliminary Subsurface Soil Investigation, Laboratory Testing Results, and Test Borings Logs, Entech Job No. 212381

TABLE 1

SUMMARY OF LABORATORY TEST RESULTS

CLIENT ELITE PROPERTIES
PROJECT POCO RD. AND VOLLMER RD.
JOB NO. 212381

SOIL TYPE	TEST BORING NO.	DEPTH (FT)	WATER (%)	DRY DENSITY (PCF)	PASSING NO. 200 SIEVE (%)	LIQUID LIMIT (%)	PLASTIC INDEX (%)	SULFATE (WT %)	FHA SWELL (PSF)	SWELL/ CONSOL (%)	UNIFIED CLASSIFICATION	SOIL DESCRIPTION
1	1	2-3			14.6	NV	NP	<0.01			SM	SAND, SILTY
1	5	5			15.2						SM	SAND, SILTY
1	6	2-3			15.8						SM	SAND, SILTY
1	9	5			15.8						SM	SAND, SILTY
1	11	2-3			7.9						SM-SW	SAND, SLIGHTLY SILTY
1	12	5	16.9	112.5	30.1					1.9	SC	SAND, CLAYEY
2	2	10			10.5	NV	NP	<0.01			SM-SW	SANDSTONE, SLIGHTLY SILTY
2	4	5			16.3						SM	SANDSTONE, SILTY
2	7	10			20.1						SM	SANDSTONE, SILTY
2	8	2-3			24.1						SM	SANDSTONE, SILTY
2	10	10			11.9						SM-SW	SANDSTONE, SLIGHTLY SILTY
3	3	20	16.0	114.6	57.9	38	12	0.00		2.8	ML	SILTSTONE, SANDY
3	6	20	14.7	118.7	83.7					1.8	CL	CLAYSTONE, SANDY

TEST BORING NO. 1
DATE DRILLED 9/2/2021
Job # 212381

REMARKS	Depth (ft)	Symbol	Samples	Blows per foot	Watercontent %	Soil Type
DRY TO 20', 10/6/21						
SAND, SILTY, FINE TO COARSE GRAINED, BROWN, DENSE, MOIST				43	5.4	1
SANDSTONE, SILTY, FINE TO COARSE GRAINED, TAN, VERY DENSE, MOIST	5			50/9"	9.6	2
CLAYEY LENS	10			50/8"	10.0	2
	15			50/5"	7.9	2
	20			50/7"	8.4	2

TEST BORING NO. 2
DATE DRILLED 9/2/2021
CLIENT ELITE PROPERTIES
LOCATION POCO RD. AND VOLLMER RD.

REMARKS	Depth (ft)	Symbol	Samples	Blows per foot	Watercontent %	Soil Type
WATER @ 6', 10/6/21						
SAND, SILTY, FINE TO COARSE GRAINED, TAN, MEDIUM DENSE, DRY TO MOIST				13	2.0	1
	5			26	6.3	1
SANDSTONE, SILTY, FINE TO COARSE GRAINED, TAN, VERY DENSE, MOIST	10			50/8"	6.5	2
	15			50/10"	8.1	2
SANDSTONE, CLAYEY, FINE TO COARSE GRAINED, TAN, VERY DENSE, MOIST	20			50/4"	8.9	2

ENTECH
ENGINEERING, INC.
505 ELKTON DRIVE
COLORADO SPRINGS, COLORADO 80907

TEST BORING LOG

DRAWN:	DATE:	CHECKED:	DATE:

JOB NO.: 212381
FIG NO.: B- 1

TEST BORING NO. 3
DATE DRILLED 9/2/2021
Job # 212381

REMARKS	Depth (ft)	Symbol	Samples	Blows per foot	Watercontent %	Soil Type
WATER @ 14', 10/6/21						
SAND, SILTY, FINE TO COARSE GRAINED, BROWN, DENSE, MOIST				43	6.5	1
SANDSTONE, SILTY, FINE TO COARSE GRAINED, TAN, VERY DENSE, MOIST	5			50/8"	5.7	2
	10			50/7"	8.5	2
	15			50/8"	11.9	2
SILTSTONE, SANDY, BLUE GRAY, HARD, MOIST	20			50/8"	15.0	3

TEST BORING NO. 4
DATE DRILLED 9/2/2021
CLIENT ELITE PROPERTIES
LOCATION POCO RD. AND VOLLMER RD.

REMARKS	Depth (ft)	Symbol	Samples	Blows per foot	Watercontent %	Soil Type
WATER @ 7', 10/6/21						
SAND, SILTY, BROWN						1
SANDSTONE, SILTY, FINE TO COARSE GRAINED, TAN, VERY DENSE, MOIST				50/9"	5.6	2
	5			50/8"	9.6	2
	10			50/7"	12.1	2
	15			50/4"	7.3	2
	20			50/7"	10.6	2

ENTECH
ENGINEERING, INC.
505 ELKTON DRIVE
COLORADO SPRINGS, COLORADO 80907

TEST BORING LOG

DRAWN:	DATE:	CHECKED:	DATE:

JOB NO.: 212381
FIG NO.: B- 2

TEST BORING NO. 5
DATE DRILLED 9/2/2021
Job # 212381

REMARKS	Depth (ft)	Symbol	Samples	Blows per foot	Watercontent %	Soil Type
DRY TO 20', 10/6/21						
SAND, SILTY, FINE TO COARSE GRAINED, TAN, MEDIUM DENSE, DRY				13	2.5	1
	5			21	2.2	1
SANDSTONE, SILTY, FINE TO COARSE GRAINED, TAN, VERY DENSE, MOIST						
	10			50/9"	6.6	2
	15			50/6"	8.0	2
	20			50/7"	7.6	2

TEST BORING NO. 6
DATE DRILLED 9/2/2021
CLIENT ELITE PROPERTIES
LOCATION POCO RD. AND VOLLMER RD.

REMARKS	Depth (ft)	Symbol	Samples	Blows per foot	Watercontent %	Soil Type
WATER @ 11.5', 10/6/21						
SAND, SILTY, FINE TO COARSE GRAINED, BROWN, DENSE, MOIST				43	4.6	1
SANDSTONE, SILTY, FINE TO COARSE GRAINED, TAN, VERY DENSE, MOIST	5			50/9"	7.3	2
	10			50/10"	10.7	2
CLAYSTONE, SANDY, BLUE GRAY, HARD, MOIST	15			50/7"	14.6	3
	20			50/7"	14.4	3

ENTECH
ENGINEERING, INC.
505 ELKTON DRIVE
COLORADO SPRINGS, COLORADO 80907

TEST BORING LOG

DRAWN:	DATE:	CHECKED:	DATE:

JOB NO.: 212381
FIG NO.: B- 3

TEST BORING NO. 7
DATE DRILLED 9/2/2021
Job # 212381

REMARKS	Depth (ft)	Symbol	Samples	Blows per foot	Watercontent %	Soil Type
WATER @ 15.5', 10/6/21						
SAND, SILTY, BROWN						1
SANDSTONE, SILTY, FINE TO COARSE GRAINED, TAN, VERY DENSE, MOIST				50/8"	3.8	2
	5			50/9"	9.1	2
	10			50/8"	9.6	2
	15			50/8"	11.5	2
CLAYSTONE, SANDY, GRAY BROWN, HARD, MOIST	20			50/6"	13.7	3

TEST BORING NO. 8
DATE DRILLED 9/2/2021
CLIENT ELITE PROPERTIES
LOCATION POCO RD. AND VOLLMER RD.

REMARKS	Depth (ft)	Symbol	Samples	Blows per foot	Watercontent %	Soil Type
DRY TO 20', 10/6/21						
SAND, SILTY, BROWN						1
SANDSTONE, SILTY, FINE TO COARSE GRAINED, TAN, VERY DENSE, MOIST				50	11.1	2
	5			50/9"	8.5	2
	10			50/8"	10.1	2
	15			50/6"	9.3	2
	20			50/7"	11.9	2

ENTECH
ENGINEERING, INC.
505 ELKTON DRIVE
COLORADO SPRINGS, COLORADO 80907

TEST BORING LOG

DRAWN:	DATE:	CHECKED:	DATE:

JOB NO.: 212381
FIG NO.: B- 4

TEST BORING NO. 9
DATE DRILLED 9/2/2021
Job # 212381

REMARKS

WATER @ 14', 10/6/21

Depth (ft)	Symbol	Samples	Blows per foot	Watercontent %	Soil Type
	SAND, SILTY, FINE TO COARSE GRAINED, TAN, MEDIUM DENSE, MOIST		13	4.2	1
5			12	6.1	1
	SANDSTONE, SILTY, FINE TO COARSE GRAINED, TAN, VERY DENSE, MOIST				
10			50/8"	11.1	2
15			50/8"	9.5	2
20			50/6"	11.9	2

TEST BORING NO. 10
DATE DRILLED 9/2/2021
CLIENT ELITE PROPERTIES
LOCATION POCO RD. AND VOLLMER RD.

REMARKS

WATER @ 12', 10/6/21

Depth (ft)	Symbol	Samples	Blows per foot	Watercontent %	Soil Type
	SAND, SILTY, FINE TO COARSE GRAINED, TAN, MEDIUM DENSE, MOIST		18	3.5	1
	SANDSTONE, SLIGHTLY SILTY, FINE TO COARSE GRAINED, TAN, VERY DENSE, MOIST				
5			50/8"	8.5	2
10			50/8"	10.1	2
15			50/6"	12.0	2
20			50/8"	14.9	2

ENTECH
ENGINEERING, INC.
505 ELKTON DRIVE
COLORADO SPRINGS, COLORADO 80907

TEST BORING LOG

DRAWN:	DATE:	CHECKED:	DATE:

JOB NO.: 212381
FIG NO.: B- 5

TEST BORING NO. 11
DATE DRILLED 9/2/2021
Job # 212381

REMARKS	Depth (ft)	Symbol	Samples	Blows per foot	Watercontent %	Soil Type
WATER @ 15', 10/6/21						
SAND, SLIGHTLY SILTY, FINE TO COARSE GRAINED, TAN, MEDIUM DENSE TO DENSE, DRY TO MOIST				10	1.6	1
	5			37	3.5	1
SANDSTONE, SILTY, FINE TO COARSE GRAINED, TAN, VERY DENSE, MOIST						
	10			50/5"	8.5	2
	15			50/6"	12.7	2
WEATHERED ZONE CLAYSTONE, SANDY, GRAY BROWN, VERY STIFF, MOIST	20			34	11.4	3

TEST BORING NO. 12
DATE DRILLED 9/2/2021
CLIENT ELITE PROPERTIES
LOCATION POCO RD. AND VOLLMER RD.

REMARKS	Depth (ft)	Symbol	Samples	Blows per foot	Watercontent %	Soil Type
DRY TO 20', 10/6/21						
SAND, SILTY, FINE TO COARSE GRAINED, BROWN, MEDIUM DENSE, MOIST				17	4.0	1
CLAYEY LENS	5			26	12.6	1
SANDSTONE, SILTY, FINE TO COARSE GRAINED, TAN, VERY DENSE, MOIST	10			50/9"	9.9	2
	15			50/7"	8.9	2
	20			50/6"	10.6	2

ENTECH
ENGINEERING, INC.
505 ELKTON DRIVE
COLORADO SPRINGS, COLORADO 80907

TEST BORING LOG

DRAWN:	DATE:	CHECKED:	DATE:

JOB NO.: 212381
FIG NO.: B- 6

APPENDIX C: Soil Survey Descriptions

El Paso County Area, Colorado

71—Pring coarse sandy loam, 3 to 8 percent slopes

Map Unit Setting

National map unit symbol: 369k
Elevation: 6,800 to 7,600 feet
Farmland classification: Not prime farmland

Map Unit Composition

Pring and similar soils: 85 percent
Estimates are based on observations, descriptions, and transects of the mapunit.

Description of Pring

Setting

Landform: Hills
Landform position (three-dimensional): Side slope
Down-slope shape: Linear
Across-slope shape: Linear
Parent material: Arkosic alluvium derived from sedimentary rock

Typical profile

A - 0 to 14 inches: coarse sandy loam
C - 14 to 60 inches: gravelly sandy loam

Properties and qualities

Slope: 3 to 8 percent
Depth to restrictive feature: More than 80 inches
Drainage class: Well drained
Runoff class: Low
Capacity of the most limiting layer to transmit water (Ksat): High (2.00 to 6.00 in/hr)
Depth to water table: More than 80 inches
Frequency of flooding: None
Frequency of ponding: None
Available water supply, 0 to 60 inches: Low (about 6.0 inches)

Interpretive groups

Land capability classification (irrigated): None specified
Land capability classification (nonirrigated): 3e
Hydrologic Soil Group: B
Ecological site: R048AY222CO - Loamy Park
Hydric soil rating: No

Minor Components

Pleasant

Percent of map unit:
Landform: Depressions
Hydric soil rating: Yes

Other soils

Percent of map unit:
Hydric soil rating: No

Data Source Information

Soil Survey Area: El Paso County Area, Colorado
Survey Area Data: Version 19, Aug 31, 2021