FINAL DRAINAGE REPORT FOR
FALCON ACRES
14655 DAVIS ROAD
PEYTON, COLORADO 80831

August, 2023

Prepared For:

Thousand Hills Land & Cattle Co, LLC
812 E Monument Street
Colorado Springs, Colorado 80903
(719) 238-4234
Contact: Richard Elliott

Prepared By:

TERRA NOVA ENGINEERING, INC.
721 S. 23rd Street
Colorado Springs, CO 80904
(719) 635-6422

Job No. 2142.00
PCD Filing No.: SF223

FINAL DRAINAGE REPORT FOR
FALCON ACRES
14655 DAVIS ROAD
PEYTON, COLORADO 80831

TABLE OF CONTENTS

APPENDICIES

DRAINAGE REPORT STATEMENT

Design Engineer's Statement

This attached drainage plan and report were prepared under my direction and supervision and are correct to the best of my knowledge and belief. Said drainage report has been prepared according to the criteria established by the County for drainage reports and said report is in conformity with the master plan of the drainage basin. I accept responsibility for any liability caused by any negligent acts, errors or omissions on my part in preparing this report.

COLORADO LICENSED
L DUCETT
32339
PROFESSIONAL ENGINEER
8/17/2023

L DUCETT, P.E. 32339 Seal

OWNER/DEVELOPER'S STATEMENT:

I, the owner/developer have read and will comply with all of the requirements specified in this drainage report and plan.

8-18-2023

Authorized Signature Date

RICHARD ELLIOTT

Printed Name, Title

THOUSAND HILL LAND & CATTLE CO, LLC

Business Name

812 E MONUMENT STREET, COLORADO SPRINGS, CO 80903

Address

El Paso County Approval:

Filed in accordance with the requirements of the Drainage Criteria Manual, Volumes 1 & 2, El Paso County Engineering Criteria Manual and Land Development Code as amended.

Joshua Palmer, P.E. Date

County Engineer / ECM Administrator

Conditions:

Purpose

The purpose of this Final Drainage Report is to identify and analyze the existing and proposed drainage patterns, determine proposed runoff quantities, size drainage structures to safely convey the developed runoff, and present solutions to drainage impacts on-site and off-site resulting from this development.

General Description

This Final Drainage Report is an analysis of the development of "FALCON ACRES" (AKA "NE4NE4, E2E2NW4NE4 Sec 4-14-64") owned by Thousand Hills Land & Cattle Co., LLC. The site is located at 14655 Davis Road, Peyton, CO 80831 in Section 4, Township 14S, Range 64 West of the 6th Principal Meridian in El Paso County. The site is surrounded on all sides, except the north, by rural residential lots zoned RR-5. The lot to the north is zoned A-35. Davis Road borders the north boundary of the parcel and Curtis Road borders the east boundary. The site is currently unplatted.

The site is currently zoned RR-5 and does not currently have any significant structures as they were burned down in a fire since the initial approval of this final plat. There are two wells on this site which are intended to be reused.

Proposed is the subdivision of this unplatted lot into eight rural residential lots. A new public road (Peaceful Rain Way) extending south from Davis Road will provide access to the subdivision. Proposed gravel driveways will connect all lots to the new public road. Development of the subdivided lots is not included in this report. Grading associated with the proposed public road, driveways, and proposed drainage will be the only grading included in this report. Some grading can be expected when the individual lots are later developed.

The site lies within the upstream end of the Livestock Company Drainage Basin, which is tributary to the West Fork of Black Squirrel Creek.

Soils Condition

The soil for this project is composed of Type 97 "Truckton Loamy Sand" per the "Soils Survey of El Paso County Area, which is in Hydrologic Soil Group B with moderately rapid permeability, slow to medium surface runoff characteristics, moderate hazard of erosion, and 3 to 9 percent slopes.

Drainage Criteria

Hydrologic and Hydraulic calculations were performed using the El Paso County Storm Drainage Design Criteria Manual Volumes 1 & 2, latest editions. The Rational Method and the Soil Conservation Service Hydrograph Method were used to estimate storm water runoff.

Existing (Historic) Drainage Conditions

This site was previously studied in a report titled "Final Drainage Report for Falcon Acres Subdivision" dated June 25, 2007 by JPS Engineering. A drainage map for the existing conditions is included in the Appendix of this report. The site lies within the Livestock Company Drainage Basin. The existing topography is gently rolling with average grades ranging from 1 to 5 percent. The site is a rural ranch parcel and pasture/meadow area.

The existing drainage basins lying in and around the proposed development are depicted in the Appendix. The site is impacted by off-site drainage basins to the west, northwest, and southwest, which generally drain in an easterly direction across the site. Two existing sub-basins have been delineated within the site, each characterized by an existing depression as indicated by the hatched areas on the drainage maps. Overflows from the existing depressions within the site would tend to drain northeasterly towards the intersection of Davis Road and Curtis Road, where no culvert currently exists. The natural drainage patterns within the site will be impacted through development by site grading and concentration of runoff in subdivision streets. Developed runoff will generally continue to follow historic paths.

Basin OA1 contributes to DP OA1 and has an area of 207.64 acres consisting of mostly undeveloped land with localized depressions north of Davis Road. Runoff calculations for this basin were performed using the Soil Conservation Service Hydrograph Method due to the size of the basin. The basin was calculated to generate runoff amounts of Q10= 0.9 cfs and Q100= 21.6 cfs.

Basin OA2.1 contributes to DP OA2.1 and has an area of 469.43 acres consisting of mostly undeveloped land with localized depressions to the west of site. Runoff calculations for this basin were performed using the Soil Conservation Service Hydrograph Method due to the size of the basin. The basin was calculated to generate runoff amounts of Q10= 1.6 cfs and Q100= 39.3 cfs.

Basin OA2.2 contributes to DP OA2.2 and has an area of 14.49 acres consisting of undeveloped land draining onto the southwest corner of the site. Runoff calculations for this basin were performed using the Rational Method due to the small size of this offsite basin. The basin was calculated to generate runoff amounts of Q5= 2.5 cfs and Q100= 15.8 cfs.

Basin OA3 contributes to DP OA3 and has an area of 24.42 acres consisting of undeveloped land draining onto the southern area of Falcon Acres. Runoff calculations for this basin were performed using the Rational Method due to the smaller size of this offsite basin. The basin was calculated to generate runoff amounts of Q5= 4.2 cfs and Q100= 26.9 cfs.

Basin OB1 contributes to DP OB1 and has an area of 1.00 acres consisting of undeveloped land draining onto the southeast corner of the parcel. Runoff calculations for this basin were performed using the Rational Method due to the small size of this offsite basin. The basin was calculated to generate runoff amounts of Q5= 0.3 cfs and Q100= 1.9 cfs.

Basin A contributes to DP A and makes up a majority of the existing site. It has an area of 33.80 acres consisting of mostly undeveloped land on the eastern side of the parcel. There are a few remnants of structures that were destroyed in a fire several years ago. This entire basin drains to an existing depression near the center of the basin. Runoff calculations for this basin were performed using the Rational Method due to the smaller size of this basin. The basin was calculated to generate runoff amounts of Q5= 7.3 cfs and Q100= 47.9 cfs.

Basin B contributes to DP B and has an area of 15.48 acres consisting of mostly undeveloped similar to the land on the eastern side of the parcel. This basin drains to an existing depression near the center of the basin. Runoff calculations for this basin were performed using the Rational Method due to the smaller size of this basin. The basin was calculated to generate runoff amounts of Q5= 2.9 cfs and Q100= 18.8 cfs.

Off-site flows from Basins OA1-OA3 combine with on-site drainage from Basin A, draining to the existing depression within Basin A on the west side of the parcel. The existing upstream basins have several stock ponds and retention areas. There is currently no culvert for drainage to cross the low point in Davis Road at the north boundary of the site. Based on the topography, overflows from Basin OA1 would overtop Davis Road and flow south into Basin A. Off-site flows from Basins OA1, OA2.1, OA2.2, and OA3 combine with on-site flows at the existing retention area within Basin A, with calculated historic peak flows of Q5=16.5 cfs and Q100=151.6 cfs at Design Point A. The westerly retention area (Retention Area A) within the Falcon Acres site currently has a storage volume of approximately 91.6 acre-feet between the 6528 and 6536 contours. Overflows from this retention area would drain northeasterly to Basin B.

Off-site flows from Basin OB1 combine with on-site drainage from Basin B, draining to the existing depression within Basin B on the east side of the parcel. Off-site flows from Basin OB1 combine with on-site flows at the existing retention area within Basin B, with calculated historic peak flows of Q5=3.2 cfs and Q100=20.7 cfs at Design Point B. The easterly retention area (Retention Area B) has a storage volume of approximately 6.9 acre-feet between the 6528 and 6530 contours. Overflows from Retention Area B would drain northeasterly towards the intersection of Curtis Road and Davis Road.

Based on the substantial retention volume within the site, no 100-year flows would be expected to reach Design Point 1 at the northeast corner of the site. In the unlikely event the existing retention ponds were completely full, overflows from Basin A would flow northeasterly, combining with flows from Basin B at Design Point 1, with calculated historic peak flows of Q5=19.7 cfs and Q100=172.3 cfs. The calculated flows for off-site basins have incorporated an SCS runoff curve number of 50 based on the existence of numerous upstream retention areas which is consistent with the approved Final Drainage Report for Davis Ranch Subdivision, which is located a few miles east of this site. Historic overflows from the Falcon Acres site would tend to overtop Curtis Road and flow to an existing depression on the parcel at the southeast corner of Curtis Road and Davis Road.

Developed Drainage Conditions

A drainage map for the proposed condition is included in the appendix of this report. The offsite basins remain the same.

In the developed conditions, Basin A has been divided into Sub-basins A1 & A2 by the proposed public road within the site. Off-site flows from Basin OA2.1 and OA2.2 will combine with on-site drainage from Sub-basins A1 & A2, draining to a new culvert crossing at the low point of the proposed roadway profile. Developed peak flow at Design Point A1 are projected to be Q5=7.7 cfs and Q100=74.6 cfs. Two Proposed 36” RCP culverts will cross the public road at Design Point A1.

Basin A1 contributes to DP A1 and has an area of 6.10 acres consisting mostly of proposed residential development and a small amount of gravel road in the northwestern corner of the site. This basin drains to the proposed 36” dual culverts that will cross beneath Peaceful Rain Way. Runoff calculations for this basin were performed using the Rational Method. The basin was calculated to generate runoff amounts of Q5= 1.7 cfs and Q100= 9.1 cfs.

Basin A2 contributes to DP A2 and has an area of 6.24 acres consisting mostly of proposed residential development and a small amount of gravel road similar to Basin A1 in the southwestern corner of the site. This basin drains to DP A2 which will be the location of future 24” dual culverts that will cross beneath the future road Moonglow Heights to the west of Peaceful Rain Way. Runoff calculations for this basin were performed using the Rational Method. The basin was calculated to generate runoff amounts of Q5= 1.9 cfs and Q100= 10.4 cfs.

Given the lack of any existing drainage facility crossing the low point in Davis Road, a future 24-inch culvert is recommended at Design Point OA1. A 24” private driveway culvert will be installed across the private shared driveway (Satellite View) south of Design Point OA1. Dual 24” private driveway culverts will be constructed across Moonglow Heights as Design Point A3.1 to convey drainage across the retention area split by the new shared driveway. Possible driveway locations and grading have been provided for Lots 4, 7, & 8 extending to the edge of Retention Area A. The driveway for Lot 4 would require an 18” culvert as shown in the appendix.

Basin A3.1 contributes to DP A3.1 and has an area of 9.13 acres consisting mostly of proposed residential development and a small amount of gravel road in the southcentral area of the site. This basin drains to the proposed 24” dual culverts that will cross beneath Moonglow Heights east of Peaceful Rain Way. Runoff calculations for this basin were performed using the Rational Method. The basin was calculated to generate runoff amounts of Q5= 2.0 cfs and Q100= 10.6 cfs.

Basin A3.2 contributes to DP A and has an area of 12.34 acres consisting of proposed residential development, a small amount of gravel road, and contains most of Retention Area A. It is located in the northcentral area of the site. This basin drains to Retention Area A in the center of the site. Runoff calculations for this basin were performed using the Rational Method. The basin was calculated to generate runoff amounts of Q5= 3.5 cfs and Q100= 19.2 cfs.

Off-site flows from Basins OA1-OA3 will continue to combine with flows from Basins A1-A3 in the existing “Retention Area A” on the west side of the site. Off-site flows from Basins OA1, OA2.1, OA2.2, and OA3 will combine with on-site flows from Basins A1-A3.2 at the existing retention area within Basin A, with calculated developed peak flows of Q5=18.3 cfs and Q100=153.0 cfs.

The retention area has a bottom elevation of 6528.0 and the existing saddle northeast of this area has an elevation of approximately 6536.0 which would be the natural overflow point from this area. Channel A3 is proposed to provide an overflow swale northeasterly from Retention Area A to Retention Area B. This channel will be excavated to an elevation of 6533.5, and a drainage easement will encompass ground elevations within Retention Area A up to the grade of 6534.0 to preclude building anywhere within the retention area. Rollmax TMax3K High-performance Turf Reinforcement Mat or a similar product should be installed in the channel. See specifications in the appendix.

The Mile High Flood District has adopted criteria recommending stormwater retention ponds to have a storage volume of 2 times the 24-hour 100-year volume. As detailed in the appendix, the calculated 100-year, 24-hour retention volume for Design Point A is 11.73 acre-feet. The available retention storage volume up to the 6532.0 contour level within Basin A is 25.28 acre-feet, which is approximately equal to the calculated 100-year storage volume recommendation of 2 times 11.73 acre-feet (based on a 24-hour retention volume with safety factor of 2.0 per Mile High Flood District recommendations. This calculation takes into account the area of the roads and driveways that are to be built in Retention Area A. Overflow channels will be provided to safely convey overflows or to existing downstream swales. The approximate tributary area of impervious surfaces for Retention Area A is 0.6 acres so a forebay is not required.

Basin B contributes to DP B and has an area of 15.48 acres consisting of proposed residential development and contains all of Retention Area B. It is located on the eastern portion of the site. This basin drains to Retention Area B in the center of the basin. Runoff calculations for this basin were performed using the Rational Method. The basin was calculated to generate runoff amounts of Q5= 5.2 cfs and Q100= 26.6 cfs.

Off-site flows from Basin OB1 will continue to combine with on-site drainage from Basin B, draining to the existing “Retention Area B” on the east side of the site. Off-site flows from Basin OB1 will continue to combine with on-site flows at the existing retention area near the center of Basin B, with calculated developed peak flows of Q5=5.5 cfs and Q100=28.5 cfs at Design Point B.

Retention Area B has a bottom elevation of 6527.0 and the existing overflow swale to the northeast has an elevation of approximately 6530.0. A drainage easement will encompass ground elevations within Area B up to the grade of 6530 to preclude building within the retention area. Rollmax TMax3K High-performance Turf Reinforcement Mat or a similar product should be installed in the channel. See specifications in the appendix.

As detailed in the appendix, the calculated 100-year 24-hour retention volume for Design Point B is 0.31 acre-feet, which is below the available retention storage volume of 1.80 acre-feet at the 6528.0 contour.

As is the historic conditions, no 100-year flows would be expected to reach Design Point 1 based on the substantial retention volume within the site. In the unlikely event the existing retention ponds were completely full, overflows from off-site Basins OA1-OA3 & OB1 will combine with flows from on-site Basins A and B at Design Point 1, with developed peak flows of Q5=23.8 cfs and Q100=181.5 cfs.

The proposed rural residential lot layout das been designed to maintain the two existing drainage retention areas, while providing an overflow channel to the northeast. Given the lack of any existing drainage facility crossing the low point on the south side of Davis Road and Curtis Road intersection, a culvert is recommended at this location. The proposed culvert is a 14” by 23” elliptical culvert sized to convey overflows only from the on-site retention areas (beyond 100-year flows).

The off-site parcel to the east also has an existing depression which serves as a drainage retention area. The proposed drainage approach of maintaining the existing drainage retention areas within the Falcon Acres parcel should maintain conditions that mimic pre-development hydrology downstream of the site.

Comparison of Developed to Historic Discharges

Based on the hydrologic calculations in the appendix, the total developed flow from the site will remain unchanged based on the existing retention volumes. If the existing retention volume were excluded from the analysis, the total developed flow would exceed historic flow from the site by approximately 14%. The increase in developed flow will be mitigated by maintaining the existing on-site drainage retention areas.

The total developed storm runoff downstream of the proposed subdivision will be maintained at historic levels by routing flows through two existing retention ponds within the site. The retention volume has been sized to retain the calculated 24-hour, 100-year storm discharge from the developed basins within the site, as detailed in the appendix. Overflow swales will be provided to convey major storm discharges downstream following historic drainage patterns. Based on the drainage concept of protecting the existing on-site retention areas, the proposed development will have a negligible downstream drainage impact.

FSEDB

In an effort to protect receiving water and as part of the "four step process to minimize adverse impacts of urbanization" this site was analyzed in the following manner:

Step 1: Employ Runoff Reduction Practices – All drainage from the proposed development will be routed to existing retention areas. By capturing these flows in the retention areas, the developed runoff will be retained and reduce the quantity of downstream runoff. Existing native prairie grasses in the retention areas are being retained that will act as natural grass buffers.

Step 2: Stabilize Drainageways – There are no existing streams associated with this site, but the reduction of runoff from the site will help to stabilize downstream waterways. All drainageways proposed onsite are grass swales.

Step 3: Provide Water Quality Capture Volume – The retention areas will be retained to capture and treat the runoff from the proposed development in the appropriate manner.

Step 4: Consider Need for Industrial and Commercial BMPs – As this development will not include outdoor storage or the potential for the introduction of contaminants to the County's MS4, since it is not an industrial or commercial site, no source controls are proposed or necessary.

Floodplain Statement

According to FEMA's FIRM No. 08041CO785G (eff. 12/7/2018), the proposed development is within an area designated as Zone X, having minimal flood hazard.

Construction Cost Opinion

Private Drainage Facilities Improvements (Non-Reimbursable)

Description	Quantity	Unit Price	Cost
18" RCP Culvert	84 LF	$70	$5,880

24” RCP Culvert	116 LF	$83	$9,628
		Total	**$15,508**

Public Drainage Facilities Improvements

Description	Quantity	Unit Price	Cost
14”X23” RCP Culvert	68 LF	$70	$4,760
24” RCP Culvert	100 LF	$83	$8,300
36” RCP Culvert	132 LF	$128	$16,896
14”X23” FES	2 EA	$138	$276
36” FES	2 EA	$216	$432
		Subtotal	*$30,664*
		10% Contingency	*$3,066.40*
		Total	**$33,730.40**

Drainage And Bridge Fees

This currently unplatted site is in the Livestock Company Drainage Basin. The site is 49.23 acres. Appendix L of the Drainage Criteria Manual 1 Addendum states that for single-family 5-acre lots, an impervious percentage of 7% can be used. The combined Drainage Fees (2022) are due prior to final plat recordation.

Fee Type	% Imp.	Parcel Area (acre)	Imp. Area (acre)	Fee per Imp Acre	Mod %	Fee Cost
Drainage	7	49.23	3.45	$19,552	75*	$50,590.80
Bridge	7	49.23	3.45	$233	100	$803.85
				Total		$51,394.65

*25% reduction for low density lots per ECM Appendix L Section 3.10.2a

Maintenance

The existing retention areas will be privately maintained by the lot owners and is accessible via private and public drives throughout the site. The retention areas should be inspected at least twice per year and debris removed as necessary. The proposed erosion control measures will be repaired and maintained by the property owners as required. The proposed private culverts will be privately maintained by the lot owners.

On-Site Drainage Facility Design

Developed sub-basins and proposed drainage improvements are depicted in the enclosed Drainage Plan (Sheet D1). In accordance with El Paso County standards, new roadways will be graded with a minimum longitudinal slope of one percent. On site-drainage facilities will consist of roadside ditches, grass-lined channels, and culverts. Hydraulic calculations for sizing of drainage facilities are enclosed in the appendix and design criteria is summarized as follows:

Culverts

The internal road system will be graded to drain roadside ditches to low points along the road profile, where culverts will convey developed flows into grass-lined channels following historic drainage paths. The culverts have been specified as reinforced concrete

pipe (RCP) with a minimum diameter of 18-inches. Culvert sizes are based on El Paso County criteria. Riprap outlet protection will be provided at all culverts. Calculations are provided in the appendix.

Open Channels

Drainage easements have been dedicated along major drainage channels and existing depressions within the site, following historic drainage paths through the subdivision. Proposed channels will be grass-lined channels designed to convey 100-year flows, with a trapezoidal cross-section, variable bottom width and depth, 4:1 maximum side slopes, 1-foot minimum freeboard, and a minimum 0.5 percent slope.

The proposed drainage channels have been sized using Manning's equation for open channel flow, assuming a friction factor of 0.030 for dry-land grass channels. Maximum allowable velocities have been evaluated based on El Paso County drainage criteria, typically allowing for a maximum 100-year velocity of 5 feet per second. The proposed channels will be seeded with native grasses for erosion control. Ditch flows will be diverted to drainage channels at the nearest practical location to minimize excessive roadside ditch sizes. Detailed channel hydraulic calculations are provided in the appendix.

Drainage swales crossing proposed lots and existing drainage retention areas within the site have been placed in drainage easements, with variable widths based on the 100-year water surface elevations and retention area configuration. Based on the proposed channel sections shown on the proposed drainage map, a drainage easement width of 35' will be required for the overflow swales from each of the retention ponds.

Anticipated Drainage Problems and Solutions

The drainage plan for this subdivision includes a system of roadside ditches, channels, and culverts to convey developed flows through the site. The primary drainage problems anticipated within this development will consist of maintenance of these drainage channels and culverts. Care will need to be taken to implement proper erosion control measures in the proposed roadside ditches, channels, and swales. Ditches have been designed to meet allowable velocity criteria. Seeding will be the primary erosion control method within the on-site ditches and channels. Erosion control blankets have been specified where necessary. Proposed drainage facilities outside the public right-of-way will be owned and maintained by the subdivision HOA or individual lot owners.

Erosion & Sediment Control

Best management practices (BMP's) will be implemented for erosion control during construction. Erosion control measures will include installation of silt fence at the toe of disturbed slopes, straw bales protecting drainage ditches, vehicle tracking control pads at access points, and revegetation of disturbed areas. Cut slopes will be stabilized during excavation as necessary and vegetation will be re-established as soon as possible for stabilization of the graded areas. The two drainage retention areas will serve as permanent water quality BMP's, minimizing adverse drainage impacts to downstream areas.

Water Rights

This project intends to place a drainage easement on top of an existing retention area that will continue to function as it has historically and no work will be performed to deepen or expand that area. Therefore, the State Engineer's Office has determined that no Commission/DWR water rights authorization is required for this project. Any drainage easement on top of an existing natural retention area to allow flow-through will also not require a water right from the Commission.

Summary

This Final Drainage Report analyzed the development of Falcon Acres owned by Thousand Hills Land & Cattle Co, LLC located at 14655 Davis Road, Peyton, CO 80831. Runoff from the development will not adversely affect the surrounding or downstream developments as the small increase will be mitigated by maintaining two existing drainage retention areas within the site. Proposed flows, as detailed in this report, will follow existing drainage patterns and will be safely routed to those existing retention areas where water quality is also provided on-site. Maintenance of the retention areas, in conjunction with proper erosion control measures, will ensure that there will be no adverse drainage impacts from this development to downstream landowners or parcels. An Erosion Control Plan will be submitted separately.

References

1) *City of Colorado Springs/County of El Paso Drainage Criteria Manual, dated May 2014.*
2) *Soil survey of El Paso County Area, Colorado, Prepared by United States Department of Agriculture Soil Conservation Service*, dated June 1981.
3) *Federal Emergency Management Agency (FEMA) Flood Insurance Rate Map Number 08041CO785G.*
4) *Mile High Flood District DCM*

APPENDICES

VICINITY MAP

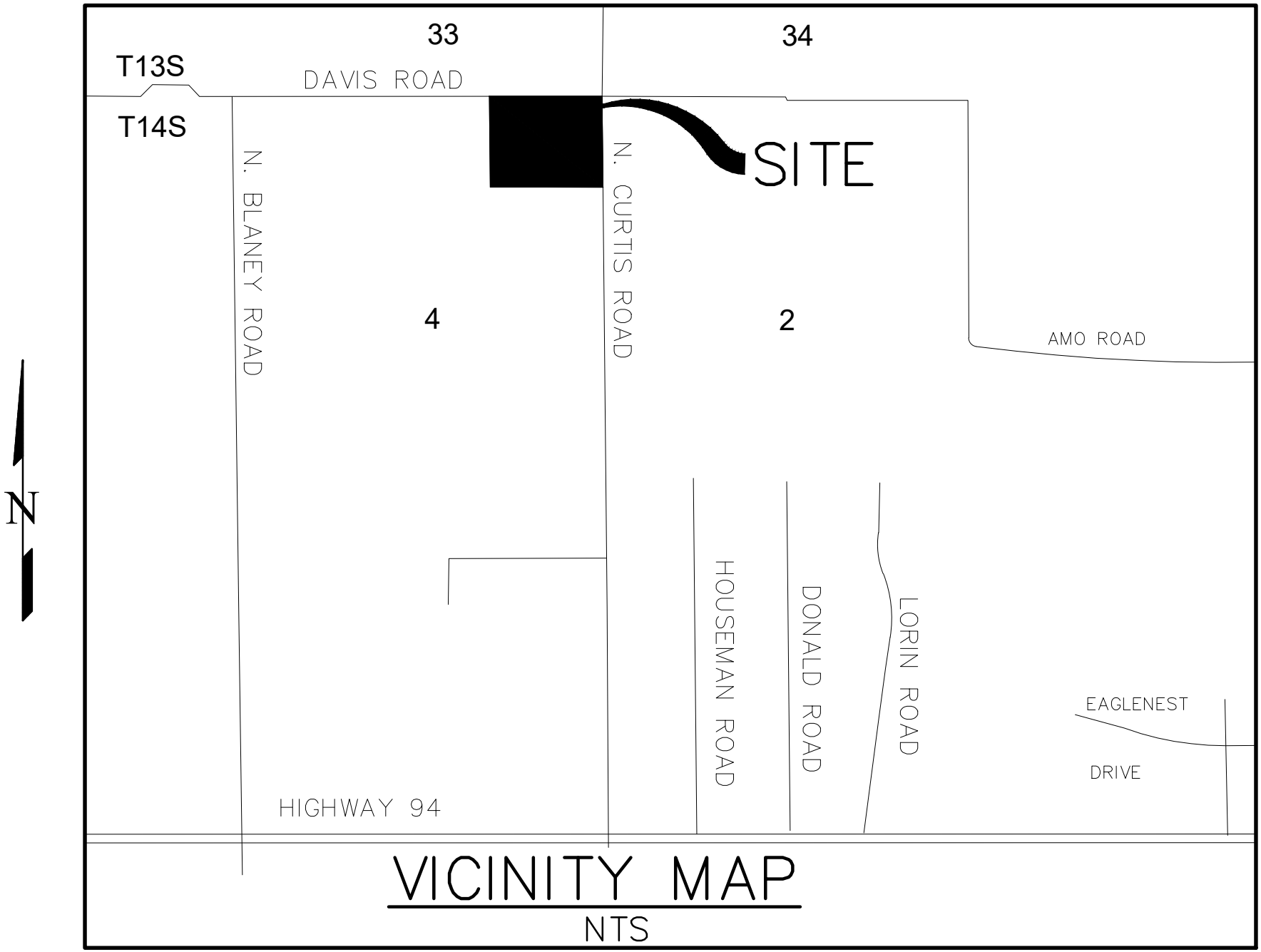

VICINITY MAP

NTS

SOILS MAP

Map Scale: 1:16,500 if printed on A landscape (11" x 8.5") sheet.

N

Meters: 0 200 400 800 1200

Feet: 0 500 1000 2000 3000

Map projection: Web Mercator Corner coordinates: WGS84 Edge tics: UTM Zone 13N WGS84

MAP LEGEND

Area of Interest (AOI)

Area of Interest (AOI)

Soils

Soil Map Unit Polygons

Soil Map Unit Lines

Soil Map Unit Points

Special Point Features

Blowout

Borrow Pit

Clay Spot

Closed Depression

Gravel Pit

Gravelly Spot

Landfill

Lava Flow

Marsh or swamp

Mine or Quarry

Miscellaneous Water

Perennial Water

Rock Outcrop

Saline Spot

Sandy Spot

Severely Eroded Spot

Sinkhole

Slide or Slip

Sodic Spot

Spoil Area

Stony Spot

Very Stony Spot

Wet Spot

Other

Special Line Features

Water Features

Streams and Canals

Transportation

Rails

Interstate Highways

US Routes

Major Roads

Local Roads

Background

Topographic Map

Aerial Photography

MAP INFORMATION

The soil surveys that comprise your AOI were mapped at 1:24,000.

Please rely on the bar scale on each map sheet for map measurements.

Source of Map: Natural Resources Conservation Service
Web Soil Survey URL:
Coordinate System: Web Mercator (EPSG:3857)

Maps from the Web Soil Survey are based on the Web Mercator projection, which preserves direction and shape but distorts distance and area. A projection that preserves area, such as the Albers equal-area conic projection, should be used if more accurate calculations of distance or area are required.

This product is generated from the USDA-NRCS certified data as of the version date(s) listed below.

Soil Survey Area: El Paso County Area, Colorado
Survey Area Data: Version 19, Aug 31, 2021

Soil map units are labeled (as space allows) for map scales 1:50,000 or larger.

Date(s) aerial images were photographed: Sep 11, 2018—Oct 20, 2018

The orthophoto or other base map on which the soil lines were compiled and digitized probably differs from the background imagery displayed on these maps. As a result, some minor shifting of map unit boundaries may be evident.

Map Unit Legend

Map Unit Symbol	Map Unit Name	Acres in AOI	Percent of AOI
3	Ascalon sandy loam, 3 to 9 percent slopes	90.2	11.8%
8	Blakeland loamy sand, 1 to 9 percent slopes	214.3	28.0%
13	Bresser sandy loam, cool, 5 to 9 percent slopes	19.1	2.5%
86	Stoneham sandy loam, 3 to 8 percent slopes	249.6	32.6%
97	Truckton sandy loam, 3 to 9 percent slopes	174.3	22.8%
101	Ustic Torrifluvents, loamy	14.1	1.8%
105	Vona sandy loam, warm, 3 to 6 percent slopes	4.5	0.6%
Totals for Area of Interest		**766.3**	**100.0%**

El Paso County Area, Colorado

3—Ascalon sandy loam, 3 to 9 percent slopes

Map Unit Setting

National map unit symbol: 2tlny
Elevation: 3,870 to 5,960 feet
Mean annual precipitation: 13 to 18 inches
Mean annual air temperature: 46 to 54 degrees F
Frost-free period: 95 to 155 days
Farmland classification: Not prime farmland

Map Unit Composition

Ascalon and similar soils: 85 percent
Minor components: 15 percent
Estimates are based on observations, descriptions, and transects of the mapunit.

Description of Ascalon

Setting

Landform: Interfluves
Landform position (two-dimensional): Backslope
Landform position (three-dimensional): Side slope
Down-slope shape: Linear
Across-slope shape: Linear
Parent material: Wind-reworked alluvium and/or calcareous sandy eolian deposits

Typical profile

Ap - 0 to 6 inches: sandy loam
Bt1 - 6 to 12 inches: sandy clay loam
Bt2 - 12 to 19 inches: sandy clay loam
Bk1 - 19 to 35 inches: fine sandy loam
Bk2 - 35 to 80 inches: fine sandy loam

Properties and qualities

Slope: 3 to 9 percent
Depth to restrictive feature: More than 80 inches
Drainage class: Well drained
Runoff class: Medium
Capacity of the most limiting layer to transmit water (Ksat): Moderately high to high (0.60 to 5.98 in/hr)
Depth to water table: More than 80 inches
Frequency of flooding: None
Frequency of ponding: None
Calcium carbonate, maximum content: 10 percent
Maximum salinity: Nonsaline (0.1 to 1.9 mmhos/cm)
Sodium adsorption ratio, maximum: 1.0
Available water supply, 0 to 60 inches: Moderate (about 7.1 inches)

Interpretive groups

Land capability classification (irrigated): 6e
Land capability classification (nonirrigated): 6e
Hydrologic Soil Group: B
Ecological site: R067BY024CO - Sandy Plains
Hydric soil rating: No

Minor Components

Olnest

Percent of map unit: 10 percent
Landform: Interfluves
Landform position (two-dimensional): Backslope
Landform position (three-dimensional): Side slope
Down-slope shape: Linear
Across-slope shape: Linear
Ecological site: R067BY024CO - Sandy Plains
Hydric soil rating: No

Vona

Percent of map unit: 5 percent
Landform: Interfluves
Landform position (two-dimensional): Backslope
Landform position (three-dimensional): Side slope
Down-slope shape: Linear
Across-slope shape: Linear
Ecological site: R067BY024CO - Sandy Plains
Hydric soil rating: No

Data Source Information

Soil Survey Area: El Paso County Area, Colorado
Survey Area Data: Version 19, Aug 31, 2021

El Paso County Area, Colorado

8—Blakeland loamy sand, 1 to 9 percent slopes

Map Unit Setting

National map unit symbol: 369v
Elevation: 4,600 to 5,800 feet
Mean annual precipitation: 14 to 16 inches
Mean annual air temperature: 46 to 48 degrees F
Frost-free period: 125 to 145 days
Farmland classification: Not prime farmland

Map Unit Composition

Blakeland and similar soils: 98 percent
Minor components: 2 percent
Estimates are based on observations, descriptions, and transects of the mapunit.

Description of Blakeland

Setting

Landform: Hills, flats
Landform position (three-dimensional): Side slope, talf
Down-slope shape: Linear
Across-slope shape: Linear
Parent material: Alluvium derived from sedimentary rock and/or eolian deposits derived from sedimentary rock

Typical profile

A - 0 to 11 inches: loamy sand
AC - 11 to 27 inches: loamy sand
C - 27 to 60 inches: sand

Properties and qualities

Slope: 1 to 9 percent
Depth to restrictive feature: More than 80 inches
Drainage class: Somewhat excessively drained
Runoff class: Low
Capacity of the most limiting layer to transmit water (Ksat): High to very high (5.95 to 19.98 in/hr)
Depth to water table: More than 80 inches
Frequency of flooding: None
Frequency of ponding: None
Calcium carbonate, maximum content: 5 percent
Available water supply, 0 to 60 inches: Low (about 4.5 inches)

Interpretive groups

Land capability classification (irrigated): 3e
Land capability classification (nonirrigated): 6e
Hydrologic Soil Group: A
Ecological site: R049XB210CO - Sandy Foothill
Hydric soil rating: No

Minor Components

Other soils

Percent of map unit: 1 percent
Hydric soil rating: No

Pleasant

Percent of map unit: 1 percent
Landform: Depressions
Hydric soil rating: Yes

Data Source Information

Soil Survey Area: El Paso County Area, Colorado
Survey Area Data: Version 19, Aug 31, 2021

El Paso County Area, Colorado

13—Bresser sandy loam, cool, 5 to 9 percent slopes

Map Unit Setting

National map unit symbol: 2tlpk
Elevation: 5,500 to 6,960 feet
Mean annual precipitation: 15 to 19 inches
Mean annual air temperature: 48 to 52 degrees F
Frost-free period: 100 to 130 days
Farmland classification: Not prime farmland

Map Unit Composition

Bresser, cool, and similar soils: 85 percent
Minor components: 15 percent
Estimates are based on observations, descriptions, and transects of the mapunit.

Description of Bresser, Cool

Setting

Landform: Interfluves
Landform position (two-dimensional): Shoulder, backslope
Landform position (three-dimensional): Interfluve
Down-slope shape: Linear
Across-slope shape: Linear
Parent material: Tertiary aged alluvium derived from arkose

Typical profile

Ap - 0 to 5 inches: sandy loam
Bt1 - 5 to 8 inches: sandy loam
Bt2 - 8 to 27 inches: sandy clay loam
Bt3 - 27 to 36 inches: sandy loam
C - 36 to 80 inches: loamy coarse sand

Properties and qualities

Slope: 5 to 9 percent
Depth to restrictive feature: More than 80 inches
Drainage class: Well drained
Runoff class: Medium
Capacity of the most limiting layer to transmit water (Ksat): Moderately high to high (0.60 to 6.00 in/hr)
Depth to water table: More than 80 inches
Frequency of flooding: None
Frequency of ponding: None
Calcium carbonate, maximum content: 5 percent
Maximum salinity: Nonsaline to very slightly saline (0.1 to 2.0 mmhos/cm)
Available water supply, 0 to 60 inches: Low (about 5.4 inches)

Interpretive groups

Land capability classification (irrigated): 4e

Land capability classification (nonirrigated): 4e
Hydrologic Soil Group: B
Ecological site: R049XB210CO - Sandy Foothill
Hydric soil rating: No

Minor Components

Ascalon
Percent of map unit: 10 percent
Landform: Interfluves
Landform position (two-dimensional): Shoulder
Landform position (three-dimensional): Interfluve
Down-slope shape: Linear
Across-slope shape: Linear
Ecological site: R049XB210CO - Sandy Foothill
Hydric soil rating: No

Truckton
Percent of map unit: 5 percent
Landform: Interfluves
Landform position (two-dimensional): Backslope
Landform position (three-dimensional): Interfluve
Down-slope shape: Linear
Across-slope shape: Linear
Ecological site: R049XB210CO - Sandy Foothill
Hydric soil rating: No

Data Source Information

Soil Survey Area: El Paso County Area, Colorado
Survey Area Data: Version 19, Aug 31, 2021

El Paso County Area, Colorado

86—Stoneham sandy loam, 3 to 8 percent slopes

Map Unit Setting

National map unit symbol: 36b2
Elevation: 5,100 to 6,500 feet
Mean annual precipitation: 13 to 15 inches
Mean annual air temperature: 48 to 52 degrees F
Frost-free period: 135 to 155 days
Farmland classification: Not prime farmland

Map Unit Composition

Stoneham and similar soils: 95 percent
Minor components: 5 percent
Estimates are based on observations, descriptions, and transects of the mapunit.

Description of Stoneham

Setting

Landform: Hills
Landform position (three-dimensional): Side slope
Down-slope shape: Linear
Across-slope shape: Linear
Parent material: Calcareous loamy alluvium

Typical profile

A - 0 to 4 inches: sandy loam
Bt - 4 to 8 inches: sandy clay loam
Btk - 8 to 11 inches: sandy clay loam
Ck - 11 to 60 inches: loam

Properties and qualities

Slope: 3 to 8 percent
Depth to restrictive feature: More than 80 inches
Drainage class: Well drained
Runoff class: Medium
Capacity of the most limiting layer to transmit water (Ksat): Moderately high to high (0.60 to 2.00 in/hr)
Depth to water table: More than 80 inches
Frequency of flooding: None
Frequency of ponding: None
Calcium carbonate, maximum content: 15 percent
Maximum salinity: Nonsaline to very slightly saline (0.0 to 2.0 mmhos/cm)
Available water supply, 0 to 60 inches: High (about 9.5 inches)

Interpretive groups

Land capability classification (irrigated): 3e
Land capability classification (nonirrigated): 4e
Hydrologic Soil Group: B

Ecological site: R067BY024CO - Sandy Plains
Other vegetative classification: SANDY PLAINS (069AY026CO)
Hydric soil rating: No

Minor Components

Other soils
Percent of map unit: 4 percent
Hydric soil rating: No

Pleasant
Percent of map unit: 1 percent
Landform: Depressions
Hydric soil rating: Yes

Data Source Information

Soil Survey Area: El Paso County Area, Colorado
Survey Area Data: Version 19, Aug 31, 2021

El Paso County Area, Colorado

97—Truckton sandy loam, 3 to 9 percent slopes

Map Unit Setting

National map unit symbol: 2x0j2
Elevation: 5,300 to 6,850 feet
Mean annual precipitation: 14 to 19 inches
Mean annual air temperature: 48 to 52 degrees F
Frost-free period: 85 to 155 days
Farmland classification: Not prime farmland

Map Unit Composition

Truckton and similar soils: 85 percent
Minor components: 15 percent
Estimates are based on observations, descriptions, and transects of the mapunit.

Description of Truckton

Setting

Landform: Interfluves, hillslopes
Landform position (two-dimensional): Backslope
Landform position (three-dimensional): Side slope
Down-slope shape: Linear
Across-slope shape: Linear
Parent material: Re-worked alluvium derived from arkose

Typical profile

A - 0 to 4 inches: sandy loam
Bt1 - 4 to 12 inches: sandy loam
Bt2 - 12 to 19 inches: sandy loam
C - 19 to 80 inches: sandy loam

Properties and qualities

Slope: 3 to 9 percent
Depth to restrictive feature: More than 80 inches
Drainage class: Well drained
Runoff class: Low
Capacity of the most limiting layer to transmit water (Ksat): High (2.00 to 6.00 in/hr)
Depth to water table: More than 80 inches
Frequency of flooding: None
Frequency of ponding: None
Calcium carbonate, maximum content: 1 percent
Maximum salinity: Nonsaline (0.1 to 1.9 mmhos/cm)
Available water supply, 0 to 60 inches: Moderate (about 6.6 inches)

Interpretive groups

Land capability classification (irrigated): 6e
Land capability classification (nonirrigated): 6e

Hydrologic Soil Group: A
Ecological site: R049XB210CO - Sandy Foothill
Hydric soil rating: No

Minor Components

Blakeland

Percent of map unit: 8 percent
Landform: Interfluves, hillslopes
Landform position (two-dimensional): Summit, shoulder, backslope
Landform position (three-dimensional): Side slope, crest
Down-slope shape: Convex, linear
Across-slope shape: Convex, linear
Ecological site: R049XB210CO - Sandy Foothill
Hydric soil rating: No

Bresser

Percent of map unit: 7 percent
Landform: Interfluves, low hills
Landform position (two-dimensional): Footslope, toeslope
Landform position (three-dimensional): Base slope
Down-slope shape: Concave, linear
Across-slope shape: Concave, linear
Ecological site: R049XB210CO - Sandy Foothill
Hydric soil rating: No

Data Source Information

Soil Survey Area: El Paso County Area, Colorado
Survey Area Data: Version 19, Aug 31, 2021

El Paso County Area, Colorado

101—Ustic Torrifluvents, loamy

Map Unit Setting

National map unit symbol: 3673
Elevation: 5,500 to 7,000 feet
Mean annual precipitation: 13 to 16 inches
Mean annual air temperature: 47 to 52 degrees F
Frost-free period: 125 to 155 days
Farmland classification: Not prime farmland

Map Unit Composition

Ustic torrifluvents and similar soils: 95 percent
Minor components: 5 percent
Estimates are based on observations, descriptions, and transects of the mapunit.

Description of Ustic Torrifluvents

Setting

Landform: Flood plains, stream terraces
Down-slope shape: Linear
Across-slope shape: Linear
Parent material: Sandy, clayey, stratified loamy

Typical profile

A - 0 to 6 inches: variable
C - 6 to 60 inches: stratified loamy sand to clay loam

Properties and qualities

Slope: 0 to 3 percent
Depth to restrictive feature: More than 80 inches
Drainage class: Well drained
Runoff class: Low
Capacity of the most limiting layer to transmit water (Ksat): Moderately high to high (0.20 to 2.00 in/hr)
Depth to water table: More than 80 inches
Frequency of flooding: None
Frequency of ponding: None
Calcium carbonate, maximum content: 10 percent
Maximum salinity: Nonsaline to very slightly saline (0.0 to 2.0 mmhos/cm)
Available water supply, 0 to 60 inches: Moderate (about 8.6 inches)

Interpretive groups

Land capability classification (irrigated): 2e
Land capability classification (nonirrigated): 3e
Hydrologic Soil Group: B
Ecological site: R069XY037CO - Saline Overflow LRU's A and B
Other vegetative classification: OVERFLOW (069BY036CO)

Hydric soil rating: No

Minor Components

Other soils

Percent of map unit: 4 percent
Hydric soil rating: No

Pleasant

Percent of map unit: 1 percent
Landform: Depressions
Hydric soil rating: Yes

Data Source Information

Soil Survey Area: El Paso County Area, Colorado
Survey Area Data: Version 19, Aug 31, 2021

El Paso County Area, Colorado

105—Vona sandy loam, warm, 3 to 6 percent slopes

Map Unit Setting

National map unit symbol: 2t517
Elevation: 3,400 to 6,000 feet
Mean annual precipitation: 14 to 16 inches
Mean annual air temperature: 48 to 54 degrees F
Frost-free period: 130 to 170 days
Farmland classification: Not prime farmland

Map Unit Composition

Vona, warm, and similar soils: 85 percent
Minor components: 15 percent
Estimates are based on observations, descriptions, and transects of the mapunit.

Description of Vona, Warm

Setting

Landform: Sand sheets
Landform position (two-dimensional): Backslope
Landform position (three-dimensional): Head slope, side slope
Down-slope shape: Linear
Across-slope shape: Linear
Parent material: Eolian sands

Typical profile

A - 0 to 5 inches: sandy loam
Bt1 - 5 to 12 inches: sandy loam
Bt2 - 12 to 17 inches: sandy loam
Bk - 17 to 41 inches: sandy loam
BCk - 41 to 79 inches: loamy sand

Properties and qualities

Slope: 3 to 6 percent
Depth to restrictive feature: More than 80 inches
Drainage class: Somewhat excessively drained
Runoff class: Very low
Capacity of the most limiting layer to transmit water (Ksat): High (2.00 to 6.00 in/hr)
Depth to water table: More than 80 inches
Frequency of flooding: None
Frequency of ponding: None
Calcium carbonate, maximum content: 15 percent
Gypsum, maximum content: 2 percent
Maximum salinity: Nonsaline to very slightly saline (0.0 to 3.9 mmhos/cm)
Sodium adsorption ratio, maximum: 2.0
Available water supply, 0 to 60 inches: Moderate (about 7.2 inches)

Interpretive groups

Land capability classification (irrigated): 4e
Land capability classification (nonirrigated): 4e
Hydrologic Soil Group: A
Ecological site: R067BY024CO - Sandy Plains
Forage suitability group: Loamy, Dry (G067BW019CO)
Other vegetative classification: Sandy Plains #24 (067XY024CO_2), Loamy, Dry (G067BW019CO)
Hydric soil rating: No

Minor Components

Olnest, warm

Percent of map unit: 5 percent
Landform: Hillslopes
Landform position (two-dimensional): Summit, backslope
Landform position (three-dimensional): Side slope, crest
Down-slope shape: Linear
Across-slope shape: Linear
Ecological site: R067BY024CO - Sandy Plains
Other vegetative classification: Loamy, Dry (G067BW019CO)
Hydric soil rating: No

Valent, warm

Percent of map unit: 5 percent
Landform: Sand sheets
Landform position (two-dimensional): Shoulder, backslope
Landform position (three-dimensional): Side slope, crest
Down-slope shape: Convex
Across-slope shape: Convex
Ecological site: R067BY015CO - Deep Sand
Other vegetative classification: Deep Sands #15 (067XY015CO_3), Sandy, Dry (G067BW026CO)
Hydric soil rating: No

Otero, warm

Percent of map unit: 5 percent
Landform: Hillslopes
Landform position (two-dimensional): Shoulder, backslope
Landform position (three-dimensional): Head slope, side slope
Down-slope shape: Linear
Across-slope shape: Linear
Ecological site: R067BY024CO - Sandy Plains
Other vegetative classification: SANDY PLAINS (067XY024CO_1), Loamy, Dry (G067BW019CO)
Hydric soil rating: No

Data Source Information

Soil Survey Area: El Paso County Area, Colorado
Survey Area Data: Version 19, Aug 31, 2021

FEMA FLOODPLAIN MAP

National Flood Hazard Layer FIRMette

FEMA

104°33'38"W 38°52'7"N

104°33'1"W 38°51'39"N

0 250 500 1,000 1,500 2,000 Feet

1:6,000

Basemap: USGS National Map: Orthoimagery: Data refreshed October, 2020

Legend

SEE FIS REPORT FOR DETAILED LEGEND AND INDEX MAP FOR FIRM PANEL LAYOUT

SPECIAL FLOOD HAZARD AREAS

- Without Base Flood Elevation (BFE) *Zone A, V, A99*
- With BFE or Depth *Zone AE, AO, AH, VE, AR*
- Regulatory Floodway

OTHER AREAS OF FLOOD HAZARD

- 0.2% Annual Chance Flood Hazard, Areas of 1% annual chance flood with average depth less than one foot or with drainage areas of less than one square mile *Zone X*
- Future Conditions 1% Annual Chance Flood Hazard *Zone X*
- Area with Reduced Flood Risk due to Levee. See Notes. *Zone X*
- Area with Flood Risk due to Levee *Zone D*

OTHER AREAS

- NO SCREEN Area of Minimal Flood Hazard *Zone X*
- Effective LOMRs
- Area of Undetermined Flood Hazard *Zone D*

GENERAL STRUCTURES

- Channel, Culvert, or Storm Sewer
- Levee, Dike, or Floodwall

OTHER FEATURES

- B 20.2 17.5 Cross Sections with 1% Annual Chance Water Surface Elevation
- 8 Coastal Transect
- 513 Base Flood Elevation Line (BFE)
- Limit of Study
- Jurisdiction Boundary
- Coastal Transect Baseline
- Profile Baseline
- Hydrographic Feature

MAP PANELS

- Digital Data Available
- No Digital Data Available
- Unmapped

N

The pin displayed on the map is an approximate point selected by the user and does not represent an authoritative property location.

This map complies with FEMA's standards for the use of digital flood maps if it is not void as described below. The basemap shown complies with FEMA's basemap accuracy standards

The flood hazard information is derived directly from the authoritative NFHL web services provided by FEMA. This map was exported on 8/1/2021 at 4:25 PM and does not reflect changes or amendments subsequent to this date and time. The NFHL and effective information may change or become superseded by new data over time.

This map image is void if the one or more of the following map elements do not appear: basemap imagery, flood zone labels, legend, scale bar, map creation date, community identifiers, FIRM panel number, and FIRM effective date. Map images for unmapped and unmodernized areas cannot be used for regulatory purposes.

HYDROLOGIC CALCULATIONS

FALCON ACRES

(Area Runoff Coefficient Summary)

EXISTING CONDITIONS

		RESIDENTIAL (5 ACRE)			*UNDEVELOPED*			*GRAVEL STREET*			*GRAVEL YARD*			*WEIGHTED*	
BASIN	**TOTAL AREA**	**AREA**	**C_5**	**C_{100}**	**AREA**	**C_5**	**C_{100}**	**AREA**	**C_5**	**C_{100}**	**AREA**	**C_5**	**C_{100}**	**C_5**	**C_{100}**
	(Acres)	*(Acres)*			*(Acres)*			*(Acres)*			*(Acres)*				
OA1	207.64	0.00	0.12	0.39	207.64	0.09	0.36	0.00	0.59	0.70	0.00	0.30	0.50	0.09	0.36
OA2.1	469.43	0.00	0.12	0.39	469.43	0.09	0.36	0.00	0.59	0.70	0.00	0.30	0.50	0.09	0.36
OA2.2	14.49	0.00	0.12	0.39	14.49	0.09	0.36	0.00	0.59	0.70	0.00	0.30	0.50	0.09	0.36
OA3	24.42	0.00	0.12	0.39	24.42	0.09	0.36	0.00	0.59	0.70	0.00	0.30	0.50	0.09	0.36
OB1	1.00	0.00	0.12	0.39	1.00	0.09	0.36	0.00	0.59	0.70	0.00	0.30	0.50	0.09	0.36
A	33.80	0.00	0.12	0.39	33.80	0.09	0.36	0.00	0.59	0.70	0.00	0.30	0.50	0.09	0.36
B	15.48	0.00	0.12	0.39	15.48	0.09	0.36	0.00	0.59	0.70	0.00	0.30	0.50	0.09	0.36

DEVELOPED CONDITIONS

		RESIDENTIAL (5 ACRE)			*UNDEVELOPED*			*GRAVEL STREET*			*GRAVEL YARD*			*WEIGHTED*	
BASIN	**TOTAL AREA**	**AREA**	**C_5**	**C_{100}**	**AREA**	**C_5**	**C_{100}**	**AREA**	**C_5**	**C_{100}**	**AREA**	**C_5**	**C_{100}**	**C_5**	**C_{100}**
	(Acres)	*(Acres)*			*(Acres)*			*(Acres)*			*(Acres)*				
OA1	207.64	0.00	0.12	0.39	207.64	0.09	0.36	0.00	0.59	0.70	0.00	0.30	0.50	0.09	0.36
OA2.1	469.43	0.00	0.12	0.39	469.43	0.09	0.36	0.00	0.59	0.70	0.00	0.30	0.50	0.09	0.36
OA2.2	14.49	0.00	0.12	0.39	14.49	0.09	0.36	0.00	0.59	0.70	0.00	0.30	0.50	0.09	0.36
OA3	24.42	0.00	0.12	0.39	24.42	0.09	0.36	0.00	0.59	0.70	0.00	0.30	0.50	0.09	0.36
OB1	1.00	0.00	0.12	0.39	1.00	0.09	0.36	0.00	0.59	0.70	0.00	0.30	0.50	0.09	0.36
A1	6.10	4.93	0.12	0.39	0.75	0.09	0.36	0.42	0.59	0.70	0.00	0.30	0.50	0.11	0.36
A2	6.24	5.93	0.12	0.39	0.00	0.09	0.36	0.31	0.59	0.70	0.00	0.30	0.50	0.11	0.37
A3.1	9.13	8.75	0.12	0.39	0.00	0.09	0.36	0.38	0.59	0.70	0.00	0.30	0.50	0.12	0.37
A3.2	12.34	10.58	0.12	0.39	0.87	0.09	0.36	0.89	0.59	0.70	0.00	0.30	0.50	0.11	0.36
B	15.48	12.33	0.12	0.39	2.79	0.09	0.36	0.36	0.59	0.70	0.00	0.30	0.50	0.13	0.39

Calculated by: JF
Date: 11/14/202
Checked by: LD

FALCON ACRES

AREA DRAINAGE SUMMARY

EXISTING CONDITIONS

		WEIGHTED		*OVERLAND*				*STREET / CHANNEL FLOW*				T_t	*INTENSITY*		*TOTAL FLOWS*	
BASIN	**AREA TOTAL**	C_5	C_{100}	C_5	**Length**	**Height**	T_C	**Length**	**Slope**	**Velocity**	T_t	**TOTAL**	I_5	I_{100}	Q_5	Q_{100}
	(Acres)	** For Calcs See Runoff Summary*			*(ft)*	*(ft)*	*(min)*	*(ft)*	*(%)*	*(fps)*	*(min)*	*(min)*	*(in/hr)*	*(in/hr)*	*(c.f.s.)*	*(c.f.s.)*
OA1	207.64	0.09	0.36	0.09	300	12.0	20.2	4540	1.5%	0.6	123.6	143.7	0.9	1.4	**16.9**	**104.1**
OA2.1	469.43	0.09	0.36	0.09	300	10.0	21.4	6860	2.1%	0.7	157.8	179.2	0.8	1.2	**32.5**	**199.2**
OA2.2	14.49	0.09	0.36	0.09	300	6.0	25.4	950	2.0%	0.7	22.4	47.8	1.9	3.0	**2.5**	**15.8**
OA3	24.42	0.09	0.36	0.09	300	20.0	17.0	900	1.0%	0.5	30.0	47.0	1.9	3.1	**4.2**	**26.9**
OB1	1.00	0.09	0.36	0.09	300	15.9	18.4	80	5.3%	1.2	1.2	19.5	3.1	5.2	**0.3**	**1.9**
A	33.80	0.09	0.36	0.09	300	13.5	19.4	650	3.2%	0.9	12.1	31.5	2.4	3.9	**7.3**	**47.9**
B	15.48	0.09	0.36	0.09	300	10.0	21.4	400	0.5%	0.4	18.9	40.3	2.1	3.4	**2.9**	**18.8**

DEVELOPED CONDITIONS

		WEIGHTED		*OVERLAND*				*STREET / CHANNEL FLOW*				T_t	*INTENSITY*		*TOTAL FLOWS*	
BASIN	**AREA TOTAL**	C_5	C_{100}	C_5	**Length**	**Height**	T_C	**Length**	**Slope**	**Velocity**	T_t	**TOTAL**	I_5	I_{100}	Q_5	Q_{100}
	(Acres)	** For Calcs See Runoff Summary*			*(ft)*	*(ft)*	*(min)*	*(ft)*	*(%)*	*(fps)*	*(min)*	*(min)*	*(in/hr)*	*(in/hr)*	*(c.f.s.)*	*(c.f.s.)*
OA1	207.64	0.09	0.36	0.09	300	12.0	20.2	4540	1.5%	0.6	123.6	143.7	0.9	1.4	**16.9**	**104.1**
OA2.1	469.43	0.09	0.36	0.09	300	10.0	21.4	6860	2.1%	0.7	157.8	179.2	0.8	1.2	**32.5**	**199.2**
OA2.2	14.49	0.09	0.36	0.09	300	6.0	25.4	950	2.0%	0.7	22.4	47.8	1.9	3.0	**2.5**	**15.8**
OA3	24.42	0.09	0.36	0.09	300	20.0	17.0	900	1.0%	0.5	30.0	47.0	1.9	3.1	**4.2**	**26.9**
OB1	1.00	0.09	0.36	0.09	300	15.9	18.4	80	5.3%	1.2	1.2	19.5	3.1	5.2	**0.3**	**1.9**
A1	6.10	0.11	0.36	0.11	300	10.0	21.1	425	1.2%	0.9	7.8	28.8	2.5	4.1	**1.7**	**9.1**
A2	6.24	0.11	0.37	0.11	300	13.5	18.9	490	3.7%	1.3	6.1	25.0	2.7	4.5	**1.9**	**10.4**
A3.1	9.13	0.12	0.37	0.12	300	6.0	24.8	730	0.7%	0.6	21.2	46.0	1.9	3.1	**2.0**	**10.6**
A3.2	12.34	0.11	0.36	0.11	30	4.0	4.2	1030	1.2%	0.8	22.7	26.9	2.6	4.3	**3.5**	**19.2**
B	15.48	0.13	0.39	0.13	10	1.0	2.6	700	0.5%	0.5	23.6	26.2	2.7	4.4	**5.2**	**26.6**

Note: Due to their size, flows from Basins OA1 & OA2.1 were determined using SCS method

Calculated by: JF
Date: 11/14/2022
Checked by: LD

EXISTING AND DEVELOPED CONDITIONS

Site:	Falcon Acres
Basin:	OA1
Basin Area:	207.64 ac
Method:	Soil Conservation Service Hydrograph
HSG:	A, good condition
CN=	50
Tc=	143.7 min
L=	86.22 min
P10-2=	2.3"
P100-2=	3.6"
S=	10.0"
Ia=	2.0"
Q10=	0.009"
Q100=	0.221"
D=	19.11 min
Tp=	95.78 min or 1.60 hr
Qp10=	0.88 cfs
Qp100=	21.62 cfs

EXISTING AND DEVELOPED CONDITIONS

Site:	Falcon Acres
Basin:	OA2.1
Basin Area:	469.43 ac
Method:	Soil Conservation Service Hydrograph
HSG:	A, good condition
CN=	50
Tc=	179.2 min
L=	107.52 min
P10-2=	2.3"
P100-2=	3.6"
S=	10.0"
Ia=	2.0"
Q10=	0.009"
Q100=	0.221"
D=	23.83 min
Tp=	119.44 min or 1.99 hr
Qp10=	1.60 cfs
Qp100=	39.33 cfs

HYDRAULIC CALCULATIONS

MANNING'S EQUATION for OPEN CHANNEL FLOW

Project:	**Falcon Acres**	Location:	Channel A2-North	Need 26.2 CFS	
By:	John Fornander	Date:	1/7/2023		
Chk By:		Date:		version 12-2004	

Mannings Formula

$Q = (1.486/n)AR_h^{2/3}S^{1/2}$

R = A/P

A = cross sectional area

P= wetted perimeter

S = slope of channel

n = Manning's roughness coefficient

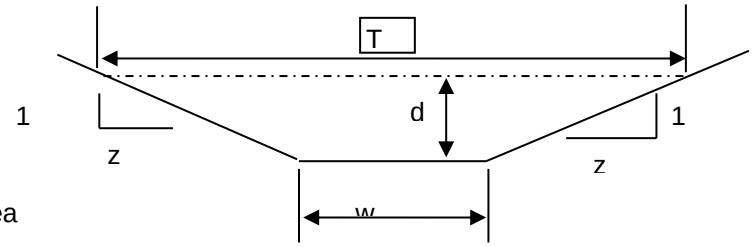

$V = (1.49/n)R_h^{2/3}S^{1/2}$

Q = V x A

INPUT	
z (sideslope)=	4
z (sideslope)=	3
b (btm width, ft)=	0
d (depth, ft)=	1.6
S (slope, ft/ft)	0.005
n_{low} =	0.03
n_{high} =	0.03

Clear Data Entry Cells

Depth, ft	Area, sf	Wetted Perimeter, ft	Hydraulic Radius, ft	Low N Velocity, fps	Low N Flow, cfs	High N Velocity, fps	High N Flow, cfs		
1.6	8.96	11.66	0.77	2.93901969	26.3336	2.93902	26.3336	T =	11.2
								Dm =	0.800
				Sc low =	0.0149	Sc high =	0.0149		
				.7 Sc	1.3 Sc	.7 Sc	1.3 Sc		
				0.0104	0.0194	0.0104	0.0194		

s_c = critical slope ft / ft

T = top width of the stream

d_m = a/T = mean depth of flow

Created by: Mike O'Shea

MANNING'S EQUATION for OPEN CHANNEL FLOW

Project:	**Falcon Acres**	Location:	Channel A2-South	Need 26.2 CFS	
By:	John Fornander	Date:	1/7/2023		
Chk By:		Date:		version 12-2004	

Mannings Formula

$Q = (1.486/n)AR_h^{2/3}S^{1/2}$

R = A/P

A = cross sectional area

P= wetted perimeter

S = slope of channel

n = Manning's roughness coefficient

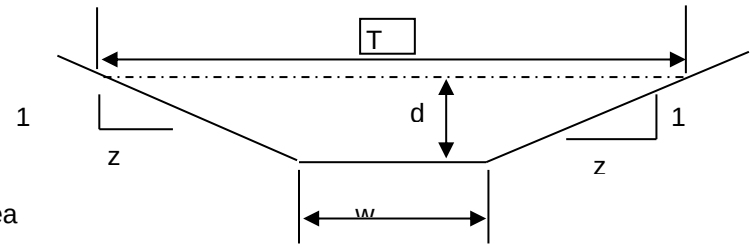

$V = (1.49/n)R_h^{2/3}S^{1/2}$

Q = V x A

	INPUT
z (sideslope)=	6
z (sideslope)=	3
b (btm width, ft)=	0
d (depth, ft)=	1.1
S (slope, ft/ft)	0.034
n_{low} =	0.03
n_{high} =	0.03

Clear Data Entry Cells

Depth, ft	Area, sf	Wetted Perimeter, ft	Hydraulic Radius, ft	Low N Velocity, fps	Low N Flow, cfs	High N Velocity, fps	High N Flow, cfs		
1.1	5.45	10.17	0.54	6.02225166	32.7912	6.022252	32.7912	T =	9.9
								Dm =	0.550
				Sc low =	0.0166	Sc high =	0.0166		
				.7 Sc	1.3 Sc	.7 Sc	1.3 Sc		
				0.0116	0.0215	0.0116	0.0215		

s_c = critical slope ft / ft

T = top width of the stream

d_m = a/T = mean depth of flow

Created by: Mike O'Shea

MANNING'S EQUATION for OPEN CHANNEL FLOW

Project:	**Falcon Acres**	Location:	Overflow Channel A3	Need 153.0 CFS	
By:	John Fornander	Date:	1/7/2023		
Chk By:		Date:		version 12-2004	

Mannings Formula

$Q = (1.486/n)AR_h^{2/3}S^{1/2}$

R = A/P

A = cross sectional area

P= wetted perimeter

S = slope of channel

n = Manning's roughness coefficient

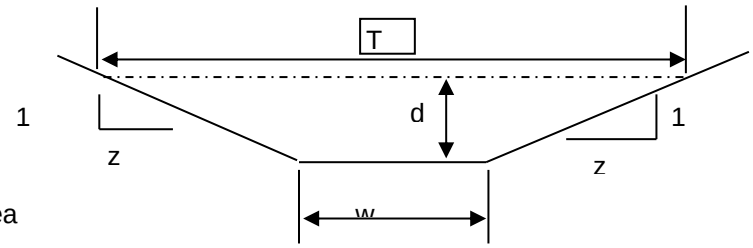

$V = (1.49/n)R_h^{2/3}S^{1/2}$

Q = V x A

	INPUT
z (sideslope)=	4
z (sideslope)=	4
b (btm width, ft)=	4
d (depth, ft)=	2
S (slope, ft/ft)	0.0154
n_{low} =	0.03
n_{high} =	0.03

Clear Data Entry Cells

Depth, ft	Area, sf	Wetted Perimeter, ft	Hydraulic Radius, ft	Low N Velocity, fps	Low N Flow, cfs	High N Velocity, fps	High N Flow, cfs		
2	24.00	20.49	1.17	6.82976084	163.914	6.829761	163.914	T =	20
								Dm =	1.200
				Sc low =	0.0127	Sc high =	0.0127		
				.7 Sc	1.3 Sc	.7 Sc	1.3 Sc		
				0.0089	0.0166	0.0089	0.0166		

s_c = critical slope ft / ft

T = top width of the stream

d_m = a/T = mean depth of flow

Created by: Mike O'Shea

MANNING'S EQUATION for OPEN CHANNEL FLOW

Project:	**Falcon Acres**	Location:	Channel A4	Need 1.6 CFS	
By:	John Fornander	Date:	1/7/2023		
Chk By:		Date:		version 12-2004	

Mannings Formula

$Q = (1.486/n)AR_h^{2/3}S^{1/2}$

R = A/P

A = cross sectional area

P= wetted perimeter

S = slope of channel

n = Manning's roughness coefficient

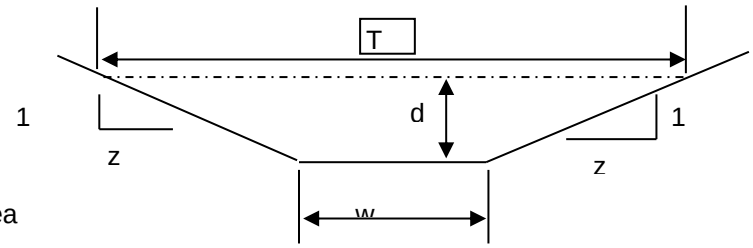

$V = (1.49/n)R_h^{2/3}S^{1/2}$

Q = V x A

	INPUT
z (sideslope)=	6
z (sideslope)=	3
b (btm width, ft)=	0
d (depth, ft)=	0.5
S (slope, ft/ft)	0.034
n_{low} =	0.03
n_{high} =	0.03

Clear Data Entry Cells

Depth, ft	Area, sf	Wetted Perimeter, ft	Hydraulic Radius, ft	Low N Velocity, fps	Low N Flow, cfs	High N Velocity, fps	High N Flow, cfs		
0.5	1.13	4.62	0.24	3.5601287	4.00514	3.560129	4.00514	T =	4.5
								Dm =	0.250
				Sc low =	0.0216	Sc high =	0.0216		
				.7 Sc	1.3 Sc	.7 Sc	1.3 Sc		
				0.0151	0.0280	0.0151	0.0280		

s_c = critical slope ft / ft

T = top width of the stream

d_m = a/T = mean depth of flow

Created by: Mike O'Shea

MANNING'S EQUATION for OPEN CHANNEL FLOW

Project:	**Falcon Acres**	Location:	Channel A5		Need 16.0 CFS
By:	John Fornander	Date:	1/7/2023		
Chk By:		Date:			version 12-2004

Mannings Formula

$Q = (1.486/n)AR_h^{2/3}S^{1/2}$

R = A/P

A = cross sectional area

P= wetted perimeter

S = slope of channel

n = Manning's roughness coefficient

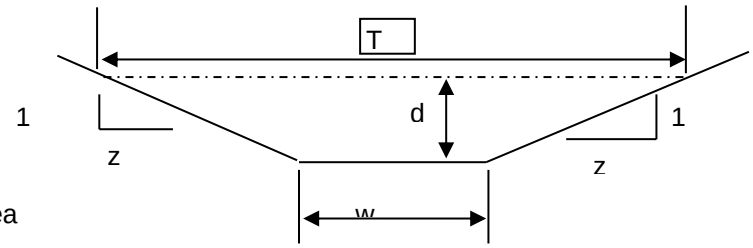

$V = (1.49/n)R_h^{2/3}S^{1/2}$

Q = V x A

	INPUT
z (sideslope)=	6
z (sideslope)=	3
b (btm width, ft)=	0
d (depth, ft)=	1
S (slope, ft/ft)	0.034
n_{low} =	0.03
n_{high} =	0.03

Clear Data Entry Cells

				Low N		High N			
Depth, ft	Area, sf	Wetted Perimeter, ft	Hydraulic Radius, ft	Velocity, fps	Flow, cfs	Velocity, fps	Flow, cfs		
1	4.50	9.25	0.49	5.65148263	25.4317	5.651483	25.4317	T =	9
								Dm =	0.500
				Sc low =	0.0171	Sc high =	0.0171		
				.7 Sc	1.3 Sc	.7 Sc	1.3 Sc		
				0.0120	0.0222	0.0120	0.0222		

s_c = critical slope ft / ft

T = top width of the stream

d_m = a/T = mean depth of flow

Created by: Mike O'Shea

MANNING'S EQUATION for OPEN CHANNEL FLOW

Project:	**Falcon Acres**	Location:	Overflow Channel B	Need 181.45 CFS	
By:	John Fornander	Date:	1/7/2023		
Chk By:		Date:		version 12-2004	

Mannings Formula

$Q = (1.486/n)AR_h^{2/3}S^{1/2}$

R = A/P

A = cross sectional area

P= wetted perimeter

S = slope of channel

n = Manning's roughness coefficient

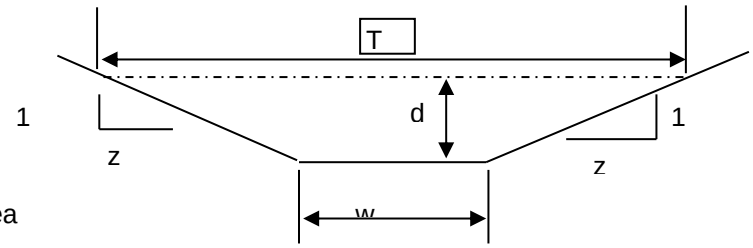

$V = (1.49/n)R_h^{2/3}S^{1/2}$

Q = V x A

	INPUT
z (sideslope)=	4
z (sideslope)=	4
b (btm width, ft)=	4
d (depth, ft)=	2.2
S (slope, ft/ft)	0.013
n_{low} =	0.03
n_{high} =	0.03

Clear Data Entry Cells

Depth, ft	Area, sf	Wetted Perimeter, ft	Hydraulic Radius, ft	Low N Velocity, fps	Low N Flow, cfs	High N Velocity, fps	High N Flow, cfs		
2.2	28.16	22.14	1.27	6.62960466	186.69	6.629605	186.69	T =	21.6
								Dm =	1.304
				Sc low =	0.0124	Sc high =	0.0124		
				.7 Sc	1.3 Sc	.7 Sc	1.3 Sc		
				0.0087	0.0161	0.0087	0.0161		

s_c = critical slope ft / ft

T = top width of the stream

d_m = a/T = mean depth of flow

Created by: Mike O'Shea

MATERIAL PROPERTY DATA SHEET

TMAX 3K™

Permanent • 3-D Woven • UV Stable •
High Performance Turf Reinforcement Mat

DESCRIPTION

TMAX 3K is a High-Performance Turf Reinforcement Mat (HP-TRM) produced by weaving 100% UV-stabilized, high denier synthetic mono-filament yarns woven into permanent, high-strength, three-dimensional structure. The optimized properties of the material provide immediate erosion control with excellent vegetation establishment and long-term turf reinforcement. The strength, resiliency, and durability of TMAX 3K provides a decades long design life and suitability for harsh environments including debris flow and light vehicle traffic. When incorporated with high-load anchors, PP5-Pro can add strength to sub-surface soil and improve slope stability.

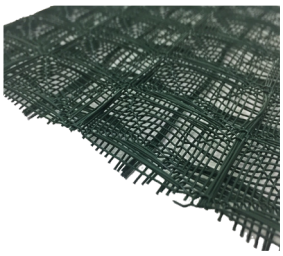

Material Content	
Woven, Single Layer	Green or Tan

Standard Roll Sizes				
Width	11.5 ft	(3.5 m)	11.5 ft	(3.5 m)
Length	78 ft	(24.0 m)	156 ft	(47.5 m)
Weight ± 10%	72 lb	(33.0 kg)	144 lb	(66.0 kg)
Area	100 sy	(83.6 m^2)	200 SY	(167.0 m^2)

Material available in custom roll sizes

Approvals & Classification	
Classification	FHWA: Type 5.C / ECTC: 5.F
TTI Approvals	Class 2 Type H
NTPEP Number	ECP-2022-01-011

Index Property	Test Method	MARV	
Thickness	ASTM D6525	0.3 in.	(6 mm)
Mass/Unit Area	ASTM D6566	7.0 oz/sy	(225 g/sm)
Tensile Strength – MD	ASTM D6818	3,000 lbs/ft	(43.8 kN/m)
Tensile Strength – TD	ASTM D6818	3,000 lbs/ft	(43.8 kN/m)
Elongation - MD	ASTM D6818	25%	
Elongation – TD	ASTM D6818	25%	
UV Stability	ASTM D4355	90% @3000 hr	
UV Stability	ASTM D7238	90% @3000 hr	
Resiliency	ASTM D6524	70%	
Light Penetration	ASTM D6567	35%	
Biomass Improvement	ASTM D7322	300%	
Specific Gravity	ASTM D792	57.4 lb/ft^3	(0.92 g/cm^3)
Porosity	ECTC	96%	
Carbon Footprint	GHG*	1.3 kg CO_2 e/m^2	

Design Parameters		
Property	**Unvegetated**	**Vegetated[3]**
RUSLE C Factor[2]	N/A	N/A
Slope Maximum Gradient[1]	0.5H:1V	0.5H:1V
Permissible Shear Stress[2]	2.3 psf	14.0 psf (670 Pa)
Permissible Velocity[2]	8.0 fps	20.0 fps (6.1 m/s)
τ_{veg} / τ_{TRM} (HEC-15)	N/A	0.35

Manning's n Roughness (HEC-15)		
τ_{lower}	τ_{mid}	τ_{upper}
0.033	0.030	0.028

1 Maximum Gradient a recomendation for typical installations.
2 Hydraulic thresholds compliant with ASTM D6459/D6460 but generalized for typical applications.
3 Vegetated values dependent on established stand of vegetation
*WRI/WBCSD Greenhouse Gas Protocol: Product Life Cycle Accounting and Reporting Standard, 2013.

Rev. 4.2023
Scan for additional and updated product information, or click here.

Western Green • 4609 E. Boonville-New Harmony Rd.
Evansville, IN 47725 • (800) 772-2040
westerngreen.com

CIRCULAR CONDUIT FLOW (Normal & Critical Depth Computation)

Project: **Falcon Acres**
Pipe ID: **A1**

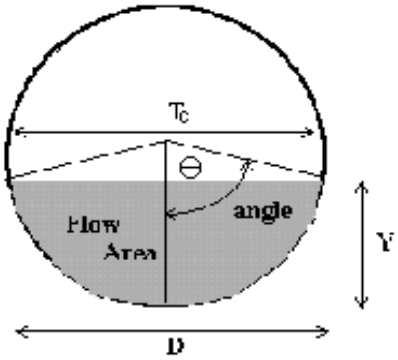

Design Information (Input)			
Pipe Invert Slope	So =	0.0076	ft/ft
Pipe Manning's n-value	n =	0.0130	
Pipe Diameter	D =	36.00	inches
Design discharge	**Q =**	**37.32**	**cfs**
Full-flow Capacity (Calculated)			
Full-flow area	Af =	7.07	sq ft
Full-flow wetted perimeter	Pf =	9.42	ft
Half Central Angle	Theta =	3.14	radians
Full-flow capacity	Qf =	58.30	cfs
Calculation of Normal Flow Condition			
Half Central Angle (0<Theta<3.14)	Theta =	1.73	radians
Flow area	An =	4.27	sq ft
Top width	Tn =	2.96	ft
Wetted perimeter	Pn =	5.20	ft
Flow depth	Yn =	1.74	ft
Flow velocity	Vn =	8.75	fps
Discharge	Qn =	37.32	cfs
Percent Full Flow	Flow =	64.0%	of full flow
Normal Depth Froude Number	Fr_n =	1.28	supercritical
Calculation of Critical Flow Condition			
Half Central Angle (0<Theta-c<3.14)	Theta-c =	1.90	radians
Critical flow area	Ac =	4.97	sq ft
Critical top width	Tc =	2.84	ft
Critical flow depth	Yc =	1.99	ft
Critical flow velocity	Vc =	7.51	fps
Critical Depth Froude Number	Fr_c =	1.00	

Determination of Culvert Headwater and Outlet Protection

Project: Falcon Acres
Basin ID: A1

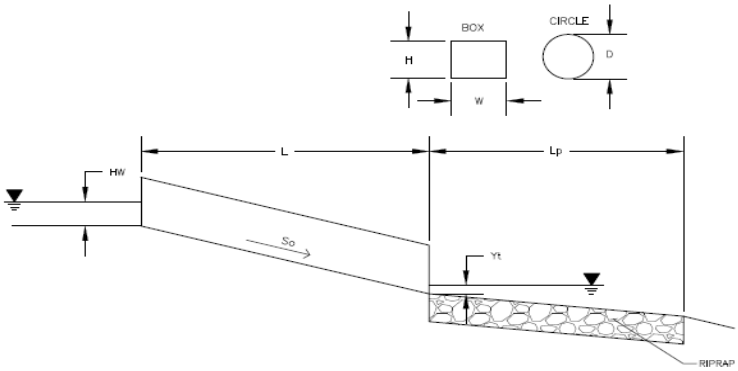

Soil Type:
Choose One:
○ Sandy
◉ Non-Sandy

Supercritical Flow! Using Da to calculate protection type.

Design Information (Input):

Design Discharge	Q =	74.63	cfs
Circular Culvert:			
Barrel Diameter in Inches	D =	36	inches
Inlet Edge Type (Choose from pull-down list)	Grooved End Projection		
Box Culvert:		**OR**	
Barrel Height (Rise) in Feet	Height (Rise) =		ft
Barrel Width (Span) in Feet	Width (Span) =		ft
Inlet Edge Type (Choose from pull-down list)			
Number of Barrels	No =	2	
Inlet Elevation	Elev IN =	29	ft
Outlet Elevation **OR** Slope	Elev OUT =	28.5	ft
Culvert Length	L =	66	ft
Manning's Roughness	n =	0.013	
Bend Loss Coefficient	k_b =	0	
Exit Loss Coefficient	k_x =	1	
Tailwater Surface Elevation	Elev Y_t =		ft
Max Allowable Channel Velocity	V =	7	ft/s

Required Protection (Output):

Tailwater Surface Height	Y_t =	1.20	ft
Flow Area at Max Channel Velocity	A_t =	5.33	ft^2
Culvert Cross Sectional Area Available	A =	7.07	ft^2
Entrance Loss Coefficient	k_e =	0.20	
Friction Loss Coefficient	k_f =	0.47	
Sum of All Losses Coefficients	k_s =	1.67	ft
Culvert Normal Depth	Y_n =	1.75	ft
Culvert Critical Depth	Y_c =	1.99	ft
Tailwater Depth for Design	d =	2.49	ft
Adjusted Diameter **OR** Adjusted Rise	D_a =	2.37	ft
Expansion Factor	1/(2*tan(Θ)) =	6.36	
Flow/Diameter$^{2.5}$ **OR** Flow/(Span * Rise$^{1.5}$)	Q/D^2.5 =	2.39	$ft^{0.5}/s$
Froude Number	Fr =	1.28	**Supercritical!**
Tailwater/Adjusted Diameter **OR** Tailwater/Adjusted Rise	Yt/D =	0.51	
Inlet Control Headwater	HW_I =	2.94	ft
Outlet Control Headwater	HW_O =	2.72	
Design Headwater Elevation	**HW =**	**31.94**	**ft**
Headwater/Diameter OR Headwater/Rise Ratio	**HW/D =**	**0.98**	
Minimum Theoretical Riprap Size	d_{50} =	6	in
Nominal Riprap Size	d_{50} =	9	in
UDFCD Riprap Type	**Type =**	**L**	
Length of Protection	**L_p =**	**10**	**ft**
Width of Protection	**T =**	**5**	**ft**

CIRCULAR CONDUIT FLOW (Normal & Critical Depth Computation)

Project: **Falcon Acres**
Pipe ID: **A3.1**

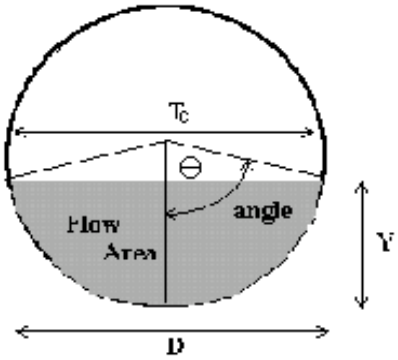

Design Information (Input)			
Pipe Invert Slope	So =	0.0070	ft/ft
Pipe Manning's n-value	n =	0.0130	
Pipe Diameter	D =	24.00	inches
Design discharge	**Q =**	**18.75**	**cfs**
Full-flow Capacity (Calculated)			
Full-flow area	Af =	3.14	sq ft
Full-flow wetted perimeter	Pf =	6.28	ft
Half Central Angle	Theta =	3.14	radians
Full-flow capacity	Qf =	18.98	cfs
Calculation of Normal Flow Condition			
Half Central Angle (0<Theta<3.14)	Theta =	2.24	radians
Flow area	An =	2.72	sq ft
Top width	Tn =	1.57	ft
Wetted perimeter	Pn =	4.47	ft
Flow depth	Yn =	1.62	ft
Flow velocity	Vn =	6.89	fps
Discharge	Qn =	18.75	cfs
Percent Full Flow	Flow =	98.8%	of full flow
Normal Depth Froude Number	Fr_n =	0.92	subcritical
Calculation of Critical Flow Condition			
Half Central Angle (0<Theta-c<3.14)	Theta-c =	2.16	radians
Critical flow area	Ac =	2.63	sq ft
Critical top width	Tc =	1.66	ft
Critical flow depth	Yc =	1.56	ft
Critical flow velocity	Vc =	7.14	fps
Critical Depth Froude Number	Fr_c =	1.00	

Determination of Culvert Headwater and Outlet Protection

Project: Falcon Acres
Basin ID: A3.1

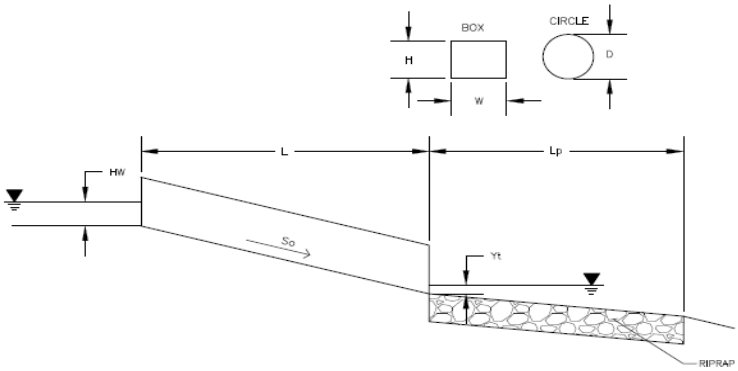

Soil Type:
Choose One:
○ Sandy
◉ Non-Sandy

Design Information (Input):

Design Discharge	Q =	37.5	cfs
Circular Culvert:			
Barrel Diameter in Inches	D =	24	inches
Inlet Edge Type (Choose from pull-down list)	Grooved End Projection		
Box Culvert:		**OR**	
Barrel Height (Rise) in Feet	Height (Rise) =		ft
Barrel Width (Span) in Feet	Width (Span) =		ft
Inlet Edge Type (Choose from pull-down list)			
Number of Barrels	No =	2	
Inlet Elevation	Elev IN =	28.1	ft
Outlet Elevation **OR** Slope	Elev OUT =	27.82	ft
Culvert Length	L =	40	ft
Manning's Roughness	n =	0.013	
Bend Loss Coefficient	k_b =	0	
Exit Loss Coefficient	k_x =	1	
Tailwater Surface Elevation	Elev Y_t =		ft
Max Allowable Channel Velocity	V =	7	ft/s

Required Protection (Output):

Tailwater Surface Height	Y_t =	0.80	ft
Flow Area at Max Channel Velocity	A_t =	2.68	ft^2
Culvert Cross Sectional Area Available	A =	3.14	ft^2
Entrance Loss Coefficient	k_e =	0.20	
Friction Loss Coefficient	k_f =	0.49	
Sum of All Losses Coefficients	k_s =	1.69	ft
Culvert Normal Depth	Y_n =	1.62	ft
Culvert Critical Depth	Y_c =	1.56	ft
Tailwater Depth for Design	d =	1.78	ft
Adjusted Diameter **OR** Adjusted Rise	D_a =	-	ft
Expansion Factor	1/(2*tan(Θ)) =	4.13	
Flow/Diameter$^{2.5}$ **OR** Flow/(Span * Rise$^{1.5}$)	Q/D^2.5 =	3.31	$ft^{0.5}/s$
Froude Number	Fr =	0.92	
Tailwater/Adjusted Diameter **OR** Tailwater/Adjusted Rise	Yt/D =	0.40	
Inlet Control Headwater	HW_I =	2.50	ft
Outlet Control Headwater	HW_O =	2.44	
Design Headwater Elevation	**HW =**	**30.60**	**ft**
Headwater/Diameter OR Headwater/Rise Ratio	**HW/D =**	**1.25**	
Minimum Theoretical Riprap Size	d_{50} =	5	in
Nominal Riprap Size	d_{50} =	6	in
UDFCD Riprap Type	**Type =**	**VL**	
Length of Protection	**L_p =**	**6**	**ft**
Width of Protection	**T =**	**4**	**ft**

CIRCULAR CONDUIT FLOW (Normal & Critical Depth Computation)

Project: **Falcon Acres**
Pipe ID: **B**

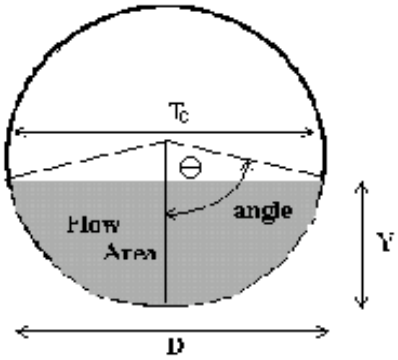

Design Information (Input)			
Pipe Invert Slope	So =	0.0100	ft/ft
Pipe Manning's n-value	n =	0.0130	
Pipe Diameter	D =	18.00	inches
Design discharge	**Q =**	**4.00**	**cfs**
Full-flow Capacity (Calculated)			
Full-flow area	Af =	1.77	sq ft
Full-flow wetted perimeter	Pf =	4.71	ft
Half Central Angle	Theta =	3.14	radians
Full-flow capacity	Qf =	10.53	cfs
Calculation of Normal Flow Condition			
Half Central Angle (0<Theta<3.14)	Theta =	1.42	radians
Flow area	An =	0.72	sq ft
Top width	Tn =	1.48	ft
Wetted perimeter	Pn =	2.14	ft
Flow depth	Yn =	0.64	ft
Flow velocity	Vn =	5.55	fps
Discharge	Qn =	4.00	cfs
Percent Full Flow	Flow =	38.0%	of full flow
Normal Depth Froude Number	Fr_n =	1.40	supercritical
Calculation of Critical Flow Condition			
Half Central Angle (0<Theta-c<3.14)	Theta-c =	1.59	radians
Critical flow area	Ac =	0.91	sq ft
Critical top width	Tc =	1.50	ft
Critical flow depth	Yc =	0.77	ft
Critical flow velocity	Vc =	4.41	fps
Critical Depth Froude Number	Fr_c =	1.00	

Determination of Culvert Headwater and Outlet Protection

Project: Falcon Acres
Basin ID: B

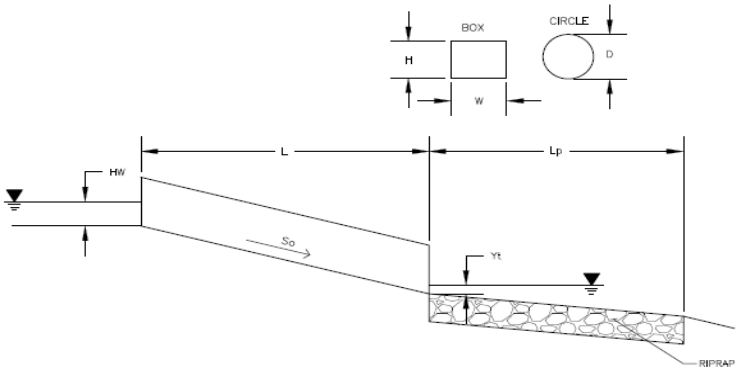

Soil Type:
Choose One:
○ Sandy
◉ Non-Sandy

Design Information (Input):

	Design Discharge	Q =	4	cfs
Circular Culvert:				
	Barrel Diameter in Inches	D =	18	inches
	Inlet Edge Type (Choose from pull-down list)	Grooved End Projection		
Box Culvert:		**OR**		
	Barrel Height (Rise) in Feet	Height (Rise) =		ft
	Barrel Width (Span) in Feet	Width (Span) =		ft
	Inlet Edge Type (Choose from pull-down list)			
	Number of Barrels	No =	1	
	Inlet Elevation	Elev IN =	25.02	ft
	Outlet Elevation **OR** Slope	Elev OUT =	24.85	ft
	Culvert Length	L =	34	ft
	Manning's Roughness	n =	0.013	
	Bend Loss Coefficient	k_b =	0	
	Exit Loss Coefficient	k_x =	1	
	Tailwater Surface Elevation	Elev Y_t =		ft
	Max Allowable Channel Velocity	V =	7	ft/s

Required Protection (Output):

Tailwater Surface Height	Y_t =	0.60	ft
Flow Area at Max Channel Velocity	A_t =	0.57	ft^2
Culvert Cross Sectional Area Available	A =	1.77	ft^2
Entrance Loss Coefficient	k_e =	0.20	
Friction Loss Coefficient	k_f =	0.62	
Sum of All Losses Coefficients	k_s =	1.82	ft
Culvert Normal Depth	Y_n =	0.78	ft
Culvert Critical Depth	Y_c =	0.77	ft
Tailwater Depth for Design	d =	1.13	ft
Adjusted Diameter **OR** Adjusted Rise	D_a =	-	ft
Expansion Factor	1/(2*tan(Θ)) =	6.28	
Flow/Diameter$^{2.5}$ **OR** Flow/(Span * Rise$^{1.5}$)	Q/D^2.5 =	1.45	$ft^{0.5}/s$
Froude Number	Fr =	0.96	
Tailwater/Adjusted Diameter **OR** Tailwater/Adjusted Rise	Yt/D =	0.40	
Inlet Control Headwater	HW_I =	1.09	ft
Outlet Control Headwater	HW_O =	1.11	
Design Headwater Elevation	**HW =**	**26.13**	**ft**
Headwater/Diameter OR Headwater/Rise Ratio	**HW/D =**	**0.74**	
Minimum Theoretical Riprap Size	d_{50} =	2	in
Nominal Riprap Size	d_{50} =	6	in
UDFCD Riprap Type	**Type =**	**VL**	
Length of Protection	**L_p =**	**5**	**ft**
Width of Protection	**T =**	**3**	**ft**

CIRCULAR CONDUIT FLOW (Normal & Critical Depth Computation)

Project: **Falcon Acres**
Pipe ID: **Lot 3**

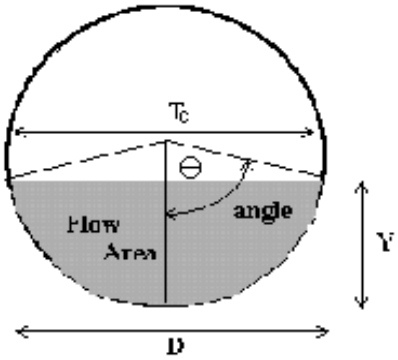

Design Information (Input)			
Pipe Invert Slope	So =	0.0050	ft/ft
Pipe Manning's n-value	n =	0.0130	
Pipe Diameter	D =	24.00	inches
Design discharge	**Q =**	**16.00**	**cfs**
Full-flow Capacity (Calculated)			
Full-flow area	Af =	3.14	sq ft
Full-flow wetted perimeter	Pf =	6.28	ft
Half Central Angle	Theta =	3.14	radians
Full-flow capacity	Qf =	16.04	cfs
Calculation of Normal Flow Condition			
Half Central Angle (0<Theta<3.14)	Theta =	2.26	radians
Flow area	An =	2.75	sq ft
Top width	Tn =	1.55	ft
Wetted perimeter	Pn =	4.52	ft
Flow depth	Yn =	1.63	ft
Flow velocity	Vn =	5.82	fps
Discharge	Qn =	16.00	cfs
Percent Full Flow	Flow =	99.8%	of full flow
Normal Depth Froude Number	Fr_n =	0.77	subcritical
Calculation of Critical Flow Condition			
Half Central Angle (0<Theta-c<3.14)	Theta-c =	2.03	radians
Critical flow area	Ac =	2.43	sq ft
Critical top width	Tc =	1.79	ft
Critical flow depth	Yc =	1.44	ft
Critical flow velocity	Vc =	6.60	fps
Critical Depth Froude Number	Fr_c =	1.00	

Determination of Culvert Headwater and Outlet Protection

Project: Falcon Acres
Basin ID: Lot 3

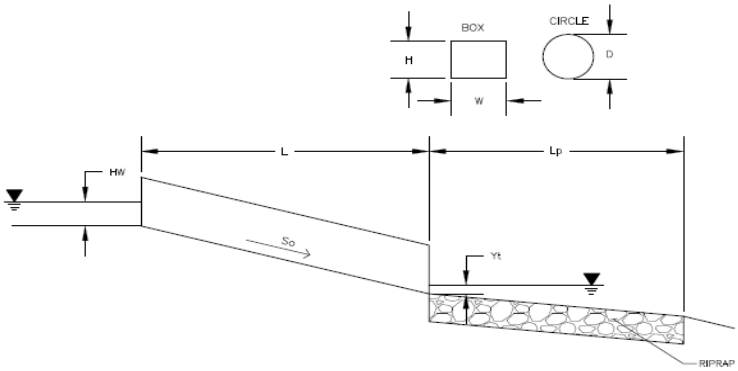

Soil Type:
Choose One:
○ Sandy
◉ Non-Sandy

Design Information (Input):

Design Discharge	Q =	32	cfs
Circular Culvert:			
Barrel Diameter in Inches	D =	24	inches
Inlet Edge Type (Choose from pull-down list)	Grooved End Projection		
Box Culvert:		**OR**	
Barrel Height (Rise) in Feet	Height (Rise) =		ft
Barrel Width (Span) in Feet	Width (Span) =		ft
Inlet Edge Type (Choose from pull-down list)			
Number of Barrels	No =	2	
Inlet Elevation	Elev IN =	29.14	ft
Outlet Elevation **OR** Slope	Elev OUT =	29	ft
Culvert Length	L =	24	ft
Manning's Roughness	n =	0.013	
Bend Loss Coefficient	k_b =	0	
Exit Loss Coefficient	k_x =	1	
Tailwater Surface Elevation	Elev Y_t =		ft
Max Allowable Channel Velocity	V =	7	ft/s

Required Protection (Output):

Tailwater Surface Height	Y_t =	0.80	ft
Flow Area at Max Channel Velocity	A_t =	2.29	ft^2
Culvert Cross Sectional Area Available	A =	3.14	ft^2
Entrance Loss Coefficient	k_e =	0.20	
Friction Loss Coefficient	k_f =	0.30	
Sum of All Losses Coefficients	k_s =	1.50	ft
Culvert Normal Depth	Y_n =	1.52	ft
Culvert Critical Depth	Y_c =	1.44	ft
Tailwater Depth for Design	d =	1.72	ft
Adjusted Diameter **OR** Adjusted Rise	D_a =	-	ft
Expansion Factor	1/(2*tan(Θ)) =	4.65	
Flow/Diameter$^{2.5}$ **OR** Flow/(Span * Rise$^{1.5}$)	Q/D^2.5 =	2.83	$ft^{0.5}/s$
Froude Number	Fr =	0.90	
Tailwater/Adjusted Diameter **OR** Tailwater/Adjusted Rise	Yt/D =	0.40	
Inlet Control Headwater	HW_I =	2.20	ft
Outlet Control Headwater	HW_O =	2.18	
Design Headwater Elevation	**HW =**	**31.34**	**ft**
Headwater/Diameter OR Headwater/Rise Ratio	**HW/D =**	**1.10**	
Minimum Theoretical Riprap Size	d_{50} =	5	in
Nominal Riprap Size	d_{50} =	6	in
UDFCD Riprap Type	**Type =**	**VL**	
Length of Protection	**L_p =**	**6**	**ft**
Width of Protection	**T =**	**4**	**ft**

CIRCULAR CONDUIT FLOW (Normal & Critical Depth Computation)

Project: **Falcon Acres**
Pipe ID: **Lot 4**

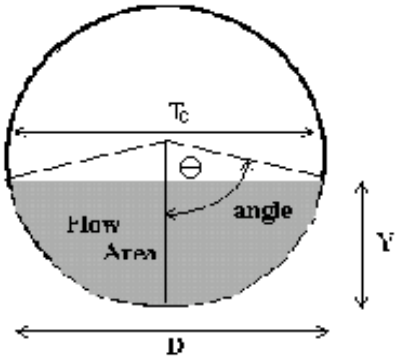

Design Information (Input)			
Pipe Invert Slope	So =	0.0100	ft/ft
Pipe Manning's n-value	n =	0.0130	
Pipe Diameter	D =	18.00	inches
Design discharge	**Q =**	**3.76**	**cfs**
Full-flow Capacity (Calculated)			
Full-flow area	Af =	1.77	sq ft
Full-flow wetted perimeter	Pf =	4.71	ft
Half Central Angle	Theta =	3.14	radians
Full-flow capacity	Qf =	10.53	cfs
Calculation of Normal Flow Condition			
Half Central Angle (0<Theta<3.14)	Theta =	1.40	radians
Flow area	An =	0.69	sq ft
Top width	Tn =	1.48	ft
Wetted perimeter	Pn =	2.09	ft
Flow depth	Yn =	0.62	ft
Flow velocity	Vn =	5.46	fps
Discharge	Qn =	3.76	cfs
Percent Full Flow	Flow =	35.7%	of full flow
Normal Depth Froude Number	Fr_n =	1.41	supercritical
Calculation of Critical Flow Condition			
Half Central Angle (0<Theta-c<3.14)	Theta-c =	1.56	radians
Critical flow area	Ac =	0.87	sq ft
Critical top width	Tc =	1.50	ft
Critical flow depth	Yc =	0.74	ft
Critical flow velocity	Vc =	4.32	fps
Critical Depth Froude Number	Fr_c =	1.00	

Determination of Culvert Headwater and Outlet Protection

Project: Falcon Acres
Basin ID: Lot 4

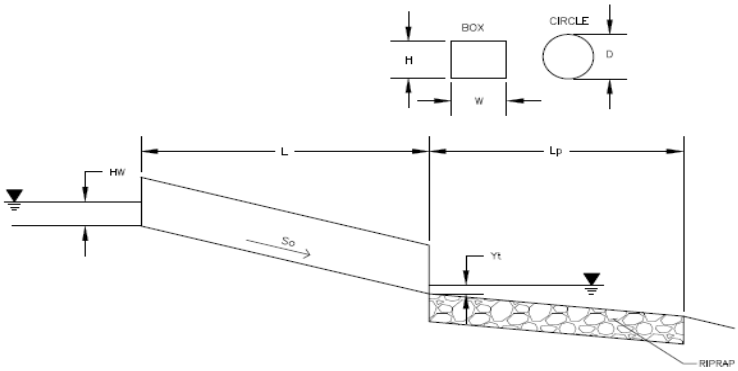

Soil Type:
Choose One:
- ○ Sandy
- ◉ Non-Sandy

Design Information (Input):

	Design Discharge	Q =	3.76	cfs
Circular Culvert:				
	Barrel Diameter in Inches	D =	18	inches
	Inlet Edge Type (Choose from pull-down list)	Grooved End Projection		
Box Culvert:		**OR**		
	Barrel Height (Rise) in Feet	Height (Rise) =		ft
	Barrel Width (Span) in Feet	Width (Span) =		ft
	Inlet Edge Type (Choose from pull-down list)			
	Number of Barrels	No =	1	
	Inlet Elevation	Elev IN =	28	ft
	Outlet Elevation **OR** Slope	Elev OUT =	27.82	ft
	Culvert Length	L =	36	ft
	Manning's Roughness	n =	0.013	
	Bend Loss Coefficient	k_b =	0	
	Exit Loss Coefficient	k_x =	1	
	Tailwater Surface Elevation	Elev Y_t =		ft
	Max Allowable Channel Velocity	V =	7	ft/s

Required Protection (Output):

	Tailwater Surface Height	Y_t =	0.60	ft
	Flow Area at Max Channel Velocity	A_t =	0.54	ft^2
	Culvert Cross Sectional Area Available	A =	1.77	ft^2
	Entrance Loss Coefficient	k_e =	0.20	
	Friction Loss Coefficient	k_f =	0.65	
	Sum of All Losses Coefficients	k_s =	1.85	ft
	Culvert Normal Depth	Y_n =	0.75	ft
	Culvert Critical Depth	Y_c =	0.74	ft
	Tailwater Depth for Design	d =	1.12	ft
	Adjusted Diameter **OR** Adjusted Rise	D_a =	-	ft
	Expansion Factor	1/(2*tan(Θ)) =	6.36	
	Flow/Diameter$^{2.5}$ **OR** Flow/(Span * Rise$^{1.5}$)	Q/D^2.5 =	1.36	$ft^{0.5}/s$
	Froude Number	Fr =	0.97	
	Tailwater/Adjusted Diameter **OR** Tailwater/Adjusted Rise	Yt/D =	0.40	
	Inlet Control Headwater	HW_I =	1.06	ft
	Outlet Control Headwater	HW_O =	1.07	
	Design Headwater Elevation	**HW =**	**29.07**	**ft**
	Headwater/Diameter OR Headwater/Rise Ratio	**HW/D =**	**0.71**	
	Minimum Theoretical Riprap Size	d_{50} =	2	in
	Nominal Riprap Size	d_{50} =	6	in
	UDFCD Riprap Type	**Type =**	**VL**	
	Length of Protection	**L_p =**	**5**	**ft**
	Width of Protection	**T =**	**3**	**ft**

CIRCULAR CONDUIT FLOW (Normal & Critical Depth Computation)

Project: **Falcon Acres**
Pipe ID: **OA1**

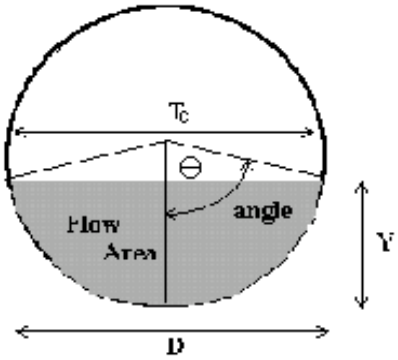

Design Information (Input)			
Pipe Invert Slope	So =	0.0100	ft/ft
Pipe Manning's n-value	n =	0.0130	
Pipe Diameter	D =	18.00	inches
Design discharge	**Q =**	**7.21**	**cfs**
Full-flow Capacity (Calculated)			
Full-flow area	Af =	1.77	sq ft
Full-flow wetted perimeter	Pf =	4.71	ft
Half Central Angle	Theta =	3.14	radians
Full-flow capacity	Qf =	10.53	cfs
Calculation of Normal Flow Condition			
Half Central Angle (0<Theta<3.14)	Theta =	1.79	radians
Flow area	An =	1.12	sq ft
Top width	Tn =	1.46	ft
Wetted perimeter	Pn =	2.68	ft
Flow depth	Yn =	0.91	ft
Flow velocity	Vn =	6.42	fps
Discharge	Qn =	7.21	cfs
Percent Full Flow	Flow =	68.5%	of full flow
Normal Depth Froude Number	Fr_n =	1.29	supercritical
Calculation of Critical Flow Condition			
Half Central Angle (0<Theta-c<3.14)	Theta-c =	1.97	radians
Critical flow area	Ac =	1.31	sq ft
Critical top width	Tc =	1.38	ft
Critical flow depth	Yc =	1.04	ft
Critical flow velocity	Vc =	5.52	fps
Critical Depth Froude Number	Fr_c =	1.00	

Determination of Culvert Headwater and Outlet Protection

Project: Falcon Acres
Basin ID: OA1

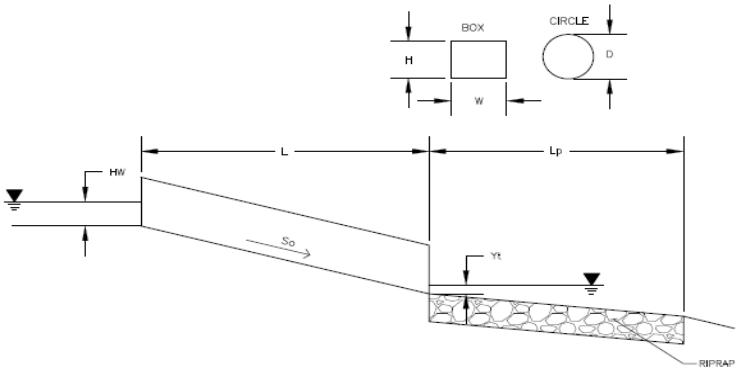

Soil Type:
Choose One:
○ Sandy
◉ Non-Sandy

Supercritical Flow! Using Da to calculate protection type.

Design Information (Input):

Design Discharge	Q =	21.62	cfs
Circular Culvert:			
Barrel Diameter in Inches	D =	18	inches
Inlet Edge Type (Choose from pull-down list)	Grooved End Projection		
Box Culvert:		**OR**	
Barrel Height (Rise) in Feet	Height (Rise) =		ft
Barrel Width (Span) in Feet	Width (Span) =		ft
Inlet Edge Type (Choose from pull-down list)			
Number of Barrels	No =	3	
Inlet Elevation	Elev IN =	29.99	ft
Outlet Elevation **OR** Slope	Elev OUT =	29.71	ft
Culvert Length	L =	28	ft
Manning's Roughness	n =	0.013	
Bend Loss Coefficient	k_b =	0	
Exit Loss Coefficient	k_x =	1	
Tailwater Surface Elevation	Elev Y_t =		ft
Max Allowable Channel Velocity	V =	7	ft/s

Required Protection (Output):

Tailwater Surface Height	Y_t =	0.60	ft
Flow Area at Max Channel Velocity	A_t =	1.03	ft^2
Culvert Cross Sectional Area Available	A =	1.77	ft^2
Entrance Loss Coefficient	k_e =	0.20	
Friction Loss Coefficient	k_f =	0.51	
Sum of All Losses Coefficients	k_s =	1.71	ft
Culvert Normal Depth	Y_n =	0.91	ft
Culvert Critical Depth	Y_c =	1.04	ft
Tailwater Depth for Design	d =	1.27	ft
Adjusted Diameter **OR** Adjusted Rise	D_a =	1.21	ft
Expansion Factor	1/(2*tan(Θ)) =	6.13	
Flow/Diameter$^{2.5}$ **OR** Flow/(Span * Rise$^{1.5}$)	Q/D^2.5 =	2.62	$ft^{0.5}/s$
Froude Number	Fr =	1.29	**Supercritical!**
Tailwater/Adjusted Diameter **OR** Tailwater/Adjusted Rise	Yt/D =	0.50	
Inlet Control Headwater	HW_I =	1.56	ft
Outlet Control Headwater	HW_O =	1.43	
Design Headwater Elevation	**HW =**	**31.55**	**ft**
Headwater/Diameter OR Headwater/Rise Ratio	**HW/D =**	**1.04**	
Minimum Theoretical Riprap Size	d_{50} =	3	in
Nominal Riprap Size	d_{50} =	6	in
UDFCD Riprap Type	**Type =**	**VL**	
Length of Protection	**L_p =**	**5**	**ft**
Width of Protection	**T =**	**3**	**ft**

CIRCULAR CONDUIT FLOW (Normal & Critical Depth Computation)

Project: **Falcon Acres**
Pipe ID: **A2**

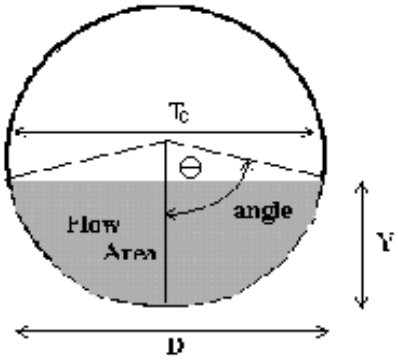

Design Information (Input)			
Pipe Invert Slope	So =	0.0050	ft/ft
Pipe Manning's n-value	n =	0.0130	
Pipe Diameter	D =	24.00	inches
Design discharge	**Q =**	**13.10**	**cfs**
Full-flow Capacity (Calculated)			
Full-flow area	Af =	3.14	sq ft
Full-flow wetted perimeter	Pf =	6.28	ft
Half Central Angle	Theta =	3.14	radians
Full-flow capacity	Qf =	16.04	cfs
Calculation of Normal Flow Condition			
Half Central Angle (0<Theta<3.14)	Theta =	1.95	radians
Flow area	An =	2.30	sq ft
Top width	Tn =	1.85	ft
Wetted perimeter	Pn =	3.91	ft
Flow depth	Yn =	1.37	ft
Flow velocity	Vn =	5.69	fps
Discharge	Qn =	13.10	cfs
Percent Full Flow	Flow =	81.7%	of full flow
Normal Depth Froude Number	Fr_n =	0.90	subcritical
Calculation of Critical Flow Condition			
Half Central Angle (0<Theta-c<3.14)	Theta-c =	1.88	radians
Critical flow area	Ac =	2.17	sq ft
Critical top width	Tc =	1.91	ft
Critical flow depth	Yc =	1.30	ft
Critical flow velocity	Vc =	6.05	fps
Critical Depth Froude Number	Fr_c =	1.00	

Determination of Culvert Headwater and Outlet Protection

Project: Falcon Acres
Basin ID: A2

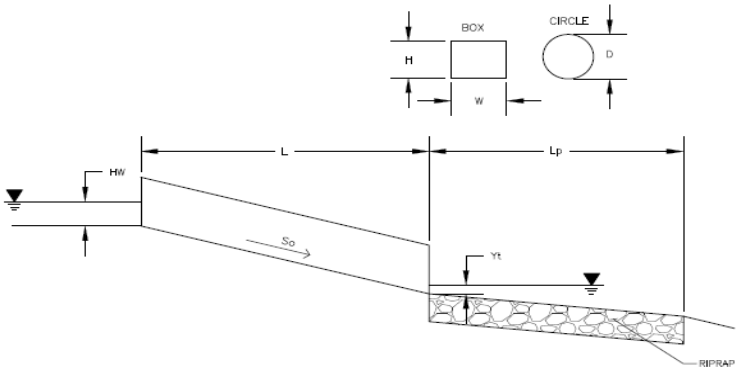

Soil Type:
Choose One:
○ Sandy
◉ Non-Sandy

Design Information (Input):

Design Discharge	Q =	26.2	cfs
Circular Culvert:			
Barrel Diameter in Inches	D =	24	inches
Inlet Edge Type (Choose from pull-down list)	Grooved End Projection		
Box Culvert:		**OR**	
Barrel Height (Rise) in Feet	Height (Rise) =		ft
Barrel Width (Span) in Feet	Width (Span) =		ft
Inlet Edge Type (Choose from pull-down list)			
Number of Barrels	No =	2	
Inlet Elevation	Elev IN =	31.33	ft
Outlet Elevation **OR** Slope	Elev OUT =	31.08	ft
Culvert Length	L =	50	ft
Manning's Roughness	n =	0.013	
Bend Loss Coefficient	k_b =	0	
Exit Loss Coefficient	k_x =	1	
Tailwater Surface Elevation	Elev Y_t =		ft
Max Allowable Channel Velocity	V =	7	ft/s

Required Protection (Output):

Tailwater Surface Height	Y_t =	0.80	ft
Flow Area at Max Channel Velocity	A_t =	1.87	ft^2
Culvert Cross Sectional Area Available	A =	3.14	ft^2
Entrance Loss Coefficient	k_e =	0.20	
Friction Loss Coefficient	k_f =	0.62	
Sum of All Losses Coefficients	k_s =	1.82	ft
Culvert Normal Depth	Y_n =	1.37	ft
Culvert Critical Depth	Y_c =	1.30	ft
Tailwater Depth for Design	d =	1.65	ft
Adjusted Diameter **OR** Adjusted Rise	D_a =	-	ft
Expansion Factor	1/(2*tan(Θ)) =	5.34	
Flow/Diameter$^{2.5}$ **OR** Flow/(Span * Rise$^{1.5}$)	Q/D^2.5 =	2.32	$ft^{0.5}/s$
Froude Number	Fr =	0.90	
Tailwater/Adjusted Diameter **OR** Tailwater/Adjusted Rise	Yt/D =	0.40	
Inlet Control Headwater	HW_I =	1.92	ft
Outlet Control Headwater	HW_O =	1.89	
Design Headwater Elevation	**HW =**	**33.25**	**ft**
Headwater/Diameter OR Headwater/Rise Ratio	**HW/D =**	**0.96**	
Minimum Theoretical Riprap Size	d_{50} =	4	in
Nominal Riprap Size	d_{50} =	6	in
UDFCD Riprap Type	**Type =**	**VL**	
Length of Protection	**L_p =**	**6**	**ft**
Width of Protection	**T =**	**4**	**ft**

FSEDB CALCULATIONS

DETENTION BASIN STAGE-STORAGE TABLE BUILDER

MHFD-Detention, Version 4.04 (February 2021)

Project: _____

Basin ID: _____

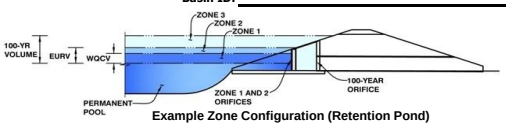

Example Zone Configuration (Retention Pond)

Watershed Information — **Area > 1 sq.mi. for WQ Facility**

Selected BMP Type =	**EDB**	
Watershed Area =	749.74	acres
Watershed Length =	7,710	ft
Watershed Length to Centroid =	4,220	ft
Watershed Slope =	0.023	ft/ft
Watershed Imperviousness =	2.30%	percent
Percentage Hydrologic Soil Group A =	49.0%	percent
Percentage Hydrologic Soil Group B =	51.0%	percent
Percentage Hydrologic Soil Groups C/D =	0.0%	percent
Target WQCV Drain Time =	40.0	hours
Location for 1-hr Rainfall Depths =	User Input	

After providing required inputs above including 1-hour rainfall depths, click 'Run CUHP' to generate runoff hydrographs using the embedded Colorado Urban Hydrograph Procedure.

			Optional User Overrides	
Water Quality Capture Volume (WQCV) =	1.082	acre-feet		acre-feet
Excess Urban Runoff Volume (EURV) =	1.146	acre-feet		acre-feet
2-yr Runoff Volume (P1 = 1.19 in.) =	0.921	acre-feet	1.19	inches
5-yr Runoff Volume (P1 = 1.5 in.) =	5.107	acre-feet	1.50	inches
10-yr Runoff Volume (P1 = 1.75 in.) =	12.535	acre-feet	1.75	inches
25-yr Runoff Volume (P1 = 2 in.) =	31.934	acre-feet	2.00	inches
50-yr Runoff Volume (P1 = 2.25 in.) =	44.501	acre-feet	2.25	inches
100-yr Runoff Volume (P1 = 2.52 in.) =	66.413	acre-feet	2.52	inches
500-yr Runoff Volume (P1 = 3 in.) =	94.184	acre-feet	3.00	inches
Approximate 2-yr Detention Volume =	0.634	acre-feet		
Approximate 5-yr Detention Volume =	1.044	acre-feet		
Approximate 10-yr Detention Volume =	4.133	acre-feet		
Approximate 25-yr Detention Volume =	6.398	acre-feet		
Approximate 50-yr Detention Volume =	7.104	acre-feet		
Approximate 100-yr Detention Volume =	11.732	acre-feet		

Define Zones and Basin Geometry

Select Zone 1 Storage Volume (Required) =		acre-feet
Select Zone 2 Storage Volume (Optional) =		acre-feet
Select Zone 3 Storage Volume (Optional) =		acre-feet
Total Detention Basin Volume =		acre-feet
Initial Surcharge Volume (ISV) =	user	ft^3
Initial Surcharge Depth (ISD) =	user	ft
Total Available Detention Depth (H_{total}) =	user	ft
Depth of Trickle Channel (H_{TC}) =	user	ft
Slope of Trickle Channel (S_{TC}) =	user	ft/ft
Slopes of Main Basin Sides (S_{main}) =	user	H:V
Basin Length-to-Width Ratio ($R_{L/W}$) =	user	
Initial Surcharge Area (A_{ISV}) =	user	ft^2
Surcharge Volume Length (L_{ISV}) =	user	ft
Surcharge Volume Width (W_{ISV}) =	user	ft
Depth of Basin Floor (H_{FLOOR}) =	user	ft
Length of Basin Floor (L_{FLOOR}) =	user	ft
Width of Basin Floor (W_{FLOOR}) =	user	ft
Area of Basin Floor (A_{FLOOR}) =	user	ft^2
Volume of Basin Floor (V_{FLOOR}) =	user	ft^3
Depth of Main Basin (H_{MAIN}) =	user	ft
Length of Main Basin (L_{MAIN}) =	user	ft
Width of Main Basin (W_{MAIN}) =	user	ft
Area of Main Basin (A_{MAIN}) =	user	ft^2
Volume of Main Basin (V_{MAIN}) =	user	ft^3
Calculated Total Basin Volume (V_{total}) =	**user**	acre-feet

Depth Increment = _____ ft

Stage - Storage Description	Stage (ft)	Optional Override Stage (ft)	Length (ft)	Width (ft)	Area (ft^2)	Optional Override Area (ft^2)	Area (acre)	Volume (ft^3)	Volume (ac-ft)
Top of Micropool	--	0.00	--	--	--	0	0.000		
6528	--	1.00	--	--	--	61,210	1.405	30,603	0.703
6529	--	2.00	--	--	--	155,160	3.562	138,787	3.186
6530	--	3.00	--	--	--	265,710	6.100	349,222	8.017
6531	--	4.00	--	--	--	371,930	8.538	668,042	15.336
6532	--	5.00	--	--	--	485,990	11.157	1,097,002	25.184
6533	--	6.00	--	--	--	638,440	14.657	1,659,217	38.090
6534	--	7.00	--	--	--	701,030	16.093	2,328,952	53.465

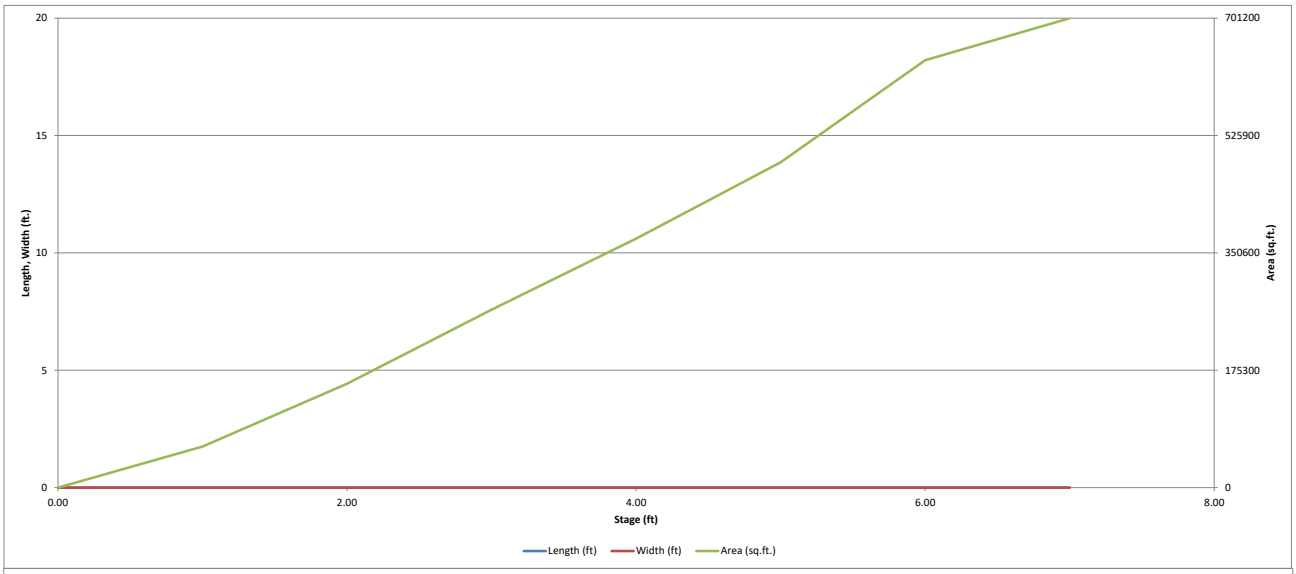
20
15
10
5
0
Length, Width (ft.)
701200
525900
350600
175300
0
Area (sq.ft.)
0.00
2.00
4.00
6.00
8.00
Stage (ft)
Length (ft)
Width (ft)
Area (sq.ft.)

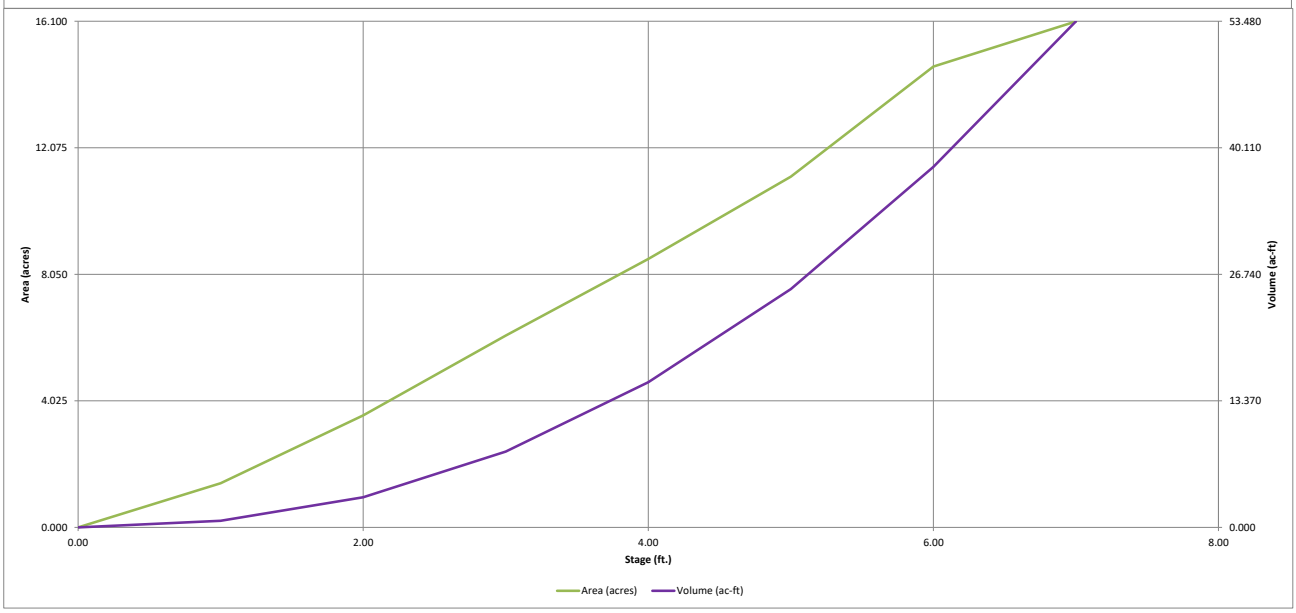
16.100
12.075
8.050
4.025
0.000
Area (acres)
53.480
40.110
26.740
13.370
0.000
Volume (ac-ft)
0.00
2.00
4.00
6.00
8.00
Stage (ft.)
Area (acres)
Volume (ac-ft)

DETENTION BASIN STAGE-STORAGE TABLE BUILDER

MHFD-Detention, Version 4.04 (February 2021)

Project: _____

Basin ID: _____

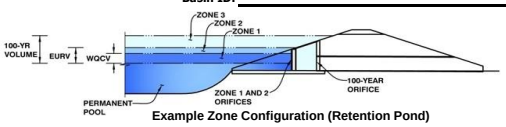

Example Zone Configuration (Retention Pond)

Watershed Information

Selected BMP Type =	**EDB**	
Watershed Area =	16.48	acres
Watershed Length =	1,100	ft
Watershed Length to Centroid =	100	ft
Watershed Slope =	0.026	ft/ft
Watershed Imperviousness =	6.70%	percent
Percentage Hydrologic Soil Group A =	100.0%	percent
Percentage Hydrologic Soil Group B =	0.0%	percent
Percentage Hydrologic Soil Groups C/D =	0.0%	percent
Target WQCV Drain Time =	40.0	hours
Location for 1-hr Rainfall Depths =	User Input	

Note: Lc/L Ratio < 0.1

Lc / L Ratio = 0.09

After providing required inputs above including 1-hour rainfall depths, click 'Run CUHP' to generate runoff hydrographs using the embedded Colorado Urban Hydrograph Procedure.

			Optional User Overrides	
Water Quality Capture Volume (WQCV) =	0.065	acre-feet		acre-feet
Excess Urban Runoff Volume (EURV) =	0.073	acre-feet		acre-feet
2-yr Runoff Volume (P1 = 1.19 in.) =	0.033	acre-feet	1.19	inches
5-yr Runoff Volume (P1 = 1.5 in.) =	0.060	acre-feet	1.50	inches
10-yr Runoff Volume (P1 = 1.75 in.) =	0.082	acre-feet	1.75	inches
25-yr Runoff Volume (P1 = 2 in.) =	0.279	acre-feet	2.00	inches
50-yr Runoff Volume (P1 = 2.25 in.) =	0.486	acre-feet	2.25	inches
100-yr Runoff Volume (P1 = 2.52 in.) =	0.775	acre-feet	2.52	inches
500-yr Runoff Volume (P1 = 3 in.) =	1.263	acre-feet	3.00	inches
Approximate 2-yr Detention Volume =	0.043	acre-feet		
Approximate 5-yr Detention Volume =	0.059	acre-feet		
Approximate 10-yr Detention Volume =	0.079	acre-feet		
Approximate 25-yr Detention Volume =	0.110	acre-feet		
Approximate 50-yr Detention Volume =	0.164	acre-feet		
Approximate 100-yr Detention Volume =	0.305	acre-feet		

Define Zones and Basin Geometry

Select Zone 1 Storage Volume (Required) =		acre-feet
Select Zone 2 Storage Volume (Optional) =		acre-feet
Select Zone 3 Storage Volume (Optional) =		acre-feet
Total Detention Basin Volume =		acre-feet
Initial Surcharge Volume (ISV) =	user	ft^3
Initial Surcharge Depth (ISD) =	user	ft
Total Available Detention Depth (H_{total}) =	user	ft
Depth of Trickle Channel (H_{TC}) =	user	ft
Slope of Trickle Channel (S_{TC}) =	user	ft/ft
Slopes of Main Basin Sides (S_{main}) =	user	H:V
Basin Length-to-Width Ratio ($R_{L/W}$) =	user	
Initial Surcharge Area (A_{ISV}) =	user	ft^2
Surcharge Volume Length (L_{ISV}) =	user	ft
Surcharge Volume Width (W_{ISV}) =	user	ft
Depth of Basin Floor (H_{FLOOR}) =	user	ft
Length of Basin Floor (L_{FLOOR}) =	user	ft
Width of Basin Floor (W_{FLOOR}) =	user	ft
Area of Basin Floor (A_{FLOOR}) =	user	ft^2
Volume of Basin Floor (V_{FLOOR}) =	user	ft^3
Depth of Main Basin (H_{MAIN}) =	user	ft
Length of Main Basin (L_{MAIN}) =	user	ft
Width of Main Basin (W_{MAIN}) =	user	ft
Area of Main Basin (A_{MAIN}) =	user	ft^2
Volume of Main Basin (V_{MAIN}) =	user	ft^3
Calculated Total Basin Volume (V_{total}) =	**user**	acre-feet

Depth Increment = ft

Stage - Storage Description	Stage (ft)	Optional Override Stage (ft)	Length (ft)	Width (ft)	Area (ft^2)	Optional Override Area (ft^2)	Area (acre)	Volume (ft^3)	Volume (ac-ft)
Top of Micropool	--	0.00	--	--	--	0	0.000		
6527	--	1.00	--	--	--	0	0.000	0	0.000
6528	--	2.00	--	--	--	96,675	2.219	48,334	1.110
6529	--	3.00	--	--	--	138,663	3.183	166,003	3.811
6530	--	4.00	--	--	--	202,601	4.651	336,635	7.728

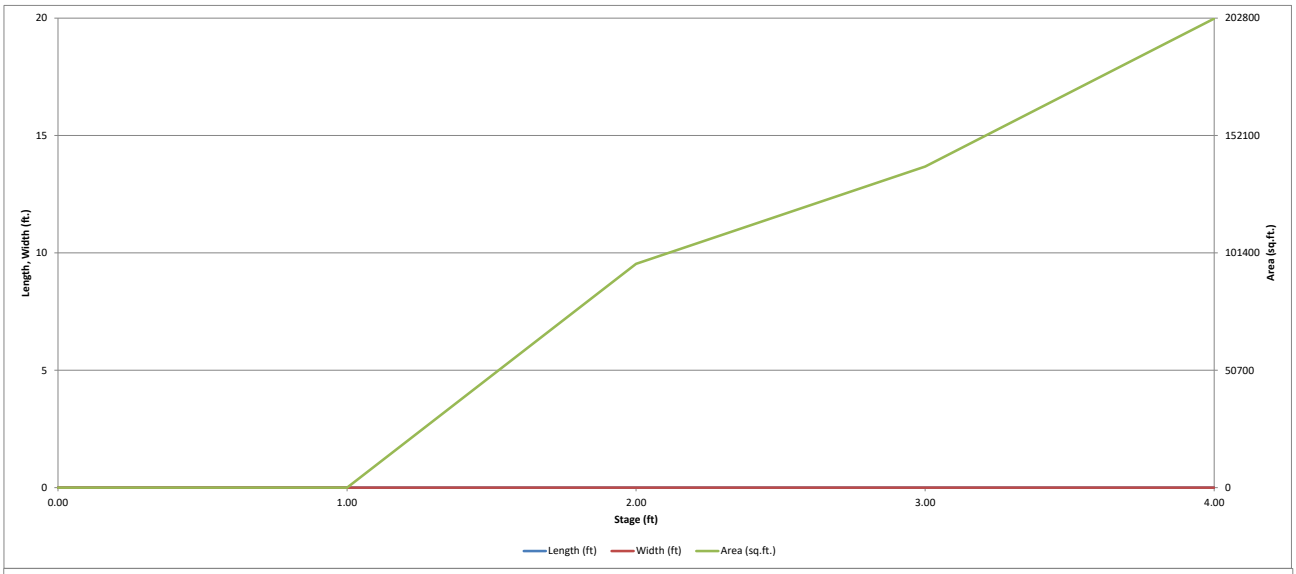
20
15
10
5
0
Length, Width (ft.)
202800
152100
101400
50700
0
Area (sq.ft.)
0.00
1.00
2.00
3.00
4.00
Stage (ft)
Length (ft)
Width (ft)
Area (sq.ft.)

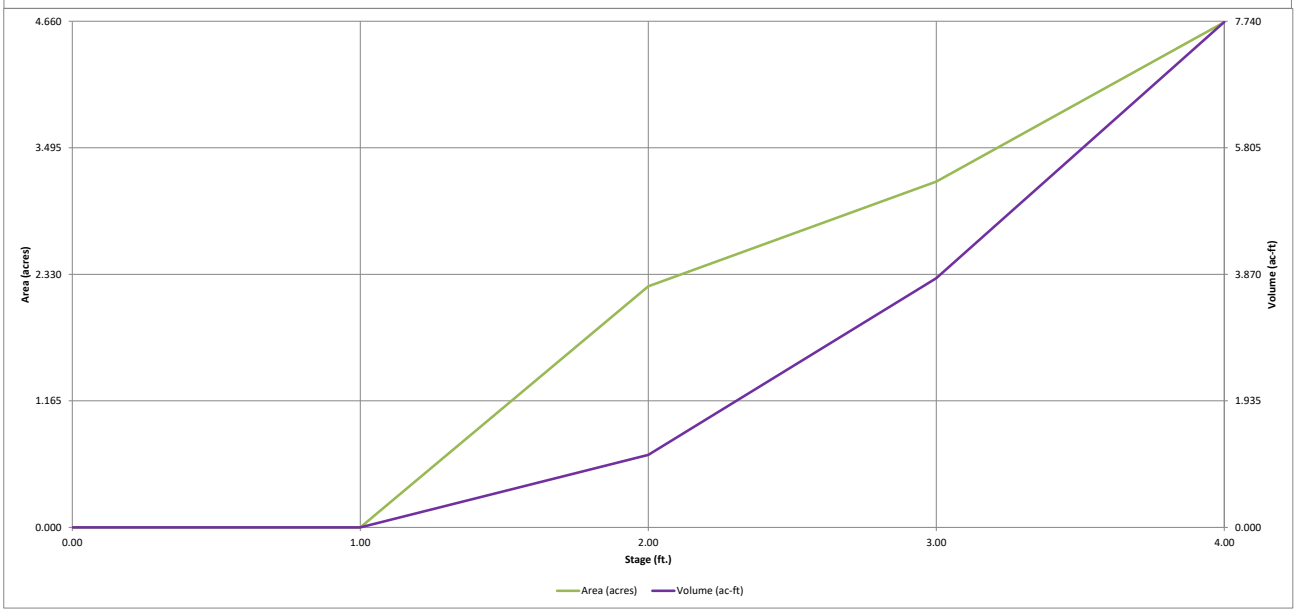
4.660
3.495
2.330
1.165
0.000
Area (acres)
7.740
5.805
3.870
1.935
0.000
Volume (ac-ft)
0.00
1.00
2.00
3.00
4.00
Stage (ft.)
Area (acres)
Volume (ac-ft)

DRAINAGE MAPS

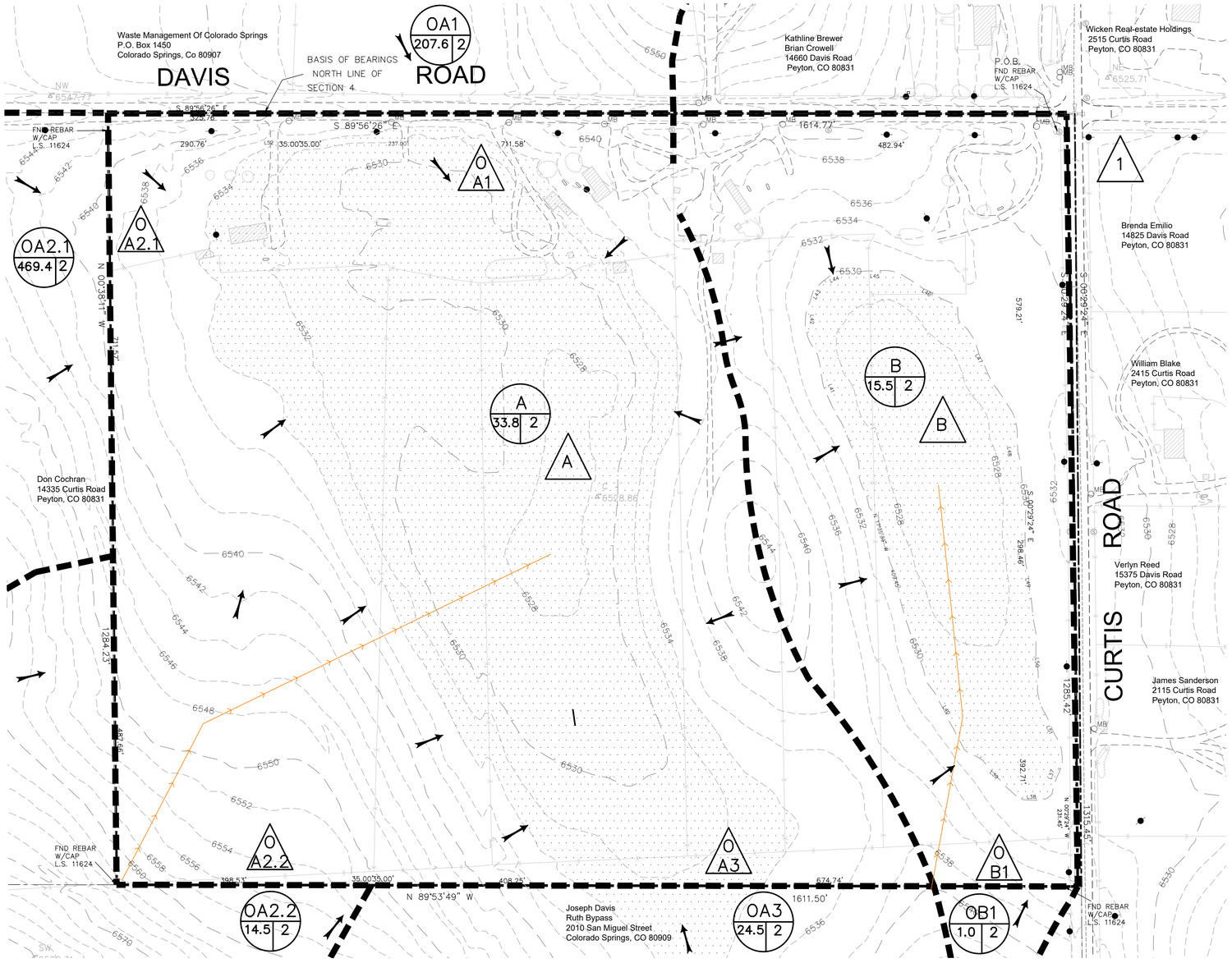

LEGEND:

- B / 1.1 / 77 — BASIN DESIGNATION; AREA IN BASIN (AC); % IMPERVIOUSNESS
- 2 — DESIGN POINT
- BASIN BOUNDARY
- A — PROPOSED CHANNEL
- PROPOSED RIPRAP
- 6490 — EXISTING CONTOURS
- DRAINAGE RETENTION AREAS
- FLOW DIRECTION
- EXISTING GRAVEL EDGE
- EXISTING FENCE
- EXISTING BOUNDARY LINES
- TIME OF CONCENTRATION PATH

DRAINAGE SUMMARY

BASIN NAME	AREA (ACRES)	FLOW 5 YR (cfs)	FLOW 100 YR (cfs)
OA1	207.6	0.9*	21.6
OA2.1	469.4	1.6*	39.3
OA2.2	14.5	2.5	15.8
OA3	24.4	4.2	26.9
OB1	1.0	0.3	1.9
A	33.8	7.3	47.9
B	15.5	2.9	18.8

*10 YEAR FLOW USED AS A CONSERVATIVE ESTIMATE FOR SCS HYDROGRAPH CALCULATIONS

DESIGN POINT SUMMARY

DP	CONTRIBUTING BASINS	AREA AC.	Q5 CFS	Q100 CFS
OA1	OA1	207.6	0.9*	21.6
OA2.1	OA2.1	469.4	1.6*	39.3
OA2.2	OA2.2	14.5	2.5	15.8
OA3	OA3	24.4	4.2	26.9
OB1	OB1	1.0	0.3	1.9
A	OA1, OA2.1, OA2.2, OA3, A	749.8	16.5	151.6
B	OB1, B	16.5	3.2	20.7
1	OA1, OA2.1, OA2.2, OA3, OB1, A, B	766.3	0	0

*10 YEAR FLOW USED AS A CONSERVATIVE ESTIMATE FOR SCS HYDROGRAPH CALCULATIONS

BENCHMARK

AN ALUMINUM CAP ON A ¾" X 30" REBAR 35.00 FEET FROM TRUE CORNER LOCATION. ELEV = 7386.46 (NAVD88)

LEGEND

- B / 1.1 / 77 — BASIN DESIGNATION; AREA IN BASIN (AC); % IMPERVIOUSNESS
- 2 — DESIGN POINT
- BASIN BOUNDARY

N

0 50' 100' 200'
SCALE: 1"= 100'

THIS DESIGN WAS PREPARED UNDER MY DIRECT SUPERVISION FOR AND ON BEHALF OF TERRA NOVA ENGINEERING, INC.

L DUCETT, P.E.
COLORADO P.E. NO. 32339

8/6/2023

REVISIONS		
NO.	DESCRIPTION	DATE

UNTIL SUCH TIME AS THESE DRAWINGS ARE APPROVED BY THE APPROPRIATE REVIEWING AGENCIES, TERRA NOVA ENGINEERING, INC. APPROVES THEIR USE FOR ONLY THOSE PURPOSES DESIGNATED BY WRITTEN AUTHORIZATION.

PREPARED FOR:
THOUSAND HILLS LAND & CATTLE CO
ATTN: RICHARD ELLIOTT
812 E MONUMENT STREET
COLORADO SPRINGS, CO 80903
(719) 238-4234

Terra Nova Engineering, Inc.
Creative Civil Engineering Solutions
721 S. 23RD ST
COLORADO SPRINGS, CO 80904
OFFICE: 719-635-6422
FAX: 719-635-6426
www.tneainc.com

FALCON ACRES
14655 DAVIS ROAD

EXISTING DRAINAGE PLAN

DESIGNED BY JF
DRAWN BY JF
CHECKED BY LD
H-SCALE AS NOTED
V-SCALE AS NOTED
JOB NO. 2142.00
DATE ISSUED 8/6/23
SHEET NO. 1 OF 2

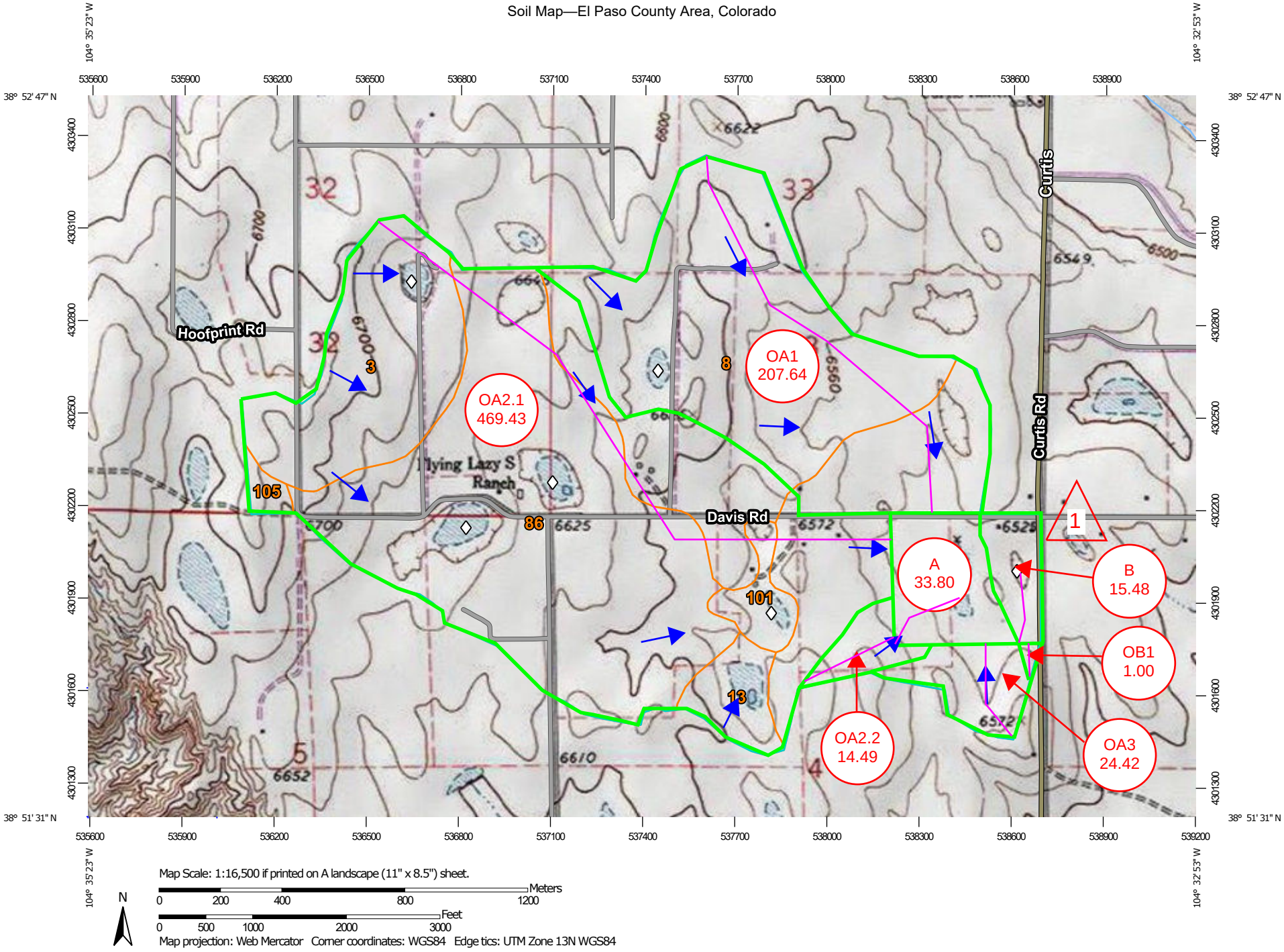

Map Scale: 1:16,500 if printed on A landscape (11" x 8.5") sheet.

N

Meters: 0 200 400 800 1200

Feet: 0 500 1000 2000 3000

Map projection: Web Mercator Corner coordinates: WGS84 Edge tics: UTM Zone 13N WGS84

MAP LEGEND

Area of Interest (AOI)

Area of Interest (AOI)

Soils

Soil Map Unit Polygons

Soil Map Unit Lines

Soil Map Unit Points

Special Point Features

Blowout

Borrow Pit

Clay Spot

Closed Depression

Gravel Pit

Gravelly Spot

Landfill

Lava Flow

Marsh or swamp

Mine or Quarry

Miscellaneous Water

Perennial Water

Rock Outcrop

Saline Spot

Sandy Spot

Severely Eroded Spot

Sinkhole

Slide or Slip

Sodic Spot

Spoil Area

Stony Spot

Very Stony Spot

Wet Spot

Other

Special Line Features

Water Features

Streams and Canals

Transportation

Rails

Interstate Highways

US Routes

Major Roads

Local Roads

Background

Topographic Map

Aerial Photography

MAP INFORMATION

The soil surveys that comprise your AOI were mapped at 1:24,000.

Please rely on the bar scale on each map sheet for map measurements.

Source of Map: Natural Resources Conservation Service
Web Soil Survey URL:
Coordinate System: Web Mercator (EPSG:3857)

Maps from the Web Soil Survey are based on the Web Mercator projection, which preserves direction and shape but distorts distance and area. A projection that preserves area, such as the Albers equal-area conic projection, should be used if more accurate calculations of distance or area are required.

This product is generated from the USDA-NRCS certified data as of the version date(s) listed below.

Soil Survey Area: El Paso County Area, Colorado
Survey Area Data: Version 19, Aug 31, 2021

Soil map units are labeled (as space allows) for map scales 1:50,000 or larger.

Date(s) aerial images were photographed: Sep 11, 2018—Oct 20, 2018

The orthophoto or other base map on which the soil lines were compiled and digitized probably differs from the background imagery displayed on these maps. As a result, some minor shifting of map unit boundaries may be evident.

Map Unit Legend

Map Unit Symbol	Map Unit Name	Acres in AOI	Percent of AOI
3	Ascalon sandy loam, 3 to 9 percent slopes	90.2	11.8%
8	Blakeland loamy sand, 1 to 9 percent slopes	214.3	28.0%
13	Bresser sandy loam, cool, 5 to 9 percent slopes	19.1	2.5%
86	Stoneham sandy loam, 3 to 8 percent slopes	249.6	32.6%
97	Truckton sandy loam, 3 to 9 percent slopes	174.3	22.8%
101	Ustic Torrifluvents, loamy	14.1	1.8%
105	Vona sandy loam, warm, 3 to 6 percent slopes	4.5	0.6%
Totals for Area of Interest		**766.3**	**100.0%**

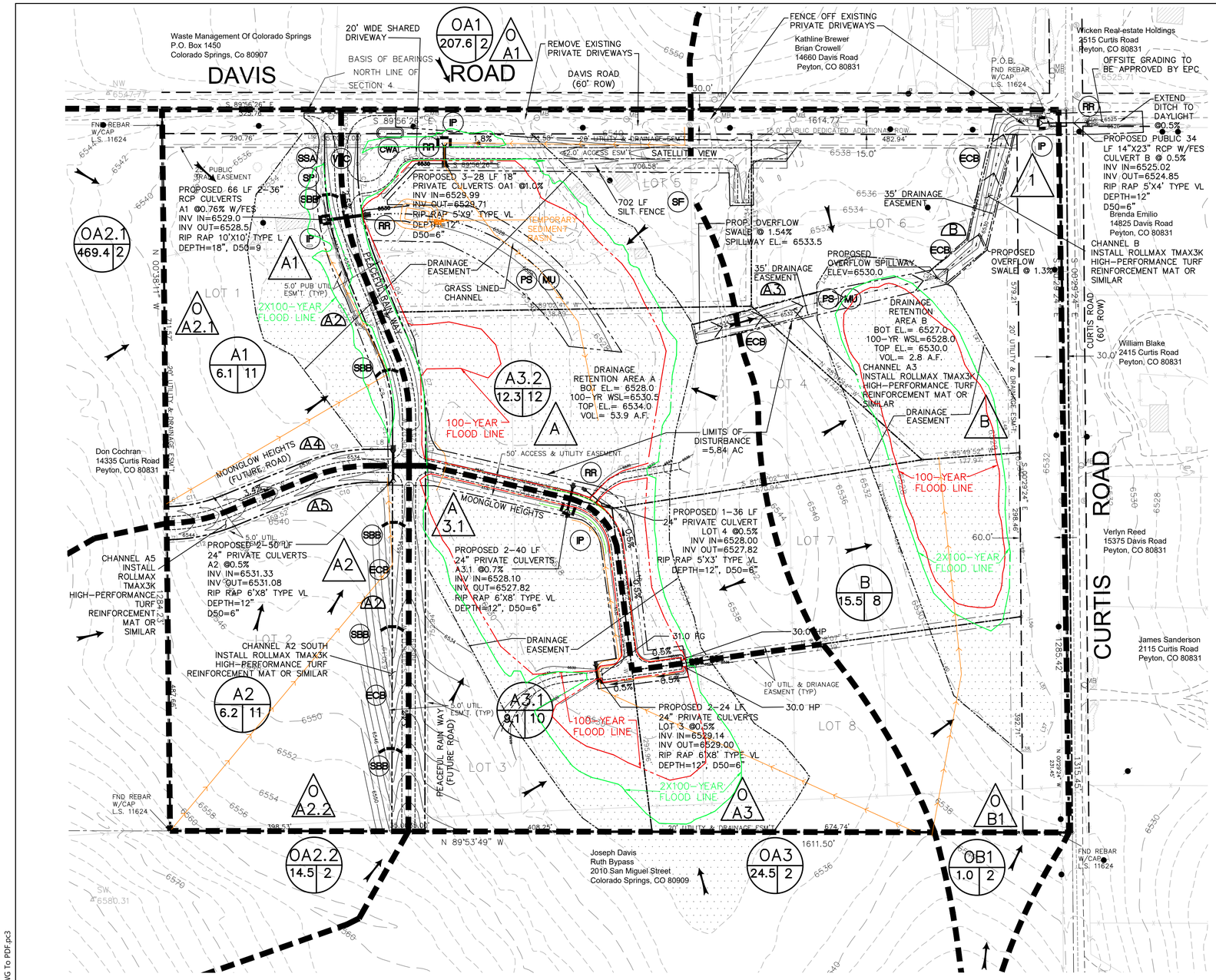

NOTES:

THE STUDY AREA CONSISTS OF A PASTURE/MEADOW AREA THAT HAS ABOUT 75% NATURAL VEGETATIVE COVER BASED ON A SITE VISIT, SPECIFICALLY UPLAND GRASSES AND WEEDS.

LEGEND:

- B / 1.1 / 77 — BASIN DESIGNATION; AREA IN BASIN (AC); % IMPERVIOUSNESS
- 2 — DESIGN POINT
- BASIN BOUNDARY
- A — PROPOSED CHANNEL
- PROPOSED RIPRAP
- 6490 — EXISTING CONTOURS
- 6490 — PROPOSED CONTOURS
- 99.00 — PROPOSED SPOT ELEVATION (FLOWLINE)
- DRAINAGE RETENTION AREAS
- FLOW DIRECTION
- PROPOSED BOUNDARY LINES
- PROPOSED GRAVEL EDGE
- PROPOSED EASEMENT
- EXISTING GRAVEL EDGE
- EXISTING FENCE
- EXISTING BOUNDARY LINES
- TIME OF CONCENTRATION PATH
- LIMITS OF CONSTRUCTION/DISTURBANCE

BENCHMARK

AN ALUMINUM CAP ON A ¾" X 30" REBAR 35.00 FEET FROM TRUE CORNER LOCATION. ELEV = 7386.46 (NAVD88)

DRAINAGE SUMMARY

*10 YEAR FLOW USED AS A CONSERVATIVE ESTIMATE FOR SCS HYDROGRAPH CALCULATIONS

BASIN NAME	AREA (ACRES)	FLOW 5 YR (cfs)	FLOW 100 YR (cfs)
OA1	207.6	0.9*	21.6
OA2.1	469.4	1.6*	39.3
OA2.2	14.5	2.5	15.8
OA3	24.4	4.2	26.9
OB1	1.0	0.3	1.9
A1	6.1	1.7	9.1
A2	6.2	1.9	10.4
A3.1	9.1	2.0	10.6
A3.2	12.3	3.5	19.2
B	15.5	5.2	26.6

DESIGN POINT SUMMARY

*10 YEAR FLOW USED AS A CONSERVATIVE ESTIMATE FOR SCS HYDROGRAPH CALCULATIONS

DP	CONTRIBUTING BASINS	AREA AC.	Q5 CFS	Q100 CFS
OA1	OA1	207.6	0.9*	21.6
OA2.1	OA2.1	469.4	1.6*	39.3
OA2.2	OA2.2	14.5	2.5	15.8
OA3	OA3	24.4	4.2	26.9
OB1	OB1	1.0	0.3	1.9
A1	A1, OA2.1, A2, OA2.2	496.2	7.7	74.6
A2	A2, OA2.2	20.7	4.4	26.2
A3.1	A3.1, OA3	33.56	6.2	37.5
A	OA1, OA2.1, OA2.2, OA3, A1, A2, A3.1, A3.2	749.8	18.3	153.0
B	B, OB1	16.5	5.5	28.5
1	OA1, OA2.1, OA2.2, OA3, OB1, A1, A2, A3.1, A3.2, B	766.3	0	0

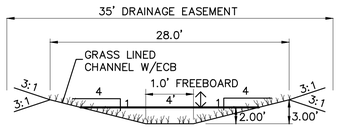

CHANNEL SECTION A3
SCALE : NTS
Q CAP MIN = 163.9 CFS
SLOPE = 1.54%
n VALUE = 0.030
DEPTH = 3.00'
VELOCITY = 6.83 FT/S

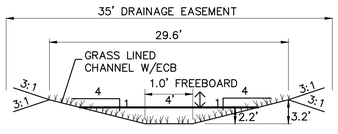

CHANNEL SECTION B
SCALE : NTS
Q CAP MIN = 186.7 CFS
SLOPE = 1.30%
n VALUE = 0.030
DEPTH = 3.2'
VELOCITY = 6.63 FT/S

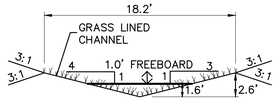

CHANNEL SECTION A2 NORTH
SCALE : NTS
Q CAP MIN = 26.2 CFS
SLOPE = 0.50%
n VALUE = 0.030
DEPTH = 2.60'
VELOCITY = 2.94 FT/S

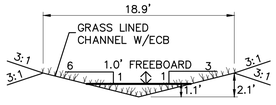

CHANNEL SECTION A2 SOUTH
SCALE : NTS
Q CAP MIN = 32.8 CFS
SLOPE = 3.40%
n VALUE = 0.030
DEPTH = 2.10'
VELOCITY = 6.02 FT/S

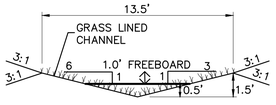

CHANNEL SECTION A4
SCALE : NTS
Q CAP MIN = 4.0 CFS
SLOPE = 3.40%
n VALUE = 0.030
DEPTH = 0.5'
VELOCITY = 3.56 FT/S

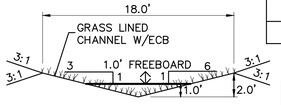

CHANNEL SECTION A5
SCALE : NTS
Q CAP MIN = 25.4 CFS
SLOPE = 3.40%
n VALUE = 0.030
DEPTH = 2.00'
VELOCITY = 5.65 FT/S

THIS DESIGN WAS PREPARED UNDER MY DIRECT SUPERVISION FOR AND ON BEHALF OF TERRA NOVA ENGINEERING, INC.

L DUCETT, P.E.
COLORADO P.E. NO. 32339
8/6/2023

REVISIONS

NO.	DESCRIPTION	DATE

UNTIL SUCH TIME AS THESE DRAWINGS ARE APPROVED BY THE APPROPRIATE REVIEWING AGENCIES, TERRA NOVA ENGINEERING, INC. APPROVES THEIR USE FOR ANY PURPOSE DESIGNATED BY WRITTEN AUTHORIZATION.

PREPARED FOR:
THOUSAND HILLS LAND & CATTLE CO
ATTN: RICHARD ELLIOTT
812 E MONUMENT STREET
COLORADO SPRINGS, CO 80903
(719) 238-4234

Terra Nova Engineering, Inc. "Creative Civil Engineering Solutions"
721 S. 23RD ST
COLORADO SPRINGS, CO 80904
OFFICE: 719-635-6422
FAX: 719-635-6426
www.tnesinc.com

FALCON ACRES
14655 DAVIS ROAD

PROPOSED DRAINAGE PLAN

DESIGNED BY JF
DRAWN BY JF
CHECKED BY LD
H-SCALE AS NOTED
V-SCALE AS NOTED
JOB NO. 2142.00
DATE ISSUED 8/6/23
SHEET NO. 2 OF 2