# STORMWATER MANAGEMENT PLAN (SWMP)

FOR

Project:

Overlook at Homestead Filing No. 1
El Paso County, CO

Permittee:

PT Overlook LLC
1864 Woodmoor Drive, Suite 100
Monument, Colorado 80132

Preparing Engineer:

Kimley-Horn and Associates, Inc.
2 North Nevada Avenue, Suite 900
Colorado Springs, CO 80903
Kevin Kofford, P.E.
(719) 453-0180

**QUALIFIED STORMWATER MANAGER**

Name:_____

Company:_____

Address:_____

**CONTRACTOR**

Name:_____

Company:_____

Address:_____

Project No.: SF2425

November 7, 2024

**DEVELOPER/OWNER'S STATEMENT** ..... **3**

**INTRODUCTION** ..... **4**

PERMIT COVERAGE AND APPLICATIONS ..... 4
GENERAL PROJECT DESCRIPTION ..... 4
PROJECT LOCATION ..... 4
VICINITY MAP ..... 4

**SITE CONDITIONS** ..... **5**

VEGETATION ..... 5
DRAINAGE CHARACTERISTICS ..... 5
ULITMATE DISCHARGE ..... 6
SOILS ..... 6
DEWATERING ..... 6

**AREAS & VOLUMES** ..... **7**

**EROSION & SEDIMENT CONTROL MEASURES** ..... **7**

**TIMING & SCHEDULE** ..... **8**

**STORMWATER MANAGEMENT CONTROLS** ..... **11**

QUALITIFIED STORMWATER MANAGER ..... 11
SITE SPECIFIC POLLUTION SOURCES ..... 11
IDENTIFICATION OF POLLUTANT SOURCES ..... 11
BEST MANAGEMENT PRACTICES FOR STORMWATER POLLUTION PREVENTION ..... 13

**STABILIZATION AND STORMWATER MANAGEMENT** ..... **17**

TEMPORARY STABILIZATION AND SHORT-TERM STORMWATER MANAGEMENT ..... 17
FINAL STABILIZATION AND LONG-TERM STORMWATER MANAGEMENT ..... 17

**INSPECTION AND MAINTENANCE** ..... **17**

INSPECTION SCHEDULE REQUIREMENTS ..... 17
INSPECTION PROCEDURES ..... 18
CONTROL MEASURE MAINTENANCE / REPLACEMENT AND FAILED CONTROL MEASURES ..... 20
DISPOSITION OF TEMPORARY MEASURES ..... 20
PLAN MODIFICATIONS ..... 20

**REFERENCES** ..... **21**

**APPENDIX A – STORMWATER MANAGEMENT PLANS / SITE MAPS**
**APPENDIX B – CDPHE STOMWATER PERMIT**
**APPENDIX C – FEMA FIRM MAP**
**APPENDIX D – SOILS INFORMATION**
**APPENDIX E – IDENTIFICATION OF POLLUTANT SOURCES**
**APPENDIX F – LAND DISTURBANCE / CONTROL MEASURE / STABILIZATION LOG**
**APPENDIX G – CDPHE ENVIRONMENTAL SPILL REPORTING / CONTROL MEASURE**
**APPENDIX H – STORM EVENT LOG**
**APPENDIX I – INSPECTION AND SAMPLING REPORTS**
**APPENDIX J – SWMP AMENDMENT LOG**

## DEVELOPER/OWNER'S STATEMENT

"The owner will comply with the requirements of the Erosion and Stormwater Quality Control Plan including temporary BMP inspection requirements and final stabilization requirements. I acknowledge the responsibility to determine whether the construction activities on these plans require Colorado Discharge Permit System (CDPS) permitting for Stormwater discharges associated with Construction Activity."

Developer/Owner Signature:_____

Name of Developer/Owner:_____Date: _____

DBA:_____Phone:_____

Title:_____Email:_____

Address:1864 Woodmoor Drive, Suite 100 Monument, CO 80132 Fax:_____

## ENGINEER'S STATEMENT

"This Erosion and Stormwater Quality Control/Grading Plan was prepared under my direction and supervision and is correct to the best of my knowledge and belief. If such work is performed in accordance with the grading and erosion control plan, the work will not become a hazard to life and limb, endanger property, or adversely affect the safety, use, or stability of a public way, drainage channel, or other property."

Signature:_____ Date:_____

Printed Name: Kevin Kofford, P.E.

# INTRODUCTION

The purpose of this report is to outline the SWMP plan for the Overlook at Homestead, Filing No. 1 single-family development (herein the "Project"), located within the jurisdictional limits of El Paso County ("the County").

## PERMIT COVERAGE AND APPLICATIONS

Based upon a Site Disturbance Area of one (1) acre or more, this Site requires the approval of this Stormwater Management Plan and a Grading and Erosion Control Plan with the County and the issuance of a Colorado Discharge Permit System (CDPS) - Stormwater Discharge Associated with Construction Activities Application (the General Permit) through the Colorado Department of Public Health and Environment (CDPHE).

The primary goal of pollution prevention efforts during Project construction is to control sediment and pollutants that originate on the site and prevent them from flowing to surface waters. A successful pollution prevention program also relies upon careful inspection and adjustments during the construction process to enhance its effectiveness. It is the intent of this plan to implement stormwater control measures, also referred to as best management practices (BMP) for enhancing the quality of stormwater discharges associated with the construction activity. Control measures designs are based on the criteria set forth by the General Permit, the Urban Storm Drainage Criteria Manual, Volume 3, El Paso County Drainage Criteria Manual Vol. 2 ("DCM") and the El Paso County Engineering Criteria Manual ("ECM"). This plan must be implemented before construction begins on the site. It primarily addresses the impact of storm rainfall and runoff on areas of the ground surface disturbed during the construction process. In addition, there are recommendations for controlling other sources of pollution that could accompany the major construction activities. Applicability of this plan shall be terminated when disturbed areas are stabilized, temporary erosion controls are removed, construction activities covered herein have ceased and the permit has been inactivated.

# SITE DESCRIPTION

## GENERAL PROJECT DESCRIPTION

The property is planned to be developed as two separate filings. Filing No. 1 is approximately 202.7 acres and three full spectrum detention ponds on the southern part of the Site. This report covers just the 202.7 acres as part of Filing No. 1.The full development of this site will consist of 62, five (5) acre residential lots with roadway improvements, roadway grading, six full spectrum detention ponds, roadside ditches, culverts, and drainage swales.

## PROJECT LOCATION

The Project Site located east of Elbert Road within El Paso County, Colorado including parcels 4122000005, 4100000255, 4100000256. More specifically, the site is a Portion of Section 22 and a Portion of Section 27, Township 11 South, Range 64 West of the 6$^{th}$ PM, County of El Paso, State of Colorado. North of the project site is agricultural and rural residential land, to the east is Homestead Ranch Park owned and maintained by El Paso County, and to the south and west is Homestead Ranch subdivisions.

### VICINITY MAP

A vicinity map is provided below for reference:

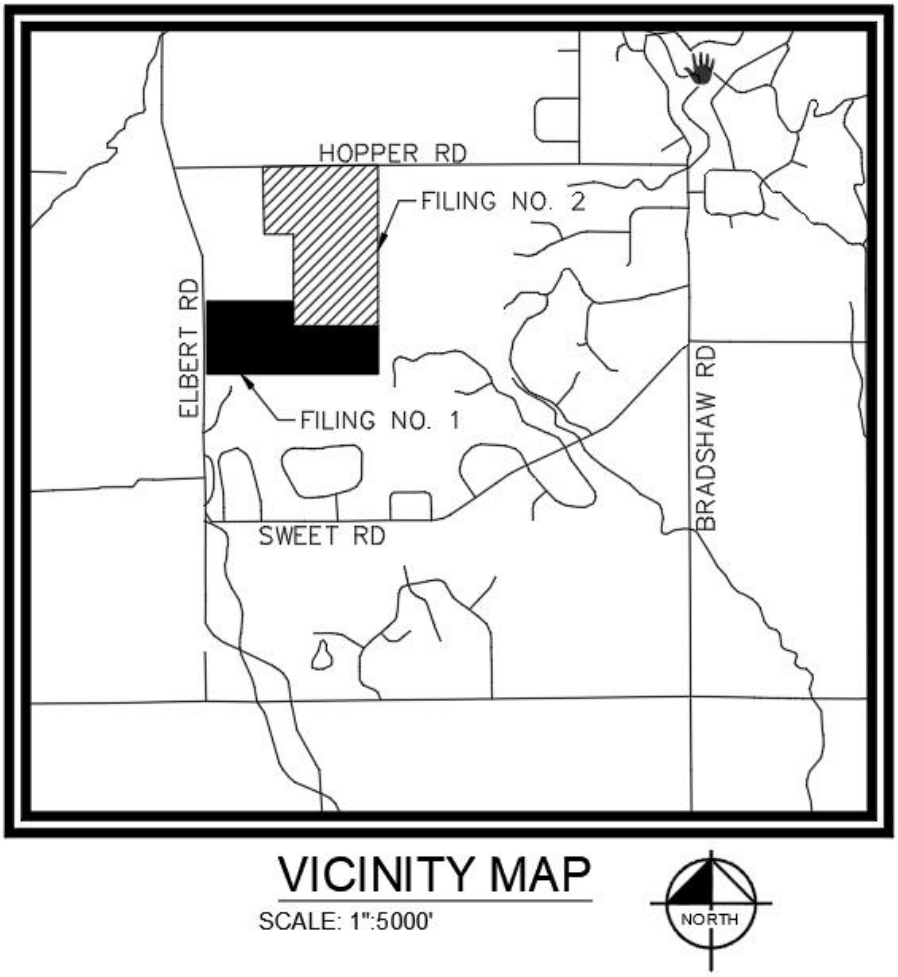


VICINITY MAP

SCALE: 1":5000'

## SITE CONDITIONS

### VEGETATION

The existing Site is currently undeveloped with onsite conditions consisting of 90% native grasses and other native seedings based on visual inspection from Site visits on the property. Existing trees are present throughout the property.

### DRAINAGE CHARACTERISTICS

The existing topography consists of slopes ranging from 1% to 33% with an existing butte covering much of the northern portion of the Site. Flows in the existing conditions run off site into one of four

major drainage basins with several natural drainage channels scattered throughout the site. There are no stream crossings in the area. This historic runoff pattern will generally be maintained and unaffected with the proposed Project. The 5-year and 100-year design storm events were used in determining rainfall and runoff for the proposed drainage system per chapter 6 of the El Paso County Drainage Criteria. Table 6-2 of the El Paso County Drainage Criteria is the source for rainfall data for the 5-year and 100-year design storm events. Design runoff was calculated using the Rational Method for developed conditions as established in the El Paso County Drainage Criteria Manual and the Mile-High Flood District Manual. Runoff coefficients for the proposed development were determined using Table 6-6 of the El Paso County Drainage Manual by calculating weighted impervious values for each specific site basin. The detention storage requirement was calculated using Full Spectrum Detention methods as specified in the El Paso County Drainage Criteria Manual and the Mile-High Flood District Manual. The detention basin's outlet structure was designed to release the Water Quality Capture Volume (WQCV) in 40 hours. Based upon this approach, we feel that the drainage design provided for the Site is conservative and in keeping with the zoning and historic drainage concept for the area.

Water quality treatment for Filing No. 1 will be provided by three proposed stormwater facilities. All three full spectrum extended detention basins are located along the southern portion of the site. The controlled 5-year and 100-year release from the detention basin outlet structures will eventually outfall to existing drainageways downstream.

The Site is located outside the 100-year floodplain and within Zone X (an area of minimal flood hazard) as noted on the FEMA FIRM Map No. 08041C0350G revised on December 7, 2018 (See **Appendix**).

## ULITMATE DISCHARGE

The site will ultimately discharge into one of four separate drainage basins. Upper Black Squirrel Drainage Basin, La Lega Range Drainage Basin, East Kiowa Creek Drainage Basin, Bijou Creek Drainage Basin.

## SOILS

According to NRCS soil mapping data, USCS Type B soils are the primary soil type within the site. Type B soils having a moderate infiltration rate when thoroughly wet. These consist chiefly of moderately deep or deep, moderately well drained, or well drained soils that have moderately fine texture to moderately coarse texture. These soils have a moderate rate of water transmission. Soils mapping information has been provided in the Appendix.

## DEWATERING

As per the Geotechnical Engineering Report by Entech dated 08/02/2023. Signs of seasonal groundwater were encountered in seven of the fourteen test pits at depths ranging from 3 to 8 feet. A minimum separation of 4 feet between the OWTS field and groundwater levels is recommended. Fluctuation in groundwater conditions may occur due to variations in rainfall and other factors not readily apparent at this time. It should be noted that in the sandy materials on-site, some groundwater conditions might be encountered due to the variability in the soil profile. Isolated sand and gravel layers within the soils, sometimes only a few feet in thickness and width, can carry water in the subsurface. Groundwater may also flow on top of the underlying bedrock. Builders and planners should be cognizant of the potential for the occurrence of such subsurface water features during construction on-site and deal with each individual problem as necessary at the time of construction.

## AREAS & VOLUMES

The total Site area is 202.7 acres with a total anticipated Project disturbance area for Filing No.1 is approximately 31.52 acres, with 30.94 acres of disturbance onsite and 0.58 acres of disturbance off-site. The estimated earthwork quantities are as follows:

Cut: ±113,665 cubic yards
Fill: ±119,980 cubic yards
Net: ±6,315 cubic yards (FILL)
*No Fill Factor

## EROSION & SEDIMENT CONTROL MEASURES

Construction operations including grading, hauling of soil, drainage, pavement work, and final stabilization shall implement erosion and sediment control measures as described below and in the Timing section of this report. Additional measures shall be implemented as appropriate.

Erosion and sediment control measures shall be implemented during construction of the Project. Two construction entrances with vehicle tracking control (VTC) shall be implemented to reduce off-site sediment tracking. The entrances will be located on at the intersection of the existing Elbert Road and the proposed Hatband Drive. The second VTC will be at the beginning of the proposed Apex Ranch Road. Temporary Soil Stockpiles (SP) shall be protected from stormwater using Sediment Control Logs (SCL) or other perimeter control such as Silt Fence (SF) to inhibit soil transport as well as at material storage areas. SCLs will also be used for perimeter control. A Concrete Washout Area (CWA) shall be placed near the entrances to the site. In addition to those measures noted above, Portable Toilets will also be utilized on Site. Portable toilets shall be located on flat surfaces away from drainage paths, tied-down or staked-down, emptied regularly, and where possible secondary containment pans shall be provided under the portable toilets. Please see the Grading and Erosion Control Plans for locations and sizing of recommended erosion control measures.

All persons engaged in earth disturbances shall design, implement, and maintain acceptable soil erosion and sedimentation control measures in conformance with the erosion and sediment control technical standards adopted by the County. All temporary erosion and sediment control facilities, and all permanent facilities intended to control erosion of any earth disturbance operation shall be installed before any earth disturbance operations take place. Any earth disturbances shall be conducted in such a manner to effectively control runoff volumes, reduce accelerated soil erosion, sediment movement, and deposition off-site. All earth disturbances shall be completed in such a manner so that the total amount of soil exposed at any given time shall be minimized, and the exposed area of any disturbed land shall be limited to the shortest possible period of time. Temporary soil erosion control facilities shall be removed, and earth disturbance areas graded and stabilized with permanent soil erosion control measures pursuant to approved plans and specifications.

Permanent soil erosion control measures for all slopes, channels, ditches, or any disturbed land area shall be completed within fourteen (14) calendar days after final grading or the final earth disturbances have been completed. When it is not possible to permanently stabilize a disturbed area after an earth disturbance has been completed or where significant earth disturbance activity ceases, temporary soil erosion control measures shall be implemented within fourteen (14) calendar days. All temporary soil erosion control measures shall be maintained until final stabilization has been achieved.

Paved and impervious surfaces which are adjacent to construction sites must be swept on a daily basis and as needed during the day when sediment and other materials are tracked or discharged onto them.

Either sweeping by hand or use of street sweepers is acceptable. Street sweepers using water while sweeping is preferred in order to minimize dust. Flushing off paved surfaces with water is prohibited.

All construction site operators shall control waste such as discarded building materials, hazardous chemicals (to include but not be limited to, heavy equipment maintenance fluids, motor oil, antifreeze and secondary containment of vehicle fuel), litter, and sanitary waste at the construction Site that may cause adverse impacts to water quality. Chemicals, paints, solvents, fertilizers, and other toxic materials must be stored in weatherproof containers. Except during application, the contents must be kept in trucks or within storage facilities. Runoff containing such material must be collected, removed from the Site, treated, and disposed at an approved solid waste or chemical disposal facility. On-site fueling is not expected with this Project.

Throughout build-out, the developer shall be responsible for implementing and maintaining Best Management Practices (BMPs) to control erosion and sediment problems on all idle lots.

All stockpiles shall require erosion and sediment control. All stockpiles shall:

- Not be located adjacent to a waterway.
- Be stabilized within 14 days after establishment. Stabilization shall include, but not be limited to, surface roughening, seeding, and mulching.
- Not exceed 10 feet in height.
- Utilize silt fence in all down slope sides of the stockpile.

## TIMING & SCHEDULE

The proposed project will begin in Fall 2024 to Fall 2025 with an anticipated final stabilization of Summer 2026. The general sequence of the phasing of the related construction activities will occur according to the following anticipated sequence:

*Project sequence:*

Phased BMP Implementation – Initial Phase **(Pre-Development Grading and Erosion Control Permit)**

The initial phase shall consist of the temporary construction BMPs to minimize potential for erosion and sediment transfer while mobilizing and preparing the Site for construction activities. The operator shall complete the anticipated initial phase sequencing as follows:

1. Prepare and submit the state of Colorado, Colorado department of public health and environment (CDPHE) application. A copy of the permit shall be provided to the owner upon receipt from the CDPHE.

2. Install SWMP information sign (S) in accordance with applicable city, state, and owner requirements.

3. Ensure that general construction BMPs which are required throughout the Project at locations shown on the GEC plans or as dictated by construction activities are operational.

4. Install perimeter controls and ensure that the limits of construction (LOC) are defined as necessary or known by all parties which will be responsible for construction on the Site.

5. Install stabilized vehicle tracking control pads (VTC) as indicated on the GEC plans.

6. Construct required stabilized staging area (SSA).

7. Install silt fence (SF) as shown on the GEC plans.

8. Install Temporary Sediment Basins (SB) per details on GEC plans.

9. Upon completion of the initial BMP installation the operator shall schedule a pre-construction meeting with the owner and the County erosion control inspector to confirm BMPs installed are adequate prior to proceeding with additional land disturbing activities.

10. Complete clearing and grubbing of the Site as necessary to proceed with initial grading operations. Stockpile materials in accordance with the stockpile management (SP) BMP.

Phased BMP Implementation - Interim Phase **(Pre-Development Grading and Erosion Control Permit)**

The Interim phase shall consist of the temporary construction BMPs to minimize potential for erosion and sediment transfer during the construction of the proposed roadways and associated limited site improvements. The operator shall complete the anticipated Interim phase sequencing as follows:

1. Confirm existing BMPs from the initial phase, which are to be maintained throughout construction, are in working order and compliant with applicable regulations.

2. Repair and/or replace any existing BMPs which are deemed inadequate.

3. Complete required temporary grading operations necessary for construction. Conduct excavation as needed for the underground utilities. Stockpile materials in accordance with the stockpile management (SP) BMP.

4. Temporary stabilize (TS) all areas of the Site which will remain inactive for a period greater than 30 days. Temporary stabilization shall be implemented within 14 days of disturbance.

5. Install concrete washout area (CWA) prior to construction of concrete improvements.

6. Complete required grading operations necessary for construction of the proposed commercial building and associated site and utility improvements. Stockpile materials in accordance with the stockpile management (SP) BMP.

7. **Subgrade undercut grading only during the Pre-development Phase. Asphalt and base course shall not be constructed with this Pre-development Phase.**

8. Construct underground dry utilities.

9. Install Inlet Protection (IP) around the upstream and downstream side of each installed culvert.

10. Complete fine grading and proceed with temporary stabilization (TS) and permanent stabilization (PS) practices in accordance with approved landscape plans.

Phased BMP Implementation - Final Phase

The Final phase shall consist of the temporary construction BMPs to minimize potential for erosion and sediment transfer during the construction of the proposed paving and associated limited site improvements to achieve final stabilization:

1. Confirm existing BMPs from the initial phase, which are to be maintained throughout construction, are in working order and compliant with applicable regulations.

2. Repair and/or replace any existing BMPs which are deemed inadequate.

3. Complete required temporary grading operations necessary for construction. Conduct excavation as needed for the underground utilities. Stockpile materials in accordance with the stockpile management (SP) BMP.

4. Temporary stabilize (TS) all areas of the Site which will remain inactive for a period greater than 30 days. Temporary stabilization shall be implemented within 14 days of disturbance

5. Add base course and commence roadway paving.

6. Construction of permanent Private Full Spectrum Extended Detention Facilities (Pond 5). (The Full Spectrum Extended Detention Facilities cannot be constructed as part of the early grading permit)

7. Achieve permanent stabilization in accordance with El Paso County, CDPHE and owner requirements.

8. Remove remaining BMPs once permanent stabilization (PS) has been achieved. Repair and stabilize areas disturbed through BMP removal.

9. Notify the owner of intent to file the notice of inactivation with the EL PASO COUNTY and CDPHE and receive owner acceptance to proceed with stormwater management close-out.

10. Notify the EL PASO COUNTY of the intent to file the notice of inactivation and receive EL PASO COUNTY field acceptance prior to proceeding with filing the notice of inactivation with the EL PASO COUNTY.

11. Proceed with filing the notice of inactivation with the EL PASO COUNTY and CDPHE.

12. Provide the owner with a copy of all stormwater documentation (permits, inspection reports, logs, etc.). Upon completion of Project, file the notice of inactivation.

# STORMWATER MANAGEMENT CONTROLS

## QUALITIFIED STORMWATER MANAGER

The Qualified Stormwater Manager is the Operator selected for the project. The Qualified Stormwater Manager is an individual knowledgeable in the principles and practices of erosion and sediment control and pollution prevention, and with the skills to assess the effectiveness of stormwater controls implemented to meet the requirements of the General Permit. The Qualified Stormwater Manager will be sufficiently qualified for the required duties per the ECM Appendix 1.5. The Qualified Stormwater Manager is responsible for developing, implementing, maintaining and revising the Grading, Erosion and Sediment Control Plan. The activities and responsibilities of the Qualified Stormwater Manager shall address all aspects of the facility's Grading, Erosion and Sediment Control Plan.

Company:
Contact:
Address:
Phone:
Email:

## SITE SPECIFIC POLLUTION SOURCES

Further identification of site-specific pollutants that fall within the categories outlined in the next section may be field noted using the corresponding log included in the appendices of this report. The logs are intended to record site-specific pollutants, the date of arrival on the Site, the date removed from the Site, and the methods of treatment.

## IDENTIFICATION OF POLLUTANT SOURCES

Evaluation of general sediment and non-sediment pollution sources associated with Site construction activities, as outlined within the General Permit, consist of the following:

- **Disturbed and Stored Soils** – Earth disturbing activities (grading, excavation, etc.) will be necessary for this Project; therefore, the potential exists for disturbed site soils to contribute sediment to stormwater discharges.
- **Vehicle Tracking and Sediment** – Construction traffic will be entering and exiting the Site; therefore, the potential exists for vehicle tracking to contribute sediment to stormwater discharges.
- **Management of Contaminated Soils** – Contaminated soils are not anticipated on this Site. If encountered, the SWMP Administrator shall take appropriate containment and treatment measures.
- **Loading and Unloading Operations** – Loading and unloading operations will be taking place at the Site; therefore, the potential exists for these operations to introduce sediment and non-sediment pollutants to stormwater discharges.
- **Outdoor Storage of Materials** – Limited outdoor storage of materials is anticipated with construction of this Site; however, outdoor storage of chemicals, fertilizers, etc. is not anticipated.
- **Vehicle and Equipment Maintenance and Fueling** – Routine maintenance and fueling of vehicles and equipment is anticipated with this Site; therefore, the potential exists for pollutants associated with these activities to contribute pollutants to stormwater discharges.

- **Significant Dust or Particulate Generating Processes** – Earth disturbing activities (grading, excavation, etc.) will be necessary for this Project; therefore, the potential exists for windblown site soils to contribute sediment to stormwater discharges.
- **Routine Maintenance** – Routine maintenance involving fertilizers, pesticides, detergents, fuels, solvents, oils, etc., other than those identified within Vehicle and Equipment Maintenance and Fueling are not anticipated with this Project. If encountered, the SWMP Administrator shall take appropriate containment and treatment measures.
- **Onsite Waste Management** – Waste management consisting of solid waste piles, liquid wastes, dumpsters, etc. are anticipated onsite; therefore, the potential exists for these operations to introduce sediment and non-sediment pollutants to stormwater discharges.
- **Concrete Truck / Equipment Washing** – Concrete truck and equipment washing are anticipated with this Project. The SWMP Administrator shall take appropriate containment and treatment measures.
- **Dedicated Asphalt and Concrete Batch Plants** – Dedicated asphalt and/or concrete batch plants are not anticipated with this Project. If encountered, the SWMP Administrator shall take appropriate containment and treatment measures and document as necessary.
- **Non-Industrial Waste Sources** – Non-Industrial waste sources limited to portable sanitary facilities are anticipated with this Project.
- **Additional Pollutant Sources** – Additional areas or procedures where potential spills could occur are not anticipated with this Project.

Logs for the identification of pollutant sources are included in the Appendices for reference and use.

Based on the following, the potential to contribute pollutants to stormwater discharges is not significant for most of the pollutants identified above:

- Relatively Low Frequency of the Activities
- The Ability to Schedule Activities During Dry Weather
- Existing Site Topography
- The Ability to Implement Primary and Secondary Containment for Product Storage
- The Ability to Locate Activities Away from Drainage Ways

Potential pollutant sources noted below shall be mitigated by use of Best Management Practices (BMPs) as noted in the following sections:

- Disturbed and Stored Soils
- Vehicle Tracking and Sediment
- Loading and Unloading Operations
- Outdoor Storage
- Vehicle Equipment and Maintenance Fueling
- Significant Dust or Particulate Generating Processes
- Non-Industrial Waste Sources

## BEST MANAGEMENT PRACTICES FOR STORMWATER POLLUTION PREVENTION

Structural Practices for Erosion and Sediment Control

Structural BMPs shall be implemented onsite to minimize erosion and sediment transport. Recommended BMPs based upon a limited site review may be seen within the SWMP Site Map included in the Appendices of this report. Additional BMPs shall be implemented by the SWMP Administrator if necessary to prevent sediment-laden runoff from leaving the Project Site. The SWMP shall be updated to reflect any changes or revisions enacted in the field. Temporary Structural BMPs for this Site consist of:

- Silt Fence (SF): A silt fence is a woven geotextile fabric attached to wooden posts and trenched into the ground. It is designed as a sediment barrier to intercept sheet flow runoff from disturbed areas.
- Check Dams/Erosion Bales (CD): Check dams are temporary grade control structures placed in drainage channels to limit the erosivity of stormwater by reducing flow velocity. Sediment control logs may also be used as check dams
- Vehicle Tracking Control (VTC): Vehicle tracking controls provide stabilized construction site access where vehicles exit the site onto paved public roads. An effective vehicle tracking control helps remove sediment (mud or dirt) from vehicles, reducing tracking onto the paved surface.
- Sediment Control Logs (SCL): A sediment control log is a linear roll made of natural materials such as straw, coconut fiber, or compost. The most common type of sediment control log has straw filling and is often referred to as a "straw wattle." All sediment control logs are used as a sediment barrier to intercept sheet flow runoff from disturbed areas.
- Erosion Control Blanket (ECB): A temporary degradable rolled erosion control product composed of processed natural or polymer fibers which are mechanically, structurally or chemically bound together to form a continuous matrix to provide erosion control and facilitate vegetation establishment. ECBs can be further differentiated into rapidly degrading single-net and double-net types or slowly degrading types.
- Temporary Sediment Basins (SB): A sediment basin is a temporary pond built on a construction site to capture eroded or disturbed soil transported in storm runoff prior to discharge from the site. Sediment basins are designed to capture site runoff and slowly release it to allow time for settling of sediment prior to discharge
- Inlet Protection (IP): Inlet protection consists of permeable barriers installed around an inlet to filter runoff and remove sediment prior to entering a storm drain inlet. Inlet protection can be constructed from rock socks, sediment control logs, silt fence, block and rock socks, or other materials

Permanent Structural BMPs for this Site consist of:

- Full Spectrum Extended Detention Basins (EDB) (3)

Non-Structural Practices for Erosion and Sediment Control

Non-Structural BMPs shall be implemented onsite to minimize erosion and sediment transport. Recommended BMPs based upon a limited site review may be seen within the SWMP Site Map included in the Appendices of this report. Additional BMPs shall be implemented by the SWMP Administrator if necessary to prevent sediment-laden runoff from leaving the Project Site. The SWMP shall be updated to reflect any changes or revisions enacted in the field. Non- Structural BMPs for this Site consist of:

- Temporary Seeding and Mulching (SM): Temporary seeding can be used to stabilize disturbed areas that will be inactive for an extended period. provide temporary vegetative cover on disturbed areas which will not be paved, built upon, or fully landscaped or worked for an extended period (typically 30 days or more), plant an annual grass appropriate for the time of planting and mulch the planted areas
- Permanent Seeding and Mulching (SM): To provide vegetative cover on disturbed areas that have reached final grade, a perennial grass mix should be established. Permanent seeding should be performed promptly (typically within 14 days) after reaching final grade.
- Good Housekeeping (Multiple Practices): Implement construction site good housekeeping practices to prevent pollution associated with solid, liquid and hazardous construction-related materials and wastes. Stormwater Management Plans (SWMPs) should clearly specify BMPs including these good housekeeping practices: 1. Provide for waste management. 2. Establish proper building material staging areas. 3. Designate paint and concrete washout areas. 4. Establish proper equipment/vehicle fueling and maintenance practices. 5. Control equipment/vehicle washing and allowable nonstormwater discharges. 6. Develop a spill prevention and response plan.
- Stabilized Staging and Storage Area (SSA): A stabilized staging area is a clearly designated area where construction equipment and vehicles, stockpiles, waste bins, and other construction-related materials are stored. The contractor office trailer may also be located in this area.
- Concrete Washout Area (CWA): Concrete waste management involves designating and properly managing a specific area of the construction site as a concrete washout area. A concrete washout area can be created using one of several approaches designed to receive wash water from washing of tools and concrete mixer chutes, liquid concrete waste from dump trucks, mobile batch mixers, or pump trucks.
- Stockpile Management (SP): Stockpile management includes measures to minimize erosion and sediment transport from soil stockpiles.

Phased BMP Implementation

Construction of the identified improvements will take place under three main phases of construction anticipated as identified within the construction sequencing included within this report.

A Land Disturbance, BMP Installation, and Stabilization Log is provided in the Appendices and shall be filled out accordingly during BMP implementation.

Materials Handling and Spill Prevention

Any hazardous or potentially hazardous material that is brought onto the construction Site shall be handled properly in order to reduce the potential for stormwater pollution. In an effort to minimize the potential for a spill of petroleum product or hazardous materials to come in contact with stormwater, the following steps shall be implemented:

- Material Safety Data Sheets (MSDS) information shall be kept on Site for any and all applicable materials.
- All materials with hazardous properties (such as pesticides, petroleum products, fertilizers, detergents, construction chemicals, acids, paints, paint solvents, additives for soil stabilization, concrete, curing compounds and additives, etc.) shall be stored in a secure location, under cover and in appropriate, tightly sealed containers when not in use.
- The minimum practical quantity of all such materials shall be kept on the job Site and scheduled for delivery as close to time of use as practical.

- A spill control and containment kit (containing, for example, absorbent material, acid neutralizing agent, brooms, dust pans, mops, rags, gloves, goggles, plastic and metal trash containers, etc.) shall be provided on the construction Site and location(s) shown on Site Maps.
- All of the product in a container shall be used before the container is disposed of. All such containers shall be triple rinsed, with water prior to disposal. The rinse water used in these containers shall be disposed of in a manner in compliance with State and Federal regulations and shall not be allowed to mix with stormwater discharges.
- All products shall be stored in and used from the original container with the original product label and used in strict compliance with the instructions on the product label.
- The disposal of excess or used products shall be in strict compliance with instructions on the product label.

Temporary onsite fuel tanks for construction vehicles shall meet all state and federal regulations. Tanks shall have approved spill containment with the capacity required by the applicable regulations. From NFPA 30: All tanks shall be provided with secondary containment (i.e. containment external to and separate from primary containment). Secondary containment shall be constructed of materials of sufficient thickness, density and composition so as not to be structurally weakened as a result of contact with the fuel stored and capable of containing discharged fuel for a period of time equal to or longer than the maximum anticipated time sufficient to allow recovery of discharged fuel.

The tanks shall be in sound condition free of rust or other damage which might compromise containment. Fuel storage areas shall meet all Environmental Protection Agency (EPA), OSHA and other regulatory requirements for signage, fire extinguisher, etc. Hoses, valves, fittings, caps, filler nozzles and associated hardware shall be maintained in proper working condition at all times. The location of fuel tanks shall be shown on the Site Maps and shall be located to minimize exposure to weather and surface water drainage features.

The Operator shall develop and implement a Materials Handling and Spill Prevention Plan (MHSPP) in accordance with the EPA and State of Colorado requirements. In the event of an accidental spill, immediate action shall be undertaken by the Operator to contain and remove the spilled material. All hazardous materials, including contaminated soil, shall be disposed of by the Operator in the manner specified by federal, state and local regulations and by the manufacturer of such products. As soon as possible, the spill shall be reported to the appropriate agencies. As required under the provisions of the Clean Water Act, any spill or discharge entering waters of the United States shall be properly reported. The Operator shall prepare a written record of any spill and associated clean-up activities of petroleum products or hazardous materials in excess of 1 gallon or reportable quantities, whichever is less.

Any spills of petroleum products or hazardous materials in excess of Reportable Quantities as defined by EPA or the state or local agency regulations, shall be immediately reported to the Colorado Department of Public Health and Environment spill reporting lines.

- CDPHE Environmental Release and Incident Reporting Line (877) 518-5608.

For reference, a bulletin on Environmental Spill Reporting published by the CDPHE, has been included in the Appendices of this report.

<u>Vehicle Tracking and Dust Control</u>
Vehicle Tracking Control BMPs (structural and non-structural) shall be implemented in order to control potential sediment discharges from vehicle tracking. Practices shall be implemented for all areas of

potential vehicle tracking which include but are not limited to reduced Site access and utilization of designated haul routes.

Areas of soil that are denuded of vegetation and have little protection from particles being picked up and carried by wind should be protected with a temporary cover or kept under control with water or other soil adhering products to limit wind transported particles exiting the Site perimeter.

Waste Management and Disposal

An effective first step towards preventing pollution in stormwater from work sites involves using a commonsense approach to improve the facility's basic housekeeping methods. Poor housekeeping practices result in increased waste and potential for stormwater contamination.

No solid materials are allowed to be discharged from the Site with stormwater. All solid waste, including disposable materials incidental to the construction activities, must be collected and placed in containers. Secure covers for the containers shall be provided at all times to meet state and local requirements. The location of solid waste receptacles shall be identified on the SWMP by the Operator.

Concrete waste is anticipated with this Project; and therefore, a dedicated concrete washout is required. The SWMP Administrator shall take appropriate containment and treatment measures and document as necessary.

Portable Toilets

Portable toilets shall be provided on-site as necessary for construction personnel. Portable toilets shall be located on flat surfaces away from drainage paths, tied-down or staked-down, emptied regularly, and where possible secondary containment pans shall be provided under the portable toilets. Portable toilets will be located a minimum of 10 feet from stormwater inlets and 50 feet from state waters. They will be secured at all four corners to prevent overturning and cleaned on a weekly basis. They will be inspected daily for spills. In the event of a spill, the Permittee shall follow spill prevention measures as noted in the Appendix.

## NON-STORMWATER DISCHARGE COMPONENTS

Only specifically authorized non-stormwater discharges are allowed to enter the storm sewer and all authorized non-stormwater discharges shall be eliminated or reduced to the extent practical. There are no non-stormwater discharges anticipated at the Site.

Appropriate control measures shall be used to minimize the discharge of pollutants. Such control measures will be strictly followed to ensure any impacts from non-stormwater discharges are reduced or eliminated. Appropriate control measures are:

- Emergency Fire Fighting Activities

- Uncontaminated ground water or spring water

  If possible, direct uncontaminated ground water or spring water to stabilized points of discharge. If discharged to a disturbed area, assure measures to control erosive velocities and sediment control measures are implemented. Velocity control measures include riprap aprons and other conveyance measures. Sediment control measures might include stone check dams, sediment traps and basins.

  If uncontaminated ground water is discharged off-site, a Construction Dewatering Permit will

be required. This Permit will not apply if dewatering is not performed or if water is not discharged off-site.

- Landscape Irrigation Return Flows
  Volume of water used for irrigation prior to establishment of vegetation shall be controlled to prevent excess runoff and erosion. Temporary sediment control measures shall remain in place until all upstream disturbed areas are stabilized. Sediment loss will be controlled using sediment control measures such as wattles, sediment fence, and vegetative buffers.

# STABILIZATION AND STORMWATER MANAGEMENT

## TEMPORARY STABILIZATION AND SHORT-TERM STORMWATER MANAGEMENT

The County considers the completion of over-lot grading operations, by definition, to be substantially complete; therefore, all areas that will be dormant for more than 30 days after the completion of the over-lot grading will require temporary seeding within 14 days of establishment. This does not preclude the 7-day requirement for areas fully completed in the future. At a minimum, in ensuring that this requirement is followed, adequate phasing/scheduling will be required.

## FINAL STABILIZATION AND LONG-TERM STORMWATER MANAGEMENT

In the natural condition, the site soil is stabilized by means of native vegetation. The final stabilization technique to be used at this project for stabilizing soils shall be to provide a protective cover of landscaping vegetation, pavement and granular stabilization material. Seeding should be conducted after final grade is achieved and soils are prepared to take advantage of soil moisture and seed germination. The Qualified Stormwater Manager should evaluate the short and long-term forecasts prior to applying permanent seed. Three full spectrum extended detention basins will be constructed as part of Filing No. 1. These detention basins will be designed to release flows at or less than historic rates.

**Final site stabilization is achieved when vegetative cover provides permanent stabilization with a density greater than 70 percent of the pre-disturbance levels, or equivalent permanent, physical erosion reduction methods have been employed over the entire area to be stabilized by vegetative cover.**

# INSPECTION AND MAINTENANCE

Inspections shall be the responsibility of the Qualified Stormwater Manager throughout the construction process.

## INSPECTION SCHEDULE REQUIREMENTS

Inspection and maintenance of erosion control measures shall comply with the criteria set forth by the General Permit (COR400000), or the following, whichever is more stringent.
**The Permittee or Contractor shall produce written and signed records every seven (7) days and after within 24 hours after every significant precipitation events or snow melt that causes surface erosion. All necessary maintenance and repair shall be completed immediately**. If more

frequent inspections are required to ensure that control measures are properly maintained and operated, the inspection schedule shall be modified to meet this need.

When snow cover exists over the entire site for an extended period, inspections are not always feasible. This condition should be documented, including date of snowfall and date of melting conditions to bring awareness of and preparation for areas where melting conditions may pose a risk of surface erosion.
A copy of the SWMP shall be maintained at the site at all times. Any degradation of the control measures described in the SWMP or excessive accumulation of sediments shall be remedied immediately upon discovery. The Contractor shall record all storm events on the Storm Event Log included in **Appendix**.

## INSPECTION PROCEDURES

The inspection shall include observations of:

- The Construction Site Perimeter and Discharge Points;
- All Disturbed Areas;
- Vehicles and Equipment;
- Areas Used for Material / Waste Storage That are Exposed to Precipitation;
- Other Areas Determined to Have a Significant Potential for Stormwater Pollution;
- Erosion and Sediment Control Measures Identified in the SWMP; and
- Any Other Structural Control Measures That May Require Maintenance.

The inspection must determine if there is evidence of, or the potential for, pollutants entering the drainage system. Control measures should be reviewed to determine if they still meet the design intent and operational criteria in the SWMP and if they continue to adequately control pollutants at the site. Any control measures not operating in accordance with the SWMP must be addressed as soon as possible, immediately in most cases, to minimize the discharge of pollutants and the SWMP must be updated and inspections must be documented.
Examples of specific items to evaluate during site inspections are listed below. This list is not intended to be comprehensive. Ultimately, it is the responsibility of the Contractor to assure the adequacy of site pollutant discharge controls. Actual physical site conditions or contractor practices could make it necessary to install more controls than are shown on the plans. Assessing the need for additional controls and implementing them or adjusting existing controls will be an ongoing requirement until the site achieves final stabilization.

1. Vehicle Tracking Control - Locations where vehicles enter and exit the site shall be inspected for evidence of offsite sediment tracking. Exits shall be maintained as necessary to prevent the release of sediment from vehicles leaving the site. Any sediment deposited on the adjacent roadway shall be removed as necessary throughout the day or at the end of every day and disposed of in an appropriate manner. Sediment shall not be washed into storm sewer systems.
2. Erosion Control Devices - Rolled erosion control products (nets, blankets, turf reinforcement mats) and marginally vegetated areas (areas not meeting required vegetative densities for final stabilization) must be inspected frequently. Riling, rutting and other signs of erosion indicate the erosion control device is not functioning properly and additional erosion control devices are warranted.
3. Sediment Control Devices - Sediment barriers (silt fence, sediment control logs, etc.), traps and basins must be inspected, and they must be cleaned out at such time as their original capacity has been reduced by 50 percent. All material excavated from behind sediment

barriers or in traps and basins shall be incorporated into onsite soils or spread out on an upland portion of the site and stabilized. To minimize the potential for sediment releases from the Project, site perimeter control devices shall be inspected with consideration given to changing up-gradient conditions.

4. Material Storage Areas - Material storage areas should be located to minimize exposure to weather. Inspections shall evaluate disturbed areas and areas used for storing materials that are exposed to rainfall for evidence of, or the potential for, pollutants entering the drainage system or discharging from the site. If necessary, the materials must be covered, or original covers must be repaired or supplemented. Also, protective berms must be constructed, if needed, in order to contain runoff from material storage areas. All state and local regulations pertaining to material storage areas shall be adhered to.
5. Vegetation - Seed/Sod shall be free of weedy species and appropriate for site soils and regional climate. Seeding, sodding, tacking, and mulching shall be completed, in accordance with the requirements outlined within the Project Manual and locations identified within the plans, immediately after topsoil is applied and final grade is reached. Grassed areas shall be inspected to confirm that a healthy stand of grass is maintained. Rip-rap, mulch, gravel, decomposed granite or other equivalent permanent stabilization measures may be employed in lieu of vegetation based on site-specific conditions and Owner approval.
6. Discharge Points - All discharge points must be inspected to determine whether erosion and sediment control measures are effective in preventing discharge of sediment from the site or impacts to receiving waters.

Based on the inspection results, all necessary maintenance and repair shall be completed immediately and in no cases longer than seventy-two (72) hours after identification. The inspection reports must be completed after each inspection. An important aspect of the inspection report is the description of additional measures that need to be taken to enhance plan effectiveness. The inspection report must identify whether the site was in compliance with the SWMP at the time of inspection and specifically identify all incidents of non-compliance.

The Qualified Stormwater Manager shall ensure that, at a minimum, the following is recorded for each inspection and kept onsite for reference:

a. The inspector's name and signature (must be a Qualified Stormwater Manager),
b. The date and type of the inspection (regular inspection vs. post-storm inspection),
c. Weather conditions at the time of the inspection,
d. Phase of construction at the time of the inspection,
e. Estimated acreage of disturbance at the time of inspection,
f. The minimum frequency of inspections chosen,
g. Location(s) of discharges of sediment or other pollutants from the site,
h. Location(s) of control measures needing maintenance,
i. Location(s) and identification of inadequate control measures
j. Location(s) and identification of additional control measures are needed that were not in place at the time of inspection, and
k. Any corrective actions taken.

If repairs are needed to any control measures, they shall be completed immediately. After adequate corrective action(s) and maintenance have been taken, or where a report does not identify any incidents requiring corrective action or maintenance, the report shall contain a statement stating the following:

"I verify that, to the best of my knowledge and belief, all corrective action and maintenance items identified during the inspection are complete, and the site is currently in compliance with the permit."

This statement must be signed by a Qualified Stormwater Manager. If it is infeasible to install or repair of control measure immediately after discovering the deficiency, the following information must be documented and kept on record:

1. Describe why it is infeasible to initiate the installation or repair immediately; and
2. Provide a schedule for installing or repairing the control measure and returning it to an effective operating condition as soon as possible.

The use and maintenance of log books, photographs, field notebooks, drawings or maps should also be included in the SWMP records when appropriate. Copies of the Inspection and Sampling Report Forms have been included in **Appendix** for reference and use.

## CONTROL MEASURE MAINTENANCE / REPLACEMENT AND FAILED CONTROL MEASURES

Site inspection procedures noted above must address maintenance of control measures that are found to no longer function as needed and designed, as well as preventive measures to proactively ensure continued operation.

The Qualified Stormwater Manager shall implement a preventative maintenance program to ensure that control measure breakdowns and failures are handled proactively. Site inspections should uncover any conditions which could result in the discharge of pollutants to storm sewers and surface waters and shall be rectified. For example, sediment shall be removed from silt fences on a regular basis to prevent failure of the control measure. Sediment shall be removed to an appropriate location so that it will not become an additional pollutant source.

The inspection process must also include replacement of control measures when needed or the addition of new control measures in order to adequately manage the pollutant sources at the site.

Any control measure deficiencies, replacement or additional control measures that may be required shall be documented on the Stormwater Management Site Map and on the appropriate Inspection Form. If amendments to the SWMP are required, these amendments shall be documented on the SWMP Amendment Log included in **Appendix** for reference and use.

## DISPOSITION OF TEMPORARY MEASURES

Most temporary erosion and sediment control measures must be removed within 30 days after final site stabilization is achieved. Trapped sediment and disturbed soil areas resulting from the disposal of temporary measures must be returned to final plan grades and permanently stabilized to prevent further soil erosion.

## PLAN MODIFICATIONS

This document should be viewed as a “living document” that is continuously being reviewed and modified as a part of the overall process of evaluating and managing stormwater quality issues at the site. The Qualified Stormwater Manager shall amend the SWMP when there is a change in design, construction, operation or maintenance of the site which would require the implementation of new or revised BMPs or if the SWMP proves to be ineffective in achieving the general objectives of controlling pollutants in stormwater discharges associated with construction activity or when BMPs are no longer necessary and are removed. These actions are defined under the Control Measure Maintenance/Replacement and Failed Control Measure Section of this report.

Plan revisions made prior to or following a change(s) onsite, including revisions to sections addressing site conditions and control measures, a notation must be included in the plan the identifies:

- Date of site change,
- The control measure removed or modified,
- The location(s) of those control measures, and
- Any changes to the control measure.

This document does not incorporate or rely on control measures owned or operated by another entity.

## REFERENCES

Colorado Discharge Permit System (CDPS) – Stormwater Discharge Associated with Construction Activities Application - Prepared by Water Quality Control Division, Colorado Department of Public Health and Environment; Revised April 2019.

Colorado Discharge Permit System (CDPS) General Permit – Stormwater Discharges Associated with Construction Activity - Prepared by Water Quality Control Division, Colorado Department of Public Health and Environment; signed and issued on May 31, 2007 and administratively continued effective July 1, 2012.

NRCS Web Soil Survey - Website: http://websoilsurvey.nrcs.usda.gov

Stormwater Discharges Associated with Construction Activity – Stormwater Management Plan Preparation Guidance - Prepared by Water Quality Control Division, Colorado Department of Public Health and Environment; Revised April 2011.

Urban Storm Drainage Criteria Manual, Volume 3 – Mile High Flood District, Denver, CO.; November 2015.

Wastewater Study, Overlook at Homestead – Prepared by Entech Engineering, August 2, 2023

# APPENDICES

# APPENDIX A
# STORMWATER MANAGEMENT PLANS / SITE MAPS

# OVERLOOK AT HOMESTEAD FILING NO. 1

## PRE DEVELOPMENT GRADING AND EROSION CONTROL PLAN

THE NORTHEAST QUARTER OF THE NORTHEAST QUARTER; THE SOUTH HALF OF THE NORTHEAST QUARTER; AND THE SOUTHEAST QUARTER OF THE NORTHWEST QUARTER, ALL IN SECTION 27, TOWNSHIP 11 SOUTH, RANGE 64 WEST OF THE 6TH P.M., COUNTY OF EL PASO, STATE OF COLORADO

## CONTACTS:


OWNER:
PT OVERLOOK LLC
1864 WOODMOOR DRIVE, SUITE 100
MONUMENT, CO 80132
CONTACT: JOE DESJARDIN
TEL: 719-476-0800

ENGINEER:
KIMLEY-HORN AND ASSOCIATES, INC.
2 NEVADA NORTH AVE., SUITE 300
COLORADO SPRINGS, CO 80903
CONTACT: KEVIN KOFFORD, PE
TEL: 719-453-0180

SURVEYOR:
EDWARD-JAMES SURVEYING, INC.
926 ELKTON DRIVE
COLORADO SPRINGS, CO 80907
CONTACT: JON TESSIN, PLS
TEL: (719) 576-1216

EL PASO COUNTY:
EL PASO COUNTY
PLANNING AND COMMUNITY DEVELOPMENT DEPARTMENT
2880 INTERNATIONAL CIRCLE, SUITE 110
COLORADO SPRINGS, CO 80910
PHONE: (719) 520-6300


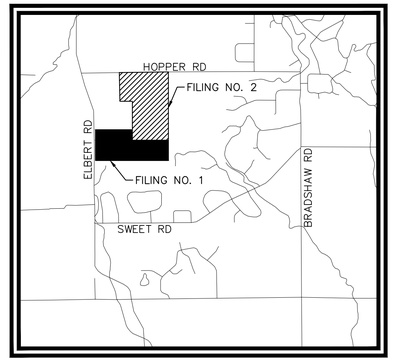


VICINITY MAP
SCALE: 1":5000'
NORTH

## BENCHMARK

A 2.5" ALUMINUM CAP BEING A 30 FOOT WITNESS CORNER NORTH OF THE SOUTHWEST CORNER OF SECTION 24, TOWNSHIP 11 SOUTH, RANGE 65 WEST OF THE 6TH PRINCIPAL MERIDIAN.

## BASIS OF BEARING

THE WEST LINE OF THE NORTHWEST QUARTER OF SECTION 24, TOWNSHIP 11 SOUTH, RANGE 65 WEST OF THE 6 PRINCIPAL MERIDIAN MONUMENTED ON THE SOUTHERLY END BY A 2-1/2"ALUMINUM CAP STAMPED "LS 28658" AND AT THE NORTHERLY END BY A 3-1/2"ALUMINUM CAP STAMPED "LS 12103" BEING ASSUMED TO BEAR N00°14'25"E A DISTANCE OF 2636.99 FEET AS SHOWN IN LAND SURVEY PLAT RECORDED UNDER RECEPTION 218900072 RECORDS OF EL PASO COUNTY, COLORADO.

## LEGAL DESCRIPTION

THE NORTHEAST QUARTER OF THE NORTHEAST QUARTER; THE SOUTH HALF OF THE NORTHEAST QUARTER; AND THE SOUTHEAST QUARTER OF THE NORTHWEST QUARTER, ALL IN SECTION 27, TOWNSHIP 11 SOUTH, RANGE 64 WEST OF THE 6TH P.M., COUNTY OF EL PASO, STATE OF COLORADO.

TOGETHER WITH

THE NORTH HALF OF THE SOUTHEAST QUARTER OF SECTION 22 IN TOWNSHIP 11 SOUTH, RANGE 64 WEST OF THE 6TH PRINCIPAL MERIDIAN; EXCEPTING THEREFROM THE PORTION OF LAND CONVEYED IN DEED RECORDED OCTOBER 4, 2005 UNDER RECEPTION NO. 205156836, COUNTY OF EL PASO, STATE OF COLORADO.

TOGETHER WITH

THE SOUTHEAST QUARTER OF THE SOUTHEAST QUARTER OF SECTION 22 IN TOWNSHIP 11 SOUTH, RANGE 64 WEST OF THE 6TH PRINCIPAL MERIDIAN; THE NORTHWEST QUARTER OF THE NORTHEAST QUARTER OF SECTION 27 IN TOWNSHIP 11 SOUTH, RANGE 64 WEST OF THE 6TH PRINCIPAL MERIDIAN; THE NORTHEAST QUARTER OF THE NORTHWEST QUARTER OF SECTION 27 IN TOWNSHIP 11 SOUTH, RANGE 64 WEST OF THE 6TH PRINCIPAL MERIDIAN, EXCEPT THAT PORTION OF SAID QUARTER SECTION LYING NORTHWEST OF THE FORMER RIGHT OF WAY OF THE COLORADO AND SOUTHERN RAILWAY COMPANY, COUNTY OF EL PASO, STATE OF COLORADO AND EXCEPTING ANY PORTION CONVEYED TO THE DEPARTMENT OF HIGHWAYS IN DEED RECORDED MARCH 26, 1959 IN BOOK 1734 AT PAGE 504.

CONTAINING A CALCULATED AREA OF 350.830 ACRES,

Sheet List Table

| Sheet Number | Sheet Title |
|---|---|
| 1.0 | COVER SHEET |
| 1.1 | NOTES |
| 1.2 | CUT AND FILL PLAN |
| 1.3 | GEC INITIAL PLAN |
| 1.4 | GEC INITIAL PLAN |
| 1.5 | GEC INITIAL PLAN |
| 1.6 | GEC INITIAL PLAN |
| 1.7 | GEC INTERIM PLAN |
| 1.8 | GEC INTERIM PLAN |
| 1.9 | GEC INTERIM PLAN |
| 1.10 | GEC INTERIM PLAN |
| 1.11 | GEC FINAL PLAN |
| 1.12 | GEC FINAL PLAN |
| 1.13 | GEC FINAL PLAN |
| 1.14 | GEC FINAL PLAN |
| 1.15 | CULVERT PLAN |
| 1.16 | CULVERT PLAN |
| 1.17 | CULVERT PLAN |
| 1.18 | CULVERT END TREATMENT |
| 1.19 | DETAIL SHEET (1 OF 7) |
| 1.20 | DETAIL SHEET (2 OF 7) |
| 1.21 | DETAIL SHEET (3 OF 7) |
| 1.22 | DETAIL SHEET (4 OF 7) |
| 1.23 | DETAIL SHEET (5 OF 7) |
| 1.24 | DETAIL SHEET (6 OF 7) |
| 1.25 | DETAIL SHEET (7 OF 7) |

## FLOODPLAIN NOTE

FEDERAL EMERGENCY MANAGEMENT AGENCY, FLOOD INSURANCE RATE MAP, MAP NUMBER 08041C0350G, EFFECTIVE DECEMBER 7, 2018 INDICATES THE PROJECT AREA TO BE IN ZONE X (AREA DETERMINED TO BE OUT OF THE 500 YEAR FLOODPLAIN).

## SOIL TYPE

THE SOIL ON SITE IS USGS HYDROLOGIC SOIL GROUP B.

## SITE INFORMATION

TIMING:
ANTICIPATED STARTING AND COMPLETION TIME PERIOD OF SITE GRADING:
START: SUMMER 2025
END: SUMMER 2026
EXPECTED DATE ON WHICH THE FINAL STABILIZATION WILL BE COMPLETE:
SUMMER 2026

AREAS:
TOTAL FILING NO. 1 DISTURBED AREA: 31.52 ACRES

RECEIVING WATERS:
NAME OF RECEIVING WATERS: UPPER BLACK SQUIRREL, LA VEGA RANCH

DESCRIPTION OF EXISTING VEGETATION:
THE EXISTING SITE IS CURRENTLY UNDEVELOPED AND GROUND COVER CONSISTS OF 90% NATIVE GRASSES, SHRUBS, AND TREES.

DESCRIPTION OF PERMANENT BMPS:
THREE (3) FULL SPECTRUM EXTENDED DETENTION BASIN

## LIMITS OF CONSTRUCTION

| | |
|---|---|
| ONSITE DISTURBANCE | = ±30.94 ACRES |
| OFFSITE DISTURBANCE | = ±0.58 ACRES |
| TOTAL | = ±31.52 ACRES |

## GEC PLAN SIGNATURES:

### DEVELOPER'S/OWNER'S SIGNATURE BLOCK

I, THE OWNER/DEVELOPER HAVE READ AND WILL COMPLY WITH THE REQUIREMENTS OF THE GRADING AND EROSION CONTROL PLAN.

Joseph W. DesJardin — 09/10/2024

PT OVERLOOK, LLC — DATE

### ENGINEER'S SIGNATURE BLOCK

THIS GRADING AND EROSION CONTROL PLAN WAS PREPARED UNDER MY DIRECTION AND SUPERVISION AND IS CORRECT TO THE BEST OF MY KNOWLEDGE AND BELIEF. SAID PLAN HAS BEEN PREPARED ACCORDING TO THE CRITERIA ESTABLISHED BY THE COUNTY FOR GRADING AND EROSION CONTROL PLANS. I ACCEPT RESPONSIBILITY FOR ANY LIABILITY CAUSED BY ANY NEGLIGENT ACTS, ERRORS OR OMISSIONS ON MY PART IN PREPARING THIS PLAN.

COLORADO LICENSED — KEVIN REX KOFFORD — 57234 — 9/17/24 — PROFESSIONAL ENGINEER

KEVIN KOFFORD, P.E. 57234 – KIMLEY-HORN AND ASSOCIATES, INC. — DATE

### EL PASO COUNTY

COUNTY PLAN REVIEW IS PROVIDED ONLY FOR GENERAL CONFORMANCE WITH COUNTY DESIGN CRITERIA. THE COUNTY IS NOT RESPONSIBLE FOR THE ACCURACY AND ADEQUACY OF THE DESIGN, DIMENSIONS, AND/OR ELEVATIONS WHICH SHALL BE CONFIRMED AT THE JOB SITE. THE COUNTY THROUGH THE APPROVAL OF THIS DOCUMENT ASSUMES NO RESPONSIBILITY FOR COMPLETENESS AND/OR ACCURACY OF THIS DOCUMENT.

FILED IN ACCORDANCE WITH THE REQUIREMENTS OF THE EL PASO COUNTY LAND DEVELOPMENT CODE, DRAINAGE CRITERIA MANUAL VOLUMES 1 AND 2, AND ENGINEERING CRITERIA MANUAL, AS AMENDED.

IN ACCORDANCE WITH ECM SECTION 1.12, THESE CONSTRUCTION DOCUMENTS WILL BE VALID FOR CONSTRUCTION FOR A PERIOD OF 2 YEARS FROM THE DATE SIGNED BY THE EL PASO COUNTY ENGINEER. IF CONSTRUCTION HAS NOT STARTED WITHIN THOSE 2 YEARS, THE PLANS WILL NEED TO BE RESUBMITTED FOR APPROVAL, INCLUDING PAYMENT OF REVIEW FEES AT THE PLANNING AND COMMUNITY DEVELOPMENT DIRECTOR'S DISCRETION.

9/17/2024

JOSHUA PALMER, P.E. – COUNTY ENGINEER/ECM ADMINISTRATOR — DATE

811 Know what's below. Call before you dig.

CALL UTILITY NOTIFICATION CENTER OF COLORADO
1-800-922-1987
CALL 2-BUSINESS DAYS IN ADVANCE BEFORE YOU DIG, GRADE, OR EXCAVATE FOR THE MARKING OF UNDERGROUND MEMBER UTILITIES

| NO. | REVISION | BY | DATE | APPR. |
|---|---|---|---|---|


Kimley»Horn
2024 KIMLEY-HORN AND ASSOCIATES, INC.
2 North Nevada Avenue Suite 900
Colorado Springs, Colorado 80903 (719) 453-0180


DESIGNED BY: KRK
DRAWN BY: AJL
CHECKED BY: KRK
DATE: 08/01/2024

OVERLOOK AT HOMESTEAD FILING NO. 1
EL PASO COUNTY, COLORADO
PRE DEVELOPMENT GESC PLAN
COVER SHEET

COLORADO LICENSED — KEVIN REX KOFFORD — 57234 — 9/17/24 — PROFESSIONAL ENGINEER

PROJECT NO. 196239003

SHEET 1.0

PCD FILE NO.: EGP241

EPC 9/17/2024


k:\cos_civil\196239003_overlook\CADD\PlanSheets\EG\EG_CV.dwg Kofford, Kevin 9/9/2024 1:08 PM

# EL PASO COUNTY GRADING AND EROSION CONTROL PLAN NOTES

1. STORMWATER DISCHARGES FROM CONSTRUCTION SITES SHALL NOT CAUSE OR THREATEN TO CAUSE POLLUTION, CONTAMINATION, OR DEGRADATION OF STATE WATERS. ALL WORK AND EARTH DISTURBANCE SHALL BE DONE IN A MANNER THAT MINIMIZES POLLUTION OF ANY ON–SITE OR OFF–SITE WATERS, INCLUDING WETLANDS.
2. NOTWITHSTANDING ANYTHING DEPICTED IN THESE PLANS IN WORDS OR GRAPHIC REPRESENTATION, ALL DESIGN AND CONSTRUCTION RELATED TO ROADS, STORM DRAINAGE AND EROSION CONTROL SHALL CONFORM TO THE STANDARDS AND REQUIREMENTS OF THE MOST RECENT VERSION OF THE RELEVANT ADOPTED EL PASO COUNTY STANDARDS, INCLUDING THE LAND DEVELOPMENT CODE, THE ENGINEERING CRITERIA MANUAL, THE DRAINAGE CRITERIA MANUAL, AND THE DRAINAGE CRITERIA MANUAL VOLUME 2. ANY DEVIATIONS FROM REGULATIONS AND STANDARDS MUST BE REQUESTED, AND APPROVED, IN WRITING.
3. A SEPARATE STORMWATER MANAGEMENT PLAN (SMWP) FOR THIS PROJECT SHALL BE COMPLETED AND AN EROSION AND STORMWATER QUALITY CONTROL PERMIT (ESQCP) ISSUED PRIOR TO COMMENCING CONSTRUCTION. MANAGEMENT OF THE SWMP DURING CONSTRUCTION IS THE RESPONSIBILITY OF THE DESIGNATED QUALIFIED STORMWATER MANAGER OR CERTIFIED EROSION CONTROL INSPECTOR. THE SWMP SHALL BE LOCATED ON SITE AT ALL TIMES DURING CONSTRUCTION AND SHALL BE KEPT UP TO DATE WITH WORK PROGRESS AND CHANGES IN THE FIELD.
4. ONCE THE ESQCP IS APPROVED AND A "NOTICE TO PROCEED" HAS BEEN ISSUED, THE CONTRACTOR MAY INSTALL THE INITIAL STAGE EROSION AND SEDIMENT CONTROL MEASURES AS INDICATED ON THE APPROVED GEC. A PRECONSTRUCTION MEETING BETWEEN THE CONTRACTOR, ENGINEER, AND EL PASO COUNTY WILL BE HELD PRIOR TO ANY CONSTRUCTION. IT IS THE RESPONSIBILITY OF THE APPLICANT TO COORDINATE THE MEETING TIME AND PLACE WITH COUNTY STAFF.
5. CONTROL MEASURES MUST BE INSTALLED PRIOR TO COMMENCEMENT OF ACTIVITIES THAT COULD CONTRIBUTE POLLUTANTS TO STORMWATER. CONTROL MEASURES FOR ALL SLOPES, CHANNELS, DITCHES, AND DISTURBED LAND AREAS SHALL BE INSTALLED IMMEDIATELY UPON COMPLETION OF THE DISTURBANCE.
6. ALL TEMPORARY SEDIMENT AND EROSION CONTROL MEASURES SHALL BE MAINTAINED AND REMAIN IN EFFECTIVE OPERATING CONDITION UNTIL PERMANENT SOIL EROSION CONTROL MEASURES ARE IMPLEMENTED AND FINAL STABILIZATION IS ESTABLISHED. ALL PERSONS ENGAGED IN LAND DISTURBANCE ACTIVITIES SHALL ASSESS THE ADEQUACY OF CONTROL MEASURES AT THE SITE AND IDENTIFY IF CHANGES TO THOSE CONTROL MEASURES ARE NEEDED TO ENSURE THE CONTINUED EFFECTIVE PERFORMANCE OF THE CONTROL MEASURES. ALL CHANGES TO TEMPORARY SEDIMENT AND EROSION CONTROL MEASURES MUST BE INCORPORATED INTO THE STORMWATER MANAGEMENT PLAN.
7. TEMPORARY STABILIZATION SHALL BE IMPLEMENTED ON DISTURBED AREAS AND STOCKPILES WHERE GROUND DISTURBING CONSTRUCTION ACTIVITY HAS PERMANENTLY CEASED OR TEMPORARILY CEASED FOR LONGER THAN 14 DAYS.
8. FINAL STABILIZATION MUST BE IMPLEMENTED AT ALL APPLICABLE CONSTRUCTION SITES. FINAL STABILIZATION IS ACHIEVED WHEN ALL GROUND DISTURBING ACTIVITIES ARE COMPLETE AND ALL DISTURBED AREAS EITHER HAVE A UNIFORM VEGETATIVE COVER WITH INDIVIDUAL PLANT DENSITY OF 70 PERCENT OF PRE–DISTURBANCE LEVELS ESTABLISHED OR EQUIVALENT PERMANENT ALTERNATIVE STABILIZATION METHOD IS IMPLEMENTED. ALL TEMPORARY SEDIMENT AND EROSION CONTROL MEASURES SHALL BE REMOVED UPON FINAL STABILIZATION AND BEFORE PERMIT CLOSURE.
9. ALL PERMANENT STORMWATER MANAGEMENT FACILITIES SHALL BE INSTALLED AS DESIGNED IN THE APPROVED PLANS. ANY PROPOSED CHANGES THAT EFFECT THE DESIGN OR FUNCTION OF PERMANENT STORMWATER MANAGEMENT STRUCTURES MUST BE APPROVED BY THE ECM ADMINISTRATOR PRIOR TO IMPLEMENTATION.
10. EARTH DISTURBANCES SHALL BE CONDUCTED IN SUCH A MANNER SO AS TO EFFECTIVELY MINIMIZE ACCELERATED SOIL EROSION AND RESULTING SEDIMENTATION. ALL DISTURBANCES SHALL BE DESIGNED, CONSTRUCTED, AND COMPLETED SO THAT THE EXPOSED AREA OF ANY DISTURBED LAND SHALL BE LIMITED TO THE SHORTEST PRACTICAL PERIOD OF TIME. PRE–EXISTING VEGETATION SHALL BE PROTECTED AND MAINTAINED WITHIN 50 HORIZONTAL FEET OF A WATERS OF THE STATE UNLESS SHOWN TO BE INFEASIBLE AND SPECIFICALLY REQUESTED AND APPROVED.
11. COMPACTION OF SOIL MUST BE PREVENTED IN AREAS DESIGNATED FOR INFILTRATION CONTROL MEASURES OR WHERE FINAL STABILIZATION WILL BE ACHIEVED BY VEGETATIVE COVER. AREAS DESIGNATED FOR INFILTRATION CONTROL MEASURES SHALL ALSO BE PROTECTED FROM SEDIMENTATION DURING CONSTRUCTION UNTIL FINAL STABILIZATION IS ACHIEVED. IF COMPACTION PREVENTION IS NOT FEASIBLE DUE TO SITE CONSTRAINTS, ALL AREAS DESIGNATED FOR INFILTRATION AND VEGETATION CONTROL MEASURES MUST BE LOOSENED PRIOR TO INSTALLATION OF THE CONTROL MEASURE(S).
12. ANY TEMPORARY OR PERMANENT FACILITY DESIGNED AND CONSTRUCTED FOR THE CONVEYANCE OF STORMWATER AROUND, THROUGH, OR FROM THE EARTH DISTURBANCE AREA SHALL BE A STABILIZED CONVEYANCE DESIGNED TO MINIMIZE EROSION AND THE DISCHARGE OF SEDIMENT OFF SITE.
13. CONCRETE WASH WATER SHALL BE CONTAINED AND DISPOSED OF IN ACCORDANCE WITH THE SWMP. NO WASH WATER SHALL BE DISCHARGED TO OR ALLOWED TO ENTER STATE WATERS, INCLUDING ANY SURFACE OR SUBSURFACE STORM DRAINAGE SYSTEM OR FACILITIES. CONCRETE WASHOUTS SHALL NOT BE LOCATED IN AN AREA WHERE SHALLOW GROUNDWATER MAY BE PRESENT, OR WITHIN 50 FEET OF A SURFACE WATER BODY, CREEK OR STREAM.
14. DURING DEWATERING OPERATIONS OF UNCONTAMINATED GROUND WATER MAY BE DISCHARGED ON SITE, BUT SHALL NOT LEAVE THE SITE IN THE FORM OF SURFACE RUNOFF UNLESS AN APPROVED STATE DEWATERING PERMIT IS IN PLACE.
15. EROSION CONTROL BLANKETING OR OTHER PROTECTIVE COVERING SHALL BE USED ON SLOPES STEEPER THAN 3:1.
16. CONTRACTOR SHALL BE RESPONSIBLE FOR THE REMOVAL OF ALL WASTES FROM THE CONSTRUCTION SITE FOR DISPOSAL IN ACCORDANCE WITH LOCAL AND STATE REGULATORY REQUIREMENTS. NO CONSTRUCTION DEBRIS, TREE SLASH, BUILDING MATERIAL WASTES OR UNUSED BUILDING MATERIALS SHALL BE BURIED, DUMPED, OR DISCHARGED AT THE SITE.
17. WASTE MATERIALS SHALL NOT BE TEMPORARILY PLACED OR STORED IN THE STREET, ALLEY, OR OTHER PUBLIC WAY, UNLESS IN ACCORDANCE WITH AN APPROVED TRAFFIC CONTROL PLAN. CONTROL MEASURES MAY BE REQUIRED BY EL PASO COUNTY ENGINEERING IF DEEMED NECESSARY, BASED ON SPECIFIC CONDITIONS AND CIRCUMSTANCES.
18. TRACKING OF SOILS AND CONSTRUCTION DEBRIS OFF–SITE SHALL BE MINIMIZED. MATERIALS TRACKED OFF–SITE SHALL BE CLEANED UP AND PROPERLY DISPOSED OF IMMEDIATELY.
19. THE OWNER/DEVELOPER SHALL BE RESPONSIBLE FOR THE REMOVAL OF ALL CONSTRUCTION DEBRIS, DIRT, TRASH, ROCK, SEDIMENT, SOIL, AND SAND THAT MAY ACCUMULATE IN ROADS, STORM DRAINS AND OTHER DRAINAGE CONVEYANCE SYSTEMS AND STORMWATER APPURTENANCES AS A RESULT OF SITE DEVELOPMENT.
20. THE QUANTITY OF MATERIALS STORED ON THE PROJECT SITE SHALL BE LIMITED, AS MUCH AS PRACTICAL, TO THAT QUANTITY REQUIRED TO PERFORM THE WORK IN AN ORDERLY SEQUENCE. ALL MATERIALS STORED ON–SITE SHALL BE STORED IN A NEAT, ORDERLY MANNER, IN THEIR ORIGINAL CONTAINERS, WITH ORIGINAL MANUFACTURER'S LABELS.
21. NO CHEMICAL(S) HAVING THE POTENTIAL TO BE RELEASED IN STORMWATER ARE TO BE STORED OR USED ONSITE UNLESS PERMISSION FOR THE USE OF SUCH CHEMICAL(S) IS GRANTED IN WRITING BY THE ECM ADMINISTRATOR. IN GRANTING APPROVAL FOR THE USE OF SUCH CHEMICAL(S), SPECIAL CONDITIONS AND MONITORING MAY BE REQUIRED.
22. BULK STORAGE OF ALLOWED PETROLEUM PRODUCTS OR OTHER ALLOWED LIQUID CHEMICALS IN EXCESS OF 55 GALLONS SHALL REQUIRE ADEQUATE SECONDARY CONTAINMENT PROTECTION TO CONTAIN ALL SPILLS ONSITE AND TO PREVENT ANY SPILLED MATERIALS FROM ENTERING STATE WATERS, ANY SURFACE OR SUBSURFACE STORM DRAINAGE SYSTEM OR OTHER FACILITIES.
23. NO PERSON SHALL CAUSE THE IMPEDIMENT OF STORMWATER FLOW IN THE CURB AND GUTTER OR DITCH EXCEPT WITH APPROVED SEDIMENT CONTROL MEASURES.
24. OWNER/DEVELOPER AND THEIR AGENTS SHALL COMPLY WITH THE "COLORADO WATER QUALITY CONTROL ACT" (TITLE 25, ARTICLE 8, CRS), AND THE "CLEAN WATER ACT" (33 USC 1344), IN ADDITION TO THE REQUIREMENTS OF THE LAND DEVELOPMENT CODE, DCM VOLUME II AND THE ECM APPENDIX I. ALL APPROPRIATE PERMITS MUST BE OBTAINED BY THE CONTRACTOR PRIOR TO CONSTRUCTION (1041, NPDES, FLOODPLAIN, 404, FUGITIVE DUST, ETC.). IN THE EVENT OF CONFLICTS BETWEEN THESE REQUIREMENTS AND OTHER LAWS, RULES, OR REGULATIONS OF OTHER FEDERAL, STATE, LOCAL, OR COUNTY AGENCIES, THE MOST RESTRICTIVE LAWS, RULES, OR REGULATIONS SHALL APPLY.
25. ALL CONSTRUCTION TRAFFIC MUST ENTER/EXIT THE SITE ONLY AT APPROVED CONSTRUCTION ACCESS POINTS.
26. PRIOR TO CONSTRUCTION THE PERMITTEE SHALL VERIFY THE LOCATION OF EXISTING UTILITIES.
27. A WATER SOURCE SHALL BE AVAILABLE ON SITE DURING EARTHWORK OPERATIONS AND SHALL BE UTILIZED AS REQUIRED TO MINIMIZE DUST FROM EARTHWORK EQUIPMENT AND WIND.
28. THE SOILS REPORT FOR THIS SITE HAS BEEN PREPARED BY ENTECH ENGINEERING, INC. DATED AUGUST 2, 2023 AND SHALL BE CONSIDERED A PART OF THESE PLANS.
29. AT LEAST TEN (10) DAYS PRIOR TO THE ANTICIPATED START OF CONSTRUCTION, FOR PROJECTS THAT WILL DISTURB ONE (1) ACRE OR MORE, THE OWNER OR OPERATOR OF CONSTRUCTION ACTIVITY SHALL SUBMIT A PERMIT APPLICATION FOR STORMWATER DISCHARGE TO THE COLORADO DEPARTMENT OF PUBLIC HEALTH AND ENVIRONMENT, WATER QUALITY DIVISION. THE APPLICATION CONTAINS CERTIFICATION OF COMPLETION OF A STORMWATER MANAGEMENT PLAN (SWMP), OF WHICH THIS GRADING AND EROSION CONTROL PLAN MAY BE A PART. FOR INFORMATION OR APPLICATION MATERIALS CONTACT:

    COLORADO DEPARTMENT OF PUBLIC HEALTH AND ENVIRONMENT
    WATER QUALITY CONTROL DIVISION
    WQCD – PERMITS
    4300 CHERRY CREEK DRIVE SOUTH
    DENVER, CO 80246–1530
    ATTN: PERMITS UNIT

## TYPICAL ROADWAY CROSS SECTION

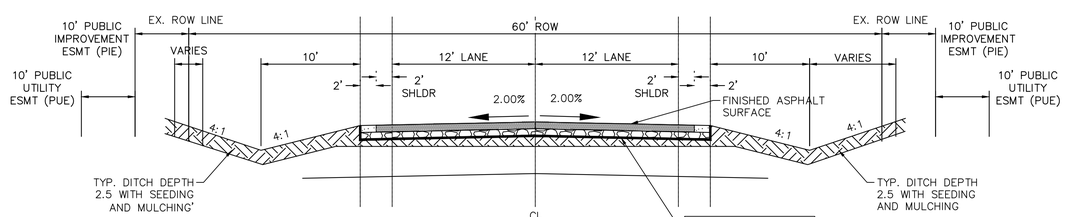


RURAL LOCAL ROADWAY

NOTE: SUBGRADE UNDERCUT GRADING IS PERMITTED WITH THIS PRE–DEVELOPMENT GRADING AND EROSION CONTROL PLAN. ASPHALT AND BASE COURSE SHALL NOT BE CONSTRUCTED WITH THE PRE–DEVELOPMENT GRADING AND EROSION CONTROL PLAN

811 Know what's **below.** **Call** before you dig.

CALL UTILITY NOTIFICATION CENTER OF COLORADO
1-800-922-1987
CALL 2–BUSINESS DAYS IN ADVANCE BEFORE YOU DIG, GRADE, OR EXCAVATE FOR THE MARKING OF UNDERGROUND MEMBER UTILITIES

| NO. | REVISION | BY | DATE | APPR. |
|---|---|---|---|---|


Kimley»Horn
2024 KIMLEY–HORN AND ASSOCIATES, INC.
2 North Nevada Avenue Suite 900
Colorado Springs, Colorado 80903 (719) 453–0180


DESIGNED BY: KRK
DRAWN BY: AJL
CHECKED BY: KRK
DATE: 08/01/2024

OVERLOOK AT HOMESTEAD FILING NO. 1
EL PASO COUNTY, COLORADO
PRE DEVELOPMENT GESC PLAN
NOTES

COLORADO LICENSED PROFESSIONAL ENGINEER 57234 9/5/2024

PROJECT NO. 196239003

SHEET 1.1

k:\cos_civil\196239003_overlook\CADD\PlanSheets\EG\EG_CV.dwg Kofford, Kevin 9/9/2024 1:08 PM

EPC 9/17/2024

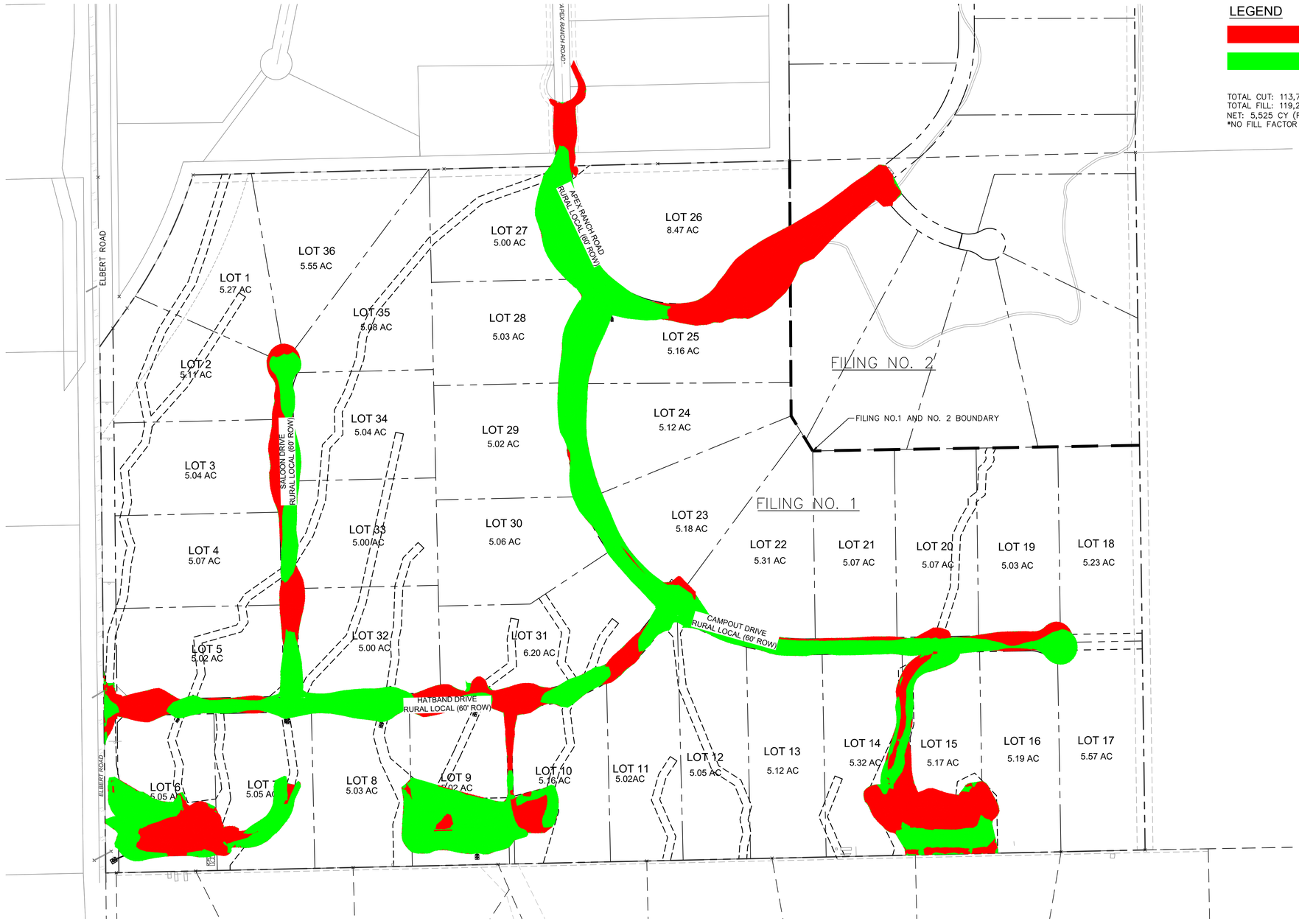


## LEGEND

CUT AREA

FILL AREA

TOTAL CUT: 113,715 CY
TOTAL FILL: 119,240 CY
NET: 5,525 CY (FILL)*
*NO FILL FACTOR APPLIED

| NO. | REVISION | BY | DATE | APPR. |
|---|---|---|---|---|

Kimley»Horn
2024 KIMLEY-HORN AND ASSOCIATES, INC.
2 North Nevada Avenue Suite 900
Colorado Springs, Colorado 80903 (719) 453-0180

DESIGNED BY: KRK
DRAWN BY: AJL
CHECKED BY: KRK
DATE: 08/01/2024

OVERLOOK AT HOMESTEAD FILING NO. 1
EL PASO COUNTY, COLORADO
PRE DEVELOPMENT GESC PLAN
# CUT AND FILL PLAN

COLORADO LICENSED
KEVIN REX KOFFORD
57234
9/9/24
PROFESSIONAL ENGINEER

PROJECT NO.
196239003

SHEET
1.2

k:\cos_civil\196239003_overlook\CADD\PlanSheets\EG\EG_CUT FILL.dwg Kofford, Kevin 9/9/2024 1:08 PM

EPC 9/17/2024

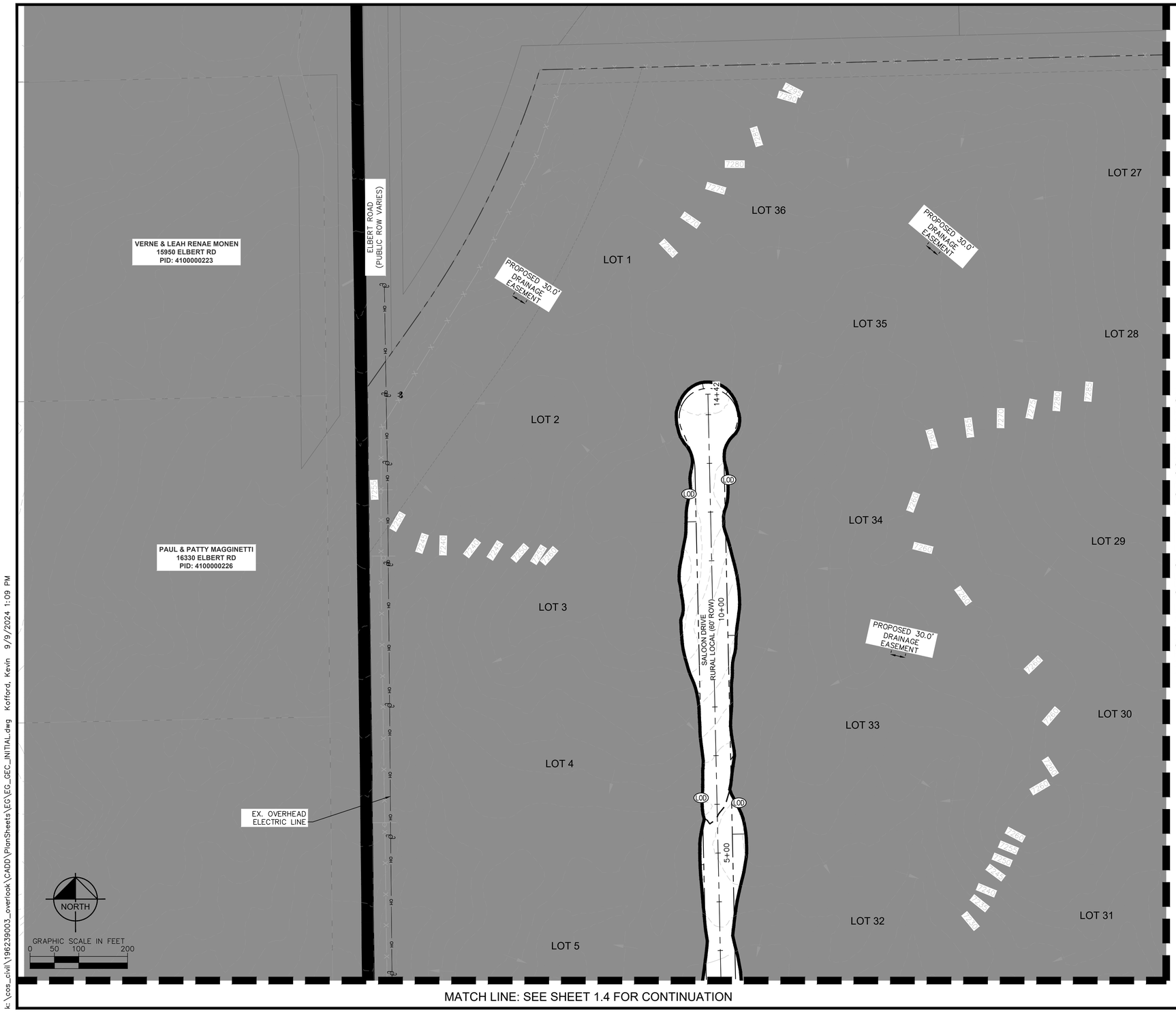


MATCH LINE: SEE SHEET 1.4 FOR CONTINUATION

MATCH LINE: SEE SHEET 1.5 FOR CONTINUATION

## LEGEND

- LOT BOUNDARY LINE
- LOT BOUNDARY LINE
- EXISTING MAJOR CONTOUR
- EXISTING MINOR CONTOUR
- PROPOSED MAJOR CONTOUR
- PROPOSED MINOR CONTOUR
- (LOD) LIMITS OF CONSTRUCTION/DISTURBANCE
- (SF) SILT FENCE
- CUT/FILL DEMARCATION
- (SP) SOIL STOCKPILE
- (SSA) STABILIZED STAGING AREA
- (VTC) VEHICLE TRACKING CONTROL
- (SM) SEEDING AND MULCHING
- TEMPORARY SEDIMENT BASIN
- FILING NO. 2 (NOT A PART OF THIS PLAN)
- (ECB) EROSION CONTROL BLANKET (SEE NOTE 4)
- (SM) SEEDING AND MULCHING
- EXISTING FLOW DIRECTION ARROW
- PROPOSED FLOW DIRECTION ARROW
- (IP) INLET PROTECTION
- (CD) CHECK DAM (SEE NOTE 8)
- (CWA) CONCRETE WASHOUT

## NOTES

1. THE INTENT OF THIS PLAN IS TO IDENTIFY THE EROSION CONTROL PRACTICES RECOMMENDED. THE CONTRACTOR SHALL REFERENCE ADDITIONAL CONSTRUCTION PLANS FOR DEMOLITION OF EXISTING AND CONSTRUCTION OF PROPOSED IMPROVEMENTS.
2. TEMPORARY STABILIZATION (TS) SHALL BE IMPLEMENTED WITHIN THE DISTURBED PORTIONS OF THE PROJECT SITE NO LATER THAN 14 DAYS FOLLOWING THE CEASE OF CONSTRUCTION ACTIVITIES WITHIN THE DISTURBED AREAS.
3. PERMANENT STABILIZATION (PS) MAY BE USED WITHIN AREAS OF TEMPORARY STABILIZATION (TS) AT THE CONTRACTOR'S DISCRETION. STABILIZATION SHALL BE APPLIED IN ACCORDANCE WITH APPLICABLE TEMPORARY STABILIZATION SEQUENCING REQUIREMENTS.
4. CONTRACTOR SHALL UTILIZE ROLLED EROSION CONTROL PRODUCTS (STRAW-SINGLE NET EROSION CONTROL BLANKETS AND OPEN WEAVE TEXTILES) ON ALL SLOPES 3H:1V OR GREATER TO ACHIEVE REQUIRED STABILIZATION.
5. SILT FENCE TO BE INSTALLED PRIOR TO COMMENCEMENT OF ONSITE GRADING AND CONSTRUCTION ACTIVITIES.
6. DEMOLITION, REMOVAL, OVEREXCAVATION AND SOIL TREATMENT SHALL BE IN ACCORDANCE WITH THE GEOTECHNICAL ENGINEER RECOMMENDATIONS AS NOTED IN THE APPROVED PROJECT GEOTECHNICAL REPORT.
7. VEGETATION COVER IS ABOUT 90% CONSISTING OF NATIVE GRASSES, TREES AND SHRUBS, BASED ON VISUAL INSPECTION
8. ROCK CHECK DAMS (CD) MAY BE SUBSTITUTED FOR SEDIMENT CONTROL LOGS (SCL) OR STRAW WADDLES. CONTRACTOR TO DETERMINE LOCATION OF CD WITHIN THE ROADSIDE DITCH (SEE TABLE FOR MIN. SPACING REQUIREMENTS) IN COORDINATION WITH COUNTY INSPECTORS.
9. NO ASPHALT OR CONCRETE BATCH PLANTS SHALL BE USED FOR THIS PROJECT.

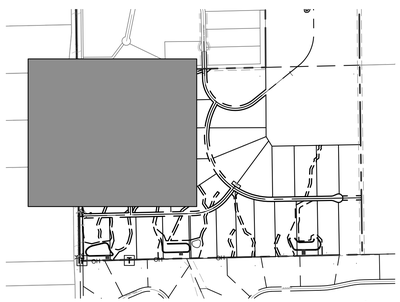

KEY MAP
SCALE: 1" = 1000'

NORTH

| NO. | REVISION | BY | DATE | APPR. |
|---|---|---|---|---|

Kimley»Horn
2024 KIMLEY-HORN AND ASSOCIATES, INC.
2 North Nevada Avenue Suite 900
Colorado Springs, Colorado 80903 (719) 453-0180

DESIGNED BY: KRK
DRAWN BY: AJL
CHECKED BY: KRK
DATE: 08/01/2024

# OVERLOOK AT HOMESTEAD FILING NO. 1
EL PASO COUNTY, COLORADO
PRE DEVELOPMENT GESC PLAN
# GEC INITIAL PLAN

COLORADO LICENSED
KEVIN REX KOFFORD
57234
8/15/2024
PROFESSIONAL ENGINEER

PROJECT NO.
196239003

SHEET
1.3

k:\cos_civil\196239003_overlook\CADD\PlanSheets\EG\EG_GEC_INITIAL.dwg Kofford, Kevin 9/9/2024 1:09 PM

EPC 9/17/2024

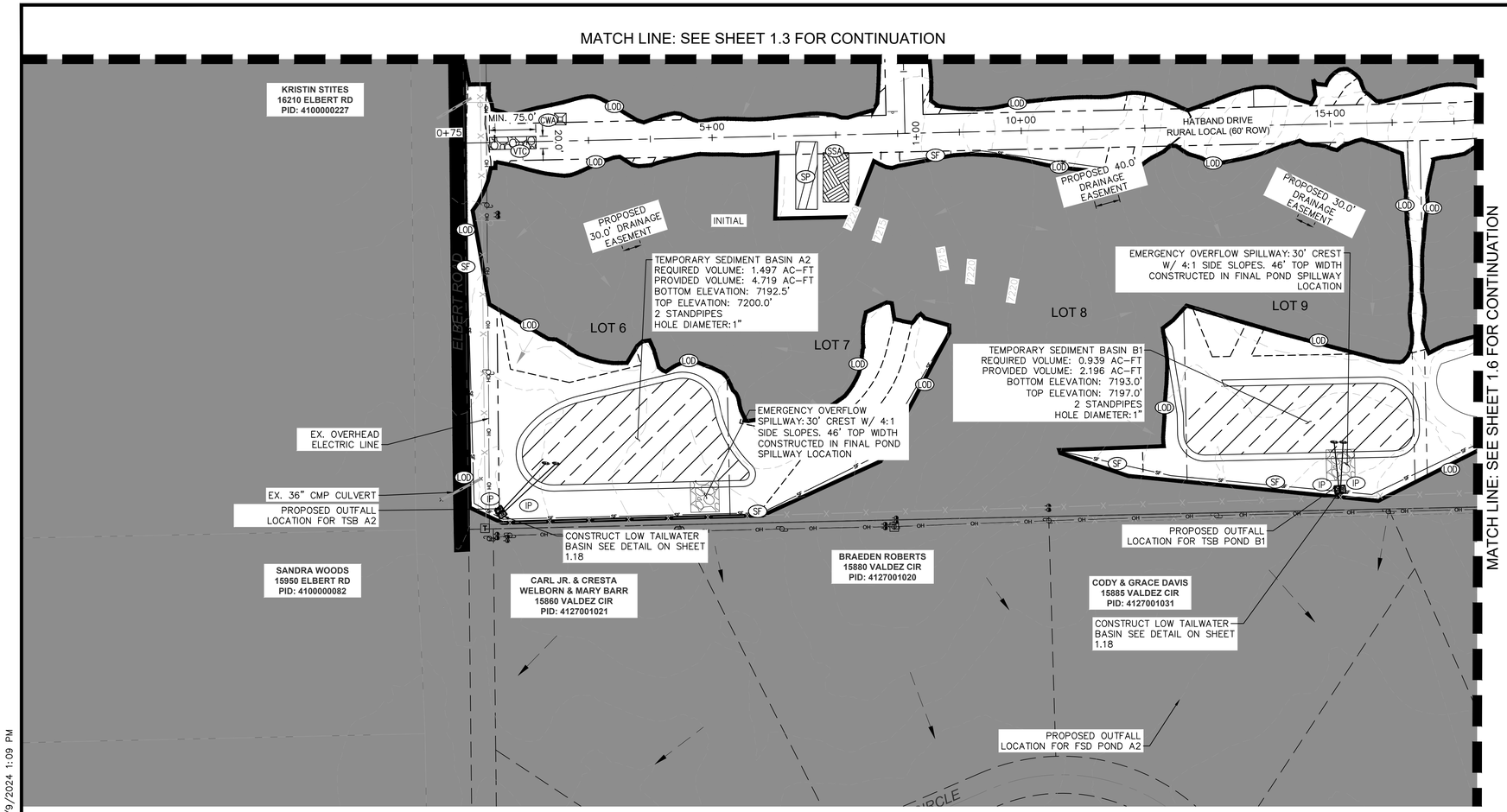


## LEGEND

- LOT BOUNDARY LINE
- LOT BOUNDARY LINE
- EXISTING MAJOR CONTOUR
- EXISTING MINOR CONTOUR
- PROPOSED MAJOR CONTOUR
- PROPOSED MINOR CONTOUR
- (LOD) LIMITS OF CONSTRUCTION/DISTURBANCE
- (SF) SILT FENCE
- CUT/FILL DEMARCATION
- (SP) SOIL STOCKPILE
- (SSA) STABILIZED STAGING AREA
- (VTC) VEHICLE TRACKING CONTROL
- (SM) SEEDING AND MULCHING
- TEMPORARY SEDIMENT BASIN
- FILING NO. 2 (NOT A PART OF THIS PLAN)
- (ECB) EROSION CONTROL BLANKET (SEE NOTE 4)
- (SM) SEEDING AND MULCHING
- EXISTING FLOW DIRECTION ARROW
- (IP) INLET PROTECTION
- (CD) CHECK DAM (SEE NOTE 8)
- (CWA) CONCRETE WASHOUT

## NOTES

1. THE INTENT OF THIS PLAN IS TO IDENTIFY THE EROSION CONTROL PRACTICES RECOMMENDED. THE CONTRACTOR SHALL REFERENCE ADDITIONAL CONSTRUCTION PLANS FOR DEMOLITION OF EXISTING AND CONSTRUCTION OF PROPOSED IMPROVEMENTS.
2. TEMPORARY STABILIZATION (TS) SHALL BE IMPLEMENTED WITHIN THE DISTURBED PORTIONS OF THE PROJECT SITE NO LATER THAN 14 DAYS FOLLOWING THE CEASE OF CONSTRUCTION ACTIVITIES WITHIN THE DISTURBED AREAS.
3. PERMANENT STABILIZATION (PS) MAY BE USED WITHIN AREAS OF TEMPORARY STABILIZATION (TS) AT THE CONTRACTOR'S DISCRETION. STABILIZATION SHALL BE APPLIED IN ACCORDANCE WITH APPLICABLE TEMPORARY STABILIZATION SEQUENCING REQUIREMENTS.
4. CONTRACTOR SHALL UTILIZE ROLLED EROSION CONTROL PRODUCTS (STRAW-SINGLE NET EROSION CONTROL BLANKETS AND OPEN WEAVE TEXTILES) ON ALL SLOPES 3H:1V OR GREATER TO ACHIEVE REQUIRED STABILIZATION.
5. SILT FENCE TO BE INSTALLED PRIOR TO COMMENCEMENT OF ONSITE GRADING AND CONSTRUCTION ACTIVITIES.
6. DEMOLITION, REMOVAL, OVEREXCAVATION AND SOIL TREATMENT SHALL BE IN ACCORDANCE WITH THE GEOTECHNICAL ENGINEER RECOMMENDATIONS AS NOTED IN THE APPROVED PROJECT GEOTECHNICAL REPORT.
7. VEGETATION COVER IS ABOUT 90% CONSISTING OF NATIVE GRASSES, TREES AND SHRUBS, BASED ON VISUAL INSPECTION
8. ROCK CHECK DAMS (CD) MAY BE SUBSTITUTED FOR SEDIMENT CONTROL LOGS (SCL) OR STRAW WADDLES. CONTRACTOR TO DETERMINE LOCATION OF CD WITHIN THE ROADSIDE DITCH (SEE TABLE FOR MIN. SPACING REQUIREMENTS) IN COORDINATION WITH COUNTY INSPECTORS.
9. NO ASPHALT OR CONCRETE BATCH PLANTS SHALL BE USED FOR THIS PROJECT.

KEY MAP
SCALE: 1" = 1000'

NORTH

NORTH

GRAPHIC SCALE IN FEET
0 50 100 200

| NO. | REVISION | BY | DATE | APPR. |
|---|---|---|---|---|

Kimley»Horn
2024 KIMLEY-HORN AND ASSOCIATES, INC.
2 North Nevada Avenue Suite 900
Colorado Springs, Colorado 80903 (719) 453-0180

DESIGNED BY: KRK
DRAWN BY: AJL
CHECKED BY: KRK
DATE: 08/01/2024

# OVERLOOK AT HOMESTEAD FILING NO. 1
EL PASO COUNTY, COLORADO
PRE DEVELOPMENT GESC PLAN
# GEC INITIAL PLAN

COLORADO LICENSED
KEVIN REX KOFFORD
57234
9/9/2024
PROFESSIONAL ENGINEER

PROJECT NO.
196239003

SHEET
1.4

k:\cos_civil\196239003_overlook\CADD\PlanSheets\EG\EG_GEC_INITIAL.dwg Kofford, Kevin 9/9/2024 1:09 PM

EPC 9/17/2024

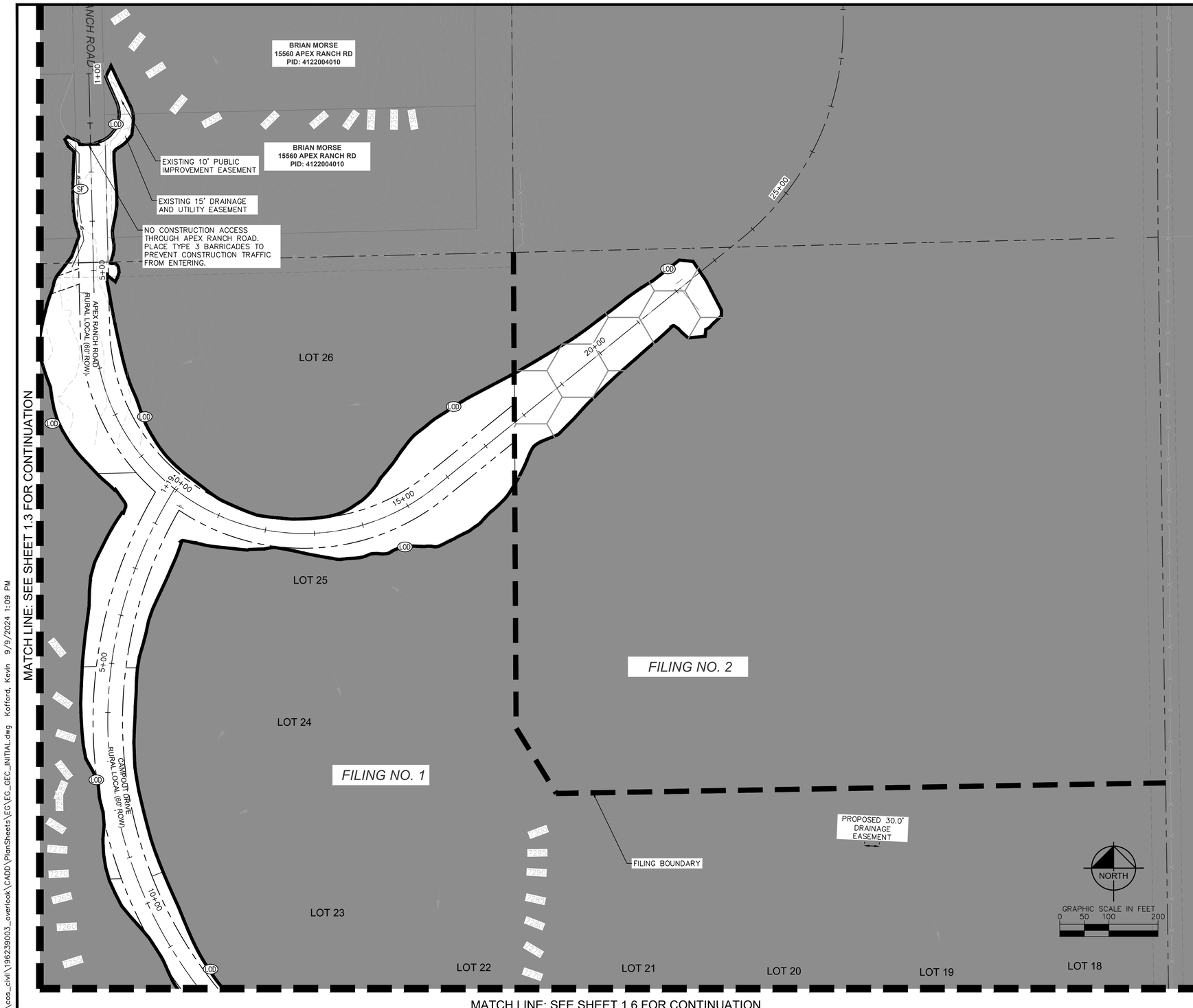


## LEGEND

- LOT BOUNDARY LINE
- LOT BOUNDARY LINE
- EXISTING MAJOR CONTOUR
- EXISTING MINOR CONTOUR
- PROPOSED MAJOR CONTOUR
- PROPOSED MINOR CONTOUR
- LOD — LIMITS OF CONSTRUCTION/DISTURBANCE
- SF — SILT FENCE
- CUT/FILL DEMARCATION
- SP — SOIL STOCKPILE
- SSA — STABILIZED STAGING AREA
- VTC — VEHICLE TRACKING CONTROL
- SM — SEEDING AND MULCHING
- TEMPORARY SEDIMENT BASIN
- FILING NO. 2 (NOT A PART OF THIS PLAN)
- ECB — EROSION CONTROL BLANKET (SEE NOTE 4)
- SM — SEEDING AND MULCHING
- EXISTING FLOW DIRECTION ARROW
- IP — INLET PROTECTION
- CD — CHECK DAM (SEE NOTE 8)
- CWA — CONCRETE WASHOUT

## NOTES

1. THE INTENT OF THIS PLAN IS TO IDENTIFY THE EROSION CONTROL PRACTICES RECOMMENDED. THE CONTRACTOR SHALL REFERENCE ADDITIONAL CONSTRUCTION PLANS FOR DEMOLITION OF EXISTING AND CONSTRUCTION OF PROPOSED IMPROVEMENTS.
2. TEMPORARY STABILIZATION (TS) SHALL BE IMPLEMENTED WITHIN THE DISTURBED PORTIONS OF THE PROJECT SITE NO LATER THAN 14 DAYS FOLLOWING THE CEASE OF CONSTRUCTION ACTIVITIES WITHIN THE DISTURBED AREAS.
3. PERMANENT STABILIZATION (PS) MAY BE USED WITHIN AREAS OF TEMPORARY STABILIZATION (TS) AT THE CONTRACTOR'S DISCRETION. STABILIZATION SHALL BE APPLIED IN ACCORDANCE WITH APPLICABLE TEMPORARY STABILIZATION SEQUENCING REQUIREMENTS.
4. CONTRACTOR SHALL UTILIZE ROLLED EROSION CONTROL PRODUCTS (STRAW-SINGLE NET EROSION CONTROL BLANKETS AND OPEN WEAVE TEXTILES) ON ALL SLOPES 3H:1V OR GREATER TO ACHIEVE REQUIRED STABILIZATION.
5. SILT FENCE TO BE INSTALLED PRIOR TO COMMENCEMENT OF ONSITE GRADING AND CONSTRUCTION ACTIVITIES.
6. DEMOLITION, REMOVAL, OVEREXCAVATION AND SOIL TREATMENT SHALL BE IN ACCORDANCE WITH THE GEOTECHNICAL ENGINEER RECOMMENDATIONS AS NOTED IN THE APPROVED PROJECT GEOTECHNICAL REPORT.
7. VEGETATION COVER IS ABOUT 90% CONSISTING OF NATIVE GRASSES, TREES AND SHRUBS, BASED ON VISUAL INSPECTION
8. ROCK CHECK DAMS (CD) MAY BE SUBSTITUTED FOR SEDIMENT CONTROL LOGS (SCL) OR STRAW WADDLES. CONTRACTOR TO DETERMINE LOCATION OF CD WITHIN THE ROADSIDE DITCH (SEE TABLE FOR MIN. SPACING REQUIREMENTS) IN COORDINATION WITH COUNTY INSPECTORS.
9. NO ASPHALT OR CONCRETE BATCH PLANTS SHALL BE USED FOR THIS PROJECT.

KEY MAP
SCALE: 1" = 1000'

NORTH

| NO. | REVISION | BY | DATE | APPR. |
|---|---|---|---|---|

Kimley»Horn
2024 KIMLEY-HORN AND ASSOCIATES, INC.
2 North Nevada Avenue Suite 900
Colorado Springs, Colorado 80903 (719) 453-0180

DESIGNED BY: KRK
DRAWN BY: AJL
CHECKED BY: KRK
DATE: 08/01/2024

# OVERLOOK AT HOMESTEAD FILING NO. 1
EL PASO COUNTY, COLORADO
PRE DEVELOPMENT GESC PLAN
# GEC INITIAL PLAN

COLORADO LICENSED
KEVIN REX KOFFORD
57234
9/5/2024
PROFESSIONAL ENGINEER

PROJECT NO.
196239003

SHEET
1.5

k:\cos_civil\196239003_overlook\CADD\PlanSheets\EG\EG_GEC_INITIAL.dwg Kofford, Kevin 9/9/2024 1:09 PM

EPC 9/17/2024

MATCH LINE: SEE SHEET 1.5 FOR CONTINUATION

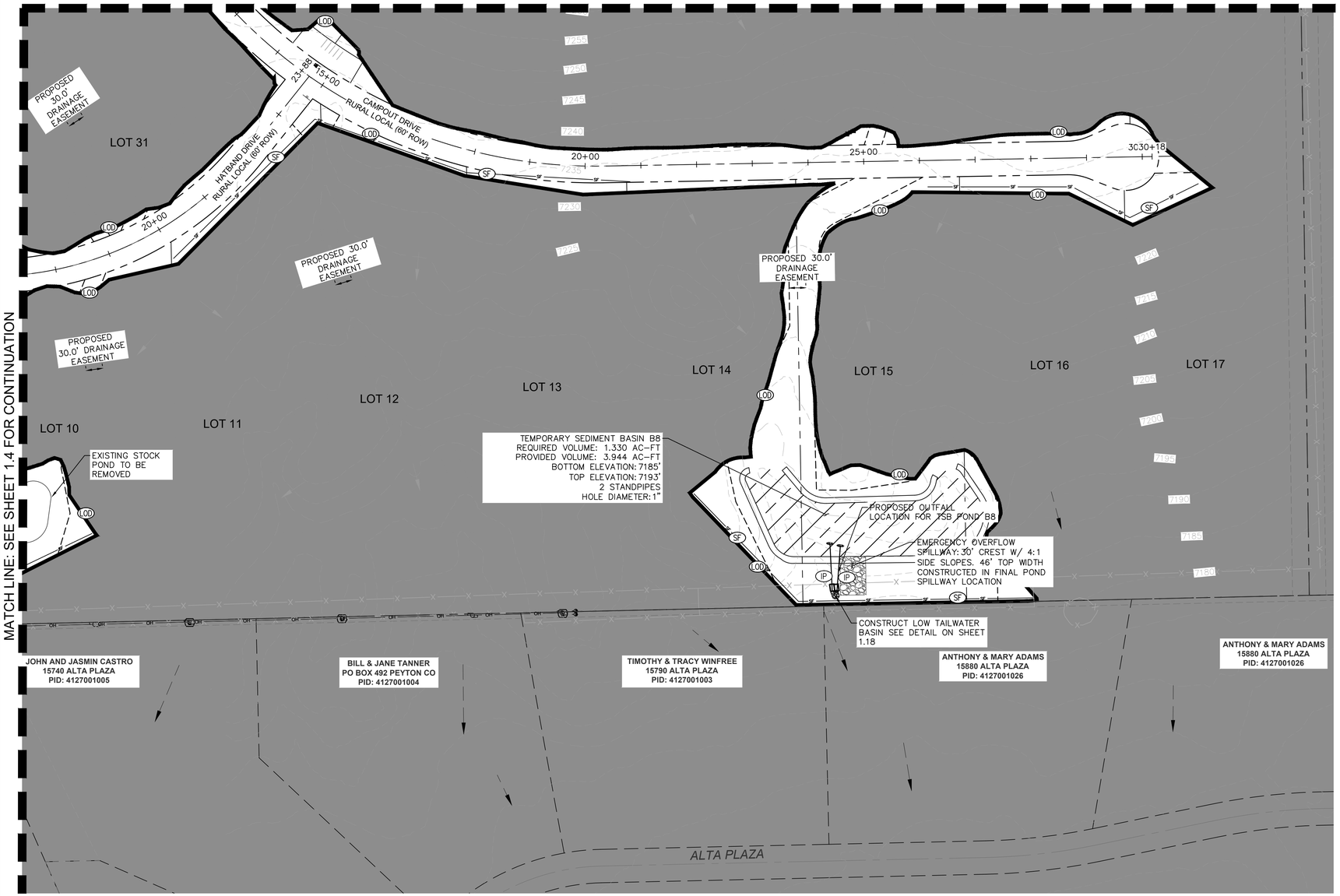


MATCH LINE: SEE SHEET 1.4 FOR CONTINUATION

NORTH

GRAPHIC SCALE IN FEET
0 50 100 200

## LEGEND

- LOT BOUNDARY LINE
- LOT BOUNDARY LINE
- EXISTING MAJOR CONTOUR
- EXISTING MINOR CONTOUR
- PROPOSED MAJOR CONTOUR
- PROPOSED MINOR CONTOUR
- LOD — LIMITS OF CONSTRUCTION/DISTURBANCE
- SF — SILT FENCE
- CUT/FILL DEMARCATION
- SP — SOIL STOCKPILE
- SSA — STABILIZED STAGING AREA
- VTC — VEHICLE TRACKING CONTROL
- SM — SEEDING AND MULCHING
- TEMPORARY SEDIMENT BASIN
- FILING NO. 2 (NOT A PART OF THIS PLAN)
- ECB — EROSION CONTROL BLANKET (SEE NOTE 4)
- SM — SEEDING AND MULCHING
- EXISTING FLOW DIRECTION ARROW
- IP — INLET PROTECTION
- CD — CHECK DAM (SEE NOTE 8)
- CWA — CONCRETE WASHOUT

## NOTES

1. THE INTENT OF THIS PLAN IS TO IDENTIFY THE EROSION CONTROL PRACTICES RECOMMENDED. THE CONTRACTOR SHALL REFERENCE ADDITIONAL CONSTRUCTION PLANS FOR DEMOLITION OF EXISTING AND CONSTRUCTION OF PROPOSED IMPROVEMENTS.
2. TEMPORARY STABILIZATION (TS) SHALL BE IMPLEMENTED WITHIN THE DISTURBED PORTIONS OF THE PROJECT SITE NO LATER THAN 14 DAYS FOLLOWING THE CEASE OF CONSTRUCTION ACTIVITIES WITHIN THE DISTURBED AREAS.
3. PERMANENT STABILIZATION (PS) MAY BE USED WITHIN AREAS OF TEMPORARY STABILIZATION (TS) AT THE CONTRACTOR'S DISCRETION. STABILIZATION SHALL BE APPLIED IN ACCORDANCE WITH APPLICABLE TEMPORARY STABILIZATION SEQUENCING REQUIREMENTS.
4. CONTRACTOR SHALL UTILIZE ROLLED EROSION CONTROL PRODUCTS (STRAW-SINGLE NET EROSION CONTROL BLANKETS AND OPEN WEAVE TEXTILES) ON ALL SLOPES 3H:1V OR GREATER TO ACHIEVE REQUIRED STABILIZATION.
5. SILT FENCE TO BE INSTALLED PRIOR TO COMMENCEMENT OF ONSITE GRADING AND CONSTRUCTION ACTIVITIES.
6. DEMOLITION, REMOVAL, OVEREXCAVATION AND SOIL TREATMENT SHALL BE IN ACCORDANCE WITH THE GEOTECHNICAL ENGINEER RECOMMENDATIONS AS NOTED IN THE APPROVED PROJECT GEOTECHNICAL REPORT.
7. VEGETATION COVER IS ABOUT 90% CONSISTING OF NATIVE GRASSES, TREES AND SHRUBS, BASED ON VISUAL INSPECTION
8. ROCK CHECK DAMS (CD) MAY BE SUBSTITUTED FOR SEDIMENT CONTROL LOGS (SCL) OR STRAW WADDLES. CONTRACTOR TO DETERMINE LOCATION OF CD WITHIN THE ROADSIDE DITCH (SEE TABLE FOR MIN. SPACING REQUIREMENTS) IN COORDINATION WITH COUNTY INSPECTORS.
9. NO ASPHALT OR CONCRETE BATCH PLANTS SHALL BE USED FOR THIS PROJECT.

KEY MAP
SCALE: 1" = 1000'

NORTH

| NO. | REVISION | BY | DATE | APPR. |
|---|---|---|---|---|

Kimley»Horn
2024 KIMLEY-HORN AND ASSOCIATES, INC.
2 North Nevada Avenue Suite 900
Colorado Springs, Colorado 80903 (719) 453-0180

DESIGNED BY: KRK
DRAWN BY: AJL
CHECKED BY: KRK
DATE: 08/01/2024

OVERLOOK AT HOMESTEAD FILING NO. 1
EL PASO COUNTY, COLORADO
PRE DEVELOPMENT GESC PLAN
# GEC INITIAL PLAN

COLORADO LICENSED
KEVIN REX KOFFORD
57234
9/9/2024
PROFESSIONAL ENGINEER

PROJECT NO.
196239003

SHEET
1.6

k:\cos_civil\196239003_overlook\CADD\PlanSheets\EG\EG_GEC_INITIAL.dwg Kofford, Kevin 9/9/2024 1:09 PM

EPC 9/17/2024

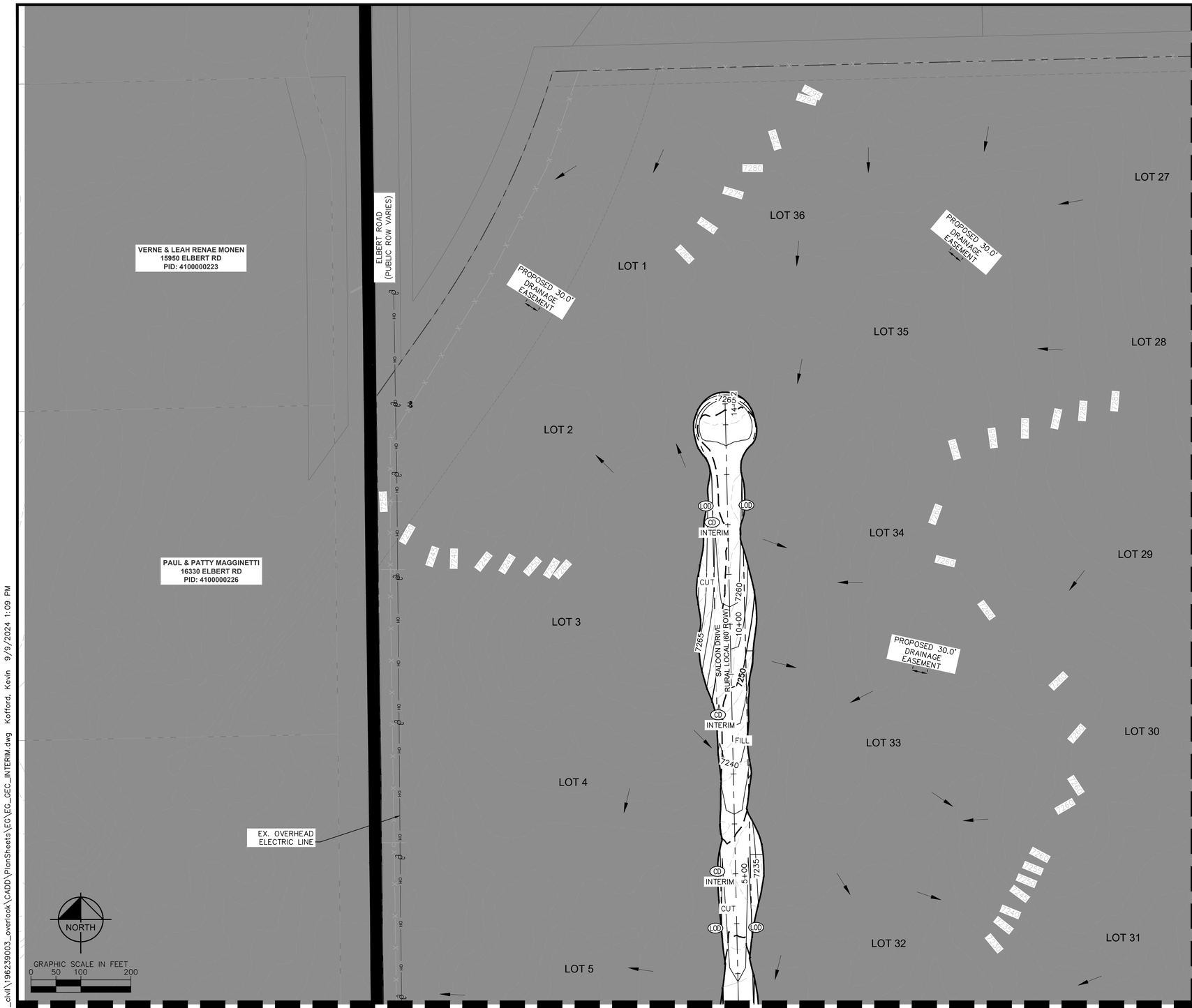


MATCH LINE: SEE SHEET 1.8 FOR CONTINUATION

MATCH LINE: SEE SHEET 1.9 FOR CONTINUATION

## LEGEND

- LOT BOUNDARY LINE
- LOT BOUNDARY LINE
- EXISTING MAJOR CONTOUR
- EXISTING MINOR CONTOUR
- PROPOSED MAJOR CONTOUR
- PROPOSED MINOR CONTOUR
- (LOD) LIMITS OF CONSTRUCTION/DISTURBANCE
- (SF) SILT FENCE
- CUT/FILL DEMARCATION
- (SP) SOIL STOCKPILE
- (SSA) STABILIZED STAGING AREA
- (VTC) VEHICLE TRACKING CONTROL
- (SM) SEEDING AND MULCHING
- TEMPORARY SEDIMENT BASIN
- FILING NO. 2 (NOT A PART OF THIS PLAN)
- (ECB) EROSION CONTROL BLANKET (SEE NOTE 4)
- (SM) SEEDING AND MULCHING
- EXISTING FLOW DIRECTION ARROW
- (IP) INLET PROTECTION
- (CD) CHECK DAM (SEE NOTE 8)
- (CWA) CONCRETE WASHOUT

## NOTES

1. THE INTENT OF THIS PLAN IS TO IDENTIFY THE EROSION CONTROL PRACTICES RECOMMENDED. THE CONTRACTOR SHALL REFERENCE ADDITIONAL CONSTRUCTION PLANS FOR DEMOLITION OF EXISTING AND CONSTRUCTION OF PROPOSED IMPROVEMENTS.
2. TEMPORARY STABILIZATION (TS) SHALL BE IMPLEMENTED WITHIN THE DISTURBED PORTIONS OF THE PROJECT SITE NO LATER THAN 14 DAYS FOLLOWING THE CEASE OF CONSTRUCTION ACTIVITIES WITHIN THE DISTURBED AREAS.
3. PERMANENT STABILIZATION (PS) MAY BE USED WITHIN AREAS OF TEMPORARY STABILIZATION (TS) AT THE CONTRACTOR'S DISCRETION. STABILIZATION SHALL BE APPLIED IN ACCORDANCE WITH APPLICABLE TEMPORARY STABILIZATION SEQUENCING REQUIREMENTS.
4. CONTRACTOR SHALL UTILIZE ROLLED EROSION CONTROL PRODUCTS (STRAW-SINGLE NET EROSION CONTROL BLANKETS AND OPEN WEAVE TEXTILES) ON ALL SLOPES 3H:1V OR GREATER TO ACHIEVE REQUIRED STABILIZATION.
5. SILT FENCE TO BE INSTALLED PRIOR TO COMMENCEMENT OF ONSITE GRADING AND CONSTRUCTION ACTIVITIES.
6. DEMOLITION, REMOVAL, OVEREXCAVATION AND SOIL TREATMENT SHALL BE IN ACCORDANCE WITH THE GEOTECHNICAL ENGINEER RECOMMENDATIONS AS NOTED IN THE APPROVED PROJECT GEOTECHNICAL REPORT.
7. VEGETATION COVER IS ABOUT 90% CONSISTING OF NATIVE GRASSES, TREES AND SHRUBS, BASED ON VISUAL INSPECTION
8. ROCK CHECK DAMS (CD) MAY BE SUBSTITUTED FOR SEDIMENT CONTROL LOGS (SCL) OR STRAW WADDLES. CONTRACTOR TO DETERMINE LOCATION OF CD WITHIN THE ROADSIDE DITCH (SEE TABLE FOR MIN. SPACING REQUIREMENTS) IN COORDINATION WITH COUNTY INSPECTORS.
10. NO ASPHALT OR CONCRETE BATCH PLANTS SHALL BE USED FOR THIS PROJECT.

| SIZE OF SCL (STRAW WADDLE) | SPACING (PER VERTICAL FEET OF FALL) |
|---|---|
| 9 INCH | 1.5 FEET |
| 12 INCH | 2 FEET |
| 16 INCH | 2.67 FEET |

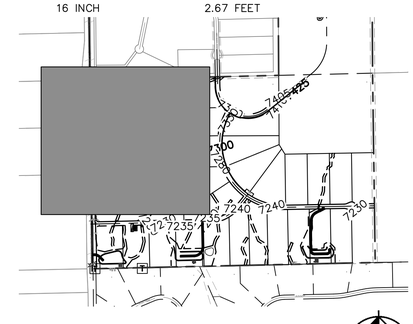


KEY MAP
SCALE: 1" = 1000'

NORTH

| NO. | REVISION | BY | DATE | APPR. |
|---|---|---|---|---|

Kimley»Horn
2024 KIMLEY-HORN AND ASSOCIATES, INC.
2 North Nevada Avenue Suite 900
Colorado Springs, Colorado 80903 (719) 453-0180

DESIGNED BY: KRK
DRAWN BY: AJL
CHECKED BY: KRK
DATE: 08/01/2024

OVERLOOK AT HOMESTEAD FILING NO. 1
EL PASO COUNTY, COLORADO
PRE DEVELOPMENT GESC PLAN
# GEC INTERIM PLAN

COLORADO LICENSED PROFESSIONAL ENGINEER KEVIN REX KOFFORD 57234 9/9/2024

PROJECT NO.
196239003

SHEET
1.7

k:\cos_civil\196239003_overlook\CADD\PlanSheets\EG\EG_GEC_INTERIM.dwg Kofford, Kevin 9/9/2024 1:09 PM

EPC 9/17/2024

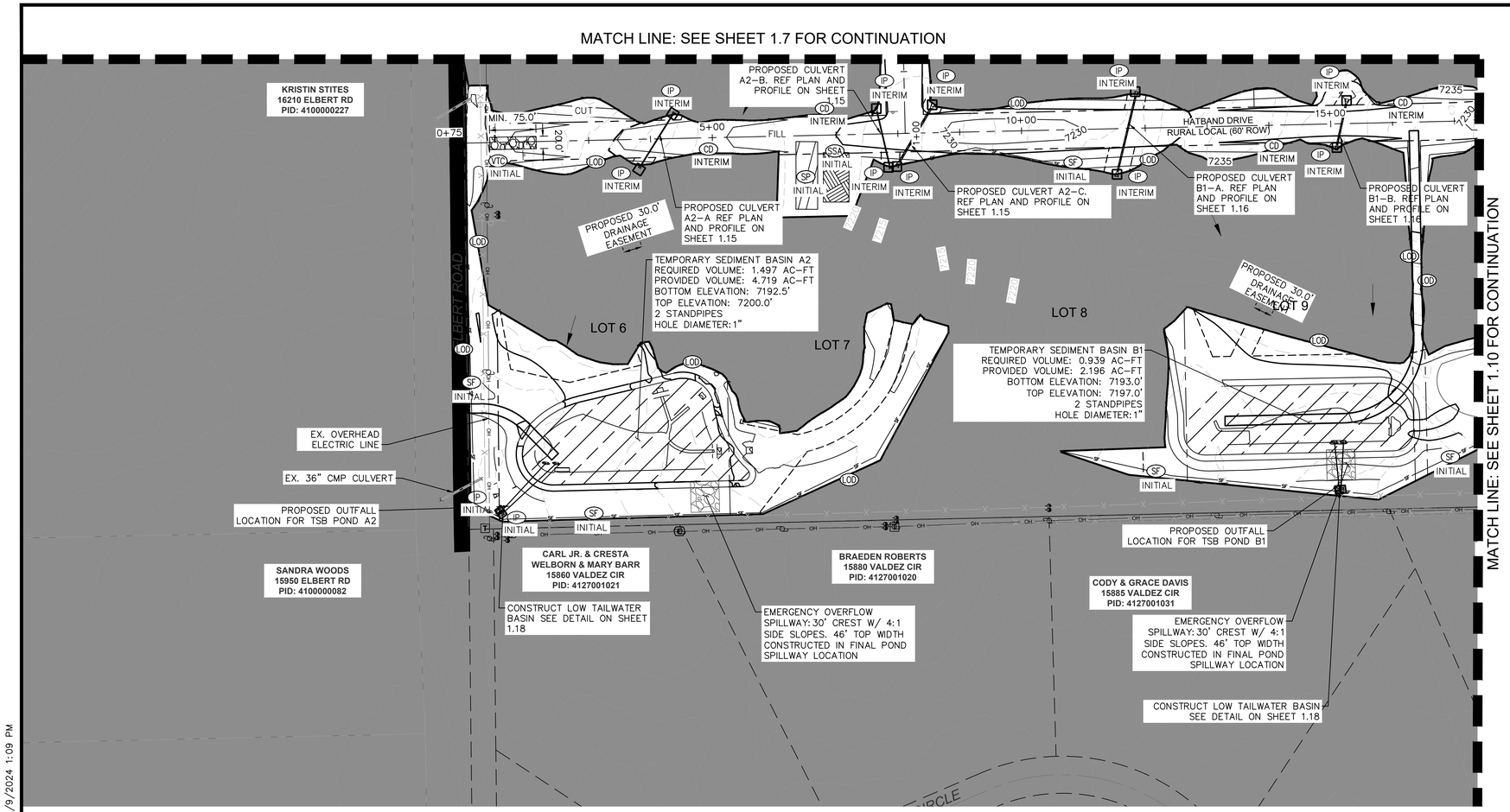


## LEGEND

- LOT BOUNDARY LINE
- LOT BOUNDARY LINE
- EXISTING MAJOR CONTOUR
- EXISTING MINOR CONTOUR
- PROPOSED MAJOR CONTOUR
- PROPOSED MINOR CONTOUR
- LOD — LIMITS OF CONSTRUCTION/DISTURBANCE
- SF — SILT FENCE
- CUT/FILL DEMARCATION
- SP — SOIL STOCKPILE
- SSA — STABILIZED STAGING AREA
- VTC — VEHICLE TRACKING CONTROL
- SM — SEEDING AND MULCHING
- TEMPORARY SEDIMENT BASIN
- FILING NO. 2 (NOT A PART OF THIS PLAN)
- ECB — EROSION CONTROL BLANKET (SEE NOTE 4)
- SM — SEEDING AND MULCHING
- EXISTING FLOW DIRECTION ARROW
- IP — INLET PROTECTION
- CD — CHECK DAM (SEE NOTE 8)
- CWA — CONCRETE WASHOUT

## NOTES

1. THE INTENT OF THIS PLAN IS TO IDENTIFY THE EROSION CONTROL PRACTICES RECOMMENDED. THE CONTRACTOR SHALL REFERENCE ADDITIONAL CONSTRUCTION PLANS FOR DEMOLITION OF EXISTING AND CONSTRUCTION OF PROPOSED IMPROVEMENTS.
2. TEMPORARY STABILIZATION (TS) SHALL BE IMPLEMENTED WITHIN THE DISTURBED PORTIONS OF THE PROJECT SITE NO LATER THAN 14 DAYS FOLLOWING THE CEASE OF CONSTRUCTION ACTIVITIES WITHIN THE DISTURBED AREAS.
3. PERMANENT STABILIZATION (PS) MAY BE USED WITHIN AREAS OF TEMPORARY STABILIZATION (TS) AT THE CONTRACTOR'S DISCRETION. STABILIZATION SHALL BE APPLIED IN ACCORDANCE WITH APPLICABLE TEMPORARY STABILIZATION SEQUENCING REQUIREMENTS.
4. CONTRACTOR SHALL UTILIZE ROLLED EROSION CONTROL PRODUCTS (STRAW-SINGLE NET EROSION CONTROL BLANKETS AND OPEN WEAVE TEXTILES) ON ALL SLOPES 3H:1V OR GREATER TO ACHIEVE REQUIRED STABILIZATION.
5. SILT FENCE TO BE INSTALLED PRIOR TO COMMENCEMENT OF ONSITE GRADING AND CONSTRUCTION ACTIVITIES.
6. DEMOLITION, REMOVAL, OVEREXCAVATION AND SOIL TREATMENT SHALL BE IN ACCORDANCE WITH THE GEOTECHNICAL ENGINEER RECOMMENDATIONS AS NOTED IN THE APPROVED PROJECT GEOTECHNICAL REPORT.
7. VEGETATION COVER IS ABOUT 90% CONSISTING OF NATIVE GRASSES, TREES AND SHRUBS, BASED ON VISUAL INSPECTION
8. ROCK CHECK DAMS (CD) MAY BE SUBSTITUTED FOR SEDIMENT CONTROL LOGS (SCL) OR STRAW WADDLES. CONTRACTOR TO DETERMINE LOCATION OF CD WITHIN THE ROADSIDE DITCH (SEE TABLE FOR MIN. SPACING REQUIREMENTS) IN COORDINATION WITH COUNTY INSPECTORS.
10. NO ASPHALT OR CONCRETE BATCH PLANTS SHALL BE USED FOR THIS PROJECT.

| SIZE OF SCL (STRAW WADDLE) | SPACING (PER VERTICAL FEET OF FALL) |
|---|---|
| 9 INCH | 1.5 FEET |
| 12 INCH | 2 FEET |
| 16 INCH | 2.67 FEET |

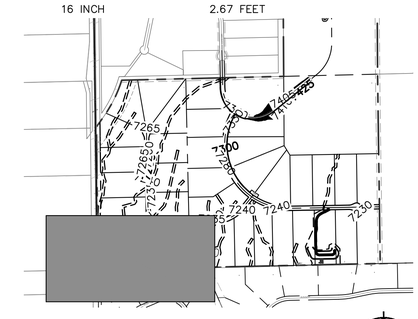


KEY MAP
SCALE: 1" = 1000'

NORTH

| NO. | REVISION | BY | DATE | APPR. |
|---|---|---|---|---|

Kimley»Horn
2024 KIMLEY-HORN AND ASSOCIATES, INC.
2 North Nevada Avenue Suite 900
Colorado Springs, Colorado 80903 (719) 453-0180

DESIGNED BY: KRK
DRAWN BY: AJL
CHECKED BY: KRK
DATE: 08/01/2024

OVERLOOK AT HOMESTEAD FILING NO. 1
EL PASO COUNTY, COLORADO
PRE DEVELOPMENT GESC PLAN
# GEC INTERIM PLAN

COLORADO LICENSED
KRISTIN REX KOFFORD
57234
9/9/2024
PROFESSIONAL ENGINEER

PROJECT NO.
196239003

SHEET
1.8

k:\cos_civil\196239003_overlook\CADD\PlanSheets\EG\EG_GEC_INTERIM.dwg Kofford, Kevin 9/9/2024 1:09 PM

EPC 9/17/2024

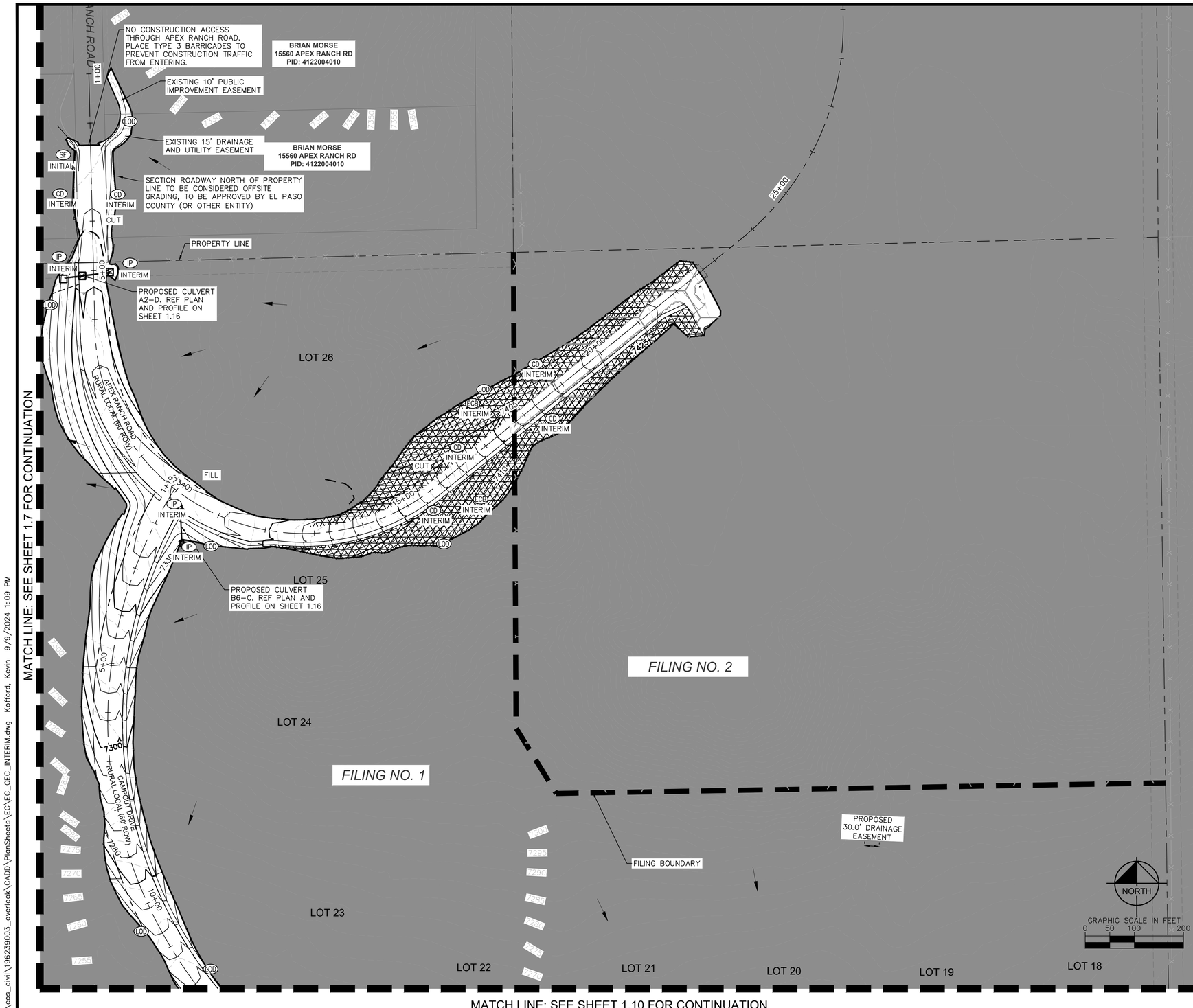


## LEGEND

- LOT BOUNDARY LINE
- LOT BOUNDARY LINE
- EXISTING MAJOR CONTOUR
- EXISTING MINOR CONTOUR
- PROPOSED MAJOR CONTOUR
- PROPOSED MINOR CONTOUR
- (LOD) LIMITS OF CONSTRUCTION/DISTURBANCE
- (SF) SILT FENCE
- CUT/FILL DEMARCATION
- (SP) SOIL STOCKPILE
- (SSA) STABILIZED STAGING AREA
- (VTC) VEHICLE TRACKING CONTROL
- (SM) SEEDING AND MULCHING
- TEMPORARY SEDIMENT BASIN
- FILING NO. 2 (NOT A PART OF THIS PLAN)
- (ECB) EROSION CONTROL BLANKET (SEE NOTE 4)
- (SM) SEEDING AND MULCHING
- EXISTING FLOW DIRECTION ARROW
- (IP) INLET PROTECTION
- (CD) CHECK DAM (SEE NOTE 8)
- (CWA) CONCRETE WASHOUT

## NOTES

1. THE INTENT OF THIS PLAN IS TO IDENTIFY THE EROSION CONTROL PRACTICES RECOMMENDED. THE CONTRACTOR SHALL REFERENCE ADDITIONAL CONSTRUCTION PLANS FOR DEMOLITION OF EXISTING AND CONSTRUCTION OF PROPOSED IMPROVEMENTS.
2. TEMPORARY STABILIZATION (TS) SHALL BE IMPLEMENTED WITHIN THE DISTURBED PORTIONS OF THE PROJECT SITE NO LATER THAN 14 DAYS FOLLOWING THE CEASE OF CONSTRUCTION ACTIVITIES WITHIN THE DISTURBED AREAS.
3. PERMANENT STABILIZATION (PS) MAY BE USED WITHIN AREAS OF TEMPORARY STABILIZATION (TS) AT THE CONTRACTOR'S DISCRETION. STABILIZATION SHALL BE APPLIED IN ACCORDANCE WITH APPLICABLE TEMPORARY STABILIZATION SEQUENCING REQUIREMENTS.
4. CONTRACTOR SHALL UTILIZE ROLLED EROSION CONTROL PRODUCTS (STRAW-SINGLE NET EROSION CONTROL BLANKETS AND OPEN WEAVE TEXTILES) ON ALL SLOPES 3H:1V OR GREATER TO ACHIEVE REQUIRED STABILIZATION.
5. SILT FENCE TO BE INSTALLED PRIOR TO COMMENCEMENT OF ONSITE GRADING AND CONSTRUCTION ACTIVITIES.
6. DEMOLITION, REMOVAL, OVEREXCAVATION AND SOIL TREATMENT SHALL BE IN ACCORDANCE WITH THE GEOTECHNICAL ENGINEER RECOMMENDATIONS AS NOTED IN THE APPROVED PROJECT GEOTECHNICAL REPORT.
7. VEGETATION COVER IS ABOUT 90% CONSISTING OF NATIVE GRASSES, TREES AND SHRUBS, BASED ON VISUAL INSPECTION
8. ROCK CHECK DAMS (CD) MAY BE SUBSTITUTED FOR SEDIMENT CONTROL LOGS (SCL) OR STRAW WADDLES. CONTRACTOR TO DETERMINE LOCATION OF CD WITHIN THE ROADSIDE DITCH (SEE TABLE FOR MIN. SPACING REQUIREMENTS) IN COORDINATION WITH COUNTY INSPECTORS.
10. NO ASPHALT OR CONCRETE BATCH PLANTS SHALL BE USED FOR THIS PROJECT.

| SIZE OF SCL (STRAW WADDLE) | SPACING (PER VERTICAL FEET OF FALL) |
|---|---|
| 9 INCH | 1.5 FEET |
| 12 INCH | 2 FEET |
| 16 INCH | 2.67 FEET |

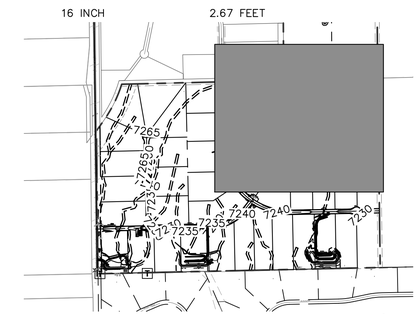


KEY MAP
SCALE: 1" = 1000'

NORTH

| NO. | REVISION | BY | DATE | APPR. |
|---|---|---|---|---|

Kimley»Horn
2024 KIMLEY-HORN AND ASSOCIATES, INC.
2 North Nevada Avenue Suite 900
Colorado Springs, Colorado 80903 (719) 453-0180

DESIGNED BY: KRK
DRAWN BY: AJL
CHECKED BY: KRK
DATE: 08/01/2024

# OVERLOOK AT HOMESTEAD FILING NO. 1
EL PASO COUNTY, COLORADO
PRE DEVELOPMENT GESC PLAN
# GEC INTERIM PLAN

COLORADO LICENSED
KRISTIN RAE KOFFORD
57234
9/9/2024
PROFESSIONAL ENGINEER

PROJECT NO.
196239003

SHEET
1.9

k:\cos_civil\196239003_overlook\CADD\PlanSheets\EG\EG_GEC_INTERIM.dwg Kofford, Kevin 9/9/2024 1:09 PM

EPC 9/17/2024

MATCH LINE: SEE SHEET 1.9 FOR CONTINUATION

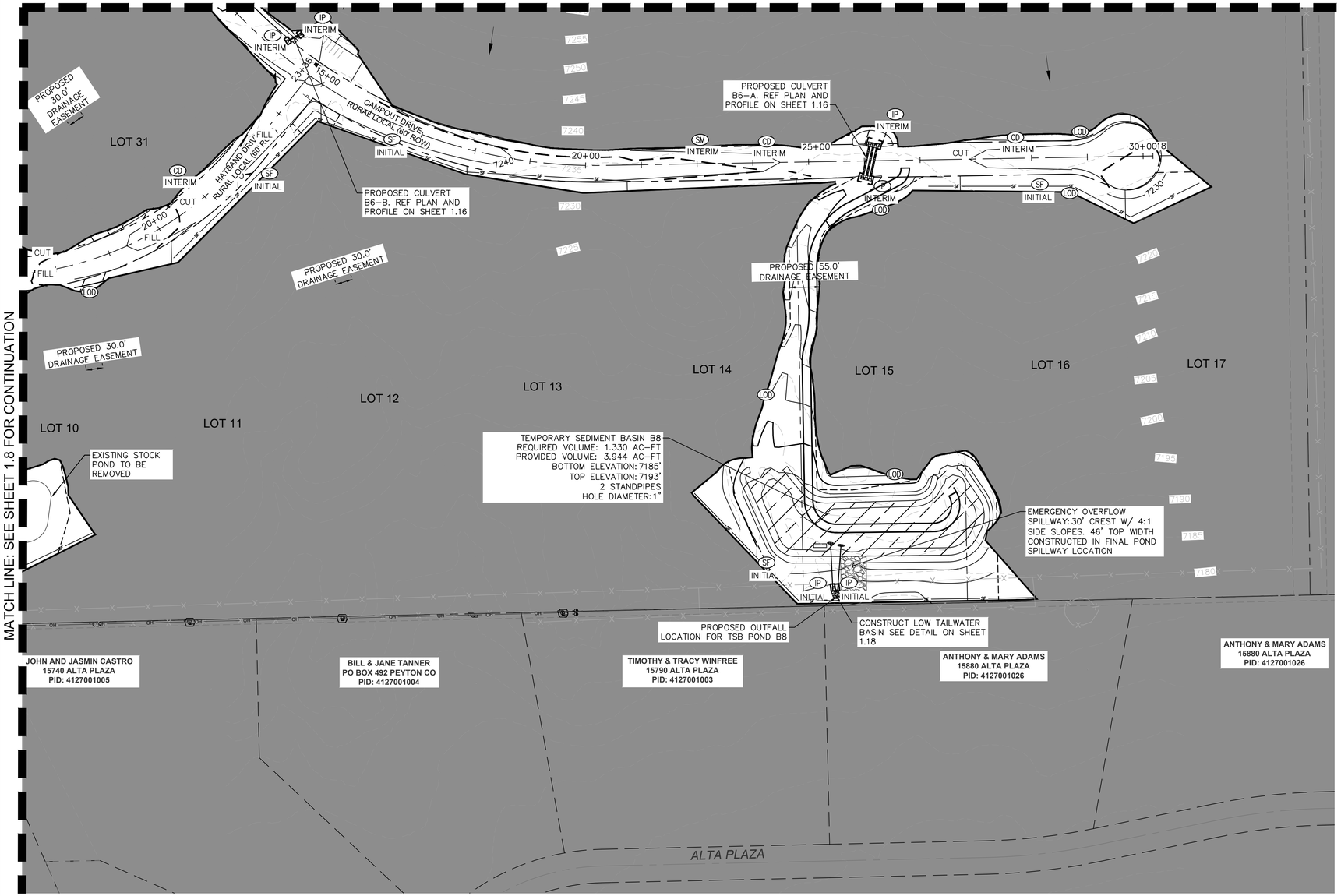


NORTH

GRAPHIC SCALE IN FEET
0 50 100 200

## LEGEND

- LOT BOUNDARY LINE
- LOT BOUNDARY LINE
- EXISTING MAJOR CONTOUR
- EXISTING MINOR CONTOUR
- PROPOSED MAJOR CONTOUR
- PROPOSED MINOR CONTOUR
- (LOD) LIMITS OF CONSTRUCTION/DISTURBANCE
- (SF) SILT FENCE
- CUT/FILL DEMARCATION
- (SP) SOIL STOCKPILE
- (SSA) STABILIZED STAGING AREA
- (VTC) VEHICLE TRACKING CONTROL
- (SM) SEEDING AND MULCHING
- TEMPORARY SEDIMENT BASIN
- FILING NO. 2 (NOT A PART OF THIS PLAN)
- (ECB) EROSION CONTROL BLANKET (SEE NOTE 4)
- (SM) SEEDING AND MULCHING
- EXISTING FLOW DIRECTION ARROW
- (IP) INLET PROTECTION
- (CD) CHECK DAM (SEE NOTE 8)
- (CWA) CONCRETE WASHOUT

## NOTES

1. THE INTENT OF THIS PLAN IS TO IDENTIFY THE EROSION CONTROL PRACTICES RECOMMENDED. THE CONTRACTOR SHALL REFERENCE ADDITIONAL CONSTRUCTION PLANS FOR DEMOLITION OF EXISTING AND CONSTRUCTION OF PROPOSED IMPROVEMENTS.
2. TEMPORARY STABILIZATION (TS) SHALL BE IMPLEMENTED WITHIN THE DISTURBED PORTIONS OF THE PROJECT SITE NO LATER THAN 14 DAYS FOLLOWING THE CEASE OF CONSTRUCTION ACTIVITIES WITHIN THE DISTURBED AREAS.
3. PERMANENT STABILIZATION (PS) MAY BE USED WITHIN AREAS OF TEMPORARY STABILIZATION (TS) AT THE CONTRACTOR'S DISCRETION. STABILIZATION SHALL BE APPLIED IN ACCORDANCE WITH APPLICABLE TEMPORARY STABILIZATION SEQUENCING REQUIREMENTS.
4. CONTRACTOR SHALL UTILIZE ROLLED EROSION CONTROL PRODUCTS (STRAW-SINGLE NET EROSION CONTROL BLANKETS AND OPEN WEAVE TEXTILES) ON ALL SLOPES 3H:1V OR GREATER TO ACHIEVE REQUIRED STABILIZATION.
5. SILT FENCE TO BE INSTALLED PRIOR TO COMMENCEMENT OF ONSITE GRADING AND CONSTRUCTION ACTIVITIES.
6. DEMOLITION, REMOVAL, OVEREXCAVATION AND SOIL TREATMENT SHALL BE IN ACCORDANCE WITH THE GEOTECHNICAL ENGINEER RECOMMENDATIONS AS NOTED IN THE APPROVED PROJECT GEOTECHNICAL REPORT.
7. VEGETATION COVER IS ABOUT 90% CONSISTING OF NATIVE GRASSES, TREES AND SHRUBS, BASED ON VISUAL INSPECTION
8. ROCK CHECK DAMS (CD) MAY BE SUBSTITUTED FOR SEDIMENT CONTROL LOGS (SCL) OR STRAW WADDLES. CONTRACTOR TO DETERMINE LOCATION OF CD WITHIN THE ROADSIDE DITCH (SEE TABLE FOR MIN. SPACING REQUIREMENTS) IN COORDINATION WITH COUNTY INSPECTORS.
10. NO ASPHALT OR CONCRETE BATCH PLANTS SHALL BE USED FOR THIS PROJECT.

| SIZE OF SCL (STRAW WADDLE) | SPACING (PER VERTICAL FEET OF FALL) |
|---|---|
| 9 INCH | 1.5 FEET |
| 12 INCH | 2 FEET |
| 16 INCH | 2.67 FEET |

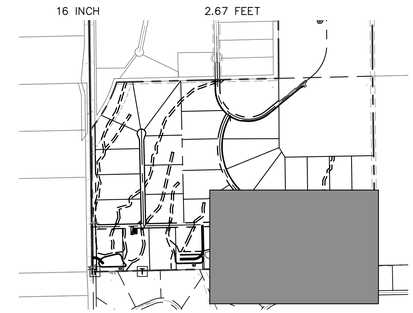

KEY MAP
SCALE: 1" = 1000'

NORTH

| NO. | REVISION | BY | DATE | APPR. |
|---|---|---|---|---|

Kimley»Horn
2024 KIMLEY-HORN AND ASSOCIATES, INC.
2 North Nevada Avenue Suite 900
Colorado Springs, Colorado 80903 (719) 453-0180

DESIGNED BY: KRK
DRAWN BY: AJL
CHECKED BY: KRK
DATE: 08/01/2024

OVERLOOK AT HOMESTEAD FILING NO. 1
EL PASO COUNTY, COLORADO
PRE DEVELOPMENT GESC PLAN
# GEC INTERIM PLAN

COLORADO LICENSED
KRISTIN REX KOFFORD
57234
9/9/2024
PROFESSIONAL ENGINEER

PROJECT NO.
196239003

SHEET
1.10

k:\cos_civil\196239003_overlook\CADD\PlanSheets\EG\EG_GEC_INTERIM.dwg Kofford, Kevin 9/9/2024 1:09 PM

EPC 9/17/2024

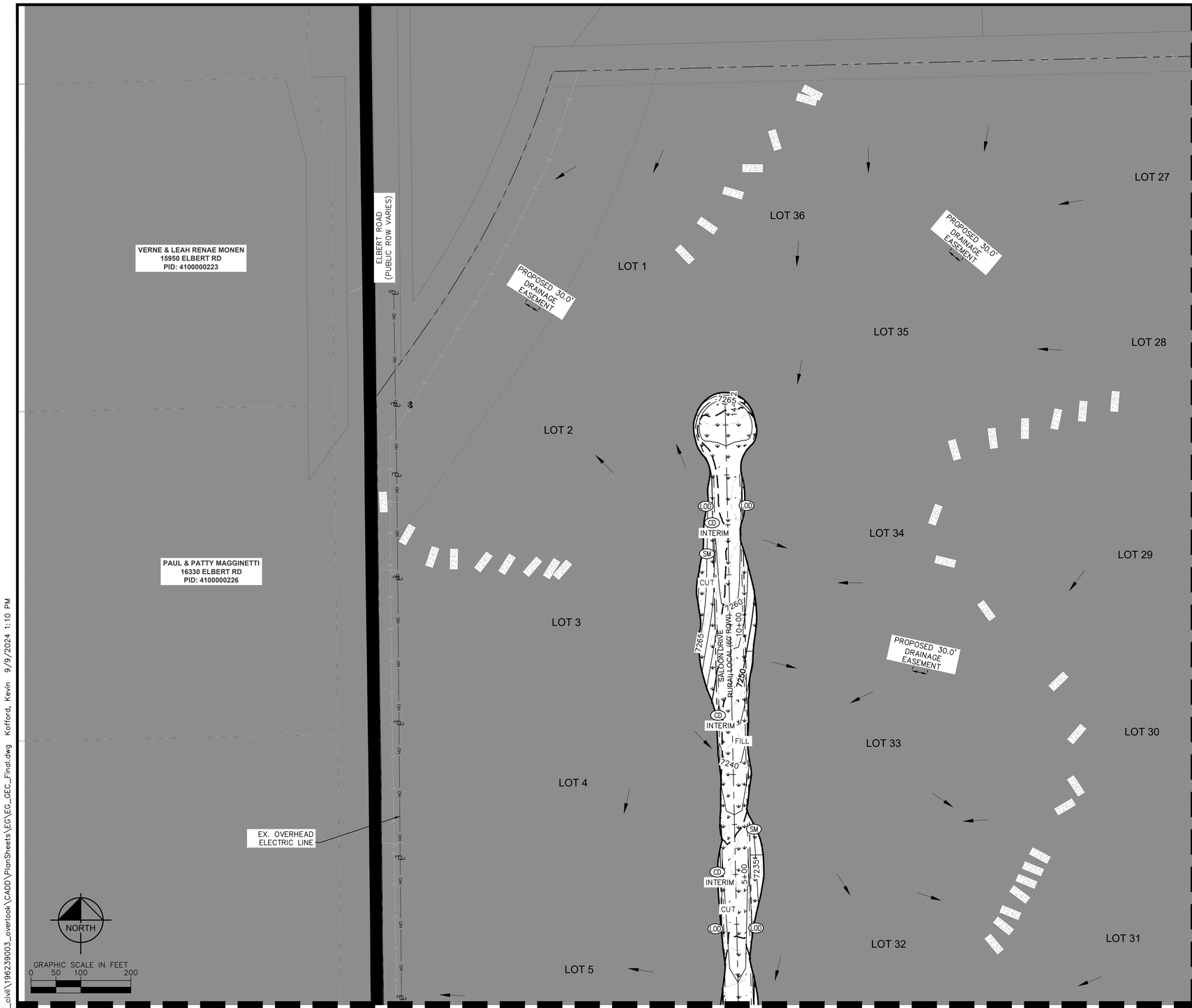


MATCH LINE: SEE SHEET 1.8 FOR CONTINUATION

MATCH LINE: SEE SHEET 1.9 FOR CONTINUATION

## LEGEND

- LOT BOUNDARY LINE
- LOT BOUNDARY LINE
- EXISTING MAJOR CONTOUR
- EXISTING MINOR CONTOUR
- PROPOSED MAJOR CONTOUR
- PROPOSED MINOR CONTOUR
- (LOD) LIMITS OF CONSTRUCTION/DISTURBANCE
- (SF) SILT FENCE
- CUT/FILL DEMARCATION
- (SP) SOIL STOCKPILE
- (SSA) STABILIZED STAGING AREA
- (VTC) VEHICLE TRACKING CONTROL
- (SM) SEEDING AND MULCHING (SEE NOTE 2 & 3)
- TEMPORARY SEDIMENT BASIN
- FILING NO. 2 (NOT A PART OF THIS PLAN)
- (ECB) EROSION CONTROL BLANKET (SEE NOTE 4)
- (SM) SEEDING AND MULCHING
- EXISTING FLOW DIRECTION ARROW
- (IP) INLET PROTECTION
- (CD) CHECK DAM (SEE NOTE 8)
- (CWA) CONCRETE WASHOUT

## NOTES

1. THE INTENT OF THIS PLAN IS TO IDENTIFY THE EROSION CONTROL PRACTICES RECOMMENDED. THE CONTRACTOR SHALL REFERENCE ADDITIONAL CONSTRUCTION PLANS FOR DEMOLITION OF EXISTING AND CONSTRUCTION OF PROPOSED IMPROVEMENTS.
2. TEMPORARY STABILIZATION (TS) SHALL BE IMPLEMENTED WITHIN THE DISTURBED PORTIONS OF THE PROJECT SITE NO LATER THAN 14 DAYS FOLLOWING THE CEASE OF CONSTRUCTION ACTIVITIES WITHIN THE DISTURBED AREAS.
3. PERMANENT STABILIZATION (PS) MAY BE USED WITHIN AREAS OF TEMPORARY STABILIZATION (TS) AT THE CONTRACTOR'S DISCRETION. STABILIZATION SHALL BE APPLIED IN ACCORDANCE WITH APPLICABLE TEMPORARY STABILIZATION SEQUENCING REQUIREMENTS.
4. CONTRACTOR SHALL UTILIZE ROLLED EROSION CONTROL PRODUCTS (STRAW-SINGLE NET EROSION CONTROL BLANKETS AND OPEN WEAVE TEXTILES) ON ALL SLOPES 3H:1V OR GREATER TO ACHIEVE REQUIRED STABILIZATION.
5. SILT FENCE TO BE INSTALLED PRIOR TO COMMENCEMENT OF ONSITE GRADING AND CONSTRUCTION ACTIVITIES.
6. DEMOLITION, REMOVAL, OVEREXCAVATION AND SOIL TREATMENT SHALL BE IN ACCORDANCE WITH THE GEOTECHNICAL ENGINEER RECOMMENDATIONS AS NOTED IN THE APPROVED PROJECT GEOTECHNICAL REPORT.
7. VEGETATION COVER IS ABOUT 90% CONSISTING OF NATIVE GRASSES, TREES AND SHRUBS, BASED ON VISUAL INSPECTION
8. ROCK CHECK DAMS (CD) MAY BE SUBSTITUTED FOR SEDIMENT CONTROL LOGS (SCL) OR STRAW WADDLES. CONTRACTOR TO DETERMINE LOCATION OF CD WITHIN THE ROADSIDE DITCH (SEE TABLE FOR MIN. SPACING REQUIREMENTS) IN COORDINATION WITH COUNTY INSPECTORS.
10. NO ASPHALT OR CONCRETE BATCH PLANTS SHALL BE USED FOR THIS PROJECT.

| SIZE OF SCL (STRAW WADDLE) | SPACING (PER VERTICAL FEET OF FALL) |
|---|---|
| 9 INCH | 1.5 FEET |
| 12 INCH | 2 FEET |
| 16 INCH | 2.67 FEET |

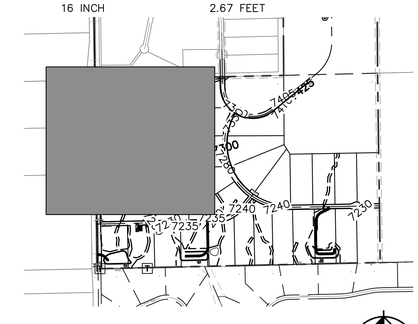


KEY MAP
SCALE: 1" = 1000'

NORTH

| NO. | REVISION | BY | DATE | APPR. |
|---|---|---|---|---|

Kimley»Horn
2024 KIMLEY-HORN AND ASSOCIATES, INC.
2 North Nevada Avenue Suite 900
Colorado Springs, Colorado 80903 (719) 453-0180

DESIGNED BY: KRK
DRAWN BY: AJL
CHECKED BY: KRK
DATE: 08/01/2024

OVERLOOK AT HOMESTEAD FILING NO. 1
EL PASO COUNTY, COLORADO
PRE DEVELOPMENT GESC PLAN
# GEC FINAL PLAN

COLORADO LICENSED PROFESSIONAL ENGINEER KEVIN REX KOFFORD 57234 9/17/2024

PROJECT NO.
196239003

SHEET
1.11

k:\cos_civil\196239003_overlook\CADD\PlanSheets\EG\EG_GEC_Final.dwg Kofford, Kevin 9/9/2024 1:10 PM

EPC 9/17/2024

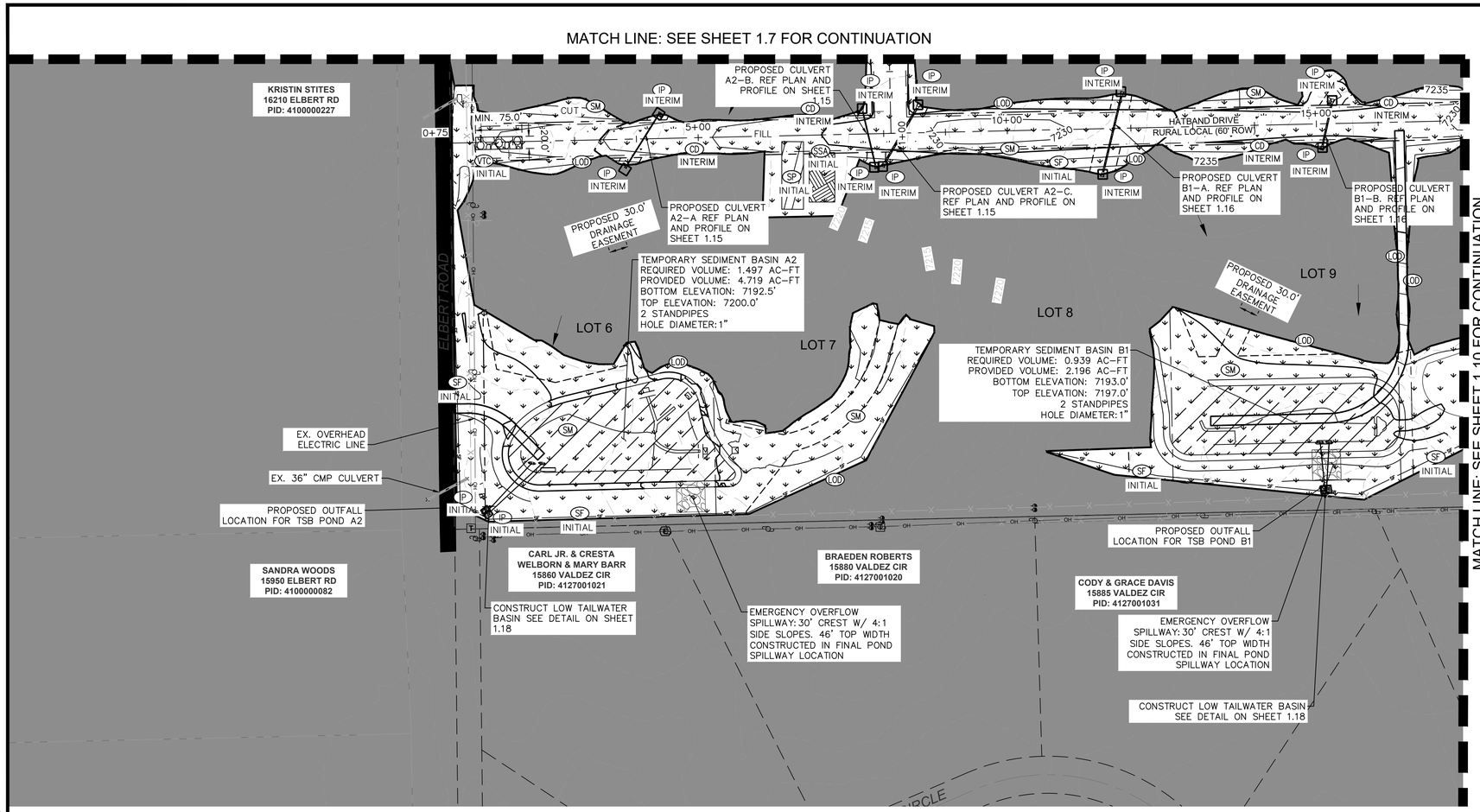


## LEGEND

- LOT BOUNDARY LINE
- LOT BOUNDARY LINE
- EXISTING MAJOR CONTOUR
- EXISTING MINOR CONTOUR
- PROPOSED MAJOR CONTOUR
- PROPOSED MINOR CONTOUR
- (LOD) LIMITS OF CONSTRUCTION/DISTURBANCE
- (SF) SILT FENCE
- CUT/FILL DEMARCATION
- (SP) SOIL STOCKPILE
- (SSA) STABILIZED STAGING AREA
- (VTC) VEHICLE TRACKING CONTROL
- (SM) SEEDING AND MULCHING (SEE NOTE 2 & 3)
- TEMPORARY SEDIMENT BASIN
- FILING NO. 2 (NOT A PART OF THIS PLAN)
- (ECB) EROSION CONTROL BLANKET (SEE NOTE 4)
- (SM) SEEDING AND MULCHING
- EXISTING FLOW DIRECTION ARROW
- (IP) INLET PROTECTION
- (CD) CHECK DAM (SEE NOTE 8)
- (CWA) CONCRETE WASHOUT

## NOTES

1. THE INTENT OF THIS PLAN IS TO IDENTIFY THE EROSION CONTROL PRACTICES RECOMMENDED. THE CONTRACTOR SHALL REFERENCE ADDITIONAL CONSTRUCTION PLANS FOR DEMOLITION OF EXISTING AND CONSTRUCTION OF PROPOSED IMPROVEMENTS.
2. TEMPORARY STABILIZATION (TS) SHALL BE IMPLEMENTED WITHIN THE DISTURBED PORTIONS OF THE PROJECT SITE NO LATER THAN 14 DAYS FOLLOWING THE CEASE OF CONSTRUCTION ACTIVITIES WITHIN THE DISTURBED AREAS.
3. PERMANENT STABILIZATION (PS) MAY BE USED WITHIN AREAS OF TEMPORARY STABILIZATION (TS) AT THE CONTRACTOR'S DISCRETION. STABILIZATION SHALL BE APPLIED IN ACCORDANCE WITH APPLICABLE TEMPORARY STABILIZATION SEQUENCING REQUIREMENTS.
4. CONTRACTOR SHALL UTILIZE ROLLED EROSION CONTROL PRODUCTS (STRAW-SINGLE NET EROSION CONTROL BLANKETS AND OPEN WEAVE TEXTILES) ON ALL SLOPES 3H:1V OR GREATER TO ACHIEVE REQUIRED STABILIZATION.
5. SILT FENCE TO BE INSTALLED PRIOR TO COMMENCEMENT OF ONSITE GRADING AND CONSTRUCTION ACTIVITIES.
6. DEMOLITION, REMOVAL, OVEREXCAVATION AND SOIL TREATMENT SHALL BE IN ACCORDANCE WITH THE GEOTECHNICAL ENGINEER RECOMMENDATIONS AS NOTED IN THE APPROVED PROJECT GEOTECHNICAL REPORT.
7. VEGETATION COVER IS ABOUT 90% CONSISTING OF NATIVE GRASSES, TREES AND SHRUBS, BASED ON VISUAL INSPECTION
8. ROCK CHECK DAMS (CD) MAY BE SUBSTITUTED FOR SEDIMENT CONTROL LOGS (SCL) OR STRAW WADDLES. CONTRACTOR TO DETERMINE LOCATION OF CD WITHIN THE ROADSIDE DITCH (SEE TABLE FOR MIN. SPACING REQUIREMENTS) IN COORDINATION WITH COUNTY INSPECTORS.
10. NO ASPHALT OR CONCRETE BATCH PLANTS SHALL BE USED FOR THIS PROJECT.

| SIZE OF SCL (STRAW WADDLE) | SPACING (PER VERTICAL FEET OF FALL) |
|---|---|
| 9 INCH | 1.5 FEET |
| 12 INCH | 2 FEET |
| 16 INCH | 2.67 FEET |

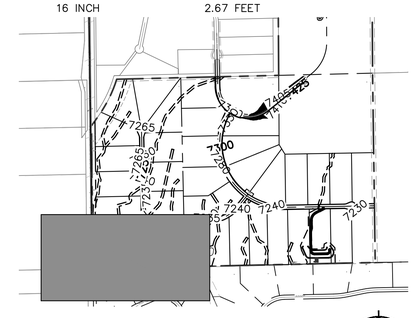


KEY MAP
SCALE: 1" = 1000'

NORTH

| NO. | REVISION | BY | DATE | APPR. |
|---|---|---|---|---|

Kimley»Horn
2024 KIMLEY-HORN AND ASSOCIATES, INC.
2 North Nevada Avenue Suite 900
Colorado Springs, Colorado 80903 (719) 453-0180

DESIGNED BY: KRK
DRAWN BY: AJL
CHECKED BY: KRK
DATE: 08/01/2024

OVERLOOK AT HOMESTEAD FILING NO. 1
EL PASO COUNTY, COLORADO
PRE DEVELOPMENT GESC PLAN
# GEC FINAL PLAN

COLORADO LICENSED
KEVIN REX KOFFORD
57234
9/9/2024
PROFESSIONAL ENGINEER

PROJECT NO.
196239003

SHEET
1.12

k:\cos_civil\196239003_overlook\CADD\PlanSheets\EG\EG_GEC_Final.dwg Kofford, Kevin 9/9/2024 1:10 PM

EPC 9/17/2024

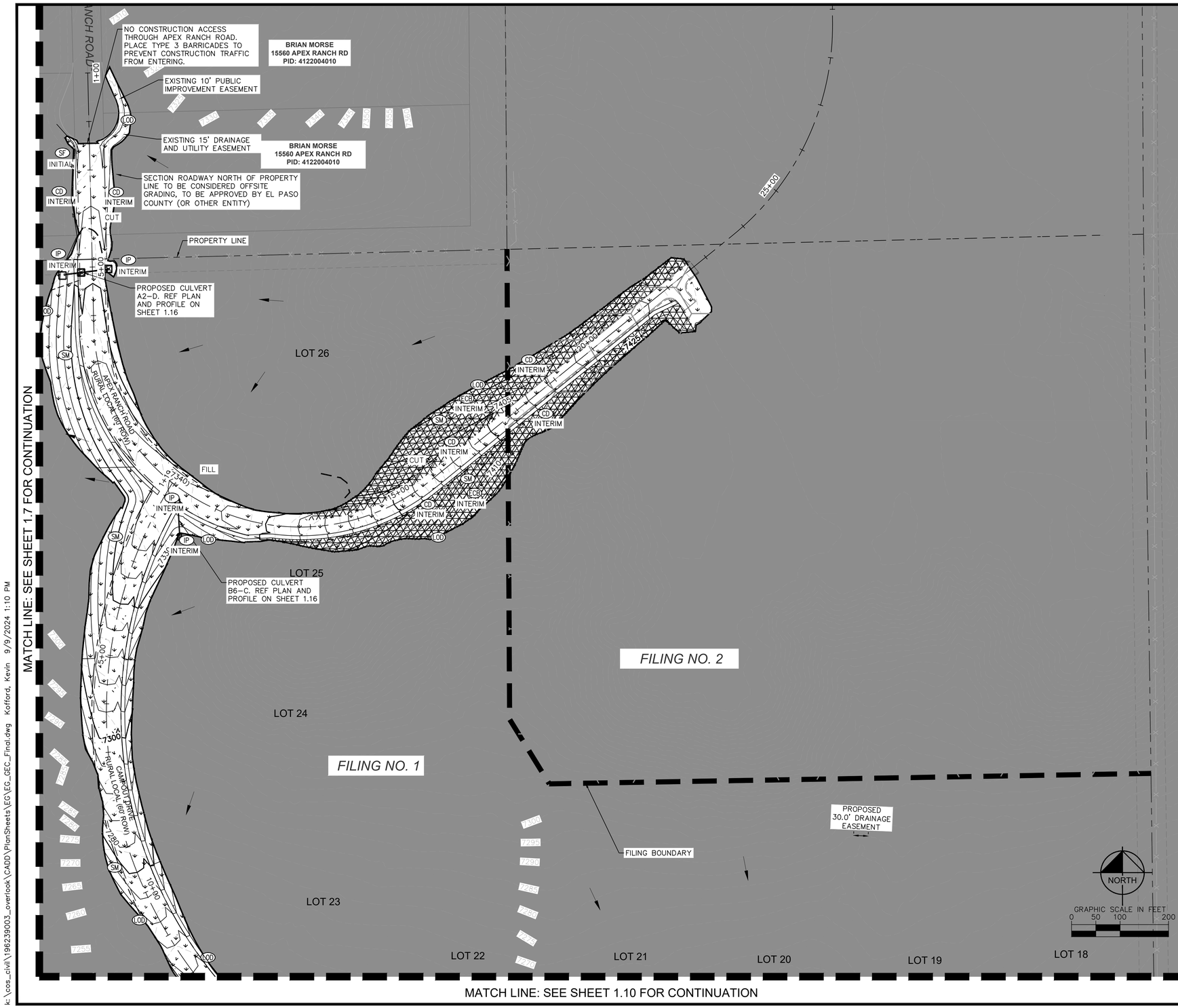


## LEGEND

- LOT BOUNDARY LINE
- LOT BOUNDARY LINE
- XXXX EXISTING MAJOR CONTOUR
- XXXX EXISTING MINOR CONTOUR
- XXXX PROPOSED MAJOR CONTOUR
- XXXX PROPOSED MINOR CONTOUR
- (LOD) LIMITS OF CONSTRUCTION/DISTURBANCE
- SF (SF) SILT FENCE
- CUT/FILL DEMARCATION
- (SP) SOIL STOCKPILE
- (SSA) STABILIZED STAGING AREA
- (VTC) VEHICLE TRACKING CONTROL
- (SM) SEEDING AND MULCHING (SEE NOTE 2 & 3)
- TEMPORARY SEDIMENT BASIN
- FILING NO. 2 (NOT A PART OF THIS PLAN)
- (ECB) EROSION CONTROL BLANKET (SEE NOTE 4)
- (SM) SEEDING AND MULCHING
- EXISTING FLOW DIRECTION ARROW
- (IP) INLET PROTECTION
- (CD) CHECK DAM (SEE NOTE 8)
- (CWA) CONCRETE WASHOUT

## NOTES

1. THE INTENT OF THIS PLAN IS TO IDENTIFY THE EROSION CONTROL PRACTICES RECOMMENDED. THE CONTRACTOR SHALL REFERENCE ADDITIONAL CONSTRUCTION PLANS FOR DEMOLITION OF EXISTING AND CONSTRUCTION OF PROPOSED IMPROVEMENTS.
2. TEMPORARY STABILIZATION (TS) SHALL BE IMPLEMENTED WITHIN THE DISTURBED PORTIONS OF THE PROJECT SITE NO LATER THAN 14 DAYS FOLLOWING THE CEASE OF CONSTRUCTION ACTIVITIES WITHIN THE DISTURBED AREAS.
3. PERMANENT STABILIZATION (PS) MAY BE USED WITHIN AREAS OF TEMPORARY STABILIZATION (TS) AT THE CONTRACTOR'S DISCRETION. STABILIZATION SHALL BE APPLIED IN ACCORDANCE WITH APPLICABLE TEMPORARY STABILIZATION SEQUENCING REQUIREMENTS.
4. CONTRACTOR SHALL UTILIZE ROLLED EROSION CONTROL PRODUCTS (STRAW-SINGLE NET EROSION CONTROL BLANKETS AND OPEN WEAVE TEXTILES) ON ALL SLOPES 3H:1V OR GREATER TO ACHIEVE REQUIRED STABILIZATION.
5. SILT FENCE TO BE INSTALLED PRIOR TO COMMENCEMENT OF ONSITE GRADING AND CONSTRUCTION ACTIVITIES.
6. DEMOLITION, REMOVAL, OVEREXCAVATION AND SOIL TREATMENT SHALL BE IN ACCORDANCE WITH THE GEOTECHNICAL ENGINEER RECOMMENDATIONS AS NOTED IN THE APPROVED PROJECT GEOTECHNICAL REPORT.
7. VEGETATION COVER IS ABOUT 90% CONSISTING OF NATIVE GRASSES, TREES AND SHRUBS, BASED ON VISUAL INSPECTION
8. ROCK CHECK DAMS (CD) MAY BE SUBSTITUTED FOR SEDIMENT CONTROL LOGS (SCL) OR STRAW WADDLES. CONTRACTOR TO DETERMINE LOCATION OF CD WITHIN THE ROADSIDE DITCH (SEE TABLE FOR MIN. SPACING REQUIREMENTS) IN COORDINATION WITH COUNTY INSPECTORS.
10. NO ASPHALT OR CONCRETE BATCH PLANTS SHALL BE USED FOR THIS PROJECT.

| SIZE OF SCL (STRAW WADDLE) | SPACING (PER VERTICAL FEET OF FALL) |
|---|---|
| 9 INCH | 1.5 FEET |
| 12 INCH | 2 FEET |
| 16 INCH | 2.67 FEET |

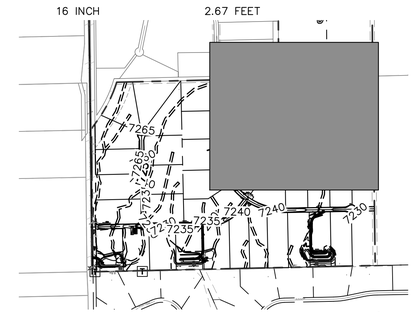


KEY MAP
SCALE: 1" = 1000'

NORTH

| NO. | REVISION | BY | DATE | APPR. |
|---|---|---|---|---|

Kimley»Horn
2024 KIMLEY-HORN AND ASSOCIATES, INC.
2 North Nevada Avenue Suite 900
Colorado Springs, Colorado 80903 (719) 453-0180

DESIGNED BY: KRK
DRAWN BY: AJL
CHECKED BY: KRK
DATE: 08/01/2024

# OVERLOOK AT HOMESTEAD FILING NO. 1
EL PASO COUNTY, COLORADO
PRE DEVELOPMENT GESC PLAN
# GEC FINAL PLAN

COLORADO LICENSED
KRISTIN REX KOFFORD
57234
9/16/24
PROFESSIONAL ENGINEER

PROJECT NO.
196239003

SHEET
1.13

k:\cos_civil\196239003_overlook\CADD\PlanSheets\EG\EG_GEC_Final.dwg Kofford, Kevin 9/9/2024 1:10 PM

EPC 9/17/2024

MATCH LINE: SEE SHEET 1.9 FOR CONTINUATION

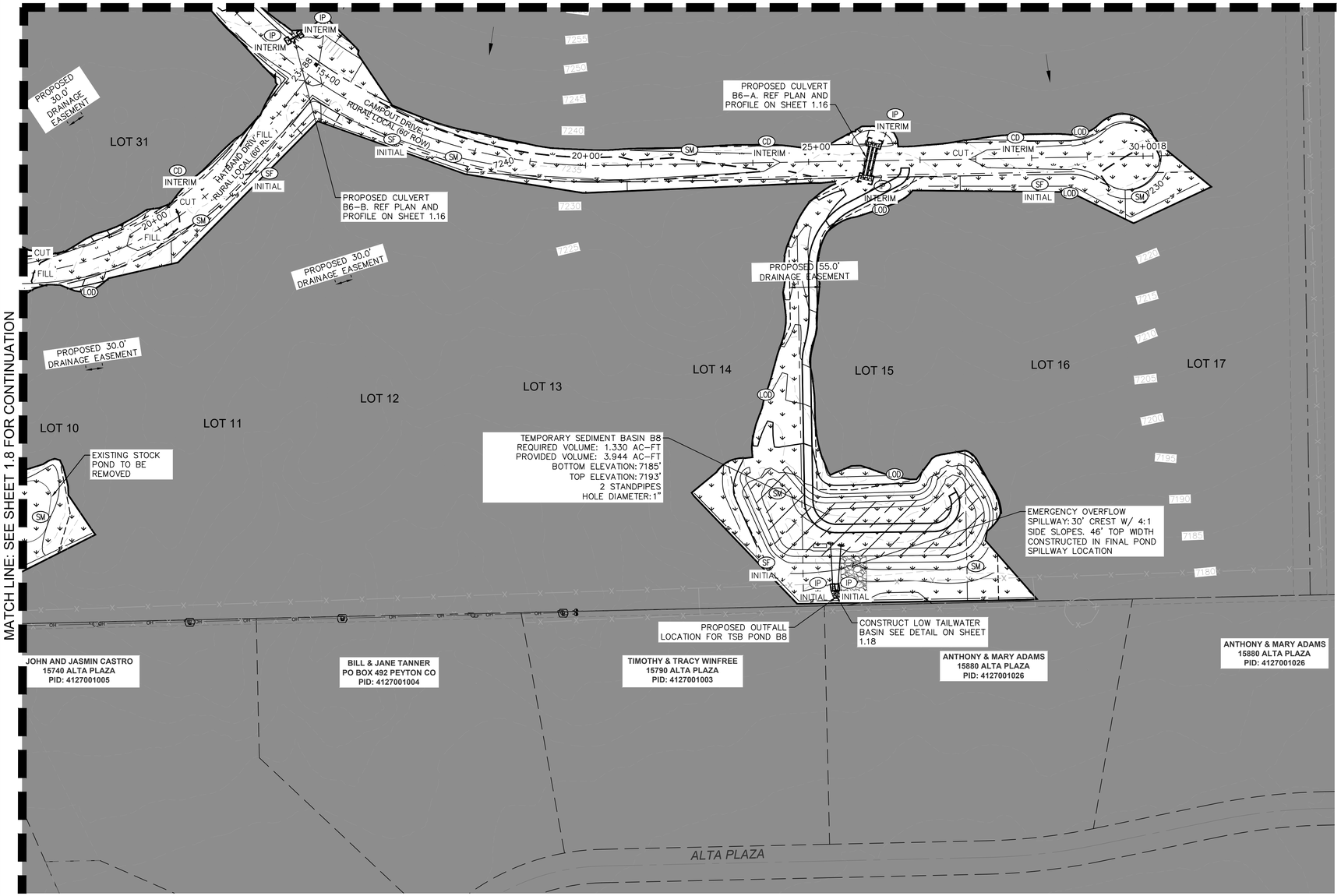


MATCH LINE: SEE SHEET 1.8 FOR CONTINUATION

NORTH

GRAPHIC SCALE IN FEET
0 50 100 200

## LEGEND

- LOT BOUNDARY LINE
- LOT BOUNDARY LINE
- EXISTING MAJOR CONTOUR
- EXISTING MINOR CONTOUR
- PROPOSED MAJOR CONTOUR
- PROPOSED MINOR CONTOUR
- LOD LIMITS OF CONSTRUCTION/DISTURBANCE
- SF SILT FENCE
- CUT/FILL DEMARCATION
- SP SOIL STOCKPILE
- SSA STABILIZED STAGING AREA
- VTC VEHICLE TRACKING CONTROL
- SM SEEDING AND MULCHING (SEE NOTE 2 & 3)
- TEMPORARY SEDIMENT BASIN
- FILING NO. 2 (NOT A PART OF THIS PLAN)
- ECB EROSION CONTROL BLANKET (SEE NOTE 4)
- SM SEEDING AND MULCHING
- EXISTING FLOW DIRECTION ARROW
- IP INLET PROTECTION
- CD CHECK DAM (SEE NOTE 8)
- CWA CONCRETE WASHOUT

## NOTES

1. THE INTENT OF THIS PLAN IS TO IDENTIFY THE EROSION CONTROL PRACTICES RECOMMENDED. THE CONTRACTOR SHALL REFERENCE ADDITIONAL CONSTRUCTION PLANS FOR DEMOLITION OF EXISTING AND CONSTRUCTION OF PROPOSED IMPROVEMENTS.
2. TEMPORARY STABILIZATION (TS) SHALL BE IMPLEMENTED WITHIN THE DISTURBED PORTIONS OF THE PROJECT SITE NO LATER THAN 14 DAYS FOLLOWING THE CEASE OF CONSTRUCTION ACTIVITIES WITHIN THE DISTURBED AREAS.
3. PERMANENT STABILIZATION (PS) MAY BE USED WITHIN AREAS OF TEMPORARY STABILIZATION (TS) AT THE CONTRACTOR'S DISCRETION. STABILIZATION SHALL BE APPLIED IN ACCORDANCE WITH APPLICABLE TEMPORARY STABILIZATION SEQUENCING REQUIREMENTS.
4. CONTRACTOR SHALL UTILIZE ROLLED EROSION CONTROL PRODUCTS (STRAW-SINGLE NET EROSION CONTROL BLANKETS AND OPEN WEAVE TEXTILES) ON ALL SLOPES 3H:1V OR GREATER TO ACHIEVE REQUIRED STABILIZATION.
5. SILT FENCE TO BE INSTALLED PRIOR TO COMMENCEMENT OF ONSITE GRADING AND CONSTRUCTION ACTIVITIES.
6. DEMOLITION, REMOVAL, OVEREXCAVATION AND SOIL TREATMENT SHALL BE IN ACCORDANCE WITH THE GEOTECHNICAL ENGINEER RECOMMENDATIONS AS NOTED IN THE APPROVED PROJECT GEOTECHNICAL REPORT.
7. VEGETATION COVER IS ABOUT 90% CONSISTING OF NATIVE GRASSES, TREES AND SHRUBS, BASED ON VISUAL INSPECTION
8. ROCK CHECK DAMS (CD) MAY BE SUBSTITUTED FOR SEDIMENT CONTROL LOGS (SCL) OR STRAW WADDLES. CONTRACTOR TO DETERMINE LOCATION OF CD WITHIN THE ROADSIDE DITCH (SEE TABLE FOR MIN. SPACING REQUIREMENTS) IN COORDINATION WITH COUNTY INSPECTORS.
10. NO ASPHALT OR CONCRETE BATCH PLANTS SHALL BE USED FOR THIS PROJECT.

| SIZE OF SCL (STRAW WADDLE) | SPACING (PER VERTICAL FEET OF FALL) |
|---|---|
| 9 INCH | 1.5 FEET |
| 12 INCH | 2 FEET |
| 16 INCH | 2.67 FEET |

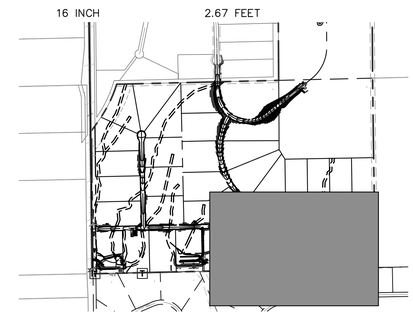

KEY MAP
SCALE: 1" = 1000'

NORTH

| NO. | REVISION | BY | DATE | APPR. |
|---|---|---|---|---|

Kimley»Horn
2024 KIMLEY-HORN AND ASSOCIATES, INC.
2 North Nevada Avenue Suite 900
Colorado Springs, Colorado 80903 (719) 453-0180

DESIGNED BY: KRK
DRAWN BY: AJL
CHECKED BY: KRK
DATE: 08/01/2024

OVERLOOK AT HOMESTEAD FILING NO. 1
EL PASO COUNTY, COLORADO
PRE DEVELOPMENT GESC PLAN
# GEC FINAL PLAN

COLORADO LICENSED
KEVIN REX KOFFORD
57234
8/5/2024
PROFESSIONAL ENGINEER

PROJECT NO.
196239003

SHEET
1.14

k:\cos_civil\196239003_overlook\CADD\PlanSheets\EG\EG_GEC_Final.dwg Kofford, Kevin 9/9/2024 1:10 PM

EPC 9/17/2024

## NOTES

1. PIPE LENGTH SHOWN IS 2D PIPE LENGTH. CONTRACTOR TO VERIFY QUANTITIES FOR ACTUAL LENGTH.
2. ASSUMED FLARED END SECTIONS (FES) LENGTHS ARE THE FOLLOWING:
   6'–1": 18"–30" FES
   8'–1": 30" FES
   8'–2": 42"–48" FES

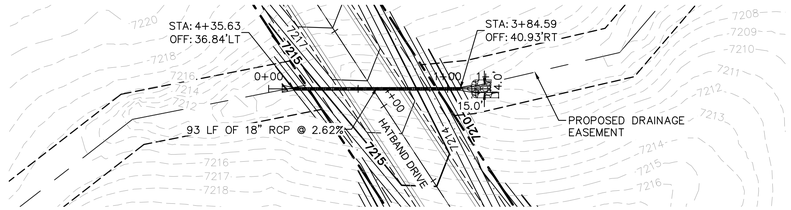


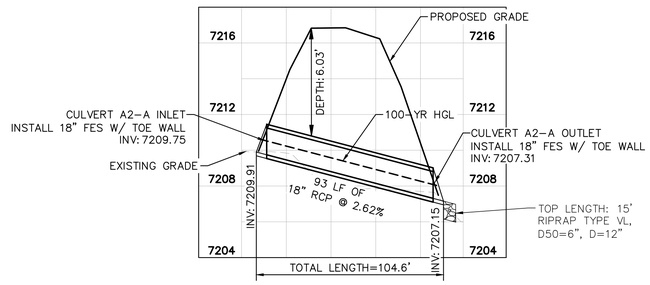


GRAPHIC SCALE IN FEET
0 20 40 80
HORIZONTAL

0 2 4 8
VERTICAL

CULVERT A2-A PLAN AND PROFILE

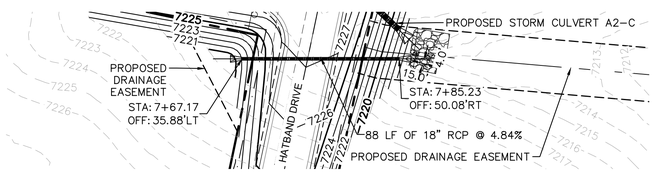


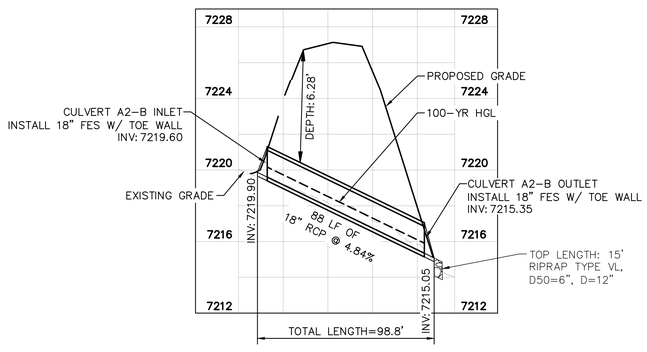


GRAPHIC SCALE IN FEET
0 20 40 80
HORIZONTAL

0 2 4 8
VERTICAL

CULVERT A2-B PLAN AND PROFILE

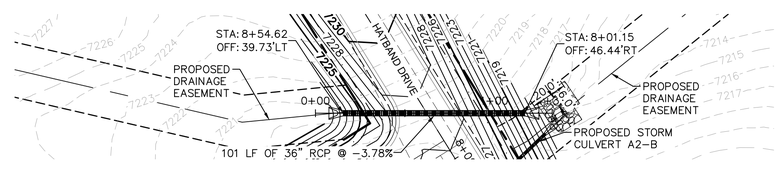


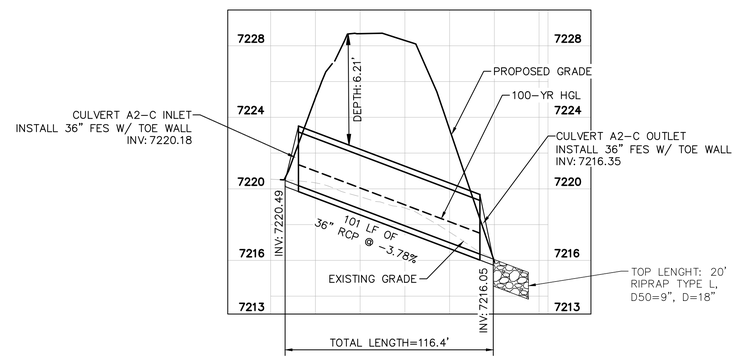


GRAPHIC SCALE IN FEET
0 20 40 80
HORIZONTAL

0 2 4 8
VERTICAL

CULVERT A2-C PLAN AND PROFILE

| NO. | REVISION | BY | DATE | APPR. |
|---|---|---|---|---|


Kimley»Horn
2024 KIMLEY-HORN AND ASSOCIATES, INC.
2 North Nevada Avenue Suite 900
Colorado Springs, Colorado 80903 (719) 453-0180


DESIGNED BY: KRK
DRAWN BY: AJL
CHECKED BY: KRK
DATE: 08/01/2024

OVERLOOK AT HOMESTEAD FILING NO. 1
EL PASO COUNTY, COLORADO
PRE DEVELOPMENT GESC PLAN
# CULVERT PLAN

COLORADO LICENSED
KEVIN REX KRYSTEK
57234
9/9/2024
PROFESSIONAL ENGINEER

PROJECT NO.
196239003

SHEET
1.15

k:\cos_civil\196239003_overlook\CADD\PlanSheets\EG\EG_GEC_CULVERT.dwg Kofford, Kevin 9/9/2024 1:11 PM

EPC 9/17/2024

## NOTES

1. PIPE LENGTH SHOWN IS 2D PIPE LENGTH. CONTRACTOR TO VERIFY QUANTITIES FOR ACTUAL LENGTH.
2. ASSUMED FLARED END SECTIONS (FES) LENGTHS ARE THE FOLLOWING:
   6'–1": 18"–30" FES
   8'–1": 30" FES
   8'–2": 42"–48" FES

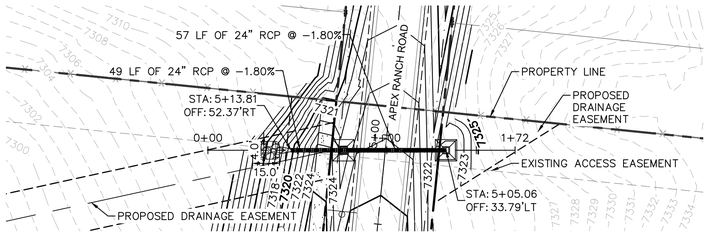


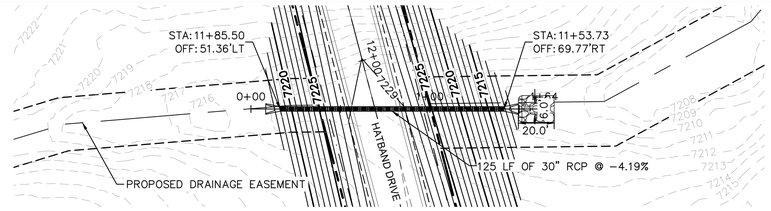


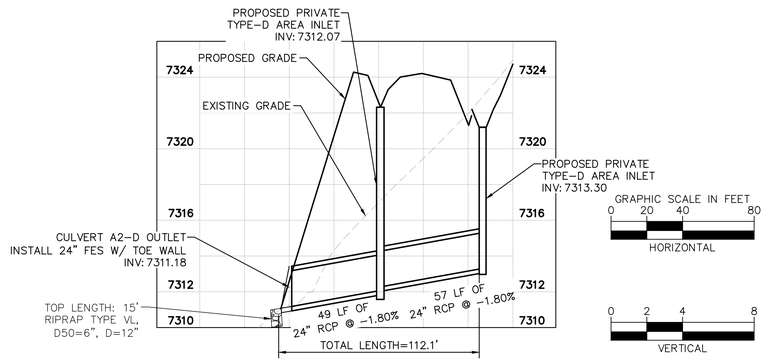


CULVERT A2-D PLAN AND PROFILE

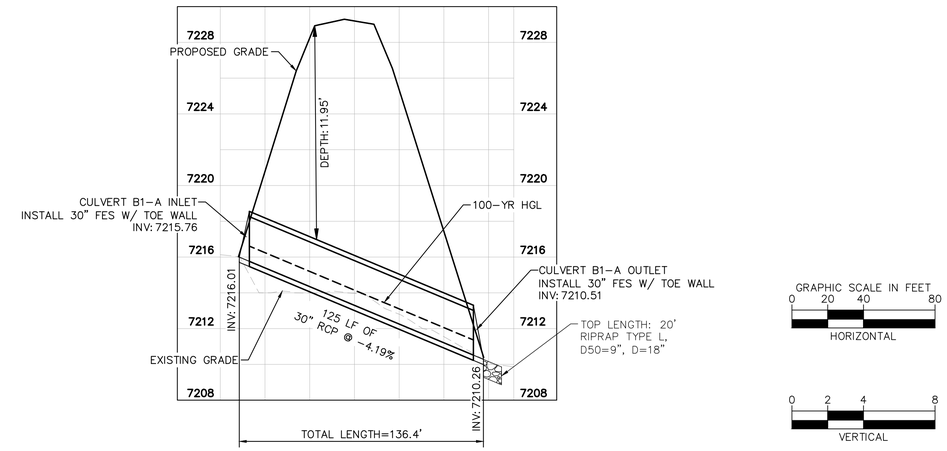


CULVERT B1-A PLAN AND PROFILE

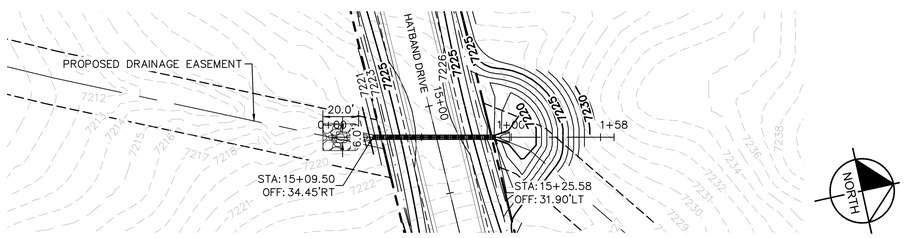


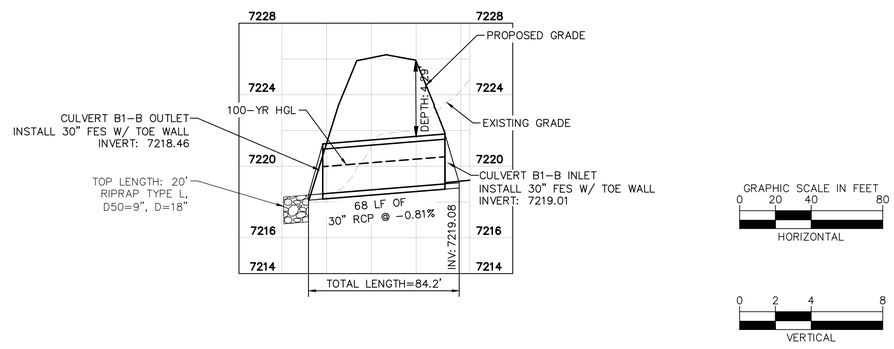


CULVERT B1-B PLAN AND PROFILE

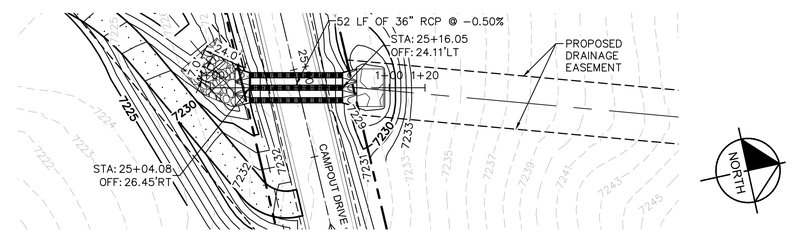


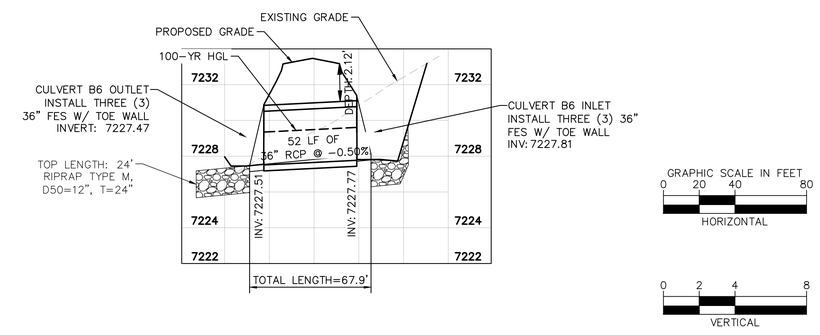


CULVERT B6-A PLAN AND PROFILE

| NO. | REVISION | BY | DATE | APPR. |
|---|---|---|---|---|


Kimley»Horn
2024 KIMLEY–HORN AND ASSOCIATES, INC.
2 North Nevada Avenue Suite 900
Colorado Springs, Colorado 80903 (719) 453–0180


DESIGNED BY: KRK
DRAWN BY: AJL
CHECKED BY: KRK
DATE: 08/01/2024

OVERLOOK AT HOMESTEAD FILING NO. 1
EL PASO COUNTY, COLORADO
PRE DEVELOPMENT GESC PLAN
# CULVERT PLAN

COLORADO LICENSED PROFESSIONAL ENGINEER KEVIN REX KOFFORD 57234 9/9/2024

PROJECT NO. 196239003

SHEET 1.16

k:\cos_civil\196239003_overlook\CADD\PlanSheets\EG\EG_GEC_CULVERT.dwg Kofford, Kevin 9/9/2024 1:11 PM

EPC 9/17/2024

## NOTES

1. PIPE LENGTH SHOWN IS 2D PIPE LENGTH. CONTRACTOR TO VERIFY QUANTITIES FOR ACTUAL LENGTH.
2. ASSUMED FLARED END SECTIONS (FES) LENGTHS ARE THE FOLLOWING:
   6'–1": 18"–30" FES
   8'–1": 30" FES
   8'–2": 42"–48" FES

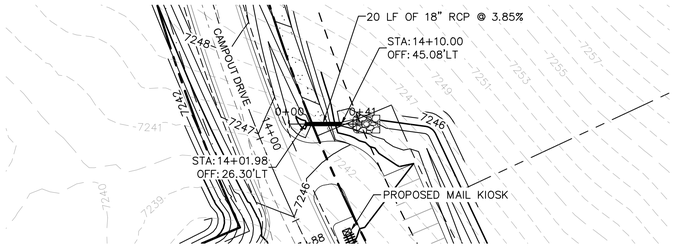


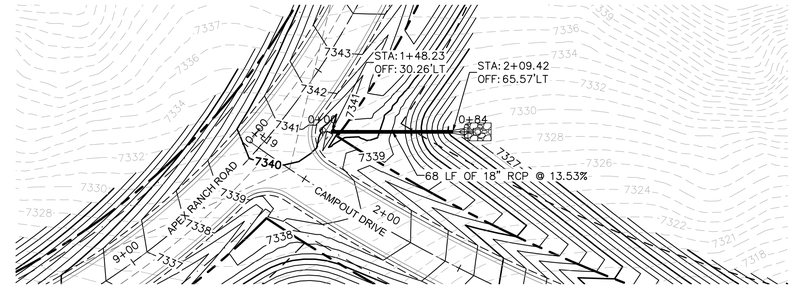


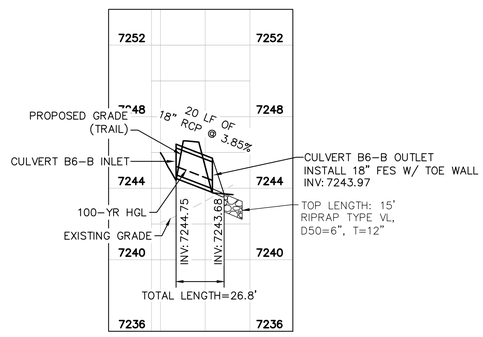


CULVERT B6-B PLAN AND PROFILE

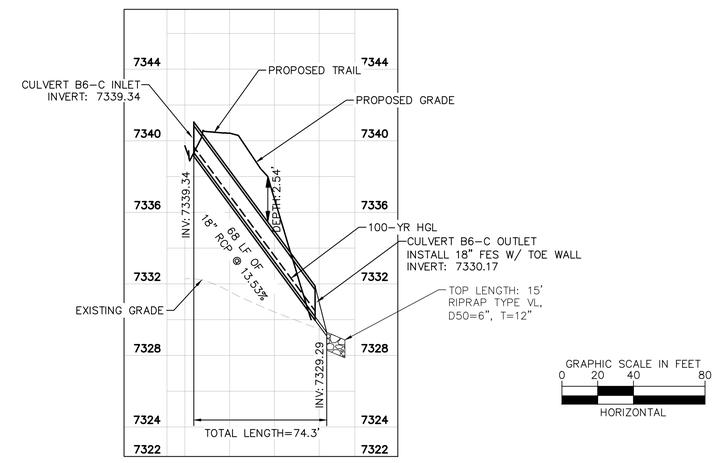


CULVERT B6-C PLAN AND PROFILE

GRAPHIC SCALE IN FEET
0 20 40 80
HORIZONTAL

0 2 4 8
VERTICAL

| NO. | REVISION | BY | DATE | APPR. |
|---|---|---|---|---|

Kimley»Horn

2024 KIMLEY–HORN AND ASSOCIATES, INC.
2 North Nevada Avenue Suite 900
Colorado Springs, Colorado 80903 (719) 453–0180


DESIGNED BY: KRK
DRAWN BY: AJL
CHECKED BY: KRK
DATE: 08/01/2024

OVERLOOK AT HOMESTEAD FILING NO. 1
EL PASO COUNTY, COLORADO
PRE DEVELOPMENT GESC PLAN
# CULVERT PLAN

COLORADO LICENSED
KEVIN REX KOFFORD
57234
PROFESSIONAL ENGINEER

PROJECT NO.
196239003

SHEET
1.17

k:\cos_civil\196239003_overlook\CADD\PlanSheets\EG\EG_GEC_CULVERT.dwg Kofford, Kevin 9/9/2024 1:11 PM

EPC 9/17/2024

## CULVERT END TREATMENT DETAIL
## PLAN VIEW
1" = 1'

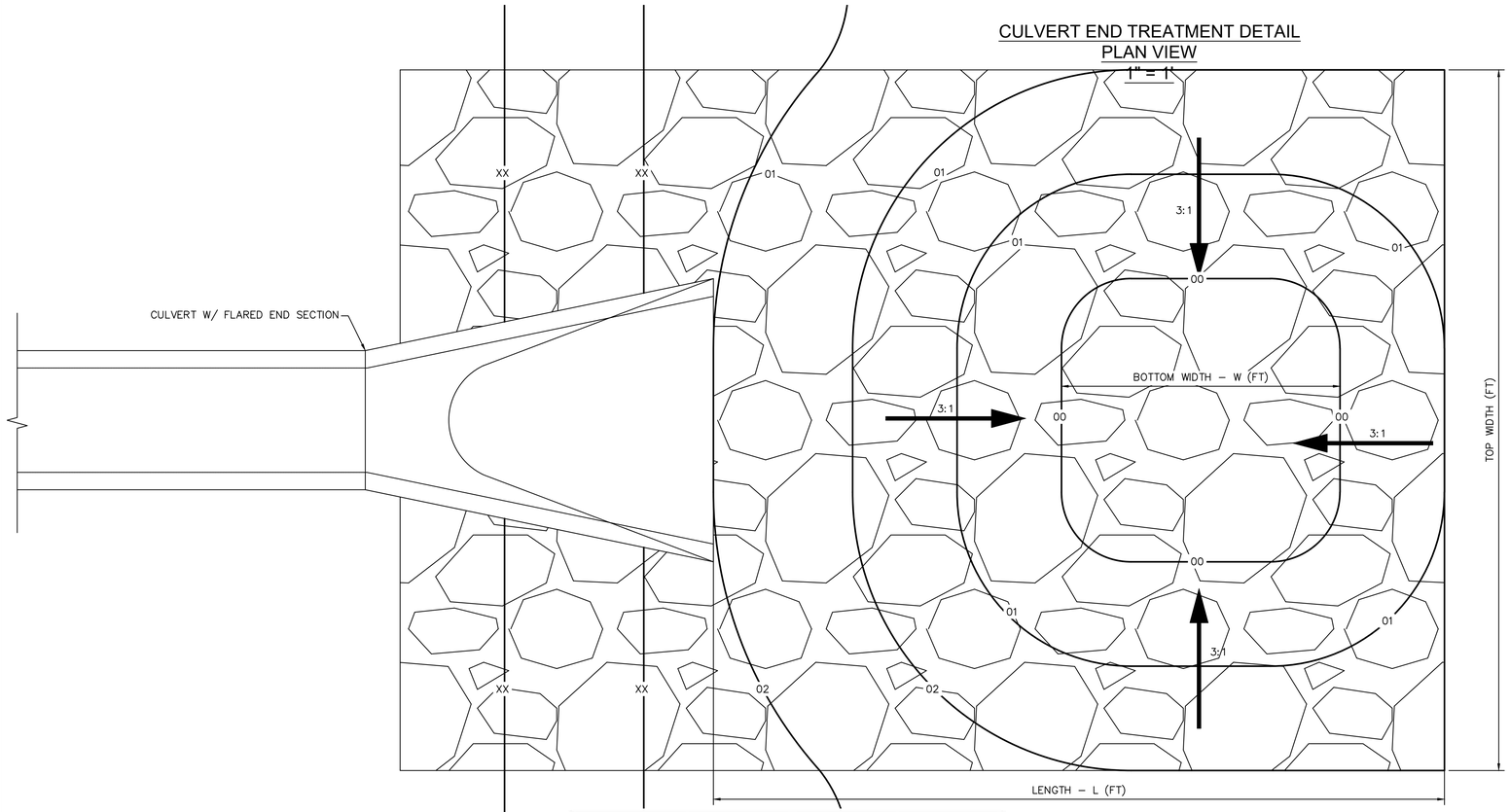


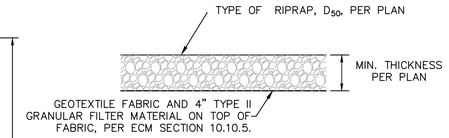


1. D50 = MEAN PARTICLE SIZE (INTERMEDIATE DIMENSION) BY WEIGHT.
2. RIP RAP SHALL BE PER PLAN AND SHALL BE MIXED WITH 30% SOIL TO 70% RIP RAP.
3. RIP RAP SECTION THICKNESS SHALL BE 2.0 TIMES THE SPECIFIED MEAN PARTICLE SIZE (I.E. D50 X 2.0 MINIMUM) PER ECM SECTION 10.10.3.
4. ALL RIP RAP SHALL BE UNDERLAIN WITH GEOTEXTILE FILTER FABRIC FOR STABILIZATION.
5. RIP RAP SHALL WRAP AROUND AND EXTEND 2' MIN. BEHIND FLUME AND FLARED END SECTIONS.

## TYPICAL RIPRAP SECTION DETAIL

**Table 506-2**

| Pay Item | Stone Size d50[1] (Inches) | Percent of Material Smaller Than Typical Stone[2] | Typical Stone Dimensions[3] (Inches) | Typical Stone Weight[4] (Pounds) |
|---|---|---|---|---|
| Riprap | 6 | 70-100<br>50-70<br>35-50<br>2-10 | 12<br>9<br>6<br>2 | 85<br>35<br>10<br>0.4 |
| Riprap | 9 | 70-100<br>50-70<br>35-50<br>2-10 | 15<br>12<br>9<br>3 | 160<br>85<br>35<br>1.3 |
| Riprap | 12 | 70-100<br>50-70<br>35-50<br>2-10 | 21<br>18<br>12<br>4 | 440<br>275<br>85<br>3 |
| Riprap | 18 | 100<br>50-70<br>35-50<br>2-10 | 30<br>24<br>18<br>6 | 1280<br>650<br>275<br>10 |
| Riprap | 24 | 100<br>50-70<br>35-50<br>2-10 | 42<br>33<br>24<br>9 | 3500<br>1700<br>650<br>35 |

[1]d50 = nominal stone size
[2]based on typical rock mass
[3]equivalent spherical diameter
[4]based on a specific gravity = 2.5

| PIPE SIZE OR BOX HEIGHT | D | W* | L |
|---|---|---|---|
| 18" – 24" | 1'–0" | 4' | 15' |
| 30" – 36" | 1'–6" | 6' | 20' |
| 42" – 48" | 2'–0" | 7' | 24' |
| 54" – 60" | 2'–6" | 8' | 28' |
| 66" – 72" | 3'–0" | 9' | 32' |

* IF OUTLET PIPE IS A BOX CULVERT WITH A WIDTH GREATER THAN W, THEN W = CULVERT WIDTH

N = NUMBER OF BARRELS
BOTTOM WIDTH FOR SINGLE BARREL CULVERTS = W
BOTTOM WIDTH FOR NUMEROUS BARREL CULVERTS = W(N) + 4(N–1)

**Culvert & Riprap Summary**

| Culvert Details | | | | | | | Riprap Details (Low Tailwater Basin Design) | | | | | | | |
|---|---|---|---|---|---|---|---|---|---|---|---|---|---|---|
| Culvert ID | Basin | Q100 flow (cfs) | Flow % of Basin | Flows (cfs) | HW/D Ratio | Diameter (in) | Top Length (ft) | Bottom Width (ft) | Top Width (ft) | D50 Type | D50 Size (in) | D50 Thickness (D) (in) | Normal Depth in Pipe (ft) | Upstream Headwater Elevation (ft) |
| A2-A | A2 | 93.46 | 10.00% | 9.35 | 1.39 | 18 | 15 | 4 | 10 | VL | 6 | 12 | 0.75 | 7211.99 |
| A2-B | A2 | 93.46 | 8.00% | 7.48 | 1.12 | 18 | 15 | 4 | 10 | VL | 6 | 12 | 0.56 | 7221.58 |
| A2-C | A2 | 93.46 | 49.00% | 45.80 | 1.21 | 36 | 20 | 6 | 15 | L | 9 | 18 | 1.17 | 7224.11 |
| A2-D | A2 | 93.46 | 11.00% | 10.28 | 1.52 | 18 | 15 | 4 | 10 | VL | 6 | 12 | 0.60 | 7320.27 |
| B1-A | B1 | 80.40 | 28.00% | 22.51 | 0.99 | 30 | 20 | 6 | 15 | L | 9 | 18 | 0.85 | 7218.48 |
| B1-B | B1 | 80.40 | 34.00% | 27.34 | 1.14 | 30 | 20 | 6 | 15 | L | 9 | 18 | 0.90 | 7224.85 |
| B6-A | B6 | 104.60 | 100.00% | 104.60 | 1.39 | 36 (3 Barrels) | 24 | 7 | 27 | M | 12 | 24 | 1.91 | 7233.42 |
| B6-B | B6 | 104.60 | 2.00% | 5.63 | 0.91 | 18 | 15 | 4 | 10 | VL | 6 | 12 | 0.47 | 7246.36 |
| B6-C | B6 | 104.60 | 1.00% | 3.26 | 1.28 | 12 | 15 | 4 | 10 | VL | 6 | 12 | 0.32 | 7340.58 |
| TSB A2 OUTFALL | (Used permanent pond outfall diameter sizing for final pond installation) | | | | | 42 | 24 | 7 | 19 | L | 9 | 18 | | |
| TSB B1 OUTFALL | (Used permanent pond outfall diameter sizing for final pond installation) | | | | | 36 | 20 | 6 | 15 | L | 9 | 18 | | |
| TSB B6 OUTFALL | (Used permanent pond outfall diameter sizing for final pond installation) | | | | | 42 | 24 | 7 | 19 | L | 9 | 18 | | |

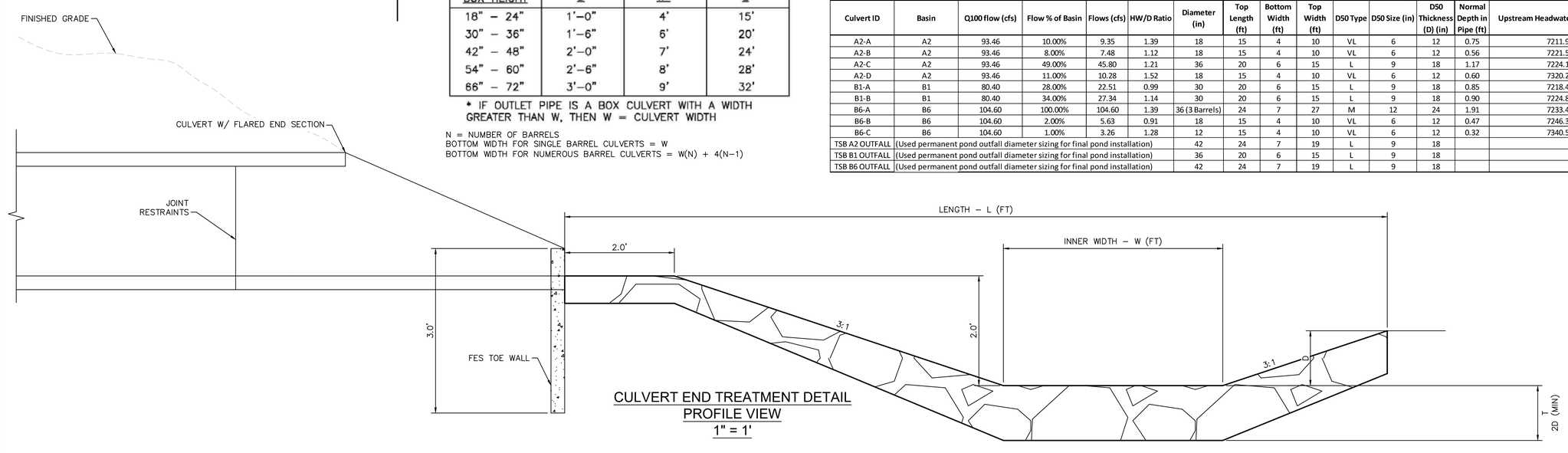


## CULVERT END TREATMENT DETAIL
## PROFILE VIEW
1" = 1'

| NO. | REVISION | BY | DATE | APPR. |
|---|---|---|---|---|


Kimley»Horn
2024 KIMLEY-HORN AND ASSOCIATES, INC.
2 North Nevada Avenue Suite 900
Colorado Springs, Colorado 80903 (719) 453-0180


DESIGNED BY: KRK
DRAWN BY: AJL
CHECKED BY: KRK
DATE: 08/01/2024

OVERLOOK AT HOMESTEAD FILING NO. 1
EL PASO COUNTY, COLORADO
PRE DEVELOPMENT GESC PLAN
# CULVERT END TREATMENT

COLORADO LICENSED PROFESSIONAL ENGINEER KEVIN REX KOFFORD 57234 9/5/2024

PROJECT NO. 196239003

SHEET 1.18

k:\cos_civil\196239003_overlook\CADD\PlanSheets\EG\EG_GEC_CULVERT.dwg Kofford, Kevin 9/9/2024 1:11 PM

EPC 9/17/2024

## Construction Fence (CF) SM-3

### Description

**Photograph CF-1.** A construction fence helps delineate areas where existing vegetation is being protected. Photo courtesy of Douglas County.

A construction fence restricts site access to designated entrances and exits, delineates construction site boundaries, and keeps construction out of sensitive areas such as natural areas to be preserved as open space, wetlands and riparian areas.

### Appropriate Uses

A construction fence can be used to delineate the site perimeter and locations within the site where access is restricted to protect natural resources such as wetlands, waterbodies, trees, and other natural areas of the site that should not be disturbed.

If natural resource protection is an objective, then the construction fencing should be used in combination with other perimeter control BMPs such as silt fence, sediment control logs or similar measures.

### Design and Installation

Construction fencing may be chain link or plastic mesh and should be installed following manufacturer's recommendations. See Detail CF-1 for typical installations.

Do not place construction fencing in areas within work limits of machinery.

### Maintenance and Removal

- Inspect fences for damage; repair or replace as necessary.
- Fencing should be tight and any areas with slumping or fallen posts should be reinstalled.
- Fencing should be removed once construction is complete.

| Construction Fence | |
|---|---|
| **Functions** | |
| Erosion Control | No |
| Sediment Control | No |
| Site/Material Management | Yes |



## SM-3 Construction Fence (CF)

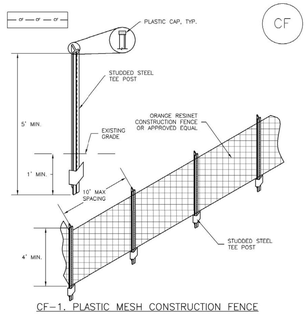


CF-1. PLASTIC MESH CONSTRUCTION FENCE

CONSTRUCTION FENCE INSTALLATION NOTES

1. SEE PLAN VIEW FOR:
   -LOCATION OF CONSTRUCTION FENCE.

2. CONSTRUCTION FENCE SHOWN SHALL BE INSTALLED PRIOR TO ANY LAND DISTURBING ACTIVITIES.

3. CONSTRUCTION FENCE SHALL BE COMPOSED OF ORANGE, CONTRACTOR-GRADE MATERIAL THAT IS AT LEAST 4' HIGH. METAL POSTS SHOULD HAVE A PLASTIC CAP FOR SAFETY.

4. STUDDED STEEL TEE POSTS SHALL BE UTILIZED TO SUPPORT THE CONSTRUCTION FENCE. MAXIMUM SPACING FOR STEEL TEE POSTS SHALL BE 10'.

5. CONSTRUCTION FENCE SHALL BE SECURELY FASTENED TO THE TOP, MIDDLE, AND BOTTOM OF EACH POST.



## Construction Fence (CF) SM-3

CONSTRUCTION FENCE MAINTENANCE NOTES

1. INSPECT BMPs EACH WORKDAY, AND MAINTAIN THEM IN EFFECTIVE OPERATING CONDITION. MAINTENANCE OF BMPs SHOULD BE PROACTIVE, NOT REACTIVE. INSPECT BMPs AS SOON AS POSSIBLE (AND ALWAYS WITHIN 24 HOURS) FOLLOWING A STORM THAT CAUSES SURFACE EROSION, AND PERFORM NECESSARY MAINTENANCE.

2. FREQUENT OBSERVATIONS AND MAINTENANCE ARE NECESSARY TO MAINTAIN BMPs IN EFFECTIVE OPERATING CONDITION. INSPECTIONS AND CORRECTIVE MEASURES SHOULD BE DOCUMENTED THOROUGHLY.

3. WHERE BMPs HAVE FAILED, REPAIR OR REPLACEMENT SHOULD BE INITIATED UPON DISCOVERY OF THE FAILURE.

4. CONSTRUCTION FENCE SHALL BE REPAIRED OR REPLACED WHEN THERE ARE SIGNS OF DAMAGE SUCH AS RIPS OR SAGS. CONSTRUCTION FENCE IS TO REMAIN IN PLACE UNTIL THE UPSTREAM DISTURBED AREA IS STABILIZED AND APPROVED BY THE LOCAL JURISDICTION.

5. WHEN CONSTRUCTION FENCES ARE REMOVED, ALL DISTURBED AREAS ASSOCIATED WITH THE INSTALLATION, MAINTENANCE, AND/OR REMOVAL OF THE FENCE SHALL BE COVERED WITH TOPSOIL, SEEDED AND MULCHED, OR OTHERWISE STABILIZED AS APPROVED BY LOCAL JURISDICTION.

NOTE: MANY JURISDICTIONS HAVE BMP DETAILS THAT VARY FROM UDFCD STANDARD DETAILS. CONSULT WITH LOCAL JURISDICTIONS AS TO WHICH DETAIL SHOULD BE USED WHEN DIFFERENCES ARE NOTED.

(DETAIL ADAPTED FROM TOWN OF PARKER, COLORADO. NOT AVAILABLE IN AUTOCAD)



## Vehicle Tracking Control (VTC) SM-4

### Description

**Photograph VTC-1.** A vehicle tracking control pad constructed with properly sized rock reduces off-site sediment tracking.

Vehicle tracking controls provide stabilized construction site access where vehicles exit the site onto paved public roads. An effective vehicle tracking control helps remove sediment (mud or dirt) from vehicles, reducing tracking onto the paved surface.

### Appropriate Uses

Implement a stabilized construction entrance or vehicle tracking control where frequent heavy vehicle traffic exits the construction site onto a paved roadway. An effective vehicle tracking control is particularly important during the following conditions:

- Wet weather periods when mud is easily tracked off site.
- During dry weather periods where dust is a concern.
- When poorly drained, clayey soils are present on site.

Although wheel washes are not required in designs of vehicle tracking controls, they may be needed at particularly muddy sites.

### Design and Installation

Construct the vehicle tracking control on a level surface. Where feasible, grade the tracking control towards the construction site to reduce off-site runoff. Place signage, as needed, to direct construction vehicles to the designated exit through the vehicle tracking control. There are several different types of stabilized construction entrances including:

**VTC-1. Aggregate Vehicle Tracking Control**. This is a coarse-aggregate surfaced pad underlain by a geotextile. This is the most common vehicle tracking control, and when properly maintained can be effective at removing sediment from vehicle tires.

**VTC-2. Vehicle Tracking Control with Construction Mat or Turf Reinforcement Mat**. This type of control may be appropriate for site access at very small construction sites with low traffic volume over vegetated areas. Although this application does not typically remove sediment from vehicles, it helps protect existing vegetation and provides a stabilized entrance.

| Vehicle Tracking Control | |
|---|---|
| **Functions** | |
| Erosion Control | Moderate |
| Sediment Control | Yes |
| Site/Material Management | Yes |



## SM-4 Vehicle Tracking Control (VTC)

**VTC-3. Stabilized Construction Entrance/Exit with Wheel Wash**. This is an aggregate pad, similar to VTC-1, but includes equipment for tire washing. The wheel wash equipment may be as simple as hand-held power washing equipment to more advance proprietary systems. When a wheel wash is provided, it is important to direct wash water to a sediment trap prior to discharge from the site.

Vehicle tracking controls are sometimes installed in combination with a sediment trap to treat runoff.

### Maintenance and Removal

**Photograph VTC-2.** A vehicle tracking control pad with wheel wash facility. Photo courtesy of Tom Gore.

Inspect the area for degradation and replace aggregate or material used for a stabilized entrance/exit as needed. If the area becomes clogged and ponds water, remove and dispose of excess sediment or replace material with a fresh layer of aggregate as necessary.

With aggregate vehicle tracking controls, ensure rock and debris from this area do not enter the public right-of-way.

Remove sediment that is tracked onto the public right of way daily or more frequently as needed. Excess sediment in the roadway indicates that the stabilized construction entrance needs maintenance.

Ensure that drainage ditches at the entrance/exit area remain clear.

A stabilized entrance should be removed only when there is no longer the potential for vehicle tracking to occur. This is typically after the site has been stabilized.

When wheel wash equipment is used, be sure that the wash water is discharged to a sediment trap prior to discharge. Also inspect channels conveying the water from the wash area to the sediment trap and stabilize areas that may be eroding.

When a construction entrance/exit is removed, excess sediment from the aggregate should be removed and disposed of appropriately. The entrance should be promptly stabilized with a permanent surface following removal, typically by paving.



## Vehicle Tracking Control (VTC) SM-4

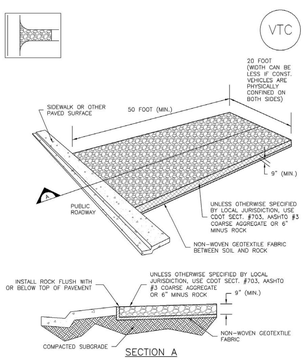


VTC-1. AGGREGATE VEHICLE TRACKING CONTROL



## SM-4 Vehicle Tracking Control (VTC)

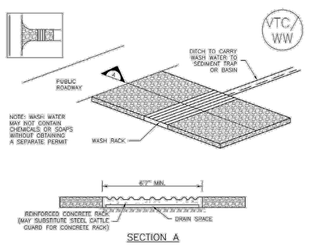


VTC-2. AGGREGATE VEHICLE TRACKING CONTROL WITH WASH RACK



## Vehicle Tracking Control (VTC) SM-4

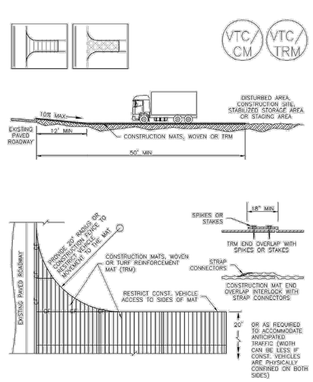


VTC-3. VEHICLE TRACKING CONTROL W/ CONSTRUCTION MAT OR TURF REINFORCEMENT MAT (TRM)



## SM-4 Vehicle Tracking Control (VTC)

STABILIZED CONSTRUCTION ENTRANCE/EXIT INSTALLATION NOTES

1. SEE PLAN VIEW FOR
   -LOCATION OF CONSTRUCTION ENTRANCE(S)/EXIT(S).
   -TYPE OF CONSTRUCTION ENTRANCE(S)/EXIT(S) (WITH/WITHOUT WHEEL WASH, CONSTRUCTION MAT OR TRM).

2. CONSTRUCTION MAT OR TRM STABILIZED CONSTRUCTION ENTRANCES ARE ONLY TO BE USED ON SHORT DURATION PROJECTS (TYPICALLY RANGING FROM A WEEK TO A MONTH) WHERE THERE WILL BE LIMITED VEHICULAR ACCESS.

3. A STABILIZED CONSTRUCTION ENTRANCE/EXIT SHALL BE LOCATED AT ALL ACCESS POINTS WHERE VEHICLES ACCESS THE CONSTRUCTION SITE FROM PAVED RIGHT-OF-WAYS.

4. STABILIZED CONSTRUCTION ENTRANCE/EXIT SHALL BE INSTALLED PRIOR TO ANY LAND DISTURBING ACTIVITIES.

5. A NON-WOVEN GEOTEXTILE FABRIC SHALL BE PLACED UNDER THE STABILIZED CONSTRUCTION ENTRANCE/EXIT PRIOR TO THE PLACEMENT OF ROCK.

6. UNLESS OTHERWISE SPECIFIED BY LOCAL JURISDICTION, ROCK SHALL CONSIST OF DOT SECT. #703, AASHTO #3 COARSE AGGREGATE OR 6" (MINUS) ROCK.

STABILIZED CONSTRUCTION ENTRANCE/EXIT MAINTENANCE NOTES

1. INSPECT BMPs EACH WORKDAY, AND MAINTAIN THEM IN EFFECTIVE OPERATING CONDITION. MAINTENANCE OF BMPs SHOULD BE PROACTIVE, NOT REACTIVE. INSPECT BMPs AS SOON AS POSSIBLE (AND ALWAYS WITHIN 24 HOURS) FOLLOWING A STORM THAT CAUSES SURFACE EROSION, AND PERFORM NECESSARY MAINTENANCE.

2. FREQUENT OBSERVATIONS AND MAINTENANCE ARE NECESSARY TO MAINTAIN BMPs IN EFFECTIVE OPERATING CONDITION. INSPECTIONS AND CORRECTIVE MEASURES SHOULD BE DOCUMENTED THOROUGHLY.

3. WHERE BMPs HAVE FAILED, REPAIR OR REPLACEMENT SHOULD BE INITIATED UPON DISCOVERY OF THE FAILURE.

4. ROCK SHALL BE REAPPLIED OR REGRADED AS NECESSARY TO THE STABILIZED ENTRANCE/EXIT TO MAINTAIN A CONSISTENT DEPTH.

5. SEDIMENT TRACKED ONTO PAVED ROADS IS TO BE REMOVED THROUGHOUT THE DAY AND AT THE END OF THE DAY BY SHOVELING OR SWEEPING. SEDIMENT MAY NOT BE WASHED DOWN STORM SEWER DRAINS.

NOTE: MANY JURISDICTIONS HAVE BMP DETAILS THAT VARY FROM UDFCD STANDARD DETAILS. CONSULT WITH LOCAL JURISDICTIONS AS TO WHICH DETAIL SHOULD BE USED WHEN DIFFERENCES ARE NOTED.

(DETAILS ADAPTED FROM CITY OF BROOMFIELD, COLORADO. NOT AVAILABLE IN AUTOCAD)



## Stabilized Staging Area (SSA) SM-6

### Description

**Photograph SSA-1.** Example of a staging area with a gravel surface to prevent mud tracking and reduce runoff. Photo courtesy of Douglas County.

A stabilized staging area is a clearly designated area where construction equipment and vehicles, stockpiles, waste bins, and other construction-related materials are stored. The contractor office trailer may also be located in this area. Depending on the size of the construction site, more than one staging area may be necessary.

### Appropriate Uses

Most construction sites will require a staging area, which should be clearly designated in SWMP drawings. The layout of the staging area may vary depending on the type of construction activity. Staging areas located in roadways due to space constraints require special measures to avoid materials being washed into storm inlets.

### Design and Installation

Stabilized staging areas should be completed prior to other construction activities beginning on the site. Major components of a stabilized staging area include:

- Appropriate space to contain storage and provide for loading/unloading operations, as well as parking if necessary.
- A stabilized surface, either paved or covered, with 3-inch diameter aggregate or larger.
- Perimeter controls such as silt fence, sediment control logs, or other measures.
- Construction fencing to prevent unauthorized access to construction materials.
- Provisions for Good Housekeeping practices related to materials storage and disposal, as described in the Good Housekeeping BMP Fact Sheet.
- A stabilized construction entrance/exit, as described in the Vehicle Tracking Control BMP Fact Sheet, to accommodate traffic associated with material delivery and waste disposal vehicles.

Over-sizing the stabilized staging area may result in disturbance of existing vegetation in excess of that required for the project. This increases costs, as well as requirements for long-term stabilization following the construction period. When designing the stabilized staging area, minimize the area of disturbance to the extent practical.

| Stabilized Staging Area | |
|---|---|
| **Functions** | |
| Erosion Control | Yes |
| Sediment Control | Moderate |
| Site/Material | Yes |



| NO. | REVISION | BY | DATE | APPR. |
|---|---|---|---|---|

Kimley»Horn
2024 KIMLEY-HORN AND ASSOCIATES, INC.
2 North Nevada Avenue Suite 900
Colorado Springs, Colorado 80903 (719) 453-0180

DESIGNED BY: KRK
DRAWN BY: AJL
CHECKED BY: KRK
DATE: 08/01/2024

OVERLOOK AT HOMESTEAD FILING NO. 1
EL PASO COUNTY, COLORADO
PRE DEVELOPMENT GESC PLAN
DETAIL SHEET (1 OF 7)

COLORADO LICENSED PROFESSIONAL ENGINEER KRISTIN REX KOFFORD 57234 9/9/2024

PROJECT NO. 196239003

SHEET 1.19

EPC 9/17/2024

k:\cos_civil\196239003_overlook\CADD\PlanSheets\EG\EG_GEC_DT.dwg Kofford, Kevin 9/9/2024 1:11 PM

**Minimizing Long-Term Stabilization Requirements**

- Utilize off-site parking and restrict vehicle access to the site.
- Use construction mats in lieu of rock when staging is provided in an area that will not be disturbed otherwise.
- Consider use of a bermed contained area for materials and equipment that do not require a stabilized surface.
- Consider phasing of staging areas to avoid disturbance in an area that will not be otherwise disturbed.

See Detail SSA-1 for a typical stabilized staging area and SSA-2 for a stabilized staging area when materials staging in roadways is required.

## Maintenance and Removal

Maintenance of stabilized staging areas includes maintaining a stable surface cover of gravel, repairing perimeter controls, and following good housekeeping practices.

When construction is complete, debris, unused stockpiles and materials should be recycled or properly disposed. In some cases, this will require disposal of contaminated soil from equipment leaks in an appropriate landfill. Staging areas should then be permanently stabilized with vegetation or other surface cover planned for the development.





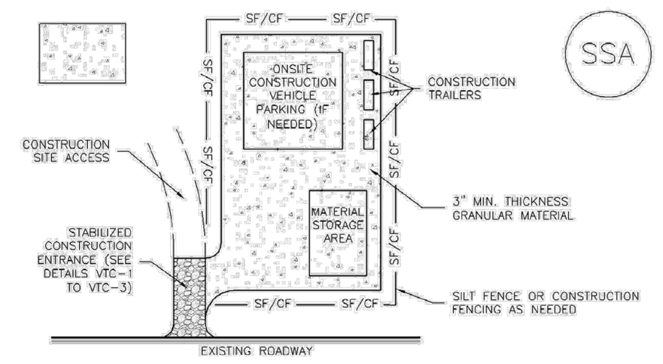


SSA-1. STABILIZED STAGING AREA

STABILIZED STAGING AREA INSTALLATION NOTES

1. SEE PLAN VIEW FOR
   -LOCATION OF STAGING AREA(S).
   -CONTRACTOR MAY ADJUST LOCATION AND SIZE OF STAGING AREA WITH APPROVAL FROM THE LOCAL JURISDICTION.

2. STABILIZED STAGING AREA SHOULD BE APPROPRIATE FOR THE NEEDS OF THE SITE. OVERSIZING RESULTS IN A LARGER AREA TO STABILIZE FOLLOWING CONSTRUCTION.

3. STAGING AREA SHALL BE STABILIZED PRIOR TO OTHER OPERATIONS ON THE SITE.

4. THE STABILIZED STAGING AREA SHALL CONSIST OF A MINIMUM 3" THICK GRANULAR MATERIAL.

5. UNLESS OTHERWISE SPECIFIED BY LOCAL JURISDICTION, ROCK SHALL CONSIST OF DOT SECT. #703, AASHTO #3 COARSE AGGREGATE OR 6" (MINUS) ROCK.

6. ADDITIONAL PERIMETER BMPs MAY BE REQUIRED INCLUDING BUT NOT LIMITED TO SILT FENCE AND CONSTRUCTION FENCING.

STABILIZED STAGING AREA MAINTENANCE NOTES

1. INSPECT BMPs EACH WORKDAY, AND MAINTAIN THEM IN EFFECTIVE OPERATING CONDITION. MAINTENANCE OF BMPs SHOULD BE PROACTIVE, NOT REACTIVE. INSPECT BMPs AS SOON AS POSSIBLE (AND ALWAYS WITHIN 24 HOURS) FOLLOWING A STORM THAT CAUSES SURFACE EROSION, AND PERFORM NECESSARY MAINTENANCE.

2. FREQUENT OBSERVATIONS AND MAINTENANCE ARE NECESSARY TO MAINTAIN BMPs IN EFFECTIVE OPERATING CONDITION. INSPECTIONS AND CORRECTIVE MEASURES SHOULD BE DOCUMENTED THOROUGHLY.

3. WHERE BMPs HAVE FAILED, REPAIR OR REPLACEMENT SHOULD BE INITIATED UPON DISCOVERY OF THE FAILURE.

4. ROCK SHALL BE REAPPLIED OR REGRADED AS NECESSARY IF RUTTING OCCURS OR UNDERLYING SUBGRADE BECOMES EXPOSED.





STABILIZED STAGING AREA MAINTENANCE NOTES

5. STABILIZED STAGING AREA SHALL BE ENLARGED IF NECESSARY TO CONTAIN PARKING, STORAGE, AND UNLOADING/LOADING OPERATIONS.

6. THE STABILIZED STAGING AREA SHALL BE REMOVED AT THE END OF CONSTRUCTION. THE GRANULAR MATERIAL SHALL BE REMOVED OR, IF APPROVED BY THE LOCAL JURISDICTION, USED ON SITE, AND THE AREA COVERED WITH TOPSOIL, SEEDED AND MULCHED OR OTHERWISE STABILIZED IN A MANNER APPROVED BY LOCAL JURISDICTION.

NOTE: MANY MUNICIPALITIES PROHIBIT THE USE OF RECYCLED CONCRETE AS GRANULAR MATERIAL FOR STABILIZED STAGING AREAS DUE TO DIFFICULTIES WITH RE-ESTABLISHMENT OF VEGETATION IN AREAS WHERE RECYCLED CONCRETE WAS PLACED.

NOTE: MANY JURISDICTIONS HAVE BMP DETAILS THAT VARY FROM UDFCD STANDARD DETAILS. CONSULT WITH LOCAL JURISDICTIONS AS TO WHICH DETAIL SHOULD BE USED WHEN DIFFERENCES ARE NOTED.

(DETAILS ADAPTED FROM DOUGLAS COUNTY, COLORADO, NOT AVAILABLE IN AUTOCAD)





## Description

Concrete waste management involves designating and properly managing a specific area of the construction site as a concrete washout area. A concrete washout area can be created using one of several approaches designed to receive wash water from washing of tools and concrete mixer chutes, liquid concrete waste from dump trucks, mobile batch mixers, or pump trucks. Three basic approaches are available: excavation of a pit in the ground, use of an above ground storage area, or use of prefabricated haul-away concrete washout containers. Surface discharges of concrete washout water from construction sites are prohibited.

**Photograph CWA-1.** Example of concrete washout area. Note gravel tracking pad for access and sign.

## Appropriate Uses

Concrete washout areas must be designated on all sites that will generate concrete wash water or liquid concrete waste from onsite concrete mixing or concrete delivery.

Because pH is a pollutant of concern for washout activities, when unlined pits are used for concrete washout, the soil must have adequate buffering capacity to result in protection of state groundwater standards; otherwise, a liner/containment must be used. The following management practices are recommended to prevent an impact from unlined pits to groundwater:

- The use of the washout site should be temporary (less than 1 year), and
- The washout site should be not be located in an area where shallow groundwater may be present, such as near natural drainages, springs, or wetlands.

## Design and Installation

Concrete washout activities must be conducted in a manner that does not contribute pollutants to surface waters or stormwater runoff. Concrete washout areas may be lined or unlined excavated pits in the ground, commercially manufactured prefabricated washout containers, or aboveground holding areas constructed of berms, sandbags or straw bales with a plastic liner.

Although unlined washout areas may be used, lined pits may be required to protect groundwater under certain conditions.

**Do not locate an unlined washout area within 400 feet of any natural drainage pathway or waterbody or within 1,000 feet of any wells or drinking water sources.** Even for lined concrete washouts, it is advisable to locate the facility away from waterbodies and drainage paths. If site constraints make these

| Concrete Washout Area | |
|---|---|
| **Functions** | |
| Erosion Control | No |
| Sediment Control | No |
| Site/Material Management | Yes |





setbacks infeasible or if highly permeable soils exist in the area, then the pit must be installed with an impermeable liner (16 mil minimum thickness) or surface storage alternatives using prefabricated concrete washout devices or a lined aboveground storage area should be used.

Design details with notes are provided in Detail CWA-1 for pits and CWA-2 for aboveground storage areas. Pre-fabricated concrete washout container information can be obtained from vendors.

## Maintenance and Removal

A key consideration for concrete washout areas is to ensure that adequate signage is in place identifying the location of the washout area. Part of inspecting and maintaining washout areas is ensuring that adequate signage is provided and in good repair and that the washout area is being used, as opposed to washout in non-designated areas of the site.

Remove concrete waste in the washout area, as needed to maintain BMP function (typically when filled to about two-thirds of its capacity). Collect concrete waste and deliver offsite to a designated disposal location.

Upon termination of use of the washout site, accumulated solid waste, including concrete waste and any contaminated soils, must be removed from the site to prevent on-site disposal of solid waste. If the wash water is allowed to evaporate and the concrete hardens, it may be recycled.

**Photograph CWA-2.** Prefabricated concrete washout. Photo courtesy of CDOT.

**Photograph CWA-3.** Earthen concrete washout. Photo courtesy of CDOT.





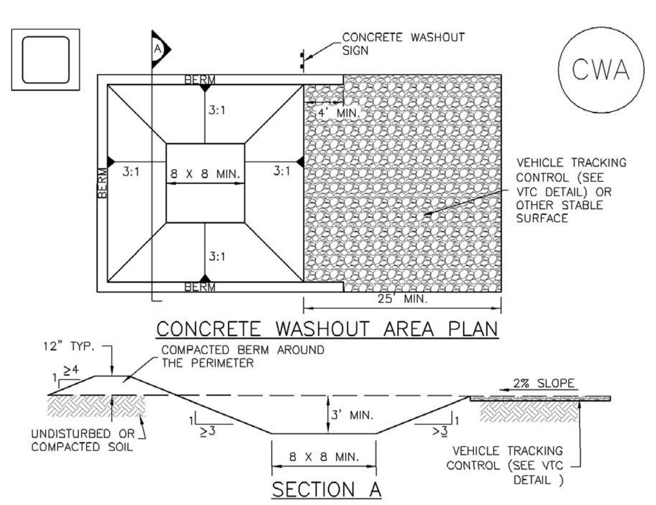


CWA-1. CONCRETE WASHOUT AREA

CWA INSTALLATION NOTES

1. SEE PLAN VIEW FOR:
   -CWA INSTALLATION LOCATION.

2. DO NOT LOCATE AN UNLINED CWA WITHIN 400' OF ANY NATURAL DRAINAGE PATHWAY OR WATERBODY. DO NOT LOCATE WITHIN 1,000' OF ANY WELLS OR DRINKING WATER SOURCES. IF SITE CONSTRAINTS MAKE THIS INFEASIBLE, OR IF HIGHLY PERMEABLE SOILS EXIST ON SITE, THE CWA MUST BE INSTALLED WITH AN IMPERMEABLE LINER (16 MIL MIN. THICKNESS) OR SURFACE STORAGE ALTERNATIVES USING PREFABRICATED CONCRETE WASHOUT DEVICES OR A LINED ABOVE GROUND STORAGE ARE SHOULD BE USED.

3. THE CWA SHALL BE INSTALLED PRIOR TO CONCRETE PLACEMENT ON SITE.

4. CWA SHALL INCLUDE A FLAT SUBSURFACE PIT THAT IS AT LEAST 8' BY 8' SLOPES LEADING OUT OF THE SUBSURFACE PIT SHALL BE 3:1 OR FLATTER. THE PIT SHALL BE AT LEAST 3' DEEP.

5. BERM SURROUNDING SIDES AND BACK OF THE CWA SHALL HAVE MINIMUM HEIGHT OF 1'.

6. VEHICLE TRACKING PAD SHALL BE SLOPED 2% TOWARDS THE CWA.

7. SIGNS SHALL BE PLACED AT THE CONSTRUCTION ENTRANCE, AT THE CWA, AND ELSEWHERE AS NECESSARY TO CLEARLY INDICATE THE LOCATION OF THE CWA TO OPERATORS OF CONCRETE TRUCKS AND PUMP RIGS.

8. USE EXCAVATED MATERIAL FOR PERIMETER BERM CONSTRUCTION.





CWA MAINTENANCE NOTES

1. INSPECT BMPs EACH WORKDAY, AND MAINTAIN THEM IN EFFECTIVE OPERATING CONDITION. MAINTENANCE OF BMPs SHOULD BE PROACTIVE, NOT REACTIVE. INSPECT BMPs AS SOON AS POSSIBLE (AND ALWAYS WITHIN 24 HOURS) FOLLOWING A STORM THAT CAUSES SURFACE EROSION, AND PERFORM NECESSARY MAINTENANCE.

2. FREQUENT OBSERVATIONS AND MAINTENANCE ARE NECESSARY TO MAINTAIN BMPs IN EFFECTIVE OPERATING CONDITION. INSPECTIONS AND CORRECTIVE MEASURES SHOULD BE DOCUMENTED THOROUGHLY.

3. WHERE BMPs HAVE FAILED, REPAIR OR REPLACEMENT SHOULD BE INITIATED UPON DISCOVERY OF THE FAILURE.

4. THE CWA SHALL BE REPAIRED, CLEANED, OR ENLARGED AS NECESSARY TO MAINTAIN CAPACITY FOR CONCRETE WASTE. CONCRETE MATERIALS, ACCUMULATED IN PIT, SHALL BE REMOVED ONCE THE MATERIALS HAVE REACHED A DEPTH OF 2'.

5. CONCRETE WASHOUT WATER, WASTED PIECES OF CONCRETE AND ALL OTHER DEBRIS IN THE SUBSURFACE PIT SHALL BE TRANSPORTED FROM THE JOB SITE IN A WATER-TIGHT CONTAINER AND DISPOSED OF PROPERLY.

6. THE CWA SHALL REMAIN IN PLACE UNTIL ALL CONCRETE FOR THE PROJECT IS PLACED.

7. WHEN THE CWA IS REMOVED, COVER THE DISTURBED AREA WITH TOP SOIL, SEED AND MULCH OR OTHERWISE STABILIZED IN A MANNER APPROVED BY THE LOCAL JURISDICTION.

(DETAIL ADAPTED FROM DOUGLAS COUNTY, COLORADO AND THE CITY OF PARKER, COLORADO, NOT AVAILABLE IN AUTOCAD).

NOTE: MANY JURISDICTIONS HAVE BMP DETAILS THAT VARY FROM UDFCD STANDARD DETAILS. CONSULT WITH LOCAL JURISDICTIONS AS TO WHICH DETAIL SHOULD BE USED WHEN DIFFERENCES ARE NOTED.





## Description

Stockpile management includes measures to minimize erosion and sediment transport from soil stockpiles.

## Appropriate Uses

Stockpile management should be used when soils or other erodible materials are stored at the construction site. Special attention should be given to stockpiles in close proximity to natural or manmade storm systems.

**Photograph SP-1.** A topsoil stockpile that has been partially revegetated and is protected by silt fence perimeter control.

## Design and Installation

Locate stockpiles away from all drainage system components including storm sewer inlets. Where practical, choose stockpile locations that that will remain undisturbed for the longest period of time as the phases of construction progress. Place sediment control BMPs around the perimeter of the stockpile, such as sediment control logs, rock socks, silt fence, straw bales and sand bags. See Detail SP-1 for guidance on proper establishment of perimeter controls around a stockpile. For stockpiles in active use, provide a stabilized designated access point on the upgradient side of the stockpile.

Stabilize the stockpile surface with surface roughening, temporary seeding and mulching, erosion control blankets, or soil binders. Soils stockpiled for an extended period (typically for more than 60 days) should be seeded and mulched with a temporary grass cover once the stockpile is placed (typically within 14 days). Use of mulch only or a soil binder is acceptable if the stockpile will be in place for a more limited time period (typically 30-60 days). Timeframes for stabilization of stockpiles noted in this fact sheet are "typical" guidelines. Check permit requirements for specific federal, state, and/or local requirements that may be more prescriptive.

Stockpiles should not be placed in streets or paved areas unless no other practical alternative exists. See the Stabilized Staging Area Fact Sheet for guidance when staging in roadways is unavoidable due to space or right-of-way constraints. For paved areas, rock socks must be used for perimeter control and all inlets with the potential to receive sediment from the stockpile (even from vehicle tracking) must be protected.

## Maintenance and Removal

Inspect perimeter controls and inlet protection in accordance with their respective BMP Fact Sheets. Where seeding, mulch and/or soil binders are used, reseeding or reapplication of soil binder may be necessary.

When temporary removal of a perimeter BMP is necessary to access a stockpile, ensure BMPs are reinstalled in accordance with their respective design detail section.

| Stockpile Management | |
|---|---|
| **Functions** | |
| Erosion Control | Yes |
| Sediment Control | Yes |
| Site/Material Management | Yes |





When the stockpile is no longer needed, properly dispose of excess materials and revegetate or otherwise stabilize the ground surface where the stockpile was located.





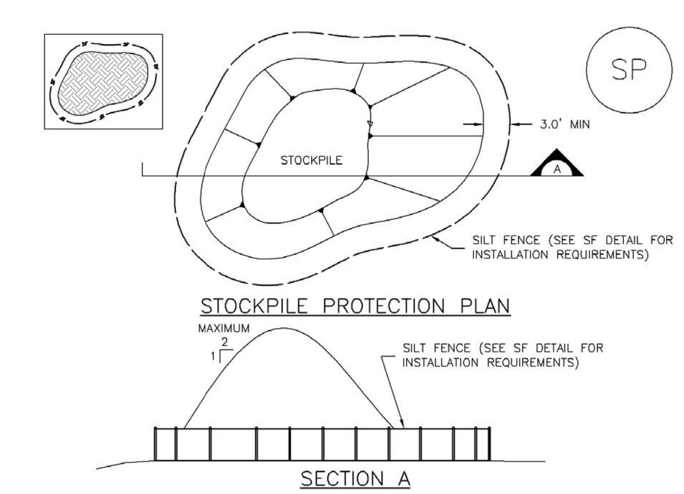


SP-1. STOCKPILE PROTECTION

STOCKPILE PROTECTION INSTALLATION NOTES

1. SEE PLAN VIEW FOR:
   -LOCATION OF STOCKPILES.
   -TYPE OF STOCKPILE PROTECTION.

2. INSTALL PERIMETER CONTROLS IN ACCORDANCE WITH THEIR RESPECTIVE DESIGN DETAILS. SILT FENCE IS SHOWN IN THE STOCKPILE PROTECTION DETAILS; HOWEVER, OTHER TYPES OF PERIMETER CONTROLS INCLUDING SEDIMENT CONTROL LOGS OR ROCK SOCKS MAY BE SUITABLE IN SOME CIRCUMSTANCES. CONSIDERATIONS FOR DETERMINING THE APPROPRIATE TYPE OF PERIMETER CONTROL FOR A STOCKPILE INCLUDE WHETHER THE STOCKPILE IS LOCATED ON A PERVIOUS OR IMPERVIOUS SURFACE, THE RELATIVE HEIGHTS OF THE PERIMETER CONTROL AND STOCKPILE, THE ABILITY OF THE PERIMETER CONTROL TO CONTAIN THE STOCKPILE WITHOUT FAILING IN THE EVENT THAT MATERIAL FROM THE STOCKPILE SHIFTS OR SLUMPS AGAINST THE PERIMETER, AND OTHER FACTORS.

3. STABILIZE THE STOCKPILE SURFACE WITH SURFACE ROUGHENING, TEMPORARY SEEDING AND MULCHING, EROSION CONTROL BLANKETS, OR SOIL BINDERS. SOILS STOCKPILED FOR AN EXTENDED PERIOD (TYPICALLY FOR MORE THAN 60 DAYS) SHOULD BE SEEDED AND MULCHED WITH A TEMPORARY GRASS COVER ONCE THE STOCKPILE IS PLACED (TYPICALLY WITHIN 14 DAYS). USE OF MULCH ONLY OR A SOIL BINDER IS ACCEPTABLE IF THE STOCKPILE WILL BE IN PLACE FOR A MORE LIMITED TIME PERIOD (TYPICALLY 30-60 DAYS).

4. FOR TEMPORARY STOCKPILES ON THE INTERIOR PORTION OF A CONSTRUCTION SITE, WHERE OTHER DOWNGRADIENT CONTROLS, INCLUDING PERIMETER CONTROL, ARE IN PLACE, STOCKPILE PERIMETER CONTROLS MAY NOT BE REQUIRED.



| NO. | REVISION | BY | DATE | APPR. |
|---|---|---|---|---|

Kimley-Horn
2024 KIMLEY-HORN AND ASSOCIATES, INC.
2 North Nevada Avenue Suite 900
Colorado Springs, Colorado 80903 (719) 453-0180

DESIGNED BY: KRK
DRAWN BY: AJL
CHECKED BY: KRK
DATE: 08/01/2024

OVERLOOK AT HOMESTEAD FILING NO. 1
EL PASO COUNTY, COLORADO
PRE DEVELOPMENT GESC PLAN
DETAIL SHEET (2 OF 7)

COLORADO LICENSED PROFESSIONAL ENGINEER KEVIN REX KOFFORD 57234 9/9/2024

PROJECT NO. 196239003

SHEET 1.20

k:\cos_civil\196239003_overlook\CADD\PlanSheets\EG\EG_GEC_DT.dwg Kofford, Kevin 9/9/2024 1:11 PM

EPC 9/17/2024

STOCKPILE PROTECTION MAINTENANCE NOTES

1. INSPECT BMPs EACH WORKDAY, AND MAINTAIN THEM IN EFFECTIVE OPERATING CONDITION. MAINTENANCE OF BMPs SHOULD BE PROACTIVE, NOT REACTIVE. INSPECT BMPs AS SOON AS POSSIBLE (AND ALWAYS WITHIN 24 HOURS) FOLLOWING A STORM THAT CAUSES SURFACE EROSION, AND PERFORM NECESSARY MAINTENANCE.

2. FREQUENT OBSERVATIONS AND MAINTENANCE ARE NECESSARY TO MAINTAIN BMPs IN EFFECTIVE OPERATING CONDITION. INSPECTIONS AND CORRECTIVE MEASURES SHOULD BE DOCUMENTED THOROUGHLY.

3. WHERE BMPs HAVE FAILED, REPAIR OR REPLACEMENT SHOULD BE INITIATED UPON DISCOVERY OF THE FAILURE.

STOCKPILE PROTECTION MAINTENANCE NOTES

4. IF PERIMETER PROTECTION MUST BE MOVED TO ACCESS SOIL STOCKPILE, REPLACE PERIMETER CONTROLS BY THE END OF THE WORKDAY.

5. STOCKPILE PERIMETER CONTROLS CAN BE REMOVED ONCE ALL THE MATERIAL FROM THE STOCKPILE HAS BEEN USED.

(DETAILS ADAPTED FROM PARKER, COLORADO, NOT AVAILABLE IN AUTOCAD)

NOTE: MANY JURISDICTIONS HAVE BMP DETAILS THAT VARY FROM UDFCD STANDARD DETAILS. CONSULT WITH LOCAL JURISDICTIONS AS TO WHICH DETAIL SHOULD BE USED WHEN DIFFERENCES ARE NOTED.





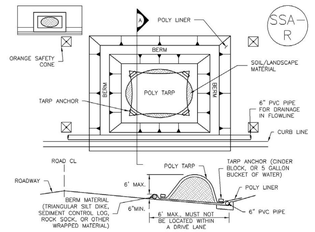


SP–2 MATERIALS STAGING IN ROADWAY

MATERIALS STAGING IN ROADWAYS INSTALLATION NOTES

1. SEE PLAN VIEW FOR
   –LOCATION OF MATERIAL STAGING AREA(S)
   –CONTRACTOR MAY ADJUST LOCATION AND SIZE OF STAGING AREA WITH APPROVAL FROM THE LOCAL JURISDICTION.

2. FEATURE MUST BE INSTALLED PRIOR TO EXCAVATION, EARTHWORK OR DELIVERY OF MATERIALS.

3. MATERIALS MUST BE STATIONED ON THE POLY LINER. ANY INCIDENTAL MATERIALS DEPOSITED ON PAVED SECTION OR ALONG CURB LINE MUST BE CLEANED UP PROMPTLY.

4. POLY LINER AND TARP COVER SHOULD BE OF SIGNIFICANT THICKNESS TO PREVENT DAMAGE OR LOSS OF INTEGRITY.

5. SAND BAGS MAY BE SUBSTITUTED TO ANCHOR THE COVER TARP OR PROVIDE BERMING UNDER THE BASE LINER.

6. FEATURE IS NOT INTENDED FOR USE WITH WET MATERIAL THAT WILL BE DRAINING AND/OR SPREADING OUT ON THE POLY LINER OR FOR DEMOLITION MATERIALS.

7. THIS FEATURE CAN BE USED FOR:
   –UTILITY REPAIRS,
   –WHEN OTHER STAGING LOCATIONS AND OPTIONS ARE LIMITED.
   –OTHER LIMITED APPLICATION AND SHORT DURATION STAGING.





MATERIALS STAGING IN ROADWAY MAINTENANCE NOTES

1. INSPECT BMPs EACH WORKDAY, AND MAINTAIN THEM IN EFFECTIVE OPERATING CONDITION. MAINTENANCE OF BMPs SHOULD BE PROACTIVE, NOT REACTIVE. INSPECT BMPs AS SOON AS POSSIBLE (AND ALWAYS WITHIN 24 HOURS) FOLLOWING A STORM THAT CAUSES SURFACE EROSION, AND PERFORM NECESSARY MAINTENANCE.

2. FREQUENT OBSERVATIONS AND MAINTENANCE ARE NECESSARY TO MAINTAIN BMPs IN EFFECTIVE OPERATING CONDITION. INSPECTIONS AND CORRECTIVE MEASURES SHOULD BE DOCUMENTED THOROUGHLY.

3. WHERE BMPs HAVE FAILED, REPAIR OR REPLACEMENT SHOULD BE INITIATED UPON DISCOVERY OF THE FAILURE.

4. INSPECT PVC PIPE ALONG CURB LINE FOR CLOGGING AND DEBRIS. REMOVE OBSTRUCTIONS PROMPTLY.

5. CLEAN MATERIAL FROM PAVED SURFACES BY SWEEPING OR VACUUMING.

NOTE: MANY JURISDICTIONS HAVE BMP DETAILS THAT VARY FROM UDFCD STANDARD DETAILS. CONSULT WITH LOCAL JURISDICTIONS AS TO WHICH DETAIL SHOULD BE USED WHEN DIFFERENCES ARE NOTED.

(DETAILS ADAPTED FROM AURORA, COLORADO)





## Description

Implement construction site good housekeeping practices to prevent pollution associated with solid, liquid and hazardous construction-related materials and wastes. Stormwater Management Plans (SWMPs) should clearly specify BMPs including these good housekeeping practices:

- Provide for waste management.
- Establish proper building material staging areas.
- Designate paint and concrete washout areas.
- Establish proper equipment/vehicle fueling and maintenance practices.
- Control equipment/vehicle washing and allowable non-stormwater discharges.
- Develop a spill prevention and response plan.

**Acknowledgement: This Fact Sheet is based directly on EPA guidance provided in *Developing Your Stormwater Pollution Prevent Plan* (EPA 2007).**

**Photographs GH-1 and GH-2.** Proper materials storage and secondary containment for fuel tanks are important good housekeeping practices. Photos courtesy of CDOT and City of Aurora.

## Appropriate Uses

Good housekeeping practices are necessary at all construction sites.

## Design and Installation

The following principles and actions should be addressed in SWMPs:

- **Provide for Waste Management.** Implement management procedures and practices to prevent or reduce the exposure and transport of pollutants in stormwater from solid, liquid and sanitary wastes that will be generated at the site. Practices such as trash disposal, recycling, proper material handling, and cleanup measures can reduce the potential for stormwater runoff to pick up construction site wastes and discharge them to surface waters. Implement a comprehensive set of waste-management practices for hazardous or toxic materials, such as paints, solvents, petroleum products, pesticides, wood preservatives, acids, roofing tar, and other materials. Practices should include storage, handling, inventory, and cleanup procedures, in case of spills. Specific practices that should be considered include:

**Solid or Construction Waste**

- Designate trash and bulk waste-collection areas on-site.

| Good Housekeeping | |
|---|---|
| **Functions** | |
| Erosion Control | No |
| Sediment Control | No |
| Site/Material Management | Yes |





- Recycle materials whenever possible (e.g., paper, wood, concrete, oil).
- Segregate and provide proper disposal options for hazardous material wastes.
- Clean up litter and debris from the construction site daily.
- Locate waste-collection areas away from streets, gutters, watercourses, and storm drains. Waste-collection areas (dumpsters, and such) are often best located near construction site entrances to minimize traffic on disturbed soils. Consider secondary containment around waste collection areas to minimize the likelihood of contaminated discharges.
- Empty waste containers before they are full and overflowing.

**Sanitary and Septic Waste**

- Provide convenient, well-maintained, and properly located toilet facilities on-site.
- Locate toilet facilities away from storm drain inlets and waterways to prevent accidental spills and contamination of stormwater.
- Maintain clean restroom facilities and empty portable toilets regularly.
- Where possible, provide secondary containment pans under portable toilets.
- Provide tie-downs or stake-downs for portable toilets.
- Educate employees, subcontractors, and suppliers on locations of facilities.
- Treat or dispose of sanitary and septic waste in accordance with state or local regulations. Do not discharge or bury wastewater at the construction site.
- Inspect facilities for leaks. If found, repair or replace immediately.
- Special care is necessary during maintenance (pump out) to ensure that waste and/or biocide are not spilled on the ground.

**Hazardous Materials and Wastes**

- Develop and implement employee and subcontractor education, as needed, on hazardous and toxic waste handling, storage, disposal, and cleanup.
- Designate hazardous waste-collection areas on-site.
- Place all hazardous and toxic material wastes in secondary containment.

**Photograph GH-3.** Locate portable toilet facilities on level surfaces away from waterways and storm drains. Photo courtesy of WWE.





- Hazardous waste containers should be inspected to ensure that all containers are labeled properly and that no leaks are present.

- **Establish Proper Building Material Handling and Staging Areas**. The SWMP should include comprehensive handling and management procedures for building materials, especially those that are hazardous or toxic. Paints, solvents, pesticides, fuels and oils, other hazardous materials or building materials that have the potential to contaminate stormwater should be stored indoors or under cover whenever possible or in areas with secondary containment. Secondary containment measures prevent a spill from spreading across the site and may include dikes, berms, curbing, or other containment methods. Secondary containment techniques should also ensure the protection of groundwater. Designate staging areas for activities such as fueling vehicles, mixing paints, plaster, mortar, and other potential pollutants. Designated staging areas enable easier monitoring of the use of materials and clean up of spills. Training employees and subcontractors is essential to the success of this pollution prevention principle. Consider the following specific materials handling and staging practices:
  - Train employees and subcontractors in proper handling and storage practices.
  - Clearly designate site areas for staging and storage with signs and on construction drawings. Staging areas should be located in areas central to the construction site. Segment the staging area into sub-areas designaed for vehicles, equipment, or stockpiles. Construction entrances and exits should be clearly marked so that delivery vehicles enter/exit through stabilized areas with vehicle tracking controls (See Vehicle Tracking Control Fact Sheet).
  - Provide storage in accordance with Spill Protection, Control and Countermeasures (SPCC) requirements and plans and provide cover and impermeable perimeter control, as necessary, for hazardous materials and contaminated soils that must be stored on site.
  - Ensure that storage containers are regularly inspected for leaks, corrosion, support or foundation failure, or other signs of deterioration and tested for soundness.
  - Reuse and recycle construction materials when possible.
- **Designate Concrete Washout Areas**. Concrete contractors should be encouraged to use the washout facilities at their own plants or dispatch facilities when feasible; however, concrete washout commonly occurs on construction sites. If it is necessary to provide for concrete washout areas on-site, designate specific washout areas and design facilities to handle anticipated washout water. Washout areas should also be provided for paint and stucco operations. Because washout areas can be a source of pollutants from leaks or spills, care must be taken with regard to their placement and proper use. See the Concrete Washout Area Fact Sheet for detailed guidance.

  Both self-constructed and prefabricated washout containers can fill up quickly when concrete, paint, and stucco work are occurring on large portions of the site. Be sure to check for evidence that contractors are using the washout areas and not dumping materials onto the ground or into drainage facilities. If the washout areas are not being used regularly, consider posting additional signage, relocating the facilities to more convenient locations, or providing training to workers and contractors.

  When concrete, paint, or stucco is part of the construction process, consider these practices which will help prevent contamination of stormwater. Include the locations of these areas and the maintenance and inspection procedures in the SWMP.





- Do not washout concrete trucks or equipment into storm drains, streets, gutters, uncontained areas, or streams. Only use designated washout areas.
- Establish washout areas and advertise their locations with signs. Ensure that signage remains in good repair.
- Provide adequate containment for the amount of wash water that will be used.
- Inspect washout structures daily to detect leaks or tears and to identify when materials need to be removed.
- Dispose of materials properly. The preferred method is to allow the water to evaporate and to recycle the hardened concrete. Full service companies may provide dewatering services and should dispose of wastewater properly. Concrete wash water can be highly polluted. It should not be discharged to any surface water, storm sewer system, or allowed to infiltrate into the ground in the vicinity of waterbodies. Washwater should not be discharged to a sanitary sewer system without first receiving written permission from the system operator.

- **Establish Proper Equipment/Vehicle Fueling and Maintenance Practices**. Create a clearly designated on-site fueling and maintenance area that is clean and dry. The on-site fueling area should have a spill kit, and staff should know how to use it. If possible, conduct vehicle fueling and maintenance activities in a covered area. Consider the following practices to help prevent the discharge of pollutants to stormwater from equipment/vehicle fueling and maintenance. Include the locations of designated fueling and maintenance areas and inspection and maintenance procedures in the SWMP.
  - Train employees and subcontractors in proper fueling procedures (stay with vehicles during fueling, proper use of pumps, emergency shutoff valves, etc.).
  - Inspect on-site vehicles and equipment regularly for leaks, equipment damage, and other service problems.
  - Clearly designate vehicle/equipment service areas away from drainage facilities and watercourses to prevent stormwater run-on and runoff.
  - Use drip pans, drip cloths, or absorbent pads when replacing spent fluids.
  - Collect all spent fluids, store in appropriate labeled containers in the proper storage areas, and recycle fluids whenever possible.
- **Control Equipment/Vehicle Washing and Allowable Non-Stormwater Discharges.** Implement practices to prevent contamination of surface and groundwater from equipment and vehicle wash water. Representative practices include:
  - Educate employees and subcontractors on proper washing procedures.
  - Use off-site washing facilities, when available.
  - Clearly mark the washing areas and inform workers that all washing must occur in this area.
  - Contain wash water and treat it using BMPs. Infiltrate washwater when possible, but maintain separation from drainage paths and waterbodies.





- Use high-pressure water spray at vehicle washing facilities without detergents. Water alone can remove most dirt adequately.
- Do not conduct other activities, such as vehicle repairs, in the wash area.
- Include the location of the washing facilities and the inspection and maintenance procedures in the SWMP.

- **Develop a Spill Prevention and Response Plan.** Spill prevention and response procedures must be identified in the SWMP. Representative procedures include identifying ways to reduce the chance of spills, stop the source of spills, contain and clean up spills, dispose of materials contaminated by spills, and train personnel responsible for spill prevention and response. The plan should also specify material handling procedures and storage requirements and ensure that clear and concise spill cleanup procedures are provided and posted for areas in which spills may potentially occur. When developing a spill prevention plan, include the following:
  - Note the locations of chemical storage areas, storm drains, tributary drainage areas, surface waterbodies on or near the site, and measures to stop spills from leaving the site.
  - Provide proper handling and safety procedures for each type of waste. Keep Material Safety Data Sheets (MSDSs) for chemical used on site with the SWMP.
  - Establish an education program for employees and subcontractors on the potential hazards to humans and the environment from spills and leaks.
  - Specify how to notify appropriate authorities, such as police and fire departments, hospitals, or municipal sewage treatment facilities to request assistance. Emergency procedures and contact numbers should be provided in the SWMP and posted at storage locations.
  - Describe the procedures, equipment and materials for immediate cleanup of spills and proper disposal.
  - Identify personnel responsible for implementing the plan in the event of a spill. Update the spill prevention plan and clean up materials as changes occur to the types of chemicals stored and used at the facility.





**Spill Prevention, Control, and Countermeasure (SPCC) Plan**

Construction sites may be subject to 40 CFR Part 112 regulations that require the preparation and implementation of a SPCC Plan to prevent oil spills from aboveground and underground storage tanks. The facility is subject to this rule if it is a non-transportation-related facility that:

- Has a total storage capacity greater than 1,320 gallons or a completely buried storage capacity greater than 42,000 gallons.
- Could reasonably be expected to discharge oil in quantities that may be harmful to navigable waters of the United States and adjoining shorelines.

Furthermore, if the facility is subject to 40 CFR Part 112, the SWMP should reference the SPCC Plan. To find out more about SPCC Plans, see EPA's website on SPPC at www.epa.gov/oilspill/spcc.htm.

**Reporting Oil Spills**

In the event of an oil spill, contact the National Response Center toll free at 1-800-424- 8802 for assistance, or for more details, visit their website: www.nrc.uscg.mil.

## Maintenance and Removal

Effective implementation of good housekeeping practices is dependent on clear designation of personnel responsible for supervising and implementing good housekeeping programs, such as site cleanup and disposal of trash and debris, hazardous material management and disposal, vehicle and equipment maintenance, and other practices. Emergency response "drills" may aid in emergency preparedness.

Checklists may be helpful in good housekeeping efforts.

Staging and storage areas require permanent stabilization when the areas are no longer being used for construction-related activities.

Construction-related materials, debris and waste must be removed from the construction site once construction is complete.

## Design Details

See the following Fact Sheets for related Design Details:

MM-1 Concrete Washout Area

MM-2 Stockpile Management

SM-4 Vehicle Tracking Control

Design details are not necessary for other good housekeeping practices; however, be sure to designate where specific practices will occur on the appropriate construction drawings.



| NO. | REVISION | BY | DATE | APPR. |
|---|---|---|---|---|

Kimley»Horn
2024 KIMLEY-HORN AND ASSOCIATES, INC.
2 North Nevada Avenue Suite 900
Colorado Springs, Colorado 80903 (719) 453-0180

DESIGNED BY: KRK
DRAWN BY: AJL
CHECKED BY: KRK
DATE: 08/01/2024

OVERLOOK AT HOMESTEAD FILING NO. 1
EL PASO COUNTY, COLORADO
PRE DEVELOPMENT GESC PLAN
DETAIL SHEET (3 OF 7)

COLORADO LICENSED
KEVIN REX KOFFORD
57234
9/9/2024
PROFESSIONAL ENGINEER

PROJECT NO. 196239003

SHEET 1.21

k:\cos_civil\196239003_overlook\CADD\PlanSheets\EG\EG_GEC_DT.dwg Kofford, Kevin 9/9/2024 1:12 PM

EPC 9/17/2024

## Description

**Photograph TS/PS -1.** Equipment used to drill seed. Photo courtesy of Douglas County.

Temporary seeding can be used to stabilize disturbed areas that will be inactive for an extended period. Permanent seeding should be used to stabilize areas at final grade that will not be otherwise stabilized. Effective seeding includes preparing a seedbed, selecting an appropriate seed mixture, using proper planting techniques, and protecting the seeded area with mulch, geotextiles, or other appropriate measures.

## Appropriate Uses

When the soil surface is disturbed and will remain inactive for an extended period (typically determined by local government requirements), proactive stabilization measures, including planting a temporary seed mix, should be implemented. If the inactive period is short-lived (on the order of two weeks), techniques such as surface roughening may be appropriate. For longer periods of inactivity of up to one year, temporary seeding and mulching can provide effective erosion control. Permanent seeding should be used on finished areas that have not been otherwise stabilized.

The USDCM Volume 2 *Revegetation* Chapter contains suggested annual grains and native seed mixes to use for temporary seeding. Alternatively, local governments may have their own seed mixes and timelines for seeding. Check jurisdictional requirements for seeding and temporary stabilization.

## Design and Installation

Effective seeding requires proper seedbed preparation, selecting an appropriate seed mixture, using appropriate seeding equipment to ensure proper coverage and density, and protecting seeded areas with mulch or fabric until plants are established.

The USDCM Volume 2 *Revegetation* Chapter contains detailed seed mixes, soil preparation practices, and seeding and mulching recommendations that should be referenced to supplement this Fact Sheet.

Drill seeding is the preferred seeding method. Hydroseeding is not recommended except in areas where steep slopes prevent use of drill seeding equipment, and even in these instances it is preferable to hand seed and mulch. Some jurisdictions do not allow hydroseeding or hydromulching.

| Temporary and Permanent Seeding | |
|---|---|
| **Functions** | |
| Erosion Control | Yes |
| Sediment Control | No |
| Site/Material Management | No |

### Seedbed Preparation

Prior to seeding, ensure that areas to be revegetated have soil conditions capable of supporting vegetation. Overlot grading can result in loss of topsoil and compaction, resulting in poor quality subsoils at the ground surface that





have low nutrient value, little organic matter content, few soil microorganisms, rooting restrictions, and conditions less conducive to infiltration of precipitation. As a result, it is typically necessary to provide stockpiled topsoil, compost, or other soil amendments and rototill them into the soil to a depth of 6 inches or more.

Topsoil should be salvaged during grading operations for use and spread on areas to be revegetated later. Topsoil should be viewed as an important resource to be utilized for vegetation establishment, due to its water-holding capacity, structure, texture, organic matter content, biological activity, and nutrient content. The rooting depth of most native grasses in the semi-arid Denver metropolitan area is 6 to 18 inches. If present, at a minimum of the upper 6 inches of topsoil should be stripped, stockpiled, and ultimately respread across areas that will be revegetated.

Where topsoil is not available, subsoils should be amended to provide an appropriate plant-growth medium. Organic matter, such as well digested compost, can be added to improve soil characteristics conducive to plant growth. Other treatments can be used to adjust soil pH conditions when needed. Soil testing, which is typically inexpensive, should be completed to determine and optimize the types and amounts of amendments that are required.

If the disturbed ground surface is compacted, rip or rototill the upper 12 inches of the surface prior to placing topsoil. If adding compost to the existing soil surface, rototilling is necessary. Surface roughening will assist in placing a stable topsoil layer on steeper slopes, and allow infiltration and root penetration to greater depth. Topsoil should not be placed when either the salvaged topsoil or receiving ground are frozen or snow covered.

Prior to seeding, the soil surface should be rough and the seedbed should be firm, but neither too loose nor compacted. The upper layer of soil should be in a condition suitable for seeding at the proper depth and conducive to plant growth. Seed-to-soil contact is the key to good germination.

Refer to MHFD's Topsoil Management Guidance for detailed information on topsoil assessment, design, and construction.

### Temporary Vegetation

To provide temporary vegetative cover on disturbed areas which will not be paved, built upon, or fully landscaped or worked for an extended period (typically 30 days or more), plant an annual grass appropriate for the time of planting and mulch the planted areas. Temporary grain seed mixes suitable for the Denver metropolitan area are listed in Table TS/PS-1. Native temporary seed mixes are provided in USDCM Volume 2, Chapter 13, Appendix A. These are to be considered only as general recommendations when specific design guidance for a particular site is not available. Local governments typically specify seed mixes appropriate for their jurisdiction.

### Permanent Revegetation

To provide vegetative cover on disturbed areas that have reached final grade, a perennial grass mix should be established. Permanent seeding should be performed promptly (typically within 14 days) after reaching final grade. Each site will have different characteristics and a landscape professional or the local jurisdiction should be contacted to determine the most suitable seed mix for a specific site. In lieu of a specific recommendation, one of the perennial grass mixes appropriate for site conditions and growth season listed in seed mix tables in the USDCM Volume 2 *Revegetation* Chapter can be used. The pure live seed (PLS) rates of application recommended in these tables are considered to be absolute minimum rates for seed applied using proper drill-seeding equipment. These are to be considered only as general





recommendations when specific design guidance for a particular site is not available. Local governments typically specify seed mixes appropriate for their jurisdiction.

If desired for wildlife habitat or landscape diversity, shrubs such as rubber rabbitbrush (*Chrysothamnus nauseosus*), fourwing saltbush (*Atriplex canescens*) and skunkbrush sumac (*Rhus trilobata*) could be added to the upland seed mixes at 0.25, 0.5 and 1 pound PLS/acre, respectively. In riparian zones, planting root stock of such species as American plum (*Prunus americana*), woods rose (*Rosa woodsii*), plains cottonwood (*Populus sargentii*), and willow (*Salix spp.*) may be considered. On non-topsoiled upland sites, a legume such as Ladak alfalfa at 1 pound PLS/acre can be included as a source of nitrogen for perennial grasses.

Timing of seeding is an important aspect of the revegetation process. For upland and riparian areas on the Colorado Front Range, the suitable timing for seeding is from October through May. The most favorable time to plant non-irrigated areas is during the fall, so that seed can take advantage of winter and spring moisture. Seed should not be planted if the soil is frozen, snow covered, or wet.

Seeding dates for the highest success probability of perennial species along the Front Range are generally in the spring from April through early May and in the fall after the first of September until the ground freezes. If the area is irrigated, seeding may occur in summer months, as well. See Table TS/PS-2 for appropriate seeding dates.





**Table TS/PS-1. Minimum Drill Seeding Rates for Various Temporary Annual Grasses**

| Species[a] (Common name) | Growth Season[b] | Pounds of Pure Live Seed (PLS)/acre[c] | Planting Depth (inches) |
|---|---|---|---|
| 1. Oats | Cool | 35 - 50 | 1 - 2 |
| 2. Spring wheat | Cool | 25 - 35 | 1 - 2 |
| 3. Spring barley | Cool | 25 - 35 | 1 - 2 |
| 4. Annual ryegrass | Cool | 10 - 15 | ½ |
| 5. Millet | Warm | 3 - 15 | ½ - ¾ |
| 6. Winter wheat | Cool | 20–35 | 1 - 2 |
| 7. Winter barley | Cool | 20–35 | 1 - 2 |
| 8. Winter rye | Cool | 20–35 | 1 - 2 |
| 9. Triticale | Cool | 25–40 | 1 - 2 |

[a] Successful seeding of annual grass resulting in adequate plant growth will usually produce enough dead-plant residue to provide protection from wind and water erosion for an additional year. This assumes that the cover is not disturbed or mowed closer than 8 inches.

Hydraulic seeding may be substituted for drilling only where slopes are steeper than 3:1 or where access limitations exist. When hydraulic seeding is used, hydraulic mulching should be applied as a separate operation, when practical, to prevent the seeds from being encapsulated in the mulch.

[b] See Table TS/PS-2 for seeding dates. Irrigation, if consistently applied, may extend the use of cool season species during the summer months.

[c] Seeding rates should be doubled if seed is broadcast, or increased by 50 percent if done using a Brillion Drill or by hydraulic seeding.





**Table TS/PS-2. Seeding Dates for Annual and Perennial Grasses**

| | Annual Grasses (Numbers in table reference species in Table TS/PS-1) | | Perennial Grasses | |
|---|---|---|---|---|
| **Seeding Dates** | **Warm** | **Cool** | **Warm** | **Cool** |
| January 1–March 15 | | | ✓ | ✓ |
| March 16–April 30 | | 1,2,3 | ✓ | ✓ |
| May 1–May 15 | | | ✓ | |
| May 16–June 30 | 5 | | | |
| July 1–July 15 | 5 | | | |
| July 16–August 31 | | | | |
| September 1–September 30 | | 6, 7, 8, 9 | | |
| October 1–December 31 | | | ✓ | ✓ |

### Mulch

Cover seeded areas with mulch or an appropriate rolled erosion control product to promote establishment of vegetation. Anchor mulch by crimping, netting or use of a non-toxic tackifier. See the USDCM Volume 2 *Revegetation* Chapter and Volume 3 Mulching BMP Fact Sheet (EC-04) for additional guidance.

## Maintenance and Removal

Monitor and observe seeded areas to identify areas of poor growth or areas that fail to germinate. Reseed and mulch these areas, as needed.

If a temporary annual seed was planted, the area should be reseeded with the desired perennial mix when there will be no further work in the area. To minimize competition between annual and perennial species, the annual mix needs time to mature and die before seeding the perennial mix. To increase success of the perennial mix, it should be seeded during the appropriate seeding dates the second year after the temporary annual mix was seeded. Alternatively, if this timeline is not feasible, the annual mix seed heads should be removed and then the area seeded with the perennial mix.

An area that has been permanently seeded should have a good stand of vegetation within one growing season if irrigated and within three growing seasons without irrigation in Colorado. Reseed portions of the site that fail to germinate or remain bare after the first growing season.

Seeded areas may require irrigation, particularly during extended dry periods. Targeted weed control may also be necessary.

Protect seeded areas from construction equipment and vehicle access.





## Description

**Photograph MU-1.** An area that was recently seeded, mulched, and crimped.

Mulching consists of evenly applying straw, hay, shredded wood mulch, rock, bark or compost to disturbed soils and securing the mulch by crimping, tackifiers, netting or other measures. Mulching helps reduce erosion by protecting bare soil from rainfall impact, increasing infiltration, and reducing runoff. Although often applied in conjunction with temporary or permanent seeding, it can also be used for temporary stabilization of areas that cannot be reseeded due to seasonal constraints.

Mulch can be applied either using standard mechanical dry application methods or using hydromulching equipment that hydraulically applies a slurry of water, wood fiber mulch, and often a tackifier.

## Appropriate Uses

Use mulch in conjunction with seeding to help protect the seedbed and stabilize the soil. Mulch can also be used as a temporary cover on low to mild slopes to help temporarily stabilize disturbed areas where growing season constraints prevent effective reseeding. Disturbed areas should be properly mulched and tacked, or seeded, mulched and tacked promptly after final grade is reached (typically within no longer than 14 days) on portions of the site not otherwise permanently stabilized.

Standard dry mulching is encouraged in most jurisdictions; however, hydromulching may not be allowed in certain jurisdictions or may not be allowed near waterways.

Do not apply mulch during windy conditions.

## Design and Installation

Prior to mulching, surface-roughen areas by rolling with a crimping or punching type roller or by track walking. Track walking should only be used where other methods are impractical because track walking with heavy equipment typically compacts the soil.

A variety of mulches can be used effectively at construction sites. Consider the following:

| Mulch | |
|---|---|
| **Functions** | |
| Erosion Control | Yes |
| Sediment Control | Moderate |
| Site/Material Management | No |





- Clean, weed-free and seed-free cereal grain straw should be applied evenly at a rate of 2 tons per acre and must be tacked or fastened by a method suitable for the condition of the site. Straw mulch must be anchored (and not merely placed) on the surface. This can be accomplished mechanically by crimping or with the aid of tackifiers or nets. Anchoring with a crimping implement is preferred, and is the recommended method for areas flatter than 3:1. Mechanical crimpers must be capable of tucking the long mulch fibers into the soil to a depth of 3 inches without cutting them. An agricultural disk, while not an ideal substitute, may work if the disk blades are dull or blunted and set vertically; however, the frame may have to be weighted to afford proper soil penetration.
- Grass hay may be used in place of straw; however, because hay is comprised of the entire plant including seed, mulching with hay may seed the site with non-native grass species which might in turn out-compete the native seed. Alternatively, native species of grass hay may be purchased, but can be difficult to find and are more expensive than straw. Purchasing and utilizing a certified weed-free straw is an easier and less costly mulching method. When using grass hay, follow the same guidelines as for straw (provided above).
- On small areas sheltered from the wind and heavy runoff, spraying a tackifier on the mulch is satisfactory for holding it in place. For steep slopes and special situations where greater control is needed, erosion control blankets anchored with stakes should be used instead of mulch.
- Hydraulic mulching consists of wood cellulose fibers mixed with water and a tackifying agent and should be applied at a rate of no less than 1,500 pounds per acre (1,425 lbs of fibers mixed with at least 75 lbs of tackifier) with a hydraulic mulcher. For steeper slopes, up to 2000 pounds per acre may be required for effective hydroseeding. Hydromulch typically requires up to 24 hours to dry; therefore, it should not be applied immediately prior to inclement weather. Application to roads, waterways and existing vegetation should be avoided.
- Erosion control mats, blankets, or nets are recommended to help stabilize steep slopes (generally 3:1 and steeper) and waterways. Depending on the product, these may be used alone or in conjunction with grass or straw mulch. Normally, use of these products will be restricted to relatively small areas. Biodegradable mats made of straw and jute, straw-coconut, coconut fiber, or excelsior can be used instead of mulch. (See the ECM/TRM BMP for more information.)
- Some tackifiers or binders may be used to anchor mulch. Check with the local jurisdiction for allowed tackifiers. Manufacturer's recommendations should be followed at all times. (See the Soil Binder BMP for more information on general types of tackifiers.)
- Rock can also be used as mulch. It provides protection of exposed soils to wind and water erosion and allows infiltration of precipitation. An aggregate base course can be spread on disturbed areas for temporary or permanent stabilization. The rock mulch layer should be thick enough to provide full coverage of exposed soil on the area it is applied.

## Maintenance and Removal

After mulching, the bare ground surface should not be more than 10 percent exposed. Reapply mulch, as needed, to cover bare areas.





## Description

**Photograph CD-1.** Rock check dams in a roadside ditch. Photo courtesy of WWE.

Check dams are temporary grade control structures placed in drainage channels to limit the erosivity of stormwater by reducing flow velocity. Check dams are typically constructed from rock, gravel bags, sand bags, or sometimes, proprietary devices. Reinforced check dams are typically constructed from rock and wire gabion. Although the primary function of check dams is to reduce the velocity of concentrated flows, a secondary benefit is sediment trapping upstream of the structure.

## Appropriate Uses

Use as a grade control for temporary drainage ditches or swales until final soil stabilization measures are established upstream and downstream. Check dams can be used on mild or moderately steep slopes. Check dams may be used under the following conditions:

- As temporary grade control facilities along waterways until final stabilization is established.
- Along permanent swales that need protection prior to installation of a non-erodible lining.
- Along temporary channels, ditches or swales that need protection where construction of a non-erodible lining is not practicable.
- Reinforced check dams should be used in areas subject to high flow velocities.

## Design and Installation

Place check dams at regularly spaced intervals along the drainage swale or ditch. Check dams heights should allow for pools to develop upstream of each check dam, extending to the downstream toe of the check dam immediately upstream.

When rock is used for the check dam, place rock mechanically or by hand. Do not dump rocks into the drainage channel. Where multiple check dams are used, the top of the lower dam should be at the same elevation as the toe of the upper dam.

When reinforced check dams are used, install erosion control fabric under and around the check dam to prevent erosion on the upstream and downstream sides. Each section of the dam should be keyed in to reduce the potential for washout or undermining. A rock apron upstream and downstream of the dam may be necessary to further control erosion.

| Check Dams | |
|---|---|
| **Functions** | |
| Erosion Control | Yes |
| Sediment Control | Moderate |
| Site/Material Management | No |





Design details with notes are provided for the following types of check dams:

- Rock Check Dams (CD-1)
- Reinforced Check Dams (CD-2)

Sediment control logs may also be used as check dams; however, silt fence is not appropriate for use as a check dam. Many jurisdictions also prohibit or discourage use of straw bales for this purpose.

## Maintenance and Removal

Replace missing rocks causing voids in the check dam. If gravel bags or sandbags are used, replace or repair torn or displaced bags.

Remove accumulated sediment, as needed to maintain BMP effectiveness, typically before the sediment depth upstream of the check dam is within ½ of the crest height. Remove accumulated sediment prior to mulching, seeding, or chemical soil stabilization. Removed sediment can be incorporated into the earthwork with approval from the Project Engineer, or disposed of at an alternate location in accordance with the standard specifications.

Check dams constructed in permanent swales should be removed when perennial grasses have become established, or immediately prior to installation of a non-erodible lining. All of the rock and accumulated sediment should be removed, and the area seeded and mulched, or otherwise stabilized.





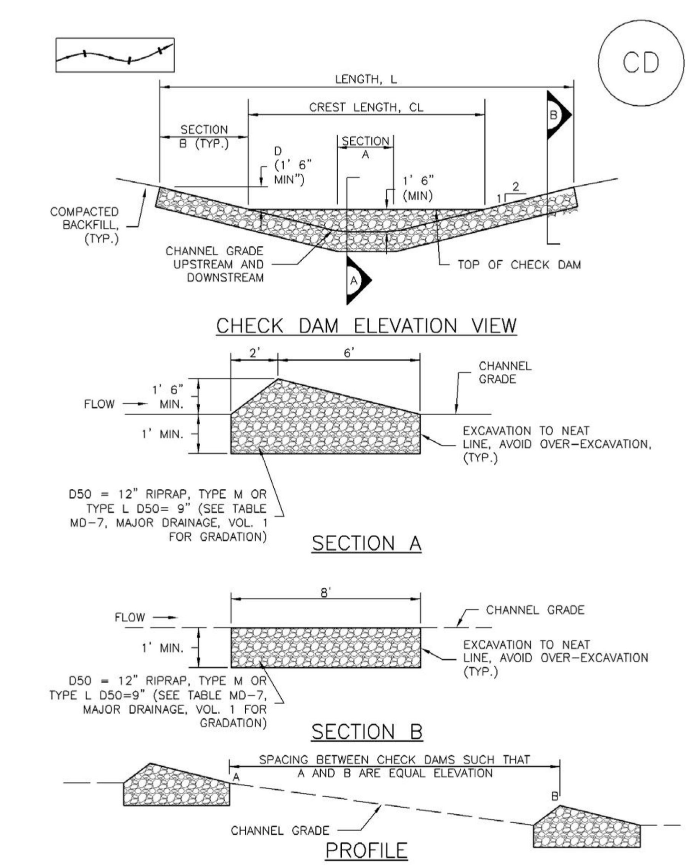


CD-1. CHECK DAM



| NO. | REVISION | BY | DATE | APPR. |
|---|---|---|---|---|

2024 KIMLEY-HORN AND ASSOCIATES, INC.
2 North Nevada Avenue Suite 900
Colorado Springs, Colorado 80903 (719) 453-0180

DESIGNED BY: KRK
DRAWN BY: AJL
CHECKED BY: KRK
DATE: 08/01/2024

OVERLOOK AT HOMESTEAD FILING NO. 1
EL PASO COUNTY, COLORADO
PRE DEVELOPMENT GESC PLAN
DETAIL SHEET (4 OF 7)

COLORADO LICENSED PROFESSIONAL ENGINEER
KEVIN REX KOFFORD
57234
9/9/2024

PROJECT NO.
196239003

SHEET
1.22

k:\cos_civil\196239003_overlook\CADD\PlanSheets\EG\EG_GEC_DT.dwg Kofford, Kevin 9/9/2024 1:12 PM

EPC 9/17/2024

CHECK DAM INSTALLATION NOTES

1. SEE PLAN VIEW FOR:
   -LOCATION OF CHECK DAMS.
   -CHECK DAM TYPE (CHECK DAM OR REINFORCED CHECK DAM).
   -LENGTH (L), CREST LENGTH (CL), AND DEPTH (D).

2. CHECK DAMS INDICATED ON INITIAL SWMP SHALL BE INSTALLED AFTER CONSTRUCTION FENCE, BUT PRIOR TO ANY UPSTREAM LAND DISTURBING ACTIVITIES.

3. RIPRAP UTILIZED FOR CHECK DAMS SHOULD BE OF APPROPRIATE SIZE FOR THE APPLICATION. TYPICAL TYPES OF RIPRAP USED FOR CHECK DAMS ARE TYPE M (D50 12") OR TYPE L (D50 9").

4. RIPRAP PAD SHALL BE TRENCHED INTO THE GROUND A MINIMUM OF 1'.

5. THE ENDS OF THE CHECK DAM SHALL BE A MINIMUM OF 1' 6" HIGHER THAN THE CENTER OF THE CHECK DAM.

CHECK DAM MAINTENANCE NOTES

1. INSPECT BMPs EACH WORKDAY, AND MAINTAIN THEM IN EFFECTIVE OPERATING CONDITION. MAINTENANCE OF BMPs SHOULD BE PROACTIVE, NOT REACTIVE. INSPECT BMPs AS SOON AS POSSIBLE (AND ALWAYS WITHIN 24 HOURS) FOLLOWING A STORM THAT CAUSES SURFACE EROSION, AND PERFORM NECESSARY MAINTENANCE.

2. FREQUENT OBSERVATIONS AND MAINTENANCE ARE NECESSARY TO MAINTAIN BMPs IN EFFECTIVE OPERATING CONDITION. INSPECTIONS AND CORRECTIVE MEASURES SHOULD BE DOCUMENTED THOROUGHLY.

3. WHERE BMPs HAVE FAILED, REPAIR OR REPLACEMENT SHOULD BE INITIATED UPON DISCOVERY OF THE FAILURE.

4. SEDIMENT ACCUMULATED UPSTREAM OF THE CHECK DAMS SHALL BE REMOVED WHEN THE SEDIMENT DEPTH IS WITHIN ½ OF THE HEIGHT OF THE CREST.

5. CHECK DAMS ARE TO REMAIN IN PLACE UNTIL THE UPSTREAM DISTURBED AREA IS STABILIZED AND APPROVED BY THE LOCAL JURISDICTION.

6. WHEN CHECK DAMS ARE REMOVED, EXCAVATIONS SHALL BE FILLED WITH SUITABLE COMPACTED BACKFILL. DISTURBED AREA SHALL BE SEEDED AND MULCHED AND COVERED WITH GEOTEXTILE OR OTHERWISE STABILIZED IN A MANNER APPROVED BY THE LOCAL JURISDICTION.

(DETAILS ADAPTED FROM DOUGLAS COUNTY, COLORADO, NOT AVAILABLE IN AUTOCAD)

NOTE: MANY JURISDICTIONS HAVE BMP DETAILS THAT VARY FROM UDFCD STANDARD DETAILS. CONSULT WITH LOCAL JURISDICTIONS AS TO WHICH DETAIL SHOULD BE USED WHEN DIFFERENCES ARE NOTED.





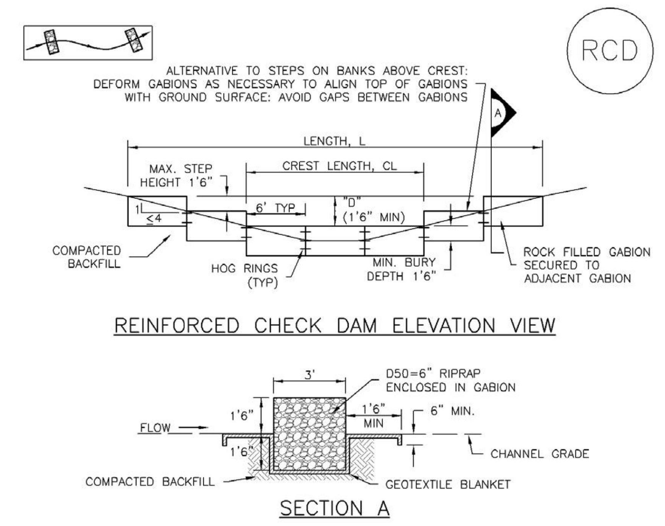


REINFORCED CHECK DAM INSTALLATION NOTES

1. SEE PLAN VIEW FOR:
   -LOCATIONS OF CHECK DAMS.
   -CHECK DAM TYPE (CHECK DAM OR REINFORCED CHECK DAM).
   -LENGTH (L), CREST LENGTH (CL), AND DEPTH (D).

2. CHECK DAMS INDICATED ON THE SWMP SHALL BE INSTALLED PRIOR TO AN UPSTREAM LAND-DISTURBING ACTIVITIES.

3. REINFORCED CHECK DAMS, GABIONS SHALL HAVE GALVANIZED TWISTED WIRE NETTING WITH A MAXIMUM OPENING DIMENSION OF 4½" AND A MINIMUM WIRE THICKNESS OF 0.10". WIRE "HOG RINGS" AT 4" SPACING OR OTHER APPROVED MEANS SHALL BE USED AT ALL GABION SEAMS AND TO SECURE THE GABION TO THE ADJACENT SECTION.

4. THE CHECK DAM SHALL BE TRENCHED INTO THE GROUND A MINIMUM OF 1' 6".

5. GEOTEXTILE BLANKET SHALL BE PLACED IN THE REINFORCED CHECK DAM TRENCH EXTENDING A MINIMUM OF 1' 6" ON BOTH THE UPSTREAM AND DOWNSTREAM SIDES OF THE REINFORCED CHECK DAM.

CD-2. REINFORCED CHECK DAM





REINFORCED CHECK DAM MAINTENANCE NOTES

1. INSPECT BMPs EACH WORKDAY, AND MAINTAIN THEM IN EFFECTIVE OPERATING CONDITION. MAINTENANCE OF BMPs SHOULD BE PROACTIVE, NOT REACTIVE. INSPECT BMPs AS SOON AS POSSIBLE (AND ALWAYS WITHIN 24 HOURS) FOLLOWING A STORM THAT CAUSES SURFACE EROSION, AND PERFORM NECESSARY MAINTENANCE.

2. FREQUENT OBSERVATIONS AND MAINTENANCE ARE NECESSARY TO MAINTAIN BMPs IN EFFECTIVE OPERATING CONDITION. INSPECTIONS AND CORRECTIVE MEASURES SHOULD BE DOCUMENTED THOROUGHLY.

3. WHERE BMPs HAVE FAILED, REPAIR OR REPLACEMENT SHOULD BE INITIATED UPON DISCOVERY OF THE FAILURE.

4. SEDIMENT ACCUMULATED UPSTREAM OF REINFORCED CHECK DAMS SHALL BE REMOVED AS NEEDED TO MAINTAIN THE EFFECTIVENESS OF BMP, TYPICALLY WHEN THE UPSTREAM SEDIMENT DEPTH IS WITHIN ½ THE HEIGHT OF THE CREST.

5. REPAIR OR REPLACE REINFORCED CHECK DAMS WHEN THERE ARE SIGNS OF DAMAGE SUCH AS HOLES IN THE GABION OR UNDERCUTTING.

6. REINFORCED CHECK DAMS ARE TO REMAIN IN PLACE UNTIL THE UPSTREAM DISTURBED AREA IS STABILIZED AND APPROVED BY THE LOCAL JURISDICTION.

7. WHEN REINFORCED CHECK DAMS ARE REMOVED, ALL DISTURBED AREAS SHALL BE COVERED WITH TOPSOIL, SEEDED AND MULCHED, AND COVERED WITH A GEOTEXTILE BLANKET, OR OTHERWISE STABILIZED AS APPROVED BY LOCAL JURISDICTION.

(DETAIL ADAPTED FROM DOUGLAS COUNTY, COLORADO AND CITY OF AURORA, COLORADO, NOT AVAILABLE IN AUTOCAD)

NOTE: MANY JURISDICTIONS HAVE BMP DETAILS THAT VARY FROM UDFCD STANDARD DETAILS. CONSULT WITH LOCAL JURISDICTIONS AS TO WHICH DETAIL SHOULD BE USED WHEN DIFFERENCES ARE NOTED.





## Description

A silt fence is a woven geotextile fabric attached to wooden posts and trenched into the ground. It is designed as a sediment barrier to intercept sheet flow runoff from disturbed areas.

**Photograph SF-1.** Silt fence creates a sediment barrier, forcing sheet flow runoff to evaporate or infiltrate.

## Appropriate Uses

A silt fence can be used where runoff is conveyed from a disturbed area as sheet flow. Silt fence is not designed to receive concentrated flow or to be used as a filter fabric. Typical uses include:

- Down slope of a disturbed area to accept sheet flow.
- Along the perimeter of a receiving water such as a stream, pond or wetland.
- At the perimeter of a construction site.

## Design and Installation

Silt fence should be installed along the contour of slopes so that it intercepts sheet flow. The maximum recommended tributary drainage area per 100 lineal feet of silt fence, installed along the contour, is approximately 0.25 acres with a disturbed slope length of up to 150 feet and a tributary slope gradient no steeper than 3:1. Longer and steeper slopes require additional measures. This recommendation only applies to silt fence installed along the contour. Silt fence installed for other uses, such as perimeter control, should be installed in a way that will not produce concentrated flows. For example, a "J-hook" installation may be appropriate to force runoff to pond and evaporate or infiltrate in multiple areas rather than concentrate and cause erosive conditions parallel to the silt fence.

See Detail SF-1 for proper silt fence installation, which involves proper trenching, staking, securing the fabric to the stakes, and backfilling the silt fence. Properly installed silt fence should not be easily pulled out by hand and there should be no gaps between the ground and the fabric.

Silt fence must meet the minimum allowable strength requirements, depth of installation requirement, and other specifications in the design details. Improper installation of silt fence is a common reason for silt fence failure; however, when properly installed and used for the appropriate purposes, it can be highly effective.

| Silt Fence | |
|---|---|
| **Functions** | |
| Erosion Control | No |
| Sediment Control | Yes |
| Site/Material Management | No |





## Maintenance and Removal

Inspection of silt fence includes observing the material for tears or holes and checking for slumping fence and undercut areas bypassing flows. Repair of silt fence typically involves replacing the damaged section with a new section. Sediment accumulated behind silt fence should be removed, as needed to maintain BMP effectiveness, typically before it reaches a depth of 6 inches.

Silt fence may be removed when the upstream area has reached final stabilization.

**Photograph SF-2.** When silt fence is not installed along the contour, a "J-hook" installation may be appropriate to ensure that the BMP does not create concentrated flow parallel to the silt fence. Photo courtesy of Tom Gore.





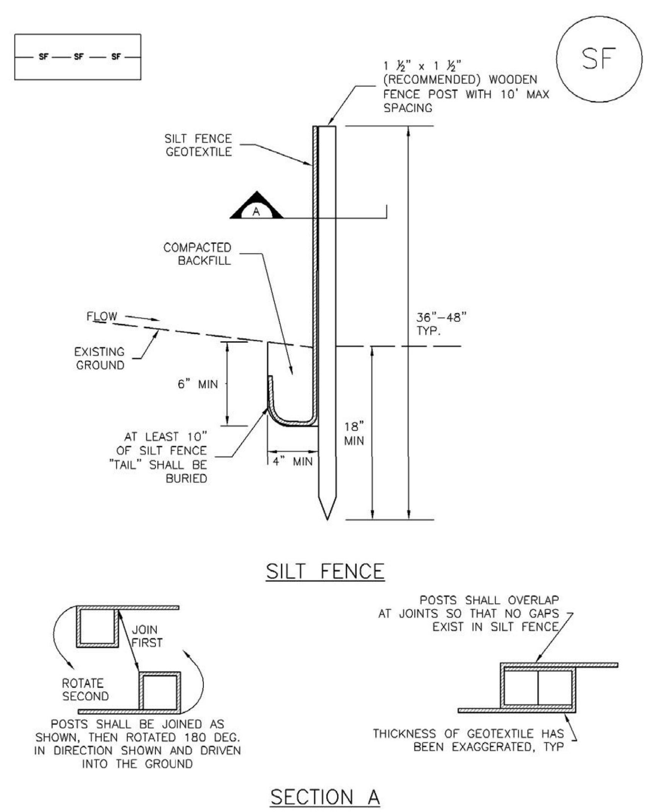


SF-1. SILT FENCE





SILT FENCE INSTALLATION NOTES

1. SILT FENCE MUST BE PLACED AWAY FROM THE TOE OF THE SLOPE TO ALLOW FOR WATER PONDING. SILT FENCE AT THE TOE OF A SLOPE SHOULD BE INSTALLED IN A FLAT LOCATION AT LEAST SEVERAL FEET (2-5 FT) FROM THE TOE OF THE SLOPE TO ALLOW ROOM FOR PONDING AND DEPOSITION.

2. A UNIFORM 6" X 4" ANCHOR TRENCH SHALL BE EXCAVATED USING TRENCHER OR SILT FENCE INSTALLATION DEVICE. NO ROAD GRADERS, BACKHOES, OR SIMILAR EQUIPMENT SHALL BE USED.

3. COMPACT ANCHOR TRENCH BY HAND WITH A "JUMPING JACK" OR BY WHEEL ROLLING. COMPACTION SHALL BE SUCH THAT SILT FENCE RESISTS BEING PULLED OUT OF ANCHOR TRENCH BY HAND.

4. SILT FENCE SHALL BE PULLED TIGHT AS IT IS ANCHORED TO THE STAKES. THERE SHOULD BE NO NOTICEABLE SAG BETWEEN STAKES AFTER IT HAS BEEN ANCHORED TO THE STAKES.

5. SILT FENCE FABRIC SHALL BE ANCHORED TO THE STAKES USING 1" HEAVY DUTY STAPLES OR NAILS WITH 1" HEADS. STAPLES AND NAILS SHOULD BE PLACED 3" ALONG THE FABRIC DOWN THE STAKE.

6. AT THE END OF A RUN OF SILT FENCE ALONG A CONTOUR, THE SILT FENCE SHOULD BE TURNED PERPENDICULAR TO THE CONTOUR TO CREATE A "J-HOOK." THE "J-HOOK" EXTENDING PERPENDICULAR TO THE CONTOUR SHOULD BE OF SUFFICIENT LENGTH TO KEEP RUNOFF FROM FLOWING AROUND THE END OF THE SILT FENCE (TYPICALLY 10' – 20').

7. SILT FENCE SHALL BE INSTALLED PRIOR TO ANY LAND DISTURBING ACTIVITIES.

SILT FENCE MAINTENANCE NOTES

1. INSPECT BMPs EACH WORKDAY, AND MAINTAIN THEM IN EFFECTIVE OPERATING CONDITION. MAINTENANCE OF BMPs SHOULD BE PROACTIVE, NOT REACTIVE. INSPECT BMPs AS SOON AS POSSIBLE (AND ALWAYS WITHIN 24 HOURS) FOLLOWING A STORM THAT CAUSES SURFACE EROSION, AND PERFORM NECESSARY MAINTENANCE.

2. FREQUENT OBSERVATIONS AND MAINTENANCE ARE NECESSARY TO MAINTAIN BMPs IN EFFECTIVE OPERATING CONDITION. INSPECTIONS AND CORRECTIVE MEASURES SHOULD BE DOCUMENTED THOROUGHLY.

3. WHERE BMPs HAVE FAILED, REPAIR OR REPLACEMENT SHOULD BE INITIATED UPON DISCOVERY OF THE FAILURE.

4. SEDIMENT ACCUMULATED UPSTREAM OF THE SILT FENCE SHALL BE REMOVED AS NEEDED TO MAINTAIN THE FUNCTIONALITY OF THE BMP, TYPICALLY WHEN DEPTH OF ACCUMULATED SEDIMENTS IS APPROXIMATELY 6".

5. REPAIR OR REPLACE SILT FENCE WHEN THERE ARE SIGNS OF WEAR, SUCH AS SAGGING, TEARING, OR COLLAPSE.

6. SILT FENCE IS TO REMAIN IN PLACE UNTIL THE UPSTREAM DISTURBED AREA IS STABILIZED AND APPROVED BY THE LOCAL JURISDICTION, OR IS REPLACED BY AN EQUIVALENT PERIMETER SEDIMENT CONTROL BMP.

7. WHEN SILT FENCE IS REMOVED, ALL DISTURBED AREAS SHALL BE COVERED WITH TOPSOIL, SEEDED AND MULCHED OR OTHERWISE STABILIZED AS APPROVED BY LOCAL JURISDICTION.

(DETAIL ADAPTED FROM TOWN OF PARKER, COLORADO AND CITY OF AURORA, NOT AVAILABLE IN AUTOCAD)

NOTE: MANY JURISDICTIONS HAVE BMP DETAILS THAT VARY FROM UDFCD STANDARD DETAILS. CONSULT WITH LOCAL JURISDICTIONS AS TO WHICH DETAIL SHOULD BE USED WHEN DIFFERENCES ARE NOTED.





## Description

A sediment control log is a linear roll made of natural materials such as straw, coconut fiber, or compost. The most common type of sediment control log has straw filling and is often referred to as a "straw wattle." All sediment control logs are used as a sediment barrier to intercept sheet flow runoff from disturbed areas.

**Photographs SCL-1 and SCL-2.** Sediment control logs used as 1) a perimeter control around a soil stockpile; and, 2) as a "J-hook" perimeter control at the corner of a construction site.

## Appropriate Uses

Sediment control logs can be used in the following applications to trap sediment:

- As perimeter control for stockpiles and the site.
- As part of inlet protection designs.
- As check dams in small drainage ditches. (Sediment control logs are not intended for use in channels with high flow velocities.)
- On disturbed slopes to shorten flow lengths (as an erosion control).
- As part of multi-layered perimeter control along a receiving water such as a stream, pond or wetland.

Sediment control logs work well in combination with other layers of erosion and sediment controls.

## Design and Installation

Sediment control logs should be installed along the contour to avoid concentrating flows. The maximum allowable tributary drainage area per 100 lineal feet of sediment control log, installed along the contour, is approximately 0.25 acres with a disturbed slope length of up to 150 feet and a tributary slope gradient no steeper than 3:1. Longer and steeper slopes require additional measures. This recommendation only applies to sediment control logs installed along the contour. When installed for other uses, such as perimeter control, it should be installed in a way that will not produce concentrated flows. For example, a "J-hook" installation may be appropriate to force runoff to pond and evaporate or infiltrate in multiple areas rather than concentrate and cause erosive conditions parallel to the BMP.

| Sediment Control Log | |
|---|---|
| **Functions** | |
| Erosion Control | Moderate |
| Sediment Control | Yes |
| Site/Material Management | No |





Although sediment control logs initially allow runoff to flow through the BMP, they can quickly become a barrier and should be installed as if they are impermeable.

Design details and notes for sediment control logs are provided in the following details. Sediment logs must be properly installed per the detail to prevent undercutting, bypassing and displacement. When installed on slopes, sediment control logs should be installed along the contours (i.e., perpendicular to flow).

Improper installation can lead to poor performance. Be sure that sediment control logs are properly trenched (if lighter than 8 lb/foot), anchored and tightly jointed.

## Maintenance and Removal

Be aware that sediment control logs will eventually degrade. Remove accumulated sediment before the depth is one-half the height of the sediment log and repair damage to the sediment log, typically by replacing the damaged section.

Once the upstream area is stabilized, remove and properly dispose of the logs. Areas disturbed beneath the logs may need to be seeded and mulched. Sediment control logs that are biodegradable may occasionally be left in place (e.g., when logs are used in conjunction with erosion control blankets as permanent slope breaks). However, removal of sediment control logs after final stabilization is typically appropriate when used in perimeter control, inlet protection and check dam applications. Compost from compost sediment control logs may be spread over the area and seeded as long as this does not cover newly established vegetation.





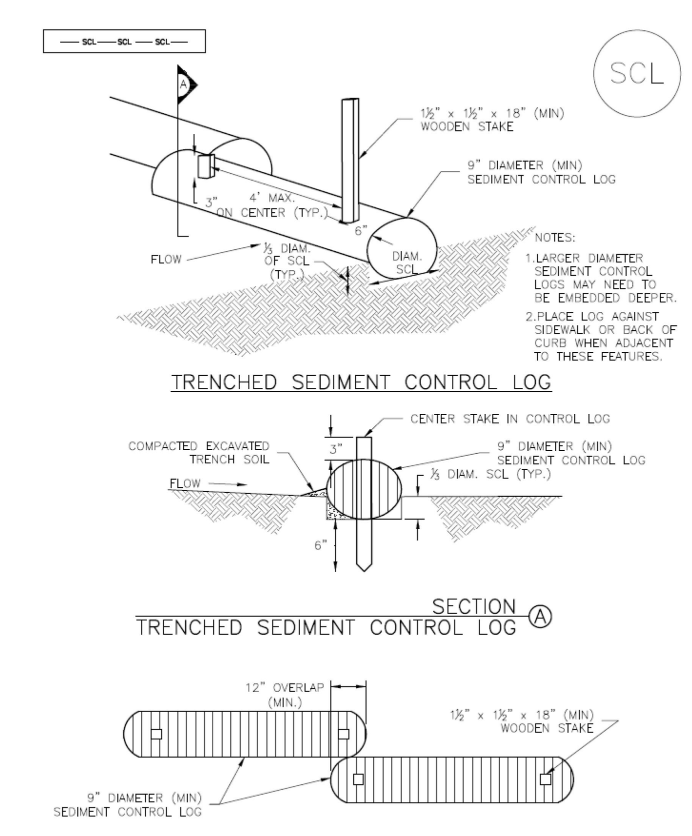


SCL-1. TRENCHED SEDIMENT CONTROL LOG



| NO. | REVISION | BY | DATE | APPR. |
|---|---|---|---|---|

Kimley-Horn

2024 KIMLEY-HORN AND ASSOCIATES, INC.
2 North Nevada Avenue Suite 900
Colorado Springs, Colorado 80903 (719) 453-0180

DESIGNED BY: KRK
DRAWN BY: AJL
CHECKED BY: KRK
DATE: 08/01/2024

OVERLOOK AT HOMESTEAD FILING NO. 1
EL PASO COUNTY, COLORADO
PRE DEVELOPMENT GESC PLAN
DETAIL SHEET (5 OF 7)

COLORADO LICENSED KEVIN REX KOFFORD 57234 9/9/2024 PROFESSIONAL ENGINEER

PROJECT NO. 196239003

SHEET 1.23

k:\cos_civil\196239003_overlook\CADD\PlanSheets\EG\EG_GEC_DT.dwg Kofford, Kevin 9/9/2024 1:12 PM

EPC 9/17/2024

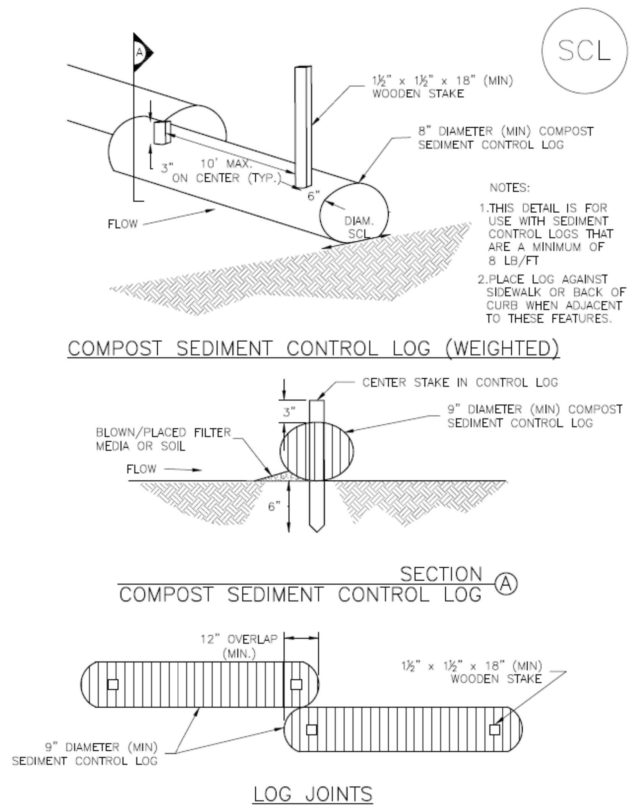


SCL-2. COMPOST SEDIMENT CONTROL LOG (WEIGHTED)





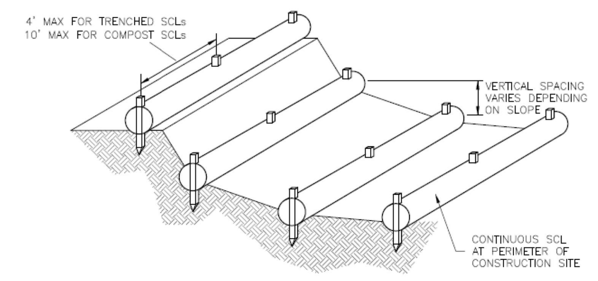


SCL-3. SEDIMENT CONTROL LOGS TO CONTROL SLOPE LENGTH





SEDIMENT CONTROL LOG INSTALLATION NOTES

1. SEE PLAN VIEW FOR LOCATION AND LENGTH OF SEDIMENT CONTROL LOGS.

2. SEDIMENT CONTROL LOGS THAT ACT AS A PERIMETER CONTROL SHALL BE INSTALLED PRIOR TO ANY UPGRADIENT LAND-DISTURBING ACTIVITIES.

3. SEDIMENT CONTROL LOGS SHALL CONSIST OF STRAW, COMPOST, EXCELSIOR OR COCONUT FIBER, AND SHALL BE FREE OF ANY NOXIOUS WEED SEEDS OR DEFECTS INCLUDING RIPS, HOLES AND OBVIOUS WEAR.

4. SEDIMENT CONTROL LOGS MAY BE USED AS SMALL CHECK DAMS IN DITCHES AND SWALES. HOWEVER, THEY SHOULD NOT BE USED IN PERENNIAL STREAMS.

5. IT IS RECOMMENDED THAT SEDIMENT CONTROL LOGS BE TRENCHED INTO THE GROUND TO A DEPTH OF APPROXIMATELY ⅓ OF THE DIAMETER OF THE LOG. IF TRENCHING TO THIS DEPTH IS NOT FEASIBLE AND/OR DESIRABLE (SHORT TERM INSTALLATION WITH DESIRE NOT TO DAMAGE LANDSCAPE) A LESSER TRENCHING DEPTH MAY BE ACCEPTABLE WITH MORE ROBUST STAKING. COMPOST LOGS THAT ARE 8 LB/FT DO NOT NEED TO BE TRENCHED.

6. THE UPHILL SIDE OF THE SEDIMENT CONTROL LOG SHALL BE BACKFILLED WITH SOIL OR FILTER MATERIAL THAT IS FREE OF ROCKS AND DEBRIS. THE SOIL SHALL BE TIGHTLY COMPACTED INTO THE SHAPE OF A RIGHT TRIANGLE USING A SHOVEL OR WEIGHTED LAWN ROLLER OR BLOWN IN PLACE.

7. FOLLOW MANUFACTURERS' GUIDANCE FOR STAKING. IF MANUFACTURERS' INSTRUCTIONS DO NOT SPECIFY SPACING, STAKES SHALL BE PLACED ON 4' CENTERS AND EMBEDDED A MINIMUM OF 6" INTO THE GROUND. 3" OF THE STAKE SHALL PROTRUDE FROM THE TOP OF THE LOG. STAKES THAT ARE BROKEN PRIOR TO INSTALLATION SHALL BE REPLACED. COMPOST LOGS SHOULD BE STAKED 10' ON CENTER.

SEDIMENT CONTROL LOG MAINTENANCE NOTES

1. INSPECT BMPs EACH WORKDAY, AND MAINTAIN THEM IN EFFECTIVE OPERATING CONDITION. MAINTENANCE OF BMPs SHOULD BE PROACTIVE, NOT REACTIVE. INSPECT BMPs AS SOON AS POSSIBLE (AND ALWAYS WITHIN 24 HOURS) FOLLOWING A STORM THAT CAUSES SURFACE EROSION, AND PERFORM NECESSARY MAINTENANCE.

2. FREQUENT OBSERVATIONS AND MAINTENANCE ARE NECESSARY TO MAINTAIN BMPs IN EFFECTIVE OPERATING CONDITION. INSPECTIONS AND CORRECTIVE MEASURES SHOULD BE DOCUMENTED THOROUGHLY.

3. WHERE BMPs HAVE FAILED, REPAIR OR REPLACEMENT SHOULD BE INITIATED UPON DISCOVERY OF THE FAILURE.

4. SEDIMENT ACCUMULATED UPSTREAM OF SEDIMENT CONTROL LOG SHALL BE REMOVED AS NEEDED TO MAINTAIN FUNCTIONALITY OF THE BMP, TYPICALLY WHEN DEPTH OF ACCUMULATED SEDIMENTS IS APPROXIMATELY ½ OF THE HEIGHT OF THE SEDIMENT CONTROL LOG.

5. SEDIMENT CONTROL LOG SHALL BE REMOVED AT THE END OF CONSTRUCTION.COMPOST FROM COMPOST LOGS MAY BE LEFT IN PLACE AS LONG AS BAGS ARE REMOVED AND THE AREA SEEDED. IF DISTURBED AREAS EXIST AFTER REMOVAL, THEY SHALL BE COVERED WITH TOP SOIL, SEEDED AND MULCHED OR OTHERWISE STABILIZED IN A MANNER APPROVED BY THE LOCAL JURISDICTION.

(DETAILS ADAPTED FROM TOWN OF PARKER, COLORADO, JEFFERSON COUNTY, COLORADO, DOUGLAS COUNTY, COLORADO, AND CITY OF AURORA, COLORADO, NOT AVAILABLE IN AUTOCAD)

NOTE: MANY JURISDICTIONS HAVE BMP DETAILS THAT VARY FROM UDFCD STANDARD DETAILS. CONSULT WITH LOCAL JURISDICTIONS AS TO WHICH DETAIL SHOULD BE USED WHEN DIFFERENCES ARE NOTED.





## Description

Inlet protection consists of permeable barriers installed around an inlet to filter runoff and remove sediment prior to entering a storm drain inlet. Inlet protection can be constructed from rock socks, sediment control logs, silt fence, block and rock socks, or other materials approved by the local jurisdiction. Area inlets can also be protected by over-excavating around the inlet to form a sediment trap.

**Photograph IP-1.** Inlet protection for a curb opening inlet.

## Appropriate Uses

Install protection at storm sewer inlets that are operable during construction. Consider the potential for tracked-out sediment or temporary stockpile areas to contribute sediment to inlets when determining which inlets must be protected. This may include inlets in the general proximity of the construction area, not limited to downgradient inlets. Inlet protection is not a stand-alone BMP and should be used in conjunction with other upgradient BMPs.

## Design and Installation

To function effectively, inlet protection measures must be installed to ensure that flows do not bypass the inlet protection and enter the storm drain without treatment. However, designs must also enable the inlet to function without completely blocking flows into the inlet in a manner that causes localized flooding. When selecting the type of inlet protection, consider factors such as type of inlet (e.g., curb or area, sump or on-grade conditions), traffic, anticipated flows, ability to secure the BMP properly, safety and other site-specific conditions. For example, block and rock socks will be better suited to a curb and gutter along a roadway, as opposed to silt fence or sediment control logs, which cannot be properly secured in a curb and gutter setting, but are effective area inlet protection measures.

Several inlet protection designs are provided in the Design Details. Additionally, a variety of proprietary products are available for inlet protection that may be approved for use by local governments. If proprietary products are used, design details and installation procedures from the manufacturer must be followed. Regardless of the type of inlet protection selected, inlet protection is most effective when combined with other BMPs such as curb socks and check dams. Inlet protection is often the last barrier before runoff enters the storm sewer or receiving water.

Design details with notes are provided for these forms of inlet protection:

| Inlet Protection (various forms) | |
|---|---|
| **Functions** | |
| Erosion Control | No |
| Sediment Control | Yes |
| Site/Material Management | No |

IP-1. Block and Rock Sock Inlet Protection for Sump or On-grade Inlets

IP-2. Curb (Rock) Socks Upstream of Inlet Protection, On-grade Inlets





IP-3. Rock Sock Inlet Protection for Sump/Area Inlet

IP-4. Silt Fence Inlet Protection for Sump/Area Inlet

IP-5. Over-excavation Inlet Protection

IP-6. Straw Bale Inlet Protection for Sump/Area Inlet

CIP-1. Culvert Inlet Protection

Propriety inlet protection devices should be installed in accordance with manufacturer specifications.

More information is provided below on selecting inlet protection for sump and on-grade locations.

### Inlets Located in a Sump

When applying inlet protection in sump conditions, it is important that the inlet continue to function during larger runoff events. For curb inlets, the maximum height of the protective barrier should be lower than the top of the curb opening to allow overflow into the inlet during larger storms without excessive localized flooding. If the inlet protection height is greater than the curb elevation, particularly if the filter becomes clogged with sediment, runoff will not enter the inlet and may bypass it, possibly causing localized flooding, public safety issues, and downstream erosion and damage from bypassed flows.

Area inlets located in a sump setting can be protected through the use of silt fence, concrete block and rock socks (on paved surfaces), sediment control logs/straw wattles embedded in the adjacent soil and stacked around the area inlet (on pervious surfaces), over-excavation around the inlet, and proprietary products providing equivalent functions.

### Inlets Located on a Slope

For curb and gutter inlets on paved sloping streets, block and rock sock inlet protection is recommended in conjunction with curb socks in the gutter leading to the inlet. For inlets located along unpaved roads, also see the Check Dam Fact Sheet.

## Maintenance and Removal

Inspect inlet protection frequently. Inspection and maintenance guidance includes:

- Inspect for tears that can result in sediment directly entering the inlet, as well as result in the contents of the BMP (e.g., gravel) washing into the inlet.
- Check for improper installation resulting in untreated flows bypassing the BMP and directly entering the inlet or bypassing to an unprotected downstream inlet. For example, silt fence that has not been properly trenched around the inlet can result in flows under the silt fence and directly into the inlet.
- Look for displaced BMPs that are no longer protecting the inlet. Displacement may occur following larger storm events that wash away or reposition the inlet protection. Traffic or equipment may also crush or displace the BMP.
- Monitor sediment accumulation upgradient of the inlet protection.





- Remove sediment accumulation from the area upstream of the inlet protection, as needed to maintain BMP effectiveness, typically when it reaches no more than half the storage capacity of the inlet protection. For silt fence, remove sediment when it accumulates to a depth of no more than 6 inches. Remove sediment accumulation from the area upstream of the inlet protection as needed to maintain the functionality of the BMP.
- Propriety inlet protection devices should be inspected and maintained in accordance with manufacturer specifications. If proprietary inlet insert devices are used, sediment should be removed in a timely manner to prevent devices from breaking and spilling sediment into the storm drain.

Inlet protection must be removed and properly disposed of when the drainage area for the inlet has reached final stabilization.





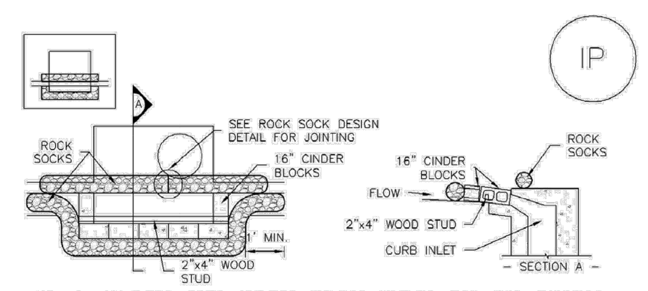


IP-1. BLOCK AND ROCK SOCK SUMP OR ON GRADE INLET PROTECTION

BLOCK AND CURB SOCK INLET PROTECTION INSTALLATION NOTES

1. SEE ROCK SOCK DESIGN DETAIL FOR INSTALLATION REQUIREMENTS.

2. CONCRETE "CINDER" BLOCKS SHALL BE LAID ON THEIR SIDES AROUND THE INLET IN A SINGLE ROW, ABUTTING ONE ANOTHER WITH THE OPEN END FACING AWAY FROM THE CURB.

3. GRAVEL BAGS SHALL BE PLACED AROUND CONCRETE BLOCKS, CLOSELY ABUTTING ONE ANOTHER AND JOINTED TOGETHER IN ACCORDANCE WITH ROCK SOCK DESIGN DETAIL.

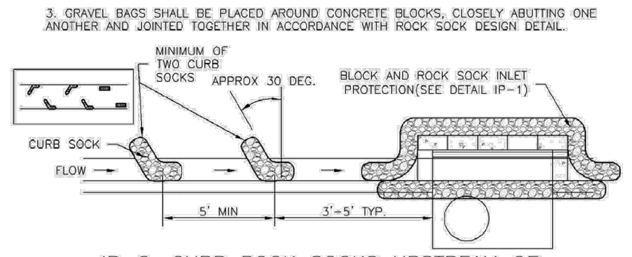


IP-2. CURB ROCK SOCKS UPSTREAM OF INLET PROTECTION

CURB ROCK SOCK INLET PROTECTION INSTALLATION NOTES

1. SEE ROCK SOCK DESIGN DETAIL INSTALLATION REQUIREMENTS.

2. PLACEMENT OF THE SOCK SHALL BE APPROXIMATELY 30 DEGREES FROM PERPENDICULAR IN THE OPPOSITE DIRECTION OF FLOW.

3. SOCKS ARE TO BE FLUSH WITH THE CURB AND SPACED A MINIMUM OF 5 FEET APART.

4. AT LEAST TWO CURB SOCKS IN SERIES ARE REQUIRED UPSTREAM OF ON-GRADE INLETS.





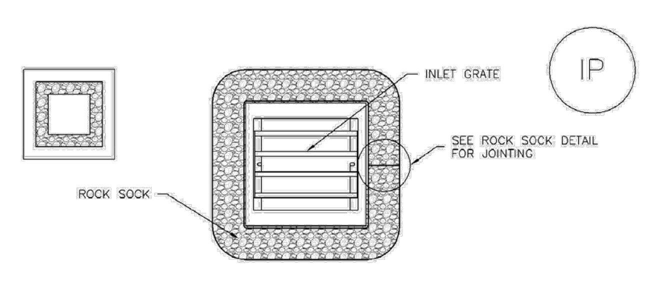


IP-3. ROCK SOCK SUMP/AREA INLET PROTECTION

ROCK SOCK SUMP/AREA INLET PROTECTION INSTALLATION NOTES

1. SEE ROCK SOCK DESIGN DETAIL FOR INSTALLATION REQUIREMENTS.

2. STRAW WATTLES/SEDIMENT CONTROL LOGS MAY BE USED IN PLACE OF ROCK SOCKS FOR INLETS IN PERVIOUS AREAS. INSTALL PER SEDIMENT CONTROL LOG DETAIL.

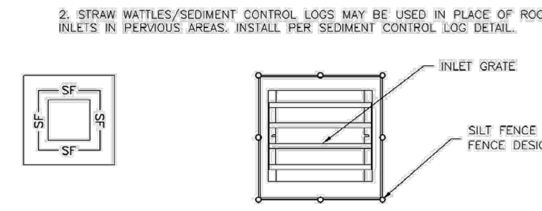


IP-4. SILT FENCE FOR SUMP INLET PROTECTION

SILT FENCE INLET PROTECTION INSTALLATION NOTES

1. SEE SILT FENCE DESIGN DETAIL FOR INSTALLATION REQUIREMENTS.

2. POSTS SHALL BE PLACED AT EACH CORNER OF THE INLET AND AROUND THE EDGES AT A MAXIMUM SPACING OF 3 FEET.

3. STRAW WATTLES/SEDIMENT CONTROL LOGS MAY BE USED IN PLACE OF SILT FENCE FOR INLETS IN PERVIOUS AREAS. INSTALL PER SEDIMENT CONTROL LOG DETAIL.





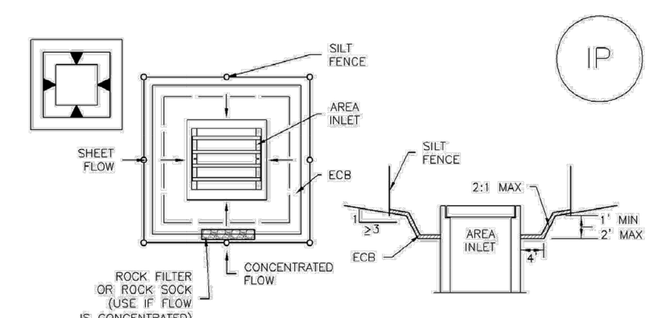


IP-5. OVEREXCAVATION INLET PROTECTION

OVEREXCAVATION INLET PROTECTION INSTALLATION NOTES

1. THIS FORM OF INLET PROTECTION IS PRIMARILY APPLICABLE FOR SITES THAT HAVE NOT YET REACHED FINAL GRADE AND SHOULD BE USED ONLY FOR INLETS WITH A RELATIVELY SMALL CONTRIBUTING DRAINAGE AREA.

2. WHEN USING FOR CONCENTRATED FLOWS, SHAPE BASIN IN 2:1 RATIO WITH LENGTH ORIENTED TOWARDS DIRECTION OF FLOW.

3. SEDIMENT MUST BE PERIODICALLY REMOVED FROM THE OVEREXCAVATED AREA.

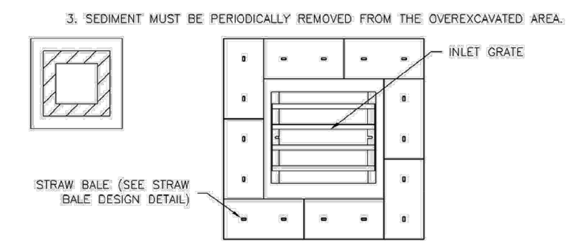


IP-6. STRAW BALE FOR SUMP INLET PROTECTION

STRAW BALE BARRIER INLET PROTECTION INSTALLATION NOTES

1. SEE STRAW BALE DESIGN DETAIL FOR INSTALLATION REQUIREMENTS.

2. BALES SHALL BE PLACED IN A SINGLE ROW AROUND THE INLET WITH ENDS OF BALES TIGHTLY ABUTTING ONE ANOTHER.





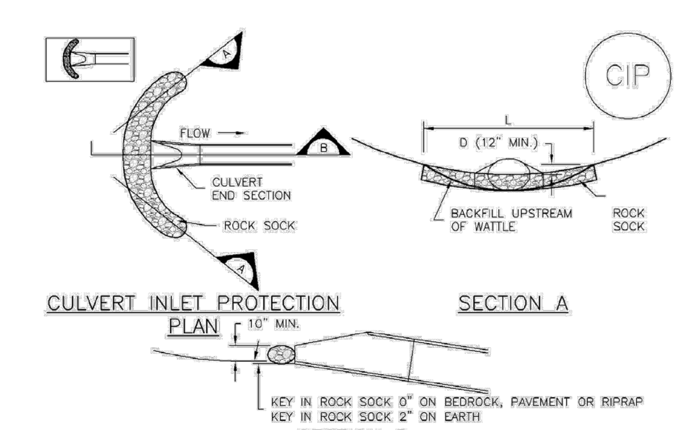


CIP-1. CULVERT INLET PROTECTION

CULVERT INLET PROTECTION INSTALLATION NOTES

1. SEE PLAN VIEW FOR
 -LOCATION OF CULVERT INLET PROTECTION.

2. SEE ROCK SOCK DESIGN DETAIL FOR ROCK GRADATION REQUIREMENTS AND JOINTING DETAIL.

CULVERT INLET PROTECTION MAINTENANCE NOTES

1. INSPECT BMPs EACH WORKDAY, AND MAINTAIN THEM IN EFFECTIVE OPERATING CONDITION. MAINTENANCE OF BMPs SHOULD BE PROACTIVE, NOT REACTIVE. INSPECT BMPs AS SOON AS POSSIBLE (AND ALWAYS WITHIN 24 HOURS) FOLLOWING A STORM THAT CAUSES SURFACE EROSION, AND PERFORM NECESSARY MAINTENANCE.

2. FREQUENT OBSERVATIONS AND MAINTENANCE ARE NECESSARY TO MAINTAIN BMPs IN EFFECTIVE OPERATING CONDITION. INSPECTIONS AND CORRECTIVE MEASURES SHOULD BE DOCUMENTED THOROUGHLY.

3. WHERE BMPs HAVE FAILED, REPAIR OR REPLACEMENT SHOULD BE INITIATED UPON DISCOVERY OF THE FAILURE.

4. SEDIMENT ACCUMULATED UPSTREAM OF THE CULVERT SHALL BE REMOVED WHEN THE SEDIMENT DEPTH IS ½ THE HEIGHT OF THE ROCK SOCK.

5. CULVERT INLET PROTECTION SHALL REMAIN IN PLACE UNTIL THE UPSTREAM DISTURBED AREA IS PERMANENTLY STABILIZED AND APPROVED BY THE LOCAL JURISDICTION.

(DETAILS ADAPTED FROM AURORA, COLORADO, NOT AVAILABLE IN AUTOCAD)

NOTE: MANY JURISDICTIONS HAVE BMP DETAILS THAT VARY FROM UDFCD STANDARD DETAILS. CONSULT WITH LOCAL JURISDICTIONS AS TO WHICH DETAIL SHOULD BE USED WHEN DIFFERENCES ARE NOTED.



| NO. | REVISION | BY | DATE | APPR. |
|---|---|---|---|---|
| | | | | |

Kimley-Horn
2024 KIMLEY-HORN AND ASSOCIATES, INC.
2 North Nevada Avenue Suite 900
Colorado Springs, Colorado 80903 (719) 453-0180

DESIGNED BY: KRK
DRAWN BY: AJL
CHECKED BY: KRK
DATE: 08/01/2024

OVERLOOK AT HOMESTEAD FILING NO. 1
EL PASO COUNTY, COLORADO
PRE DEVELOPMENT GESC PLAN
DETAIL SHEET (6 OF 7)

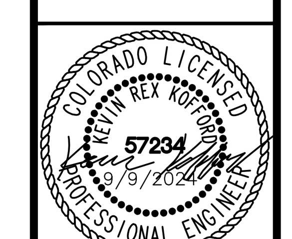


PROJECT NO.
196239003

SHEET
1.24

k:\cos_civil\196239003_overlook\CADD\PlanSheets\EG\EG_GEC_DT.dwg Kofford, Kevin 9/9/2024 1:12 PM

EPC 9/17/2024

GENERAL INLET PROTECTION INSTALLATION NOTES

1. SEE PLAN VIEW FOR:
 –LOCATION OF INLET PROTECTION.
 –TYPE OF INLET PROTECTION (IP.1, IP.2, IP.3, IP.4, IP.5, IP.6)

2. INLET PROTECTION SHALL BE INSTALLED PROMPTLY AFTER INLET CONSTRUCTION OR PAVING IS COMPLETE (TYPICALLY WITHIN 48 HOURS). IF A RAINFALL/RUNOFF EVENT IS FORECAST, INSTALL INLET PROTECTION PRIOR TO ONSET OF EVENT.

3. MANY JURISDICTIONS HAVE BMP DETAILS THAT VARY FROM UDFCD STANDARD DETAILS. CONSULT WITH LOCAL JURISDICTIONS AS TO WHICH DETAIL SHOULD BE USED WHEN DIFFERENCES ARE NOTED.

INLET PROTECTION MAINTENANCE NOTES

1. INSPECT BMPs EACH WORKDAY, AND MAINTAIN THEM IN EFFECTIVE OPERATING CONDITION. MAINTENANCE OF BMPs SHOULD BE PROACTIVE, NOT REACTIVE. INSPECT BMPs AS SOON AS POSSIBLE (AND ALWAYS WITHIN 24 HOURS) FOLLOWING A STORM THAT CAUSES SURFACE EROSION, AND PERFORM NECESSARY MAINTENANCE.

2. FREQUENT OBSERVATIONS AND MAINTENANCE ARE NECESSARY TO MAINTAIN BMPs IN EFFECTIVE OPERATING CONDITION. INSPECTIONS AND CORRECTIVE MEASURES SHOULD BE DOCUMENTED THOROUGHLY.

3. WHERE BMPs HAVE FAILED, REPAIR OR REPLACEMENT SHOULD BE INITIATED UPON DISCOVERY OF THE FAILURE.

4. SEDIMENT ACCUMULATED UPSTREAM OF INLET PROTECTION SHALL BE REMOVED AS NECESSARY TO MAINTAIN BMP EFFECTIVENESS, TYPICALLY WHEN STORAGE VOLUME REACHES 50% OF CAPACITY, A DEPTH OF 6" WHEN SILT FENCE IS USED, OR ¼ OF THE HEIGHT FOR STRAW BALES.

5. INLET PROTECTION IS TO REMAIN IN PLACE UNTIL THE UPSTREAM DISTURBED AREA IS PERMANENTLY STABILIZED, UNLESS THE LOCAL JURISDICTION APPROVES EARLIER REMOVAL OF INLET PROTECTION IN STREETS.

6. WHEN INLET PROTECTION AT AREA INLETS IS REMOVED, THE DISTURBED AREA SHALL BE COVERED WITH TOP SOIL, SEEDED AND MULCHED, OR OTHERWISE STABILIZED IN A MANNER APPROVED BY THE LOCAL JURISDICTION.

(DETAIL ADAPTED FROM TOWN OF PARKER, COLORADO AND CITY OF AURORA, COLORADO, NOT AVAILABLE IN AUTOCAD)

NOTE: MANY JURISDICTIONS HAVE BMP DETAILS THAT VARY FROM UDFCD STANDARD DETAILS. CONSULT WITH LOCAL JURISDICTIONS AS TO WHICH DETAIL SHOULD BE USED WHEN DIFFERENCES ARE NOTED.

NOTE: THE DETAILS INCLUDED WITH THIS FACT SHEET SHOW COMMONLY USED, CONVENTIONAL METHODS OF INLET PROTECTION IN THE DENVER METROPOLITAN AREA. THERE ARE MANY PROPRIETARY INLET PROTECTION METHODS ON THE MARKET. UDFCD NEITHER ENDORSES NOR DISCOURAGES USE OF PROPRIETARY INLET PROTECTION; HOWEVER, IN THE EVENT PROPRIETARY METHODS ARE USED, THE APPROPRIATE DETAIL FROM THE MANUFACTURER MUST BE INCLUDED IN THE SWMP AND THE BMP MUST BE INSTALLED AND MAINTAINED AS SHOWN IN THE MANUFACTURER'S DETAILS.

NOTE: SOME MUNICIPALITIES DISCOURAGE OR PROHIBIT THE USE OF STRAW BALES FOR INLET PROTECTION. CHECK WITH LOCAL JURISDICTION TO DETERMINE IF STRAW BALE INLET PROTECTION IS ACCEPTABLE.





### Description

A sediment basin is a temporary pond built on a construction site to capture eroded or disturbed soil transported in storm runoff prior to discharge from the site. Sediment basins are designed to capture site runoff and slowly release it to allow time for settling of sediment prior to discharge. Sediment basins are often constructed in locations that will later be modified to serve as post-construction stormwater basins.

**Photograph SB-1.** Sediment basin at the toe of a slope. Photo courtesy of WWE.

### Appropriate Uses

Most large construction sites (typically greater than 2 acres) will require one or more sediment basins for effective management of construction site runoff. On linear construction projects, sediment basins may be impractical; instead, sediment traps or other combinations of BMPs may be more appropriate.

Sediment basins should not be used as stand-alone sediment controls. Erosion and other sediment controls should also be implemented upstream.

When feasible, the sediment basin should be installed in the same location where a permanent post-construction detention pond will be located.

### Design and Installation

The design procedure for a sediment basin includes these steps:

- **Basin Storage Volume**: Provide a storage volume of at least 3,600 cubic feet per acre of drainage area. To the extent practical, undisturbed and/or off-site areas should be diverted around sediment basins to prevent "clean" runoff from mixing with runoff from disturbed areas. For undisturbed areas (both on-site and off-site) that cannot be diverted around the sediment basin, provide a minimum of 500 $ft^3$/acre of storage for undeveloped (but stable) off-site areas in addition to the 3,600 $ft^3$/acre for disturbed areas. For stable, developed areas that cannot be diverted around the sediment basin, storage volume requirements are summarized in Table SB-1.

- **Basin Geometry:** Design basin with a minimum length-to-width ratio of 2:1 (L:W). If this cannot be achieved because of site space constraints, baffling may be required to extend the effective distance between the inflow point(s) and the outlet to minimize short-circuiting.

- **Dam Embankment**: It is recommended that embankment slopes be 4:1 (H:V) or flatter and no steeper than 3:1 (H:V) in any location.

| Sediment Basins | |
|---|---|
| **Functions** | |
| Erosion Control | No |
| Sediment Control | Yes |
| Site/Material Management | No |





- **Inflow Structure**: For concentrated flow entering the basin, provide energy dissipation at the point of inflow.

**Table SB-1. Additional Volume Requirements for Undisturbed and Developed Tributary Areas Draining through Sediment Basins**

| Imperviousness (%) | Additional Storage Volume ($ft^3$) Per Acre of Tributary Area |
|---|---|
| Undeveloped | 500 |
| 10 | 800 |
| 20 | 1230 |
| 30 | 1600 |
| 40 | 2030 |
| 50 | 2470 |
| 60 | 2980 |
| 70 | 3560 |
| 80 | 4360 |
| 90 | 5300 |
| 100 | 6460 |

- **Outlet Works**: The outlet pipe shall extend through the embankment at a minimum slope of 0.5 percent. Outlet works can be designed using one of the following approaches:
  - **Riser Pipe (Simplified Detail):** Detail SB-1 provides a simplified design for basins treating no more than 15 acres.
  - **Orifice Plate or Riser Pipe**: Follow the design criteria for Full Spectrum Detention outlets in the EDB Fact Sheet provided in Chapter 4 of this manual for sizing of outlet perforations with an emptying time of approximately 72 hours. In lieu of the trash rack, pack uniformly sized 1½ - to 2-inch gravel in front of the plate or surrounding the riser pipe. This gravel will need to be cleaned out frequently during the construction period as sediment accumulates within it. The gravel pack will need to be removed and disposed of following construction to reclaim the basin for use as a permanent detention facility. If the basin will be used as a permanent extended detention basin for the site, a trash rack will need to be installed once contributing drainage areas have been stabilized and the gravel pack and accumulated sediment have been removed.
  - **Floating Skimmer**: If a floating skimmer is used, install it using manufacturer's recommendations. Illustration SB-1 provides an illustration of a Faircloth Skimmer Floating Outlet™, one of the more commonly used floating skimmer outlets. A skimmer should be designed to release the design volume in no less than 48 hours. The use of a floating skimmer outlet can increase the sediment capture efficiency of a basin significantly. A floating outlet continually decants cleanest water off the surface of the pond and releases cleaner water than would discharge from a perforated riser pipe or plate.





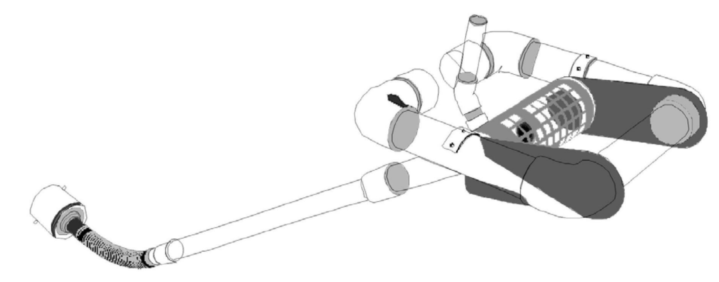

**Illustration SB-1.** Outlet structure for a temporary sediment basin - Faircloth Skimmer Floating Outlet. Illustration courtesy of J. W. Faircloth & Sons, Inc., FairclothSkimmer.com.

- **Outlet Protection and Spillway:** Consider all flow paths for runoff leaving the basin, including protection at the typical point of discharge as well as overtopping.
  - **Outlet Protection:** Outlet protection should be provided where the velocity of flow will exceed the maximum permissible velocity of the material of the waterway into which discharge occurs. This may require the use of a riprap apron at the outlet location and/or other measures to keep the waterway from eroding.
  - **Emergency Spillway:** Provide a stabilized emergency overflow spillway for rainstorms that exceed the capacity of the sediment basin volume and its outlet. Protect basin embankments from erosion and overtopping. If the sediment basin will be converted to a permanent detention basin, design and construct the emergency spillway(s) as required for the permanent facility. If the sediment basin will not become a permanent detention basin, it may be possible to substitute a heavy polyvinyl membrane or properly bedded rock cover to line the spillway and downstream embankment, depending on the height, slope, and width of the embankments.





### Maintenance and Removal

Maintenance activities include the following:

- Dredge sediment from the basin, as needed to maintain BMP effectiveness, typically when the design storage volume is no more than one-third filled with sediment.
- Inspect the sediment basin embankments for stability and seepage.
- Inspect the inlet and outlet of the basin, repair damage, and remove debris. Remove, clean and replace the gravel around the outlet on a regular basis to remove the accumulated sediment within it and keep the outlet functioning.
- Be aware that removal of a sediment basin may require dewatering and associated permit requirements.
- Do not remove a sediment basin until the upstream area has been stabilized with vegetation.

Final disposition of the sediment basin depends on whether the basin will be converted to a permanent post-construction stormwater basin or whether the basin area will be returned to grade. For basins being converted to permanent detention basins, remove accumulated sediment and reconfigure the basin and outlet to meet the requirements of the final design for the detention facility. If the sediment basin is not to be used as a permanent detention facility, fill the excavated area with soil and stabilize with vegetation.





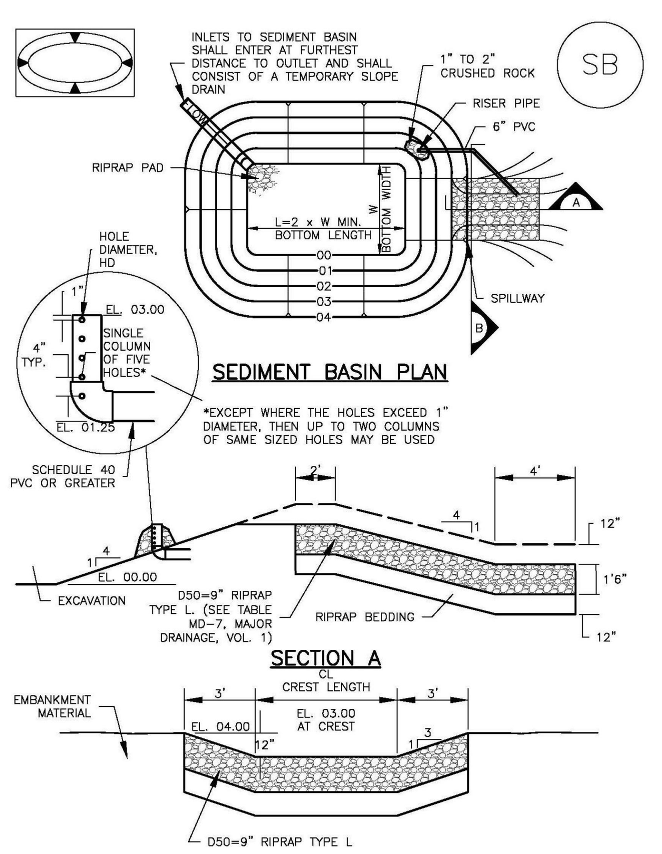






| TABLE SB-1. SIZING INFORMATION FOR STANDARD SEDIMENT BASIN | | | |
|---|---|---|---|
| Upstream Drainage Area (rounded to nearest acre), (ac) | Basin Bottom Width (W), (ft) | Spillway Crest Length (CL), (ft) | Hole Diameter (HD), (in) |
| 1 | 12 ½ | 2 | 9/32 |
| 2 | 21 | 3 | 13/16 |
| 3 | 28 | 5 | ½ |
| 4 | 33 ½ | 6 | 9/16 |
| 5 | 38 ½ | 8 | 21/32 |
| 6 | 43 | 9 | 21/32 |
| 7 | 47 ¼ | 11 | 25/32 |
| 8 | 51 | 12 | 27/32 |
| 9 | 55 | 13 | 7/8 |
| 10 | 58 ¼ | 15 | 15/16 |
| 11 | 61 | 16 | 31/32 |
| 12 | 64 | 18 | 1 |
| 13 | 67 ½ | 19 | 1 1/16 |
| 14 | 70 ½ | 21 | 1 1/8 |
| 15 | 73 ¼ | 22 | 1 3/16 |

SEDIMENT BASIN INSTALLATION NOTES

1. SEE PLAN VIEW FOR:
 –LOCATION OF SEDIMENT BASIN.
 –TYPE OF BASIN (STANDARD BASIN OR NONSTANDARD BASIN).
 –FOR STANDARD BASIN, BOTTOM WIDTH W, CREST LENGTH CL, AND HOLE DIAMETER, HD.
 –FOR NONSTANDARD BASIN, SEE CONSTRUCTION DRAWINGS FOR DESIGN OF BASIN INCLUDING RISER HEIGHT H, NUMBER OF COLUMNS N, HOLE DIAMETER HD AND PIPE DIAMETER D.

2. FOR STANDARD BASIN, BOTTOM DIMENSION MAY BE MODIFIED AS LONG AS BOTTOM AREA IS NOT REDUCED.

3. SEDIMENT BASINS SHALL BE INSTALLED PRIOR TO ANY OTHER LAND–DISTURBING ACTIVITY THAT RELIES ON ON BASINS AS AS A STORMWATER CONTROL.

4. EMBANKMENT MATERIAL SHALL CONSIST OF SOIL FREE OF DEBRIS, ORGANIC MATERIAL, AND ROCKS OR CONCRETE GREATER THAN 3 INCHES AND SHALL HAVE A MINIMUM OF 15 PERCENT BY WEIGHT PASSING THE NO. 200 SIEVE.

5. EMBANKMENT MATERIAL SHALL BE COMPACTED TO AT LEAST 95 PERCENT OF MAXIMUM DENSITY IN ACCORDANCE WITH ASTM D698.

6. PIPE SCH 40 OR GREATER SHALL BE USED.

7. THE DETAILS SHOWN ON THESE SHEETS PERTAIN TO STANDARD SEDIMENT BASIN(S) FOR DRAINAGE AREAS LESS THAN 15 ACRES. SEE CONSTRUCTION DRAWINGS FOR EMBANKMENT, STORAGE VOLUME, SPILLWAY, OUTLET, AND OUTLET PROTECTION DETAILS FOR ANY SEDIMENT BASIN(S) THAT HAVE BEEN INDIVIDUALLY DESIGNED FOR DRAINAGE AREAS LARGER THAN 15 ACRES.





SEDIMENT BASIN MAINTENANCE NOTES

1. INSPECT BMPs EACH WORKDAY, AND MAINTAIN THEM IN EFFECTIVE OPERATING CONDITION. MAINTENANCE OF BMPs SHOULD BE PROACTIVE, NOT REACTIVE. INSPECT BMPs AS SOON AS POSSIBLE (AND ALWAYS WITHIN 24 HOURS) FOLLOWING A STORM THAT CAUSES SURFACE EROSION, AND PERFORM NECESSARY MAINTENANCE.

2. FREQUENT OBSERVATIONS AND MAINTENANCE ARE NECESSARY TO MAINTAIN BMPs IN EFFECTIVE OPERATING CONDITION. INSPECTIONS AND CORRECTIVE MEASURES SHOULD BE DOCUMENTED THOROUGHLY.

3. WHERE BMPs HAVE FAILED, REPAIR OR REPLACEMENT SHOULD BE INITIATED UPON DISCOVERY OF THE FAILURE.

4. SEDIMENT ACCUMULATED IN BASIN SHALL BE REMOVED AS NEEDED TO MAINTAIN BMP EFFECTIVENESS, TYPICALLY WHEN SEDIMENT DEPTH REACHES ONE FOOT (I.E., TWO FEET BELOW THE SPILLWAY CREST).

5. SEDIMENT BASINS ARE TO REMAIN IN PLACE UNTIL THE UPSTREAM DISTURBED AREA IS STABILIZED AND GRASS COVER IS ACCEPTED BY THE LOCAL JURISDICTION.

6. WHEN SEDIMENT BASINS ARE REMOVED, ALL DISTURBED AREAS SHALL BE COVERED WITH TOPSOIL, SEEDED AND MULCHED OR OTHERWISE STABILIZED AS APPROVED BY LOCAL JURISDICTION.

(DETAILS ADAPTED FROM DOUGLAS COUNTY, COLORADO)

NOTE: MANY JURISDICTIONS HAVE BMP DETAILS THAT VARY FROM UDFCD STANDARD DETAILS. CONSULT WITH LOCAL JURISDICTIONS AS TO WHICH DETAIL SHOULD BE USED WHEN DIFFERENCES ARE NOTED.



| NO. | REVISION | BY | DATE | APPR. |
|---|---|---|---|---|

Kimley-Horn
2024 KIMLEY–HORN AND ASSOCIATES, INC.
2 North Nevada Avenue Suite 900
Colorado Springs, Colorado 80903 (719) 453–0180

DESIGNED BY: KRK
DRAWN BY: AJL
CHECKED BY: KRK
DATE: 08/01/2024

OVERLOOK AT HOMESTEAD FILING NO. 1
EL PASO COUNTY, COLORADO
PRE DEVELOPMENT GESC PLAN
DETAIL SHEET (7 OF 7)

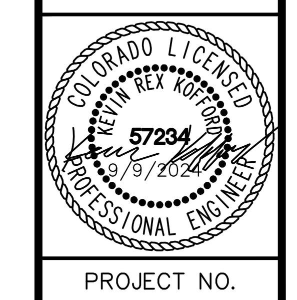


PROJECT NO.
196239003

SHEET
1.25

k:\cos_civil\196239003_overlook\CADD\PlanSheets\EG\EG_GEC_DT.dwg Kofford, Kevin 9/9/2024 1:12 PM

EPC 9/17/2024

# APPENDIX B
# CDPHE STOMWATER PERMIT

STATE OF COLORADO

**COLORADO DEPARTMENT OF PUBLIC HEALTH AND ENVIRONMENT**
**Water Quality Control Division**

CDPS GENERAL PERMIT

STORMWATER DISCHARGES ASSOCIATED WITH

**CONSTRUCTION ACTIVITY**

AUTHORIZATION TO DISCHARGE UNDER THE

COLORADO DISCHARGE PERMIT SYSTEM (CDPS)

In compliance with the provisions of the Colorado Water Quality Control Act, (25-8-101 et seq., CRS, 1973 as amended) and the Federal Water Pollution Control Act, as amended (33 U.S.C. 1251 et seq.; the "Act"), this permit authorizes the discharge of stormwater associated with construction activities (and specific allowable non-stormwater discharges in accordance with Part I.A.1. of the permit) certified under this permit, from those locations specified throughout the State of Colorado to specified waters of the State.

Such discharges shall be in accordance with the conditions of this permit. This permit specifically authorizes the facility listed on the certification to discharge in accordance with permit requirements and conditions set forth in Parts I and II hereof. All discharges authorized herein shall be consistent with the terms and conditions of this permit.

This permit becomes effective on April 1, 2019, and shall expire at midnight March 31, 2024.

Issued and signed this 1st day of November 2018.

COLORADO DEPARTMENT OF PUBLIC HEALTH AND ENVIRONMENT

Ellen Howard Kutzer, Permits Section Manager
Water Quality Control Division

**Permit History**
**Originally signed and issued October 31, 2018; effective April 1, 2019.**

Table of Contents


Part I ..... 1

A. COVERAGE UNDER THIS PERMIT ..... 1

1. Authorized Discharges ..... 1

2. Limitations on Coverage ..... 1

3. Permit Certification and Submittal Procedures ..... 2

B. EFFLUENT LIMITATIONS ..... 6

1. Requirements for Control Measures Used to Meet Effluent Limitations ..... 6

2. Discharges to an Impaired Waterbody ..... 9

3. General Requirements ..... 10

C. STORMWATER MANAGEMENT PLAN (SWMP) REQUIREMENTS ..... 11

1. SWMP General Requirements ..... 11

2. SWMP Content ..... 11

3. SWMP Review and Revisions ..... 13

4. SWMP Availability ..... 14

D. SITE INSPECTIONS ..... 14

1. Person Responsible for Conducting Inspections ..... 14

2. Inspection Frequency ..... 14

3. Inspection Frequency for Discharges to Outstanding Waters ..... 15

4. Reduced Inspection Frequency ..... 15

5. Inspection Scope ..... 16

E. DEFINITIONS ..... 17

F. MONITORING ..... 20

G. Oil and Gas Construction ..... 21

Part II: Standard Permit Conditions ..... 22

A. DUTY TO COMPLY ..... 22

B. DUTY TO REAPPLY ..... 22

C. NEED TO HALT OR REDUCE ACTIVITY NOT A DEFENSE ..... 22

D. DUTY TO MITIGATE ..... 22

E. PROPER OPERATION AND MAINTENANCE ..... 22

F. PERMIT ACTIONS ..... 22

G. PROPERTY RIGHTS ..... 22

H. DUTY TO PROVIDE INFORMATION ..... 23

I. INSPECTION AND ENTRY ..... 23

J. MONITORING AND RECORDS ..... 23

K. SIGNATORY REQUIREMENTS ..... 24

1. Authorization to Sign: ..... 24
2. Electronic Signatures ..... 25
3. Change in Authorization to Sign ..... 25
L. REPORTING REQUIREMENTS ..... 25
1. Planned Changes ..... 25
2. Anticipated Non-Compliance ..... 25
3. Transfer of Ownership or Control ..... 25
4. Monitoring reports ..... 26
5. Compliance Schedules ..... 26
6. Twenty-four hour reporting ..... 26
7. Other non-compliance ..... 27
8. Other information ..... 27
M. BYPASS ..... 27
1. Bypass not exceeding limitations ..... 27
2. Notice of bypass ..... 27
3. Prohibition of Bypass ..... 27
N. UPSET ..... 28
1. Effect of an upset ..... 28
2. Conditions necessary for demonstration of an Upset ..... 28
3. Burden of Proof ..... 28
O. RETENTION OF RECORDS ..... 28
1. Post-Expiration or Termination Retention ..... 28
2. On-site Retention ..... 29
P. REOPENER CLAUSE ..... 29
1. Procedures for modification or revocation ..... 29
2. Water quality protection ..... 29
Q. SEVERABILITY ..... 29
R. NOTIFICATION REQUIREMENTS ..... 29
1. Notification to Parties ..... 29
S. RESPONSIBILITIES ..... 30
1. Reduction, Loss, or Failure of Treatment Facility ..... 30
T. Oil and Hazardous Substance Liability ..... 30
U. Emergency Powers ..... 30
V. Confidentiality ..... 30
W. Fees ..... 30

X. Duration of Permit ..... 30
Y. Section 307 Toxics ..... 30

Part I
Note: At the first mention of terminology that has a specific connotation for the purposes of this permit, the terminology is electronically linked to the definitions section of the permit in Part I.E.

## A. COVERAGE UNDER THIS PERMIT

1. Authorized Discharges

   This general permit authorizes permittee(s) to discharge the following to state waters: stormwater associated with construction activity and specified non-stormwater associated with construction activity. The following types of stormwater and non-stormwater discharges are authorized under this permit:

   a. Allowable Stormwater Discharges

      i. Stormwater discharges associated with construction activity.

      ii. Stormwater discharges associated with producing earthen materials, such as soils, sand, and gravel dedicated to providing material to a single contiguous site, or within ¼ mile of a construction site (i.e. borrow or fill areas)

      iii. Stormwater discharges associated with dedicated asphalt, concrete batch plants and masonry mixing stations (Coverage under this permit is not required if alternative coverage has been obtained.)

   b. Allowable Non-Stormwater Discharges

      The following non-stormwater discharges are allowable under this permit if the discharges are identified in the stormwater management plan in accordance with Part I.C. and if they have appropriate control measures in accordance with Part I.B.1.

      i. Discharges from uncontaminated springs that do not originate from an area of land disturbance.

      ii. Discharges to the ground of concrete washout water associated with the washing of concrete tools and concrete mixer chutes. Discharges of concrete washout water must not leave the site as surface runoff or reach receiving waters as defined by this permit.

      iii. Discharges of landscape irrigation return flow.

   c. Emergency Fire Fighting

      Discharges resulting from emergency firefighting activities are authorized by this permit.

2. Limitations on Coverage

   Discharges not authorized by this permit include, but are not limited to, the discharges and activities listed below. Permittees may seek individual or alternate general permit coverage for the discharges, as appropriate and available.

   a. Discharges of Non-Stormwater

Discharges of non-stormwater, except the authorized non-stormwater discharges listed in Part I.A.1.b., are not eligible for coverage under this permit.

b. Discharges Currently Covered by another Individual or General Permit

c. Discharges Currently Covered by a Water Quality Control Division (division) Low Risk Guidance Document

3. Permit Certification and Submittal Procedures

a. Duty to apply
The following activities shall apply for coverage under this permit:

i. Construction sites that will disturb one acre or more; or

ii. Construction sites that are part of a common plan of development or sale; or

iii. Stormwater discharges that are designated by the division as needing a stormwater permit because the discharge:

(a) Contributes to a violation of a water quality standard; or

(b) is a significant contributor of pollutants to state waters.

b. Application Requirements
To obtain authorization to discharge under this permit, applicants applying for coverage following the effective date of the renewal permit shall meet the following requirements:

i. Owners and operators submitting an application for permit coverage will be co-permittees subject to the same benefits, duties, and obligations under this permit.

ii. Signature requirements: Both the owner and operator (permittee) of the construction site, as defined in Part I.E., must agree to the terms and conditions of the permit and submit a completed application that includes the signature of both the owner and the operator. In cases where the duties of the owner and operator are managed by the owner, both application signatures may be completed by the owner. Both the owner and operator are responsible for ensuring compliance with all terms and conditions of the permit, including implementation of the stormwater management plan.

iii. Applicants must use the paper form provided by the division or the electronic form provided on the division's web-based application platform when applying for coverage under this permit.

iv. The applicant(s) must develop a stormwater management plan (SWMP) in accordance with the requirements of Part I.C. The applicant(s) must also certify that the SWMP is complete, or will be complete, prior to commencement of any construction activity.

v. The applicant(s) must submit a complete, accurate, and signed permit application electronically, by mail or hand delivery to the division at least 10 days prior to the commencement of construction activity except that construction activities that are in response to a public emergency related site shall apply for coverage no later than 14 days after the commencement of construction activities. The provisions of this part in no way remove a violation of the Colorado Water Quality Control Act if a point source discharge occurs prior to the issuance of a CDPS permit.

vi. The application must be signed in accordance with the requirements of Part IA. Applications submitted by mail or hand delivered should be directed to:

Colorado Department of Public Health and Environment
Water Quality Control Division
Permits Section, WQCD-PS-B2
4300 Cherry Creek Drive South
Denver, CO 80246

vii. The applicant(s) must receive written notification that the division granted permit coverage prior to conducting construction activities except for construction activities that are in response to a public emergency related site

c. Division Review of Permit Application

Within 10 days of receipt of the application, and following review of the application, the division may:

i. Issue a certification of coverage;

ii. request additional information necessary to evaluate the discharge;

iii. delay the authorization to discharge pending further review;

iv. notify the applicant that additional terms and conditions are necessary; or

v. deny the authorization to discharge under this general permit.

d. Alternative Permit Coverage

i. Division Required Alternate Permit Coverage:
The Division may require an applicant or permittee to apply for an individual permit or an alternative general permit if it determines the discharge does not fall under the scope of this general permit. In this case, the Division will notify the applicant or permittee that an individual permit application is required.

ii. Permittee Request for alternate permit coverage:
A permittee authorized to discharge stormwater under this permit may request to be excluded from coverage under this general permit by applying for an individual permit. In this case, the permittee must submit an individual application, with reasons supporting the request, to the Division at least 180 days prior to any discharge. When an individual permit is issued, the permittee's authorization to discharge under this permit is terminated on the effective date of the individual permit.

e. Submittal Signature Requirements

Documents required for submittal to the division in accordance with this permit, including applications for permit coverage and other documents as requested by the division, must include signatures by both the owner and the operator, except for instances where the duties of the owner and operator are managed by the owner.

Signatures on all documents submitted to the division as required by this permit must meet the Standard Signatory Requirements in Part II.K. of this permit in accordance with 40 C.F.R. 122.41(k).

i. Signature Certification
Any person(s) signing documents required for submittal to the Division must make the following certification:

"I certify under penalty of law that this document and all attachments were prepared under my direction or supervision in accordance with a system designed to assure that qualified personnel properly gather and evaluate the information submitted. Based on my inquiry of the person or persons who manage the system, or those persons directly responsible for gathering the information, the information submitted is, to the best of my knowledge and belief, true, accurate, and complete. I am aware that there are significant penalties for submitting false information, including the possibility of fine and imprisonment for knowing violations."

f. Compliance Document Signature Requirements
Documents which are required for compliance with the permit, but for which submittal to the division is not required unless specifically requested by the division, must be signed by the individual(s) designated as the Qualified Stormwater Manager, as defined in Part I.E.

i. Any person(s) signing inspection documents required for compliance with the permit must make the following statement:

"I verify that, to the best of my knowledge and belief, all corrective action and maintenance items identified during the inspection are complete, and the site is currently in compliance with the permit."

g. Field Wide Permit Coverage for Oil and Gas Construction
At the discretion of the division, a single permit certification may be issued to a single oil and gas permittee to cover construction activity related discharges from an oil and gas field at multiple locations that are not necessarily contiguous.

h. Permit Coverage without Application
Qualifying Local Program: When a small construction site is within the jurisdiction of a qualifying local program, the owner and operator of the construction activity are authorized to discharge stormwater associated with small construction activity under this general permit without the submittal of an application to the division. Sites covered by a qualifying local program are exempt from the following sections of this general permit:

Part I.A.3.a.; Part I.A.3.b.; Part I.A.3.c.; Part I.A.3.d.; Part I.A.3.g.; Part I.A.3.i.; Part I.A.3.j.; Part I.A.3.k.

Sites covered by a qualifying local program are subject to the following requirements:

i. Local Agency Authority: This permit does not pre-empt or supersede the authority of local agencies to prohibit, restrict, or control discharges of stormwater to storm drain systems or other water courses within their jurisdiction.

ii. Permit Coverage Termination: When a site under a Qualifying Local Program is finally stabilized, coverage under this permit is automatically terminated.

iii. Compliance with Qualifying Local Program: Qualifying Local Program requirements that are equivalent to the requirements of this permit are incorporated by reference. Permittees authorized to discharge under this permit, must comply with the equivalent requirements of the Qualifying Local Program that has jurisdiction over the site as a condition of this permit.

iv. Compliance with Remaining Permit Conditions. Requirements of this permit that are in addition to or more stringent than the requirements of the Qualifying Local Program apply in addition to the requirements of the Qualifying Local Program.

v. Written Authorization of Coverage: The division or local municipality may require any permittee within the jurisdiction of a Qualifying Local Program covered under this permit to apply for, and obtain written authorization of coverage under this permit. The permittee must be notified in writing that an application for written authorization of coverage is required.

i. Permittee Initiated Permit Actions

Permittee initiated permit actions, including but not limited to modifications, contact changes, transfers, reassignments, and terminations, shall be conducted following division guidance and using appropriate division-provided forms.

j. Sale of Residence to Homeowner

**Residential construction sites only**: The permittee may remove residential lots from permit coverage once the lot meets the following criteria:

i. the residential lot has been sold to the homeowner(s) for private residential use;

ii. a certificate of occupancy, or equivalent, is maintained on-site and is available during division inspections;

iii. the lot is less than one acre of disturbance;

iv. all construction activity conducted on the lot by the permittee is complete;

v. the permittee is not responsible for final stabilization of the lot; and

vi. the SWMP was modified to indicate the lot is no longer part of the construction activity.

If the residential lot meets the criteria listed above then activities occurring on the lot are no longer considered to be construction activities with a duty to apply and maintain permit coverage. Therefore, the permittee is not required to meet the final stabilization requirements and may terminate permit coverage for the lot.

k. Permit Expiration and Continuation of Permit Coverage

Authorization to discharge under this general permit shall expire at midnight on March 31, 2024. While Regulation 61.4 requires a permittee to submit an application for continuing permit coverage 180 days before the permit expires, the division is requiring that permittees desiring continued coverage under this general permit must reapply at least 90 days in advance of this permit expiration. The Division will determine if the permittee may continue to discharge stormwater under the terms of the general permit. An individual permit may be required for any facility not reauthorized to discharge under the reissued general permit.

If this permit is not reissued or replaced prior to the expiration date, it will be administratively continued and remain in force and effect. For permittees that have applied for continued permit coverage, discharges authorized under this permit prior to the expiration date will automatically remain covered by this permit until the earliest of:

i. An authorization to discharge under a reissued permit, or a replacement of this permit, following the timely and appropriate submittal of a complete application requesting authorization to discharge under the new permit and compliance with the requirements of the new permit; or

ii. The issuance and effect of a termination issued by the Division; or

iii. The issuance or denial of an individual permit for the facility's discharges; or

iv. A formal permit decision by the Division not to reissue this general permit, at which time the Division will identify a reasonable time period for covered dischargers to seek coverage under an alternative general permit or an individual permit. Coverage under this permit will cease when coverage under another permit is granted/authorized; or

v. The Division has informed the permittee that discharges previously authorized under this permit are no longer covered under this permit.

## B. EFFLUENT LIMITATIONS

1. Requirements for Control Measures Used to Meet Effluent Limitations

The permittee must implement control measures to minimize the discharge of pollutants from all potential pollutant sources at the site. Control measures must be installed prior to commencement of activities that may contribute pollutants to stormwater discharges. Control measures must be selected, designed, installed and maintained in accordance with good engineering, hydrologic and pollution control practices. Control measures implemented at the site must be designed to prevent pollution or degradation of state waters.

a. Stormwater Pollution Prevention

The permittee must implement structural and/or nonstructural control measures that effectively minimize erosion, sediment transport, and the release of other pollutants related to construction activity.

i. Control Measures for Erosion and Sediment Control

Control measures for erosion and sediment control may include, but are not limited to, wattles/sediment control logs, silt fences, earthen dikes, drainage swales, sediment traps, subsurface drains, pipe slope drains, inlet protection, outlet protection, gabions, sediment basins, temporary vegetation, permanent vegetation, mulching, geotextiles, sod stabilization, slope roughening, maintaining existing vegetation, protection of trees, and preservation of mature vegetation. Specific non-structural control measures must meet the requirements listed below.

Specific control measures must meet the requirements listed below.

(a) Vehicle tracking controls shall either be implemented to minimize vehicle tracking of sediment from disturbed areas, or the areas where vehicle tracking occurs shall meet subsection Part I.B.1.a.i(b);

(b) Stormwater runoff from all disturbed areas and soil storage areas for which permanent or temporary stabilization is not implemented, must flow to at least one control measure to minimize sediment in the discharge. This may be accomplished through filtering, settling, or straining. The control measure must be selected, designed, installed and adequately sized in accordance with good engineering, hydrologic and pollution control practices. The control measure(s) must contain or filter flows in order to prevent the bypass of flows without treatment and must be appropriate for stormwater runoff from disturbed areas and for the expected flow rate, duration, and flow conditions (i.e., sheet or concentrated flow);

(c) Outlets that withdraw water from or near the surface shall be installed when discharging from basins and impoundments, unless infeasible.

(d) Maintain pre-existing vegetation or equivalent control measures for areas within 50 horizontal feet of receiving waters as defined by this permit, unless infeasible.

(e) Soil compaction must be minimized for areas where infiltration control measures will occur or where final stabilization will be achieved through vegetative cover.

(f) Unless infeasible, topsoil shall be preserved for those areas of a site that will utilize vegetative final stabilization.

(g) Minimize the amount of soil exposed during construction activity, including the disturbance of steep slopes.

ii. Practices for Other Common Pollutants

(a) Bulk storage, 55 gallons or greater, for petroleum products and other liquid chemicals must have secondary containment, or equivalent protection, in order to contain spills and to prevent spilled material from entering state waters.

(b) Control measures designed for concrete washout waste must be implemented. This includes washout waste discharged to the ground as authorized under this permit and washout waste from concrete trucks and masonry operations contained on site. The permittee must ensure the washing activities do not contribute pollutants to stormwater runoff, or receiving waters in accordance Part I.A.1.b.ii. Discharges that may reach groundwater must flow through soil

that has buffering capacity prior to reaching groundwater, as necessary to meet the effluent limits in this permit, including Part I.B.3.a. The concrete washout location shall be not be located in an area where shallow groundwater may be present and would result in buffering capacity not being adequate, such as near natural drainages, springs, or wetlands. This permit authorizes discharges to the ground of concrete washout waste.

iii. Stabilization Requirements
The following requirements must be implemented for each site.

(a) Temporary stabilization must be implemented for earth disturbing activities on any portion of the site where ground disturbing construction activity has permanently ceased, or temporarily ceased for more than 14 calendar days. Temporary stabilization methods may include, but are not limited to, tarps, soil tackifier, and hydroseed. The permittee may exceed the 14-day schedule when either the function of the specific area of the site requires it to remain disturbed, or, physical characteristics of the terrain and climate prevent stabilization. The SWMP must document the constraints necessitating the alternative schedule, provide the alternate stabilization schedule, and identify all locations where the alternative schedule is applicable on the site map.

(b) Final stabilization must be implemented for all construction sites. Final stabilization is reached when all ground surface disturbing activities at the construction site are complete; and, for all areas of ground surface disturbing activities, either a uniform vegetative cover with an individual plant density of at least 70 percent of pre-disturbance levels is established, or equivalent permanent alternative stabilization methods are implemented. The division may approve alternative final stabilization criteria for specific operations.

(c) Final stabilization must be designed and installed as a permanent feature. Final stabilization measures for obtaining a vegetative cover or alternative stabilization methods include, but are not limited to, the following as appropriate:

(1) Seed mix selection and application methods;

(2) Soil preparation and amendments;

(3) Soil stabilization methods (e.g., crimped straw, hydro mulch or rolled erosion control products);

(4) Appropriate sediment control measures as needed until final stabilization is achieved;

(5) Permanent pavement, hardscape, xeriscape, stabilized driving surfaces;

(6) Other alternative stabilization practices as applicable;

(d) The permittee(s) must ensure all temporary control measures are removed from the construction site once final stabilization is achieved, except when the control measure specifications allow the control measure to be left in place (i.e., bio-degradable control measures).

b. Maintenance

The permittee must ensure that all control measures remain in effective operating condition and are protected from activities that would reduce their effectiveness. Control measures must be maintained in accordance with good engineering, hydrologic and pollution control practices. Observations leading to the required maintenance of control measures can be made during a site inspection, or during general observations of site conditions. The necessary repairs or modifications to a control measure requiring routine maintenance, as defined in Part I.E., must be conducted to maintain an effective operating condition. This section is not subject to the requirements in Part I.B.1.c. below.

c. Corrective Actions

The permittee must assess the adequacy of control measures at the site, and the need for changes to those control measures, to ensure continued effective performance. When an inadequate control measure, as defined in Part I.E., is identified (i.e., new or replacement control measures become necessary), the following corrective action requirements apply. The permittee is in noncompliance with the permit until the inadequate control measure is replaced or corrected and returned to effective operating condition in compliance with Part I.B.1. and the general requirements in Part I.B.3. If the inadequate control measure results in noncompliance that meets the conditions of Part II.L., the permittee must also meet the requirements of that section.

i. The permittee must take all necessary steps to minimize or prevent the discharge of pollutants, until a control measure is implemented and made operational and/or an inadequate control measure is replaced or corrected and returned to effective operating condition. If it is infeasible to install or repair of control measure immediately after discovering the deficiency, the following must be documented and kept on record in accordance with the recordkeeping requirements in Part II.

(a) Describe why it is infeasible to initiate the installation or repair immediately; and

(b) Provide a schedule for installing or repairing the control measure and returning it to an effective operating condition as soon as possible.

ii. If applicable, the permittee must remove and properly dispose of any unauthorized release or discharge (e.g., discharge of non-stormwater, spill, or leak not authorized by this permit.) The permittee must also clean up any contaminated surfaces to minimize discharges of the material in subsequent storm events.

2. Discharges to an Impaired Waterbody

a. Total Maximum Daily Load (TMDL)

If the permittee's discharge flows to or could reasonably be expected to flow to any water body for which a TMDL has been approved, and stormwater discharges

associated with construction activity were assigned a pollutant-specific Wasteload Allocation (WLA) under the TMDL, the division may:

**i.** ensure the WLA is implemented properly through alternative local requirements, such as by a municipal stormwater permit; or

**ii.** notify the permittee of the WLA and amend the permittee's certification to add specific effluent limits and other requirements, as appropriate. The permittee may be required to do the following:

(a) under the permittee's SWMP, implement specific control measures based on requirements of the WLA, and evaluate whether the requirements are met through implementation of existing stormwater control measures or if additional control measures are necessary. Document the calculations or other evidence demonstrating that the requirements are expected to be met; and

(b) if the evaluation shows that additional or modified control measures are necessary, describe the type and schedule for the control measure additions or modifications.

iii. Discharge monitoring may also be required. The permittee may maintain coverage under the general permit provided they comply with the applicable requirements outlined above. The division reserves the right to require individual or alternate general permit coverage.

3. General Requirements

a. Discharges authorized by this permit shall not cause, have the reasonable potential to cause, or measurably contribute to an exceedance of any applicable water quality standard, including narrative standards for water quality.

b. The division may require sampling and testing, on a case-by-case basis, in the event that there is reason to suspect that the SWMP is not adequately minimizing pollutants in stormwater or in order to measure the effectiveness of the control measures in removing pollutants in the effluent. Such monitoring may include Whole Effluent Toxicity testing.

c. The permittee must comply with the lawful requirements of federal agencies, municipalities, counties, drainage districts and other local agencies including applicable requirements in Municipal Stormwater Management Programs developed to comply with CDPS permits. The permittee must comply with local stormwater management requirements, policies and guidelines including those for erosion and sediment control.

d. All construction site wastes must be properly managed to prevent potential pollution of state waters. This permit does not authorize on-site waste disposal.

e. This permit does not relieve the permittee of the reporting requirements in 40 CFR 110, 40 CFR 117 or 40 CFR 302. Any discharge of hazardous material must be handled in accordance with the division's Noncompliance Notification Requirements (see Part II.L. of the permit).

## C. STORMWATER MANAGEMENT PLAN (SWMP) REQUIREMENTS

1. SWMP General Requirements

   a. A SWMP shall be developed for each construction site covered by this permit. The SWMP must be prepared in accordance with good engineering, hydrologic and pollution control practices.

      i. For public emergency related sites a SWMP shall be created no later than 14 days after the commencement of construction activities.

   b. The permittee must implement the provisions of the SWMP as written and updated, from commencement of construction activity until final stabilization is complete. The division may review the SWMP.

   c. A copy of the SWMP must be retained onsite or be onsite when construction activities are occurring at the site unless the permittee specifies another location and obtains approval from the division.

2. SWMP Content

   a. The SWMP, at a minimum, must include the following elements.

      i. Qualified Stormwater Manager. The SWMP must list individual(s) by title and name who are designated as the site's qualified stormwater manager(s) responsible for implementing the SWMP in its entirety. This role may be filled by more than one individual.

      ii. Spill Prevention and Response Plan. The SWMP must have a spill prevention and response plan. The plan may incorporate by reference any part of a Spill Prevention Control and Countermeasure (SPCC) plan under section 311 of the Clean Water Act (CWA) or a Spill Prevention Plan required by a separate CDPS permit. The relevant sections of any referenced plans must be available as part of the SWMP consistent with Part I.C.4.

      iii. Materials Handling. The SWMP must describe and locate all control measures implemented at the site to minimize impacts from handling significant materials that could contribute pollutants to runoff. These handling procedures can include control measures for pollutants and activities such as, exposed storage of building materials, paints and solvents, landscape materials, fertilizers or chemicals, sanitary waste material, trash and equipment maintenance or fueling procedures.

      iv. Potential Sources of Pollution. The SWMP must list all potential sources of pollution which may reasonably be expected to affect the quality of stormwater discharges associated with construction activity from the site. This shall include, but is not limited to, the following pollutant sources:

         (a) disturbed and stored soils;

         (b) vehicle tracking of sediments;

         (c) management of contaminated soils;

         (d) loading and unloading operations;

(e) outdoor storage activities (erodible building materials, fertilizers, chemicals, etc.);

(f) vehicle and equipment maintenance and fueling;

(g) significant dust or particulate generating processes (e.g., saw cutting material, including dust);

(h) routine maintenance activities involving fertilizers, pesticides, herbicides, detergents, fuels, solvents, oils, etc.;

(i) on-site waste management practices (waste piles, liquid wastes, dumpsters);

(j) concrete truck/equipment washing, including washing of the concrete truck chute and associated fixtures and equipment;

(k) dedicated asphalt, concrete batch plants and masonry mixing stations;

(l) non-industrial waste sources such as worker trash and portable toilets.

v. Implementation of Control Measures. The SWMP must include design specifications that contain information on the implementation of the control measure in accordance with good engineering hydrologic and pollution control practices; including as applicable drawings, dimensions, installation information, materials, implementation processes, control measure-specific inspection expectations, and maintenance requirements.

The SWMP must include a documented use agreement between the permittee and the owner or operator of any control measures located outside of the permitted area, that are utilized by the permittee's construction site for compliance with this permit, but not under the direct control of the permittee. The permittee is responsible for ensuring that all control measures located outside of their permitted area, that are being utilized by the permittee's construction site, are properly maintained and in compliance with all terms and conditions of the permit. The SWMP must include all information required of and relevant to any such control measures located outside the permitted area, including location, installation specifications, design specifications and maintenance requirements.

vi. Site Description. The SWMP must include a site description which includes, at a minimum, the following:

(a) the nature of the construction activity at the site;

(b) the proposed schedule for the sequence for major construction activities and the planned implementation of control measures for each phase. (e.g.: clearing, grading, utilities, vertical, etc.);

(c) estimates of the total acreage of the site, and the acreage expected to be disturbed by clearing, excavation, grading, or any other construction activities;

(d) a summary of any existing data used in the development of the construction site plans or SWMP that describe the soil or existing potential for soil erosion;

(e) a description of the percent of existing vegetative ground cover relative to the entire site and the method for determining the percentage;

(f) a description of any allowable non-stormwater discharges at the site, including those being discharged under a division low risk discharge guidance policy;

(g) a description of areas receiving discharge from the site. Including a description of the immediate source receiving the discharge. If the stormwater discharge is to a municipal separate storm sewer system, the name of the entity owning that system, the location of the storm sewer discharge, and the ultimate receiving water(s); and

(h) a description of all stream crossings located within the construction site boundary.

vii. Site Map. The SWMP must include a site map which includes, at a minimum, the following:

(a) construction site boundaries;

(b) flow arrows that depict stormwater flow directions on-site and runoff direction;

(c) all areas of ground disturbance including areas of borrow and fill;

(d) areas used for storage of soil;

(e) locations of all waste accumulation areas, including areas for liquid, concrete, masonry, and asphalt;

(f) locations of dedicated asphalt, concrete batch plants and masonry mixing stations;

(g) locations of all structural control measures;

(h) locations of all non-structural control measures;

(i) locations of springs, streams, wetlands and other state waters, including areas that require pre-existing vegetation be maintained within 50 feet of a receiving water, where determined feasible in accordance with Part I.B.1.a.i.(d).; and

(j) locations of all stream crossings located within the construction site boundary.

viii. Final Stabilization and Long Term Stormwater Management. The SWMP must describe the practices used to achieve final stabilization of all disturbed areas at the site and any planned practices to control pollutants in stormwater discharges that will occur after construction operations are completed. Including but not limited to, detention/retention ponds, rain gardens, stormwater vaults, etc.

ix. Inspection Reports. The SWMP must include documented inspection reports in accordance with Part ID.

3. SWMP Review and Revisions

Permittees must keep a record of SWMP changes made that includes the date and identification of the changes. The SWMP must be amended when the following occurs:

a. a change in design, construction, operation, or maintenance of the site requiring implementation of new or revised control measures;

b. the SWMP proves ineffective in controlling pollutants in stormwater runoff in compliance with the permit conditions;

c. control measures identified in the SWMP are no longer necessary and are removed; and

d. corrective actions are taken onsite that result in a change to the SWMP.

For SWMP revisions made prior to or following a change(s) onsite, including revisions to sections addressing site conditions and control measures, a notation must be included in the SWMP that identifies the date of the site change, the control measure removed, or modified, the location(s) of those control measures, and any changes to the control measure(s). The permittee must ensure the site changes are reflected in the SWMP. The permittee is noncompliant with the permit until the SWMP revisions have been made.

4. SWMP Availability

A copy of the SWMP must be provided upon request to the division, EPA, and any local agency with authority for approving sediment and erosion plans, grading plans or stormwater management plans within the time frame specified in the request. If the SWMP is required to be submitted to any of these entities, the submission must include a signed certification in accordance with Part I.A.3.e., certifying that the SWMP is complete and compliant with all terms and conditions of the permit.

All SWMPs required under this permit are considered reports that must be available to the public under Section 308(b) of the CWA and Section 61.5(4) of the CDPS regulations. The permittee must make plans available to members of the public upon request. However, the permittee may claim any portion of a SWMP as confidential in accordance with 40 CFR Part 2.

## D. SITE INSPECTIONS

Site inspections must be conducted in accordance with the following requirements. The required inspection schedules are a minimum frequency and do not affect the permittee's responsibility to implement control measures in effective operating condition as prescribed in the SWMP. Proper maintenance of control measures may require more frequent inspections. Site inspections shall start within 7 calendar days of the commencement of construction activities on site.

1. Person Responsible for Conducting Inspections

The person(s) inspecting the site may be on the permittee's staff or a third party hired to conduct stormwater inspections under the direction of the permittee(s). The permittee is responsible for ensuring that the inspector is a qualified stormwater manager.

2. Inspection Frequency

Permittees must conduct site inspections in accordance with one of the following minimum frequencies, unless the site meets the requirements of Part ID.3

a. At least one inspection every 7 calendar days. Or

b. At least one inspection every 14 calendar days, if post-storm event inspections are conducted within 24 hours after the end of any precipitation or snowmelt event that causes surface erosion. Post-storm inspections may be used to fulfill the 14-day routine inspection requirement.

c. When site conditions make the schedule required in this section impractical, the permittee may petition the Division to grant an alternate inspection schedule. The alternative inspection schedule may not be implemented prior to written approval by the division and incorporation into the SWMP.

3. Inspection Frequency for Discharges to Outstanding Waters

Permittees must conduct site inspections at least once every 7 calendar days for sites that discharge to a water body designated as an Outstanding Water by the Water Quality Control Commission.

4. Reduced Inspection Frequency

The permittee may perform site inspections at the following reduced frequencies when one of the following conditions exists:

a. Post-Storm Inspections at Temporarily Idle Sites
For permittees choosing to combine 14-day inspections and post-storm-event-inspections, if no construction activities will occur following a storm event, post-storm event inspections must be conducted prior to re-commencing construction activities, but no later than 72 hours following the storm event. The delay of any post-storm event inspection must be documented in the inspection record. Routine inspections must still be conducted at least every 14 calendar days.

b. Inspections at Completed Sites/Areas
When the site, or portions of a site are awaiting establishment of a vegetative ground cover and final stabilization, the permittee must conduct a thorough inspection of the stormwater management system at least once every 30 days. Post-storm event inspections are not required under this schedule. This reduced inspection schedule is allowed if all of the following criteria are met:

i. all construction activities resulting in ground disturbance are complete;

ii. all activities required for final stabilization, in accordance with the SWMP, have been completed, with the exception of the application of seed that has not occurred due to seasonal conditions or the necessity for additional seed application to augment previous efforts; and

iii. the SWMP has been amended to locate those areas to be inspected in accordance with the reduced schedule allowed for in this paragraph.

c. Winter Conditions Inspections Exclusion

Inspections are not required for sites that meet all of the following conditions: construction activities are temporarily halted, snow cover exists over the entire site for an extended period, and melting conditions posing a risk of surface erosion do not exist. This inspection exception is applicable only during the period where melting conditions do not exist, and applies to the routine 7-day, 14-day and monthly inspections, as well as the post-storm-event inspections. When this inspection exclusion is implemented, the following information must be documented in accordance with the requirements in Part II:

i. dates when snow cover existed;

ii. date when construction activities ceased; and

iii. date melting conditions began.

5. Inspection Scope

a. Areas to be Inspected
When conducting a site inspection the following areas, if applicable, must be inspected for evidence of, or the potential for, pollutants leaving the construction site boundaries, entering the stormwater drainage system, or discharging to state waters:

i. construction site perimeter;

ii. all disturbed areas;

iii. designated haul routes;

iv. material and waste storage areas exposed to precipitation;

v. locations where stormwater has the potential to discharge offsite; and

vi. locations where vehicles exit the site.

b. Inspection Requirements

i. Visually verify whether all implemented control measures are in effective operational condition and are working as designed in their specifications to minimize pollutant discharges.

ii. Determine if there are new potential sources of pollutants.

iii. Assess the adequacy of control measures at the site to identify areas requiring new or modified control measures to minimize pollutant discharges.

iv. Identify all areas of non–compliance with the permit requirements and, if necessary, implement corrective action in accordance with Part IB.1.c.

c. Inspection Reports
The permittee must keep a record of all inspections conducted for each permitted site. Inspection reports must identify any incidents of noncompliance with the terms and conditions of this permit. Inspection records must be retained in accordance with Part II.O. and signed in accordance with Part I.A.3.f. At a minimum, the inspection report must include:

i. the inspection date;

ii. name(s) and title(s) of personnel conducting the inspection;

iii. weather conditions at the time of inspection;

iv. phase of construction at the time of inspection;

v. estimated acreage of disturbance at the time of inspection

vi. location(s) of discharges of sediment or other pollutants from the site;

vii. location(s) of control measures needing maintenance;

viii. location(s) and identification of inadequate control measures;

ix. location(s) and identification of additional control measures are needed that were not in place at the time of inspection;

x. description of the minimum inspection frequency (either in accordance with Part I.D.2., I.D.3. or I.D.4.) utilized when conducting each inspection.

xi. deviations from the minimum inspection schedule as required in Part I.D.2.;

xii. after adequate corrective action(s) and maintenance have been taken, or where a report does not identify any incidents requiring corrective action or maintenance, the report shall contain a statement as required in Part I.A.3.f.

## E. DEFINITIONS

For the purposes of this permit:

(1) Bypass - the intentional diversion of waste streams from any portion of a treatment facility in accordance with 40 CFR 122.41(m)(1)(i) and Regulation 61.2(12).

(2) Common Plan of Development or Sale - A contiguous area where multiple separate and distinct construction activities may be taking place at different times on different schedules, but remain related. The Division has determined that "contiguous" means construction activities located in close proximity to each other (within ¼ mile). Construction activities are considered to be "related" if they share the same development plan, builder or contractor, equipment, storage areas, etc. "Common plan of development or sale" includes construction activities that are associated with the construction of field wide oil and gas permits for facilities that are related.

(3) Construction Activity - Ground surface disturbing and associated activities (land disturbance), which include, but are not limited to, clearing, grading, excavation, demolition, installation of new or improved haul roads and access roads, staging areas, stockpiling of fill materials, and borrow areas. Construction does not include routine maintenance to maintain the original line and grade, hydraulic capacity, or original purpose of the facility. Activities to conduct repairs that are not part of routine maintenance or for replacement are construction activities and are not routine maintenance. Repaving activities where underlying and/or surrounding soil is exposed as part of the repaving operation are considered construction activities. Construction activity is from initial ground breaking to final stabilization regardless of ownership of the construction activities.

(4) Control Measure - Any best management practice or other method used to prevent or reduce the discharge of pollutants to state waters. Control measures include, but are not limited to, best management practices. Control measures can include other methods such as the installation, operation, and maintenance of structural controls and treatment devices.

(5) Control Measure Requiring Routine Maintenance - Any control measure that is still operating in accordance with its design and the requirements of this permit, but requires maintenance to prevent a breach of the control measure. See also inadequate control measure.

(6) Dedicated Asphalt, Concrete Batch Plants and Masonry Mixing Stations – are batch plants or mixing stations located on, or within ¼ mile of, a construction site and that provide materials only to that specific construction site.

(7) Final Stabilization - The condition reached when all ground surface disturbing activities at the site have been completed, and for all areas of ground surface disturbing activities where a uniform vegetative cover has been established with an individual plant density of at least 70 percent of pre-disturbance levels, or equivalent permanent, physical erosion reduction methods have been employed.

(8) Good Engineering, Hydrologic and Pollution Control Practices: are methods, procedures, and practices that:
   a. Are based on basic scientific fact(s).
   b. Reflect best industry practices and standards.
   c. Are appropriate for the conditions and pollutant sources.
   d. Provide appropriate solutions to meet the associated permit requirements, including practice based effluent limits.

(9) Inadequate Control Measure - Any control measure that is not designed or implemented in accordance with the requirements of the permit and/or any control measure that is not implemented to operate in accordance with its design. See also Control Measure Requiring Routine Maintenance.

(10) Infeasible – Not technologically possible, or not economically practicable and achievable in light of best industry practices.

(11) Minimize - reduce or eliminate to the extent achievable using control measures that are technologically available and economically practicable and achievable in light of best industry practice.

(12) Municipality - A city, town, county, district, association, or other public body created by, or under, State law and having jurisdiction over disposal of sewage, industrial wastes, or other wastes, or a designated and approved management agency under section 208 of CWA (1987).

(13) Municipal Separate Storm Sewer System (MS4) - A conveyance or system of conveyances (including roads with drainage systems, municipal streets, catch basins, curbs, gutters, ditches, man-made channels, or storm drains):

   a) owned or operated by a State, city, town, county, district, association, or other public body (created by or pursuant to State law) having jurisdiction over disposal of sewage, industrial wastes, stormwater, or other wastes, including special districts under State law such as a sewer district, flood control district or drainage district, or similar entity, or a designated and approved management agency under section 208 of the CWA that discharges to state waters;

      i. designed or used for collecting or conveying stormwater;
      ii. are not a combined sewer; and
      iii. are not part of a Publicly Owned Treatment Works (POTW). See 5 CCR 1002-61.2(62).

(14) Municipal Stormwater Management Program - A stormwater program operated by a municipality, typically to meet the requirements of the municipalities MS4 discharge certification.

(15) Operator - The party that has operational control over day-to-day activities at a project site which are necessary to ensure compliance with the permit. This party is authorized to direct individuals at a site to carry out activities required by the permit.(e.g. the general contractor)

(16) Owner - The party that has overall control of the activities and that has funded the implementation of the construction plans and specifications. This is the party with ownership of, a long term lease of, or easements on the property on which the construction activity is occurring (e.g., the developer).

(17) Permittee(s) - The owner and operator named in the discharge certification issued under this permit for the construction site specified in the certification.

(18) Point Source - Any discernible, confined, and discrete conveyance, including, but not limited to, any pipe, ditch, channel, tunnel, conduit, well, discrete fissure, container, rolling stock, concentrated animal feeding operation, or vessel or other floating craft, from which pollutants are or may be discharged. Point source does not include irrigation return flow. See 5 CCR 102-61.2(75).

(19) Pollutant - Dredged spoil, dirt, slurry, solid waste, incinerator residue, sewage, sewage sludge, garbage, trash, chemical waste, biological nutrient, biological material, radioactive material, heat, wrecked or discarded equipment, rock, sand, or any industrial, municipal or agricultural waste. See 5 CCR 1002-61.2(76).

(20) Presentation of credentials – a government issued form of identification, if in person; or (ii) providing name, position and purpose of inspection if request to enter is made via telephone, email or other form of electronic communication. A Permittee's non-response to a request to enter upon presentation of credentials constitutes a denial to such request, and may result in violation of the Permit.

(21) Process Water - Any water which, during manufacturing or processing, comes into contact with or results from the production of any raw material, intermediate product, finished product, by product or waste product.

(22) Public Emergency Related Site - a project initiated in response to an unanticipated emergency (e.g., mud slides, earthquake, extreme flooding conditions, disruption in essential public services), for which the related work requires immediate authorization to avoid imminent endangerment to human health or the environment, or to reestablish essential public services.

(23) Qualified Stormwater Manager - An individual knowledgeable in the principles and practices of erosion and sediment control and pollution prevention, and with the skills to assess conditions at construction sites that could impact stormwater quality and to assess the effectiveness of stormwater controls implemented to meet the requirements of this permit.

(24) Qualifying Local Program - A municipal program for stormwater discharges associated with small construction activity that was formally approved by the division as a qualifying local program.

(25) Receiving Water - Any classified or unclassified surface water segment (including tributaries) in the State of Colorado into which stormwater associated with construction activities discharges. This definition includes all water courses, even if they are usually dry, such as borrow ditches, arroyos, and other unnamed waterways.

(26) Severe Property Damage - substantial physical damage to property, damage to the treatment facilities which causes them to become inoperable, or substantial and permanent loss of natural resources which can reasonably be expected to occur in the absence of a bypass. Severe property damage does not mean economic loss caused by delays in production. See 40 CFR 122.41(m)(1)(ii).

(27) Significant Materials - Include, but not limited to, raw materials; fuels; materials such as solvents, detergents, and plastic pellets; finished materials such as metallic products; raw materials used in food processing or production; hazardous substances designated under section 101(14) of CERCLA; any chemical the permittee is required to report under section 313 of Title III of the Superfund Amendments and Reauthorization Act (SARA); fertilizers; pesticides; and waste products such as ashes, slag and sludge that have the potential to be released with stormwater discharges.

(28) Small Construction Activity - The discharge of stormwater from construction activities that result in land disturbance of equal to, or greater than, one acre and less than five acres. Small construction activity also includes the disturbance of less than one acre of total land area that is part of a larger common plan of development or sale, if the larger common plan ultimately disturbs equal to, or greater than, one acre and less than five acres.

(29) Spill - An unintentional release of solid or liquid material which may pollute state waters.

(30) State Waters - means any and all surface and subsurface waters which are contained in or flow in or through this state, but does not include waters in sewage systems, waters in treatment works of disposal systems, waters in potable water distribution systems, and all water withdrawn for use until use and treatment have been completed.

(31) Steep Slopes: where a local government, or industry technical manual (e.g., stormwater BMP manual) has defined what is to be considered a “steep slope”, this permit’s definition automatically adopts that definition. Where no such definition exists, steep slopes are automatically defined as those that are 3:1 or greater.

(32) Stormwater - Precipitation runoff, snow melt runoff, and surface runoff and drainage. See 5 CCR 1002-61.2(103).

(33) Total Maximum Daily Loads (TMDLs) -The sum of the individual wasteload allocations (WLA) for point sources and load allocations (LA) for nonpoint sources and natural background. For the purposes of this permit, a TMDL is a calculation of the maximum amount of a pollutant that a waterbody can receive and still meet water quality standards, and an allocation of that amount to the pollutant's sources. A TMDL includes WLAs, LAs, and must include a margin of safety (MOS), and account for seasonal variations. See section 303(d) of the CWA and 40 C.F.R. 130.2 and 130.7.

(34) Upset - an exceptional incident in which there is unintentional and temporary noncompliance with permit effluent limitations because of factors beyond the reasonable control of the permittee. An upset does not include noncompliance to the extent caused by operational error, improperly designed treatment facilities, inadequate treatment facilities, lack of preventative maintenance, or careless or improper operation in accordance with 40 CFR 122.41(n) and Regulation 61.2(114).

## F. MONITORING

The division may require sampling and testing, on a case-by-case basis. If the division requires sampling and testing, the division will send a notification to the permittee. Reporting procedures for any monitoring data collected will be included in the notification.

If monitoring is required, the following applies:

1. the thirty (30) day average must be determined by the arithmetic mean of all samples collected during a thirty (30) consecutive-day period; and

2. a grab sample, for monitoring requirements, is a single “dip and take” sample.

## G. Oil and Gas Construction

Stormwater discharges associated with construction activities directly related to oil and gas exploration, production, processing, and treatment operations or transmission facilities are regulated under the Colorado Discharge Permit System Regulations (5 CCR 1002-61), and require coverage under this permit in accordance with that regulation. However, references in this permit to specific authority under the CWA do not apply to stormwater discharges associated with these oil and gas related construction activities, to the extent that the references are limited by the federal Energy Policy Act of 2005.

## Part II: Standard Permit Conditions

### A. DUTY TO COMPLY

The permittee must comply with all conditions of this permit. Any permit noncompliance constitutes a violation of the Water Quality Control Act and is grounds for:

a. enforcement action;

b. permit termination, revocation and reissuance, or modification; or

c. denial of a permit renewal application.

### B. DUTY TO REAPPLY

If the permittee wishes to continue an activity regulated by this permit after the expiration date of this permit, the permittee must apply for and obtain authorization as required by Part I.A.3.k. of the permit.

### C. NEED TO HALT OR REDUCE ACTIVITY NOT A DEFENSE

It shall not be a defense for a permittee in an enforcement action that it would have been necessary to halt or reduce the permitted activity in order to maintain compliance with the conditions of this permit.

### D. DUTY TO MITIGATE

A permittee must take all reasonable steps to minimize or prevent any discharge in violation of this permit which has a reasonable likelihood of adversely affecting human health or the environment.

### E. PROPER OPERATION AND MAINTENANCE

A permittee must at all times properly operate and maintain all facilities and systems of treatment and control (and related appurtenances) that are installed or used by the permittee to achieve compliance with the conditions of this permit. Proper operation and maintenance also includes adequate laboratory controls and appropriate quality assurance procedures. This provision requires the operation of backup or auxiliary facilities or similar systems which are installed by the permittee only when the operation is necessary to achieve compliance with the conditions of this permit. This requirement can be met by meeting the requirements for Part I.B., I.C., and I.D. above. See also 40 C.F.R. § 122.41(e).

### F. PERMIT ACTIONS

This permit may be modified, revoked and reissued, or terminated for cause. The permittee request for a permit modification, revocation and reissuance, or termination, or a notification of planned changes or anticipated noncompliance does not stay any permit condition. Any request for modification, revocation, reissuance, or termination under this permit must comply with all terms and conditions of Regulation 61.8(8).

### G. PROPERTY RIGHTS

In accordance with 40 CFR 122.41(g) and 5 CCR 1002-61, 61.8(9):

1. The issuance of a permit does not convey any property or water rights in either real or personal property, or stream flows or any exclusive privilege.

2. The issuance of a permit does not authorize any injury to person or property or any invasion of personal rights, nor does it authorize the infringement of federal, state, or local laws or regulations.
3. Except for any toxic effluent standard or prohibition imposed under Section 307 of the Federal act or any standard for sewage sludge use or disposal under Section 405(d) of the Federal act, compliance with a permit during its term constitutes compliance, for purposes of enforcement, with Sections 301, 302, 306, 318, 403, and 405(a) and (b) of the Federal act. However, a permit may be modified, revoked and reissued, or terminated during its term for cause as set forth in Section 61.8(8) of the Colorado Discharge Permit System Regulations.

## H. DUTY TO PROVIDE INFORMATION

The permittee shall furnish to the division, within a reasonable time, any information which the division may request to determine whether cause exists for modifying, revoking and reissuing, or terminating this permit, or to determine compliance with this permit. The permittee shall also furnish to the division, upon request, copies of records required to be kept by this permit in accordance with 40 CFR 122.41(h) and/or Regulation 61.8(3)(q).

## I. INSPECTION AND ENTRY

The permittee shall allow the division and the authorized representative, upon the presentation of credentials as required by law, to allow for inspections to be conducted in accordance with 40 CFR 122.41(i), Regulation 61.8(3), and Regulation 61.8(4):

1. to enter upon the permittee's premises where a regulated facility or activity is located or in which any records are required to be kept under the terms and conditions of this permit;
2. at reasonable times to have access to and copy any records required to be kept under the terms and conditions of this permit;
3. at reasonable times, inspect any monitoring equipment or monitoring method required in the permit; and
4. to enter upon the permittee's premises in a reasonable manner and at a reasonable time to inspect or investigate, any actual, suspected, or potential source of water pollution, or any violation of the Colorado Water Quality Control Act. The investigation may include: sampling of any discharges, stormwater or process water, taking of photographs, interviewing site staff on alleged violations and other matters related to the permit, and assessing any and all facilities or areas within the site that may affect discharges, the permit, or an alleged violation.

The permittee shall provide access to the division or other authorized representatives upon presentation of proper credentials. A permittee's non-response to a request to enter upon presentation of credentials constitutes a denial of such request, and may result in a violation of the permit.

## J. MONITORING AND RECORDS

1. Samples and measurements taken for the purpose of monitoring must be representative of the volume and nature of the monitored activity.

2. The permittee must retain records of all monitoring information, including all calibration and maintenance records and all original strip chart recordings for continuous monitoring instrumentation, copies of all reports required by this permit, and records of all data used to complete the application for this permit, for a period of at least three years from the date the permit expires or the date the permittee's authorization is terminated. This period may be extended by request of the division at any time.

3. Records of monitoring information must include:
   a. The date, exact place, and time of sampling or measurements;
   b. The individual(s) who performed the sampling or measurements;
   c. The date(s) analyses were performed
   d. The individual(s) who performed the analyses;
   e. The analytical techniques or methods used; and
   f. The results of such analyses.

4. Monitoring must be conducted according to test procedures approved under 40 CFR Part 136, unless other test procedures have been specified in the permit.

## K. SIGNATORY REQUIREMENTS

1. Authorization to Sign:

   All documents required to be submitted to the division by the permit must be signed in accordance with the following criteria:

   a. For a corporation: By a responsible corporate officer. For the purpose of this subsection, a responsible corporate officer means:

      i. a president, secretary, treasurer, or vice president of the corporation in charge of a principal business function, or any other person who performs similar policy- or decision-making functions for the corporation, or

      ii. the manager of one or more manufacturing, production, or operating facilities, provided, the manager is authorized to make management decisions which govern the operation of the regulated facility including having the explicit or implicit duty of making major capital investment recommendations, and initiating and directing other comprehensive measures to assure long term environmental compliance with environmental laws and regulations; the manager can ensure that the necessary systems are established or actions taken to gather complete and accurate information for permit application requirements; and where authority to sign documents has been assigned or delegated to the manager in accordance with corporate procedures.

   b. For a partnership or sole proprietorship: By a general partner or the proprietor, respectively; or

   c. For a municipality, state, federal, or other public agency: By either a principal executive officer or ranking elected official. For purposes of this subsection, a principal executive officer of a federal agency includes

      i. (i) the chief executive officer of the agency, or

ii. (ii) a senior executive officer having responsibility for the overall operations of a principal geographic unit of the agency. (e.g., Regional Administrator of EPA)

2. Electronic Signatures

For persons signing applications for coverage under this permit electronically, in addition to meeting other applicable requirements stated above, such signatures must meet the same signature, authentication, and identity-proofing standards set forth at 40 CFR § 3.2000(b) for electronic reports (including robust second-factor authentication). Compliance with this requirement can be achieved by submitting the application using the Colorado Environmental Online Service (CEOS) system.

3. Change in Authorization to Sign

If an authorization is no longer accurate because a different individual or position has responsibility for the overall operation of the facility, a new authorization must be submitted to the division, prior to the re-authorization, or together with any reports, information, or applications to be signed by an authorized representative.

## L. REPORTING REQUIREMENTS

1. Planned Changes

The permittee shall give advance notice to the division, in writing, of any planned physical alterations or additions to the permitted facility in accordance with 40 CFR 122.41(l) and Regulation 61.8(5)(a). Notice is required only when:

a. The alteration or addition to a permitted facility may meet one of the criteria for determining whether a facility is a new source in 40 CFR 122.29(b); or

b. The alteration or addition could significantly change the nature or increase the quantity of pollutants discharged. This notification applies to pollutants which are subject neither to effluent limitations in the permit, nor to notification requirements under 40 CFR 122.41(a)(1).

2. Anticipated Non-Compliance

The permittee shall give advance notice to the division, in writing, of any planned changes in the permitted facility or activity that may result in noncompliance with permit requirements. The timing of notification requirements differs based on the type of non-compliance as described in subparagraphs 5, 6, 7, and 8 below.

3. Transfer of Ownership or Control

The permittee shall notify the division, in writing, ten (10) calendar days in advance of a proposed transfer of the permit. This permit is not transferable to any person except after notice is given to the division.

a. Where a facility wants to change the name of the permittee, the original permittee (the first owner or operators) must submit a Notice of Termination.

b. The new owner or operator must submit an application. See also signature requirements in Part II.K, above.

c. A permit may be automatically transferred to a new permittee if:

   i. The current permittee notifies the Division in writing 30 calendar days in advance of the proposed transfer date; and

   ii. The notice includes a written agreement between the existing and new permittee(s) containing a specific date for transfer of permit responsibility, coverage and liability between them; and

   iii. The division does not notify the existing permittee and the proposed new permittee of its intent to modify, or revoke and reissue the permit.

   iv. Fee requirements of the Colorado Discharge Permit System Regulations, Section 61.15, have been met.

4. Monitoring reports

   Monitoring results must be reported at the intervals specified in this permit per the requirements of 40 CFR 122.41(l)(4).

5. Compliance Schedules

   Reports of compliance or noncompliance with, or any progress reports on, interim and final requirements contained in any compliance schedule in the permit, shall be submitted on the date listed in the compliance schedule section. The fourteen (14) calendar day provision in Regulation 61.8(4)(n)(i) has been incorporated into the due date.

6. Twenty-four hour reporting

   In addition to the reports required elsewhere in this permit, the permittee shall report the following circumstances orally within twenty-four (24) hours from the time the permittee becomes aware of the circumstances, and shall mail to the division a written report containing the information requested within five (5) working days after becoming aware of the following circumstances:

   a. Circumstances leading to any noncompliance which may endanger health or the environment regardless of the cause of the incident;

   b. Circumstances leading to any unanticipated bypass which exceeds any effluent limitations in the permit;

   c. Circumstances leading to any upset which causes an exceedance of any effluent limitation in the permit;

d. Daily maximum violations for any of the pollutants limited by Part I of this permit. This includes any toxic pollutant or hazardous substance or any pollutant specifically identified as the method to control any toxic pollutant or hazardous substance.

e. The division may waive the written report required under subparagraph 6 of this section if the oral report has been received within 24 hours.

7. Other non-compliance

A permittee must report all instances of noncompliance at the time monitoring reports are due. If no monitoring reports are required, these reports are due at least annually in accordance with Regulation 61.8(4)(p). The annual report must contain all instances of non-compliance required under either subparagraph 5 or subparagraph 6 of this subsection.

8. Other information

Where a permittee becomes aware that it failed to submit any relevant facts in a permit application, or submitted incorrect information in a permit application, or in any report to the Permitting Authority, it has a duty to promptly submit such facts or information.

## M. BYPASS

1. Bypass not exceeding limitations

The permittees may allow any bypass to occur which does not cause effluent limitations to be exceeded, but only if it also is for essential maintenance to assure efficient operation. These bypasses are not subject to the provisions of Part II.M.2 of this permit. See 40 CFR 122.41(m)(2).

2. Notice of bypass

a. Anticipated bypass. If the permittee knows in advance of the need for a bypass, the permittee must submit prior notice, if possible at least ten days before the date of the bypass. ee 40 CFR §122.41(m)(3)(i) and/or Regulation 61.9(5)(c).

b. Unanticipated bypass. The permittee must submit notice of an unanticipated bypass in accordance with Part II.L.6. See 40 CFR §122.41(m)(3)(ii) .

3. Prohibition of Bypass

Bypasses are prohibited and the division may take enforcement action against the permittee for bypass, unless:

i. the bypass is unavoidable to prevent loss of life, personal injury, or severe property damage;

ii. There were no feasible alternatives to the bypass, such as the use of auxiliary treatment facilities, retention of untreated wastes, or maintenance during normal periods of equipment downtime. This condition is not satisfied if adequate backup equipment should have been installed in the exercise of reasonable engineering judgment to prevent a bypass which occurred during normal periods of equipment downtime or preventive maintenance; and

iii. proper notices were submitted to the division.

## N. UPSET

1. Effect of an upset

An upset constitutes an affirmative defense to an action brought for noncompliance with permit effluent limitations if the requirements of Part II.N.2. of this permit are met. No determination made during administrative review of claims that noncompliance was caused by upset, and before an action for noncompliance, is final administrative action subject to judicial review in accordance with Regulation 61.8(3)(j).

2. Conditions necessary for demonstration of an Upset

A permittee who wishes to establish the affirmative defense of upset shall demonstrate through properly signed contemporaneous operating logs, or other relevant evidence that

a. an upset occurred and the permittee can identify the specific cause(s) of the upset;

b. the permitted facility was at the time being properly operated and maintained; and

c. the permittee submitted proper notice of the upset as required in Part II.L.6.(24-hour notice); and

d. the permittee complied with any remedial measure necessary to minimize or prevent any discharge or sludge use or disposal in violation of this permit which has a reasonable likelihood of adversely affecting human health or the environment. In addition to the demonstration required above, a permittee who wishes to establish the affirmative defense of upset for a violation of effluent limitations based upon water quality standards shall also demonstrate through monitoring, modeling or other methods that the relevant standards were achieved in the receiving water.

3. Burden of Proof

In any enforcement proceeding, the permittee seeking to establish the occurrence of an upset has the burden of proof.

## O. RETENTION OF RECORDS

1. Post-Expiration or Termination Retention

Copies of documentation required by this permit, including records of all data used to complete the application for permit coverage to be covered by this permit, must be

retained for at least three years from the date that permit coverage expires or is terminated. This period may be extended by request of EPA at any time.

2. On-site Retention

   The permittee must retain an electronic version or hardcopy of the SWMP at the construction site from the date of the initiation of construction activities to the date of expiration or inactivation of permit coverage; unless another location, specified by the permittee, is approved by the division.

## P. REOPENER CLAUSE

1. Procedures for modification or revocation

   Permit modification or revocation of this permit or coverage under this permit will be conducted according to Regulation 61.8(8).

2. Water quality protection

   If there is evidence indicating that the stormwater discharges authorized by this permit cause, have the reasonable potential to cause or contribute to an excursion above any applicable water quality standard, the permittee may be required to obtain an individual permit, or the permit may be modified to include different limitations and/or requirements.

## Q. SEVERABILITY

The provisions of this permit are severable. If any provisions or the application of any provision of this permit to any circumstances, is held invalid, the application of such provision to other circumstances and the application of the remainder of this permit shall not be affected.

## R. NOTIFICATION REQUIREMENTS

1. Notification to Parties

   All notification requirements, excluding information submitted using the CEOS portal, shall be directed as follows:

   a. Oral Notifications, during normal business hours shall be to:
      Clean Water Compliance Section
      Water Quality Control Division
      Telephone: (303) 692-3500

   b. Written notification shall be to:
      Clean Water Compliance Section
      Water Quality Control Division
      Colorado Department of Public Health and Environment
      WQCD-WQP-B2
      4300 Cherry Creek Drive South
      Denver, CO 80246-1530

## S. RESPONSIBILITIES

1. Reduction, Loss, or Failure of Treatment Facility

   The permittee has the duty to halt or reduce any activity if necessary to maintain compliance with the effluent limitations of the permit. It shall not be a defense for a permittee in an enforcement action that it would be necessary to halt or reduce the permitted activity in order to maintain compliance with the conditions of this permit.

## T. Oil and Hazardous Substance Liability

Nothing in this permit shall be construed to preclude the institution of any legal action or relieve the permittee from any responsibilities, liabilities, or penalties to which the permittee is or may be subject to under Section 311 (Oil and Hazardous Substance Liability) of the CWA.

## U. Emergency Powers

Nothing in this permit shall be construed to prevent or limit application of any emergency power of the division.

## V. Confidentiality

Any information relating to any secret process, method of manufacture or production, or sales or marketing data which has been declared confidential by the permittee, and which may be acquired, ascertained, or discovered, whether in any sampling investigation, emergency investigation, or otherwise, shall not be publicly disclosed by any member, officer, or employee of the Water Quality Control Commission or the division, but shall be kept confidential. Any person seeking to invoke the protection of of this section shall bear the burden of proving its applicability. This section shall never be interpreted as preventing full disclosure of effluent data.

## W. Fees

The permittee is required to submit payment of an annual fee as set forth in the 2016 amendments to the Water Quality Control Act. Section 25-8-502 (1.1) (b), and the Colorado Discharge Permit System Regulations 5 CCR 1002-61, Section 61.15 as amended. Failure to submit the required fee when due and payable is a violation of the permit and will result in enforcement action pursuant to Section 25-8-601 et. seq., C.R.S.1973 as amended.

## X. Duration of Permit

The duration of a permit shall be for a fixed term and shall not exceed five (5) years. If the permittee desires to continue to discharge, a permit renewal application shall be submitted at least ninety (90) calendar days before this permit expires. Filing of a timely and complete application shall cause the expired permit to continue in force to the effective date of the new permit. The permit's duration may be extended only through administrative extensions and not through interim modifications. If the permittee anticipates there will be no discharge after the expiration date of this permit, the division should be promptly notified so that it can terminate the permit in accordance with Part I.A.3.i.

## Y. Section 307 Toxics

If a toxic effluent standard or prohibition, including any applicable schedule of compliance specified, is established by regulation pursuant to Section 307 of the Federal Act for a toxic pollutant which is present in the permittee's discharge and such standard or prohibition is more stringent than any limitation upon such pollutant in the discharge permit, the division

shall institute proceedings to modify or revoke and reissue the permit to conform to the toxic effluent standard or prohibition

# APPENDIX C
# FEMA FIRM MAP

# NOTES TO USERS

This map is for use in administering the National Flood Insurance Program. It does not necessarily identify all areas subject to flooding, particularly from local drainage sources of small size. The **community map repository** should be consulted for possible updated or additional flood hazard information.

To obtain more detailed information in areas where **Base Flood Elevations** (BFEs) and/or **floodways** have been determined, users are encouraged to consult the Flood Profiles and Floodway Data and/or Summary of Stillwater Elevations tables contained within the Flood Insurance Study (FIS) report that accompanies this FIRM. Users should be aware that BFEs shown on the FIRM represent rounded whole-foot elevations. These BFEs are intended for flood insurance rating purposes only and should not be used as the sole source of flood elevation information. Accordingly, flood elevation data presented in the FIS report should be utilized in conjunction with the FIRM for purposes of construction and/or floodplain management.

**Coastal Base Flood Elevations** shown on this map apply only landward of 0.0' North American Vertical Datum of 1988 (NAVD88). Users of this FIRM should be aware that coastal flood elevations are also provided in the Summary of Stillwater Elevations table in the Flood Insurance Study report for this jurisdiction. Elevations shown in the Summary of Stillwater Elevations table should be used for construction and/or floodplain management purposes when they are higher than the elevations shown on this FIRM.

Boundaries of the **floodways** were computed at cross sections and interpolated between cross sections. The floodways were based on hydraulic considerations with regard to requirements of the National Flood Insurance Program. Floodway widths and other pertinent floodway data are provided in the Flood Insurance Study report for this jurisdiction.

Certain areas not in Special Flood Hazard Areas may be protected by **flood control structures**. Refer to section 2.4 "Flood Protection Measures" of the Flood Insurance Study report for information on flood control structures for this jurisdiction.

The **projection** used in the preparation of this map was Universal Transverse Mercator (UTM) zone 13. The **horizontal datum** was NAD83, GRS80 spheroid. Differences in datum, spheroid, projection or UTM zones zones used in the production of FIRMs for adjacent jurisdictions may result in slight positional differences in map features across jurisdiction boundaries. These differences do not affect the accuracy of this FIRM.

Flood elevations on this map are referenced to the **North American Vertical Datum of 1988 (NAVD88)**. These flood elevations must be compared to structure and ground elevations referenced to the same **vertical datum**. For information regarding conversion between the National Geodetic Vertical Datum of 1929 and the North American Vertical Datum of 1988, visit the National Geodetic Survey website at http://www.ngs.noaa.gov/ or contact the National Geodetic Survey at the following address:

NGS Information Services
NOAA, N/NGS12
National Geodetic Survey
SSMC-3, #9202
1315 East-West Highway
Silver Spring, MD 20910-3282

To obtain current elevation, description, and/or location information for **bench marks** shown on this map, please contact the Information Services Branch of the National Geodetic Survey at (301) 713-3242 or visit its website at http://www.ngs.noaa.gov/.

**Base Map** information shown on this FIRM was provided in digital format by El Paso County, Colorado Springs Utilities, City of Fountain, Bureau of Land Management, National Oceanic and Atmospheric Administration, United States Geological Survey, and Anderson Consulting Engineers, Inc. These data are current as of 2006.

This map reflects more detailed and up-to-date **stream channel configurations and floodplain delineations** than those shown on the previous FIRM for this jurisdiction. The floodplains and floodways that were transferred from the previous FIRM may have been adjusted to conform to these new stream channel configurations. As a result, the Flood Profiles and Floodway Data tables in the Flood Insurance Study Report (which contains authoritative hydraulic data) may reflect stream channel distances that differ from what is shown on this map. The profile baselines depicted on this map represent the hydraulic modeling baselines that match the flood profiles and Floodway Data Tables if applicable, in the FIS report. As a result, the profile baselines may deviate significantly from the new base map channel representation and may appear outside of the floodplain.

**Corporate limits** shown on this map are based on the best data available at the time of publication. Because changes due to annexations or de-annexations may have occurred after this map was published, map users should contact appropriate community officials to verify current corporate limit locations.

Please refer to the separately printed **Map Index** for an overview map of the county showing the layout of map panels; community map repository addresses; and a Listing of Communities table containing National Flood Insurance Program dates for each community as well as a listing of the panels on which each community is located.

Contact **FEMA Map Service Center** (MSC) via the FEMA Map Information eXchange (FMIX) 1-877-336-2627 for information on available products associated with this FIRM. Available products may include previously issued Letters of Map Change, a Flood Insurance Study Report, and/or digital versions of this map. The MSC may also be reached by Fax at 1-800-358-9620 and its website at http://www.msc.fema.gov/.

If you have **questions about this map** or questions concerning the National Flood Insurance Program in general, please call **1-877-FEMA MAP** (1-877-336-2627) or visit the FEMA website at http://www.fema.gov/business/nfip.

**El Paso County Vertical Datum Offset Table**

| Flooding Source | Vertical Datum Offset (ft) |
|---|---|
| REFER TO SECTION 3.3 OF THE EL PASO COUNTY FLOOD INSURANCE STUDY FOR STREAM BY STREAM VERTICAL DATUM CONVERSION INFORMATION | |

**Panel Location Map**

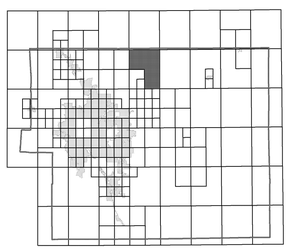

This Digital Flood Insurance Rate Map (DFIRM) was produced through a Cooperating Technical Partner (CTP) agreement between the State of Colorado Water Conservation Board (CWCB) and the Federal Emergency Management Agency (FEMA).

Additional Flood Hazard information and resources are available from local communities and the Colorado Water Conservation Board.

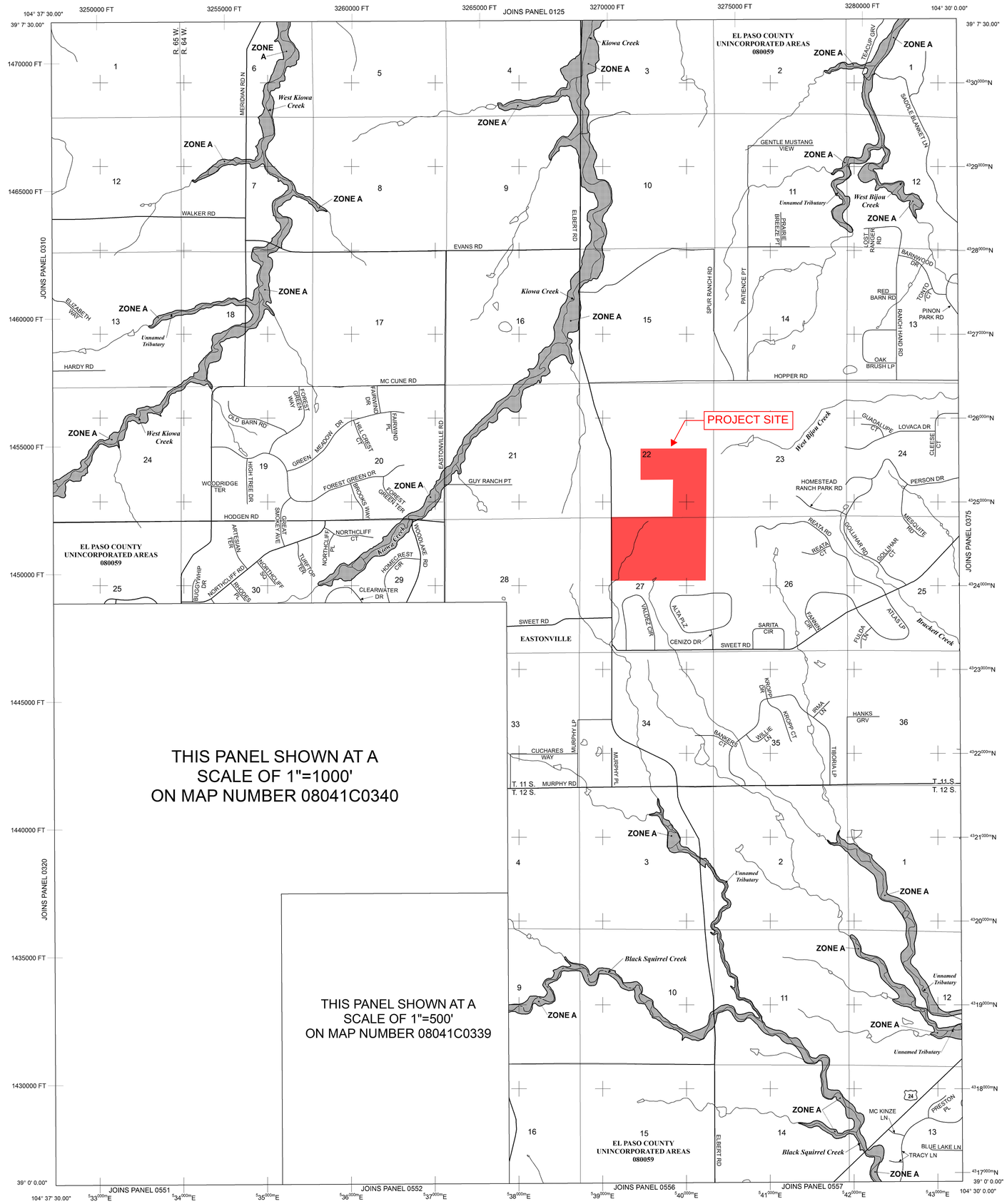


# LEGEND

SPECIAL FLOOD HAZARD AREAS (SFHAS) SUBJECT TO INUNDATION BY THE 1% ANNUAL CHANCE FLOOD

The 1% annual chance flood (100-year flood), also known as the base flood, is the flood that has a 1% chance of being equaled or exceeded in any given year. The Special Flood Hazard Area is the area subject to flooding by the 1% annual chance flood. Areas of Special Flood Hazard include Zones A, AE, AH, AO, AR, A99, V, and VE. The Base Flood Elevation is the water-surface elevation of the 1% annual chance flood.

| | |
|---|---|
| ZONE A | No Base Flood Elevations determined. |
| ZONE AE | Base Flood Elevations determined. |
| ZONE AH | Flood depths of 1 to 3 feet (usually areas of ponding); Base Flood Elevations determined. |
| ZONE AO | Flood depths of 1 to 3 feet (usually sheet flow on sloping terrain); average depths determined. For areas of alluvial fan flooding, velocities also determined. |
| ZONE AR | Special Flood Hazard Area Formerly protected from the 1% annual chance flood by a flood control system that was subsequently decertified. Zone AR indicates that the former flood control system is being restored to provide protection from the 1% annual chance or greater flood. |
| ZONE A99 | Area to be protected from 1% annual chance flood by a Federal flood protection system under construction; no Base Flood Elevations determined. |
| ZONE V | Coastal flood zone with velocity hazard (wave action); no Base Flood Elevations determined. |
| ZONE VE | Coastal flood zone with velocity hazard (wave action); Base Flood Elevations determined. |

FLOODWAY AREAS IN ZONE AE

The floodway is the channel of a stream plus any adjacent floodplain areas that must be kept free of encroachment so that the 1% annual chance flood can be carried without substantial increases in flood heights.

OTHER FLOOD AREAS

| | |
|---|---|
| ZONE X | Areas of 0.2% annual chance flood; areas of 1% annual chance flood with average depths of less than 1 foot or with drainage areas less than 1 square mile; and areas protected by levees from 1% annual chance flood. |

OTHER AREAS

| | |
|---|---|
| ZONE X | Areas determined to be outside the 0.2% annual chance floodplain. |
| ZONE D | Areas in which flood hazards are undetermined, but possible. |

COASTAL BARRIER RESOURCES SYSTEM (CBRS) AREAS

OTHERWISE PROTECTED AREAS (OPAs)

CBRS areas and OPAs are normally located within or adjacent to Special Flood Hazard Areas.

| | |
|---|---|
| | Floodplain boundary |
| | Floodway boundary |
| | Zone D Boundary |
| | CBRS and OPA boundary |
| | Boundary dividing Special Flood Hazard Areas of different Base Flood Elevations, flood depths or flood velocities. |
| 513 | Base Flood Elevation line and value; elevation in feet* |
| (EL 987) | Base Flood Elevation value where uniform within zone; elevation in feet* |

* Referenced to the North American Vertical Datum of 1988 (NAVD 88)

| | |
|---|---|
| A — A | Cross section line |
| 23 - - - - 23 | Transect line |
| 97° 07' 30.00" 32° 22' 30.00" | Geographic coordinates referenced to the North American Datum of 1983 (NAD 83) |
| 4275000mN | 1000-meter Universal Transverse Mercator grid ticks, zone 13 |
| 6000000 FT | 5000-foot grid ticks: Colorado State Plane coordinate system, central zone (FIPSZONE 0502), Lambert Conformal Conic Projection |
| DX5510 × | Bench mark (see explanation in Notes to Users section of this FIRM panel) |
| • M1.5 | River Mile |

MAP REPOSITORIES
Refer to Map Repositories list on Map Index

EFFECTIVE DATE OF COUNTYWIDE
FLOOD INSURANCE RATE MAP
**MARCH 17, 1997**

EFFECTIVE DATE(S) OF REVISION(S) TO THIS PANEL
**DECEMBER 7, 2018** - to update corporate limits, to change Base Flood Elevations and Special Flood Hazard Areas, to update map format, to add roads and road names, and to incorporate previously issued Letters of Map Revision.

For community map revision history prior to countywide mapping, refer to the Community Map History Table located in the Flood Insurance Study report for this jurisdiction.

To determine if flood insurance is available in this community, contact your insurance agent or call the National Flood Insurance Program at 1-800-638-6620.

**MAP SCALE 1" = 2000'**

1000 0 2000 4000 FEET

600 0 600 1200 METERS

NFIP

NATIONAL FLOOD INSURANCE PROGRAM

**PANEL 0350G**

# FIRM
## FLOOD INSURANCE RATE MAP
## EL PASO COUNTY, COLORADO
### AND INCORPORATED AREAS

**PANEL 350 OF 1300**

(SEE MAP INDEX FOR FIRM PANEL LAYOUT)

CONTAINS:

| COMMUNITY | NUMBER | PANEL | SUFFIX |
|---|---|---|---|
| EL PASO COUNTY | 080059 | 0350 | G |

Notice to User: The **Map Number** shown below should be used when placing map orders; the **Community Number** shown above should be used on insurance applications for the subject community.

**MAP NUMBER**
**08041C0350G**

**MAP REVISED**
**DECEMBER 7, 2018**

Federal Emergency Management Agency

# APPENDIX D
# SOILS INFORMATION

# Hydrologic Soil Group—El Paso County Area, Colorado

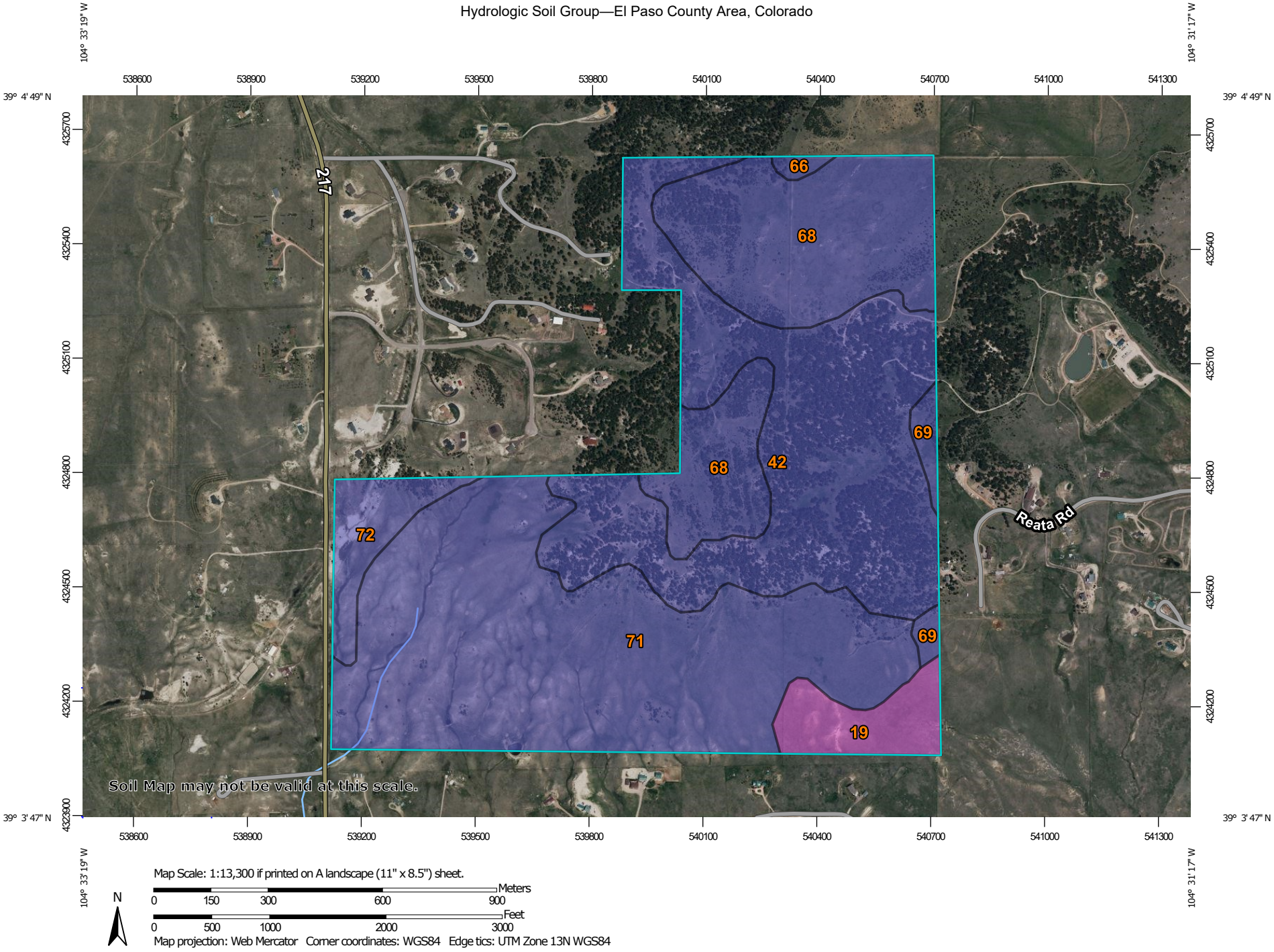


Map Scale: 1:13,300 if printed on A landscape (11" x 8.5") sheet.

N

Meters: 0 150 300 600 900

Feet: 0 500 1000 2000 3000

Map projection: Web Mercator Corner coordinates: WGS84 Edge tics: UTM Zone 13N WGS84

## MAP LEGEND

**Area of Interest (AOI)**

Area of Interest (AOI)

**Soils**

**Soil Rating Polygons**

- A
- A/D
- B
- B/D
- C
- C/D
- D
- Not rated or not available

**Soil Rating Lines**

- A
- A/D
- B
- B/D
- C
- C/D
- D
- Not rated or not available

**Soil Rating Points**

- A
- A/D
- B
- B/D
- C
- C/D
- D
- Not rated or not available

**Water Features**

Streams and Canals

**Transportation**

- Rails
- Interstate Highways
- US Routes
- Major Roads
- Local Roads

**Background**

Aerial Photography

## MAP INFORMATION

The soil surveys that comprise your AOI were mapped at 1:24,000.

Warning: Soil Map may not be valid at this scale.

Enlargement of maps beyond the scale of mapping can cause misunderstanding of the detail of mapping and accuracy of soil line placement. The maps do not show the small areas of contrasting soils that could have been shown at a more detailed scale.

Please rely on the bar scale on each map sheet for map measurements.

Source of Map: Natural Resources Conservation Service
Web Soil Survey URL:
Coordinate System: Web Mercator (EPSG:3857)

Maps from the Web Soil Survey are based on the Web Mercator projection, which preserves direction and shape but distorts distance and area. A projection that preserves area, such as the Albers equal-area conic projection, should be used if more accurate calculations of distance or area are required.

This product is generated from the USDA-NRCS certified data as of the version date(s) listed below.

Soil Survey Area: El Paso County Area, Colorado
Survey Area Data: Version 20, Sep 2, 2022

Soil map units are labeled (as space allows) for map scales 1:50,000 or larger.

Date(s) aerial images were photographed: Jun 9, 2021—Jun 12, 2021

The orthophoto or other base map on which the soil lines were compiled and digitized probably differs from the background imagery displayed on these maps. As a result, some minor shifting of map unit boundaries may be evident.

# Hydrologic Soil Group

| Map unit symbol | Map unit name | Rating | Acres in AOI | Percent of AOI |
|---|---|---|---|---|
| 19 | Columbine gravelly sandy loam, 0 to 3 percent slopes | A | 18.1 | 4.1% |
| 42 | Kettle-Rock outcrop complex | B | 135.4 | 30.8% |
| 66 | Peyton sandy loam, 1 to 5 percent slopes | B | 1.7 | 0.4% |
| 68 | Peyton-Pring complex, 3 to 8 percent slopes | B | 91.1 | 20.7% |
| 69 | Peyton-Pring complex, 8 to 15 percent slopes | B | 5.6 | 1.3% |
| 71 | Pring coarse sandy loam, 3 to 8 percent slopes | B | 171.8 | 39.0% |
| 72 | Pring coarse sandy loam, 8 to 15 percent slopes | B | 16.2 | 3.7% |
| **Totals for Area of Interest** | | | **440.0** | **100.0%** |

## Description

Hydrologic soil groups are based on estimates of runoff potential. Soils are assigned to one of four groups according to the rate of water infiltration when the soils are not protected by vegetation, are thoroughly wet, and receive precipitation from long-duration storms.

The soils in the United States are assigned to four groups (A, B, C, and D) and three dual classes (A/D, B/D, and C/D). The groups are defined as follows:

Group A. Soils having a high infiltration rate (low runoff potential) when thoroughly wet. These consist mainly of deep, well drained to excessively drained sands or gravelly sands. These soils have a high rate of water transmission.

Group B. Soils having a moderate infiltration rate when thoroughly wet. These consist chiefly of moderately deep or deep, moderately well drained or well drained soils that have moderately fine texture to moderately coarse texture. These soils have a moderate rate of water transmission.

Group C. Soils having a slow infiltration rate when thoroughly wet. These consist chiefly of soils having a layer that impedes the downward movement of water or soils of moderately fine texture or fine texture. These soils have a slow rate of water transmission.

Group D. Soils having a very slow infiltration rate (high runoff potential) when thoroughly wet. These consist chiefly of clays that have a high shrink-swell potential, soils that have a high water table, soils that have a claypan or clay layer at or near the surface, and soils that are shallow over nearly impervious material. These soils have a very slow rate of water transmission.

If a soil is assigned to a dual hydrologic group (A/D, B/D, or C/D), the first letter is for drained areas and the second is for undrained areas. Only the soils that in their natural condition are in group D are assigned to dual classes.

## Rating Options

*Aggregation Method:* Dominant Condition

*Component Percent Cutoff: None Specified*

*Tie-break Rule:* Higher

# APPENDIX E
# IDENTIFICATION OF POLLUTANT SOURCES

# Outdoor Storage of Materials Log

| Identification of Pollutant | Date Onsite | Date Removed | Containment Method |
|---|---|---|---|
| | | | |
| | | | |
| | | | |
| | | | |
| | | | |
| | | | |
| | | | |
| | | | |
| | | | |
| | | | |
| | | | |
| | | | |
| | | | |
| | | | |
| | | | |

# Vehicle Equipment Maintenance and Fueling Log

| Identification of Pollutant | Date Onsite | Date Removed | Containment Method |
|---|---|---|---|
| | | | |
| | | | |
| | | | |
| | | | |
| | | | |
| | | | |
| | | | |
| | | | |
| | | | |
| | | | |
| | | | |
| | | | |
| | | | |
| | | | |
| | | | |

# Routine Maintenance Log

| Identification of Pollutant | Date Onsite | Date Removed | Containment Method |
|---|---|---|---|
| | | | |
| | | | |
| | | | |
| | | | |
| | | | |
| | | | |
| | | | |
| | | | |
| | | | |
| | | | |
| | | | |
| | | | |
| | | | |
| | | | |
| | | | |

# Onsite Waste Management Log

| Identification of Pollutant | Date Onsite | Date Removed | Containment Method |
|---|---|---|---|
| | | | |
| | | | |
| | | | |
| | | | |
| | | | |
| | | | |
| | | | |
| | | | |
| | | | |
| | | | |
| | | | |
| | | | |
| | | | |
| | | | |
| | | | |

# Non-Industrial Waste Sources Log

| Identification of Pollutant | Date Onsite | Date Removed | Containment Method |
|---|---|---|---|
| | | | |
| | | | |
| | | | |
| | | | |
| | | | |
| | | | |
| | | | |
| | | | |
| | | | |
| | | | |
| | | | |
| | | | |
| | | | |
| | | | |
| | | | |

# Additional Pollutant Sources Log

| Identification of Pollutant | Date Onsite | Date Removed | Containment Method |
|---|---|---|---|
| | | | |
| | | | |
| | | | |
| | | | |
| | | | |
| | | | |
| | | | |
| | | | |
| | | | |
| | | | |
| | | | |
| | | | |
| | | | |
| | | | |
| | | | |

# APPENDIX F
# LAND DISTURBANCE / CONTROL MEASURE / STABILIZATION LOG

Land Disturbance / **Control Measure** / Stabilization Log

| Date Initiated | Description of Activity | Date Ceased | Identification of BMP / Stabilization Method | Date Implemented | Date Removed |
|---|---|---|---|---|---|
| | | | | | |
| | | | | | |
| | | | | | |
| | | | | | |
| | | | | | |
| | | | | | |
| | | | | | |
| | | | | | |
| | | | | | |
| | | | | | |
| | | | | | |
| | | | | | |

# APPENDIX G
# CDPHE ENVIRONMENTAL SPILL REPORTING / CONTROL MEASURE

involving a radioactive or infectious material, or there is a release of a marine pollutant.

Spills and incidents that have or may result in a spill along a highway must be reported to the nearest law enforcement agency immediately. The Colorado State Patrol and CDPHE must also be notified as soon as possible. In the event of a spill of hazardous waste at a transfer facility, the transporter must notify CDPHE within 24 hours if the spill exceeds 55 gallons or if there is a fire or explosion.

The National Response Center should be notified as soon as possible after discovery of a release of a hazardous liquid or carbon dioxide from a pipeline system if a person is killed or injured, there is a fire or explosion, there is property damage of $50,000 or more, or any nearby water body is contaminated.

The National Response Center and the Colorado Public Utilities Commission Gas Pipeline Safety Section must be notified as soon as possible, but not more than two hours after discovery of a release of gas from a natural gas pipeline or liquefied natural gas facility if a person is killed or injured, there is an emergency shutdown of the facility, or there is property damage of $50,000 or more. The Colorado Public Utilities Commission should also be notified if there is a gas leak from a pipeline, liquefied natural gas system, master meter system or a propane system that results in the evacuation of 50 or more people from an occupied building or the closure of a roadway.

### Oil and Gas Exploration

All Class I major events on federal lands, including releases of hazardous substances in excess of the CERCLA reportable quantity and spills of more than 100 barrels of fluid and/or 500 MCF of gas released, must be reported to the Bureau of Land Management (BLM) immediately. Spills of oil, gas, salt water, toxic liquids and waste materials must also be reported to the BLM and the surface management agency.

Spills of exploration and production (E&P) waste on state or private lands in excess of 20 barrels, and spills of any size that impact or threaten to impact waters of the state, an occupied structure, or public byway must be reported to the Colorado Oil and Gas Conservation Commission as soon as practicable, but not more than 24 hours after discovery. Spills of any size that impact or threaten to impact waters of the state must be reported to CDPHE immediately. Spills that impact or threaten to impact a surface water intake must be reported to the emergency contact for that facility immediately after discovery. Spills of more than five (5) barrels of E&P waste must be reported in writing to the Oil and Gas Conservation Commission within 10 days of discovery.

## REPORTING NUMBERS

National Response Center (24-hour)
**1-800-424-8802**

CDPHE Colorado Environmental Release and Incident Reporting Line (24-hour)
**1-877-518-5608**

Radiation Incident Reporting Line (24-hour)
**303-877-9757**

Colorado State Patrol (24-hour)
**303-239-4501**

Division of Oil and Public Safety
(business hours)
**303-318-8547**

Oil and Gas Conservation Commission
(business hours)
**303-894-2100**

Colorado Public Utilities Commission Gas Pipeline Safety Section (business hours)
**303-894-2851**

Local Emergency Planning Committees
(to obtain list, business hours)
**720-852-6603**

Colorado Department of Public Health and Environment

# Environmental Spill Reporting

Colorado Department of Public Health and Environment
4300 Cherry Creek Drive South
Denver, CO 80246-1530

**http://www.cdphe.state.co.us**

January 2009

When a release of a hazardous material or other substance occurs to the environment, there are a number of reporting and notification requirements that must be followed by the company or individual responsible for the release. Most spills are covered by more than one reporting requirement, and **all** requirements must be met. In addition to verbal notification, written reports are generally required. This brochure briefly explains the major requirements. A more detailed description is provided in the “Reporting Environmental Releases in Colorado” Guidance Document, available on the web.

Releases that must be reported to the Colorado Department of Public Health and Environment (CDPHE) may be reported to the Colorado Environmental Release and Incident Reporting Line.

# ENVIRONMENTAL SPILL REPORTING

## CERCLA, EPCRA and RCRA

The Comprehensive Environmental Response, Compensation and Liability Act (CERCLA) and the Emergency Planning and Community Right-to-Know Act (EPCRA) require that a release of a reportable quantity or more of a hazardous substance to the environment be reported immediately to the appropriate authorities when the release is discovered.

Under CERCLA, reportable quantities were established for hazardous substances listed or designated under other environmental statutes. These include:

- all hazardous air pollutants (HAPs) listed under Section 112(b) of the Clean Air Act.
- all toxic pollutants designated under Section 307(a) or Section 311(b)(2)(A) of the Clean Water Act.
- all Resource Conservation and Recovery Act (RCRA) characteristic and listed hazardous wastes.
- any element, compound, or substance designated under Section 102 of CERCLA.

EPCRA established a list of extremely hazardous substances (EHS) that could cause serious irreversible health effects from accidental releases. Many substances appear on both the CERCLA and EPCRA lists. EPCRA extremely hazardous substances that are also CERCLA hazardous substances have the same reportable quantity (RQ) as under CERCLA. EPCRA extremely hazardous substances that are not listed under CERCLA have a reportable quantity that is equal to their threshold planning quantity (TPQ). A list of CERCLA reportable quantities is included in 40 CFR Section 302.4. A list of EPCRA threshold planning quantities is included in 40 CFR Part 355 Appendices A & B.

CERCLA-reportable releases must be reported immediately to the National Response Center (NRC), while EPCRA-reportable releases must be reported immediately to the National Response Center, the State Emergency Response Commission (SERC) and the affected Local Emergency Planning Committee (LEPC). If the release is an EPCRA extremely hazardous substance, but not a CERCLA hazardous substance, and there is absolutely no potential to affect off-site persons, then only the State Emergency Planning Commission (represented by CDPHE for reporting purposes) and the Local Emergency Planning Committee need to be notified.

In the case of a release of hazardous waste stored in tanks, RCRA-permitted facilities and large quantity generators must also notify CDPHE within 24 hours of any release to the environment that is greater than one (1) pound.

## Radiation Control

Each licensee or registrant must report to the Radiation Incident Reporting Line in the event of lost, stolen or missing licensed or registered radioactive materials or radiation machines, releases of radioactive materials, contamination events, and fires or explosions involving radioactive materials. Releases of radionuclides are reportable under CERCLA.

## Clean Water Act

The Clean Water Act requires the person in charge of a facility or vessel to immediately report to the National Response Center all discharges of oil or designated hazardous substances to water. Oil means oil of any kind or form. Designated hazardous substances are included in the CERCLA list.

The Clean Water Act also requires that facilities with a National Pollutant Discharge Elimination System (NPDES) permit report to the National Response Center within 24 hours of becoming aware of any unanticipated bypasses or upsets that cause an exceedance of the effluent limits in their permit and any violations of their maximum daily discharge limits for pollutants listed in their permit.

A release of any chemical, oil, petroleum product, sewage, etc., which may enter waters of the state of Colorado (which include surface water, ground water and dry gullies and storm sewers leading to surface water) must be reported immediately to CDPHE. Any accidental discharge to the sanitary sewer system must be reported immediately to the local sewer authority and the affected wastewater treatment plant. For additional regarding releases to water, please see "Guidance for Reporting Spills under the Colorado Water Quality Control Act and Colorado Discharge Permits" at http://www.cdphe.state.co.us/op/wqcc/Resources/Guidance/spillguidance.pdf.

## Clean Air Act

Hazardous air pollutants (HAPs) are designated as hazardous substances under CERCLA. If a facility has an air permit but the permit does not allow for or does not specify the release of a substance, or if the facility does not have an air permit, then all releases in excess of the CERCLA / EPCRA reportable quantity for that substance must be reported to the National Response Center and CDPHE. If the facility releases more of a substance than is allowed under its air permit, the facility must also report the release. Discharges of a substance that are within the allowable limits specified in the facility's permit do not need to be reported.

## Regulated Storage Tanks

Owners and operators of regulated storage tank systems must report a release or suspected release of regulated substances to the Division of Oil and Public Safety at the Colorado Department of Labor and Employment within 24 hours. Under this program, the reportable quantity for petroleum releases is 25 gallons or more, or any amount that causes a sheen on nearby surface water. Spills of less than 25 gallons of petroleum must be immediately contained and cleaned up. If cleanup cannot be accomplished within 24 hours, the Division of Oil and Public Safety must be notified immediately.

Spills of hazardous substances from tanks in excess of the CERCLA or EPCRA reportable quantity must be reported immediately to the National Response Center, CDPHE and the local fire authority, and to the Division of Oil and Public Safety within 24 hours.

## Transportation and Pipelines

The person in physical possession of a hazardous material must notify the National Response Center as soon as practical, but not to exceed 12 hours after the incident, if as a direct result of the hazardous material, a person is killed or injured, there is an evacuation of the general public lasting more than an hour, a major transportation artery is shut down for an hour or more, the flight pattern of an aircraft is altered, there is fire, spillage or suspected contamination

# APPENDIX H
# STORM EVENT LOG

| Rain Gauge Data | | |
|---|---|---|
| **Date:** | **Location:** | **Reading in decimal fraction of inches** |
| | | |
| | | |
| | | |
| | | |
| | | |
| | | |
| | | |
| | | |
| | | |
| | | |
| | | |
| | | |
| | | |
| | | |
| | | |
| | | |
| | | |
| | | |
| | | |
| | | |
| | | |
| | | |
| | | |
| | | |
| | | |

# APPENDIX I
# INSPECTION AND SAMPLING REPORTS

# CONSTRUCTION STORMWATER SITE INSPECTION REPORT

| | | | |
|---|---|---|---|
| Facility Name | | Permittee | |
| Date of Inspection | | Weather Conditions | |
| Permit Certification # | | Disturbed Acreage | |
| Phase of Construction | | Inspector Title | |
| Inspector Name | | | |

| | YES | NO |
|---|---|---|
| Is the above inspector a qualified stormwater manager?<br>(permittee is responsible for ensuring that the inspector is a qualified stormwater manager) | ☐ | ☐ |

| INSPECTION FREQUENCY | |
|---|---|
| Check the box that describes the minimum inspection frequency utilized when conducting each inspection | |
| At least one inspection every 7 calendar days | ☐ |
| At least one inspection every 14 calendar days, with post-storm event inspections conducted within 24 hours after the end of any precipitation or snowmelt event that causes surface erosions | ☐ |
| • This is this a post-storm event inspection. Event Date: _____ | ☐ |
| Reduced inspection frequency - Include site conditions that warrant reduced inspection frequency | ☐ |
| • Post-storm inspections at temporarily idle sites | ☐ |
| • Inspections at completed sites/area | ☐ |
| • Winter conditions exclusion | ☐ |
| Have there been any deviations from the minimum inspection schedule?<br>If yes, describe below. | YES ☐ NO ☐ |
| | |

| INSPECTION REQUIREMENTS* |
|---|
| i. Visually verify all implemented control measures are in effective operational condition and are working as designed in the specifications |
| ii. Determine if there are new potential sources of pollutants |
| iii. Assess the adequacy of control measures at the site to identify areas requiring new or modified control measures to minimize pollutant discharges |
| iv. Identify all areas of non-compliance with the permit requirements, and if necessary, implement corrective action |
| *Use the attached **Control Measures Requiring Routine Maintenance** and **Inadequate Control Measures Requiring Corrective Action** forms to document results of this assessment that trigger either maintenance or corrective actions |

| AREAS TO BE INSPECTED | | | |
|---|---|---|---|
| Is there evidence of, or the potential for, pollutants leaving the construction site boundaries, entering the stormwater drainage system or discharging to state waters at the following locations? | | | |
| | NO | YES | If "YES" describe discharge or potential for discharge below. Document related maintenance, inadequate control measures and corrective actions **Inadequate Control Measures Requiring Corrective Action** form |
| Construction site perimeter | ☐ | ☐ | |
| All disturbed areas | ☐ | ☐ | |
| Designated haul routes | ☐ | ☐ | |
| Material and waste storage areas exposed to precipitation | ☐ | ☐ | |
| Locations where stormwater has the potential to discharge offsite | ☐ | ☐ | |
| Locations where vehicles exit the site | ☐ | ☐ | |
| Other: _____ | ☐ | ☐ | |

**CONTROL MEASURES REQUIRING ROUTINE MAINTENANCE**

Definition: Any control measure that is still operating in accordance with its design and the requirements of the permit, but requires maintenance to prevent a breach of the control measure. These items are not subject to the corrective action requirements as specified in Part I.B.1.c of the permit.

| Are there control measures requiring maintenance? | NO | YES | |
|---|---|---|---|
| | ☐ | ☐ | If "YES" document below |

| Date Observed | Location | Control Measure | Maintenance Required | Date Completed |
|---|---|---|---|---|
| | | | | |
| | | | | |
| | | | | |
| | | | | |
| | | | | |
| | | | | |
| | | | | |
| | | | | |
| | | | | |
| | | | | |

**INADEQUATE CONTROL MEASURES REQUIRING CORRECTIVE ACTION**

Definition: Any control measure that is not designed or implemented in accordance with the requirements of the permit and/or any control measure that is not implemented to operate in accordance with its design. This includes control measures that have not been implemented for pollutant sources. If it is infeasible to install or repair the control measure immediately after discovering the deficiency the reason must be documented and a schedule included to return the control measure to effective operating condition as possible.

| Are there inadequate control measures requiring corrective action? | NO | YES | |
|---|---|---|---|
| | ☐ | ☐ | If "YES" document below |

| Are there additional control measures needed that were not in place at the time of inspection? | NO | YES | |
|---|---|---|---|
| | ☐ | ☐ | If "YES" document below |

| Date Discovered | Location | Description of Inadequate Control Measure | Description of Corrective Action | Was deficiency corrected when discovered? YES/NO<br>if "NO" provide reason and schedule to correct | Date Corrected |
|---|---|---|---|---|---|
| | | | | | |
| | | | | | |
| | | | | | |
| | | | | | |
| | | | | | |
| | | | | | |
| | | | | | |
| | | | | | |

## REPORTING REQUIREMENTS

The permittee shall report the following circumstances orally within twenty-four (24) hours from the time the permittee becomes aware of the circumstances, and shall mail to the division a written report containing the information requested within five (5) working days after becoming aware of the following circumstances. The division may waive the written report required if the oral report has been received within 24 hours.

**All Noncompliance Requiring 24-Hour Notification per Part II.L.6 of the Permit**

**a. Endangerment to Health or the Environment**

Circumstances leading to any noncompliance which may endanger health or the environment regardless of the cause of the incident (See Part II.L.6.a of the Permit)

*This category would primarily result from the discharge of pollutants in violation of the permit*

**b. Numeric Effluent Limit Violations**

- Circumstances leading to any unanticipated bypass which exceeds any effluent limitations (See Part II.L.6.b of the Permit)
- Circumstances leading to any upset which causes an exceedance of any effluent limitation (See Part II.L.6.c of the Permit)
- Daily maximum violations (See Part II.L.6.d of the Permit)

*Numeric effluent limits are very uncommon in certifications under the COR400000 general permit. This category of noncompliance only applies if numeric effluent limits are included in a permit certification.*

| Has there been an incident of noncompliance requiring 24-hour notification? | NO | YES | |
|---|---|---|---|
| | ☐ | ☐ | If "YES" document below |

| Date and Time of Incident | Location | Description of Noncompliance | Description of Corrective Action | Date and Time of 24 Hour Oral Notification | Date of 5 Day Written Notification * |
|---|---|---|---|---|---|
| | | | | | |
| | | | | | |

*Attach copy of 5 day written notification to report. Indicate if written notification was waived, including the name of the division personnel who granted waiver.

After adequate corrective action(s) and maintenance have been taken, or where a report does not identify any incidents requiring corrective action or maintenance, the individual(s) designated as the Qualified Stormwater Manager, shall sign and certify the below statement:

"I verify that, to the best of my knowledge and belief, all corrective action and maintenance items identified during the inspection are complete, and the site is currently in compliance with the permit."

| | |
|---|---|
| Name of Qualified Stormwater Manager | Title of Qualified Stormwater Manager |
| Signature of Qualified Stormwater Manager | Date |

Notes/Comments

# APPENDIX J
# SWMP AMENDMENT LOG

## AMENDMENT LOG

| Amendment No. | Date | Brief Description of Amendment | Prepared By |
|---|---|---|---|
| | | | |
| | | | |
| | | | |
| | | | |
| | | | |
| | | | |
| | | | |
| | | | |
| | | | |
| | | | |
| | | | |
| | | | |
| | | | |
| | | | |
| | | | |
| | | | |
| | | | |
| | | | |
| | | | |
| | | | |
| | | | |
| | | | |
| | | | |
| | | | |