EPC STORMWATER REVIEW COMMENTS IN ORANGE BOXES WITH BLACK TEXT

Noted, thank you.

Info Only: Comments from Service Engineering Engineering are in blue text.

Final Drainage Report

Overlook at Homestead Filing No. 1
El Paso County, Colorado

Prepared for:
PT Overlook LLC
1864 Woodmoor Drive, Suite 100
Monument, CO 80132

Prepared by:
Kimley-Horn and Associates, Inc.
2 North Nevada Avenue, Suite 900
Colorado Springs, Colorado 80903
(719) 453-0180
Contact: Kevin Kofford, P.E.

Project #: 196239003

PCD Filing No.: SF2425

FILING NUMBER ADDED

Prepared: September 18, 2024

Kimley»Horn

CERTIFICATION

DESIGN ENGINEER'S STATEMENT

The attached drainage plan and report were prepared under my direction and supervision and are correct to the best of my knowledge and belief. Said drainage report has been prepared according to the criteria established by the County for drainage reports and said report is in conformity with the master plan of the drainage basin. I accept responsibility for any liability caused by any negligent acts, errors or omissions on my part in preparation of this report.

SIGNATURE (Affix Seal): _____

Kevin Kofford, P.E. Date

OWNER/DEVELOPER'S STATEMENT

I, the developer, have read and will comply with all of the requirements specified in this Drainage Report and Plan.

PT Overlook LLC
Name of Developer

_____
Authorized Signature Date

Joe DesJardin
Printed Name

Director of Entitlements
Title

1864 Woodmoor Drive Suite 100, Monument, CO 80132
Address

EL PASO COUNTY

Filed in accordance with the requirements of the Drainage Criteria Manual, Volumes 1 and 2, El Paso County Engineering Criteria Manual and Land Development Code as amended.

_____ _____
Joshua Palmer, P.E. Date
County Engineer/ ECM Administrator

Conditions:

TABLE OF CONTENTS

INTRODUCTION

NOTED. TEXT UPDATED TO REFLECT FINAL PLAT APPLICATION

PURPOSE AND SCOPE OF STUDY

This project is for a final plat, not for early grading. Please revise accordingly.

The purpose of this Final Drainage Report (FDR) is to document the drainage design in support of early grading improvements for the proposed Overlook at Homestead Subdivision Filing No. 1("the Project") on behalf of PT Overlook LLC. The Project is located within the jurisdictional limits of El Paso County ("the County"). Therefore, the hydrologic and hydraulic design is based on the County's criteria which is described in further detail within the report.

Make reference to the early grading project, EGP241 so it is acknowledged this came first, but otherwise the report shouldn't contain references to early grading.

LOCATION

The Project Site located east of Elbert Road within El Paso County, Colorado including parcels 4122000005, 4100000255, 4100000256. More

REFERENCE TO EGP ADDED TO TEXT

on 22 and a Portion of Section 27, Township 11 South, Range 64 West of the 6th PM, County of El Paso, State of Colorado. North of the project site is agricultural and rural residential land, to the east is Homestead Ranch Park owned and maintained by El Paso County, and to the south and west is Homestead Ranch subdivisions. Filing No.1 consists of 36, five acre lots and is located just south the Apex Ranch Subdivision and the large butte. A vicinity map has been provided in the **Appendix** of this report.

The Site is currently owned by PT Overlook LLC and will be developed by PT Overlook LLC.

DESCRIPTION OF PROPERTY

The entire Overlook project is approximately 350.8 acres consisting of mostly vacant, undeveloped land with native vegetation and a rural single-family residential home situated in the northwest corner of the Site and is classified as Agricultural Grazing Land to be subdivided into 62 total lots. Filing No. 1 consists of approximately 202.72 acres which will be subdivided into 36 5-acre parcels. Vegetation within the site is characterized primarily by prairie grasses along with some area of scrub brush and trees. The Site does not currently provide water quality or detention for the Project area.

The existing topography consists of slopes ranging from 1% to 33% with an existing butte covering much of the northern portion of the Site. Filing No. 1 includes a roadway and temporary cul-de-sac on the top of the existing butte, but the majority of the site is located south of the butte. Flows in the existing conditions run off site into one of four major drainage basins. Filing No. 1 only discharges into the Upper Black Squirrel Creek and La Vega Ranch drainage basins, to the south. Detailed descriptions of the existing major drainage basins can be found later in the report.

According to NRCS soil mapping data, USCS Type B soils are the primary soil type within the site. Type B soils having a moderate infiltration rate when thoroughly wet. These consist chiefly of moderately deep or deep, moderately well drained, or well drained soils that have moderately fine texture to moderately coarse texture. These soils have a moderate rate of water transmission. Soils mapping information has been provided in the **Appendix**.

The Filing No. 1 development of this site will consist of 36, five-acre residential lots with roadway improvements, roadway grading, three full spectrum detention ponds, roadside ditches, culverts, and drainage swales.

FLOODPLAIN STATEMENT

The Site is located outside the 100-year floodplain and within Zone X (an area of minimal flood hazard) as noted on the FEMA FIRM Map No. 08041C0350G revised on December 7, 2018 (See **Appendix**).

DRAINAGE BASINS

MAJOR BASIN DESCRIPTIONS

The Project Site is tributary to four major drainage basins in the El Paso County Drainage Basin Map. Bijou Creek, East Kiowa Creek, Upper Black Squirrel, and La Vega Ranch Drainage Basins. These drainage basins are located in the north central portion of El Paso County. The northeast portion of the site is tributary to Bijou Creek Drainage Basin, the northwest portion of the site is tributary to East Kiowa Creek Drainage Basin, the southwest portion of the site is tributary to Upper Black Squirrel Drainage Basin, and the southeast portion of the site is tributary to La Vega Ranch Drainage Basin. Filing No. 1 only discharges into the Upper Black Squirrel Creek and La Vega Ranch Drainage Basins, to the south. In an effort to simplify basin nomenclature, the following naming conventions have been used for both existing and proposed drainage sub-basins labeling. Proposed Basins have been designed in effort to keep runoff within the same existing basins, as to not transfer runoff between basins.

A - Upper Black Squirrel Drainage Basin (CHBS2000)
B - La Vega Ranch Drainage Basin (CHBR0400)
C - East Kiowa Creek Drainage Basin (KIKI0400)
D - Bijou Creek Drainage Basin (BIBI0200)

El Paso County Drainage Basin map has been provided in the **Appendix**. A summary of flows in existing and proposed conditions has been added to the **Appendix**.

COMPLIANCE WITH PREVIOUS FINAL DRAINAGE REPORT

A portion of the proposed Project Site falls within the existing approved "Final Drainage Report for Apex Ranch Estates" by Terra Nova Engineering, Inc. approval date September 3, 2008. Flows from these basins will be at or below history values. These flows are not included in the calculation for the existing detention facility for Filing No. 1. Excerpts from the previously approved FDR have been provided in the **Appendix**.

A Preliminary Drainage Report was submitted to the County as part of the SP238 Application for the Preliminary Plat.

EXISTING SUB-BASIN DESCRIPTIONS

Historically the runoff from the Site drains into one of two major drainage basins for Filing No. 1 as described above. Slopes vary from 2-33% throughout the site with various natural features. The Site has been divided into 8 onsite basins A1-A2, B1-B3, and B3A, and 2 offsite basins OS-A1 and OS-A2. The offsite basins are located west of the Site and generally flow west towards to existing stormwater infrastructure. Descriptions of each individual sub-basin can be found below.

TITLE, PREPARER, APPROVAL DATES ADDED FOR BOTH PRELIM DRAINAGE REPORT AND EG FDR.

In the existing conditions flows wi nto

Pease include the name of the preparer and the approval date for SP238. Additionally, provide the Final Drainage Report for early grading, including the preparer's name and the approval date.

Kimley»Horn

natural drainage channels. These channels can be found on the existing conditions drainage map, and hydraulic analysis of these channels in existing conditions have been completed. Both of these items can be found in the **Appendix**. Flows will generally follow historic drainage patterns with regards to the existing natural drainage channels.

Sub-Basin A1
This on-site sub-basin consists of an area of 19.92 acres, located in the southwest corner of the Site. Drainage flows overland from the northeast to the southwest where it is captured by an existing 36" CMP culvert at DP 1 and outfalls west of Elbert Rd. The weighted imperviousness for this sub-basin is 8%. Runoff during the 5-year and 100-year events are 8.43 cfs and 38.41 cfs respectively. Refer to the **Appendix** for the Existing Conditions Drainage Map.

Sub-Basin A2
This on-site sub-basin consists of an area of 63.97 acres, located in the southwest corner of the Site. Drainage flows overland from the northeast to the southwest where it flows offsite at DP 2 into Reata subdivision south of the Site. The weighted imperviousness for this sub-basin is 1%. Runoff during the 5-year and 100-year events are 13.47 cfs and 91.03 cfs respectively. Refer to the **Appendix** for the Existing Conditions Drainage Map.

Sub-Basin B1
This on-site sub-basin consists of an area of 43.28 acres, located in the south-central portion of the Site. Drainage flows overland from the north to the south where it flows offsite at DP 3 into Reata subdivision south of the Site. The weighted imperviousness for this sub-basin is 0%. Runoff during the 5-year and 100-year events are 9.34 cfs and 68.56 cfs respectively. Refer to the **Appendix** for the Existing Conditions Drainage Map.

Sub-Basin B2
This on-site sub-basin consists of an area of 42.42 acres, located in the south-central portion of the Site. Drainage flows overland from the north to the south where it flows offsite at DP 4 into Reata subdivision south of the Site. The weighted imperviousness for this sub-basin is 0%. Runoff during the 5-year and 100-year events are 9.41 cfs and 69.09 cfs respectively. Refer to the **Appendix** for the Existing Conditions Drainage Map.

Sub-Basin B3
This on-site sub-basin consists of an area of 25.42 acres, located in the southeast portion of the Site. Drainage flows overland from the north to the south where it flows offsite at DP 5 into Reata subdivision south of the Site. The weighted imperviousness for this sub-basin is 0%. Runoff during the 5-year and 100-year events are 5.91 cfs and 43.40 cfs respectively. Refer to the **Appendix** for the Existing Conditions Drainage Map.

Sub-Basin B3A
This on-site sub-basin consists of an area of 24.23 acres, located in the southeast corner of the Site. Drainage flows overland from the north to the south where it flows offsite at DP 5A into Reata subdivision south of the Site. The weighted imperviousness for this sub-basin is 0%. Runoff during the 5-year and 100-year events are 5.99 cfs and 43.98 cfs respectively. Refer to the **Appendix** for the Existing Conditions Drainage Map.

Sub-Basin OS-A1
The off-site sub-basin consists of an area of 4.06 acres, located in the western central portion of the drainage study area. Drainage flows overland from the northeast to southwest where it is captured by an existing drainage culvert at DP 14 and directed west of Elbert Road. The weighted

imperviousness for this sub-basin is 19%. Runoff during the 5-year and 100-year events are 3.62 cfs and 12.02 cfs respectively. Refer to the **Appendix** for the Existing Conditions Drainage Map.

Sub-Basin OS-A2

The off-site sub-basin consists of an area of 4.45 acres, located in the central portion of the drainage study area. Drainage flows overland from the north to south where it enters sub-basin A2 at DP 15 and follows the patterns described in sub-basin A2. The weighted imperviousness for this sub-basin is 7%. Runoff during the 5-year and 100-year events are 2.10 cfs and 11.46 cfs respectively. Refer to the **Appendix** for the Existing Conditions Drainage Map.

PROPOSED SUB-BASIN DESCRIPTIONS

For the proposed condition, stormwater will generally maintain historic flow patterns. The proposed roadways will alter some of the existing flow paths. The roadway ditches will capture runoff from the roadways and direct flows via proposed culverts back to the existing flow paths, which will ultimately follow historic patterns or be capture by one of the three (3) proposed storm water ponds. The proposed Site has been divided into 10 onsite basins A1-A2, B1-B3, B6-B8, and 2 offsite basins OS-A1 and OS-A2. Descriptions of each individual sub-basin can be found below. The off-site basins are fully developed and no changes to the upstream basins are anticipated. Per Final Drainage Report for Apex Ranch Estates by Terra Nova Engineering, dated September 3, 2008, the existing extended detention basin on the northwest corner of Apex Ranch Road and Fletcherville Lane was designed and [illegible] A-J of the Apex Ranch Estates Final Draina[illegible] roadway extensions through the ROW preservation within the Apex Ranch Estates Subdivision. This project does not rely on the water quality [illegible] detention basin within Apex Ranch Estates.

RESPONSIBILITY FOR MAINTAINING CHANNEL HAS BEEN ADDED TO TEXT

please identify who will be responsible for maintaining the channels especially those with erosion protection.

In the proposed conditions flows within the prop[illegible] natural drainage channels. These channels can be found on the proposed conditions drainage map, and hydraulic analysis of these channels in proposed conditions have been completed. Both of these items can be found in the **Appendix**. Flows will generally follow historic drainage patterns with regards to the existing natural drainage channels. Due to the increase in site imperviousness some channels will see an increase in flows. All channels that have an increase of flows in proposed conditions currently have capacity to accept the additional flows. Hydraulic analysis was done to determine need for erosion control measures. Any channel with a proposed velocity greater than 5.0 ft/s shall have Turf Reinforcement Mat (TRM) added as a channel stabilization mitigation measure. Details regarding channel velocity and TRM can be found in the **Appendix**.

There are several drainage culverts proposed within Filing 1 of the Site. Locations of the proposed culverts were chosen to ensure historic drainage patterns are maintained. Culvert sizing including outlet protection analysis has been included in this report. Outlet protection will be installed with the culverts as part of the early grading portion of this development. Due to the steep topography of the Site, instead of a traditional riprap pad for outlet protection, a low tailwater basin design is being proposed. Intended to prevent scour downstream by providing a stilling basin, the low tailwater basin acts as an additional energy dissipation mechanism by having a determined depth to the riprap pad that slows down the water prior to overtopping. The detail is provided in the **Appendix** of this report.

The three proposed full spectrum extended detention basins (EDB) will be designed to release developed flows from Filing No. 1 at less than or equal to historic rates for this project before passing the property line. The full design of these full spectrum extended detention basins are provided in this Final Drainage Report. Erosion control measures are shown for pond outfall to

protect downstream properties and drainageways, a low tailwater stilling basin, based on the design provided by Mile High Flood District (MHFD), Urban Drainage and Flood Control District Drainage Criteria Manuals (UDFCDCM) Volume 2, Figure 9-37, will be installed at the outfall location of the proposed EDBs. The design helps prevent downstream scour and mitigates the concentrated flow, acting as a level spreader for concentrated flow in an existing drainageway. These measures are displayed and discussed in text and drainage maps. More detail regarding the proposed EDBs can be found in the detention basin section of this report.

Sub-Basin A1

This on-site sub-basin consists of an area of 19.55 acres, located in the southwest corner of the Site. Drainage flows overland from the northeast to the southwest where it is captured by an existing 36" CMP culvert at DP 1 and outfalls west of Elbert Rd. There are no proposed improvements in sub-basin A1. The weighted imperviousness for this sub-basin is 15%. Runoff during the 5-year and 100-year events are 10.41 cfs and 41.24 cfs respectively. Due to the slight increase in sub-basin imperviousness, the 100-yr runoff increases from 38.41 to 41.24 cfs. The additional runoff will be accepted and mitigated through the nearly 1500 ft long, 50 ft wide existing drainage channel located within the sub-basin. Refer to the **Appendix** for the Proposed Conditions Drainage Map.

Sub-Basin A2

This on-site sub-basin consists of an area of 61.98 acres, located in the southwest corner of the Site. Improvements within this sub-basin include proposed roads, roadside ditches, culverts, and proposed private full spectrum detention basin A2. Drainage flows overland from the northeast to the southwest where it flows into proposed roadside ditches, is conveyed through proposed stormwater culverts, and is ultimately captured by propose private full spectrum detention basin A2. Flows will be released at or below historic levels to the existing roadside ditch along Elbert Road located at DP 2. Flows will generally follow historic drainage patterns. The weighted imperviousness for this sub-basin is 10%. Runoff during the 5-year and 100-year events are 20.85 cfs and 97.07 cfs respectively. Due to the increase in sub-basin imperviousness, the 100-yr runoff for DP 2 is anticipated to increases from 91.03 cfs to 97.07 cfs. The additional runoff will be collected and released at less than historic rates via a proposed private full spectrum detention basin. Flows from this basin will not be released into the Reata subdivision south of the Site. They will be routed through an outfall pipe that will release into the roadside ditch within the County ROW. A downstream channel analysis of this roadside ditch will be provided in the Final Drainage Report, associated with the Final Plat. The minor increase in flows will be mitigated by the proposed full spectrum detention basin A2 and released a less than historic rates. Refer to the **Appendix** for the Proposed Conditions Drainage Map.

this is the final drainage report. Please revise and provide analysis

Sub-Basin B1

This on-site sub-basin consists of an area of 38.38 acres, located in the south central portion of the Site. Improvements within this sub-basin include proposed roads, roadside ditches, culverts, and proposed private full spectrum detention basin B1. Drainage flows overland from the northeast to the south where it flows into proposed roadside ditches, is conveyed through proposed stormwater culverts, and is ultimately captured by propose private full spectrum detention basin B1 at DP 3. The weighted imperviousness for this sub-basin is 10%. Runoff during the 5-year and 100-year events are 16.38 cfs and 76.45 cfs respectively. Due to the increase in sub-basin imperviousness, the 100-yr runoff for DP 3 is anticipated to increases from 68.56 cfs to 76.45 cfs. The additional runoff will be collected and released at less than historic rates via a proposed private full spectrum detention basin with a proposed low tailwater basin. Flows from this basin will exit into the Reata subdivision south of the Site via existing, vegetated natural drainage channels and outfall to an existing stock pond within the adjacent property south of the Site. To

NOTED. TEXT UPDATED AND ANALYSIS ADDED.

mitigate erosion and downstream impacts, a low tailwater basin is proposed at the outfall prior to flows entering the Reata Subdivision. The minor increase in flows will be mitigated by the proposed full spectrum detention basin B1 and released at less than historic rates. Refer to the **Appendix** for the Proposed Conditions Drainage Map.

Sub-Basin B2

This on-site sub-basin consists of an area of 15.81 acres, located in the south-central portion of the Site. Drainage flows overland from the north to the south where it flows offsite at DP 4. Improvements within this sub-basin include proposed public roads. This sub-basin includes an approx. 14,351 sq ft improved area of roadway that will not be receiving water quality treatment. A detailed discussion regarding water quality treatment has been included in Step-2 of the Four Step Process. The weighted imperviousness for this sub-basin is 8%. Runoff during the 5-year and 100-year events are 7.46 cfs and 37.85 cfs respectively. It is anticipated in a 100-yr storm event the total runoff for DP 4 will reduce from 69.09 cfs to 37.85 cfs, as the proposed roadway will cut off much of the upstream portion of the existing drainage basin and route those flows to a proposed full spectrum detention basin. As such there are no anticipated downstream impacts. Refer to the **Appendix** for the Proposed Conditions Drainage Map.

Sub-Basin B3

This on-site sub-basin consists of an area of 19.11 acres, located in the southeastern portion of the Site. Drainage flows overland from the northwest to southeast where it flows off site at DP 5. There are no proposed public improvements within this sub-basin, but single-family homes will be constructed and excluded the large lot exclusion I.7.1.B.5 and discussed in step 2 of the four-step process. The weighted imperviousness for this sub-basin is 7%. Runoff during the 5-year and 100-year events are 7.83 cfs and 42.71 cfs respectively. In the proposed conditions, it is anticipated in a 100-yr storm event the total runoff for DP 5A (DP 5 in proposed conditions) will reduce from 43.98 to 42.71, as such there are no anticipated downstream impacts. Refer to the **Appendix** for the Proposed Conditions Drainage Map.

Sub-Basin B6

This on-site sub-basin consists of an area of 52.15 acres, located in the central portion of the Site. Improvements within this sub-basin include proposed roads, roadside ditches, and culverts. Drainage flows overland from the northeast to the southwest where it flows into proposed roadside ditches, is conveyed through a proposed stormwater culvert at DP 8, and into sub-basin B8. From there, flows will follow path as described in sub-basin B8 where it will ultimately be captured in proposed full spectrum detention basin B8. The weighted imperviousness for this sub-basin is 11%. Runoff during the 5-year and 100-year events are 23.44 cfs and 106.32 cfs respectively. Refer to the **Appendix** for the Proposed Conditions Drainage Map.

Sub-Basin B7

This on-site sub-basin consists of an area of 2.46 acres, located in the southern portion of the Site. Drainage flows overland from the north to south where it flows off site at DP 9. There are no proposed improvements within this sub-basin. The weighted imperviousness for this sub-basin is 7%. Runoff during the 5-year and 100-year events are 1.13 cfs and 6.17 cfs respectively. Refer to the **Appendix** for the Proposed Conditions Drainage Map.

Sub-Basin B8

This on-site sub-basin consists of an area of 9.52 acres, located in the southern portion of the Site. Drainage flows overland from the north to south where it is captured by proposed private full spectrum extended detention basin B8 at DP 10. It should be noted that sub-basin B8 accepts flows from sub-basin B6 at DP 8. Refer to sub-basin B6 for information regarding the proposed flows from sub-basin B6. Aside from the proposed extended detention basin there are no

proposed improvements within this sub-basin. The weighted imperviousness for this sub-basin is 7%. Runoff during the 5-year and 100-year events are 4.22 cfs and 23.05 cfs respectively. In addition to the increase of imperviousness, sub-basin B8 is also accepting flows from sub-basin B6 to the north. The combination of these factors results in a proposed increase of flows at DP 10 (DP 5 in existing conditions) from 43.40 cfs to 130.00 cfs. The additional runoff will be collected and released at less than historic rates via a proposed private full spectrum detention basin. To mitigate erosion and downstream impacts, a low tailwater basin is proposed at the outfall prior to flows entering the Reata Subdivision. Flows from this basin will exit into the Reata subdivision south of the Site via existing, vegetated natural drainage channel and outfall to an existing established vegetated area within the adjacent property south of the Site. The increase in flows will be mitigated by the proposed full spectrum detention basin B8 and released a less than historic rates. Refer to the **Appendix** for the Proposed Conditions Drainage Map.

Sub-Basin OS-A1
The off-site sub-basin consists of an area of 4.06 acres, located in the western central portion of the drainage study area. Drainage flows overland from the northeast to southwest where it is captured by an existing drainage culvert at DP 18 and directed west of Elbert Road. The weighted imperviousness for this sub-basin is 25%. Runoff during the 5-year and 100-year events are 4.12 cfs and 12.86 cfs respectively. Refer to the **Appendix** for the Proposed Conditions Drainage Map.

Sub-Basin OS-A2
The off-site sub-basin consists of an area of 3.14 acres, located in the central portion of the drainage study area. Drainage flows overland from the north to south where it enters sub-basin A2 at DP 19 and follows the patterns described in sub-basin A2. The weighted imperviousness for this sub-basin is 7%. Runoff during the 5-year and 100-year events are 2.10 cfs and 11.46 cfs respectively. Refer to the **Appendix** for the Proposed Conditions Drainage Map.

Sub-Basin OS-A3
The off-site sub-basin consists of an area of 1.31 acres, located in the central portion of the drainage study area. Drainage flows overland from east to west where it enters into the proposed roadside ditch at DP 20 and follows the roadside ditches within Apex Ranch Subdivision, where is eventually routed into the existing detention basin. The weighted imperviousness for this sub-basin is 13%. Runoff during the 5-year and 100-year events are 0.87 cfs and 3.65 cfs respectively. Refer to the **Appendix** for the Proposed Conditions Drainage Map.

Design Point 2
Design Point 2 is located on the southwest corner of Sub-basin A2 and is at the outfall of proposed Full Spectrum Detention Pond A2 in the final condition. The outfall structure is designed to release flows from the EDB at less than or equal to historic rates. See **Appendix** for outlet structure design. In an effort to prevent erosion, a low tailwater stilling basin has been proposed to act as an energy dissipation mechanism. The low tailwater stilling basin will outfall to the existing roadside ditch within the Elbert Road ROW. Onsite observation and measurements show the existing roadside ditch has capacity with a minimum of 1 ft freeboard. A downstream analysis of this roadside ditch is provided in the **Appendix** The roadside ditch travels approx. 1800 ft south along the east side of Elbert Rd where it enters an approximate 70 ft wide drainage channel. Due to the size of the downstream channel and the distance from the pond outfall, any change in flow into the drainage channel would be negligible. A table summarizing the existing historic flows and proposed flows in the final condition for the 100-year event, at Design Point 2 are presented here below.

Project Phase	Existing Rational Method Peak Inflow 100-YR (cfs)	Detained Outflow - 100 YR (cfs)	Notes
Final Condition	91.03	64.40	Outlet structure designed to regulate flows at less than historic

In the final conditions, the EDB will limit the peak flow at design point 2 to be less than the historic condition.

Design Point 3

Design Point 3 is located on the southern property edge, near the center of the Site, in the center of Subbasin B1 and is at the outfall of proposed Full Spectrum Detention Pond B1 in the final condition. The outfall structure is designed to release flows from the EDB at less than or equal to historic rates. See **Appendix** for outlet structure design. In an effort to prevent erosion, a low tailwater stilling basin has been proposed to act as an energy dissipation mechanism. The low tailwater stilling basin will outfall to the existing historical drainageway. A table summarizing the existing historic flows and proposed flows in the interim and final condition for the 100-year event, at Design Point 3 are presented here.

Project Phase	Existing Rational Method Peak Inflow 100-YR (cfs)	Detained Outflow -100 YR (cfs)	Notes
Final Condition	68.56	42.40	Outlet structure will be constructed to regulate flows at less that

In the final conditions, the EDB will limit the peak flow at design point 3 to be less than the historic condition.

Design Point 10

Design Point 10 is located on the southeast portion of the Site, in the center of Subbasin B8 and is at the outfall of proposed Full Spectrum Detention Pond B8 in the final condition. The outfall structure is designed to release flows from the EDB at less than or equal to historic rates. In an effort to prevent erosion, a low tailwater stilling basin has been proposed to act as an energy dissipation mechanism. The low tailwater stilling basin will outfall to the existing historical drainageway. A table summarizing the existing historic flows and proposed flows in the interim and final condition for the 100-year event, at Design Point 10 are presented here.

Project Phase	Existing Rational Method Peak Inflow 100-YR (cfs)	Detained Outflow -100 YR (cfs)	Notes
Final Condition	43.40	39.40	Outlet structure will be constructed to regulate flows at less that

In the final conditions, the EDB will limit the peak flow at design point 3 to be less than the historic condition.

DRAINAGE DESIGN CRITERIA

DEVELOPMENT CRITERIA REFERENCE

The proposed storm facilities are designed to be in compliance with El Paso County "Drainage Criteria Manual (DCM)" dated October 2018 ("the MANUAL"), El Paso County "Engineering Criteria Manual" ("the Engineering Manual"), Chapter 6 and Section 3.2.1 of Chapter 13 of the City of Colorado Springs Drainage Criteria Manual dated May 2014 ("the Colorado Springs MANUAL"), and Mile High Flood District (MHFD), Urban Drainage and Flood Control District Drainage Criteria Manuals (UDFCDCM), (Volumes 1, 2 and 3), prepared by Wright-McLaughlin Engineers, June 2001, with latest revisions.

Site drainage is not significantly impacted by such constraints as utilities or existing development.

A Preliminary Drainage Report was completed for the overall Overlook Subdivision (SP238). This Final Drainage Report uses the Preliminary Drainage Report to assist with the drainage design for Filing No. 1.

HYDROLOGIC CRITERIA

The 5-year and 100-year design storm events were used in determining rainfall and runoff for the proposed drainage system per chapter 6 of the CRITERIA. Table 6-2 of the CRITERIA is the source for rainfall data for the 5-year and 100-year design storm events. Design runoff was calculated using the Rational Method for developed conditions as established in the CRITERIA and MANUAL. Runoff coefficients for the proposed development were determined using Table 6-6 of the CRITERIA by calculating weighted impervious values for each specific site basin as outlined and shown in the Preliminary Drainage Report.

HYDRAULIC CRITERIA

Applicable design methods were utilized to analyze & size the proposed ponds, culverts, and existing drainage channels which includes the [illegible], rational calculations spreadsheet, and FlowMaster, and U[illegible]

STATEMENT REGARDING DITCHES COMPILIED WITH DCMV1 HAS BEEN ADDED TO REPORT

Proposed Drainage features on-site have been a[illegible]ign storm events:

- Major Storm: 100-year Storm Event

Please indicate whether the roadside ditches comply with table 6-1 of the DCMV1

The existing natural drainage channels and proposed roadside ditches are designed to carry flows to the proposed EDBs. The natural channels have varying bottom widths, slopes, and side slopes. The Project intends on using existing natural drainage channels to convey flow where appropriate. Natural channels through Filing No. 1 have been labeled and identified on the Existing and Proposed Drainage Maps. Channel calculations and summary table have been provided in the **Appendix.** It is not anticipated channel upgrades or improvements will be required for this project. Proposed drainage easements have been proposed in locations where the natural channels convey a substantial amount of flow between properties.

Roadside ditches are [illegible] route flows to the proposed culverts. The roadside [illegible]t flow. The roadside ditches have been designed to have an average depth of 3 feet, a v-ditch, a left-side slope of 3:1, and a

NOTED. TEXT HAS BEEN UPDATED TO ACCURATLY REFLECT CDs AND GRADING

the cross sections in the CD's indicate 4:1 on each side slope. Revise accordingly.

right-side slope of 4:1. Roadside ditch calculations and summary table has been provided in the **Appendix**.

Culverts OWNERSHIP AD MAINTENACNE OF PONDS NOW DISCUSSED IN TEXT. and roads. T nd ha year storm event. Culvert calculations and summary table h

DISCUSSION REGARDING OVERRIDDEN WQCV HAS BEEN ADDED TO TEXT. WQCV VALUES REPRESENT THE NON-EXEMPT/EXCLUDED AREAS REQUIRING TREATEMENT.

identify who will maintain and own the ponds

Discuss how these were calculated and why these values were overridden in the spreadsheet

DETENTION

Three full spectrum proposed in order to maintain historic flows and water quality. Mile High Flood District UD-Detention Spreadsheet was utilized to design the pond outlet structures. Detailed pond and outlet structure design can be found in the **Appendix**. A pond summary table can be found below.

Pond	Contributing Basins	Total Contributing Basin Area (Acre)	WQCV (Ac-ft)	Total Volume Required (Ac-ft)	Total Volume Provided (Ac-ft)	100-YR Pond Outfall (CFS)
A2	A2	61.98	0.093	2.287	4.610	64.40
B1	B1	38.38	0.048	1.503	2.868	42.45
B8	B6+B8	67.96	0.069	2.207	4.741	39.40

THE FOUR STEP PROCESS

The Project was designed in accordance with the four-step process to minimize adverse impacts of urbanization, as outlined in the El Paso County Engineering Manual for BMP selection as noted below:

Step 1. **Employ Runoff Reduction Practices** – The project is proposing a low-density residential development that will be designed to minimize the impact to the current existing terrain. Per Section I.7.1B of Appendix I of the ECM, the single-family residences fall under the large lot exemption as the total impervious area is less than 10% of the area. Homes are typically placed in the center of the lot and provide long distances for infiltration across natural terrain. The Site's proposed paved roadways will increase the Site's impervious area; however, roadside ditches and channels will be constructed to slow down the runoff velocity and reduce runoff peaks. The three proposed detention ponds will be used to capture stormwater, provide water quality treatment, and maintain flows discharging off site at or below historic levels.

Step 2. Provide a Water Quality Capture Volume – Permanent water quality measures and detention facilities will be necessary for the Project. Three (3) Full Spectrum Extended Detention Basins will treat the areas not excluded with either the Large Lot or 20% exclusion. Per ECM Appendix I Section I.7.B.5: Large Lot Single Family exclusion, most of the proposed site will be excluded from water quality, lot imperviousness shall be limited to 10 percent or less. Per ECM Appendix I Section 1.7.C.1.a., 20% of the development site or less than 1 acre can be excluded from providing water quality. As mentioned, 0.99 acres (43,197 sq ft) of impervious area will not be able to be treated which is less than 20% of the overall site.

Step 3 Stabilize Drainageways– Stabilizing proposed roadside ditches, and channels by designing them with slopes that control the flow rates. Placement of riprap upstream and downstream of culverts to help reduce erosion of the roadside ditches. Additionally, low tailwater stilling basins will be constructed in the place of traditional riprap outlet protection. The design helps prevent downstream scour and mitigates the concentrated flow, acting as a level spreader for concentrated flow in an existing drainageway. Existing drainage ways will be graded to reduce the velocity of the water to minimize erosion. The existing natural channels have been analyzed for width and velocity for the 100-yr storm event. Easements are proposed to accommodate the full width of the major storm event.

Step 4. Implement Site Specific and Other Source Control BMPs – The erosion control construction BMPs of the Project were designed to reduce contamination. Source control BMPs include the use of vehicle tracking control, culvert protection, stockpile management, and stabilized staging areas.

DRAINAGE FACILITY DESIGN

GENERAL CONCEPT

The proposed drainage patterns will match the historic patterns. To maintain historic flows, three full spectrum detention ponds are being proposed and will capture and control the flows from the proposed development at less than or equal to historic rates.

WQCV EXCLUSION AREAS

Areas within the site do not have water quality provide
1.7.C.A, 20% of the development site or less than 1 a
quality. The combined exclusion areas for Phase 1 su
locations are provided in the **Appendix.**

DIVEWAY CULVERT TABLE ADDED TO REPORT. AS IT IS UNCERTAIN WHERE FUTURE DRIVEWAYS WOULD CROSS ANY POTENTIAL DRAINAGE CHANNELS. THAT DESIGN WOULD NEED TO HAPPEN AT THE TIME OF CONSTRUCTION.

DRIVEWAY CULVERTS

Culverts were analyzed and sized for driveway crossings at each ditch crossing from the roadways. Refer to **Appendix** for the driveway culvert calculations.

provide table with culvert driveway sizing as many of these ditches have large flows. Additionally, provide culvert sizes for lots that have drainage easements that will be crossed by driveways (example lot 34)

DRAINAGE FEES

FEES

The project is within the Upper Black Squirrel Drainage Basin (CHBS2000), La
Drainage Basin (CHBR0400), East Kiowa Creek Drainage Basin (KIKI0400), a
Drainage Basin (BIBI0200) all four of which are not part of the El Paso County
Fee Program. As such, no drainage fees are due with this Project.

SUMMARY

This report has been prepared in accordance with El Paso County stormwater criteria. It outlines the Site design for the 5-year and 100-year storm events drainage system. The drainage design presented within this report conforms to the criteria presented in the MANUAL. Additionally, as the proposed temporary sediment basin release rates are to be designed less than historic rates, the Site runoff and storm drain facilities will not adversely affect the downstream and surrounding developments.

REFERENCES

1. Final Drainage Report for Apex Ranch Estates by Terra Nova Engineering, Inc. dated September 3, 2008

2. El Paso County “Engineering Criteria Manual” Volumes 1 & 2, dated October 31, 2018

3. Natural Resources Conservation Service, Web Soil Survey, dated June 21, 2023.

4. Urban Drainage and Flood Control District Drainage Criteria Manuals (UDFCDCM), (Volumes 1, 2 and 3), prepared by Wright-McLaughlin Engineers, June 2001, with latest revisions.

5. Flood Insurance Rate Map, El Paso County, Colorado and Incorporated Areas, Map Number 08041C0350G, Effective Date December 7, 2018, prepared by the Federal Emergency Management Agency (FEMA).

Please include preliminary and early grading projects' No., preparer, and approved date.

REFERENCES UPDATED TO INCLUDED PRELIMINARY AND EARLY GRADING REPORTS.

APPENDIX

APPENDIX A: VICINITY MAP

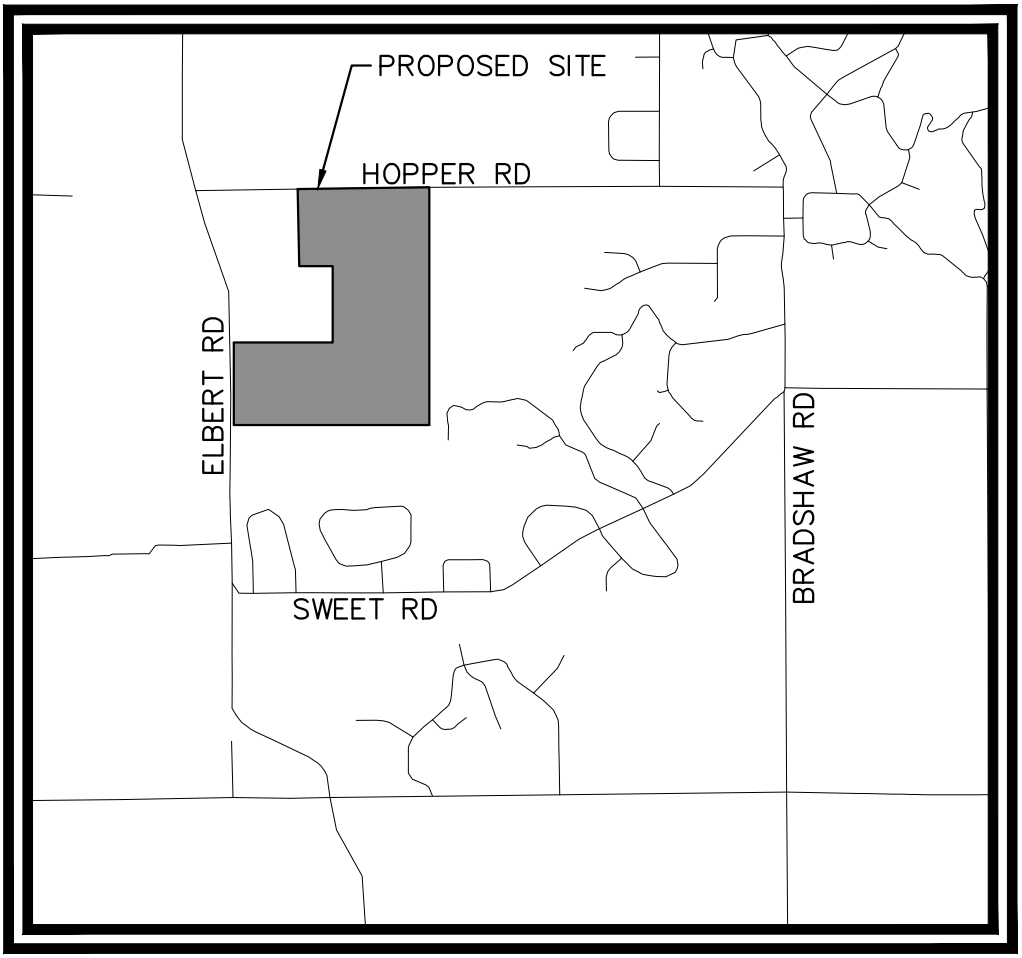

VICINITY MAP

SCALE: 1":5000'

APPENDIX B: FEMA MAP & SOILS REPORT

NOTES TO USERS

This map is for use in administering the National Flood Insurance Program. It does not necessarily identify all areas subject to flooding, particularly from local drainage sources of small size. The **community map repository** should be consulted for possible updated or additional flood hazard information.

To obtain more detailed information in areas where **Base Flood Elevations** (BFEs) and/or **floodways** have been determined, users are encouraged to consult the Flood Profiles and Floodway Data and/or Summary of Stillwater Elevations tables contained within the Flood Insurance Study (FIS) report that accompanies this FIRM. Users should be aware that BFEs shown on the FIRM represent rounded whole-foot elevations. These BFEs are intended for flood insurance rating purposes only and should not be used as the sole source of flood elevation information. Accordingly, flood elevation data presented in the FIS report should be utilized in conjunction with the FIRM for purposes of construction and/or floodplain management.

Coastal Base Flood Elevations shown on this map apply only landward of 0.0' North American Vertical Datum of 1988 (NAVD88). Users of this FIRM should be aware that coastal flood elevations are also provided in the Summary of Stillwater Elevations table in the Flood Insurance Study report for this jurisdiction. Elevations shown in the Summary of Stillwater Elevations table should be used for construction and/or floodplain management purposes when they are higher than the elevations shown on this FIRM.

Boundaries of the **floodways** were computed at cross sections and interpolated between cross sections. The floodways were based on hydraulic considerations with regard to requirements of the National Flood Insurance Program. Floodway widths and other pertinent floodway data are provided in the Flood Insurance Study report for this jurisdiction.

Certain areas not in Special Flood Hazard Areas may be protected by **flood control structures**. Refer to section 2.4 "Flood Protection Measures" of the Flood Insurance Study report for information on flood control structures for this jurisdiction.

The **projection** used in the preparation of this map was Universal Transverse Mercator (UTM) zone 13. The **horizontal datum** was NAD83, GRS80 spheroid. Differences in datum, spheroid, projection or UTM zones zones used in the production of FIRMs for adjacent jurisdictions may result in slight positional differences in map features across jurisdiction boundaries. These differences do not affect the accuracy of this FIRM.

Flood elevations on this map are referenced to the **North American Vertical Datum of 1988 (NAVD88)**. These flood elevations must be compared to structure and ground elevations referenced to the same **vertical datum**. For information regarding conversion between the National Geodetic Vertical Datum of 1929 and the North American Vertical Datum of 1988, visit the National Geodetic Survey website at http://www.ngs.noaa.gov/ or contact the National Geodetic Survey at the following address:

NGS Information Services
NOAA, N/NGS12
National Geodetic Survey
SSMC-3, #9202
1315 East-West Highway
Silver Spring, MD 20910-3282

To obtain current elevation, description, and/or location information for **bench marks** shown on this map, please contact the Information Services Branch of the National Geodetic Survey at (301) 713-3242 or visit its website at http://www.ngs.noaa.gov/.

Base Map information shown on this FIRM was provided in digital format by El Paso County, Colorado Springs Utilities, City of Fountain, Bureau of Land Management, National Oceanic and Atmospheric Administration, United States Geological Survey, and Anderson Consulting Engineers, Inc. These data are current as of 2006.

This map reflects more detailed and up-to-date **stream channel configurations and floodplain delineations** than those shown on the previous FIRM for this jurisdiction. The floodplains and floodways that were transferred from the previous FIRM may have been adjusted to conform to these new stream channel configurations. As a result, the Flood Profiles and Floodway Data tables in the Flood Insurance Study Report (which contains authoritative hydraulic data) may reflect stream channel distances that differ from what is shown on this map. The profile baselines depicted on this map represent the hydraulic modeling baselines that match the flood profiles and Floodway Data Tables if applicable, in the FIS report. As a result, the profile baselines may deviate significantly from the new base map channel representation and may appear outside of the floodplain.

Corporate limits shown on this map are based on the best data available at the time of publication. Because changes due to annexations or de-annexations may have occurred after this map was published, map users should contact appropriate community officials to verify current corporate limit locations.

Please refer to the separately printed **Map Index** for an overview map of the county showing the layout of map panels; community map repository addresses; and a Listing of Communities table containing National Flood Insurance Program dates for each community as well as a listing of the panels on which each community is located.

Contact **FEMA Map Service Center** (MSC) via the FEMA Map Information eXchange (FMIX) 1-877-336-2627 for information on available products associated with this FIRM. Available products may include previously issued Letters of Map Change, a Flood Insurance Study Report, and/or digital versions of this map. The MSC may also be reached by Fax at 1-800-358-9620 and its website at http://www.msc.fema.gov/.

If you have **questions about this map** or questions concerning the National Flood Insurance Program in general, please call **1-877-FEMA MAP** (1-877-336-2627) or visit the FEMA website at http://www.fema.gov/business/nfip.

El Paso County Vertical Datum Offset Table

Flooding Source	Vertical Datum Offset (ft)
REFER TO SECTION 3.3 OF THE EL PASO COUNTY FLOOD INSURANCE STUDY FOR STREAM BY STREAM VERTICAL DATUM CONVERSION INFORMATION	

Panel Location Map

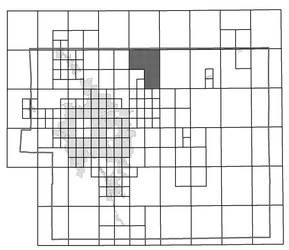

This Digital Flood Insurance Rate Map (DFIRM) was produced through a Cooperating Technical Partner (CTP) agreement between the State of Colorado Water Conservation Board (CWCB) and the Federal Emergency Management Agency (FEMA).

Additional Flood Hazard information and resources are available from local communities and the Colorado Water Conservation Board.

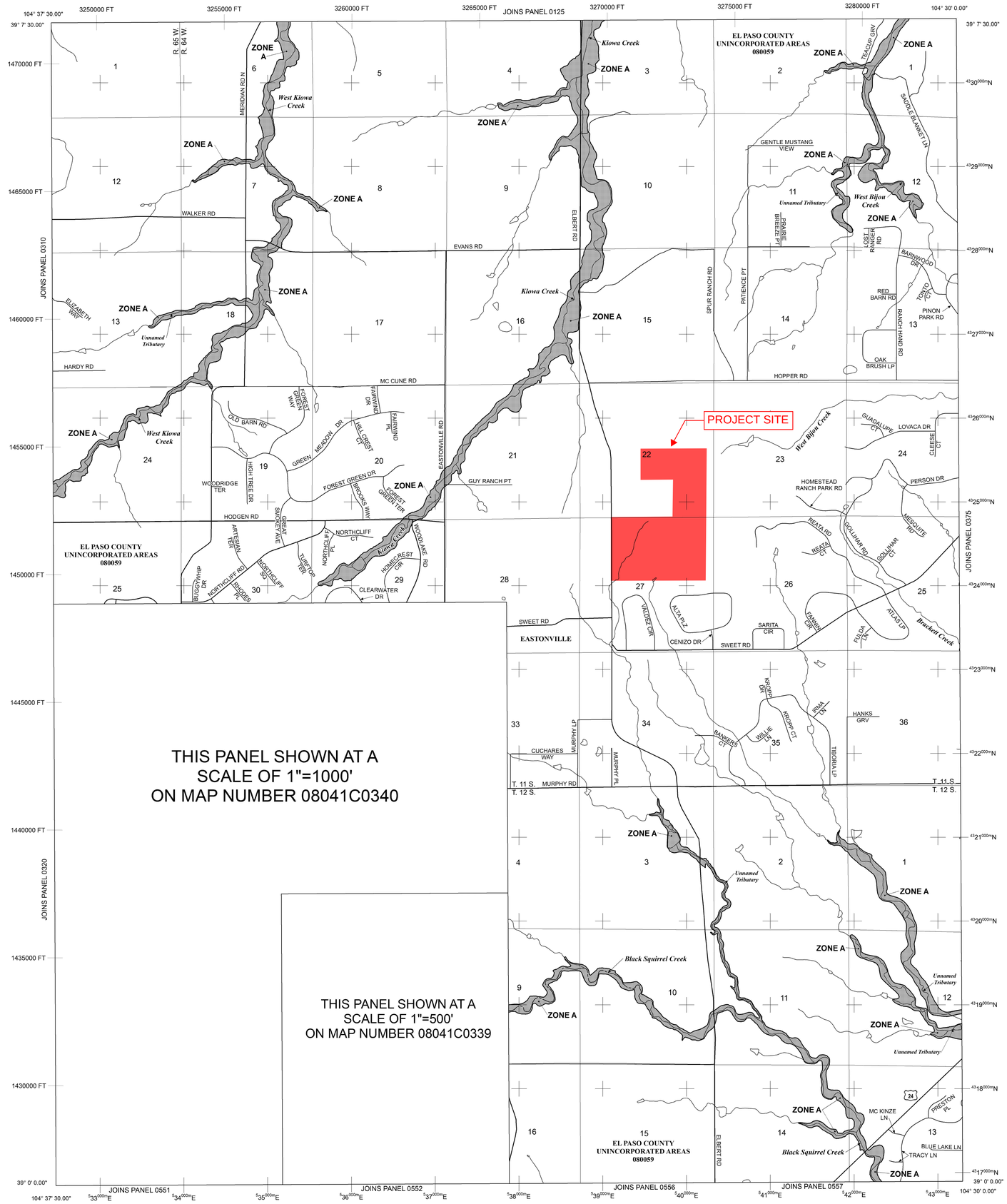

LEGEND

SPECIAL FLOOD HAZARD AREAS (SFHAS) SUBJECT TO INUNDATION BY THE 1% ANNUAL CHANCE FLOOD

The 1% annual chance flood (100-year flood), also known as the base flood, is the flood that has a 1% chance of being equaled or exceeded in any given year. The Special Flood Hazard Area is the area subject to flooding by the 1% annual chance flood. Areas of Special Flood Hazard include Zones A, AE, AH, AO, AR, A99, V, and VE. The Base Flood Elevation is the water-surface elevation of the 1% annual chance flood.

ZONE A	No Base Flood Elevations determined.
ZONE AE	Base Flood Elevations determined.
ZONE AH	Flood depths of 1 to 3 feet (usually areas of ponding); Base Flood Elevations determined.
ZONE AO	Flood depths of 1 to 3 feet (usually sheet flow on sloping terrain); average depths determined. For areas of alluvial fan flooding, velocities also determined.
ZONE AR	Special Flood Hazard Area Formerly protected from the 1% annual chance flood by a flood control system that was subsequently decertified. Zone AR indicates that the former flood control system is being restored to provide protection from the 1% annual chance or greater flood.
ZONE A99	Area to be protected from 1% annual chance flood by a Federal flood protection system under construction; no Base Flood Elevations determined.
ZONE V	Coastal flood zone with velocity hazard (wave action); no Base Flood Elevations determined.
ZONE VE	Coastal flood zone with velocity hazard (wave action); Base Flood Elevations determined.

FLOODWAY AREAS IN ZONE AE

The floodway is the channel of a stream plus any adjacent floodplain areas that must be kept free of encroachment so that the 1% annual chance flood can be carried without substantial increases in flood heights.

OTHER FLOOD AREAS

ZONE X	Areas of 0.2% annual chance flood; areas of 1% annual chance flood with average depths of less than 1 foot or with drainage areas less than 1 square mile; and areas protected by levees from 1% annual chance flood.

OTHER AREAS

ZONE X	Areas determined to be outside the 0.2% annual chance floodplain.
ZONE D	Areas in which flood hazards are undetermined, but possible.

COASTAL BARRIER RESOURCES SYSTEM (CBRS) AREAS

OTHERWISE PROTECTED AREAS (OPAs)

CBRS areas and OPAs are normally located within or adjacent to Special Flood Hazard Areas.

	Floodplain boundary
	Floodway boundary
	Zone D Boundary
	CBRS and OPA boundary
	Boundary dividing Special Flood Hazard Areas of different Base Flood Elevations, flood depths or flood velocities.
513	Base Flood Elevation line and value; elevation in feet*
(EL 987)	Base Flood Elevation value where uniform within zone; elevation in feet*

* Referenced to the North American Vertical Datum of 1988 (NAVD 88)

A — A	Cross section line
23 - - - - 23	Transect line
97° 07' 30.00" 32° 22' 30.00"	Geographic coordinates referenced to the North American Datum of 1983 (NAD 83)
4275000mN	1000-meter Universal Transverse Mercator grid ticks, zone 13
6000000 FT	5000-foot grid ticks: Colorado State Plane coordinate system, central zone (FIPSZONE 0502), Lambert Conformal Conic Projection
DX5510 ×	Bench mark (see explanation in Notes to Users section of this FIRM panel)
• M1.5	River Mile

MAP REPOSITORIES
Refer to Map Repositories list on Map Index

EFFECTIVE DATE OF COUNTYWIDE
FLOOD INSURANCE RATE MAP
MARCH 17, 1997

EFFECTIVE DATE(S) OF REVISION(S) TO THIS PANEL
DECEMBER 7, 2018 - to update corporate limits, to change Base Flood Elevations and Special Flood Hazard Areas, to update map format, to add roads and road names, and to incorporate previously issued Letters of Map Revision.

For community map revision history prior to countywide mapping, refer to the Community Map History Table located in the Flood Insurance Study report for this jurisdiction.

To determine if flood insurance is available in this community, contact your insurance agent or call the National Flood Insurance Program at 1-800-638-6620.

MAP SCALE 1" = 2000'

1000 0 2000 4000 FEET

600 0 600 1200 METERS

NFIP

NATIONAL FLOOD INSURANCE PROGRAM

PANEL 0350G

FIRM
FLOOD INSURANCE RATE MAP
EL PASO COUNTY, COLORADO
AND INCORPORATED AREAS

PANEL 350 OF 1300

(SEE MAP INDEX FOR FIRM PANEL LAYOUT)

CONTAINS:

COMMUNITY	NUMBER	PANEL	SUFFIX
EL PASO COUNTY	080059	0350	G

Notice to User: The **Map Number** shown below should be used when placing map orders; the **Community Number** shown above should be used on insurance applications for the subject community.

MAP NUMBER
08041C0350G

MAP REVISED
DECEMBER 7, 2018

Federal Emergency Management Agency

Hydrologic Soil Group—El Paso County Area, Colorado

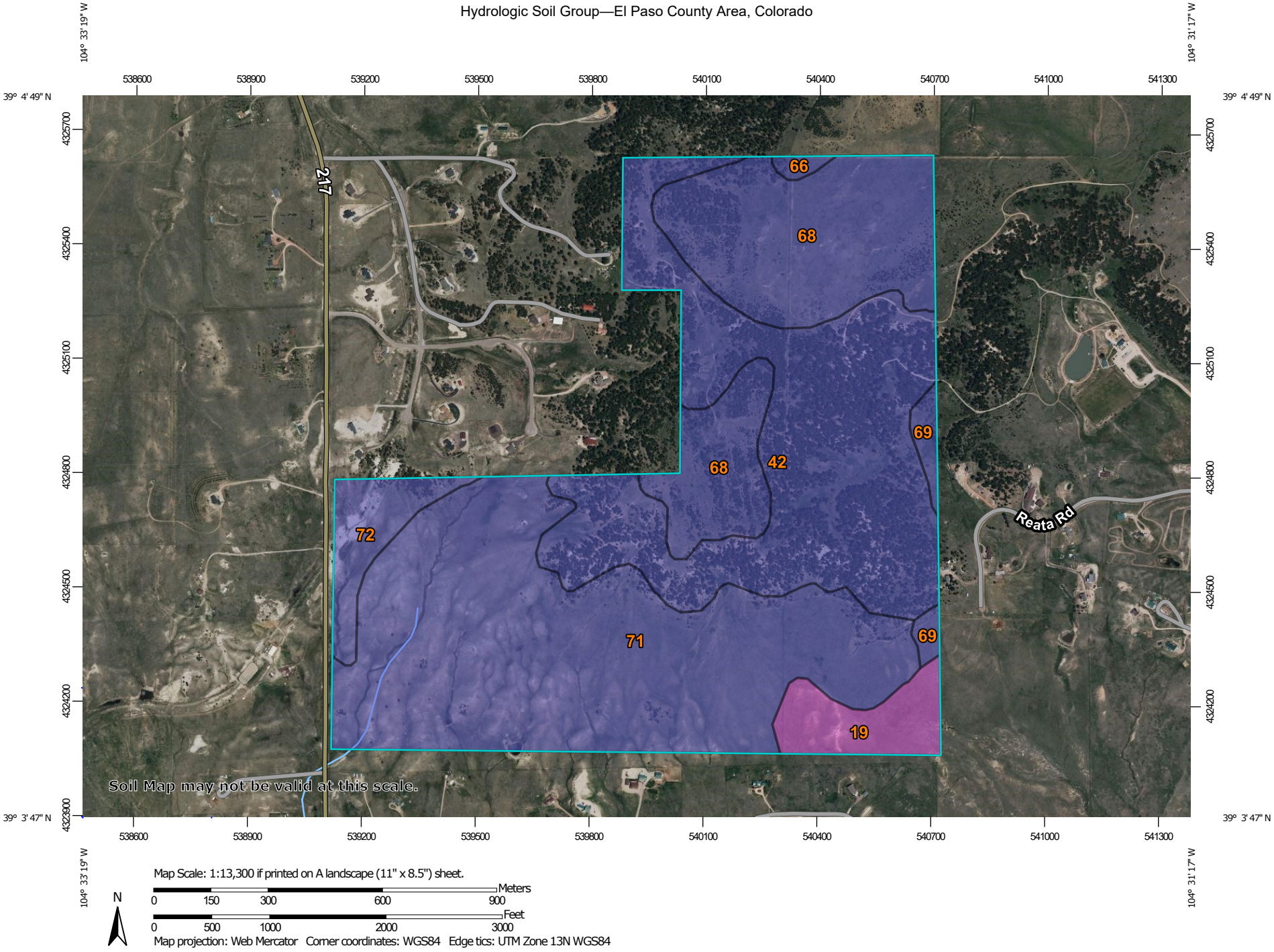

Map Scale: 1:13,300 if printed on A landscape (11" x 8.5") sheet.

N

Meters: 0 150 300 600 900

Feet: 0 500 1000 2000 3000

Map projection: Web Mercator Corner coordinates: WGS84 Edge tics: UTM Zone 13N WGS84

MAP LEGEND

Area of Interest (AOI)

Area of Interest (AOI)

Soils

Soil Rating Polygons

- A
- A/D
- B
- B/D
- C
- C/D
- D
- Not rated or not available

Soil Rating Lines

- A
- A/D
- B
- B/D
- C
- C/D
- D
- Not rated or not available

Soil Rating Points

- A
- A/D
- B
- B/D
- C
- C/D
- D
- Not rated or not available

Water Features

Streams and Canals

Transportation

- Rails
- Interstate Highways
- US Routes
- Major Roads
- Local Roads

Background

Aerial Photography

MAP INFORMATION

The soil surveys that comprise your AOI were mapped at 1:24,000.

Warning: Soil Map may not be valid at this scale.

Enlargement of maps beyond the scale of mapping can cause misunderstanding of the detail of mapping and accuracy of soil line placement. The maps do not show the small areas of contrasting soils that could have been shown at a more detailed scale.

Please rely on the bar scale on each map sheet for map measurements.

Source of Map: Natural Resources Conservation Service
Web Soil Survey URL:
Coordinate System: Web Mercator (EPSG:3857)

Maps from the Web Soil Survey are based on the Web Mercator projection, which preserves direction and shape but distorts distance and area. A projection that preserves area, such as the Albers equal-area conic projection, should be used if more accurate calculations of distance or area are required.

This product is generated from the USDA-NRCS certified data as of the version date(s) listed below.

Soil Survey Area: El Paso County Area, Colorado
Survey Area Data: Version 20, Sep 2, 2022

Soil map units are labeled (as space allows) for map scales 1:50,000 or larger.

Date(s) aerial images were photographed: Jun 9, 2021—Jun 12, 2021

The orthophoto or other base map on which the soil lines were compiled and digitized probably differs from the background imagery displayed on these maps. As a result, some minor shifting of map unit boundaries may be evident.

Hydrologic Soil Group

Map unit symbol	Map unit name	Rating	Acres in AOI	Percent of AOI
19	Columbine gravelly sandy loam, 0 to 3 percent slopes	A	18.1	4.1%
42	Kettle-Rock outcrop complex	B	135.4	30.8%
66	Peyton sandy loam, 1 to 5 percent slopes	B	1.7	0.4%
68	Peyton-Pring complex, 3 to 8 percent slopes	B	91.1	20.7%
69	Peyton-Pring complex, 8 to 15 percent slopes	B	5.6	1.3%
71	Pring coarse sandy loam, 3 to 8 percent slopes	B	171.8	39.0%
72	Pring coarse sandy loam, 8 to 15 percent slopes	B	16.2	3.7%
Totals for Area of Interest			**440.0**	**100.0%**

Description

Hydrologic soil groups are based on estimates of runoff potential. Soils are assigned to one of four groups according to the rate of water infiltration when the soils are not protected by vegetation, are thoroughly wet, and receive precipitation from long-duration storms.

The soils in the United States are assigned to four groups (A, B, C, and D) and three dual classes (A/D, B/D, and C/D). The groups are defined as follows:

Group A. Soils having a high infiltration rate (low runoff potential) when thoroughly wet. These consist mainly of deep, well drained to excessively drained sands or gravelly sands. These soils have a high rate of water transmission.

Group B. Soils having a moderate infiltration rate when thoroughly wet. These consist chiefly of moderately deep or deep, moderately well drained or well drained soils that have moderately fine texture to moderately coarse texture. These soils have a moderate rate of water transmission.

Group C. Soils having a slow infiltration rate when thoroughly wet. These consist chiefly of soils having a layer that impedes the downward movement of water or soils of moderately fine texture or fine texture. These soils have a slow rate of water transmission.

Group D. Soils having a very slow infiltration rate (high runoff potential) when thoroughly wet. These consist chiefly of clays that have a high shrink-swell potential, soils that have a high water table, soils that have a claypan or clay layer at or near the surface, and soils that are shallow over nearly impervious material. These soils have a very slow rate of water transmission.

If a soil is assigned to a dual hydrologic group (A/D, B/D, or C/D), the first letter is for drained areas and the second is for undrained areas. Only the soils that in their natural condition are in group D are assigned to dual classes.

Rating Options

Aggregation Method: Dominant Condition

Component Percent Cutoff: None Specified

Tie-break Rule: Higher

APPENDIX C: HYDROLOGY

Kimley»Horn

STANDARD FORM SF-1
RUNOFF COEFFICIENTS - IMPERVIOUS CALCULATION
EXISTING CONDITIONS

PROJECT NAME: Overlook
PROJECT NUMBER: 196239003
CALCULATED BY: GKS
CHECKED BY: KRK

DATE: 9/16/2024

SOIL: B

LAND USE:	RESIDENTIAL (>5AC) AREA	PASTURE/MEADOW (SOIL GROUP A/B) AREA	PAVEMENT AREA	AREA
2-YEAR COEFF.	0.05	0.02	0.89	
5-YEAR COEFF.	0.12	0.08	0.90	
10-YEAR COEFF.	0.20	0.15	0.92	
100-YEAR COEFF.	0.39	0.35	0.96	
IMPERVIOUS %	7%	0%	100%	

DESIGN BASIN	DESIGN POINT	RESIDENTIAL (>5AC) AREA (AC)	PASTURE/MEADOW (SOIL GROUP A/B) AREA (AC)	PAVEMENT AREA (AC)	AREA (AC)	TOTAL AREA (AC)	C(2)	C(5)	C(10)	C(100)	Imp %
FDR Basins											
A1	1		18.28	1.64		**19.92**	0.09	0.15	0.21	0.40	8%
A2	2		63.31	0.66		**63.97**	0.03	0.09	0.16	0.36	1%
B1	3		43.28			**43.28**	0.02	0.08	0.15	0.35	0%
B2	4		42.42			**42.42**	0.02	0.08	0.15	0.35	0%
B3	5		25.42			**25.42**	0.02	0.08	0.15	0.35	0%
B3A	5A		24.23			**24.23**	0.02	0.08	0.15	0.35	0%
OS-A1	14		3.29	0.77		**4.06**	0.19	0.24	0.30	0.47	19%
OS-A2	15	4.45				**4.45**	0.05	0.12	0.20	0.39	7%
TOTAL - OVERALL		**4.45**	**220.23**	**3.07**	**0.00**	**227.75**	0.03	0.09	0.16	0.36	1%
		2%	**97%**	**1%**	**0%**	**100%**					

Note: Land use coefficients sourced from City of Colorado Springs Drainage Criteria Manual, Volume 1, Table 6-6.

Kimley»Horn

STANDARD FORM SF-2
Time of Concentration

PROJECT NAME: Overlook
PROJECT NUMBER: 196239003
CALCULATED BY: GKS
CHECKED BY: KRK

EXISTING CONDITIONS

DATE: 9/16/2024

SUB-BASIN DATA			INITIAL TIME (T_i)			TRAVEL TIME (T_t)					Tc CHECK (URBANIZED BASINS)					FINAL Tc
DESIGN BASIN (1)	AREA Ac (2)	C5 (3)	LENGTH Ft (4)	SLOPE % (5)	T_i Min. (6)	LENGTH Ft. (7)	SLOPE % (8)	C_v (9)	VEL fps (11)	T_t Min. (12)	COMP. tc (13)	TOTAL LENGTH (14)	TOTAL SLOPE (15)	TOTAL IMP. (16)	Tc Min. (17)	Min.
FDR Basins																
A1	19.92	0.15	300	18.0%	11.5	2,066	5.7%	2.5	0.6	57.7	69.2	2366	7.3%	8%	23.1	23.1
A2	63.97	0.09	300	18.0%	12.3	3,677	5.7%	2.5	0.6	102.7	114.9	3977	6.6%	1%	32.1	32.1
B1	43.28	0.08	300	25.0%	11.1	2,577	6.5%	2.5	0.6	67.4	78.5	2877	8.4%		26.0	26.0
B2	42.42	0.08	300	6.9%	17.0	2,347	10.3%	2.5	0.8	48.8	65.8	2647	9.9%		24.7	24.7
B3	25.42	0.08	300	23.0%	11.4	1,968	9.9%	2.5	0.8	41.7	53.1	2268	11.6%		22.6	22.6
B3A	24.23	0.08	300	20.0%	11.9	1,500	10.0%	2.5	0.8	31.6	43.6	1800	11.7%		20.0	20.0
OS-A1	4.06	0.24	300	5.0%	16.1	161	5.0%	2.5	0.6	4.8	20.9	461	5.0%	19%	12.6	12.6
OS-A2	4.45	0.12	250	10.0%	13.2			2.5			13.2	250	10.0%	7%	11.4	11.4

$$t_i = \frac{0.395(1.1 - C_5)\sqrt{L_i}}{S_0^{0.33}} \qquad t_c = \frac{L}{180} + 10 \qquad V = C_v S_w^{0.5}$$

Note: Conveyance coefficient from Table 6-7 of DCM

Kimley»Horn

STANDARD FORM SF-3
STORM DRAINAGE DESIGN - RATIONAL METHOD 2 YEAR EVENT

PROJECT NAME: Overlook
PROJECT NUMBER: 196239003
CALCULATED BY: GKS
CHECKED BY: KRK

EXISTING CONDITIONS

DATE: 9/16/2024

STORM LINE		DESIGN POINT	DIRECT RUNOFF							TOTAL RUNOFF				STREET		PIPE			TRAVEL TIME			REMARKS
			DESIGN BASIN	AREA (AC)	RUNOFF COEFF	tc (min)	C*A(ac)	I (in/hr)	Q (cfs)	tc(max)	S(C*A) (ac)	I (in/hr)	Q (cfs)	SLOPE (%)	STREET FLOW(cfs	DESIGN FLOW(cfs)	SLOPE (%)	PIPE SIZE (in)	LENGTH (ft)	VELOCITY	tt (min)	
(1)		(2)	(3)	(4)	(5)	(6)	(7)	(8)	(9)	(10)	(11)	(12)	(13)	(14)	(15)	(16)	(17)	(18)	(19)	(20)	(21)	(22)
		1	A1	19.92	0.09	23.14	1.83	2.30	4.19													
		2	A2	63.97	0.03	32.09	1.85	1.91	3.54													
		3	B1	43.28	0.02	25.98	0.87	2.16	1.87													
		4	B2	42.42	0.02	24.71	0.85	2.22	1.88													
		5	B3	25.42	0.02	22.60	0.51	2.32	1.18													
		5A	B3A	24.23	0.02	20.00	0.48	2.47	1.20													
		14	OS-A1	4.06	0.19	12.56	0.75	3.02	2.27													
		15	OS-A2	4.45	0.05	11.39	0.22	3.14	0.70													

Note: Rainfall intensity from Figure 6-5 IDF Equations

$$I_2 = -1.19\ln\left(t_{c,min}\right) + 6.035$$

Kimley»Horn

STANDARD FORM SF-3
STORM DRAINAGE DESIGN - RATIONAL METHOD 5 YEAR EVENT

PROJECT NAME: Overlook
PROJECT NUMBER: 196239003
CALCULATED BY: GKS
CHECKED BY: KRK

EXISTING CONDITIONS

DATE: 9/16/2024

STORM LINE		DESIGN POINT	DIRECT RUNOFF							TOTAL RUNOFF				STREET		PIPE			TRAVEL TIME			REMARKS
			DESIGN BASIN	AREA (AC)	RUNOFF COEFF	tc (min)	C*A(ac)	I (in/hr)	Q (cfs)	tc(max)	S(C*A) (ac)	I (in/hr)	Q (cfs)	SLOPE (%)	STREET FLOW(cfs	DESIGN FLOW(cfs)	SLOPE (%)	PIPE SIZE (in)	LENGTH (ft)	VELOCITY	tt (min)	
(1)		(2)	(3)	(4)	(5)	(6)	(7)	(8)	(9)	(10)	(11)	(12)	(13)	(14)	(15)	(16)	(17)	(18)	(19)	(20)	(21)	(22)
		1	A1	19.92	0.15	23.14	2.94	2.87	8.43													
		2	A2	63.97	0.09	32.09	5.66	2.38	13.47													
		3	B1	43.28	0.08	25.98	3.46	2.70	9.34													
		4	B2	42.42	0.08	24.71	3.39	2.77	9.41													
		5	B3	25.42	0.08	22.60	2.03	2.91	5.91													
		5A	B3A	24.23	0.08	20.00	1.94	3.09	5.99													
		14	OS-A1	4.06	0.24	12.56	0.96	3.79	3.62													
		15	OS-A2	4.45	0.12	11.39	0.53	3.93	2.10													

Note: Rainfall intensity from Figure 6-5 IDF Equations

$$I_5 = -1.5\ln(t_{c,min}) + 7.583$$

Kimley»Horn

STANDARD FORM SF-3
STORM DRAINAGE DESIGN - RATIONAL METHOD 100 YEAR EVENT

PROJECT NAME: Overlook
PROJECT NUMBER: 196239003
CALCULATED BY: GKS
CHECKED BY: KRK

EXISTING CONDITIONS

DATE: 9/16/2024

STORM LINE		DESIGN POINT	DIRECT RUNOFF							TOTAL RUNOFF				STREET		PIPE			TRAVEL TIME			REMARKS
			DESIGN BASIN	AREA (AC)	RUNOFF COEFF	tc (min)	C*A(ac)	I (in/hr)	Q (cfs)	tc(max)	S(C*A) (ac)	I (in/hr)	Q (cfs)	SLOPE (%)	STREET FLOW(cfs	DESIGN FLOW(cfs)	SLOPE (%)	PIPE SIZE (in)	LENGTH (ft)	VELOCITY	tt (min)	
(1)		(2)	(3)	(4)	(5)	(6)	(7)	(8)	(9)	(10)	(11)	(12)	(13)	(14)	(15)	(16)	(17)	(18)	(19)	(20)	(21)	(22)
		1	A1	19.92	0.40	23.14	7.97	4.82	38.41													
		2	A2	63.97	0.36	32.09	22.79	3.99	91.03													
		3	B1	43.28	0.35	25.98	15.15	4.53	68.56													
		4	B2	42.42	0.35	24.71	14.85	4.65	69.09													
		5	B3	25.42	0.35	22.60	8.90	4.88	43.40													
		5A	B3A	24.23	0.35	20.00	8.48	5.19	43.98													
		14	OS-A1	4.06	0.47	12.56	1.89	6.36	12.02													
		15	OS-A2	4.45	0.39	11.39	1.74	6.60	11.46													

Note: Rainfall intensity from Figure 6-5 IDF Equations $I_{100} = -2.52\ln(t_{c,min}) + 12.735$

Kimley»Horn

PROJECT NAME: Overlook 9/16/2024
PROJECT NUMBER: 196239003
CALCULATED BY: GKS
CHECKED BY: KRK

EXISTING CONDITIONS RATIONAL CALCULATIONS SUMMARY

DESIGN POINT	TRIBUTARY BASINS	TRIBUTARY AREA (AC)	CFS			% IMPERVIOUS
			Q2	Q5	Q100	
FDR Basins						
1	A1	19.92	4.19	8.43	38.41	8%
2	A2	63.97	3.54	13.47	91.03	1%
3	B1	43.28	1.87	9.34	68.56	0%
4	B2	42.42	1.88	9.41	69.09	0%
5	B3	25.42	1.18	5.91	43.40	0%
5A	B3A	24.23	1.20	5.99	43.98	0%
14	OS-A1	4.06	2.27	3.62	12.02	19%
15	OS-A2	4.45	0.70	2.10	11.46	7%
ON-SITE BASIN TOTAL						
BASIN A TOTAL		83.89	7.73	21.90	129.44	3%
BASIN B TOTAL		135.35	6.13	30.64	225.03	0%
ON-SITE TOTAL		**219.24**	**13.86**	**52.55**	**354.46**	**1%**
OFF-SITE BASIN TOTAL						
OFF-SITE BASIN A		8.51	2.97	5.72	23.48	13%
OFF-SITE TOTAL		**8.51**	**2.97**	**5.72**	**23.48**	**13%**
SITE TOTAL		**227.75**	**16.83**	**58.27**	**377.95**	**1%**

Kimley»Horn

STANDARD FORM SF-1
RUNOFF COEFFICIENTS - IMPERVIOUS CALCULATION
PROPOSED CONDITIONS

PROJECT NAME: Overlook
PROJECT NUMBER: 196239003
CALCULATED BY: GKS
CHECKED BY: KRK

DATE: 9/16/2024

SOIL: B

LAND USE:	RESIDENTIAL (>5AC) AREA	PASTURE/MEADOW (SOIL GROUP A/B) AREA	PAVEMENT AREA	AREA
2-YEAR COEFF.	0.05	0.02	0.89	
5-YEAR COEFF.	0.12	0.08	0.90	
10-YEAR COEFF.	0.20	0.15	0.92	
100-YEAR COEFF.	0.39	0.35	0.96	
IMPERVIOUS %	7%	0%	100%	

DESIGN BASIN	DESIGN POINT	RESIDENTIAL (>5AC) AREA (AC)	PASTURE/MEADOW (SOIL GROUP A/B) AREA (AC)	PAVEMENT AREA (AC)	AREA (AC)	TOTAL AREA (AC)	C(2)	C(5)	C(10)	C(100)	Imp %
FDR Basins											
A1	1	17.91		1.64		**19.55**	0.12	0.19	0.26	0.44	15%
A2	2	59.76		2.22		**61.98**	0.08	0.15	0.23	0.41	10%
B1	3	37.03		1.35		**38.38**	0.08	0.15	0.23	0.41	10%
B2	4	15.57		0.24		**15.81**	0.06	0.13	0.21	0.40	8%
B3	5	19.11				**19.11**	0.05	0.12	0.20	0.39	7%
B6	8	49.92		2.23		**52.15**	0.09	0.15	0.23	0.41	11%
B7	9	2.46				**2.46**	0.05	0.12	0.20	0.39	7%
B8	10	9.52				**9.52**	0.05	0.12	0.20	0.39	7%
OS-A1	18	3.29		0.77		**4.06**	0.21	0.27	0.34	0.50	25%
OS-A2	19	3.14				**3.14**	0.05	0.12	0.20	0.39	7%
OS-A3	20	1.22		0.09		**1.31**	0.11	0.17	0.25	0.43	13%
TOTAL - OVERALL		**217.71**	**0.00**	**8.45**	**0.00**	**226.16**	0.08	0.15	0.23	0.41	10%
		96%	**0%**	**4%**	**0%**	**100%**					

Note: Land use coefficients sourced from City of Colorado Springs Drainage Criteria Manual, Volume 1, Table 6-6.

Kimley»Horn

STANDARD FORM SF-2
Time of Concentration

PROJECT NAME: Overlook
PROJECT NUMBER: 196239003
CALCULATED BY: GKS
CHECKED BY: KRK

PROPOSED CONDITIONS

DATE: 9/16/2024

SUB-BASIN DATA			INITIAL TIME (T_i)			TRAVEL TIME (T_t)					Tc CHECK (URBANIZED BASINS)					FINAL Tc
DESIGN BASIN (1)	AREA Ac (2)	C5 (3)	LENGTH Ft (4)	SLOPE % (5)	T_i Min. (6)	LENGTH Ft. (7)	SLOPE % (8)	C_v (9)	VEL fps (11)	T_t Min. (12)	COMP. tc (13)	TOTAL LENGTH (14)	TOTAL SLOPE (15)	TOTAL IMP. (16)	Tc Min. (17)	Min.
FDR Basins																
A1	19.55	0.19	300	18.0%	11.1	2,066	5.0%	2.5	0.6	61.6	72.7	2366	6.6%	15%	23.1	23.1
A2	61.98	0.15	300	18.0%	11.5	4,100	4.0%	2.5	0.5	136.7	148.2	4400	5.0%	10%	34.4	34.4
B1	38.38	0.15	300	8.0%	15.1	2,000	4.5%	2.5	0.5	62.9	78.0	2300	5.0%	10%	22.8	22.8
B2	15.81	0.13	300	7.0%	16.1	500	6.0%	2.5	0.6	13.6	29.7	800	6.4%	8%	14.4	14.4
B3	19.11	0.12	300	21.0%	11.3	800	8.0%	2.5	0.7	18.9	30.1	1100	11.5%	7%	16.1	16.1
B6	52.15	0.15	300	22.0%	10.7	1,900	3.0%	2.5	0.4	73.1	83.9	2200	5.6%	11%	22.2	22.2
B7	2.46	0.12	300	6.0%	17.1	100	6.0%	2.2	0.5	3.1	20.2	400	6.0%	7%	12.2	12.2
B8	9.52	0.12	300	6.0%	17.1	300	10.0%	2.5	0.8	6.3	23.5	600	8.0%	7%	13.3	13.3
OS-A1	4.06	0.27	300	5.0%	15.5	161	5.0%	2.5	0.6	4.8	20.3	461	5.0%	25%	12.6	12.6
OS-A2	3.14	0.12	250	10.0%	13.2			2.5			13.2	250	10.0%	7%	11.4	11.4
OS-A3	1.31	0.17	300	13.0%	12.5			2.5			12.5	300	13.0%	13%	11.7	11.7

$$t_i = \frac{0.395(1.1 - C_5)\sqrt{L_i}}{S_0^{0.33}} \qquad t_c = \frac{L}{180} + 10 \qquad V = C_v S_w^{0.5}$$

Note: Conveyance coefficient from Table 6-7 of DCM

Kimley»Horn

STANDARD FORM SF-3
STORM DRAINAGE DESIGN - RATIONAL METHOD 2 YEAR EVENT

PROJECT NAME: Overlook
PROJECT NUMBER: 196239003
CALCULATED BY: GKS
CHECKED BY: KRK

PROPOSED CONDITIONS

DATE: 9/16/2024

STORM LINE		DESIGN POINT	DIRECT RUNOFF							TOTAL RUNOFF				STREET		PIPE			TRAVEL TIME			REMARKS
			DESIGN BASIN	AREA (AC)	RUNOFF COEFF	tc (min)	C*A(ac)	I (in/hr)	Q (cfs)	tc(max)	S(C*A) (ac)	I (in/hr)	Q (cfs)	SLOPE (%)	STREET FLOW(cfs	DESIGN FLOW(cfs)	SLOPE (%)	PIPE SIZE (in)	LENGTH (ft)	VELOCITY	tt (min)	
(1)		(2)	(3)	(4)	(5)	(6)	(7)	(8)	(9)	(10)	(11)	(12)	(13)	(14)	(15)	(16)	(17)	(18)	(19)	(20)	(21)	(22)
		1	A1	19.55	0.12	23.14	2.36	2.30	5.41													
		2	A2	61.98	0.08	34.44	4.96	1.82	9.05													
		3	B1	38.38	0.08	22.78	3.05	2.32	7.07													
		4	B2	15.81	0.06	14.44	0.99	2.86	2.83													
		5	B3	19.11	0.05	16.11	0.96	2.73	2.61													
		8	B6	52.15	0.09	22.22	4.48	2.34	10.51													
		9	B7	2.46	0.05	12.22	0.12	3.06	0.38													
		10	B8	9.52	0.05	13.33	0.48	2.95	1.41													
		18	OS-A1	4.06	0.21	12.56	0.85	3.02	2.57													
		19	OS-A2	3.14	0.05	11.39	0.16	3.14	0.49													
		20	OS-A3	1.31	0.11	11.67	0.14	3.11	0.43													

Note: Rainfall intensity from Figure 6-5 IDF Equations

$$I_2 = -1.19\ln\left(t_{c,min}\right) + 6.035$$

Kimley»Horn

STANDARD FORM SF-3
STORM DRAINAGE DESIGN - RATIONAL METHOD 5 YEAR EVENT

PROJECT NAME: Overlook
PROJECT NUMBER: 196239003
CALCULATED BY: GKS
CHECKED BY: KRK

PROPOSED CONDITIONS

DATE: 9/16/2024

STORM LINE		DESIGN POINT	DIRECT RUNOFF							TOTAL RUNOFF				STREET		PIPE			TRAVEL TIME			REMARKS
			DESIGN BASIN	AREA (AC)	RUNOFF COEFF	tc (min)	C*A(ac)	I (in/hr)	Q (cfs)	tc(max)	S(C*A) (ac)	I (in/hr)	Q (cfs)	SLOPE (%)	STREET FLOW(cfs	DESIGN FLOW(cfs)	SLOPE (%)	PIPE SIZE (in)	LENGTH (ft)	VELOCITY	tt (min)	
(1)		(2)	(3)	(4)	(5)	(6)	(7)	(8)	(9)	(10)	(11)	(12)	(13)	(14)	(15)	(16)	(17)	(18)	(19)	(20)	(21)	(22)
		1	A1	19.55	0.19	23.14	3.63	2.87	10.41													
		2	A2	61.98	0.15	34.44	9.17	2.27	20.85													
		3	B1	38.38	0.15	22.78	5.66	2.89	16.38													
		4	B2	15.81	0.13	14.44	2.08	3.58	7.46													
		5	B3	19.11	0.12	16.11	2.29	3.41	7.83													
		8	B6	52.15	0.15	22.22	8.00	2.93	23.44													
		9	B7	2.46	0.12	12.22	0.30	3.83	1.13													
		10	B8	9.52	0.12	13.33	1.14	3.70	4.22													
		18	OS-A1	4.06	0.27	12.56	1.09	3.79	4.12													
		19	OS-A2	3.14	0.12	11.39	0.38	3.93	1.48													
		20	OS-A3	1.31	0.17	11.67	0.22	3.90	0.87													

Note: Rainfall intensity from Figure 6-5 IDF Equations

$$I_5 = -1.5\ln(t_{c,min}) + 7.583$$

Kimley»Horn

STANDARD FORM SF-3
STORM DRAINAGE DESIGN - RATIONAL METHOD 100 YEAR EVENT

PROJECT NAME: Overlook
PROJECT NUMBER: 196239003
CALCULATED BY: GKS
CHECKED BY: KRK

PROPOSED CONDITIONS

DATE: 9/16/2024

STORM LINE		DESIGN POINT	DIRECT RUNOFF							TOTAL RUNOFF				STREET		PIPE			TRAVEL TIME			REMARKS
			DESIGN BASIN	AREA (AC)	RUNOFF COEFF	tc (min)	C*A(ac)	I (in/hr)	Q (cfs)	tc(max)	S(C*A) (ac)	I (in/hr)	Q (cfs)	SLOPE (%)	STREET FLOW(cfs	DESIGN FLOW(cfs)	SLOPE (%)	PIPE SIZE (in)	LENGTH (ft)	VELOCITY	tt (min)	
(1)		(2)	(3)	(4)	(5)	(6)	(7)	(8)	(9)	(10)	(11)	(12)	(13)	(14)	(15)	(16)	(17)	(18)	(19)	(20)	(21)	(22)
		1	A1	19.55	0.44	23.14	8.56	4.82	41.24													
		2	A2	61.98	0.41	34.44	25.44	3.82	97.07													
		3	B1	38.38	0.41	22.78	15.74	4.86	76.45													
		4	B2	15.81	0.40	14.44	6.30	6.01	37.85													
		5	B3	19.11	0.39	16.11	7.45	5.73	42.71													
		8	B6	52.15	0.41	22.22	21.61	4.92	106.32													
		9	B7	2.46	0.39	12.22	0.96	6.43	6.17													
		10	B8	9.52	0.39	13.33	3.71	6.21	23.05													
		18	OS-A1	4.06	0.50	12.56	2.02	6.36	12.86													
		19	OS-A2	3.14	0.39	11.39	1.22	6.60	8.09													
		20	OS-A3	1.31	0.43	11.67	0.56	6.54	3.65													

Note: Rainfall intensity from Figure 6-5 IDF Equations $I_{100} = -2.52\ln(t_{c,min}) + 12.735$

Kimley»Horn

PROJECT NAME: Overlook 9/16/2024
PROJECT NUMBER: 196239003
CALCULATED BY: GKS
CHECKED BY: KRK

PROPOSED CONDITIONS RATIONAL CALCULATIONS SUMMARY

DESIGN POINT	TRIBUTARY BASINS	TRIBUTARY AREA (AC)	CFS			% IMPERVIOUS	DETAINED 100 YR OUTFLOW (CFS)
			Q2	Q5	Q100		
Basins							
1	A1	19.55	5.41	10.41	41.24	15%	
2	A2	61.98	9.05	20.85	97.07	10%	
EDB A2	A2						64.40
3	B1	38.38	7.07	16.38	76.45	10%	
EDB B1	B1						42.45
4	B2	15.81	2.83	7.46	37.85	8%	
5	B3	19.11	2.61	7.83	42.71	7%	
8	B6	52.15	10.51	23.44	106.32	11%	
9	B7	2.46	0.38	1.13	6.17	7%	
10	B8	9.52	1.41	4.22	23.05	7%	
EDB B8	B6+B8						39.40
18	OS-A1	4.06	2.57	4.12	12.86	25%	
19	OS-A2	3.14	0.49	1.48	8.09	7%	
20	OS-A3	1.31	0.43	0.87	3.65	13%	
ON-SITE BASIN TOTAL							
BASIN A TOTAL		81.53	14.46	31.26	138.30	11%	
BASIN B TOTAL		137.43	24.80	60.46	292.55	10%	
ON-SITE TOTAL		**218.96**	**39.25**	**91.72**	**430.86**	**10%**	
OFF-SITE BASIN TOTAL							
OFF-SITE BASIN A		8.51	3.49	6.47	24.60	16%	
OFF-SITE TOTAL		**8.51**	**3.49**	**6.47**	**24.60**	**16%**	
SITE TOTAL		**8.51**	**42.74**	**98.19**	**455.46**	**10%**	

APPENDIX D: HYDRUALICS

Add calculations for forebays, forebay notches, trickle channel.

Please provide forebay design calculations. The minimum forebay volumes are shown on MHFD T-5 Table EDB-4. The minimum forebay volume should be 1-3% of the undetained peak 100-year discharge , depending on the tributary impervious acreage. And the forebay outlet should release 2% of the undetained peak 100-year discharge

Per DCMv2 – Chap 4.2, trickle channel should at a minimum provide capacity equal to twice the release capacity at the upstream forebay outlet. Provide these calcs in the drainage report and revise plans as needed.

FOREBAY CLACULATIONS COMPLETE AND ADDED TO APPENDIX. TICKLE CHANNEL CALS ADDED TO APPENDIX. BASED ON RECOMMENDATIONS FROM USDCM v3 SECTION 5.2.2 WE WILL BE PROPOSING A BERM WITH PIPE RATHER THAN A NOTCH. PIPE SIZING TO RELEASE 2% UNDETAINED PEAK 100-YR FLOWS HAS BEEN CALCULATED. PIPE SIZE AND FLOWS HAVE BEEN ADDED TO FORBAY SUMMARY. DETAIL FLOWMASTER REPORTS FOR INDAVIDUAL FOREBAYS HAVE BEEN INCLUDED IN APPENDIX.

TRICKLE CHANNEL CALCUATIONS WERE ADDED. SIZED FOR THE MOST CONSERVATIVE RELEASE RATE (2X THE HIGHEST FLOW) THE REST OF THE TRICKLE CHANNELS ARE AT THE SAME WIDTH FOR SIMPLICITY

DETENTION BASIN ST

MHFD-Deten

NOTED. POND ADDED TO UD-DETENTION SHEETS

Project: Overlook A2 Filing No. 1

Basin ID:

Put 'pond' in title. Typical comment for all. ie Pond A2

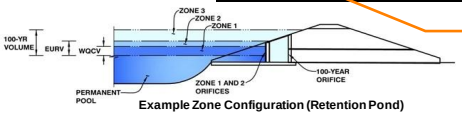

Example Zone Configuration (Retention Pond)

Depth Increment = ft

Stage - Storage Description	Stage (ft)	Optional Override Stage (ft)	Length (ft)	Width (ft)	Area (ft²)	Optional Override Area (ft²)	Area (acre)	Volume (ft³)	Volume (ac-ft)
7192.5 Top of Micropool	--	0.00	--	--	--	173	0.004		
7193	--	0.50	--	--	--	731	0.017	226	0.005
7194	--	1.50	--	--	--	2,707	0.062	1,945	0.045
7195	--	2.50	--	--	--	15,460	0.355	11,028	0.253
7196							0.701	34,023	0.781
7197							0.821	67,159	1.542
7198							0.938	105,467	2.421
7199							1.097	149,800	3.439
7200							1.246	200,831	4.610

Why is this overridden? It is 0.346 in the SDI form.

WQCV IS OVERRIDDEN ON UD-DETENTION SHEETS AS POND IS SIZED FOR THE NON-EXEPMT WQCV. DETAILED EXPLATATION OF WQCV AND EXEMPTIONS CAN BE FOUND IN REPORT TEXT.

Watershed Information

Selected BMP Type =	EDB	
Watershed Area =	61.98	acres
Watershed Length =	2,500	ft
Watershed Length to Centroid =	1,250	ft
Watershed Slope =	0.030	ft/ft
Watershed Imperviousness =	10.00%	percent
Percentage Hydrologic Soil Group A =	0.0%	percent
Percentage Hydrologic Soil Group B =	100.0%	percent
Percentage Hydrologic Soil Groups C/D =	0.0%	percent
Target WQCV Drain Time =	40.0	hours
Location for 1-hr Rainfall Depths =	User Input	

After providing required inputs above including 1-hour rainfall depths, click 'Run CUHP' to generate runoff hydrographs using the embedded Colorado Urban Hydrograph Procedure.

			Optional User Overrides	
Water Quality Capture Volume (WQCV) =	0.093	acre-feet	0.093	acre-feet
Excess Urban Runoff Volume (EURV) =	0.583	acre-feet		acre-feet
2-yr Runoff Volume (P1 = 1.19 in.) =	0.827	acre-feet	1.19	inches
5-yr Runoff Volume (P1 = 1.5 in.) =	1.827	acre-feet	1.50	inches
10-yr Runoff Volume (P1 = 1.75 in.) =	2.824	acre-feet	1.75	inches
25-yr Runoff Volume (P1 = 2 in.) =	4.601	acre-feet	2.00	inches
50-yr Runoff Volume (P1 = 2.25 in.) =	5.814	acre-feet	2.25	inches
100-yr Runoff Volume (P1 = 2.52 in.) =	7.559	acre-feet	2.52	inches
500-yr Runoff Volume (P1 = 3.14 in.) =	10.741	acre-feet		inches
Approximate 2-yr Detention Volume =	0.372	acre-feet		
Approximate 5-yr Detention Volume =	0.583	acre-feet		
Approximate 10-yr Detention Volume =	1.211	acre-feet		
Approximate 25-yr Detention Volume =	1.691	acre-feet		
Approximate 50-yr Detention Volume =	1.769	acre-feet		
Approximate 100-yr Detention Volume =	2.287	acre-feet		

Define Zones and Basin Geometry

Zone 1 Volume (WQCV) =	0.093	acre-feet
Zone 2 Volume (EURV - Zone 1) =	0.490	acre-feet
Zone 3 Volume (100-year - Zones 1 & 2) =	1.704	acre-feet
Total Detention Basin Volume =	2.287	acre-feet
Initial Surcharge Volume (ISV) =	user	ft^3
Initial Surcharge Depth (ISD) =	user	ft
Total Available Detention Depth (H_{total}) =	user	ft
Depth of Trickle Channel (H_{TC}) =	user	ft
Slope of Trickle Channel (S_{TC}) =	user	ft/ft
Slopes of Main Basin Sides (S_{main}) =	user	H:V
Basin Length-to-Width Ratio ($R_{L/W}$) =	user	
Initial Surcharge Area (A_{ISV}) =	user	ft^2
Surcharge Volume Length (L_{ISV}) =	user	ft
Surcharge Volume Width (W_{ISV}) =	user	ft
Depth of Basin Floor (H_{FLOOR}) =	user	ft
Length of Basin Floor (L_{FLOOR}) =	user	ft
Width of Basin Floor (W_{FLOOR}) =	user	ft
Area of Basin Floor (A_{FLOOR}) =	user	ft^2
Volume of Basin Floor (V_{FLOOR}) =	user	ft^3
Depth of Main Basin (H_{MAIN}) =	user	ft
Length of Main Basin (L_{MAIN}) =	user	ft
Width of Main Basin (W_{MAIN}) =	user	ft
Area of Main Basin (A_{MAIN}) =	user	ft^2
Volume of Main Basin (V_{MAIN}) =	user	ft^3
Calculated Total Basin Volume (V_{total}) =	user	acre-feet

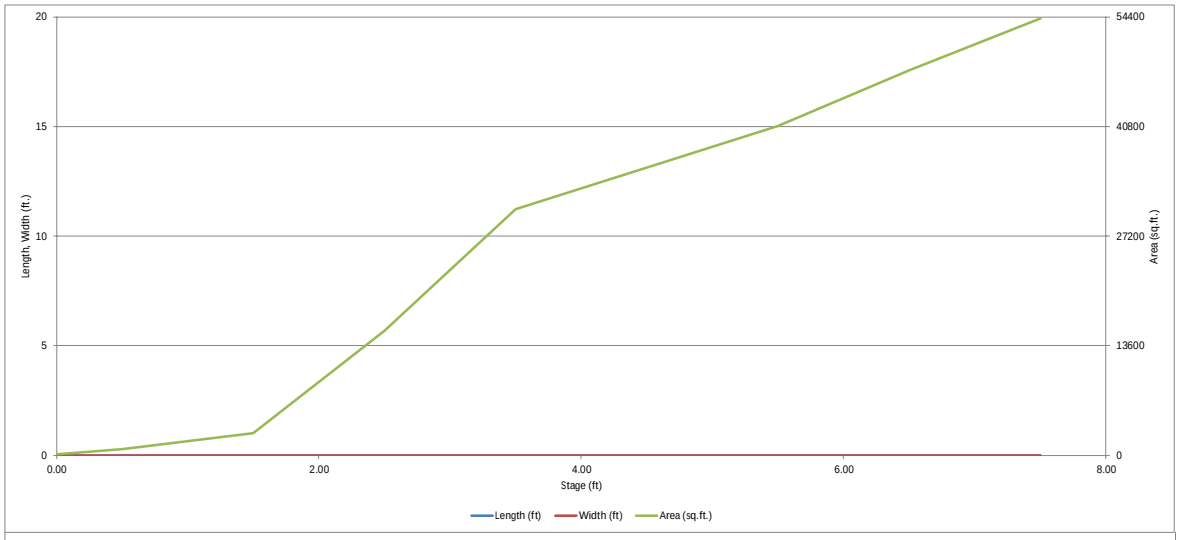
20
15
10
5
0
Length, Width (ft.)
54400
40800
27200
13600
0
Area (sq.ft.)
0.00
2.00
4.00
6.00
8.00
Stage (ft)
Length (ft)
Width (ft)
Area (sq.ft.)

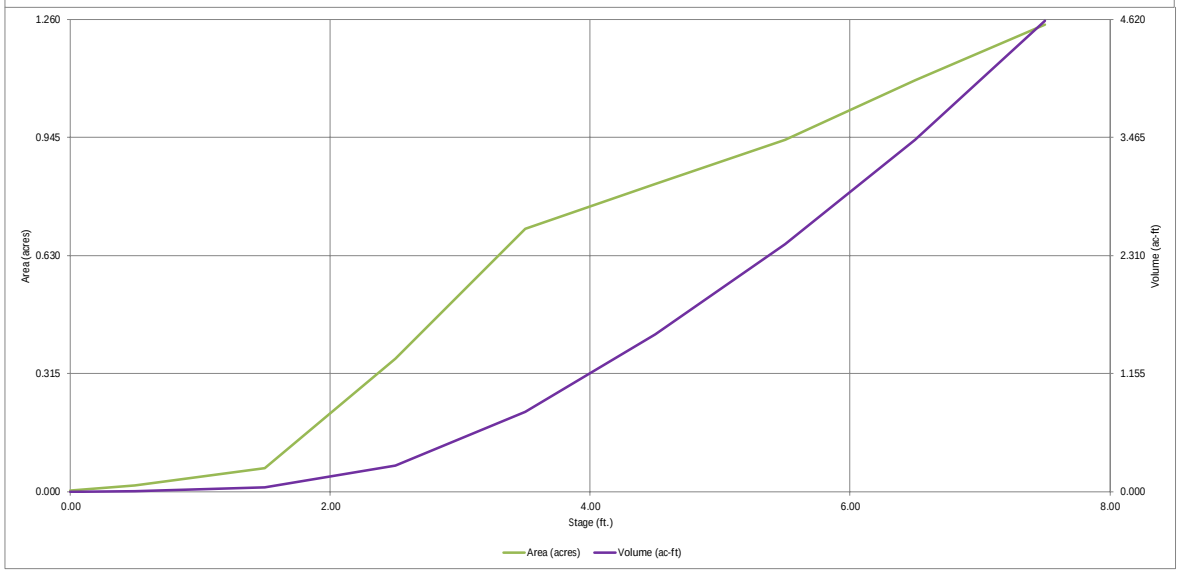
1.260
0.945
0.630
0.315
0.000
Area (acres)
4.620
3.465
2.310
1.155
0.000
Volume (ac-ft)
0.00
2.00
4.00
6.00
8.00
Stage (ft.)
Area (acres)
Volume (ac-ft)

✓ = calcs match details in plans

✗ = calcs do not match details in plans

NOTED

DETENTION BASIN OUTLET STRUCTURE DESIGN

MHFD-Detention, Version 4.06 (July 2022)

Project: Overlook A2 Filing No. 1

Basin ID:

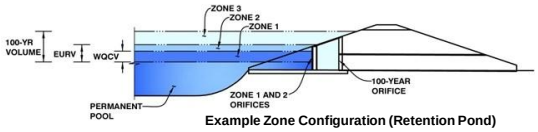

Example Zone Configuration (Retention Pond)

	Estimated Stage (ft)	Estimated Volume (ac-ft)	Outlet Type
Zone 1 (WQCV)	1.91	0.093	Orifice Plate
Zone 2 (EURV)	3.20	0.490	Rectangular Orifice
Zone 3 (100-year)	5.36	1.704	Weir&Pipe (Restrict)
Total (all zones)		2.287	

User Input: Orifice at Underdrain Outlet (typically used to drain WQCV in a Filtration BMP)

Underdrain Orifice Invert Depth =	N/A	ft (distance below the filtration media surface)	Underdrain Orifice Area =	N/A	ft^2
Underdrain Orifice Diameter =	N/A	inches	Underdrain Orifice Centroid =	N/A	feet

User Input: Orifice Plate with one or more orifices or Elliptical Slot Weir (typically used to drain WQCV and/or EURV in a sedimentation BMP)

Centroid of Lowest Orifice =	0.00	ft (relative to basin bottom at Stage = 0 ft)	WQ Orifice Area per Row =	N/A	ft^2
Depth at top of Zone using Orifice Plate =	1.43	ft (relative to basin bottom at Stage = 0 ft)	Elliptical Half-Width =	N/A	feet
Orifice Plate: Orifice Vertical Spacing =	N/A	inches	Elliptical Slot Centroid =	N/A	feet
Orifice Plate: Orifice Area per Row =	N/A	sq. inches	Elliptical Slot Area =	N/A	ft^2

User Input: Stage and Total Area of Each Orifice Row (numbered from lowest to highest)

	Row 1 (required)	Row 2 (optional)	Row 3 (optional)	Row 4 (optional)	Row 5 (optional)	Row 6 (optional)	Row 7 (optional)	Row 8 (optional)
Stage of Orifice Centroid (ft)	0.00	0.25	1.00					
Orifice Area (sq. inches)	0.34	0.34	0.34					

	Row 9 (optional)	Row 10 (optional)	Row 11 (optional)	Row 12 (optional)	Row 13 (optional)	Row 14 (optional)	Row 15 (optional)	Row 16 (optional)
Stage of Orifice Centroid (ft)								
Orifice Area (sq. inches)								

User Input: Vertical Orifice (Circular or Rectangular)

	Zone 2 Rectangular	Not Selected			Zone 2 Rectangular	Not Selected	
Invert of Vertical Orifice =	2.00	N/A	ft (relative to basin bottom at Stage = 0 ft)	Vertical Orifice Area =	0.05	N/A	ft^2
Depth at top of Zone using Vertical Orifice =	3.20	N/A	ft (relative to basin bottom at Stage = 0 ft)	Vertical Orifice Centroid =	0.08	N/A	feet
Vertical Orifice Height =	2.00	N/A	inch				
Vertical Orifice Width =	3.50		inch				

THE 6' DIMENSION REPRESENTS OUTSIDE TO OUTSIDE. NOT THE LENGHT OF WEIR. DIMENSION ADJUSTED ON PLAN SHEETS TO PROVIDE CLARITY

User Input: Overflow Weir (Dropbox with Flat or Sloped Grate and Outlet Pipe OR Rectangular

	Zone 3 Weir	Not Selected			Zone 3 Weir	Not Selected	
Overflow Weir Front Edge Height, Ho =	3.21	N/A	ft (re		3.21	N/A	feet
Overflow Weir Front Edge Length =	23.00	N/A	feet		5.00	N/A	feet
Overflow Weir Grate Slope =	0.00	N/A	H:V		14.09	N/A	
Horiz. Length of Weir Sides =	5.00	N/A	feet	Overflow Grate Open Area w/o Debris =	80.04	N/A	ft^2
Overflow Grate Type =	Type C Grat	N/A		Overflow Grate Open Area w/ Debris =	40.02	N/A	ft^2
Debris Clogging % =	50%	N/A	%				

6'

User Input: Outlet Pipe w/ Flow Restriction Plate (Circular Orifice, Restrictor Plate, or Rectangular Orifice)

	Zone 3 Restrictor	Not Selected			Zone 3 Restrictor	Not Selected	
Depth to Invert of Outlet Pipe =	2.00	N/A	ft (distance below basin bottom at Stage = 0 ft)	Outlet Orifice Area =	5.68	N/A	ft^2
Outlet Pipe Diameter =	42.00	N/A	inches	Outlet Orifice Centroid =	1.14	N/A	feet
Restrictor Plate Height Above Pipe Invert =	24.00		inches	Half-Central Angle of Restrictor Plate on Pipe =	1.71	N/A	radians

User Input: Emergency Spillway (Rectangular or Trapezoidal)

Spillway Invert Stage=	5.50	ft (relative to basin bottom at Stage = 0 ft)	Spillway Design Flow Depth=	0.91	feet
Spillway Crest Length =	30.00	feet	Stage at Top of Freeboard =	7.41	feet
Spillway End Slopes =	4.00	H:V	Basin Area at Top of Freeboard =	1.23	acres
Freeboard above Max Water Surface =	1.00	feet	Basin Volume at Top of Freeboard =	4.50	acre-ft

Routed Hydrograph Results

The user can override the default CUHP hydrographs and runoff volumes by entering new values in the Inflow Hydrographs table (Columns W through AF).

Design Storm Return Period =	WQCV	EURV	2 Year	5 Year	10 Year	25 Year	50 Year	100 Year	500 Year
One-Hour Rainfall Depth (in) =	N/A	N/A	1.19	1.50	1.75	2.00	2.25	2.52	3.14
CUHP Runoff Volume (acre-ft) =	0.093	0.583	0.827	1.827	2.824	4.601	5.814	7.559	10.741
Inflow Hydrograph Volume (acre-ft) =	N/A	N/A	0.827	1.827	2.824	4.601	5.814	7.559	10.741
CUHP Predevelopment Peak Q (cfs) =	N/A	N/A	6.8	18.9	28.6	51.3	64.4	81.9	114.1
OPTIONAL Override Predevelopment Peak Q (cfs) =	N/A	N/A							
Predevelopment Unit Peak Flow, q (cfs/acre) =	N/A	N/A	0.11	0.30	0.46	0.83	1.04	1.32	1.84
Peak Inflow Q (cfs) =	N/A	N/A	10.8	23.2	33.0	55.4	68.5	86.3	118.8
Peak Outflow Q (cfs) =	0.0	0.3	2.6	14.7	25.5	50.0	60.5	64.4	90.5
Ratio Peak Outflow to Predevelopment Q =	N/A	N/A	N/A	0.8	0.9	1.0	0.9	0.8	0.8
Structure Controlling Flow =	Plate	Vertical Orifice 1	Overflow Weir 1	Overflow Weir 1	Overflow Weir 1	Overflow Weir 1	Outlet Plate 1	Outlet Plate 1	Spillway
Max Velocity through Grate 1 (fps) =	N/A	N/A	0.03	0.2	0.3	0.6	0.8	0.8	0.9
Max Velocity through Grate 2 (fps) =	N/A	N/A	N/A	N/A	N/A	N/A	N/A	N/A	N/A
Time to Drain 97% of Inflow Volume (hours) =	38	63	63	52	43	29	25	21	16
Time to Drain 99% of Inflow Volume (hours) =	41	71	73	66	62	55	51	46	36
Maximum Ponding Depth (ft) =	1.91	3.20	3.30	3.50	3.64	3.88	4.02	4.68	5.85
Area at Maximum Ponding Depth (acres) =	0.18	0.60	0.63	0.70	0.72	0.75	0.76	0.84	0.99
Maximum Volume Stored (acre-ft) =	0.095	0.586	0.642	0.781	0.873	1.056	1.162	1.691	2.759

DETENTION BASIN OUTLET STRUCTURE DESIGN

MHFD-Detention, Version 4.06 (July 2022)

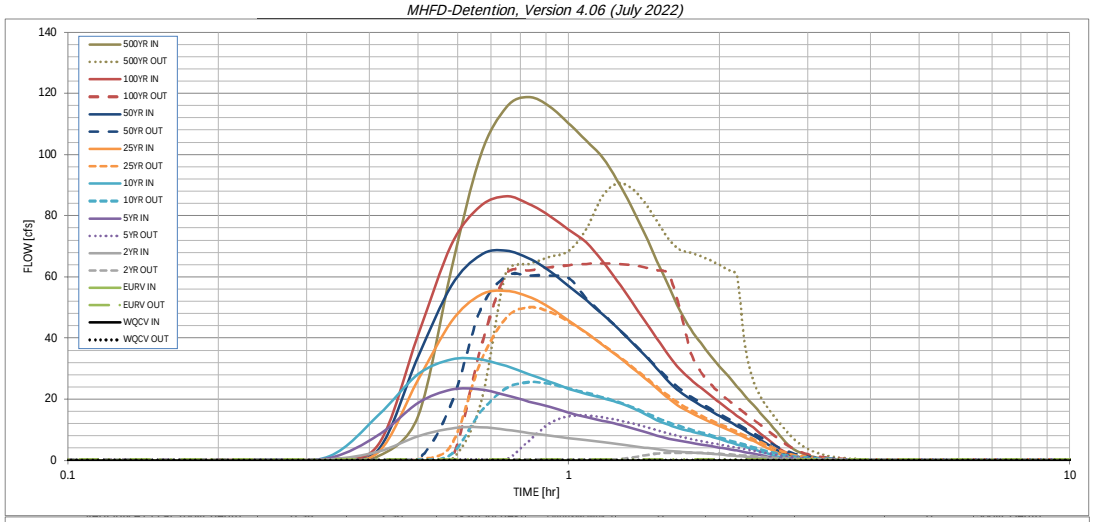

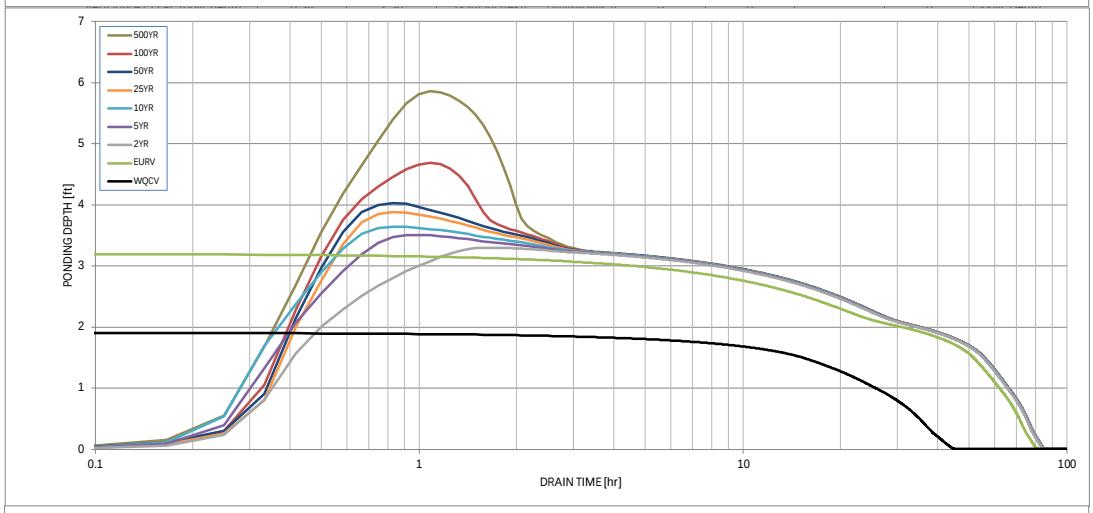

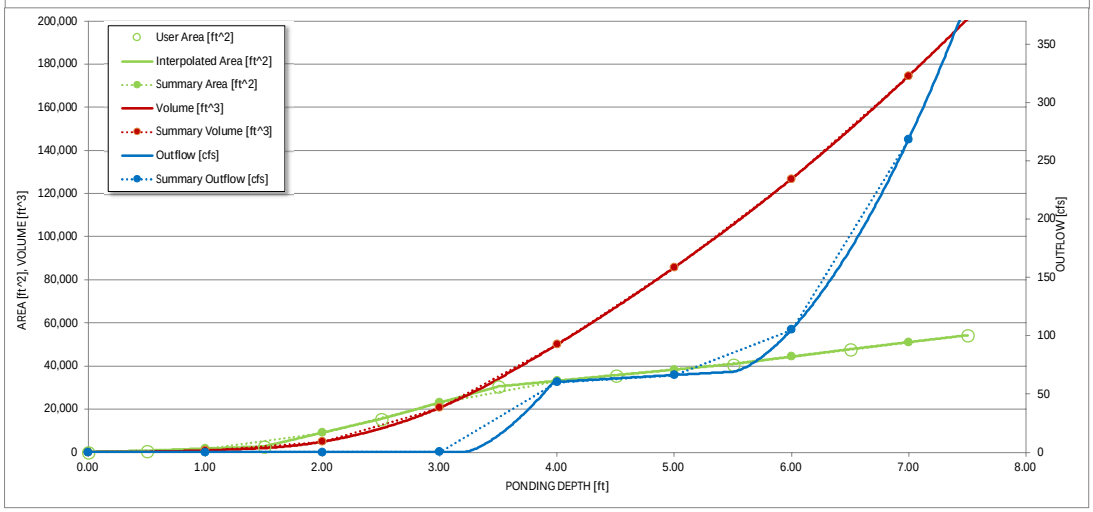

S-A-V-D Chart Axis Override	X-axis	Left Y-Axis	Right Y-Axis
minimum bound			
maximum bound			

DETENTION BASIN OUTLET STRUCTURE DESIGN

Outflow Hydrograph Workbook Filename: _____

Inflow Hydrographs

The user can override the calculated inflow hydrographs from this workbook with inflow hydrographs developed in a separate program.

	SOURCE	CUHP	CUHP	CUHP	CUHP	CUHP	CUHP	CUHP	CUHP	CUHP
Time Interval	TIME	WQCV [cfs]	EURV [cfs]	2 Year [cfs]	5 Year [cfs]	10 Year [cfs]	25 Year [cfs]	50 Year [cfs]	100 Year [cfs]	500 Year [cfs]
5.00 min	0:00:00	0.00	0.00	0.00	0.00	0.00	0.00	0.00	0.00	0.00
	0:05:00	0.00	0.00	0.00	0.00	0.00	0.00	0.00	0.00	0.00
	0:10:00	0.00	0.00	0.00	0.00	0.00	0.00	0.01	0.00	0.03
	0:15:00	0.00	0.00	0.08	0.13	0.16	0.11	0.14	0.13	0.21
	0:20:00	0.00	0.00	0.32	0.78	1.38	0.33	0.39	0.41	1.32
	0:25:00	0.00	0.00	2.81	8.24	14.68	2.68	3.51	5.13	14.36
	0:30:00	0.00	0.00	7.86	18.77	28.11	26.22	33.92	40.85	62.27
	0:35:00	0.00	0.00	10.46	23.11	32.99	45.24	56.97	70.39	99.65
	0:40:00	0.00	0.00	10.84	23.20	32.96	54.09	67.15	83.11	115.36
	0:45:00	0.00	0.00	10.05	21.33	30.80	55.39	68.49	86.32	118.83
	0:50:00	0.00	0.00	8.97	19.26	28.17	53.50	66.07	83.88	115.59
	0:55:00	0.00	0.00	8.08	17.41	25.71	49.93	61.91	79.85	110.27
	1:00:00	0.00	0.00	7.26	15.60	23.43	45.70	56.98	75.42	104.47
	1:05:00	0.00	0.00	6.59	14.14	21.71	41.75	52.38	71.23	99.16
	1:10:00	0.00	0.00	5.98	12.98	20.34	37.85	47.82	65.25	91.57
	1:15:00	0.00	0.00	5.37	11.81	19.02	34.15	43.42	58.71	83.23
	1:20:00	0.00	0.00	4.78	10.57	17.27	30.51	38.89	52.13	74.21
	1:25:00	0.00	0.00	4.19	9.31	15.24	26.97	34.39	45.79	65.25
	1:30:00	0.00	0.00	3.62	8.08	13.18	23.50	30.00	39.85	56.80
	1:35:00	0.00	0.00	3.13	7.08	11.56	20.12	25.73	34.20	48.99
	1:40:00	0.00	0.00	2.80	6.35	10.41	17.52	22.50	29.86	42.99
	1:45:00	0.00	0.00	2.55	5.75	9.46	15.57	20.05	26.56	38.33
	1:50:00	0.00	0.00	2.34	5.20	8.61	13.95	18.01	23.74	34.32
	1:55:00	0.00	0.00	2.12	4.68	7.78	12.51	16.18	21.22	30.73
	2:00:00	0.00	0.00	1.90	4.18	6.94	11.21	14.51	18.92	27.43
	2:05:00	0.00	0.00	1.68	3.67	6.07	9.93	12.85	16.69	24.20
	2:10:00	0.00	0.00	1.45	3.16	5.23	8.68	11.23	14.58	21.10
	2:15:00	0.00	0.00	1.23	2.66	4.41	7.48	9.67	12.61	18.21
	2:20:00	0.00	0.00	1.01	2.18	3.63	6.29	8.15	10.69	15.40
	2:25:00	0.00	0.00	0.79	1.70	2.88	5.13	6.66	8.79	12.66
	2:30:00	0.00	0.00	0.58	1.23	2.16	3.98	5.19	6.89	9.94
	2:35:00	0.00	0.00	0.38	0.78	1.46	2.83	3.74	5.01	7.26
	2:40:00	0.00	0.00	0.22	0.48	1.02	1.74	2.35	3.23	4.85
	2:45:00	0.00	0.00	0.15	0.34	0.78	1.10	1.55	2.14	3.36
	2:50:00	0.00	0.00	0.11	0.26	0.61	0.71	1.05	1.45	2.37
	2:55:00	0.00	0.00	0.09	0.21	0.48	0.47	0.73	0.97	1.64
	3:00:00	0.00	0.00	0.07	0.16	0.38	0.30	0.49	0.62	1.11
	3:05:00	0.00	0.00	0.05	0.13	0.29	0.21	0.35	0.38	0.72
	3:10:00	0.00	0.00	0.04	0.10	0.22	0.14	0.23	0.21	0.44
	3:15:00	0.00	0.00	0.03	0.07	0.16	0.09	0.16	0.11	0.27
	3:20:00	0.00	0.00	0.03	0.05	0.11	0.06	0.12	0.08	0.19
	3:25:00	0.00	0.00	0.02	0.04	0.08	0.05	0.08	0.06	0.14
	3:30:00	0.00	0.00	0.02	0.03	0.06	0.03	0.06	0.05	0.11
	3:35:00	0.00	0.00	0.01	0.02	0.04	0.02	0.05	0.04	0.09
	3:40:00	0.00	0.00	0.01	0.01	0.03	0.02	0.04	0.03	0.07
	3:45:00	0.00	0.00	0.01	0.01	0.02	0.01	0.03	0.02	0.05
	3:50:00	0.00	0.00	0.00	0.01	0.01	0.01	0.02	0.01	0.03
	3:55:00	0.00	0.00	0.00	0.00	0.01	0.01	0.01	0.01	0.02
	4:00:00	0.00	0.00	0.00	0.00	0.00	0.00	0.01	0.00	0.01
	4:05:00	0.00	0.00	0.00	0.00	0.00	0.00	0.00	0.00	0.00
	4:10:00	0.00	0.00	0.00	0.00	0.00	0.00	0.00	0.00	0.00
	4:15:00	0.00	0.00	0.00	0.00	0.00	0.00	0.00	0.00	0.00
	4:20:00	0.00	0.00	0.00	0.00	0.00	0.00	0.00	0.00	0.00
	4:25:00	0.00	0.00	0.00	0.00	0.00	0.00	0.00	0.00	0.00
	4:30:00	0.00	0.00	0.00	0.00	0.00	0.00	0.00	0.00	0.00
	4:35:00	0.00	0.00	0.00	0.00	0.00	0.00	0.00	0.00	0.00
	4:40:00	0.00	0.00	0.00	0.00	0.00	0.00	0.00	0.00	0.00
	4:45:00	0.00	0.00	0.00	0.00	0.00	0.00	0.00	0.00	0.00
	4:50:00	0.00	0.00	0.00	0.00	0.00	0.00	0.00	0.00	0.00
	4:55:00	0.00	0.00	0.00	0.00	0.00	0.00	0.00	0.00	0.00
	5:00:00	0.00	0.00	0.00	0.00	0.00	0.00	0.00	0.00	0.00
	5:05:00	0.00	0.00	0.00	0.00	0.00	0.00	0.00	0.00	0.00
	5:10:00	0.00	0.00	0.00	0.00	0.00	0.00	0.00	0.00	0.00
	5:15:00	0.00	0.00	0.00	0.00	0.00	0.00	0.00	0.00	0.00
	5:20:00	0.00	0.00	0.00	0.00	0.00	0.00	0.00	0.00	0.00
	5:25:00	0.00	0.00	0.00	0.00	0.00	0.00	0.00	0.00	0.00
	5:30:00	0.00	0.00	0.00	0.00	0.00	0.00	0.00	0.00	0.00
	5:35:00	0.00	0.00	0.00	0.00	0.00	0.00	0.00	0.00	0.00
	5:40:00	0.00	0.00	0.00	0.00	0.00	0.00	0.00	0.00	0.00
	5:45:00	0.00	0.00	0.00	0.00	0.00	0.00	0.00	0.00	0.00
	5:50:00	0.00	0.00	0.00	0.00	0.00	0.00	0.00	0.00	0.00
	5:55:00	0.00	0.00	0.00	0.00	0.00	0.00	0.00	0.00	0.00
	6:00:00	0.00	0.00	0.00	0.00	0.00	0.00	0.00	0.00	0.00

DETENTION BASIN OUTLET STRUCTURE DESIGN

MHFD-Detention, Version 4.06 (July 2022)

Summary Stage-Area-Volume-Discharge Relationships

The user can create a summary S-A-V-D by entering the desired stage increments and the remainder of the table will populate automatically.
The user should graphically compare the summary S-A-V-D table to the full S-A-V-D table in the chart to confirm it captures all key transition points.

Stage - Storage Description	Stage [ft]	Area [ft^2]	Area [acres]	Volume [ft^3]	Volume [ac-ft]	Total Outflow [cfs]
	0.00	173	0.004	0	0.000	0.00
	1.00	1,719	0.039	838	0.019	0.02
	2.00	9,084	0.209	4,893	0.112	0.04
	3.00	22,994	0.528	20,642	0.474	0.28
	4.00	33,136	0.761	49,939	1.146	60.32
	5.00	38,308	0.879	85,672	1.967	66.23
	6.00	44,332	1.018	126,768	2.910	105.18
	7.00	51,031	1.172	174,506	4.006	268.50

For best results, include the stages of all grade slope changes (e.g. ISV and Floor) from the S-A-V table on Sheet 'Basin'.

Also include the inverts of all outlets (e.g. vertical orifice, overflow grate, and spillway, where applicable).

DETENTION BASI

MHFD

TITLE CHANGED TO INCLUDE POND. SEE POND A-2 FOR EXPLANATION ABOUT WQCV

Project: Overlook B1 Filing No. 1

Basin ID:

See comments on previous pond calc sheet

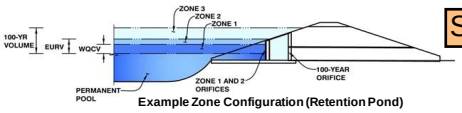

Example Zone Configuration (Retention Pond)

Watershed Information

Selected BMP Type =	EDB	
Watershed Area =	40.74	acres
Watershed Length =	3,000	ft
Watershed Length to Centroid =	1,500	ft
Watershed Slope =	0.045	ft/ft
Watershed Imperviousness =	10.00%	percent
Percentage Hydrologic Soil Group A =	0.0%	percent
Percentage Hydrologic Soil Group B =	100.0%	percent
Percentage Hydrologic Soil Groups C/D =	0.0%	percent
Target WQCV Drain Time =	40.0	hours
Location for 1-hr Rainfall Depths =	User Input	

After providing required inputs above including 1-hour rainfall depths, click 'Run CUHP' to generate runoff hydrographs using the embedded Colorado Urban Hydrograph Procedure.

			Optional User Overrides	
Water Quality Capture Volume (WQCV) =	0.048	acre-feet	0.048	acre-feet
Excess Urban Runoff Volume (EURV) =	0.383	acre-feet		acre-feet
2-yr Runoff Volume (P1 = 1.19 in.) =	0.544	acre-feet	1.19	inches
5-yr Runoff Volume (P1 = 1.5 in.) =	1.202	acre-feet	1.50	inches
10-yr Runoff Volume (P1 = 1.75 in.) =	1.858	acre-feet	1.75	inches
25-yr Runoff Volume (P1 = 2 in.) =	3.027	acre-feet	2.00	inches
50-yr Runoff Volume (P1 = 2.25 in.) =	3.825	acre-feet	2.25	inches
100-yr Runoff Volume (P1 = 2.52 in.) =	4.973	acre-feet	2.52	inches
500-yr Runoff Volume (P1 = 3.14 in.) =	7.066	acre-feet		inches
Approximate 2-yr Detention Volume =	0.244	acre-feet		
Approximate 5-yr Detention Volume =	0.383	acre-feet		
Approximate 10-yr Detention Volume =	0.796	acre-feet		
Approximate 25-yr Detention Volume =	1.112	acre-feet		
Approximate 50-yr Detention Volume =	1.163	acre-feet		
Approximate 100-yr Detention Volume =	1.503	acre-feet		

Define Zones and Basin Geometry

Zone 1 Volume (WQCV) =	0.048	acre-feet
Zone 2 Volume (EURV - Zone 1) =	0.335	acre-feet
Zone 3 Volume (100-year - Zones 1 & 2) =	1.120	acre-feet
Total Detention Basin Volume =	1.503	acre-feet
Initial Surcharge Volume (ISV) =	user	ft^3
Initial Surcharge Depth (ISD) =	user	ft
Total Available Detention Depth (H_{total}) =	user	ft
Depth of Trickle Channel (H_{TC}) =	user	ft
Slope of Trickle Channel (S_{TC}) =	user	ft/ft
Slopes of Main Basin Sides (S_{main}) =	user	H:V
Basin Length-to-Width Ratio ($R_{L/W}$) =	user	
Initial Surcharge Area (A_{ISV}) =	user	ft^2
Surcharge Volume Length (L_{ISV}) =	user	ft
Surcharge Volume Width (W_{ISV}) =	user	ft
Depth of Basin Floor (H_{FLOOR}) =	user	ft
Length of Basin Floor (L_{FLOOR}) =	user	ft
Width of Basin Floor (W_{FLOOR}) =	user	ft
Area of Basin Floor (A_{FLOOR}) =	user	ft^2
Volume of Basin Floor (V_{FLOOR}) =	user	ft^3
Depth of Main Basin (H_{MAIN}) =	user	ft
Length of Main Basin (L_{MAIN}) =	user	ft
Width of Main Basin (W_{MAIN}) =	user	ft
Area of Main Basin (A_{MAIN}) =	user	ft^2
Volume of Main Basin (V_{MAIN}) =	user	ft^3
Calculated Total Basin Volume (V_{total}) =	user	acre-feet

Depth Increment = ft

Stage - Storage Description	Stage (ft)	Optional Override Stage (ft)	Length (ft)	Width (ft)	Area (ft^2)	Optional Override Area (ft^2)	Area (acre)	Volume (ft^3)	Volume (ac-ft)
Top of Micropool	--	0.00	--	--	--	139	0.003		
	--	0.25	--	--	--	223	0.005	45	0.001
	--	1.00	--	--	--	1,816	0.042	810	0.019
	--	2.00	--	--	--	9,806	0.225	6,621	0.152
	--	3.00	--	--	--	20,473	0.470	21,760	0.500
	--	4.00	--	--	--	30,839	0.708	47,416	1.089
	--	5.00	--	--	--	38,709	0.889	82,190	1.887
	--	6.00	--	--	--	46,803	1.074	124,946	2.868

Fill out stage column

STAGE ELEVATIONS ADDED TO SHEET

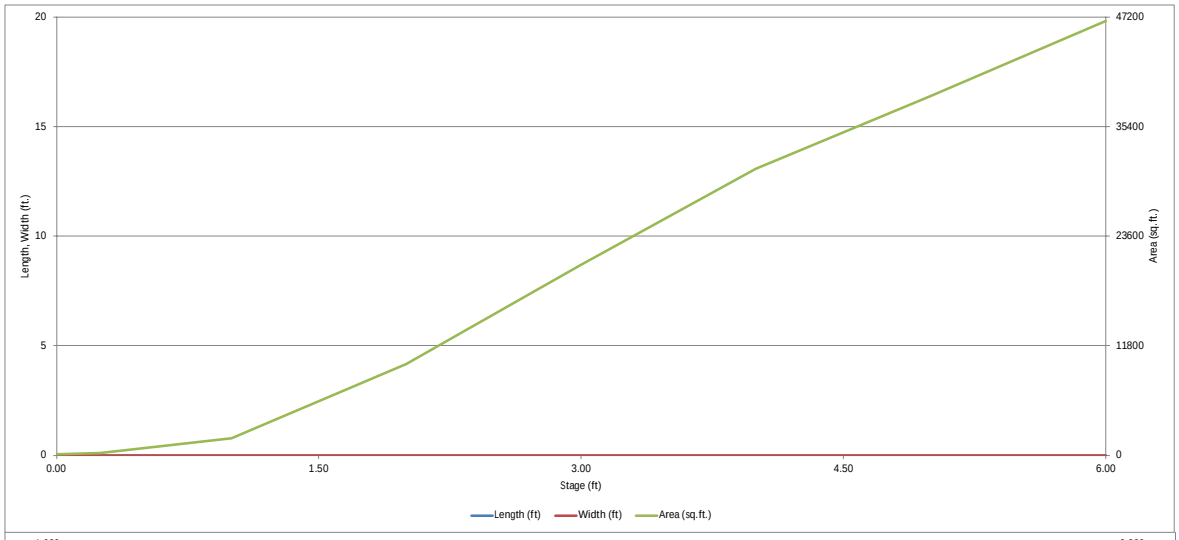
20
15
10
5
0
Length, Width (ft.)
47200
35400
23600
11800
0
Area (sq. ft.)
0.00
1.50
3.00
4.50
6.00
Stage (ft)
Length (ft)
Width (ft)
Area (sq.ft.)

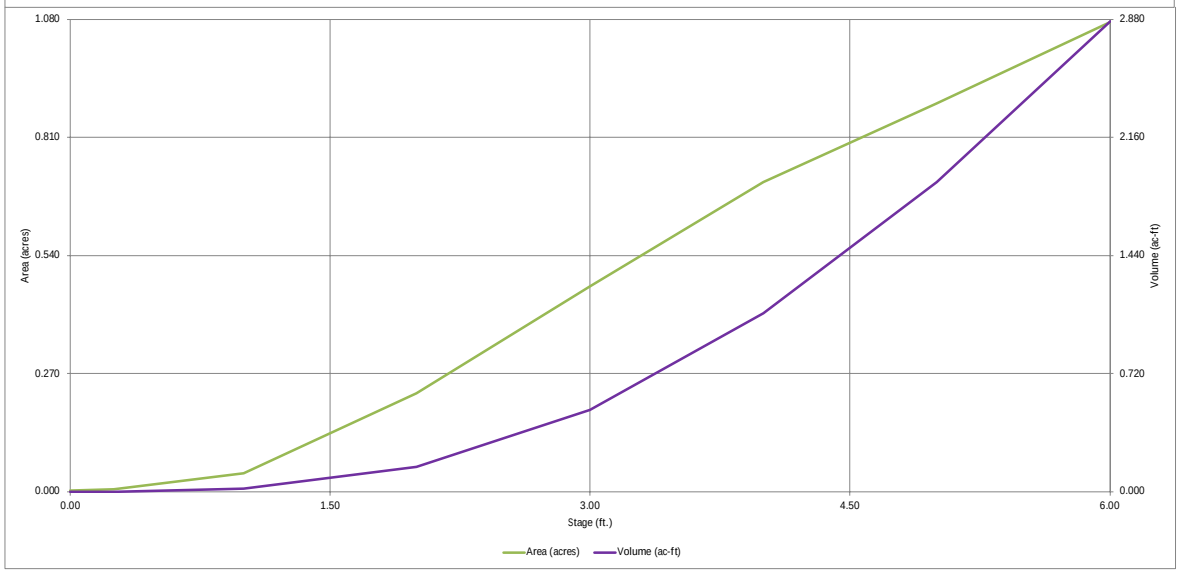
1.080
0.810
0.540
0.270
0.000
Area (acres)
2.880
2.160
1.440
0.720
0.000
Volume (ac-ft)
0.00
1.50
3.00
4.50
6.00
Stage (ft.)
Area (acres)
Volume (ac-ft)

✓ = calcs match details in plans

X = calcs do not match details in plans

NOTED

DETENTION BASIN OUTLET STRUCTURE DESIGN

MHFD-Detention, Version 4.06 (July 2022)

Project: Overlook B1 Filing No. 1

Basin ID:

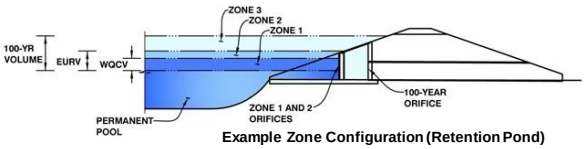

Example Zone Configuration (Retention Pond)

	Estimated Stage (ft)	Estimated Volume (ac-ft)	Outlet Type
Zone 1 (WQCV)	1.39	0.048	Orifice Plate
Zone 2 (EURV)	2.74	0.335	Rectangular Orifice
Zone 3 (100-year)	4.55	1.120	Weir&Pipe (Restrict)
Total (all zones)		1.503	

User Input: Orifice at Underdrain Outlet (typically used to drain WQCV in a Filtration BMP)

Underdrain Orifice Invert Depth =	N/A	ft (distance below the filtration media surface)	Underdrain Orifice Area =	N/A	ft^2
Underdrain Orifice Diameter =	N/A	inches	Underdrain Orifice Centroid =	N/A	feet

Calculated Parameters for Underdrain

User Input: Orifice Plate with one or more orifices or Elliptical Slot Weir (typically used to drain WQCV and/or EURV in a sedimentation BMP)

Centroid of Lowest Orifice =	0.00	ft (relative to basin bottom at Stage = 0 ft)	WQ Orifice Area per Row =	1.736E-03	ft^2
Depth at top of Zone using Orifice Plate =	1.39 ✓	ft (relative to basin bottom at Stage = 0 ft)	Elliptical Half-Width =	N/A	feet
Orifice Plate: Orifice Vertical Spacing =	5.60 ✓	inches	Elliptical Slot Centroid =	N/A	feet
Orifice Plate: Orifice Area per Row =	0.25 ✓	sq. inches (diameter = 9/16 inch)	Elliptical Slot Area =	N/A	ft^2

Calculated Parameters for Plate

User Input: Stage and Total Area of Each Orifice Row (numbered from lowest to highest)

	Row 1 (required)	Row 2 (optional)	Row 3 (optional)	Row 4 (optional)	Row 5 (optional)	Row 6 (optional)	Row 7 (optional)	Row 8 (optional)
Stage of Orifice Centroid (ft)	0.00 ✓	0.46 ✓	0.93 ✓					
Orifice Area (sq. inches)	0.25 ✓	0.25 ✓	0.25 ✓					

	Row 9 (optional)	Row 10 (optional)	Row 11 (optional)	Row 12 (optional)	Row 13 (optional)	Row 14 (optional)	Row 15 (optional)	Row 16 (optional)
Stage of Orifice Centroid (ft)								
Orifice Area (sq. inches)								

User Input: Vertical Orifice (Circular or Rectangular)

	Zone 2 Rectangular	Not Selected	
Invert of Vertical Orifice =	1.39 ✓	N/A	ft (relative to basin bottom at Stage = 0 ft)
Depth at top of Zone using Vertical Orifice =	2.74 ✓	N/A	ft (relati
Vertical Orifice Height =	2.00 ✓	N/A	inches
Vertical Orifice Width =	2.25 ✓		inches

Calculated Parameters for Vertical Orifice

	Zone 2 Rectangular	Not Selected	
Vertical Orifice Area =	0.03	N/A	ft^2
Vertical Orifice Centroid =	0.08	N/A	feet

THE 6' DIMENSION REPRESENTS OUTSIDE TO OUTSIDE. NOT THE LENGHT OF WEIR. DIMENSION ADJUSTED ON PLAN SHEETS TO PROVIDE CLARITY

User Input: Overflow Weir (Dropbox with Flat or Sloped Grate and Outlet Pipe OR Rectangular/Tra

	Zone 3 Weir	Not Selected	
Overflow Weir Front Edge Height, Ho =	2.75 ✓	N/A	ft (relati
Overflow Weir Front Edge Length =	23.00 ✓	N/A	feet
Overflow Weir Grate Slope =	10.00 ✓	N/A	H:V
Horiz. Length of Weir Sides =	5.00 X	N/A	feet
Overflow Grate Type =	Type C Grate	N/A	
Debris Clogging % =	50% ✓	N/A	%

6'

Calculated Parameters for Overflow Weir

	Zone 3 Weir	Not Selected	
	3.25	N/A	feet
	5.02	N/A	feet
Grate Open Area / 100-yr Orifice Area =	16.07	N/A	
Overflow Grate Open Area w/o Debris =	80.44	N/A	ft^2
Overflow Grate Open Area w/ Debris =	40.22	N/A	ft^2

User Input: Outlet Pipe w/ Flow Restriction Plate (Circular Orifice, Restrictor Plate, or Rectangular Orifice)

	Zone 3 Restrictor	Not Selected	
Depth to Invert of Outlet Pipe =	1.42	N/A	ft (distance below basin bottom at Stage = 0 ft)
Outlet Pipe Diameter =	36.00	N/A	inches
Restrictor Plate Height Above Pipe Invert =	24.00		inches

1.58'

NOTED. DEPTH OF PIPE UPDATED

Calculated Parameters for Outlet Pipe w/ Flow Restriction Plate

	Zone 3 Restrictor	Not Selected	
Outlet Orifice Area =	5.01	N/A	ft^2
Outlet Orifice Centroid =	1.12	N/A	feet
Half-Central Angle of Restrictor Plate on Pipe =	1.91	N/A	radians

User Input: Emergency Spillway (Rectangular or Trapezoidal)

Spillway Invert Stage=	4.00 ✓	ft (relative to basin	
Spillway Crest Length =	30.00 ✓	feet	
Spillway End Slopes =	4.00 ✓	H:V	
Freeboard above Max Water Surface =	1.00 ✓	feet	

Calculated Parameters for Spillway

pillway Design Flow Depth=	0.61	feet
Stage at Top of Freeboard =	5.61	feet
Basin Area at Top of Freeboard =	1.00	acres
Basin Volume at Top of Freeboard =	2.46	acre-ft

Routed Hydrograph Results

The user can override the default CUHP hydrographs and runoff volumes by entering new values in the Inflow Hydrographs table (Columns W through AF).

Design Storm Return Period =	WQCV	EURV	2 Year	5 Year	10 Year	25 Year	50 Year	100 Year	500 Year
One-Hour Rainfall Depth (in) =	N/A	N/A	1.19	1.50	1.75	2.00	2.25	2.52	3.14
CUHP Runoff Volume (acre-ft) =	0.048	0.383	0.544	1.202	1.858	3.027	3.825	4.973	7.066
Inflow Hydrograph Volume (acre-ft) =	N/A	N/A	0.544	1.202	1.858	3.027	3.825	4.973	7.066
CUHP Predevelopment Peak Q (cfs) =	N/A	N/A	3.5	9.8	14.9	27.3	34.3	43.9	61.4
OPTIONAL Override Predevelopment Peak Q (cfs) =	N/A	N/A							
Predevelopment Unit Peak Flow, q (cfs/acre) =	N/A	N/A	0.09	0.24	0.37	0.67	0.84	1.08	1.51
Peak Inflow Q (cfs) =	N/A	N/A	5.7	12.2	17.4	29.6	36.6	46.3	64.0
Peak Outflow Q (cfs) =	0.0	0.2	1.2	7.1	12.7	25.1	32.1	42.5	57.1
Ratio Peak Outflow to Predevelopment Q =	N/A	N/A	N/A	0.7	0.9	0.9	0.9	1.0	0.9
Structure Controlling Flow =	Plate	Vertical Orifice 1	Overflow Weir 1	Overflow Weir 1	Overflow Weir 1	Overflow Weir 1	Overflow Weir 1	Overflow Weir 1	Spillway
Max Velocity through Grate 1 (fps) =	N/A	N/A	0.01	0.1	0.2	0.3	0.4	0.5	0.6
Max Velocity through Grate 2 (fps) =	N/A	N/A	N/A	N/A	N/A	N/A	N/A	N/A	N/A
Time to Drain 97% of Inflow Volume (hours) =	37	56	56	44	34	27	24	21	16
Time to Drain 99% of Inflow Volume (hours) =	40	65	67	60	55	47	43	37	30
Maximum Ponding Depth (ft) =	1.39	2.74	2.84	3.09	3.23	3.49	3.61	3.77	4.17
Area at Maximum Ponding Depth (acres) =	0.11	0.41	0.43	0.49	0.52	0.58	0.61	0.65	0.74
Maximum Volume Stored (acre-ft) =	0.049	0.386	0.427	0.538	0.614	0.753	0.824	0.932	1.204

DETENTION BASIN OUTLET STRUCTURE DESIGN

MHFD-Detention, Version 4.06 (July 2022)

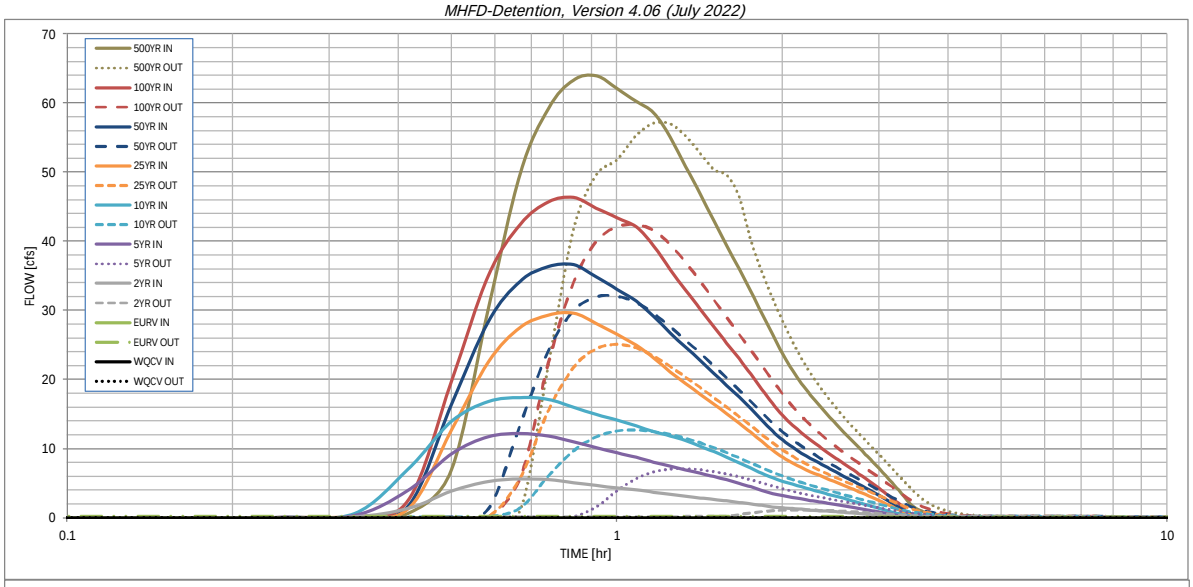

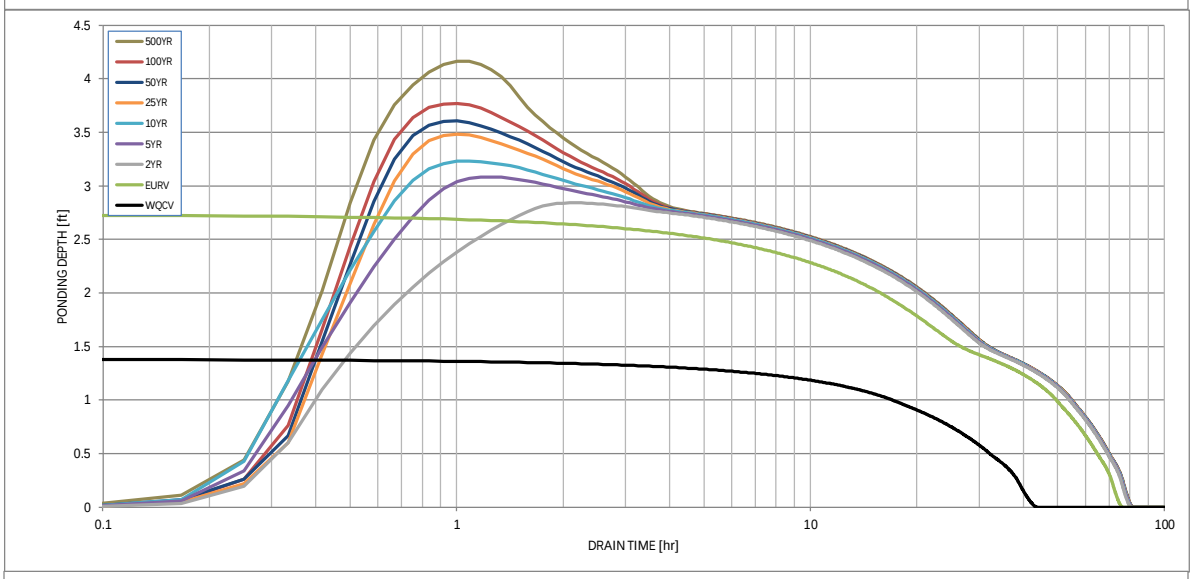

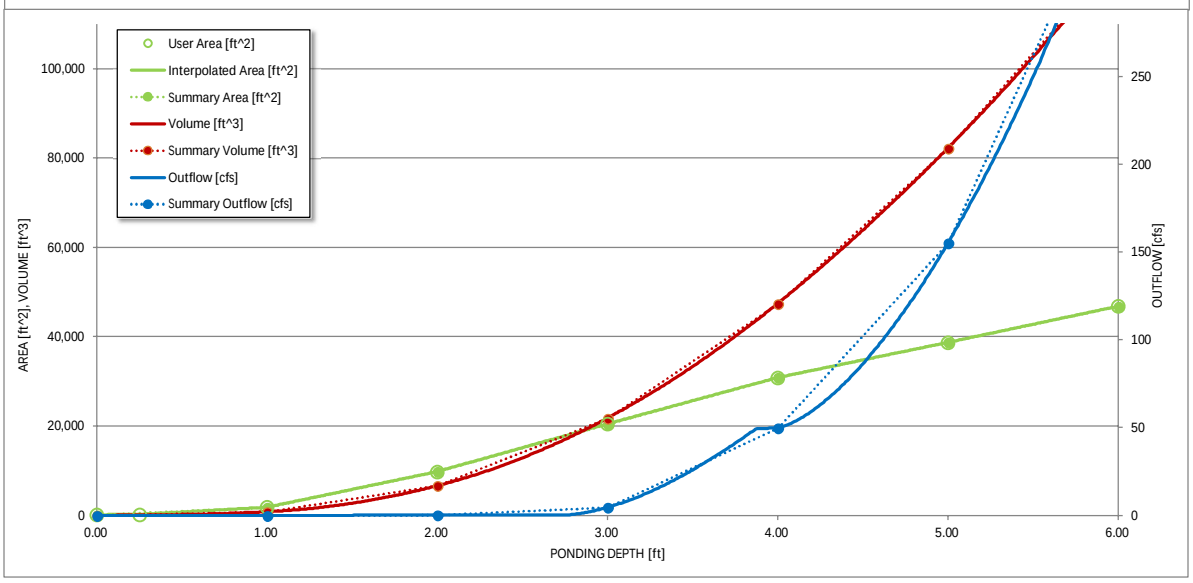

S-A-V-D Chart Axis Override	X-axis	Left Y-Axis	Right Y-Axis
minimum bound			
maximum bound			

DETENTION BASIN OUTLET STRUCTURE DESIGN

Outflow Hydrograph Workbook Filename:

Inflow Hydrographs

The user can override the calculated inflow hydrographs from this workbook with inflow hydrographs developed in a separate program.

	SOURCE	CUHP	CUHP	CUHP	CUHP	CUHP	CUHP	CUHP	CUHP	CUHP
Time Interval	TIME	WQCV [cfs]	EURV [cfs]	2 Year [cfs]	5 Year [cfs]	10 Year [cfs]	25 Year [cfs]	50 Year [cfs]	100 Year [cfs]	500 Year [cfs]
5.00 min	0:00:00	0.00	0.00	0.00	0.00	0.00	0.00	0.00	0.00	0.00
	0:05:00	0.00	0.00	0.00	0.00	0.00	0.00	0.00	0.00	0.00
	0:10:00	0.00	0.00	0.00	0.00	0.00	0.00	0.00	0.00	0.01
	0:15:00	0.00	0.00	0.04	0.06	0.08	0.05	0.07	0.06	0.10
	0:20:00	0.00	0.00	0.16	0.38	0.67	0.16	0.19	0.20	0.64
	0:25:00	0.00	0.00	1.35	3.97	7.07	1.29	1.70	2.47	6.93
	0:30:00	0.00	0.00	3.86	9.27	13.97	12.65	16.36	19.74	30.33
	0:35:00	0.00	0.00	5.29	11.75	16.83	22.58	28.46	35.13	49.93
	0:40:00	0.00	0.00	5.65	12.20	17.45	27.58	34.29	42.45	59.26
	0:45:00	0.00	0.00	5.51	11.82	17.14	29.34	36.35	45.72	63.33
	0:50:00	0.00	0.00	5.12	11.02	16.04	29.61	36.63	46.35	63.97
	0:55:00	0.00	0.00	4.70	10.15	14.99	28.14	34.89	44.84	62.10
	1:00:00	0.00	0.00	4.37	9.44	14.13	26.53	33.07	43.41	60.28
	1:05:00	0.00	0.00	4.07	8.75	13.30	25.01	31.34	42.11	58.61
	1:10:00	0.00	0.00	3.73	8.08	12.49	23.15	29.15	39.33	55.06
	1:15:00	0.00	0.00	3.41	7.48	11.88	21.13	26.76	35.96	50.87
	1:20:00	0.00	0.00	3.15	6.97	11.20	19.44	24.69	32.97	46.87
	1:25:00	0.00	0.00	2.91	6.47	10.40	17.91	22.77	30.21	43.02
	1:30:00	0.00	0.00	2.69	6.00	9.59	16.45	20.93	27.65	39.40
	1:35:00	0.00	0.00	2.47	5.52	8.78	15.05	19.16	25.29	36.03
	1:40:00	0.00	0.00	2.25	5.02	7.98	13.71	17.46	23.00	32.78
	1:45:00	0.00	0.00	2.03	4.50	7.21	12.38	15.79	20.79	29.64
	1:50:00	0.00	0.00	1.81	3.99	6.45	11.08	14.15	18.62	26.59
	1:55:00	0.00	0.00	1.61	3.55	5.80	9.81	12.56	16.55	23.72
	2:00:00	0.00	0.00	1.46	3.23	5.30	8.75	11.25	14.81	21.35
	2:05:00	0.00	0.00	1.35	2.98	4.89	7.95	10.24	13.46	19.44
	2:10:00	0.00	0.00	1.25	2.76	4.50	7.29	9.39	12.31	17.77
	2:15:00	0.00	0.00	1.15	2.54	4.14	6.70	8.62	11.27	16.27
	2:20:00	0.00	0.00	1.06	2.34	3.79	6.16	7.92	10.34	14.90
	2:25:00	0.00	0.00	0.97	2.14	3.46	5.66	7.27	9.46	13.62
	2:30:00	0.00	0.00	0.89	1.95	3.14	5.18	6.65	8.64	12.42
	2:35:00	0.00	0.00	0.80	1.76	2.83	4.72	6.05	7.88	11.31
	2:40:00	0.00	0.00	0.72	1.57	2.53	4.27	5.47	7.15	10.24
	2:45:00	0.00	0.00	0.64	1.39	2.25	3.83	4.90	6.42	9.19
	2:50:00	0.00	0.00	0.56	1.21	1.97	3.38	4.34	5.70	8.15
	2:55:00	0.00	0.00	0.48	1.03	1.69	2.94	3.78	4.98	7.12
	3:00:00	0.00	0.00	0.40	0.86	1.42	2.51	3.22	4.25	6.08
	3:05:00	0.00	0.00	0.32	0.68	1.15	2.07	2.67	3.53	5.05
	3:10:00	0.00	0.00	0.24	0.51	0.87	1.63	2.11	2.82	4.03
	3:15:00	0.00	0.00	0.16	0.34	0.61	1.20	1.56	2.10	3.01
	3:20:00	0.00	0.00	0.10	0.21	0.42	0.78	1.03	1.41	2.07
	3:25:00	0.00	0.00	0.06	0.14	0.31	0.48	0.66	0.92	1.41
	3:30:00	0.00	0.00	0.04	0.11	0.25	0.31	0.45	0.62	0.99
	3:35:00	0.00	0.00	0.03	0.08	0.20	0.20	0.31	0.42	0.69
	3:40:00	0.00	0.00	0.03	0.07	0.16	0.13	0.21	0.27	0.47
	3:45:00	0.00	0.00	0.02	0.05	0.12	0.09	0.15	0.17	0.32
	3:50:00	0.00	0.00	0.02	0.04	0.09	0.06	0.10	0.10	0.20
	3:55:00	0.00	0.00	0.01	0.03	0.07	0.04	0.07	0.05	0.12
	4:00:00	0.00	0.00	0.01	0.02	0.05	0.03	0.05	0.03	0.08
	4:05:00	0.00	0.00	0.01	0.02	0.03	0.02	0.04	0.03	0.06
	4:10:00	0.00	0.00	0.01	0.01	0.02	0.01	0.03	0.02	0.05
	4:15:00	0.00	0.00	0.01	0.01	0.02	0.01	0.02	0.02	0.04
	4:20:00	0.00	0.00	0.00	0.01	0.01	0.01	0.02	0.01	0.03
	4:25:00	0.00	0.00	0.00	0.00	0.01	0.01	0.01	0.01	0.02
	4:30:00	0.00	0.00	0.00	0.00	0.01	0.00	0.01	0.01	0.01
	4:35:00	0.00	0.00	0.00	0.00	0.00	0.00	0.00	0.00	0.01
	4:40:00	0.00	0.00	0.00	0.00	0.00	0.00	0.00	0.00	0.00
	4:45:00	0.00	0.00	0.00	0.00	0.00	0.00	0.00	0.00	0.00
	4:50:00	0.00	0.00	0.00	0.00	0.00	0.00	0.00	0.00	0.00
	4:55:00	0.00	0.00	0.00	0.00	0.00	0.00	0.00	0.00	0.00
	5:00:00	0.00	0.00	0.00	0.00	0.00	0.00	0.00	0.00	0.00
	5:05:00	0.00	0.00	0.00	0.00	0.00	0.00	0.00	0.00	0.00
	5:10:00	0.00	0.00	0.00	0.00	0.00	0.00	0.00	0.00	0.00
	5:15:00	0.00	0.00	0.00	0.00	0.00	0.00	0.00	0.00	0.00
	5:20:00	0.00	0.00	0.00	0.00	0.00	0.00	0.00	0.00	0.00
	5:25:00	0.00	0.00	0.00	0.00	0.00	0.00	0.00	0.00	0.00
	5:30:00	0.00	0.00	0.00	0.00	0.00	0.00	0.00	0.00	0.00
	5:35:00	0.00	0.00	0.00	0.00	0.00	0.00	0.00	0.00	0.00
	5:40:00	0.00	0.00	0.00	0.00	0.00	0.00	0.00	0.00	0.00
	5:45:00	0.00	0.00	0.00	0.00	0.00	0.00	0.00	0.00	0.00
	5:50:00	0.00	0.00	0.00	0.00	0.00	0.00	0.00	0.00	0.00
	5:55:00	0.00	0.00	0.00	0.00	0.00	0.00	0.00	0.00	0.00
	6:00:00	0.00	0.00	0.00	0.00	0.00	0.00	0.00	0.00	0.00

DETENTION BASIN OUTLET STRUCTURE DESIGN

MHFD-Detention, Version 4.06 (July 2022)

Summary Stage-Area-Volume-Discharge Relationships

The user can create a summary S-A-V-D by entering the desired stage increments and the remainder of the table will populate automatically.
The user should graphically compare the summary S-A-V-D table to the full S-A-V-D table in the chart to confirm it captures all key transition points.

Stage - Storage Description	Stage [ft]	Area [ft^2]	Area [acres]	Volume [ft^3]	Volume [ac-ft]	Total Outflow [cfs]
	0.00	139	0.003	0	0.000	0.00
	1.00	1,816	0.042	810	0.019	0.02
	2.00	9,806	0.225	6,621	0.152	0.14
	3.00	20,473	0.470	21,760	0.500	4.54
	4.00	30,839	0.708	47,416	1.089	49.96
	5.00	38,709	0.889	82,190	1.887	155.07
	6.00	46,803	1.074	124,946	2.868	369.35

For best results, include the stages of all grade slope changes (e.g. ISV and Floor) from the S-A-V table on Sheet 'Basin'.

Also include the inverts of all outlets (e.g. vertical orifice, overflow grate, and spillway, where applicable).

TITLE CHANGED TO INCLUDE POND. SEE POND A-2 FOR EXPLANATION ABOUT WQCV

DETENTION BASIN STAGE-STOR

MHFD-Detention, Version 4.06

Project: Overlook Pond B8- Filing No. 1

Basin ID: B6 & B8

See comments on first pond spreadsheet

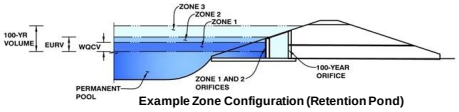

Example Zone Configuration (Retention Pond)

Watershed Information

Selected BMP Type =	EDB	
Watershed Area =	62.83	acres
Watershed Length =	4,000	ft
Watershed Length to Centroid =	2,000	ft
Watershed Slope =	0.050	ft/ft
Watershed Imperviousness =	9.00%	percent
Percentage Hydrologic Soil Group A =	0.0%	percent
Percentage Hydrologic Soil Group B =	100.0%	percent
Percentage Hydrologic Soil Groups C/D =	0.0%	percent
Target WQCV Drain Time =	40.0	hours
Location for 1-hr Rainfall Depths =	User Input	

After providing required inputs above including 1-hour rainfall depths, click 'Run CUHP' to generate runoff hydrographs using the embedded Colorado Urban Hydrograph Procedure.

			Optional User Overrides	
Water Quality Capture Volume (WQCV) =	0.069	acre-feet	0.069	acre-feet
Excess Urban Runoff Volume (EURV) =	0.527	acre-feet		acre-feet
2-yr Runoff Volume (P1 = 1.19 in.) =	0.793	acre-feet	1.19	inches
5-yr Runoff Volume (P1 = 1.5 in.) =	1.795	acre-feet	1.50	inches
10-yr Runoff Volume (P1 = 1.75 in.) =	2.801	acre-feet	1.75	inches
25-yr Runoff Volume (P1 = 2 in.) =	4.614	acre-feet	2.00	inches
50-yr Runoff Volume (P1 = 2.25 in.) =	5.843	acre-feet	2.25	inches
100-yr Runoff Volume (P1 = 2.52 in.) =	7.619	acre-feet	2.52	inches
500-yr Runoff Volume (P1 = 3.14 in.) =	10.846	acre-feet		inches
Approximate 2-yr Detention Volume =	0.333	acre-feet		
Approximate 5-yr Detention Volume =	0.527	acre-feet		
Approximate 10-yr Detention Volume =	1.146	acre-feet		
Approximate 25-yr Detention Volume =	1.628	acre-feet		
Approximate 50-yr Detention Volume =	1.697	acre-feet		
Approximate 100-yr Detention Volume =	2.207	acre-feet		

Define Zones and Basin Geometry

Zone 1 Volume (WQCV) =	0.069	acre-feet
Zone 2 Volume (EURV - Zone 1) =	0.458	acre-feet
Zone 3 Volume (100-year - Zones 1 & 2) =	1.680	acre-feet
Total Detention Basin Volume =	2.207	acre-feet
Initial Surcharge Volume (ISV) =	user	ft^3
Initial Surcharge Depth (ISD) =	user	ft
Total Available Detention Depth (H_{total}) =	user	ft
Depth of Trickle Channel (H_{TC}) =	user	ft
Slope of Trickle Channel (S_{TC}) =	user	ft/ft
Slopes of Main Basin Sides (S_{main}) =	user	H:V
Basin Length-to-Width Ratio ($R_{L/W}$) =	user	
Initial Surcharge Area (A_{ISV}) =	user	ft^2
Surcharge Volume Length (L_{ISV}) =	user	ft
Surcharge Volume Width (W_{ISV}) =	user	ft
Depth of Basin Floor (H_{FLOOR}) =	user	ft
Length of Basin Floor (L_{FLOOR}) =	user	ft
Width of Basin Floor (W_{FLOOR}) =	user	ft
Area of Basin Floor (A_{FLOOR}) =	user	ft^2
Volume of Basin Floor (V_{FLOOR}) =	user	ft^3
Depth of Main Basin (H_{MAIN}) =	user	ft
Length of Main Basin (L_{MAIN}) =	user	ft
Width of Main Basin (W_{MAIN}) =	user	ft
Area of Main Basin (A_{MAIN}) =	user	ft^2
Volume of Main Basin (V_{MAIN}) =	user	ft^3
Calculated Total Basin Volume (V_{total}) =	user	acre-feet

Depth Increment = 1.00 ft

	Stage - Storage Description	Stage (ft)	Optional Override Stage (ft)	Length (ft)	Width (ft)	Area (ft^2)	Optional Override Area (ft^2)	Area (acre)	Volume (ft^3)	Volume (ac-ft)
7186	Top of Micropool	--	0.00	--	--	--	180	0.004		
	7187	--	1.00	--	--	--	812	0.019	496	0.011
	7188	--	2.00	--	--	--	7,385	0.170	4,594	0.105
	7189	--	3.00	--	--	--	21,644	0.497	19,109	0.439
	7190	--	4.00	--	--	--	30,169	0.693	45,015	1.033
	7191	--	5.00	--	--	--	35,429	0.813	77,814	1.786
	7192	--	6.00	--	--	--	40,734	0.935	115,896	2.661
	7193	--	7.00	--	--	--	46,264	1.062	159,395	3.659
	7194	--	8.00	--	--	--	48,000	1.102	206,526	4.741

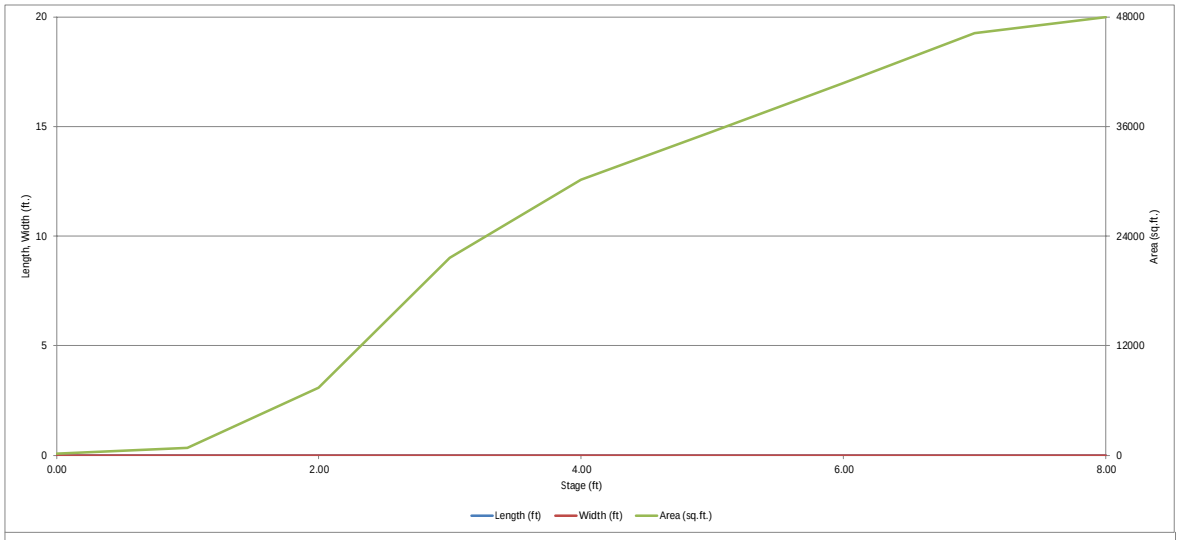
20
15
10
5
0
Length, Width (ft.)
48000
36000
24000
12000
0
Area (sq.ft.)
0.00
2.00
4.00
6.00
8.00
Stage (ft)
Length (ft)
Width (ft)
Area (sq.ft.)

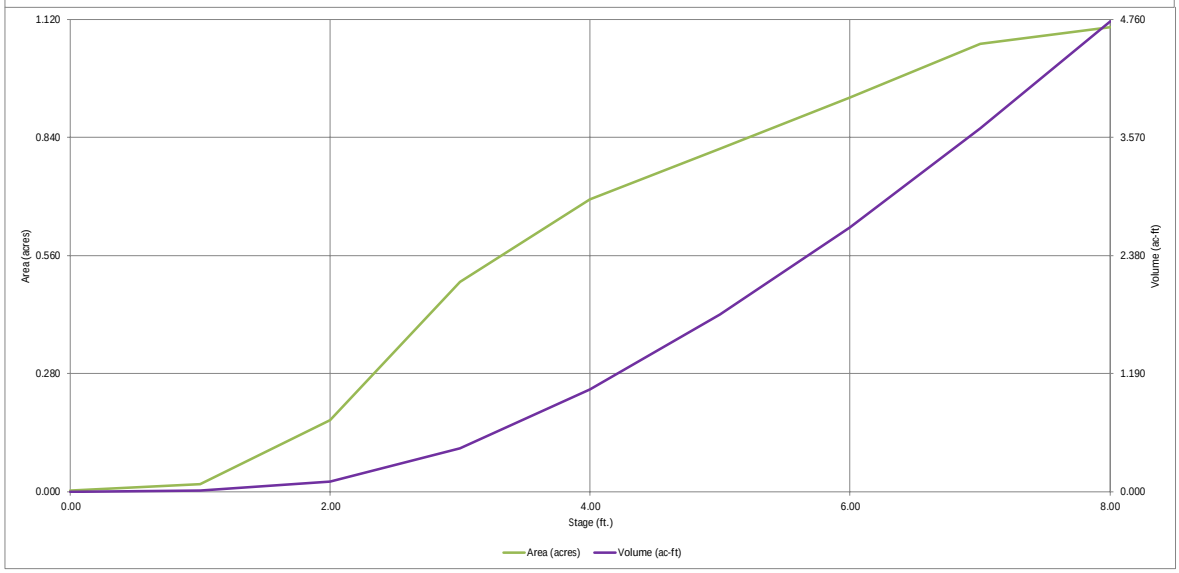
1.120
0.840
0.560
0.280
0.000
Area (acres)
4.760
3.570
2.380
1.190
0.000
Volume (ac-ft)
0.00
2.00
4.00
6.00
8.00
Stage (ft.)
Area (acres)
Volume (ac-ft)

✓ = calcs match details in plans

X = calcs do not match details in plans

NOTED

DETENTION BASIN OUTLET STRUCTURE DESIGN

MHFD-Detention, Version 4.06 (July 2022)

Project: Overlook Pond B8- Filing No. 1

Basin ID: B6 & B8

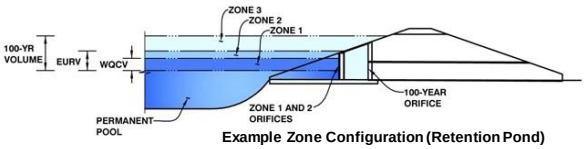

Example Zone Configuration (Retention Pond)

	Estimated Stage (ft)	Estimated Volume (ac-ft)	Outlet Type
Zone 1 (WQCV)	1.76	0.069	Orifice Plate
Zone 2 (EURV)	3.18	0.458	Rectangular Orifice
Zone 3 (100-year)	5.50	1.680	Weir&Pipe (Restrict)
Total (all zones)		2.207	

User Input: Orifice at Underdrain Outlet (typically used to drain WQCV in a Filtration BMP)

Underdrain Orifice Invert Depth =	N/A	ft (distance below the filtration media surface)
Underdrain Orifice Diameter =	N/A	inches

Calculated Parameters for Underdrain

Underdrain Orifice Area =	N/A	ft^2
Underdrain Orifice Centroid =	N/A	feet

User Input: Orifice Plate with one or more orifices or Elliptical Slot Weir (typically used to drain WQCV and/or EURV in a sedimentation BMP)

Centroid of Lowest Orifice =	0.00	ft (relative to basin bottom at Stage = 0 ft)
Depth at top of Zone using Orifice Plate =	1.76 ✓	ft (relative to basin bottom at Stage = 0 ft)
Orifice Plate: Orifice Vertical Spacing =	12.70 ✓	inches
Orifice Plate: Orifice Area per Row =	0.31 ✓	sq. inches (diameter = 5/8 inch)

Calculated Parameters for Plate

WQ Orifice Area per Row =	2.153E-03	ft^2
Elliptical Half-Width =	N/A	feet
Elliptical Slot Centroid =	N/A	feet
Elliptical Slot Area =	N/A	ft^2

User Input: Stage and Total Area of Each Orifice Row (numbered from lowest to highest)

	Row 1 (required)	Row 2 (optional)	Row 3 (optional)	Row 4 (optional)	Row 5 (optional)	Row 6 (optional)	Row 7 (optional)	Row 8 (optional)
Stage of Orifice Centroid (ft)	0.00 ✓	0.59 ✓	1.17 ✓					
Orifice Area (sq. inches)	0.31 ✓	0.31 ✓	0.31 ✓					

	Row 9 (optional)	Row 10 (optional)	Row 11 (optional)	Row 12 (optional)	Row 13 (optional)	Row 14 (optional)	Row 15 (optional)	Row 16 (optional)
Stage of Orifice Centroid (ft)								
Orifice Area (sq. inches)								

User Input: Vertical Orifice (Circular or Rectangular)

	Zone 2 Rectangular	Not Selected	
Invert of Vertical Orifice =	1.76 ✓	N/A	ft (relative to basin bottom at Stage = 0 ft)
Depth at top of Zone using Vertical Orifice =	3.18 ✓	N/A	ft (relative to basin bottom at Stage = 0 ft)
Vertical Orifice Height =	2.00 ✓	N/A	inches
Vertical Orifice Width =	3.00 ✓		inches

Calculated Parameters for Vertical Orifice

	Zone 2 Rectangular	Not Selected	
Vertical Orifice Area =	0.04	N/A	ft^2
Vertical Orifice Centroid =	0.08	N/A	feet

User Input: Overflow Weir (Dropbox with Flat or Sloped Grate and Outlet Pipe OR Rectangular/Trapezoidal Weir and No Outlet Pipe)

	Zone 3 Weir	Not Selected	
Overflow Weir Front Edge Height, Ho =	3.20 ✓	N/A	ft (relative to basin bottom at Stage = 0 ft)
Overflow Weir Front Edge Length =	23.00 ✓	N/A	feet
Overflow Weir Grate Slope =	10.00 ✓	N/A	H:V
Horiz. Length of Weir Sides =	5.00	N/A	feet
Overflow Grate Type =	Type C Grate	N/A	
Debris Clogging % =	50% ✓	N/A	%

6'

THE 6' DIMENSION REPRESENTS OUTSIDE TO OUTSIDE. NOT THE LENGHT OF WEIR. DIMENSION ADJUSTED ON PLAN SHEETS TO PROVIDE CLARITY

Calculated Parameters for Overflow Weir

	Zone 3 Weir	Not Selected	
Height of Grate Upper Edge, H_t =	3.70	N/A	feet
Overflow Weir Slope Length =	5.02	N/A	feet
Grate Open Area / 100-yr Orifice Area =	22.76	N/A	
Overflow Grate Open Area w/o Debris =	80.44	N/A	ft^2
Overflow Grate Open Area w/ Debris =	40.22	N/A	ft^2

User Input: Outlet Pipe w/ Flow Restriction Plate (Circular Orifice, Restrictor Plate, or Rectangular Orifice)

	Zone 3 Restrictor	Not Selected	
Depth to Invert of Outlet Pipe =	0.50 ✓	N/A	ft (distance below
Outlet Pipe Diameter =	36.00 ✓	N/A	inches
Restrictor Plate Height Above Pipe Invert =	18.00 ✓		inches

Calculated Parameters for Outlet Pipe w/ Flow Restriction Plate

	Zone 3 Restrictor	Not Selected	
Outlet Pipe Area =	3.53	N/A	ft^2
Outlet Pipe Centroid =	0.86	N/A	feet
Half-Central Angle of Restrictor Plate on Pipe =	1.57	N/A	radians

User Input: Emergency Spillway (Rectangular or Trapezoidal)

Spillway Invert Stage=	5.80 ✓	ft (relative to basin bottom at Stage = 0 ft)
Spillway Crest Length =	30.00 ✓	feet
Spillway End Slopes =	4.00 ✓	H:V
Freeboard above Max Water Surface =	1.00 ✓	feet

Calculated Parameters for Spillway

Spillway Design Flow Depth=	0.78	feet
Stage at Top of Freeboard =	7.58	feet
Basin Area at Top of Freeboard =	1.09	acres
Basin Volume at Top of Freeboard =	4.28	acre-ft

Routed Hydrograph Results

The user can override the default CUHP hydrographs and runoff volumes by entering new values in the Inflow Hydrographs table (Columns W through AF).

Design Storm Return Period =	WQCV	EURV	2 Year	5 Year	10 Year	25 Year	50 Year	100 Year	500 Year
One-Hour Rainfall Depth (in) =	N/A	N/A	1.19	1.50	1.75	2.00	2.25	2.52	3.14
CUHP Runoff Volume (acre-ft) =	0.069	0.527	0.793	1.795	2.801	4.614	5.843	7.619	10.846
Inflow Hydrograph Volume (acre-ft) =	N/A	N/A	0.793	1.795	2.801	4.614	5.843	7.619	10.846
CUHP Predevelopment Peak Q (cfs) =	N/A	N/A	5.1	14.3	22.1	40.5	50.8	65.0	91.2
OPTIONAL Override Predevelopment Peak Q (cfs) =	N/A	N/A							
Predevelopment Unit Peak Flow, q (cfs/acre) =	N/A	N/A	0.08	0.23	0.35	0.64	0.81	1.04	1.45
Peak Inflow Q (cfs) =	N/A	N/A	7.8	17.5	25.2	43.6	54.1	68.5	94.8
Peak Outflow Q (cfs) =	0.0	0.3	1.8	10.4	18.6	33.3	35.6	39.40	77.6
Ratio Peak Outflow to Predevelopment Q =	N/A	N/A	N/A	0.7	0.8	0.8	0.7	0.6	0.9
Structure Controlling Flow =	Plate	Vertical Orifice 1	Overflow Weir 1	Overflow Weir 1	Overflow Weir 1	Outlet Plate 1	Outlet Plate 1	Outlet Plate 1	Spillway
Max Velocity through Grate 1 (fps) =	N/A	N/A	0.02	0.1	0.2	0.4	0.4	0.5	0.5
Max Velocity through Grate 2 (fps) =	N/A	N/A	N/A	N/A	N/A	N/A	N/A	N/A	N/A
Time to Drain 97% of Inflow Volume (hours) =	37	54	55	42	32	26	24	21	15
Time to Drain 99% of Inflow Volume (hours) =	40	62	65	58	53	46	41	34	29
Maximum Ponding Depth (ft) =	1.76	3.18	3.32	3.62	3.81	4.20	4.74	5.72	6.32
Area at Maximum Ponding Depth (acres) =	0.13	0.53	0.56	0.62	0.66	0.72	0.78	0.90	0.98
Maximum Volume Stored (acre-ft) =	0.069	0.531	0.608	0.784	0.905	1.174	1.579	2.404	2.966

DETENTION BASIN OUTLET STRUCTURE DESIGN

MHFD-Detention, Version 4.06 (July 2022)

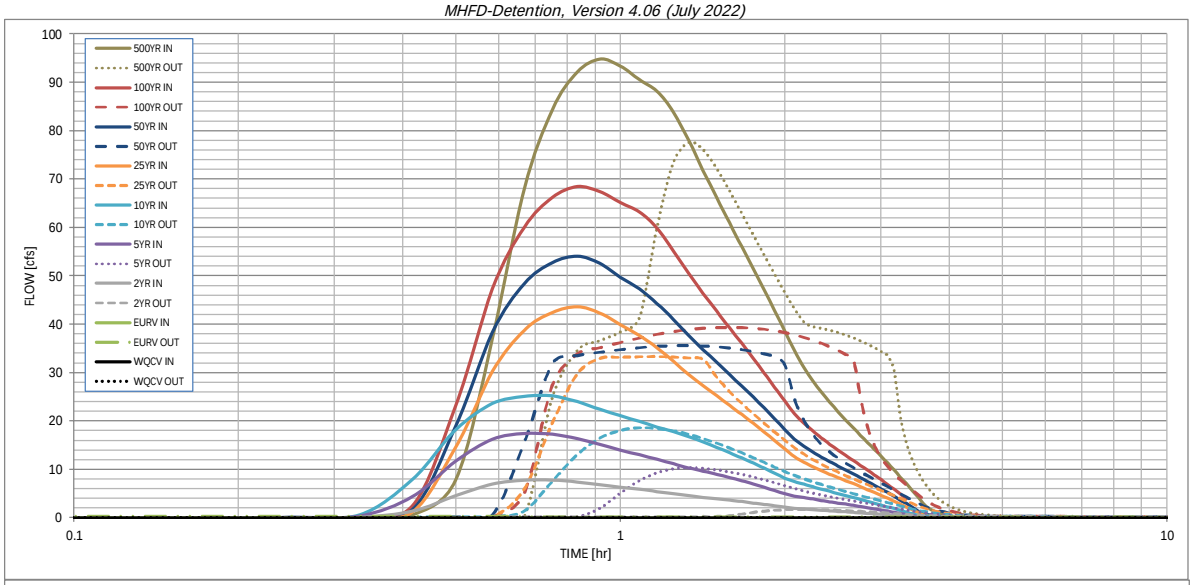

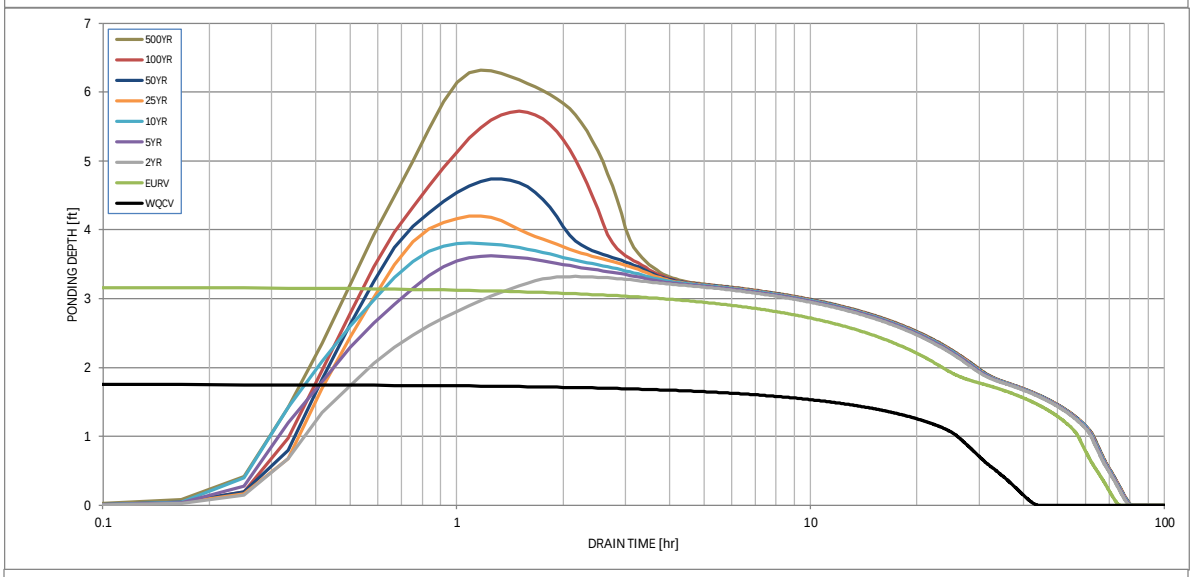

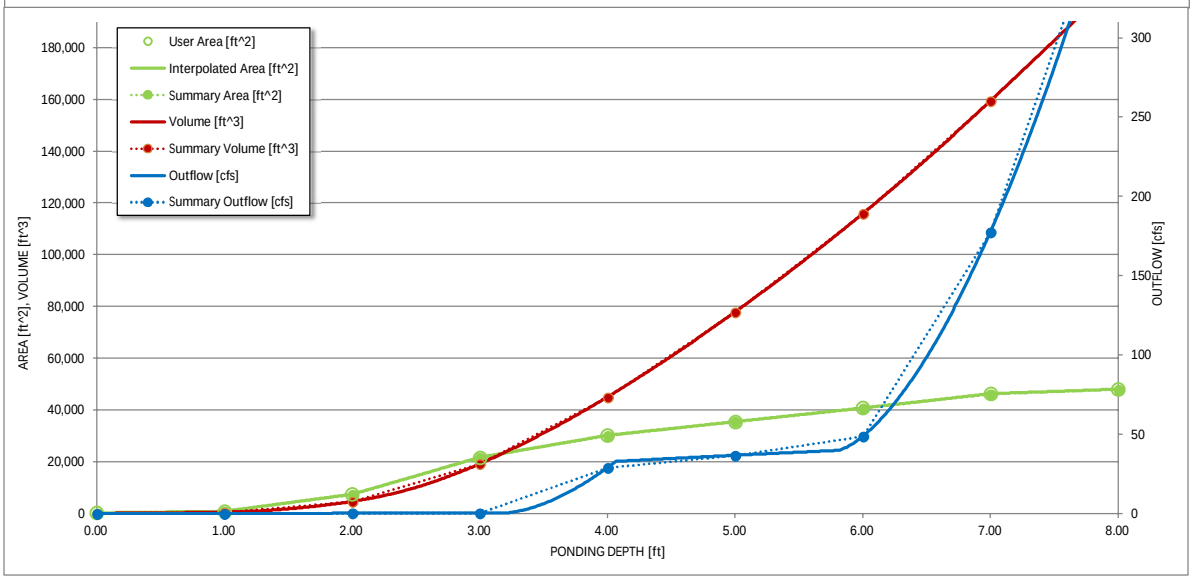

S-A-V-D Chart Axis Override	X-axis	Left Y-Axis	Right Y-Axis
minimum bound			
maximum bound			

DETENTION BASIN OUTLET STRUCTURE DESIGN

Outflow Hydrograph Workbook Filename:

Inflow Hydrographs

The user can override the calculated inflow hydrographs from this workbook with inflow hydrographs developed in a separate program.

	SOURCE	CUHP	CUHP	CUHP	CUHP	CUHP	CUHP	CUHP	CUHP	CUHP
Time Interval	TIME	WQCV [cfs]	EURV [cfs]	2 Year [cfs]	5 Year [cfs]	10 Year [cfs]	25 Year [cfs]	50 Year [cfs]	100 Year [cfs]	500 Year [cfs]
5.00 min	0:00:00	0.00	0.00	0.00	0.00	0.00	0.00	0.00	0.00	0.00
	0:05:00	0.00	0.00	0.00	0.00	0.00	0.00	0.00	0.00	0.00
	0:10:00	0.00	0.00	0.00	0.00	0.00	0.00	0.00	0.00	0.01
	0:15:00	0.00	0.00	0.04	0.06	0.07	0.05	0.06	0.06	0.10
	0:20:00	0.00	0.00	0.16	0.40	0.70	0.17	0.20	0.21	0.68
	0:25:00	0.00	0.00	1.43	4.45	8.08	1.37	1.80	2.69	7.93
	0:30:00	0.00	0.00	4.60	11.74	18.28	14.67	19.05	23.23	37.07
	0:35:00	0.00	0.00	7.05	16.27	23.62	30.26	38.40	47.29	67.96
	0:40:00	0.00	0.00	7.84	17.46	25.17	38.80	48.42	60.09	84.34
	0:45:00	0.00	0.00	7.84	17.28	25.20	42.49	52.77	66.23	92.14
	0:50:00	0.00	0.00	7.44	16.39	24.06	43.62	54.09	68.49	94.83
	0:55:00	0.00	0.00	6.87	15.17	22.44	42.38	52.61	67.42	93.38
	1:00:00	0.00	0.00	6.34	14.02	21.10	39.90	49.76	65.14	90.55
	1:05:00	0.00	0.00	5.92	13.05	19.95	37.71	47.28	63.28	88.21
	1:10:00	0.00	0.00	5.47	12.12	18.83	35.19	44.35	59.88	83.89
	1:15:00	0.00	0.00	5.01	11.19	17.78	32.38	41.03	55.20	78.00
	1:20:00	0.00	0.00	4.59	10.37	16.78	29.63	37.68	50.51	71.86
	1:25:00	0.00	0.00	4.26	9.68	15.70	27.34	34.82	46.41	66.18
	1:30:00	0.00	0.00	3.96	9.03	14.58	25.24	32.17	42.69	60.94
	1:35:00	0.00	0.00	3.67	8.39	13.48	23.26	29.67	39.26	56.07
	1:40:00	0.00	0.00	3.38	7.72	12.39	21.37	27.27	36.05	51.49
	1:45:00	0.00	0.00	3.09	7.03	11.32	19.55	24.96	32.96	47.07
	1:50:00	0.00	0.00	2.80	6.34	10.27	17.75	22.69	29.94	42.79
	1:55:00	0.00	0.00	2.51	5.65	9.23	15.98	20.47	27.00	38.62
	2:00:00	0.00	0.00	2.24	5.02	8.26	14.25	18.29	24.15	34.64
	2:05:00	0.00	0.00	2.01	4.54	7.53	12.68	16.31	21.57	31.10
	2:10:00	0.00	0.00	1.86	4.21	6.96	11.53	14.86	19.61	28.34
	2:15:00	0.00	0.00	1.72	3.91	6.44	10.59	13.66	18.00	26.01
	2:20:00	0.00	0.00	1.60	3.63	5.95	9.79	12.61	16.56	23.92
	2:25:00	0.00	0.00	1.49	3.36	5.49	9.05	11.64	15.26	22.01
	2:30:00	0.00	0.00	1.37	3.10	5.05	8.37	10.75	14.06	20.25
	2:35:00	0.00	0.00	1.26	2.84	4.62	7.71	9.90	12.93	18.60
	2:40:00	0.00	0.00	1.15	2.59	4.20	7.08	9.08	11.88	17.05
	2:45:00	0.00	0.00	1.05	2.34	3.80	6.47	8.30	10.88	15.59
	2:50:00	0.00	0.00	0.94	2.10	3.42	5.87	7.52	9.89	14.16
	2:55:00	0.00	0.00	0.84	1.86	3.04	5.27	6.76	8.90	12.74
	3:00:00	0.00	0.00	0.73	1.63	2.67	4.67	6.00	7.91	11.33
	3:05:00	0.00	0.00	0.63	1.39	2.30	4.08	5.24	6.93	9.92
	3:10:00	0.00	0.00	0.52	1.16	1.94	3.48	4.48	5.95	8.51
	3:15:00	0.00	0.00	0.42	0.93	1.57	2.89	3.73	4.97	7.11
	3:20:00	0.00	0.00	0.32	0.70	1.21	2.30	2.98	3.99	5.71
	3:25:00	0.00	0.00	0.22	0.47	0.86	1.71	2.23	3.01	4.32
	3:30:00	0.00	0.00	0.13	0.29	0.58	1.13	1.50	2.06	3.01
	3:35:00	0.00	0.00	0.07	0.18	0.42	0.69	0.95	1.33	2.03
	3:40:00	0.00	0.00	0.05	0.13	0.33	0.44	0.63	0.89	1.42
	3:45:00	0.00	0.00	0.04	0.10	0.26	0.28	0.43	0.60	0.99
	3:50:00	0.00	0.00	0.03	0.08	0.21	0.18	0.29	0.39	0.68
	3:55:00	0.00	0.00	0.03	0.07	0.16	0.12	0.20	0.24	0.45
	4:00:00	0.00	0.00	0.02	0.05	0.12	0.08	0.14	0.14	0.28
	4:05:00	0.00	0.00	0.02	0.04	0.09	0.05	0.09	0.07	0.17
	4:10:00	0.00	0.00	0.01	0.03	0.06	0.03	0.06	0.04	0.11
	4:15:00	0.00	0.00	0.01	0.02	0.04	0.02	0.05	0.03	0.08
	4:20:00	0.00	0.00	0.01	0.02	0.03	0.02	0.03	0.03	0.06
	4:25:00	0.00	0.00	0.01	0.01	0.02	0.01	0.03	0.02	0.05
	4:30:00	0.00	0.00	0.00	0.01	0.02	0.01	0.02	0.02	0.04
	4:35:00	0.00	0.00	0.00	0.00	0.01	0.01	0.01	0.01	0.03
	4:40:00	0.00	0.00	0.00	0.00	0.01	0.00	0.01	0.01	0.02
	4:45:00	0.00	0.00	0.00	0.00	0.00	0.00	0.01	0.01	0.01
	4:50:00	0.00	0.00	0.00	0.00	0.00	0.00	0.00	0.00	0.01
	4:55:00	0.00	0.00	0.00	0.00	0.00	0.00	0.00	0.00	0.00
	5:00:00	0.00	0.00	0.00	0.00	0.00	0.00	0.00	0.00	0.00
	5:05:00	0.00	0.00	0.00	0.00	0.00	0.00	0.00	0.00	0.00
	5:10:00	0.00	0.00	0.00	0.00	0.00	0.00	0.00	0.00	0.00
	5:15:00	0.00	0.00	0.00	0.00	0.00	0.00	0.00	0.00	0.00
	5:20:00	0.00	0.00	0.00	0.00	0.00	0.00	0.00	0.00	0.00
	5:25:00	0.00	0.00	0.00	0.00	0.00	0.00	0.00	0.00	0.00
	5:30:00	0.00	0.00	0.00	0.00	0.00	0.00	0.00	0.00	0.00
	5:35:00	0.00	0.00	0.00	0.00	0.00	0.00	0.00	0.00	0.00
	5:40:00	0.00	0.00	0.00	0.00	0.00	0.00	0.00	0.00	0.00
	5:45:00	0.00	0.00	0.00	0.00	0.00	0.00	0.00	0.00	0.00
	5:50:00	0.00	0.00	0.00	0.00	0.00	0.00	0.00	0.00	0.00
	5:55:00	0.00	0.00	0.00	0.00	0.00	0.00	0.00	0.00	0.00
	6:00:00	0.00	0.00	0.00	0.00	0.00	0.00	0.00	0.00	0.00

DETENTION BASIN OUTLET STRUCTURE DESIGN

MHFD-Detention, Version 4.06 (July 2022)

Summary Stage-Area-Volume-Discharge Relationships

The user can create a summary S-A-V-D by entering the desired stage increments and the remainder of the table will populate automatically.
The user should graphically compare the summary S-A-V-D table to the full S-A-V-D table in the chart to confirm it captures all key transition points.

Stage - Storage Description	Stage [ft]	Area [ft^2]	Area [acres]	Volume [ft^3]	Volume [ac-ft]	Total Outflow [cfs]
	0.00	180	0.004	0	0.000	0.00
	1.00	812	0.019	496	0.011	0.02
	2.00	7,385	0.170	4,594	0.105	0.12
	3.00	21,644	0.497	19,109	0.439	0.26
	4.00	30,169	0.693	45,015	1.033	28.81
	5.00	35,429	0.813	77,814	1.786	36.64
	6.00	40,734	0.935	115,896	2.661	48.62
	7.00	46,264	1.062	159,395	3.659	177.29
	8.00	48,000	1.102	206,526	4.741	409.63

For best results, include the stages of all grade slope changes (e.g. ISV and Floor) from the S-A-V table on Sheet 'Basin'.

Also include the inverts of all outlets (e.g. vertical orifice, overflow grate, and spillway, where applicable).

Existing Conditions Natural Channels Flow Summary							
Channel ID	Contributing Basins	Tributary Area (ac)	Basin Area (ac)	Basin 100-yr Flow (cfs)	Channel 100-yr Flow (cfs)	Velocity (ft/s)	Normal Depth (ft)
A1-1	A1	19.92	19.92	38.41	38.41	2.56	0.47
A2-3	A2, OS-A2	48.30 (A2) + 4.45 (OS-A2)	63.97 (A2) + 4.45 (OS-A2)	91.03(A2) + 11.46 (OS-A2)	79.02	4.88	0.89
A2-4	A2	2.73	63.97	91.03	2.71	1.49	0.23
A2-5	A2, B1	7.38 (A2) + 2.81 (B1)	63.97 (A2) + 43.28 (B1)	91.03(A2) + 72.48 (B1)	15.53	1.99	0.26
B1-2	B1	16.60	43.28	72.48	27.80	3.66	0.23
B1-3	B1	6.15	43.28	72.48	10.30	2.52	0.27
B1-6	B1	13.08	43.28	72.48	21.90	2.96	0.36
B2-1	B2	4.52	42.42	69.09	7.36	2.25	0.19
B2-2	B2	36.7	42.42	69.09	59.77	4.90	0.49
B7-1	B3	2.20	25.42	43.40	3.76	1.73	0.20
B8-1	B3	17.57	25.42	43.40	30.00	3.41	0.29

Worksheet for A1-1

Project Description

Friction Method	Manning Formula
Solve For	Normal Depth

Input Data

Channel Slope	0.015 ft/ft
Discharge	38.41 cfs

Section Definitions

Station (ft)	Elevation (ft)
0+00	41.00
0+35	36.00
0+64	36.00
1+00	41.00

Roughness Segment Definitions

Start Station	Ending Station	Roughness Coefficient
(0+00, 41.00)	(0+35, 36.00)	0.040
(0+35, 36.00)	(0+64, 36.00)	0.040
(0+64, 36.00)	(1+00, 41.00)	0.040

Options

Current Roughness Weighted Method	Pavlovskii's Method
Open Channel Weighting Method	Pavlovskii's Method
Closed Channel Weighting Method	Pavlovskii's Method

Results

Normal Depth	5.6 in
Roughness Coefficient	0.040
Elevation	36.47 ft
Elevation Range	36.0 to 41.0 ft
Flow Area	15.0 ft²
Wetted Perimeter	35.7 ft
Hydraulic Radius	5.1 in
Top Width	35.61 ft
Normal Depth	5.6 in
Critical Depth	4.4 in
Critical Slope	0.033 ft/ft
Velocity	2.56 ft/s
Velocity Head	0.10 ft
Specific Energy	0.57 ft
Froude Number	0.694

Worksheet for A1-1

Results	
Flow Type	Subcritical

GVF Input Data	
Downstream Depth	0.0 in
Length	0.0 ft
Number Of Steps	0

GVF Output Data	
Upstream Depth	0.0 in
Profile Description	N/A
Profile Headloss	0.00 ft
Downstream Velocity	0.00 ft/s
Upstream Velocity	0.00 ft/s
Normal Depth	5.6 in
Critical Depth	4.4 in
Channel Slope	0.015 ft/ft
Critical Slope	0.033 ft/ft

Worksheet for A2-3

Project Description

Friction Method	Manning Formula
Solve For	Normal Depth

Input Data

Channel Slope	0.030 ft/ft
Discharge	79.02 cfs

Section Definitions

Station (ft)	Elevation (ft)
0+00	11.00
0+51	4.00
0+63	4.00
0+98	9.00

Roughness Segment Definitions

Start Station	Ending Station	Roughness Coefficient
(0+00, 11.00)	(0+51, 4.00)	0.040
(0+51, 4.00)	(0+63, 4.00)	0.040
(0+63, 4.00)	(0+98, 9.00)	0.040

Options

Current Roughness Weighted Method	Pavlovskii's Method
Open Channel Weighting Method	Pavlovskii's Method
Closed Channel Weighting Method	Pavlovskii's Method

Results

Normal Depth	10.6 in
Roughness Coefficient	0.040
Elevation	4.89 ft
Elevation Range	4.0 to 11.0 ft
Flow Area	16.3 ft²
Wetted Perimeter	24.8 ft
Hydraulic Radius	7.9 in
Top Width	24.67 ft
Normal Depth	10.6 in
Critical Depth	11.0 in
Critical Slope	0.027 ft/ft
Velocity	4.86 ft/s
Velocity Head	0.37 ft
Specific Energy	1.25 ft
Froude Number	1.055
Flow Type	Supercritical

Worksheet for A2-3

GVF Input Data	
Downstream Depth	0.0 in
Length	0.0 ft
Number Of Steps	0

GVF Output Data	
Upstream Depth	0.0 in
Profile Description	N/A
Profile Headloss	0.00 ft
Downstream Velocity	Infinity ft/s
Upstream Velocity	Infinity ft/s
Normal Depth	10.6 in
Critical Depth	11.0 in
Channel Slope	0.030 ft/ft
Critical Slope	0.027 ft/ft

Worksheet for A2-4

Project Description

Friction Method	Manning Formula
Solve For	Normal Depth

Input Data

Channel Slope	0.029 ft/ft
Discharge	2.71 cfs

Section Definitions

Station (ft)	Elevation (ft)
0+15	14.00
0+32	12.75
0+47	12.50
0+98	18.00

Roughness Segment Definitions

Start Station	Ending Station	Roughness Coefficient
(0+15, 14.00)	(0+32, 12.75)	0.040
(0+32, 12.75)	(0+47, 12.50)	0.040
(0+47, 12.50)	(0+98, 18.00)	0.040

Options

Current Roughness Weighted Method	Pavlovskii's Method
Open Channel Weighting Method	Pavlovskii's Method
Closed Channel Weighting Method	Pavlovskii's Method

Results

Normal Depth	2.7 in
Roughness Coefficient	0.040
Elevation	12.73 ft
Elevation Range	12.5 to 18.0 ft
Flow Area	1.8 ft²
Wetted Perimeter	15.9 ft
Hydraulic Radius	1.4 in
Top Width	15.86 ft
Normal Depth	2.7 in
Critical Depth	2.5 in
Critical Slope	0.050 ft/ft
Velocity	1.49 ft/s
Velocity Head	0.03 ft
Specific Energy	0.26 ft
Froude Number	0.778

Worksheet for A2-4

Results	
Flow Type	Subcritical

GVF Input Data	
Downstream Depth	0.0 in
Length	0.0 ft
Number Of Steps	0

GVF Output Data	
Upstream Depth	0.0 in
Profile Description	N/A
Profile Headloss	0.00 ft
Downstream Velocity	0.00 ft/s
Upstream Velocity	0.00 ft/s
Normal Depth	2.7 in
Critical Depth	2.5 in
Channel Slope	0.029 ft/ft
Critical Slope	0.050 ft/ft

Worksheet for A2-5

Project Description

Friction Method	Manning Formula
Solve For	Normal Depth

Input Data

Channel Slope	0.020 ft/ft
Discharge	15.53 cfs

Section Definitions

Station (ft)	Elevation (ft)
0+00	15.00
0+43	12.00
0+68	12.00
1+25	16.75

Roughness Segment Definitions

Start Station	Ending Station	Roughness Coefficient
(0+00, 15.00)	(0+43, 12.00)	0.040
(0+43, 12.00)	(0+68, 12.00)	0.040
(0+68, 12.00)	(1+25, 16.75)	0.040

Options

Current Roughness Weighted Method	Pavlovskii's Method
Open Channel Weighting Method	Pavlovskii's Method
Closed Channel Weighting Method	Pavlovskii's Method

Results

Normal Depth	3.2 in
Roughness Coefficient	0.040
Elevation	12.27 ft
Elevation Range	12.0 to 16.8 ft
Flow Area	7.7 ft²
Wetted Perimeter	32.3 ft
Hydraulic Radius	2.9 in
Top Width	32.30 ft
Normal Depth	3.2 in
Critical Depth	2.6 in
Critical Slope	0.040 ft/ft
Velocity	2.02 ft/s
Velocity Head	0.06 ft
Specific Energy	0.33 ft
Froude Number	0.729

Worksheet for A2-5

Results	
Flow Type	Subcritical

GVF Input Data	
Downstream Depth	0.0 in
Length	0.0 ft
Number Of Steps	0

GVF Output Data	
Upstream Depth	0.0 in
Profile Description	N/A
Profile Headloss	0.00 ft
Downstream Velocity	0.00 ft/s
Upstream Velocity	0.00 ft/s
Normal Depth	3.2 in
Critical Depth	2.6 in
Channel Slope	0.020 ft/ft
Critical Slope	0.040 ft/ft

Worksheet for B1-2

Project Description

Friction Method	Manning Formula
Solve For	Normal Depth

Input Data

Channel Slope	0.075 ft/ft
Discharge	27.80 cfs

Section Definitions

Station (ft)	Elevation (ft)
0+00	3.00
0+31	0.00
0+60	0.00
1+00	4.84

Roughness Segment Definitions

Start Station	Ending Station	Roughness Coefficient
(0+00, 3.00)	(0+31, 0.00)	0.040
(0+31, 0.00)	(0+60, 0.00)	0.040
(0+60, 0.00)	(1+00, 4.84)	0.040

Options

Current Roughness Weighted Method	Pavlovskii's Method
Open Channel Weighting Method	Pavlovskii's Method
Closed Channel Weighting Method	Pavlovskii's Method

Results

Normal Depth	2.9 in
Roughness Coefficient	0.040
Elevation	0.24 ft
Elevation Range	0.0 to 4.8 ft
Flow Area	7.4 ft²
Wetted Perimeter	33.3 ft
Hydraulic Radius	2.7 in
Top Width	33.30 ft
Normal Depth	2.9 in
Critical Depth	3.6 in
Critical Slope	0.036 ft/ft
Velocity	3.73 ft/s
Velocity Head	0.22 ft
Specific Energy	0.46 ft
Froude Number	1.393
Flow Type	Supercritical

Worksheet for B1-2

GVF Input Data	
Downstream Depth	0.0 in
Length	0.0 ft
Number Of Steps	0

GVF Output Data	
Upstream Depth	0.0 in
Profile Description	N/A
Profile Headloss	0.00 ft
Downstream Velocity	Infinity ft/s
Upstream Velocity	Infinity ft/s
Normal Depth	2.9 in
Critical Depth	3.6 in
Channel Slope	0.075 ft/ft
Critical Slope	0.036 ft/ft

Worksheet for B1-3

Project Description

Friction Method	Manning Formula
Solve For	Normal Depth

Input Data

Channel Slope	0.033 ft/ft
Discharge	10.30 cfs

Section Definitions

Station (ft)	Elevation (ft)
0+00	19.00
0+45	14.00
0+56	14.00
0+98	18.00

Roughness Segment Definitions

Start Station	Ending Station	Roughness Coefficient
(0+00, 19.00)	(0+45, 14.00)	0.040
(0+45, 14.00)	(0+56, 14.00)	0.040
(0+56, 14.00)	(0+98, 18.00)	0.040

Options

Current Roughness Weighted Method	Pavlovskii's Method
Open Channel Weighting Method	Pavlovskii's Method
Closed Channel Weighting Method	Pavlovskii's Method

Results

Normal Depth	3.3 in
Roughness Coefficient	0.040
Elevation	14.28 ft
Elevation Range	14.0 to 19.0 ft
Flow Area	4.0 ft²
Wetted Perimeter	17.2 ft
Hydraulic Radius	2.8 in
Top Width	17.13 ft
Normal Depth	3.3 in
Critical Depth	3.2 in
Critical Slope	0.038 ft/ft
Velocity	2.56 ft/s
Velocity Head	0.10 ft
Specific Energy	0.38 ft
Froude Number	0.933

Worksheet for B1-3

Results	
Flow Type	Subcritical

GVF Input Data	
Downstream Depth	0.0 in
Length	0.0 ft
Number Of Steps	0

GVF Output Data	
Upstream Depth	0.0 in
Profile Description	N/A
Profile Headloss	0.00 ft
Downstream Velocity	Infinity ft/s
Upstream Velocity	Infinity ft/s
Normal Depth	3.3 in
Critical Depth	3.2 in
Channel Slope	0.033 ft/ft
Critical Slope	0.038 ft/ft

Worksheet for B1-6

Project Description

Friction Method	Manning Formula
Solve For	Normal Depth

Input Data

Channel Slope	0.030 ft/ft
Discharge	21.90 cfs

Section Definitions

Station (ft)	Elevation (ft)
0+00	22.00
0+35	18.00
0+51	18.00
0+92	23.00

Roughness Segment Definitions

Start Station	Ending Station	Roughness Coefficient
(0+00, 22.00)	(0+35, 18.00)	0.040
(0+35, 18.00)	(0+51, 18.00)	0.040
(0+51, 18.00)	(0+92, 23.00)	0.040

Options

Current Roughness Weighted Method	Pavlovskii's Method
Open Channel Weighting Method	Pavlovskii's Method
Closed Channel Weighting Method	Pavlovskii's Method

Results

Normal Depth	4.5 in
Roughness Coefficient	0.040
Elevation	18.37 ft
Elevation Range	18.0 to 23.0 ft
Flow Area	7.3 ft²
Wetted Perimeter	22.6 ft
Hydraulic Radius	3.9 in
Top Width	22.57 ft
Normal Depth	4.5 in
Critical Depth	4.3 in
Critical Slope	0.035 ft/ft
Velocity	3.01 ft/s
Velocity Head	0.14 ft
Specific Energy	0.52 ft
Froude Number	0.937

Worksheet for B1-6

Results	
Flow Type	Subcritical

GVF Input Data	
Downstream Depth	0.0 in
Length	0.0 ft
Number Of Steps	0

GVF Output Data	
Upstream Depth	0.0 in
Profile Description	N/A
Profile Headloss	0.00 ft
Downstream Velocity	0.00 ft/s
Upstream Velocity	0.00 ft/s
Normal Depth	4.5 in
Critical Depth	4.3 in
Channel Slope	0.030 ft/ft
Critical Slope	0.035 ft/ft

Worksheet for B2-1

Project Description

Friction Method	Manning Formula
Solve For	Normal Depth

Input Data

Channel Slope	0.037 ft/ft
Discharge	7.36 cfs

Section Definitions

Station (ft)	Elevation (ft)
0+00	5.00
0+42	0.00
0+58	0.00
0+75	4.50

Roughness Segment Definitions

Start Station	Ending Station	Roughness Coefficient
(0+00, 5.00)	(0+42, 0.00)	0.040
(0+42, 0.00)	(0+58, 0.00)	0.040
(0+58, 0.00)	(0+75, 4.50)	0.040

Options

Current Roughness Weighted Method	Pavlovskii's Method
Open Channel Weighting Method	Pavlovskii's Method
Closed Channel Weighting Method	Pavlovskii's Method

Results

Normal Depth	2.3 in
Roughness Coefficient	0.040
Elevation	0.19 ft
Elevation Range	0.0 to 5.0 ft
Flow Area	3.3 ft²
Wetted Perimeter	18.4 ft
Hydraulic Radius	2.1 in
Top Width	18.32 ft
Normal Depth	2.3 in
Critical Depth	2.2 in
Critical Slope	0.042 ft/ft
Velocity	2.25 ft/s
Velocity Head	0.08 ft
Specific Energy	0.27 ft
Froude Number	0.942
Flow Type	Subcritical

Worksheet for B2-1

GVF Input Data	
Downstream Depth	0.0 in
Length	0.0 ft
Number Of Steps	0

GVF Output Data	
Upstream Depth	0.0 in
Profile Description	N/A
Profile Headloss	0.00 ft
Downstream Velocity	0.00 ft/s
Upstream Velocity	0.00 ft/s
Normal Depth	2.3 in
Critical Depth	2.2 in
Channel Slope	0.037 ft/ft
Critical Slope	0.042 ft/ft

Worksheet for B2-2

Project Description

Friction Method	Manning Formula
Solve For	Normal Depth

Input Data

Channel Slope	0.054 ft/ft
Discharge	59.77 cfs

Section Definitions

Station (ft)	Elevation (ft)
0+00	13.00
0+38	8.00
0+59	8.00
0+96	13.00

Roughness Segment Definitions

Start Station	Ending Station	Roughness Coefficient
(0+00, 13.00)	(0+38, 8.00)	0.040
(0+38, 8.00)	(0+59, 8.00)	0.040
(0+59, 8.00)	(0+96, 13.00)	0.040

Options

Current Roughness Weighted Method	Pavlovskii's Method
Open Channel Weighting Method	Pavlovskii's Method
Closed Channel Weighting Method	Pavlovskii's Method

Results

Normal Depth	5.9 in
Roughness Coefficient	0.040
Elevation	8.49 ft
Elevation Range	8.0 to 13.0 ft
Flow Area	12.2 ft²
Wetted Perimeter	28.5 ft
Hydraulic Radius	5.1 in
Top Width	28.40 ft
Normal Depth	5.9 in
Critical Depth	7.0 in
Critical Slope	0.029 ft/ft
Velocity	4.90 ft/s
Velocity Head	0.37 ft
Specific Energy	0.87 ft
Froude Number	1.320
Flow Type	Supercritical

Worksheet for B2-2

GVF Input Data	
Downstream Depth	0.0 in
Length	0.0 ft
Number Of Steps	0

GVF Output Data	
Upstream Depth	0.0 in
Profile Description	N/A
Profile Headloss	0.00 ft
Downstream Velocity	Infinity ft/s
Upstream Velocity	Infinity ft/s
Normal Depth	5.9 in
Critical Depth	7.0 in
Channel Slope	0.054 ft/ft
Critical Slope	0.029 ft/ft

Worksheet for B7-1

Project Description

Friction Method	Manning Formula
Solve For	Normal Depth

Input Data

Channel Slope	0.046 ft/ft
Discharge	3.76 cfs

Section Definitions

Station (ft)	Elevation (ft)
0+00	95.00
0+25	92.00
0+50	91.75
0+90	98.00

Roughness Segment Definitions

Start Station	Ending Station	Roughness Coefficient
(0+00, 95.00)	(0+25, 92.00)	0.040
(0+25, 92.00)	(0+50, 91.75)	0.040
(0+50, 91.75)	(0+90, 98.00)	0.040

Options

Current Roughness Weighted Method	Pavlovskii's Method
Open Channel Weighting Method	Pavlovskii's Method
Closed Channel Weighting Method	Pavlovskii's Method

Results

Normal Depth	2.4 in
Roughness Coefficient	0.040
Elevation	91.95 ft
Elevation Range	91.8 to 98.0 ft
Flow Area	2.2 ft²
Wetted Perimeter	21.5 ft
Hydraulic Radius	1.2 in
Top Width	21.51 ft
Normal Depth	2.4 in
Critical Depth	2.4 in
Critical Slope	0.050 ft/ft
Velocity	1.73 ft/s
Velocity Head	0.05 ft
Specific Energy	0.25 ft
Froude Number	0.959

Worksheet for B7-1

Results	
Flow Type	Subcritical

GVF Input Data	
Downstream Depth	0.0 in
Length	0.0 ft
Number Of Steps	0

GVF Output Data	
Upstream Depth	0.0 in
Profile Description	N/A
Profile Headloss	0.00 ft
Downstream Velocity	0.00 ft/s
Upstream Velocity	0.00 ft/s
Normal Depth	2.4 in
Critical Depth	2.4 in
Channel Slope	0.046 ft/ft
Critical Slope	0.050 ft/ft

Worksheet for B8-1

Project Description

Friction Method	Manning Formula
Solve For	Normal Depth

Input Data

Channel Slope	0.050 ft/ft
Discharge	30.00 cfs

Section Definitions

Station (ft)	Elevation (ft)
0+00	202.00
0+52	198.00
0+79	198.00
1+06	201.00

Roughness Segment Definitions

Start Station	Ending Station	Roughness Coefficient
(0+00, 202.00)	(0+52, 198.00)	0.040
(0+52, 198.00)	(0+79, 198.00)	0.040
(0+79, 198.00)	(1+06, 201.00)	0.040

Options

Current Roughness Weighted Method	Pavlovskii's Method
Open Channel Weighting Method	Pavlovskii's Method
Closed Channel Weighting Method	Pavlovskii's Method

Results

Normal Depth	3.5 in
Roughness Coefficient	0.040
Elevation	198.29 ft
Elevation Range	198.0 to 202.0 ft
Flow Area	8.8 ft²
Wetted Perimeter	33.4 ft
Hydraulic Radius	3.2 in
Top Width	33.41 ft
Normal Depth	3.5 in
Critical Depth	3.9 in
Critical Slope	0.035 ft/ft
Velocity	3.41 ft/s
Velocity Head	0.18 ft
Specific Energy	0.47 ft
Froude Number	1.172

Worksheet for B8-1

Results	
Flow Type	Supercritical

GVF Input Data	
Downstream Depth	0.0 in
Length	0.0 ft
Number Of Steps	0

GVF Output Data	
Upstream Depth	0.0 in
Profile Description	N/A
Profile Headloss	0.00 ft
Downstream Velocity	Infinity ft/s
Upstream Velocity	Infinity ft/s
Normal Depth	3.5 in
Critical Depth	3.9 in
Channel Slope	0.050 ft/ft
Critical Slope	0.035 ft/ft

Proposed Conditions Natural Channels Flow Summary								
Channel ID	Contributing Basins	Tributary Area (ac)	Basin Area (ac)	Basin 100-yr Flow (cfs)	Channel 100-yr Flow (cfs)	Velocity (ft/s)	Normal Depth (ft)	Lining
A1-1	A1	19.55	19.55	41.24	41.24	2.62	0.48	
A2-1	A2, OS-A2	32.76 (A2) + 3.25 (OS-A2)	61.98 (A2) +3.14 (OS-A2)	97.07 (A2) + 8.09(OS-A2)	58.15	3.78	0.58	
A2-2	A2	9.06	61.98	97.07	14.19	2.47	0.18	
A2-3	A2	11.45	61.98	97.07	17.93	3.07	0.39	
A2-4	A2	1.70	61.98	97.07	2.66	1.49	0.23	
A2-5	A2	11.27	61.98	97.07	17.65	2.18	0.30	
A2-6	A2	5.9	61.98	97.07	9.24	1.83	0.18	
A2-7	A2	1.74	58.27	97.07	2.90	0.97	0.10	
B1-1	B1	10.19	40.74	76.45	19.12	2.67	0.28	
B1-2	B1	14.29	40.74	76.45	26.82	3.69	0.23	
B1-3	B1	13.43	40.74	76.45	25.20	3.41	0.46	
B1-4	B1	4.03	40.74	76.45	7.56	2.47	0.14	
B1-5	B1	2.54	40.74	76.45	4.77	1.65	0.11	
B1-6	B1	2.72	40.74	76.45	5.10	1.81	0.16	
B2-1	B2	4.92	16.00	37.85	11.64	2.67	0.25	
B2-2	B2	9.77	16.00	37.85	23.11	3.52	0.28	
B6-1	B6	11.58	53.31	106.32	23.09	6.66	0.29	TRM
B7-1	B7	2.25	2.46	6.17	5.64	1.91	0.23	
B8-1	B8, B6	3.32 (B8) + 53.31 (B6)	9.52 (B8) + 52.15 (B6)	23.05 (B8) + 106.32 (B6)	118.80	5.44	0.64	TRM

Please provide cross-sectional views of all channels with a minimum 1-foot freeboard.

CROSS SECTIONS FOR CHANNELS HAVE BEEN ADDED TO APPENDIX

Worksheet for A1-1

Project Description

Friction Method	Manning Formula
Solve For	Normal Depth

Input Data

Channel Slope	0.015 ft/ft
Discharge	41.24 cfs

Section Definitions

Station (ft)	Elevation (ft)
0+00	41.00
0+35	36.00
0+64	36.00
1+00	41.00

Roughness Segment Definitions

Start Station	Ending Station	Roughness Coefficient
(0+00, 41.00)	(0+35, 36.00)	0.040
(0+35, 36.00)	(0+64, 36.00)	0.040
(0+64, 36.00)	(1+00, 41.00)	0.040

Options

Current Roughness Weighted Method	Pavlovskii's Method
Open Channel Weighting Method	Pavlovskii's Method
Closed Channel Weighting Method	Pavlovskii's Method

Results

Normal Depth	5.8 in
Roughness Coefficient	0.040
Elevation	36.48 ft
Elevation Range	36.0 to 41.0 ft
Flow Area	15.7 ft²
Wetted Perimeter	36.0 ft
Hydraulic Radius	5.3 in
Top Width	35.89 ft
Normal Depth	5.8 in
Critical Depth	4.6 in
Critical Slope	0.033 ft/ft
Velocity	2.62 ft/s
Velocity Head	0.11 ft
Specific Energy	0.59 ft
Froude Number	0.698

Worksheet for A1-1

Results	
Flow Type	Subcritical

GVF Input Data	
Downstream Depth	0.0 in
Length	0.0 ft
Number Of Steps	0

GVF Output Data	
Upstream Depth	0.0 in
Profile Description	N/A
Profile Headloss	0.00 ft
Downstream Velocity	0.00 ft/s
Upstream Velocity	0.00 ft/s
Normal Depth	5.8 in
Critical Depth	4.6 in
Channel Slope	0.015 ft/ft
Critical Slope	0.033 ft/ft

Worksheet for A2-1

Project Description

Friction Method	Manning Formula
Solve For	Normal Depth

Input Data

Channel Slope	0.028 ft/ft
Discharge	58.15 cfs

Section Definitions

Station (ft)	Elevation (ft)
0+00	47.00
0+66	42.00
0+87	42.00
1+25	47.75

Roughness Segment Definitions

Start Station	Ending Station	Roughness Coefficient
(0+00, 47.00)	(0+66, 42.00)	0.040
(0+66, 42.00)	(0+87, 42.00)	0.040
(0+87, 42.00)	(1+25, 47.75)	0.040

Options

Current Roughness Weighted Method	Pavlovskii's Method
Open Channel Weighting Method	Pavlovskii's Method
Closed Channel Weighting Method	Pavlovskii's Method

Results

Normal Depth	6.9 in
Roughness Coefficient	0.040
Elevation	42.58 ft
Elevation Range	42.0 to 47.8 ft
Flow Area	15.4 ft²
Wetted Perimeter	32.5 ft
Hydraulic Radius	5.7 in
Top Width	32.42 ft
Normal Depth	6.9 in
Critical Depth	6.8 in
Critical Slope	0.030 ft/ft
Velocity	3.78 ft/s
Velocity Head	0.22 ft
Specific Energy	0.80 ft
Froude Number	0.966

Worksheet for A2-1

Results	
Flow Type	Subcritical

GVF Input Data	
Downstream Depth	0.0 in
Length	0.0 ft
Number Of Steps	0

GVF Output Data	
Upstream Depth	0.0 in
Profile Description	N/A
Profile Headloss	0.00 ft
Downstream Velocity	Infinity ft/s
Upstream Velocity	Infinity ft/s
Normal Depth	6.9 in
Critical Depth	6.8 in
Channel Slope	0.028 ft/ft
Critical Slope	0.030 ft/ft

Worksheet for A2-2

Project Description

Friction Method	Manning Formula
Solve For	Normal Depth

Input Data

Channel Slope	0.046 ft/ft
Discharge	14.19 cfs

Section Definitions

Station (ft)	Elevation (ft)
0+00	23.00
0+43	16.00
0+72	16.00
1+25	20.00

Roughness Segment Definitions

Start Station	Ending Station	Roughness Coefficient
(0+00, 23.00)	(0+43, 16.00)	0.040
(0+43, 16.00)	(0+72, 16.00)	0.040
(0+72, 16.00)	(1+25, 20.00)	0.040

Options

Current Roughness Weighted Method	Pavlovskii's Method
Open Channel Weighting Method	Pavlovskii's Method
Closed Channel Weighting Method	Pavlovskii's Method

Results

Normal Depth	2.2 in
Roughness Coefficient	0.040
Elevation	16.18 ft
Elevation Range	16.0 to 23.0 ft
Flow Area	5.7 ft²
Wetted Perimeter	33.3 ft
Hydraulic Radius	2.1 in
Top Width	33.26 ft
Normal Depth	2.2 in
Critical Depth	2.3 in
Critical Slope	0.042 ft/ft
Velocity	2.47 ft/s
Velocity Head	0.09 ft
Specific Energy	0.28 ft
Froude Number	1.047

Worksheet for A2-2

Results	
Flow Type	Supercritical

GVF Input Data	
Downstream Depth	0.0 in
Length	0.0 ft
Number Of Steps	0

GVF Output Data	
Upstream Depth	0.0 in
Profile Description	N/A
Profile Headloss	0.00 ft
Downstream Velocity	Infinity ft/s
Upstream Velocity	Infinity ft/s
Normal Depth	2.2 in
Critical Depth	2.3 in
Channel Slope	0.046 ft/ft
Critical Slope	0.042 ft/ft

Worksheet for A2-3

Project Description

Friction Method	Manning Formula
Solve For	Normal Depth

Input Data

Channel Slope	0.030 ft/ft
Discharge	17.93 cfs

Section Definitions

Station (ft)	Elevation (ft)
0+00	11.00
0+51	4.00
0+63	4.00
0+98	9.00

Roughness Segment Definitions

Start Station	Ending Station	Roughness Coefficient
(0+00, 11.00)	(0+51, 4.00)	0.040
(0+51, 4.00)	(0+63, 4.00)	0.040
(0+63, 4.00)	(0+98, 9.00)	0.040

Options

Current Roughness Weighted Method	Pavlovskii's Method
Open Channel Weighting Method	Pavlovskii's Method
Closed Channel Weighting Method	Pavlovskii's Method

Results

Normal Depth	4.7 in
Roughness Coefficient	0.040
Elevation	4.39 ft
Elevation Range	4.0 to 11.0 ft
Flow Area	5.8 ft²
Wetted Perimeter	17.7 ft
Hydraulic Radius	4.0 in
Top Width	17.63 ft
Normal Depth	4.7 in
Critical Depth	4.6 in
Critical Slope	0.034 ft/ft
Velocity	3.07 ft/s
Velocity Head	0.15 ft
Specific Energy	0.54 ft
Froude Number	0.941
Flow Type	Subcritical

Worksheet for A2-3

GVF Input Data	
Downstream Depth	0.0 in
Length	0.0 ft
Number Of Steps	0

GVF Output Data	
Upstream Depth	0.0 in
Profile Description	N/A
Profile Headloss	0.00 ft
Downstream Velocity	0.00 ft/s
Upstream Velocity	0.00 ft/s
Normal Depth	4.7 in
Critical Depth	4.6 in
Channel Slope	0.030 ft/ft
Critical Slope	0.034 ft/ft

Worksheet for A2-4

Project Description

Friction Method	Manning Formula
Solve For	Normal Depth

Input Data

Channel Slope	0.029 ft/ft
Discharge	2.66 cfs

Section Definitions

Station (ft)	Elevation (ft)
0+15	14.00
0+32	12.75
0+47	12.50
0+98	18.00

Roughness Segment Definitions

Start Station	Ending Station	Roughness Coefficient
(0+15, 14.00)	(0+32, 12.75)	0.040
(0+32, 12.75)	(0+47, 12.50)	0.040
(0+47, 12.50)	(0+98, 18.00)	0.040

Options

Current Roughness Weighted Method	Pavlovskii's Method
Open Channel Weighting Method	Pavlovskii's Method
Closed Channel Weighting Method	Pavlovskii's Method

Results

Normal Depth	2.7 in
Roughness Coefficient	0.040
Elevation	12.73 ft
Elevation Range	12.5 to 18.0 ft
Flow Area	1.8 ft²
Wetted Perimeter	15.8 ft
Hydraulic Radius	1.4 in
Top Width	15.75 ft
Normal Depth	2.7 in
Critical Depth	2.5 in
Critical Slope	0.050 ft/ft
Velocity	1.49 ft/s
Velocity Head	0.03 ft
Specific Energy	0.26 ft
Froude Number	0.777

Worksheet for A2-4

Results	
Flow Type	Subcritical

GVF Input Data	
Downstream Depth	0.0 in
Length	0.0 ft
Number Of Steps	0

GVF Output Data	
Upstream Depth	0.0 in
Profile Description	N/A
Profile Headloss	0.00 ft
Downstream Velocity	0.00 ft/s
Upstream Velocity	0.00 ft/s
Normal Depth	2.7 in
Critical Depth	2.5 in
Channel Slope	0.029 ft/ft
Critical Slope	0.050 ft/ft

Worksheet for A2-5

Project Description

Friction Method	Manning Formula
Solve For	Normal Depth

Input Data

Channel Slope	0.020 ft/ft
Discharge	19.34 cfs

Section Definitions

Station (ft)	Elevation (ft)
0+00	15.00
0+43	12.00
0+68	12.00
1+25	16.75

Roughness Segment Definitions

Start Station	Ending Station	Roughness Coefficient
(0+00, 15.00)	(0+43, 12.00)	0.040
(0+43, 12.00)	(0+68, 12.00)	0.040
(0+68, 12.00)	(1+25, 16.75)	0.040

Options

Current Roughness Weighted Method	Pavlovskii's Method
Open Channel Weighting Method	Pavlovskii's Method
Closed Channel Weighting Method	Pavlovskii's Method

Results

Normal Depth	3.6 in
Roughness Coefficient	0.040
Elevation	12.30 ft
Elevation Range	12.0 to 16.8 ft
Flow Area	8.9 ft²
Wetted Perimeter	33.3 ft
Hydraulic Radius	3.2 in
Top Width	33.25 ft
Normal Depth	3.6 in
Critical Depth	3.0 in
Critical Slope	0.038 ft/ft
Velocity	2.18 ft/s
Velocity Head	0.07 ft
Specific Energy	0.38 ft
Froude Number	0.743

Worksheet for A2-5

Results	
Flow Type	Subcritical

GVF Input Data	
Downstream Depth	0.0 in
Length	0.0 ft
Number Of Steps	0

GVF Output Data	
Upstream Depth	0.0 in
Profile Description	N/A
Profile Headloss	0.00 ft
Downstream Velocity	0.00 ft/s
Upstream Velocity	0.00 ft/s
Normal Depth	3.6 in
Critical Depth	3.0 in
Channel Slope	0.020 ft/ft
Critical Slope	0.038 ft/ft

Worksheet for A2-6

Project Description

Friction Method	Manning Formula
Solve For	Normal Depth

Input Data

Channel Slope	0.027 ft/ft
Discharge	10.20 cfs

Section Definitions

Station (ft)	Elevation (ft)
0+00	30.00
0+31	28.00
0+59	28.00
0+94	30.25

Roughness Segment Definitions

Start Station	Ending Station	Roughness Coefficient
(0+00, 30.00)	(0+31, 28.00)	0.040
(0+31, 28.00)	(0+59, 28.00)	0.040
(0+59, 28.00)	(0+94, 30.25)	0.040

Options

Current Roughness Weighted Method	Pavlovskii's Method
Open Channel Weighting Method	Pavlovskii's Method
Closed Channel Weighting Method	Pavlovskii's Method

Results

Normal Depth	2.1 in
Roughness Coefficient	0.040
Elevation	28.18 ft
Elevation Range	28.0 to 30.3 ft
Flow Area	5.6 ft²
Wetted Perimeter	34.0 ft
Hydraulic Radius	2.0 in
Top Width	34.00 ft
Normal Depth	2.1 in
Critical Depth	1.8 in
Critical Slope	0.045 ft/ft
Velocity	1.83 ft/s
Velocity Head	0.05 ft
Specific Energy	0.23 ft
Froude Number	0.796

Worksheet for A2-6

Results	
Flow Type	Subcritical

GVF Input Data	
Downstream Depth	0.0 in
Length	0.0 ft
Number Of Steps	0

GVF Output Data	
Upstream Depth	0.0 in
Profile Description	N/A
Profile Headloss	0.00 ft
Downstream Velocity	0.00 ft/s
Upstream Velocity	0.00 ft/s
Normal Depth	2.1 in
Critical Depth	1.8 in
Channel Slope	0.027 ft/ft
Critical Slope	0.045 ft/ft

Worksheet for A2-7

Project Description

Friction Method	Manning Formula
Solve For	Normal Depth

Input Data

Channel Slope	0.015 ft/ft
Discharge	2.90 cfs

Section Definitions

Station (ft)	Elevation (ft)
0+00	41.00
0+35	36.00
0+64	36.00
1+00	41.00

Roughness Segment Definitions

Start Station	Ending Station	Roughness Coefficient
(0+00, 41.00)	(0+35, 36.00)	0.040
(0+35, 36.00)	(0+64, 36.00)	0.040
(0+64, 36.00)	(1+00, 41.00)	0.040

Options

Current Roughness Weighted Method	Pavlovskii's Method
Open Channel Weighting Method	Pavlovskii's Method
Closed Channel Weighting Method	Pavlovskii's Method

Results

Normal Depth	1.2 in
Roughness Coefficient	0.040
Elevation	36.10 ft
Elevation Range	36.0 to 41.0 ft
Flow Area	3.0 ft²
Wetted Perimeter	30.4 ft
Hydraulic Radius	1.2 in
Top Width	30.43 ft
Normal Depth	1.2 in
Critical Depth	0.8 in
Critical Slope	0.058 ft/ft
Velocity	0.97 ft/s
Velocity Head	0.01 ft
Specific Energy	0.12 ft
Froude Number	0.544

Worksheet for A2-7

Results	
Flow Type	Subcritical

GVF Input Data	
Downstream Depth	0.0 in
Length	0.0 ft
Number Of Steps	0

GVF Output Data	
Upstream Depth	0.0 in
Profile Description	N/A
Profile Headloss	0.00 ft
Downstream Velocity	0.00 ft/s
Upstream Velocity	0.00 ft/s
Normal Depth	1.2 in
Critical Depth	0.8 in
Channel Slope	0.015 ft/ft
Critical Slope	0.058 ft/ft

Worksheet for B1-1

Project Description

Friction Method	Manning Formula
Solve For	Normal Depth

Input Data

Channel Slope	0.034 ft/ft
Discharge	19.12 cfs

Section Definitions

Station (ft)	Elevation (ft)
0+00	26.00
0+54	20.00
0+76	20.00
1+25	22.75

Roughness Segment Definitions

Start Station	Ending Station	Roughness Coefficient
(0+00, 26.00)	(0+54, 20.00)	0.040
(0+54, 20.00)	(0+76, 20.00)	0.040
(0+76, 20.00)	(1+25, 22.75)	0.040

Options

Current Roughness Weighted Method	Pavlovskii's Method
Open Channel Weighting Method	Pavlovskii's Method
Closed Channel Weighting Method	Pavlovskii's Method

Results

Normal Depth	3.3 in
Roughness Coefficient	0.040
Elevation	20.28 ft
Elevation Range	20.0 to 26.0 ft
Flow Area	7.2 ft²
Wetted Perimeter	29.5 ft
Hydraulic Radius	2.9 in
Top Width	29.47 ft
Normal Depth	3.3 in
Critical Depth	3.2 in
Critical Slope	0.038 ft/ft
Velocity	2.67 ft/s
Velocity Head	0.11 ft
Specific Energy	0.39 ft
Froude Number	0.954

Worksheet for B1-1

Results	
Flow Type	Subcritical

GVF Input Data	
Downstream Depth	0.0 in
Length	0.0 ft
Number Of Steps	0

GVF Output Data	
Upstream Depth	0.0 in
Profile Description	N/A
Profile Headloss	0.00 ft
Downstream Velocity	0.00 ft/s
Upstream Velocity	0.00 ft/s
Normal Depth	3.3 in
Critical Depth	3.2 in
Channel Slope	0.034 ft/ft
Critical Slope	0.038 ft/ft

Worksheet for B1-2

Project Description

Friction Method	Manning Formula
Solve For	Normal Depth

Input Data

Channel Slope	0.075 ft/ft
Discharge	26.82 cfs

Section Definitions

Station (ft)	Elevation (ft)
0+00	3.00
0+31	0.00
0+60	0.00
1+00	4.84

Roughness Segment Definitions

Start Station	Ending Station	Roughness Coefficient
(0+00, 3.00)	(0+31, 0.00)	0.040
(0+31, 0.00)	(0+60, 0.00)	0.040
(0+60, 0.00)	(1+00, 4.84)	0.040

Options

Current Roughness Weighted Method	Pavlovskii's Method
Open Channel Weighting Method	Pavlovskii's Method
Closed Channel Weighting Method	Pavlovskii's Method

Results

Normal Depth	2.8 in
Roughness Coefficient	0.040
Elevation	0.23 ft
Elevation Range	0.0 to 4.8 ft
Flow Area	7.3 ft²
Wetted Perimeter	33.2 ft
Hydraulic Radius	2.6 in
Top Width	33.21 ft
Normal Depth	2.8 in
Critical Depth	3.5 in
Critical Slope	0.036 ft/ft
Velocity	3.69 ft/s
Velocity Head	0.21 ft
Specific Energy	0.45 ft
Froude Number	1.388
Flow Type	Supercritical

Worksheet for B1-2

GVF Input Data	
Downstream Depth	0.0 in
Length	0.0 ft
Number Of Steps	0

GVF Output Data	
Upstream Depth	0.0 in
Profile Description	N/A
Profile Headloss	0.00 ft
Downstream Velocity	Infinity ft/s
Upstream Velocity	Infinity ft/s
Normal Depth	2.8 in
Critical Depth	3.5 in
Channel Slope	0.075 ft/ft
Critical Slope	0.036 ft/ft

Worksheet for B1-3

Project Description

Friction Method	Manning Formula
Solve For	Normal Depth

Input Data

Channel Slope	0.033 ft/ft
Discharge	25.20 cfs

Section Definitions

Station (ft)	Elevation (ft)
0+00	19.00
0+45	14.00
0+56	14.00
0+98	18.00

Roughness Segment Definitions

Start Station	Ending Station	Roughness Coefficient
(0+00, 19.00)	(0+45, 14.00)	0.040
(0+45, 14.00)	(0+56, 14.00)	0.040
(0+56, 14.00)	(0+98, 18.00)	0.040

Options

Current Roughness Weighted Method	Pavlovskii's Method
Open Channel Weighting Method	Pavlovskii's Method
Closed Channel Weighting Method	Pavlovskii's Method

Results

Normal Depth	5.5 in
Roughness Coefficient	0.040
Elevation	14.46 ft
Elevation Range	14.0 to 19.0 ft
Flow Area	7.4 ft²
Wetted Perimeter	20.6 ft
Hydraulic Radius	4.3 in
Top Width	20.59 ft
Normal Depth	5.5 in
Critical Depth	5.5 in
Critical Slope	0.033 ft/ft
Velocity	3.41 ft/s
Velocity Head	0.18 ft
Specific Energy	0.64 ft
Froude Number	1.002

Worksheet for B1-3

Results	
Flow Type	Supercritical

GVF Input Data	
Downstream Depth	0.0 in
Length	0.0 ft
Number Of Steps	0

GVF Output Data	
Upstream Depth	0.0 in
Profile Description	N/A
Profile Headloss	0.00 ft
Downstream Velocity	Infinity ft/s
Upstream Velocity	Infinity ft/s
Normal Depth	5.5 in
Critical Depth	5.5 in
Channel Slope	0.033 ft/ft
Critical Slope	0.033 ft/ft

Worksheet for B1-4

Project Description

Friction Method	Manning Formula
Solve For	Normal Depth

Input Data

Channel Slope	0.063 ft/ft
Discharge	7.56 cfs

Section Definitions

Station (ft)	Elevation (ft)
0+00	34.00
0+26	30.00
0+47	30.00
0+75	35.00

Roughness Segment Definitions

Start Station	Ending Station	Roughness Coefficient
(0+00, 34.00)	(0+26, 30.00)	0.040
(0+26, 30.00)	(0+47, 30.00)	0.040
(0+47, 30.00)	(0+75, 35.00)	0.040

Options

Current Roughness Weighted Method	Pavlovskii's Method
Open Channel Weighting Method	Pavlovskii's Method
Closed Channel Weighting Method	Pavlovskii's Method

Results

Normal Depth	1.7 in
Roughness Coefficient	0.040
Elevation	30.14 ft
Elevation Range	30.0 to 35.0 ft
Flow Area	3.1 ft²
Wetted Perimeter	22.5 ft
Hydraulic Radius	1.6 in
Top Width	22.47 ft
Normal Depth	1.7 in
Critical Depth	1.9 in
Critical Slope	0.044 ft/ft
Velocity	2.47 ft/s
Velocity Head	0.09 ft
Specific Energy	0.24 ft
Froude Number	1.180

Worksheet for B1-4

Results	
Flow Type	Supercritical

GVF Input Data	
Downstream Depth	0.0 in
Length	0.0 ft
Number Of Steps	0

GVF Output Data	
Upstream Depth	0.0 in
Profile Description	N/A
Profile Headloss	0.00 ft
Downstream Velocity	Infinity ft/s
Upstream Velocity	Infinity ft/s
Normal Depth	1.7 in
Critical Depth	1.9 in
Channel Slope	0.063 ft/ft
Critical Slope	0.044 ft/ft

Worksheet for B1-5

Project Description

Friction Method	Manning Formula
Solve For	Normal Depth

Input Data

Channel Slope	0.039 ft/ft
Discharge	4.77 cfs

Section Definitions

Station (ft)	Elevation (ft)
0+00	35.00
0+29	32.00
0+54	32.00
0+73	35.00

Roughness Segment Definitions

Start Station	Ending Station	Roughness Coefficient
(0+00, 35.00)	(0+29, 32.00)	0.040
(0+29, 32.00)	(0+54, 32.00)	0.040
(0+54, 32.00)	(0+73, 35.00)	0.040

Options

Current Roughness Weighted Method	Pavlovskii's Method
Open Channel Weighting Method	Pavlovskii's Method
Closed Channel Weighting Method	Pavlovskii's Method

Results

Normal Depth	1.3 in
Roughness Coefficient	0.040
Elevation	32.11 ft
Elevation Range	32.0 to 35.0 ft
Flow Area	2.9 ft²
Wetted Perimeter	27.0 ft
Hydraulic Radius	1.3 in
Top Width	27.02 ft
Normal Depth	1.3 in
Critical Depth	1.2 in
Critical Slope	0.050 ft/ft
Velocity	1.65 ft/s
Velocity Head	0.04 ft
Specific Energy	0.15 ft
Froude Number	0.890

Worksheet for B1-5

Results	
Flow Type	Subcritical

GVF Input Data	
Downstream Depth	0.0 in
Length	0.0 ft
Number Of Steps	0

GVF Output Data	
Upstream Depth	0.0 in
Profile Description	N/A
Profile Headloss	0.00 ft
Downstream Velocity	0.00 ft/s
Upstream Velocity	0.00 ft/s
Normal Depth	1.3 in
Critical Depth	1.2 in
Channel Slope	0.039 ft/ft
Critical Slope	0.050 ft/ft

Worksheet for B1-6

Project Description

Friction Method	Manning Formula
Solve For	Normal Depth

Input Data

Channel Slope	0.030 ft/ft
Discharge	5.10 cfs

Section Definitions

Station (ft)	Elevation (ft)
0+00	22.00
0+35	18.00
0+51	18.00
0+92	23.00

Roughness Segment Definitions

Start Station	Ending Station	Roughness Coefficient
(0+00, 22.00)	(0+35, 18.00)	0.040
(0+35, 18.00)	(0+51, 18.00)	0.040
(0+51, 18.00)	(0+92, 23.00)	0.040

Options

Current Roughness Weighted Method	Pavlovskii's Method
Open Channel Weighting Method	Pavlovskii's Method
Closed Channel Weighting Method	Pavlovskii's Method

Results

Normal Depth	1.9 in
Roughness Coefficient	0.040
Elevation	18.16 ft
Elevation Range	18.0 to 23.0 ft
Flow Area	2.8 ft²
Wetted Perimeter	19.0 ft
Hydraulic Radius	1.8 in
Top Width	18.96 ft
Normal Depth	1.9 in
Critical Depth	1.7 in
Critical Slope	0.046 ft/ft
Velocity	1.81 ft/s
Velocity Head	0.05 ft
Specific Energy	0.21 ft
Froude Number	0.825

Worksheet for B1-6

Results	
Flow Type	Subcritical

GVF Input Data	
Downstream Depth	0.0 in
Length	0.0 ft
Number Of Steps	0

GVF Output Data	
Upstream Depth	0.0 in
Profile Description	N/A
Profile Headloss	0.00 ft
Downstream Velocity	0.00 ft/s
Upstream Velocity	0.00 ft/s
Normal Depth	1.9 in
Critical Depth	1.7 in
Channel Slope	0.030 ft/ft
Critical Slope	0.046 ft/ft

Worksheet for B2-1

Project Description

Friction Method	Manning Formula
Solve For	Normal Depth

Input Data

Channel Slope	0.037 ft/ft
Discharge	11.64 cfs

Section Definitions

Station (ft)	Elevation (ft)
0+00	5.00
0+42	0.00
0+58	0.00
0+75	4.50

Roughness Segment Definitions

Start Station	Ending Station	Roughness Coefficient
(0+00, 5.00)	(0+42, 0.00)	0.040
(0+42, 0.00)	(0+58, 0.00)	0.040
(0+58, 0.00)	(0+75, 4.50)	0.040

Options

Current Roughness Weighted Method	Pavlovskii's Method
Open Channel Weighting Method	Pavlovskii's Method
Closed Channel Weighting Method	Pavlovskii's Method

Results

Normal Depth	3.0 in
Roughness Coefficient	0.040
Elevation	0.25 ft
Elevation Range	0.0 to 5.0 ft
Flow Area	4.4 ft²
Wetted Perimeter	19.1 ft
Hydraulic Radius	2.7 in
Top Width	19.03 ft
Normal Depth	3.0 in
Critical Depth	3.0 in
Critical Slope	0.038 ft/ft
Velocity	2.67 ft/s
Velocity Head	0.11 ft
Specific Energy	0.36 ft
Froude Number	0.982
Flow Type	Subcritical

Worksheet for B2-1

GVF Input Data	
Downstream Depth	0.0 in
Length	0.0 ft
Number Of Steps	0

GVF Output Data	
Upstream Depth	0.0 in
Profile Description	N/A
Profile Headloss	0.00 ft
Downstream Velocity	0.00 ft/s
Upstream Velocity	0.00 ft/s
Normal Depth	3.0 in
Critical Depth	3.0 in
Channel Slope	0.037 ft/ft
Critical Slope	0.038 ft/ft

Worksheet for B2-2

Project Description

Friction Method	Manning Formula
Solve For	Normal Depth

Input Data

Channel Slope	0.054 ft/ft
Discharge	23.11 cfs

Section Definitions

Station (ft)	Elevation (ft)
0+00	13.00
0+38	8.00
0+59	8.00
0+96	13.00

Roughness Segment Definitions

Start Station	Ending Station	Roughness Coefficient
(0+00, 13.00)	(0+38, 8.00)	0.040
(0+38, 8.00)	(0+59, 8.00)	0.040
(0+59, 8.00)	(0+96, 13.00)	0.040

Options

Current Roughness Weighted Method	Pavlovskii's Method
Open Channel Weighting Method	Pavlovskii's Method
Closed Channel Weighting Method	Pavlovskii's Method

Results

Normal Depth	3.4 in
Roughness Coefficient	0.040
Elevation	8.28 ft
Elevation Range	8.0 to 13.0 ft
Flow Area	6.6 ft²
Wetted Perimeter	25.3 ft
Hydraulic Radius	3.1 in
Top Width	25.26 ft
Normal Depth	3.4 in
Critical Depth	3.9 in
Critical Slope	0.035 ft/ft
Velocity	3.52 ft/s
Velocity Head	0.19 ft
Specific Energy	0.48 ft
Froude Number	1.215
Flow Type	Supercritical

Worksheet for B2-2

GVF Input Data	
Downstream Depth	0.0 in
Length	0.0 ft
Number Of Steps	0

GVF Output Data	
Upstream Depth	0.0 in
Profile Description	N/A
Profile Headloss	0.00 ft
Downstream Velocity	Infinity ft/s
Upstream Velocity	Infinity ft/s
Normal Depth	3.4 in
Critical Depth	3.9 in
Channel Slope	0.054 ft/ft
Critical Slope	0.035 ft/ft

Worksheet for B6-1

Project Description

Friction Method	Manning Formula
Solve For	Normal Depth

Input Data

Channel Slope	0.190 ft/ft
Discharge	23.09 cfs

Section Definitions

Station (ft)	Elevation (ft)
0+00	14.00
0+39	6.00
0+50	6.00
0+63	11.50

Roughness Segment Definitions

Start Station	Ending Station	Roughness Coefficient
(0+00, 14.00)	(0+39, 6.00)	0.040
(0+39, 6.00)	(0+50, 6.00)	0.040
(0+50, 6.00)	(0+63, 11.50)	0.040

Options

Current Roughness Weighted Method	Pavlovskii's Method
Open Channel Weighting Method	Pavlovskii's Method
Closed Channel Weighting Method	Pavlovskii's Method

Results

Normal Depth	3.5 in
Roughness Coefficient	0.040
Elevation	6.29 ft
Elevation Range	6.0 to 14.0 ft
Flow Area	3.5 ft²
Wetted Perimeter	13.2 ft
Hydraulic Radius	3.2 in
Top Width	13.09 ft
Normal Depth	3.5 in
Critical Depth	5.9 in
Critical Slope	0.031 ft/ft
Velocity	6.66 ft/s
Velocity Head	0.69 ft
Specific Energy	0.98 ft
Froude Number	2.279
Flow Type	Supercritical

Worksheet for B6-1

GVF Input Data	
Downstream Depth	0.0 in
Length	0.0 ft
Number Of Steps	0

GVF Output Data	
Upstream Depth	0.0 in
Profile Description	N/A
Profile Headloss	0.00 ft
Downstream Velocity	Infinity ft/s
Upstream Velocity	Infinity ft/s
Normal Depth	3.5 in
Critical Depth	5.9 in
Channel Slope	0.190 ft/ft
Critical Slope	0.031 ft/ft

Worksheet for B7-1

Project Description

Friction Method	Manning Formula
Solve For	Normal Depth

Input Data

Channel Slope	0.046 ft/ft
Discharge	5.64 cfs

Section Definitions

Station (ft)	Elevation (ft)
0+00	95.00
0+25	92.00
0+50	91.75
0+90	98.00

Roughness Segment Definitions

Start Station	Ending Station	Roughness Coefficient
(0+00, 95.00)	(0+25, 92.00)	0.040
(0+25, 92.00)	(0+50, 91.75)	0.040
(0+50, 91.75)	(0+90, 98.00)	0.040

Options

Current Roughness Weighted Method	Pavlovskii's Method
Open Channel Weighting Method	Pavlovskii's Method
Closed Channel Weighting Method	Pavlovskii's Method

Results

Normal Depth	2.8 in
Roughness Coefficient	0.040
Elevation	91.99 ft
Elevation Range	91.8 to 98.0 ft
Flow Area	2.9 ft²
Wetted Perimeter	25.1 ft
Hydraulic Radius	1.4 in
Top Width	25.05 ft
Normal Depth	2.8 in
Critical Depth	2.8 in
Critical Slope	0.048 ft/ft
Velocity	1.91 ft/s
Velocity Head	0.06 ft
Specific Energy	0.29 ft
Froude Number	0.983

Worksheet for B7-1

Results	
Flow Type	Subcritical

GVF Input Data	
Downstream Depth	0.0 in
Length	0.0 ft
Number Of Steps	0

GVF Output Data	
Upstream Depth	0.0 in
Profile Description	N/A
Profile Headloss	0.00 ft
Downstream Velocity	0.00 ft/s
Upstream Velocity	0.00 ft/s
Normal Depth	2.8 in
Critical Depth	2.8 in
Channel Slope	0.046 ft/ft
Critical Slope	0.048 ft/ft

Worksheet for B8-1

Project Description

Friction Method	Manning Formula
Solve For	Normal Depth

Input Data

Channel Slope	0.050 ft/ft
Discharge	118.80 cfs

Section Definitions

Station (ft)	Elevation (ft)
0+00	202.00
0+52	198.00
0+79	198.00
1+06	201.00

Roughness Segment Definitions

Start Station	Ending Station	Roughness Coefficient
(0+00, 202.00)	(0+52, 198.00)	0.040
(0+52, 198.00)	(0+79, 198.00)	0.040
(0+79, 198.00)	(1+06, 201.00)	0.040

Options

Current Roughness Weighted Method	Pavlovskii's Method
Open Channel Weighting Method	Pavlovskii's Method
Closed Channel Weighting Method	Pavlovskii's Method

Results

Normal Depth	7.7 in
Roughness Coefficient	0.040
Elevation	198.64 ft
Elevation Range	198.0 to 202.0 ft
Flow Area	21.8 ft²
Wetted Perimeter	41.2 ft
Hydraulic Radius	6.4 in
Top Width	41.10 ft
Normal Depth	7.7 in
Critical Depth	9.1 in
Critical Slope	0.028 ft/ft
Velocity	5.44 ft/s
Velocity Head	0.46 ft
Specific Energy	1.10 ft
Froude Number	1.317

Worksheet for B8-1

Results	
Flow Type	Supercritical

GVF Input Data	
Downstream Depth	0.0 in
Length	0.0 ft
Number Of Steps	0

GVF Output Data	
Upstream Depth	0.0 in
Profile Description	N/A
Profile Headloss	0.00 ft
Downstream Velocity	Infinity ft/s
Upstream Velocity	Infinity ft/s
Normal Depth	7.7 in
Critical Depth	9.1 in
Channel Slope	0.050 ft/ft
Critical Slope	0.028 ft/ft

Culvert & Riprap Summary														
Culvert Details							*Riprap Details (Low Tailwater Basin Design)*							
Culvert ID	Basin	Q100 flow (cfs)	Flow % of Basin	Flows (cfs)	HW/D Ratio	Diameter (in)	Top Length (ft)	Bottom Width (ft)	Top Width (ft)	D50 Type	D50 Size (in)	D50 Thickness (D) (in)	Normal Depth in Pipe (ft)	Upstream Headwater Elevation (ft)
A2-A	A2	93.46	10.00%	9.35	1.39	18	15	4	10	VL	6	12	0.75	7211.99
A2-B	A2	93.46	8.00%	7.48	1.12	18	15	4	10	VL	6	12	0.56	7221.58
A2-C	A2	93.46	49.00%	45.80	1.21	36	20	6	15	L	9	18	1.17	7224.11
A2-D	A2	93.46	11.00%	10.28	1.52	18	15	4	10	VL	6	12	0.60	7320.27
B1-A	B1	80.40	28.00%	22.51	0.99	30	20	6	15	L	9	18	0.85	7218.48
B1-B	B1	80.40	34.00%	27.34	1.14	30	20	6	15	L	9	18	0.90	7224.85
B6-A	B6	104.60	100.00%	104.60	1.39	36 (3 Barrels)	24	7	27	M	12	24	1.91	7233.42
B6-B	B6	104.60	2.00%	5.63	0.91	18	15	4	10	VL	6	12	0.47	7246.36
B6-C	B6	104.60	1.00%	3.26	1.28	12	15	4	10	VL	6	12	0.32	7340.58
EDB A2 OUTFALL	(Used pond outfall diameter sizing for final pond installation)					42	24	7	19	L	9	18		
EDB B1 OUTFALL	(Used pond outfall diameter sizing for final pond installation)					36	20	6	15	L	9	18		
EDB B6 OUTFALL	(Used pond outfall diameter sizing for final pond installation)					42	24	7	19	L	9	18		

Please include the normal velocity for both minor and major storms. Printed profiles with HGL5 and HGL100 are required.

POND OUTFALL PIPE STORMCAD PROFILES AND FLEX TABLES INCLUDINING VELOCITY FOR MAJOR AND MINOR STORMS HAVE BEEN INCLUDED IN APPENDIX.

DETERMINATION OF CULVERT HEADWATER AND OUTLET PROTECTION

MHFD-Culvert, Version 4.00 (May 2020)

Project: OVERLOOK
ID: CULVERT A1

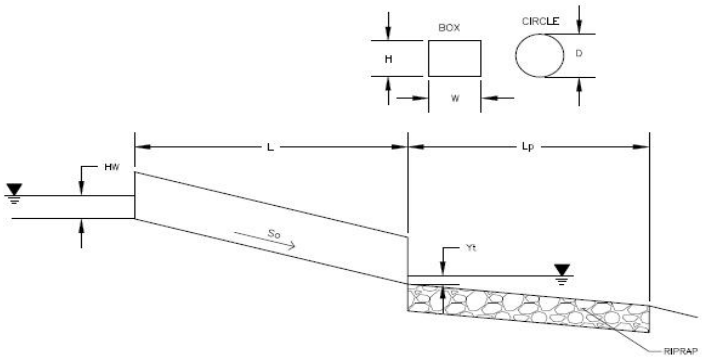

Soil Type:
Choose One:
(●) Sandy
( ) Non-Sandy

Design Information:			
Design Discharge	Q =	41.42	cfs
Circular Culvert:			
Barrel Diameter in Inches	D =	36	inches
Inlet Edge Type (Choose from pull-down list)		Square Edge with Headwall	
OR:			
Box Culvert:		OR	
Barrel Height (Rise) in Feet	H (Rise) =		ft
Barrel Width (Span) in Feet	W (Span) =		ft
Inlet Edge Type (Choose from pull-down list)			
Number of Barrels	# Barrels =	1	
Inlet Elevation	Elev IN =	7204.67	ft
Outlet Elevation OR Slope	Elev OUT =	7204.42	ft
Culvert Length	L =	68.15	ft
Manning's Roughness	n =	0.012	
Bend Loss Coefficient	k_b =	0	
Exit Loss Coefficient	k_x =	1	
Tailwater Surface Elevation	$Y_{t,\ Elevation}$ =		ft
Max Allowable Channel Velocity	V =	5	ft/s
Calculated Results:			
Culvert Cross Sectional Area Available	A =	7.07	ft^2
Culvert Normal Depth	Y_n =	2.32	ft
Culvert Critical Depth	Y_c =	2.10	ft
Froude Number	Fr =	0.81	
Entrance Loss Coefficient	k_e =	0.50	
Friction Loss Coefficient	k_f =	0.42	
Sum of All Loss Coefficients	k_s =	1.92	ft
Headwater:			
Inlet Control Headwater	HW_I =	3.39	ft
Outlet Control Headwater	HW_O =	3.32	ft
Design Headwater Elevation	HW =	7208.06	ft
Headwater/Diameter OR Headwater/Rise Ratio	HW/D =	1.13	
Outlet Protection:			
Flow/(Diameter^2.5)	Q/D^2.5 =	2.66	$ft^{0.5}/s$
Tailwater Surface Height	Y_t =	1.20	ft
Tailwater/Diameter	Yt/D =	0.40	
Expansion Factor	1/(2*tan(Θ)) =	4.85	
Flow Area at Max Channel Velocity	A_t =	8.28	ft^2
Width of Equivalent Conduit for Multiple Barrels	W_{eq} =	-	ft
Length of Riprap Protection	L_p =	19	ft
Width of Riprap Protection at Downstream End	T =	7	ft
Adjusted Diameter for Supercritical Flow	Da =	-	ft
Minimum Theoretical Riprap Size	d_{50} min=	7	in
Nominal Riprap Size	d_{50} nominal=	9	in
MHFD Riprap Type	Type =	L	

DETERMINATION OF CULVERT HEADWATER AND OUTLET PROTECTION

MHFD-Culvert, Version 4.00 (May 2020)

Project: OVERLOOK
ID: CULVERT A2-A

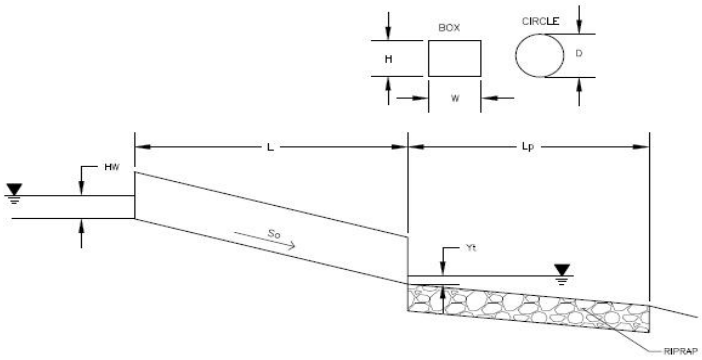

Soil Type:
Choose One:
(●) Sandy
( ) Non-Sandy

Supercritical Flow! Using Adjusted Diameter to calculate protection type.

Design Information:

Design Discharge	Q =	9.3	cfs
Circular Culvert:			
Barrel Diameter in Inches	D =	18	inches
Inlet Edge Type (Choose from pull-down list)		Square Edge with Headwall	
OR:			
Box Culvert:		OR	
Barrel Height (Rise) in Feet	H (Rise) =		ft
Barrel Width (Span) in Feet	W (Span) =		ft
Inlet Edge Type (Choose from pull-down list)			
Number of Barrels	# Barrels =	1	
Inlet Elevation	Elev IN =	7209.75	ft
Outlet Elevation OR Slope	Elev OUT =	7207.31	ft
Culvert Length	L =	93	ft
Manning's Roughness	n =	0.012	
Bend Loss Coefficient	k_b =	0	
Exit Loss Coefficient	k_x =	1	
Tailwater Surface Elevation	$Y_{t,\ Elevation}$ =		ft
Max Allowable Channel Velocity	V =	5	ft/s

Calculated Results:

Culvert Cross Sectional Area Available	A =	1.77	ft^2
Culvert Normal Depth	Y_n =	0.75	ft
Culvert Critical Depth	Y_c =	1.18	ft
Froude Number	Fr =	2.40	Supercritical!
Entrance Loss Coefficient	k_e =	0.50	
Friction Loss Coefficient	k_f =	1.44	
Sum of All Loss Coefficients	k_s =	2.94	ft
Headwater:			
Inlet Control Headwater	HW_I =	2.08	ft
Outlet Control Headwater	HW_O =	N/A	ft
Design Headwater Elevation	HW =	7211.83	ft
Headwater/Diameter OR Headwater/Rise Ratio	HW/D =	1.39	

Outlet Control Headwater Approximation Method Inaccurate for Low Flow - Backwater Calculations Required

Outlet Protection:			
Flow/(Diameter^2.5)	Q/D^2.5 =	3.37	$ft^{0.5}/s$
Tailwater Surface Height	Y_t =	0.60	ft
Tailwater/Diameter	Yt/D =	0.40	
Expansion Factor	1/(2*tan(Θ)) =	4.05	
Flow Area at Max Channel Velocity	A_t =	1.86	ft^2
Width of Equivalent Conduit for Multiple Barrels	W_{eq} =	-	ft
Length of Riprap Protection	L_p =	7	ft
Width of Riprap Protection at Downstream End	T =	4	ft
Adjusted Diameter for Supercritical Flow	Da =	1.13	ft
Minimum Theoretical Riprap Size	d_{50} min=	5	in
Nominal Riprap Size	d_{50} nominal=	6	in
MHFD Riprap Type	Type =	VL	

DETERMINATION OF CULVERT HEADWATER AND OUTLET PROTECTION

MHFD-Culvert, Version 4.00 (May 2020)

Project: OVERLOOK
ID: CULVERT A2-B

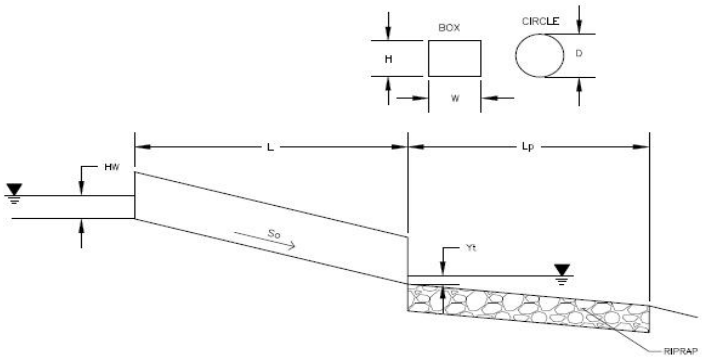

Soil Type:
Choose One:
(●) Sandy
( ) Non-Sandy

Supercritical Flow! Using Adjusted Diameter to calculate protection type.

Design Information:

Design Discharge	Q =	7.44	cfs
Circular Culvert:			
Barrel Diameter in Inches	D =	18	inches
Inlet Edge Type (Choose from pull-down list)		Square Edge with Headwall	
OR:			
Box Culvert:		OR	
Barrel Height (Rise) in Feet	H (Rise) =		ft
Barrel Width (Span) in Feet	W (Span) =		ft
Inlet Edge Type (Choose from pull-down list)			
Number of Barrels	# Barrels =	1	
Inlet Elevation	Elev IN =	7219.6	ft
Outlet Elevation OR Slope	Elev OUT =	7215.35	ft
Culvert Length	L =	87.8	ft
Manning's Roughness	n =	0.012	
Bend Loss Coefficient	k_b =	0	
Exit Loss Coefficient	k_x =	1	
Tailwater Surface Elevation	$Y_{t,\ Elevation}$ =		ft
Max Allowable Channel Velocity	V =	5	ft/s

Calculated Results:

Culvert Cross Sectional Area Available	A =	1.77	ft^2
Culvert Normal Depth	Y_n =	0.56	ft
Culvert Critical Depth	Y_c =	1.06	ft
Froude Number	Fr =	3.39	Supercritical!
Entrance Loss Coefficient	k_e =	0.50	
Friction Loss Coefficient	k_f =	1.36	
Sum of All Loss Coefficients	k_s =	2.86	ft
Headwater:			
Inlet Control Headwater	HW_I =	1.68	ft
Outlet Control Headwater	HW_O =	N/A	ft
Design Headwater Elevation	HW =	7221.28	ft
Headwater/Diameter OR Headwater/Rise Ratio	HW/D =	1.12	

Outlet Control Headwater Approximation Method Inaccurate for Low Flow - Backwater Calculations Required

Outlet Protection:			
Flow/(Diameter^2.5)	Q/D^2.5 =	2.70	$ft^{0.5}/s$
Tailwater Surface Height	Y_t =	0.60	ft
Tailwater/Diameter	Yt/D =	0.40	
Expansion Factor	1/(2*tan(Θ)) =	4.79	
Flow Area at Max Channel Velocity	A_t =	1.49	ft^2
Width of Equivalent Conduit for Multiple Barrels	W_{eq} =	-	ft
Length of Riprap Protection	L_p =	5	ft
Width of Riprap Protection at Downstream End	T =	3	ft
Adjusted Diameter for Supercritical Flow	Da =	1.03	ft
Minimum Theoretical Riprap Size	d_{50} min=	4	in
Nominal Riprap Size	d_{50} nominal=	6	in
MHFD Riprap Type	Type =	VL	

DETERMINATION OF CULVERT HEADWATER AND OUTLET PROTECTION

MHFD-Culvert, Version 4.00 (May 2020)

Project: OVERLOOK
ID: CULVERT A2-C

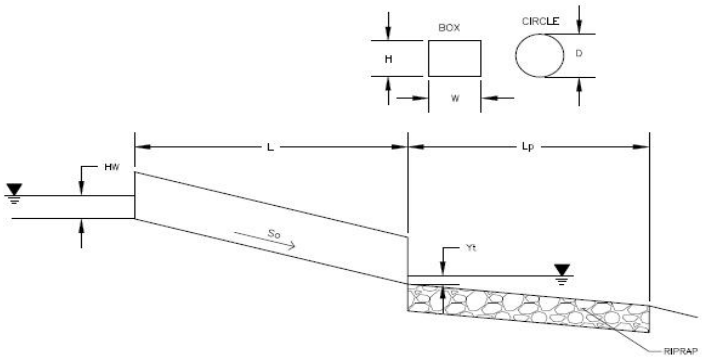

Soil Type:
Choose One:
(●) Sandy
( ) Non-Sandy

Supercritical Flow! Using Adjusted Diameter to calculate protection type.

Design Information:

Design Discharge	Q =	45.55	cfs
Circular Culvert:			
Barrel Diameter in Inches	D =	36	inches
Inlet Edge Type (Choose from pull-down list)		Square Edge with Headwall	
OR:			
Box Culvert:		OR	
Barrel Height (Rise) in Feet	H (Rise) =		ft
Barrel Width (Span) in Feet	W (Span) =		ft
Inlet Edge Type (Choose from pull-down list)			
Number of Barrels	# Barrels =	1	
Inlet Elevation	Elev IN =	7220.18	ft
Outlet Elevation OR Slope	Elev OUT =	7216.35	ft
Culvert Length	L =	101.4	ft
Manning's Roughness	n =	0.012	
Bend Loss Coefficient	k_b =	0	
Exit Loss Coefficient	k_x =	1	
Tailwater Surface Elevation	$Y_{t,\ Elevation}$ =		ft
Max Allowable Channel Velocity	V =	5	ft/s

Calculated Results:

Culvert Cross Sectional Area Available	A =	7.07	ft^2
Culvert Normal Depth	Y_n =	1.17	ft
Culvert Critical Depth	Y_c =	2.20	ft
Froude Number	Fr =	3.35	Supercritical!
Entrance Loss Coefficient	k_e =	0.50	
Friction Loss Coefficient	k_f =	0.62	
Sum of All Loss Coefficients	k_s =	2.12	ft
Headwater:			
Inlet Control Headwater	HW_I =	3.62	ft
Outlet Control Headwater	HW_O =	N/A	ft
Design Headwater Elevation	HW =	7223.80	ft
Headwater/Diameter OR Headwater/Rise Ratio	HW/D =	1.21	

Outlet Control Headwater Approximation Method Inaccurate for Low Flow - Backwater Calculations Required

Outlet Protection:			
Flow/(Diameter^2.5)	Q/D^2.5 =	2.92	$ft^{0.5}/s$
Tailwater Surface Height	Y_t =	1.20	ft
Tailwater/Diameter	Yt/D =	0.40	
Expansion Factor	1/(2*tan(Θ)) =	4.49	
Flow Area at Max Channel Velocity	A_t =	9.11	ft^2
Width of Equivalent Conduit for Multiple Barrels	W_{eq} =	-	ft
Length of Riprap Protection	L_p =	21	ft
Width of Riprap Protection at Downstream End	T =	8	ft
Adjusted Diameter for Supercritical Flow	Da =	2.09	ft
Minimum Theoretical Riprap Size	d_{50} min=	8	in
Nominal Riprap Size	d_{50} nominal=	9	in
MHFD Riprap Type	Type =	L	

DETERMINATION OF CULVERT HEADWATER AND OUTLET PROTECTION

MHFD-Culvert, Version 4.00 (May 2020)

Project: Overlook
ID: A2-D

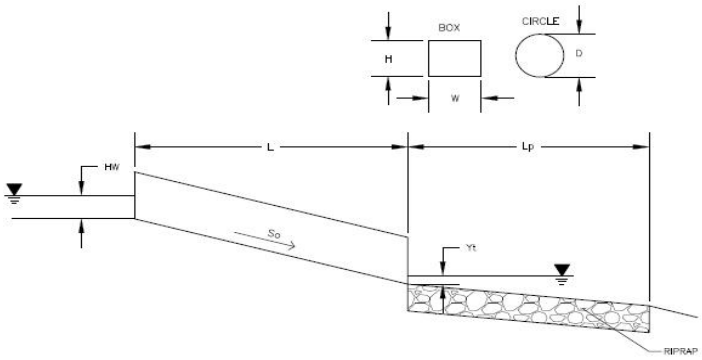

Soil Type:
Choose One:
(●) Sandy
( ) Non-Sandy

Supercritical Flow! Using Adjusted Diameter to calculate protection type.

Design Information:

Design Discharge	Q =	10.23	cfs
Circular Culvert:			
Barrel Diameter in Inches	D =	24	inches
Inlet Edge Type (Choose from pull-down list)		Square Edge with Headwall	
OR:			
Box Culvert:		OR	
Barrel Height (Rise) in Feet	H (Rise) =		ft
Barrel Width (Span) in Feet	W (Span) =		ft
Inlet Edge Type (Choose from pull-down list)			
Number of Barrels	# Barrels =	1	
Inlet Elevation	Elev IN =	7313.3	ft
Outlet Elevation OR Slope	Elev OUT =	7312.4	ft
Culvert Length	L =	86.6	ft
Manning's Roughness	n =	0.012	
Bend Loss Coefficient	k_b =	0	
Exit Loss Coefficient	k_x =	1	
Tailwater Surface Elevation	$Y_{t,\ Elevation}$ =		ft
Max Allowable Channel Velocity	V =	5	ft/s

Calculated Results:

Culvert Cross Sectional Area Available	A =	3.14	ft^2
Culvert Normal Depth	Y_n =	0.89	ft
Culvert Critical Depth	Y_c =	1.14	ft
Froude Number	Fr =	1.62	Supercritical!
Entrance Loss Coefficient	k_e =	0.50	
Friction Loss Coefficient	k_f =	0.91	
Sum of All Loss Coefficients	k_s =	2.41	ft
Headwater:			
Inlet Control Headwater	HW_I =	1.72	ft
Outlet Control Headwater	HW_O =	N/A	ft
Design Headwater Elevation	HW =	7315.02	ft
Headwater/Diameter OR Headwater/Rise Ratio	HW/D =	0.86	

Outlet Control Headwater Approximation Method Inaccurate for Low Flow - Backwater Calculations Required

Outlet Protection:			
Flow/(Diameter^2.5)	Q/D^2.5 =	1.81	$ft^{0.5}/s$
Tailwater Surface Height	Y_t =	0.80	ft
Tailwater/Diameter	Yt/D =	0.40	
Expansion Factor	1/(2*tan(Θ)) =	5.93	
Flow Area at Max Channel Velocity	A_t =	2.05	ft^2
Width of Equivalent Conduit for Multiple Barrels	W_{eq} =	-	ft
Length of Riprap Protection	L_p =	6	ft
Width of Riprap Protection at Downstream End	T =	4	ft
Adjusted Diameter for Supercritical Flow	Da =	1.45	ft
Minimum Theoretical Riprap Size	d_{50} min=	3	in
Nominal Riprap Size	d_{50} nominal=	6	in
MHFD Riprap Type	Type =	VL	

DETERMINATION OF CULVERT HEADWATER AND OUTLET PROTECTION

MHFD-Culvert, Version 4.00 (May 2020)

Project: OVERLOOK
ID: CULVERT B1-A

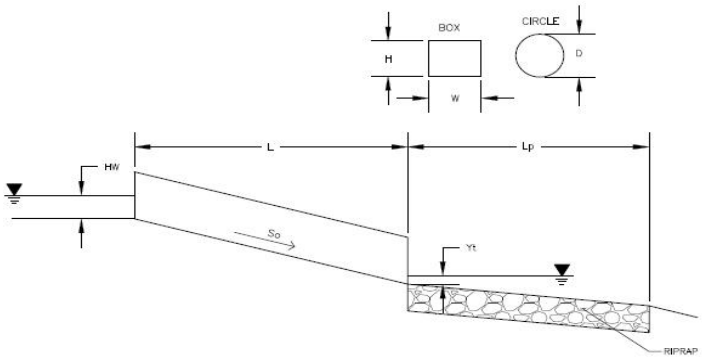

Soil Type:
Choose One:
(●) Sandy
( ) Non-Sandy

Supercritical Flow! Using Adjusted Diameter to calculate protection type.

Design Information:

Design Discharge	Q =	22.51	cfs
Circular Culvert:			
Barrel Diameter in Inches	D =	30	inches
Inlet Edge Type (Choose from pull-down list)		Square Edge with Headwall	
OR:			
Box Culvert:		OR	
Barrel Height (Rise) in Feet	H (Rise) =		ft
Barrel Width (Span) in Feet	W (Span) =		ft
Inlet Edge Type (Choose from pull-down list)			
Number of Barrels	# Barrels =	1	
Inlet Elevation	Elev IN =	7215.76	ft
Outlet Elevation OR Slope	Elev OUT =	7210.52	ft
Culvert Length	L =	125.2	ft
Manning's Roughness	n =	0.012	
Bend Loss Coefficient	k_b =	0	
Exit Loss Coefficient	k_x =	1	
Tailwater Surface Elevation	$Y_{t,\ Elevation}$ =		ft
Max Allowable Channel Velocity	V =	5	ft/s

Calculated Results:

Culvert Cross Sectional Area Available	A =	4.91	ft^2
Culvert Normal Depth	Y_n =	0.85	ft
Culvert Critical Depth	Y_c =	1.61	ft
Froude Number	Fr =	3.45	Supercritical!
Entrance Loss Coefficient	k_e =	0.50	
Friction Loss Coefficient	k_f =	0.98	
Sum of All Loss Coefficients	k_s =	2.48	ft
Headwater:			
Inlet Control Headwater	HW_I =	2.47	ft
Outlet Control Headwater	HW_O =	N/A	ft
Design Headwater Elevation	HW =	7218.23	ft
Headwater/Diameter OR Headwater/Rise Ratio	HW/D =	0.99	

Outlet Control Headwater Approximation Method Inaccurate for Low Flow - Backwater Calculations Required

Outlet Protection:			
Flow/(Diameter^2.5)	Q/D^2.5 =	2.28	$ft^{0.5}/s$
Tailwater Surface Height	Y_t =	1.00	ft
Tailwater/Diameter	Yt/D =	0.40	
Expansion Factor	1/(2*tan(Θ)) =	5.36	
Flow Area at Max Channel Velocity	A_t =	4.50	ft^2
Width of Equivalent Conduit for Multiple Barrels	W_{eq} =	-	ft
Length of Riprap Protection	L_p =	11	ft
Width of Riprap Protection at Downstream End	T =	5	ft
Adjusted Diameter for Supercritical Flow	Da =	1.67	ft
Minimum Theoretical Riprap Size	d_{50} min=	5	in
Nominal Riprap Size	d_{50} nominal=	6	in
MHFD Riprap Type	Type =	VL	

DETERMINATION OF CULVERT HEADWATER AND OUTLET PROTECTION

MHFD-Culvert, Version 4.00 (May 2020)

Project: OVERLOOK
ID: CULVERT B1-B

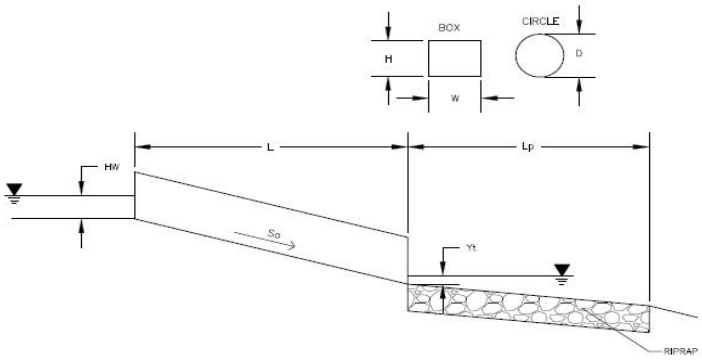

Soil Type:
Choose One:
(●) Sandy
( ) Non-Sandy

Supercritical Flow! Using Adjusted Diameter to calculate protection type.

Design Information:

Design Discharge	Q =	27.34	cfs
Circular Culvert:			
Barrel Diameter in Inches	D =	30	inches
Inlet Edge Type (Choose from pull-down list)		Square Edge with Headwall	
OR:			
Box Culvert:		OR	
Barrel Height (Rise) in Feet	H (Rise) =		ft
Barrel Width (Span) in Feet	W (Span) =		ft
Inlet Edge Type (Choose from pull-down list)			
Number of Barrels	# Barrels =	1	
Inlet Elevation	Elev IN =	7219.01	ft
Outlet Elevation OR Slope	Elev OUT =	7218.46	ft
Culvert Length	L =	68.26	ft
Manning's Roughness	n =	0.012	
Bend Loss Coefficient	k_b =	0	
Exit Loss Coefficient	k_x =	1	
Tailwater Surface Elevation	$Y_{t,\ Elevation}$ =		ft
Max Allowable Channel Velocity	V =	5	ft/s

Calculated Results:

Culvert Cross Sectional Area Available	A =	4.91	ft^2
Culvert Normal Depth	Y_n =	1.52	ft
Culvert Critical Depth	Y_c =	1.78	ft
Froude Number	Fr =	1.37	Supercritical!
Entrance Loss Coefficient	k_e =	0.50	
Friction Loss Coefficient	k_f =	0.53	
Sum of All Loss Coefficients	k_s =	2.03	ft
Headwater:			
Inlet Control Headwater	HW_I =	2.91	ft
Outlet Control Headwater	HW_O =	2.57	ft
Design Headwater Elevation	HW =	7221.92	ft
Headwater/Diameter OR Headwater/Rise Ratio	HW/D =	1.16	
Outlet Protection:			
Flow/(Diameter^2.5)	Q/D^2.5 =	2.77	$ft^{0.5}/s$
Tailwater Surface Height	Y_t =	1.00	ft
Tailwater/Diameter	Yt/D =	0.40	
Expansion Factor	1/(2*tan(Θ)) =	4.70	
Flow Area at Max Channel Velocity	A_t =	5.47	ft^2
Width of Equivalent Conduit for Multiple Barrels	W_{eq} =	-	ft
Length of Riprap Protection	L_p =	14	ft
Width of Riprap Protection at Downstream End	T =	6	ft
Adjusted Diameter for Supercritical Flow	Da =	2.01	ft
Minimum Theoretical Riprap Size	d_{50} min=	6	in
Nominal Riprap Size	d_{50} nominal=	9	in
MHFD Riprap Type	Type =	L	

DETERMINATION OF CULVERT HEADWATER AND OUTLET PROTECTION

MHFD-Culvert, Version 4.00 (May 2020)

Project: Overlook
ID: CULVERT B6

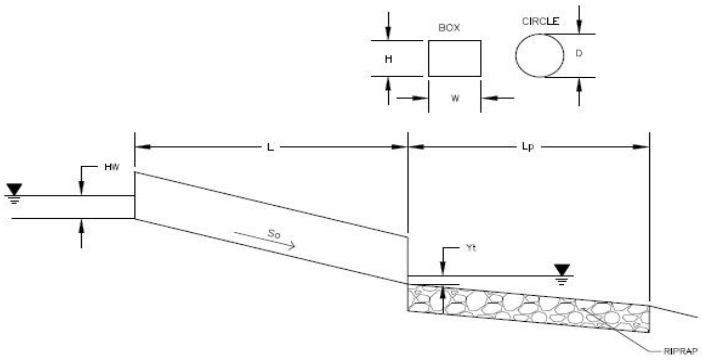

Soil Type:
Choose One:
(●) Sandy
( ) Non-Sandy

Supercritical Flow! Using Adjusted Diameter to calculate protection type.

Design Information:

Design Discharge	Q =	106.95	cfs
Circular Culvert:			
Barrel Diameter in Inches	D =	36	inches
Inlet Edge Type (Choose from pull-down list)		Square Edge with Headwall	
OR:			
Box Culvert:		OR	
Barrel Height (Rise) in Feet	H (Rise) =		ft
Barrel Width (Span) in Feet	W (Span) =		ft
Inlet Edge Type (Choose from pull-down list)			
Number of Barrels	# Barrels =	3	
Inlet Elevation	Elev IN =	7228.05	ft
Outlet Elevation OR Slope	Elev OUT =	7227.55	ft
Culvert Length	L =	51.93	ft
Manning's Roughness	n =	0.012	
Bend Loss Coefficient	k_b =	0	
Exit Loss Coefficient	k_x =	1	
Tailwater Surface Elevation	$Y_{t,\ Elevation}$ =		ft
Max Allowable Channel Velocity	V =	5	ft/s

Calculated Results:

Culvert Cross Sectional Area Available	A =	7.07	ft^2
Culvert Normal Depth	Y_n =	1.50	ft
Culvert Critical Depth	Y_c =	1.94	ft
Froude Number	Fr =	1.63	Supercritical!
Entrance Loss Coefficient	k_e =	0.50	
Friction Loss Coefficient	k_f =	0.32	
Sum of All Loss Coefficients	k_s =	1.82	ft
Headwater:			
Inlet Control Headwater	HW_I =	3.02	ft
Outlet Control Headwater	HW_O =	2.69	ft
Design Headwater Elevation	HW =	7231.07	ft
Headwater/Diameter OR Headwater/Rise Ratio	HW/D =	1.01	
Outlet Protection:			
Flow/(Diameter^2.5)	Q/D^2.5 =	2.29	$ft^{0.5}/s$
Tailwater Surface Height	Y_t =	1.20	ft
Tailwater/Diameter	Yt/D =	0.40	
Expansion Factor	1/(2*tan(Θ)) =	5.35	
Flow Area at Max Channel Velocity	A_t =	21.39	ft^2
Width of Equivalent Conduit for Multiple Barrels	W_{eq} =	9.00	ft
Length of Riprap Protection	L_p =	30	ft
Width of Riprap Protection at Downstream End	T =	15	ft
Adjusted Diameter for Supercritical Flow	Da =	2.25	ft
Minimum Theoretical Riprap Size	d_{50} min=	6	in
Nominal Riprap Size	d_{50} nominal=	9	in
MHFD Riprap Type	Type =	L	

DETERMINATION OF CULVERT HEADWATER AND OUTLET PROTECTION

MHFD-Culvert, Version 4.00 (May 2020)

Project:

ID: B6-A

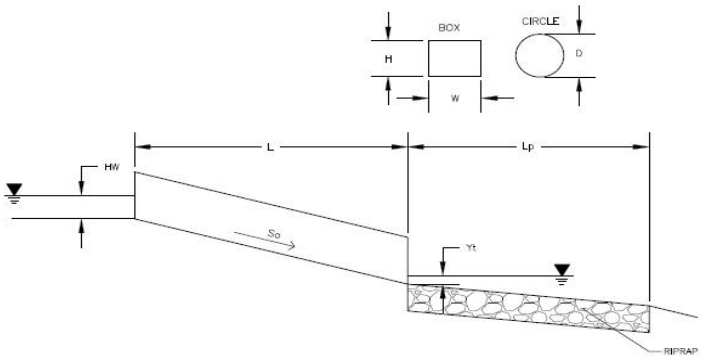

Soil Type:

Choose One:

- ◯ Sandy
- ◯ Non-Sandy

Supercritical Flow! Using Adjusted Diameter to calculate protection type.

Design Information:

Design Discharge	Q =	5.63	cfs
Circular Culvert:			
Barrel Diameter in Inches	D =	18	inches
Inlet Edge Type (Choose from pull-down list)		Square Edge with Headwall	
OR:			
Box Culvert:		OR	
Barrel Height (Rise) in Feet	H (Rise) =		ft
Barrel Width (Span) in Feet	W (Span) =		ft
Inlet Edge Type (Choose from pull-down list)			
Number of Barrels	# Barrels =	1	
Inlet Elevation	Elev IN =	7245	ft
Outlet Elevation OR Slope	Elev OUT =	7244	ft
Culvert Length	L =	18	ft
Manning's Roughness	n =	0.012	
Bend Loss Coefficient	k_b =	0	
Exit Loss Coefficient	k_x =	1	
Tailwater Surface Elevation	$Y_{t,\ Elevation}$ =		ft
Max Allowable Channel Velocity	V =	5	ft/s

Calculated Results:

Culvert Cross Sectional Area Available	A =	1.77	ft^2
Culvert Normal Depth	Y_n =	0.47	ft
Culvert Critical Depth	Y_c =	0.92	ft
Froude Number	Fr =	3.65	Supercritical!
Entrance Loss Coefficient	k_e =	0.50	
Friction Loss Coefficient	k_f =	0.28	
Sum of All Loss Coefficients	k_s =	1.78	ft
Headwater:			
Inlet Control Headwater	HW_I =	1.36	ft
Outlet Control Headwater	HW_O =	N/A	ft
Design Headwater Elevation	HW =	7246.36	ft
Headwater/Diameter OR Headwater/Rise Ratio	HW/D =	0.91	

Outlet Control Headwater Approximation Method Inaccurate for Low Flow - Backwater Calculations Required

Outlet Protection:			
Flow/(Diameter^2.5)	Q/D^2.5 =	2.04	$ft^{0.5}/s$
Tailwater Surface Height	Y_t =	0.60	ft
Tailwater/Diameter	Yt/D =	0.40	
Expansion Factor	1/(2*tan(Θ)) =	5.68	
Flow Area at Max Channel Velocity	A_t =	1.13	ft^2
Width of Equivalent Conduit for Multiple Barrels	W_{eq} =	-	ft
Length of Riprap Protection	L_p =	5	ft
Width of Riprap Protection at Downstream End	T =	3	ft
Adjusted Diameter for Supercritical Flow	Da =	0.98	ft
Minimum Theoretical Riprap Size	d_{50} min=	3	in
Nominal Riprap Size	d_{50} nominal=	6	in
MHFD Riprap Type	Type =	VL	

DETERMINATION OF CULVERT HEADWATER AND OUTLET PROTECTION

MHFD-Culvert, Version 4.00 (May 2020)

Project:

ID: B6-C

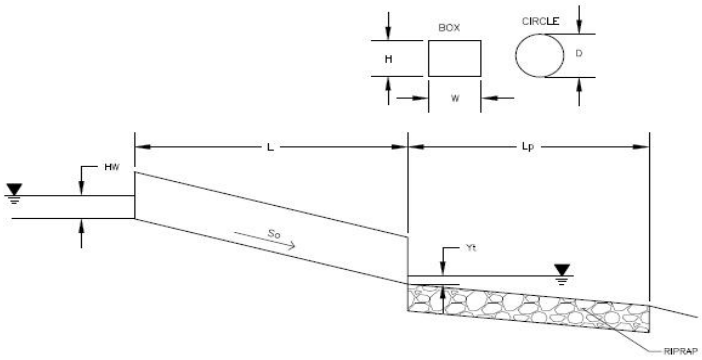

Soil Type:

Choose One:

- (●) Sandy
- ( ) Non-Sandy

Supercritical Flow! Using Adjusted Diameter to calculate protection type.

Design Information:

Design Discharge	Q =	3.26	cfs
Circular Culvert:			
Barrel Diameter in Inches	D =	12	inches
Inlet Edge Type (Choose from pull-down list)		Square Edge with Headwall	
OR:			
Box Culvert:		OR	
Barrel Height (Rise) in Feet	H (Rise) =		ft
Barrel Width (Span) in Feet	W (Span) =		ft
Inlet Edge Type (Choose from pull-down list)			
Number of Barrels	# Barrels =	1	
Inlet Elevation	Elev IN =	7339.3	ft
Outlet Elevation OR Slope	Elev OUT =	7329.5	ft
Culvert Length	L =	68	ft
Manning's Roughness	n =	0.012	
Bend Loss Coefficient	k_b =	0	
Exit Loss Coefficient	k_x =	1	
Tailwater Surface Elevation	$Y_{t,\ Elevation}$ =		ft
Max Allowable Channel Velocity	V =	5	ft/s

Calculated Results:

Culvert Cross Sectional Area Available	A =	0.79	ft^2
Culvert Normal Depth	Y_n =	0.32	ft
Culvert Critical Depth	Y_c =	0.77	ft
Froude Number	Fr =	5.50	Supercritical!
Entrance Loss Coefficient	k_e =	0.50	
Friction Loss Coefficient	k_f =	1.80	
Sum of All Loss Coefficients	k_s =	3.30	ft
Headwater:			
Inlet Control Headwater	HW_I =	1.28	ft
Outlet Control Headwater	HW_O =	N/A	ft
Design Headwater Elevation	HW =	7340.58	ft
Headwater/Diameter OR Headwater/Rise Ratio	HW/D =	1.28	

Outlet Control Headwater Approximation Method Inaccurate for Low Flow - Backwater Calculations Required

Outlet Protection:			
Flow/(Diameter^2.5)	Q/D^2.5 =	3.26	$ft^{0.5}/s$
Tailwater Surface Height	Y_t =	0.40	ft
Tailwater/Diameter	Yt/D =	0.40	
Expansion Factor	1/(2*tan(Θ)) =	4.15	
Flow Area at Max Channel Velocity	A_t =	0.65	ft^2
Width of Equivalent Conduit for Multiple Barrels	W_{eq} =	-	ft
Length of Riprap Protection	L_p =	3	ft
Width of Riprap Protection at Downstream End	T =	2	ft
Adjusted Diameter for Supercritical Flow	Da =	0.66	ft
Minimum Theoretical Riprap Size	d_{50} min=	3	in
Nominal Riprap Size	d_{50} nominal=	6	in
MHFD Riprap Type	Type =	VL	

provide froude number in your analysis

FROUDE NUMBERS ADDED TO SUMMARY TABLE

ROADSIDE DITCH SUMMARY TABLE

ROADWAY	FROM STA	TO STA	PROPOSED SLOPE (%)	SIDE	SIDE SLOPE	CHANNEL DEPTH (FT)	FRICTION FACTOR	BASIN	Q100 FLOW (CFS)	DITCH FLOW % OF BASIN	DITCH FLOW (CFS)	Q100 DEPTH (FT)	Q100 VELOCITY (FT/S)	DITCH LINING	NOTES
HATBAND DRIVE	1+30	2+80	2.75%	LEFT	4:1/3:1	3	0.04	A1	41.29	100.0%	41.29	1.53	5.02	GRASS	
HATBAND DRIVE	1+30	3+40	2.75%	RIGHT	4:1/3:1	3	0.04	A2	92.96	1.0%	0.93	0.37	1.95	GRASS	
HATBAND DRIVE	2+80	3+80	2.75%	LEFT	4:1/3:1	3	0.04	A2	92.96	1.0%	0.93	0.37	1.95	GRASS	
HATBAND DRIVE	4+90	7+20	2.75%	LEFT	4:1/3:1	3	0.04	A2	92.96	1.0%	0.93	0.37	1.95	GRASS	
HATBAND DRIVE	6+13	7+20	2.75%	RIGHT	4:1/3:1	3	0.04	A2	92.96	1.0%	0.93	0.37	1.95	GRASS	
HATBAND DRIVE	12+60	15+00	1.00%	LEFT	4:1/3:1	3	0.04	B1	80.40	0.7%	0.56	0.37	1.17	GRASS	
HATBAND DRIVE	12+60	15+00	1.00%	RIGHT	4:1/3:1	3	0.04	B1	80.40	0.5%	0.40	0.33	1.08	GRASS	
HATBAND DRIVE	15+00	18+00	2.00%	LEFT	4:1/3:1	3	0.04	B1	80.40	25.0%	20.10	1.24	3.72	GRASS	
HATBAND DRIVE	15+00	18+00	2.00%	RIGHT	4:1/3:1	3	0.04	B1	80.40	0.6%	0.48	0.31	1.46	GRASS	
HATBAND DRIVE	19+75	20+45	3.00%	RIGHT	4:1/3:1	3	0.04	B1	80.40	0.1%	0.08	0.14	1.09	GRASS	
HATBAND DRIVE	20+45	22+00	2.00%	RIGHT	4:1/3:1	3	0.04	B2	38.64	1.0%	0.39	0.28	1.39	GRASS	
HATBAND DRIVE	20+20	22+75	2.40%	LEFT	4:1/3:1	3	0.04	B1	80.40	1.3%	1.05	0.40	1.90	GRASS	
SALOON DRIVE	3+30	5+70	1.25%	LEFT	4:1/3:1	3	0.04	A2	92.96	0.40%	0.37	0.30	1.15	GRASS	
SALOON DRIVE	3+30	6+10	1.50%	RIGHT	4:1/3:1	3	0.04	A2	92.96	45.0%	41.83	1.75	4.02	GRASS	
SALOON DRIVE	7+00	10+80	6.00%	LEFT	4:1/3:1	3	0.04	A2	92.96	2.0%	1.86	0.42	3.10	GRASS	
SALOON DRIVE	10+80	END	1.30%	LEFT	4:1/3:1	3	0.04	A2	92.96	1.0%	0.93	0.43	1.47	GRASS	
CAMPOUT DRIVE	7+95	8+90	9.50%	RIGHT	4:1/3:1	3	0.04	B1	80.40	0.2%	0.16	0.15	1.99	GRASS	
CAMPOUT DRIVE	11+10	12+40	7.75%	RIGHT	4:1/3:1	3	0.04	B1	80.40	0.4%	0.32	0.20	2.20	GRASS	
CAMPOUT DRIVE	11+20	14+50	5.15%	LEFT	4:1/3:1	3	0.04	B6	106.95	23.0%	24.60	1.13	5.58	GRASS	
CAMPOUT DRIVE	16+80	25+80	1.00%	LEFT	4:1/3:1	3	0.04	B6	106.95	85.0%	90.91	2.49	4.19	GRASS	
CAMPOUT DRIVE	25+80	END	1.00%	LEFT	4:1/3:1	3	0.04	B6	106.95	13.0%	13.90	1.23	2.62	GRASS	
CAMPOUT DRIVE	27+80	29+60	1.00%	RIGHT	4:1/3:1	3	0.04	B6	106.95	0.3%	0.28	0.28	0.99	GRASS	
APEX RANCH ROAD	START	3+65	2.20%	LEFT	4:1/3:1	3	0.04	OS-C1	59.93	4.3%	15.90*	1.12	3.64	GRASS	* INLCUDES FOLW FROM SUB-BASINS OS-C1, OS-A2, AND A2
APEX RANCH ROAD	3+65	4+85	4.65%	LEFT	4:1/3:1	3	0.04	OS-A2	11.46	27.0%	13.31*	0.91	4.62	GRASS	* INLCUDES FLOW FROM SUB-BASINS OS-A2, AND A2
APEX RANCH ROAD	3+70	4+30	4.20%	RIGHT	4:1/3:1	3	0.04	OS-A2	11.46	1.4%	0.16	0.18	1.47	GRASS	
APEX RANCH ROAD	12+20	16+60	10.00%	LEFT	4:1/3:1	3	0.04	A2	92.96	2.0%	1.86	0.38	3.75	GRASS	
APEX RANCH ROAD	16+60	18+30	5.15%	LEFT	4:1/3:1	3	0.04	A2	92.96	0.7%	0.65	0.28	2.25	GRASS	
APEX RANCH ROAD	12+65	16+60	10.00%	RIGHT	4:1/3:1	3	0.04	B6	106.95	2.0%	2.14	0.40	3.89	GRASS	
APEX RANCH ROAD	16+60	18+65	5.15%	RIGHT	4:1/3:1	3	0.04	B6	106.95	0.4%	0.43	0.25	2.03	GRASS	

exceeds permissible velocities in ECM. revise and/or provide necessary protection

CHANNEL DEPTH AND SIDE SLOPES HAVE BEEN UPDATED TO REFLECT THE TYPICAL ROADWAY CROSS SECTIONS ON PAGES C1.2 & C1.3 OF CDs

the channel depth indicated in the roadway cross-section E is 1.75' and F is 8". revise accordingly.

DATA UPDATED. ANY CHANNEL WITH VELOCITY GREATER THAN 5 FT/S IS CALLED OUT WITH TRM PROTECTION

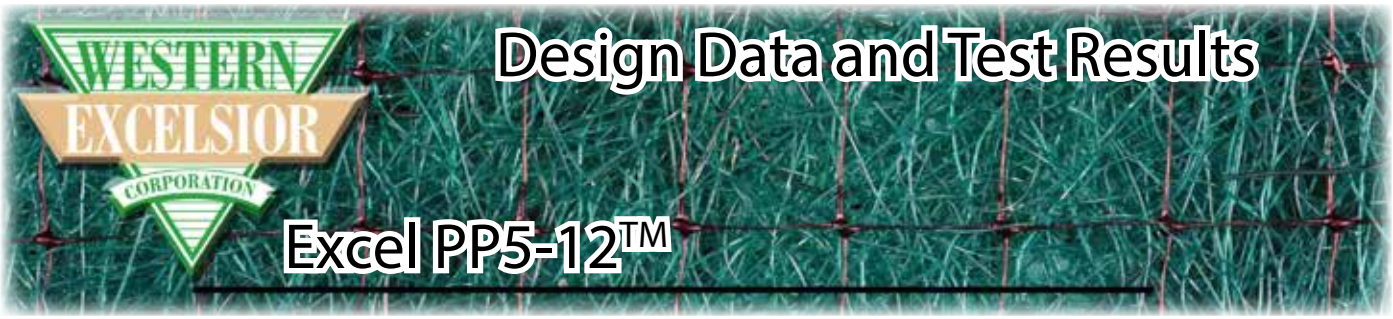

Specifications

A variety of test methods are utilized to determine performance and conformance values for Rolled Erosion Control Products (RECPs). Information within this document is presented to provide conformance values and recommended design values. Test results obtained for the Excel PP5-12 Turf Reinforcement Mat (TRM) and general design values are presented in Tables 1-4. For specific information detailing testing protocols, results and application of design values, refer to document number WE_EXCEL_PERF_GEN.

Table 1 - Bench Scale Testing / NTPEP

Test Method	Condition	Result
ASTM D7101 Bench Scale Rainfall and Rainsplash Test	2 in per hour	14.53
	4 in per hour	5.59
	6 in per hour	4.82
ASTM D7207 Bench Scale Shear Resistance Test	3.0 psf (145 PA)	0.5 in (12 mm)
ASTM D7322 Bench Scale Vegetation Establishment Test	Top Soil, Fescue, 21 Day Incubation	661 %
NTPEP Report Number	ECP-2016-03-008	

Table 3 - Recommended Design Values*

Design Value	Unvegetated	Vegetated
Typical RUSLE Cover Factor (C Factor)**	0.03	N/A
Maximum Slope Gradient (RUSLE)	1H : 1V	N/A
Max Allowable Velocity (0.5 in (12mm) soil loss)***	9.0 ft/s (2.7 m/s)	15.0 ft/s (4.6 m/s)
Max Allowable Shear Stress (0.5 in (12mm) soil loss)***	2.8 psf (134 PA)	12.0 psf (575 PA)
CF_{veg}/CF_{TRM}	N/A	0.26

C Factor value compliant with ASTM D6459. * Shear Stress and Velocity values compliant with ASTM D6460.

Table 2 - Texas Transportation Institute (TTI) Results

Class	Test Condition	Result
A	< 3H:1 Clay Slope Test	N/A
B	< 3H:1 Sand Slope Test	N/A
C	> 3H:1 Clay Slope Test	N/A
D	> 3H:1 Sand Slope Test	N/A
E	2 psf Partially Vegetated Channel Test	Approved
F	4 psf Partially Vegetated Channel Test	Approved
G	6 psf Partially Vegetated Channel Test	Approved
H	8 psf Partially Vegetated Channel Test	Approved

Table 4 - HEC-15 Resistance to Flow Values

Design Value	Unvegetated
Manning's n @ Tau lower (0.7 psf (34 PA))	0.027
Manning's n @ Tau mid (1.4 psf (67 PA))	0.027
Manning's n @ Tau upper (2.8 psf (134 PA))	0.027

*Recommended Design Values are based on results of standardized industry full-scale testing and may not be applicable for all field conditions. For most accurate computation of field performance, consult Excel Erosion Design (EED) at www.westernexcelsior.com.

Elbert Rd Roadside Ditch

Project Description

Friction Method	Manning Formula
Solve For	Normal Depth

Input Data

Channel Slope	0.020 ft/ft
Discharge	64.40 cfs

Section Definitions

Station (ft)	Elevation (ft)
0+00	88.75
0+05	86.30
0+15	86.30
0+20	88.75

Roughness Segment Definitions

Start Station	Ending Station	Roughness Coefficient
(0+00, 88.75)	(0+05, 86.30)	0.025
(0+05, 86.30)	(0+15, 86.30)	0.025
(0+15, 86.30)	(0+20, 88.75)	0.025

Options

Current Roughness Weighted Method	Pavlovskii's Method
Open Channel Weighting Method	Pavlovskii's Method
Closed Channel Weighting Method	Pavlovskii's Method

Results

Normal Depth	9.9 in
Roughness Coefficient	0.025
Elevation	87.13 ft
Elevation Range	86.3 to 88.8 ft
Flow Area	9.7 ft²
Wetted Perimeter	13.8 ft
Hydraulic Radius	8.4 in
Top Width	13.38 ft
Normal Depth	9.9 in
Critical Depth	12.1 in
Critical Slope	0.010 ft/ft
Velocity	6.65 ft/s
Velocity Head	0.69 ft
Specific Energy	1.52 ft
Froude Number	1.378

Elbert Rd Roadside Ditch

Results	
Flow Type	Supercritical

GVF Input Data	
Downstream Depth	0.0 in
Length	0.0 ft
Number Of Steps	0

GVF Output Data	
Upstream Depth	0.0 in
Profile Description	N/A
Profile Headloss	0.00 ft
Downstream Velocity	Infinity ft/s
Upstream Velocity	Infinity ft/s
Normal Depth	9.9 in
Critical Depth	12.1 in
Channel Slope	0.020 ft/ft
Critical Slope	0.010 ft/ft

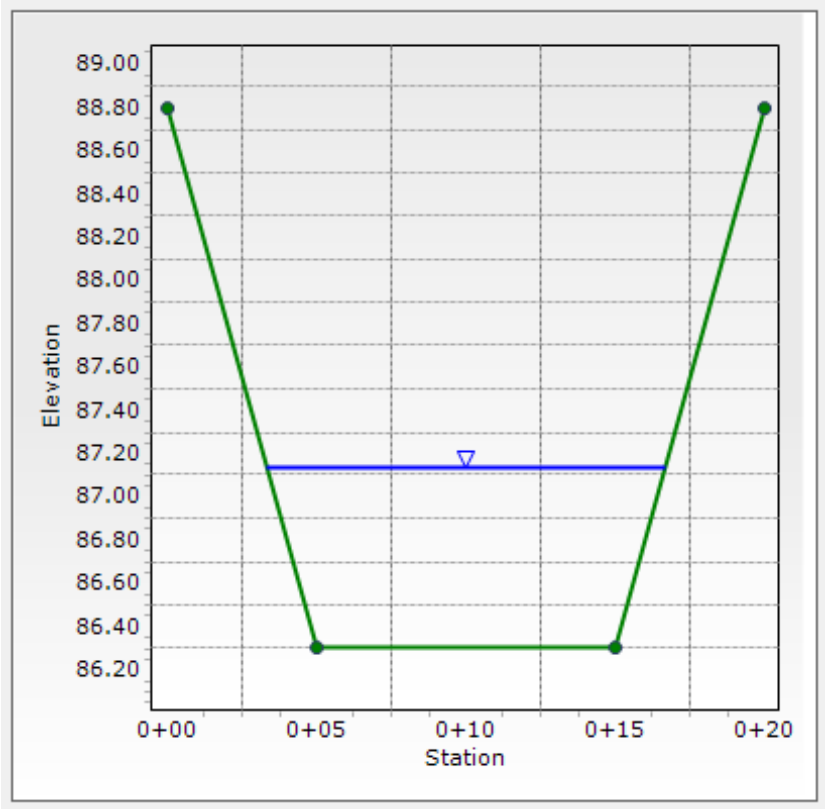

Rock Chute ID	Forebay ID	Rock Chute Location	Contributing Basins	Q100 Flow (cfs)	Upstream Inlet Apron Length (ft)	Drop (ft) *(Inlet Apron to Outlet Apron)*	Chute Length (ft)	Downstream Outlet Apron Length (ft)	Chute Width (ft)	D50 (in)	Rock Chute Thickness (in)	Rock Chute Depth* (ft)	Top Width (ft)
A2-W	A2-W	Pond A2	A2	18	10	3	16	7	10	6	12	2.0	26.0
A2-C	A2-C	Pond A2	A2	3	10	8	36	7	10	6	12	1.5	22.0
A2-E	A2-E	Pond A2	A2	18	10	9	40	7	10	6	12	1.5	22.0
B1-E	B1-E	Pond B1	B1	5	10	3.75	19	10	10	6	12	2.0	26.0
B8-W	B8-W	Pond B8	B6, B8	119	13	8	36	17	10	18	36	3.0	34.0
B8-E	B8-E	Pond B8	B8	23	10	9	36	8	10	6	12	2.0	26.0

NOTES:

*: Rock Chute Depth accounts for 0.5' of freeboard.

Rock Chute Design Data

(Version WI-July-2010, Based on Design of Rock Chutes by Robinson, Rice, Kadavy, ASAE, 1998)

Project: *Pond A2- East Chute* **County:** *El Paso County*
Designer: *KRK* **Checked by:** _____
Date: *April 30, 2024* **Date:** _____

Input Geometry:

Upstream Channel	Chute		Downstream Channel
Bw = *10.0* ft.	Bw = *10.0* ft.		Bw = *10.0* ft.
Side slopes = *4.0* (m:1)	Factor of safety = *1.20* (F_s)	***1.2 Min***	Side slopes = *1.5* (m:1)
Velocity n-value = *0.035*	Side slopes = *4.0* (m:1) →	***2.0:1 max.***	Velocity n-value = *0.035*
Bed slope = *0.0350* ft./ft.	Bed slope (4:1) = *0.250* ft./ft →	***3.0:1 max.***	Bed slope = *0.0070* ft./ft.
Note: n value = a) velocity n from waterway program or b) computed mannings n for channel	Freeboard = *0.5* ft. →		
	Outlet apron depth, d = *1.0* ft.		Base flow = *0.0* cfs

Design Storm Data (Table 2, FOTG, WI-NRCS Grade Stabilization Structure No. 410):

Apron elev. --- Inlet =*205.0* ft. ------- Outlet *195.0* ft. --- (H_{drop} = 9 ft.)

***Note**: The total required capacity is routed through the chute (principal spillway) or in combination with an auxiliary spillway.*

Q_{high} = Runoff from design storm capacity from Table 2, FOTG Standard 410
Q_5 = Runofff from a 5-year,24-hour storm.

***Input tailwater (Tw)**:* 0.25 1.20

Q_{high}= *17.7* cfs High flow storm through chute → Tw (ft.) = *Program*
Q_5 = *8.0* cfs Low flow storm through chute → Tw (ft.) = *Program*

Profile and Cross Section (Output):

Starting Station = *1+00*

Notes:
1) Output given as ***High Flow (Low Flow)*** values.
2) Tailwater depth plus d must be at or above the hydraulic jump height for the chute to function.
3) Critical depth occurs $2y_c$ - $4y_c$ upstream of crest.
4) Use WI Const. Spec. 13, Class I non-woven geotextile under rock.

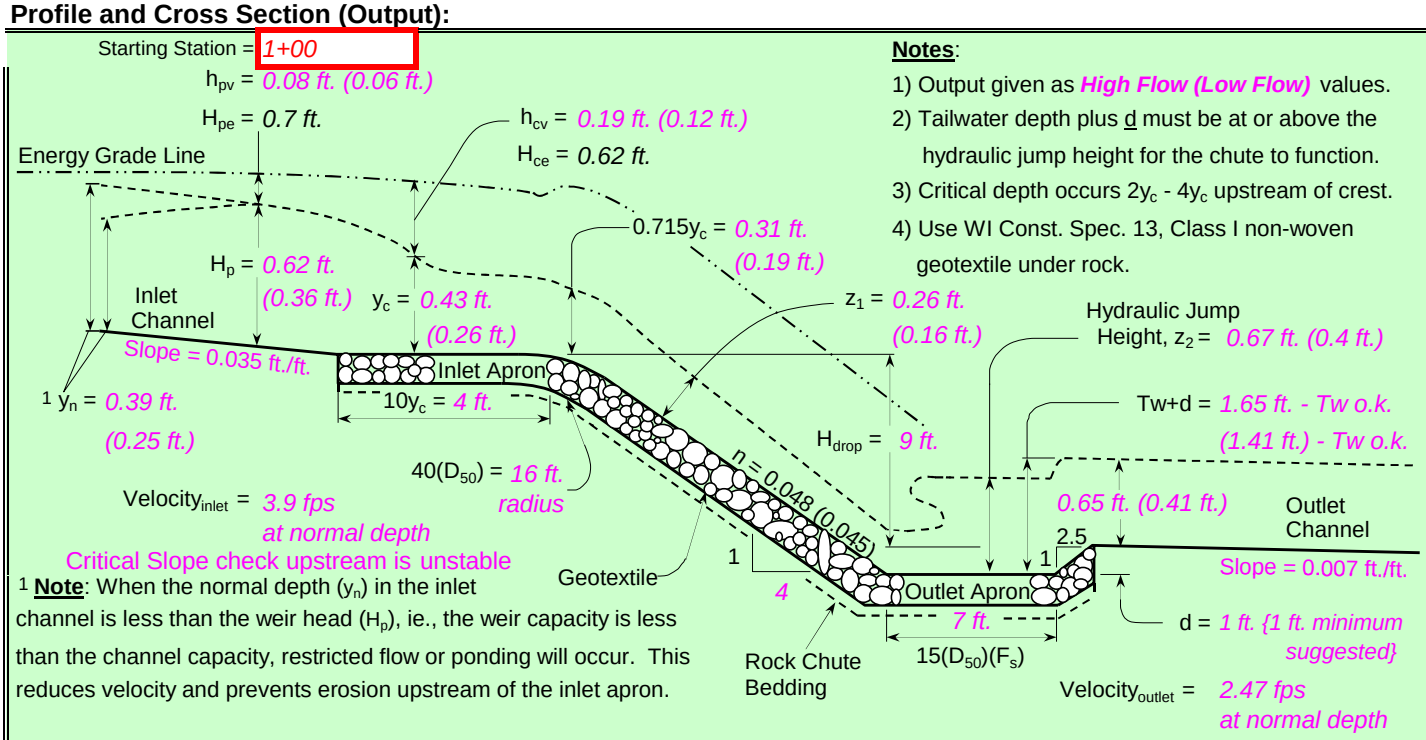

[1] **Note**: When the normal depth (y_n) in the inlet channel is less than the weir head (H_p), ie., the weir capacity is less than the channel capacity, restricted flow or ponding will occur. This reduces velocity and prevents erosion upstream of the inlet apron.

Profile Along Centerline of Chute

Typical Cross Section

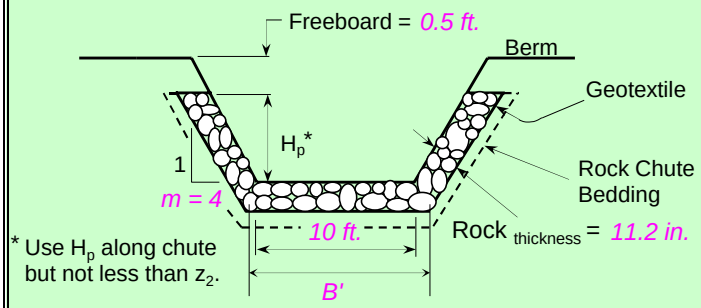

* Use H_p along chute but not less than z_2.

	1.61 cfs/ft.	Equivalent unit discharge
F_S =	*1.20*	Factor of safety (multiplier)
z_1 =	*0.26 ft.*	Normal depth in chute
n-value =	*0.048*	Manning's roughness coefficient
$D_{50}(F_s)$ =	*5.6 in.*	Minimum Design D50*
$2(D_{50})(F_s)$ =	*11.2 in.*	Rock chute thickness
Tw + d =	*1.65 ft.*	Tailwater above outlet apron
z_2 =	*0.67 ft.*	Hydraulic jump height
****** The outlet***	***will***	***function adequately***

High Flow Storm Information

Rock Chute Design Data

(Version WI-July-2010, Based on Design of Rock Chutes by Robinson, Rice, Kadavy, ASAE, 1998)

Project: *Pond A2- Center Chute* **County:** *El Paso County*
Designer: *KRK* **Checked by:**
Date: *April 30, 2024* **Date:**

Input Geometry:

Upstream Channel	Chute		Downstream Channel
Bw = 6.0 ft.	Bw = 6.0 ft.		Bw = 6.0 ft.
Side slopes = 4.0 (m:1)	Factor of safety = 1.20 (F_s)	1.2 Min	Side slopes = 1.5 (m:1)
Velocity n-value = 0.035	Side slopes = 4.0 (m:1) →	2.0:1 max.	Velocity n-value = 0.035
Bed slope = 0.0350 ft./ft.	Bed slope (4:1) = 0.250 ft./ft →	3.0:1 max.	Bed slope = 0.0070 ft./ft.
Note: n value = a) velocity n from waterway program or b) computed mannings n for channel	Freeboard = 0.5 ft. →		
	Outlet apron depth, d = 1.0 ft.		Base flow = 0.0 cfs

Design Storm Data (Table 2, FOTG, WI-NRCS Grade Stabilization Structure No. 410):

Apron elev. --- Inlet = 204.0 ft. ------- Outlet 195.0 ft. --- (H_{drop} = 8 ft.)

Q_{high} = Runoff from design storm capacity from Table 2, FOTG Standard 410
Q_5 = Runofff from a 5-year,24-hour storm.

Q_{high} = 2.7 cfs High flow storm through chute → Tw (ft.) = Program
Q_5 = 2.0 cfs Low flow storm through chute → Tw (ft.) = Program

***Note**: The total required capacity is routed through the chute (principal spillway) or in combination with an auxiliary spillway.*
***Input tailwater (Tw)**:* 0.25 1.20

Profile and Cross Section (Output):

Starting Station = 0+00

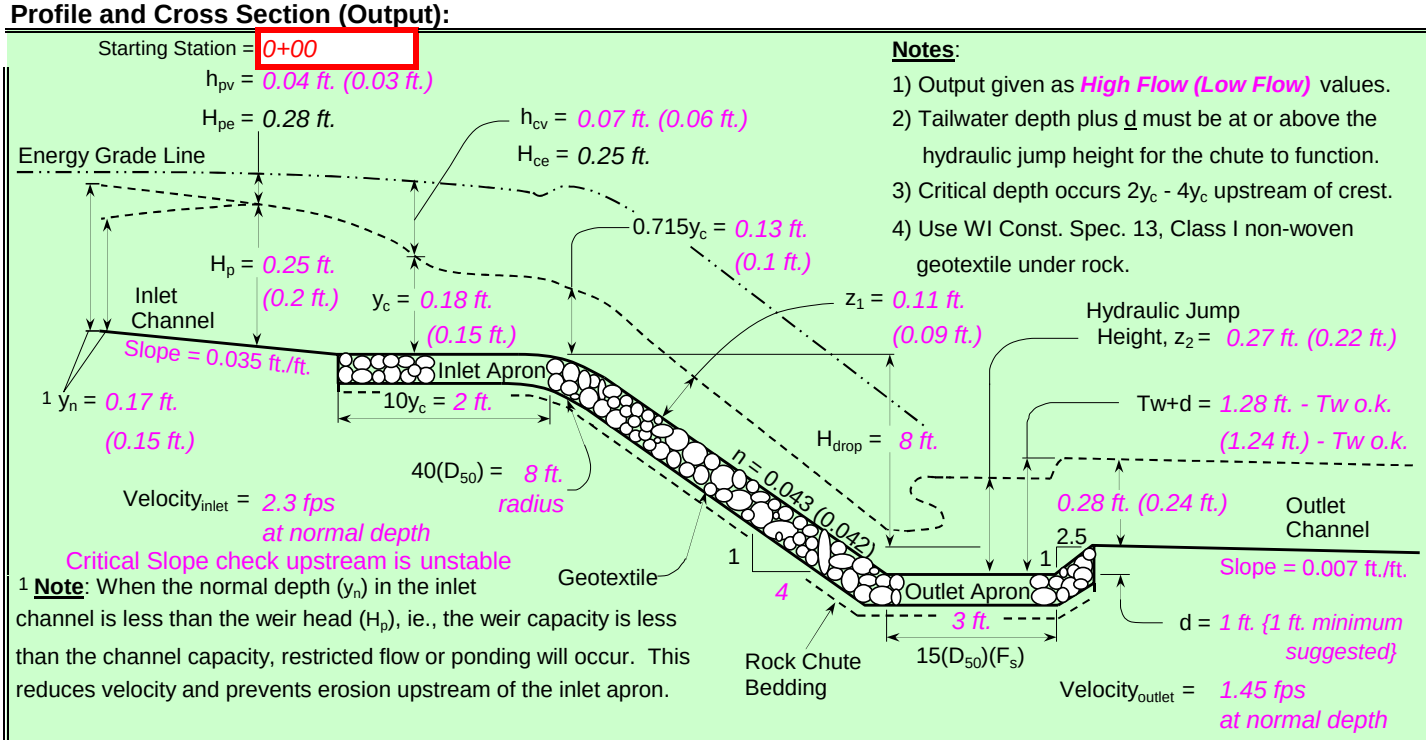

Notes:
1) Output given as ***High Flow (Low Flow)*** values.
2) Tailwater depth plus d must be at or above the hydraulic jump height for the chute to function.
3) Critical depth occurs $2y_c$ - $4y_c$ upstream of crest.
4) Use WI Const. Spec. 13, Class I non-woven geotextile under rock.

[1] **Note**: When the normal depth (y_n) in the inlet channel is less than the weir head (H_p), ie., the weir capacity is less than the channel capacity, restricted flow or ponding will occur. This reduces velocity and prevents erosion upstream of the inlet apron.

Profile Along Centerline of Chute

Typical Cross Section

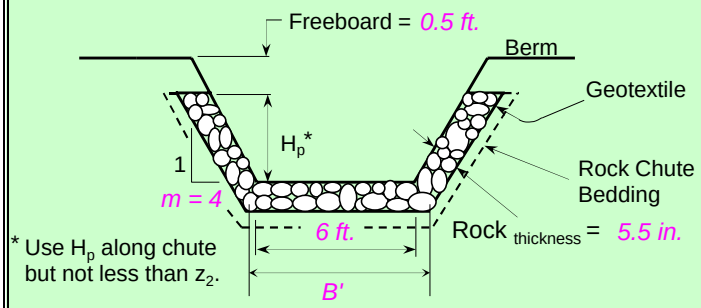

* Use H_p along chute but not less than z_2.

	0.42 cfs/ft.	Equivalent unit discharge
F_S =	1.20	Factor of safety (multiplier)
z_1 =	0.11 ft.	Normal depth in chute
n-value =	0.043	Manning's roughness coefficient
$D_{50}(F_s)$ =	2.7 in.	Minimum Design D50*
$2(D_{50})(F_s)$ =	5.5 in.	Rock chute thickness
Tw + d =	1.28 ft.	Tailwater above outlet apron
z_2 =	0.27 ft.	Hydraulic jump height
****** The outlet***	***will***	***function adequately***

High Flow Storm Information

Rock Chute Design Data

(Version WI-July-2010, Based on Design of Rock Chutes by Robinson, Rice, Kadavy, ASAE, 1998)

Project: *Pond A2- West Chute* **County:** *El Paso County*
Designer: *KRK* **Checked by:** _____
Date: *April 30, 2024* **Date:** _____

Input Geometry:

Upstream Channel	Chute		Downstream Channel
Bw = *10.0* ft.	Bw = *10.0* ft.		Bw = *10.0* ft.
Side slopes = *4.0* (m:1)	Factor of safety = *1.20* (F_s)	***1.2 Min***	Side slopes = *1.5* (m:1)
Velocity n-value = *0.035*	Side slopes = *4.0* (m:1) →	***2.0:1 max.***	Velocity n-value = *0.035*
Bed slope = *0.0350* ft./ft.	Bed slope (4:1) = *0.250* ft./ft →	***3.0:1 max.***	Bed slope = *0.0070* ft./ft.
Note: n value = a) velocity n from waterway program or b) computed mannings n for channel	Freeboard = *0.5* ft. →		
	Outlet apron depth, d = *1.0* ft.		Base flow = *0.0* cfs

Design Storm Data (Table 2, FOTG, WI-NRCS Grade Stabilization Structure No. 410):

Apron elev. --- Inlet =*199.0* ft. ------- Outlet *195.0* ft. --- (H_{drop} = 3 ft.)

Q_{high} = Runoff from design storm capacity from Table 2, FOTG Standard 410
Q_5 = Runofff from a 5-year,24-hour storm.

Q_{high}= *17.9* cfs High flow storm through chute → Tw (ft.) = *Program*
Q_5 = *7.3* cfs Low flow storm through chute → Tw (ft.) = *Program*

***Note**: The total required capacity is routed through the chute (principal spillway) or in combination with an auxiliary spillway.*
***Input tailwater (Tw)**:* 0.25 1.20

Profile and Cross Section (Output):

Starting Station = 0+00

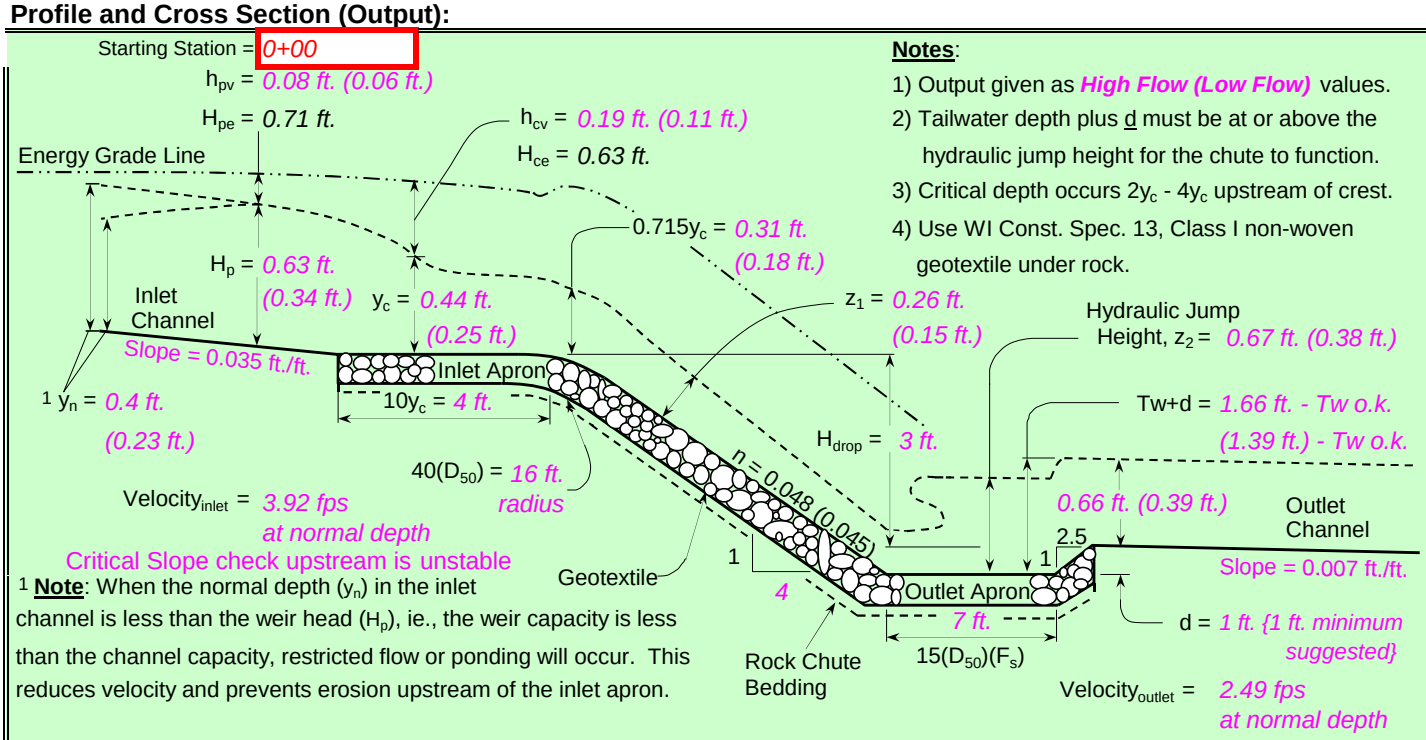

Notes:
1) Output given as ***High Flow (Low Flow)*** values.
2) Tailwater depth plus d must be at or above the hydraulic jump height for the chute to function.
3) Critical depth occurs $2y_c$ - $4y_c$ upstream of crest.
4) Use WI Const. Spec. 13, Class I non-woven geotextile under rock.

[1] **Note**: When the normal depth (y_n) in the inlet channel is less than the weir head (H_p), ie., the weir capacity is less than the channel capacity, restricted flow or ponding will occur. This reduces velocity and prevents erosion upstream of the inlet apron.

Profile Along Centerline of Chute

Typical Cross Section

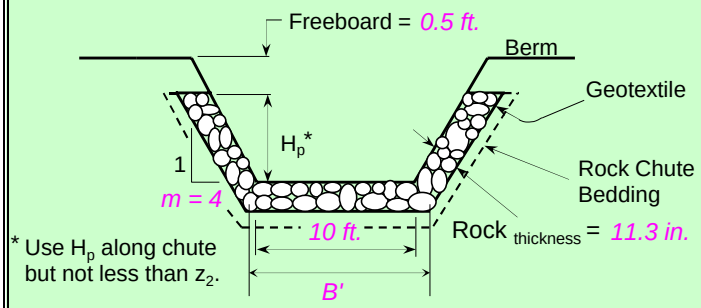

* Use H_p along chute but not less than z_2.

	1.64 cfs/ft.	Equivalent unit discharge
F_S =	*1.20*	Factor of safety (multiplier)
z_1 =	*0.26 ft.*	Normal depth in chute
n-value =	*0.048*	Manning's roughness coefficient
$D_{50}(F_s)$ =	*5.6 in.*	Minimum Design D50*
$2(D_{50})(F_s)$ =	*11.3 in.*	Rock chute thickness
Tw + d =	*1.66 ft.*	Tailwater above outlet apron
z_2 =	*0.67 ft.*	Hydraulic jump height
****** The outlet***	***will***	***function adequately***

High Flow Storm Information

Rock Chute Design Data

(Version WI-July-2010, Based on Design of Rock Chutes by Robinson, Rice, Kadavy, ASAE, 1998)

Project: *Pond B1- East Chute* **County:** *El Paso County*
Designer: *KRK* **Checked by:** _____
Date: *April 30, 2024* **Date:** _____

Input Geometry:

Upstream Channel	Chute		Downstream Channel
Bw = *10.0* ft.	Bw = *10.0* ft.		Bw = *10.0* ft.
Side slopes = *4.0* (m:1)	Factor of safety = *1.20* (F_s)	*1.2 Min*	Side slopes = *1.5* (m:1)
Velocity n-value = *0.035*	Side slopes = *4.0* (m:1) →	*2.0:1 max.*	Velocity n-value = *0.035*
Bed slope = *0.0350* ft./ft.	Bed slope (4:1) = *0.250* ft./ft →	*3.0:1 max.*	Bed slope = *0.0070* ft./ft.
Note: n value = a) velocity n from waterway program or b) computed mannings n for channel	Freeboard = *0.5* ft. →		
	Outlet apron depth, d = *1.0* ft.		Base flow = *0.0* cfs

Design Storm Data (Table 2, FOTG, WI-NRCS Grade Stabilization Structure No. 410):

Apron elev. --- Inlet = *199.0* ft. ------- Outlet *194.3* ft. --- (H_{drop} = 3.8 ft.)

Q_{high} = Runoff from design storm capacity from Table 2, FOTG Standard 410
Q_5 = Runofff from a 5-year,24-hour storm.

Q_{high} = *5.1* cfs High flow storm through chute → Tw (ft.) = *Program*
Q_5 = *2.0* cfs Low flow storm through chute → Tw (ft.) = *Program*

***Note**: The total required capacity is routed through the chute (principal spillway) or in combination with an auxiliary spillway.*
***Input tailwater (Tw)**:* 0.25 1.20

Profile and Cross Section (Output):

Starting Station = 0+00

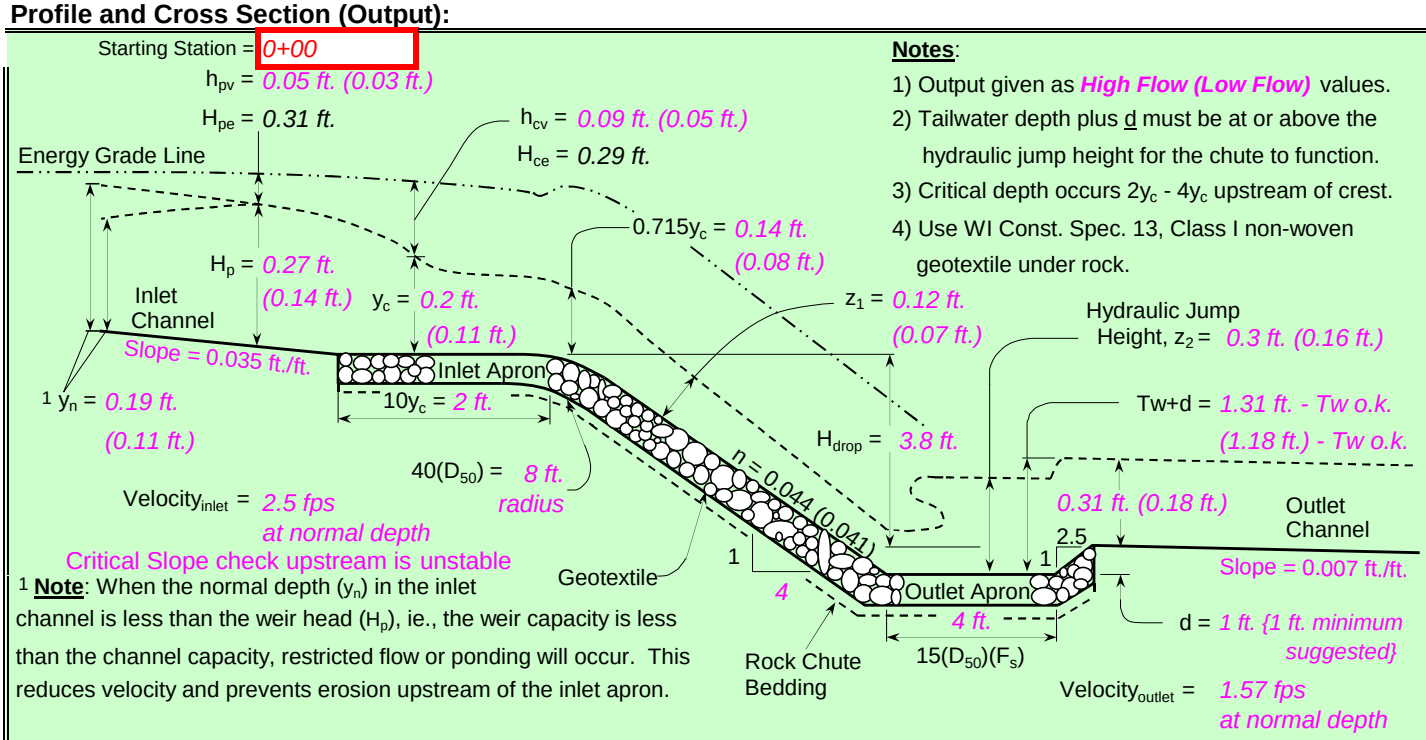

Notes:
1) Output given as ***High Flow (Low Flow)*** values.
2) Tailwater depth plus d must be at or above the hydraulic jump height for the chute to function.
3) Critical depth occurs $2y_c$ - $4y_c$ upstream of crest.
4) Use WI Const. Spec. 13, Class I non-woven geotextile under rock.

[1] **Note**: When the normal depth (y_n) in the inlet channel is less than the weir head (H_p), ie., the weir capacity is less than the channel capacity, restricted flow or ponding will occur. This reduces velocity and prevents erosion upstream of the inlet apron.

Profile Along Centerline of Chute

Typical Cross Section

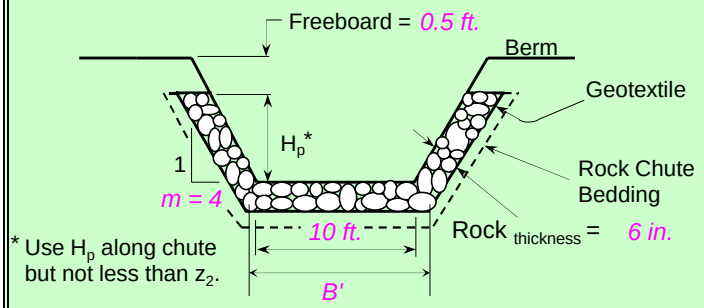

* Use H_p along chute but not less than z_2.

	0.49 cfs/ft.	Equivalent unit discharge
F_S =	*1.20*	Factor of safety (multiplier)
z_1 =	*0.12 ft.*	Normal depth in chute
n-value =	*0.044*	Manning's roughness coefficient
$D_{50}(F_s)$ =	*3 in.*	Minimum Design D50*
$2(D_{50})(F_s)$ =	*6 in.*	Rock chute thickness
Tw + d =	*1.31 ft.*	Tailwater above outlet apron
z_2 =	*0.3 ft.*	Hydraulic jump height
****** The outlet***	***will***	***function adequately***

High Flow Storm Information

Rock Chute Design Data

(Version WI-July-2010, Based on Design of Rock Chutes by Robinson, Rice, Kadavy, ASAE, 1998)

Project: *Pond B8- East Chute* **County:** *El Paso County*
Designer: *KRK* **Checked by:**
Date: *April 30, 2024* **Date:**

Input Geometry:

Upstream Channel	Chute		Downstream Channel
Bw = *10.0* ft.	Bw = *10.0* ft.		Bw = *10.0* ft.
Side slopes = *4.0* (m:1)	Factor of safety = *1.20* (F_s)	***1.2 Min***	Side slopes = *1.5* (m:1)
Velocity n-value = *0.035*	Side slopes = *4.0* (m:1) →	***2.0:1 max.***	Velocity n-value = *0.035*
Bed slope = *0.0750* ft./ft.	Bed slope (4:1) = *0.250* ft./ft →	***3.0:1 max.***	Bed slope = *0.0070* ft./ft.
Note: n value = a) velocity n from waterway program or b) computed mannings n for channel	Freeboard = *0.5* ft. →		
	Outlet apron depth, d = *1.0* ft.		Base flow = *0.0* cfs

Design Storm Data (Table 2, FOTG, WI-NRCS Grade Stabilization Structure No. 410):

Apron elev. --- Inlet =*197.0* ft. ------- Outlet *188.0* ft. --- (H_{drop} = 8 ft.)

Q_{high} = Runoff from design storm capacity from Table 2, FOTG Standard 410
Q_5 = Runofff from a 5-year,24-hour storm.

Q_{high}= *23.1* cfs High flow storm through chute → Tw (ft.) = *Program*
Q_5 = *4.2* cfs Low flow storm through chute → Tw (ft.) = *Program*

***Note**: The total required capacity is routed through the chute (principal spillway) or in combination with an auxiliary spillway.*
***Input tailwater (Tw)**:* 0.25 1.20

Profile and Cross Section (Output):

Starting Station = *0+00*

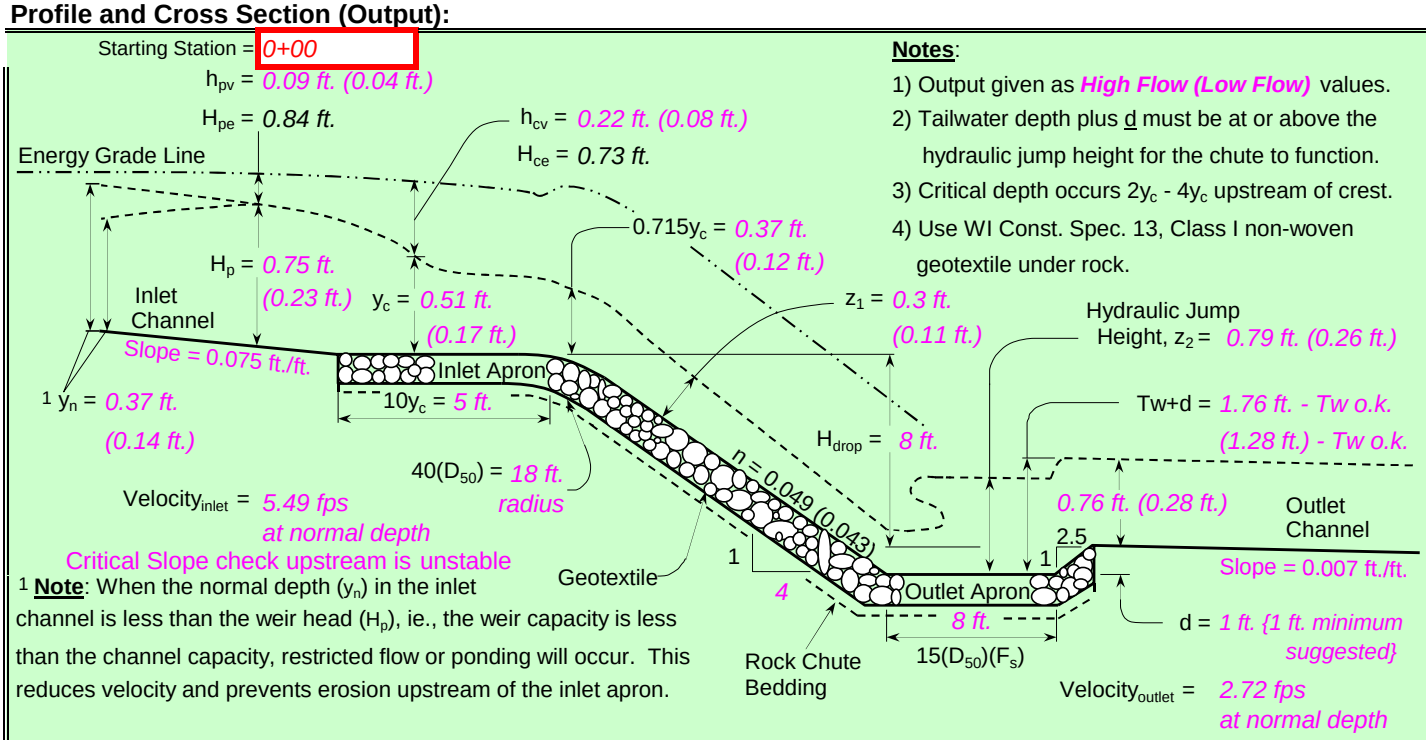

Notes:
1) Output given as ***High Flow (Low Flow)*** values.
2) Tailwater depth plus d must be at or above the hydraulic jump height for the chute to function.
3) Critical depth occurs $2y_c$ - $4y_c$ upstream of crest.
4) Use WI Const. Spec. 13, Class I non-woven geotextile under rock.

[1] **Note**: When the normal depth (y_n) in the inlet channel is less than the weir head (H_p), ie., the weir capacity is less than the channel capacity, restricted flow or ponding will occur. This reduces velocity and prevents erosion upstream of the inlet apron.

Profile Along Centerline of Chute

Typical Cross Section

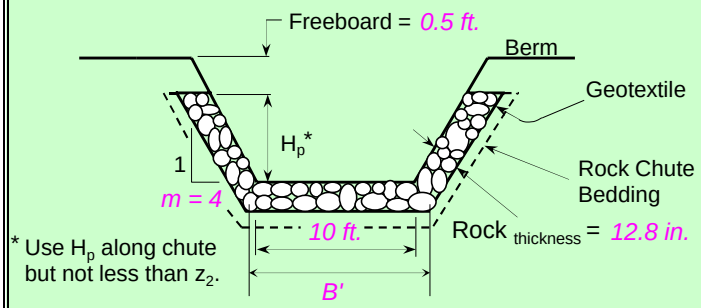

* Use H_p along chute but not less than z_2.

	2.07 cfs/ft.	Equivalent unit discharge
F_S =	*1.20*	Factor of safety (multiplier)
z_1 =	*0.3 ft.*	Normal depth in chute
n-value =	*0.049*	Manning's roughness coefficient
$D_{50}(F_s)$ =	*6.4 in.*	Minimum Design D50*
$2(D_{50})(F_s)$ =	*12.8 in.*	Rock chute thickness
Tw + d =	*1.76 ft.*	Tailwater above outlet apron
z_2 =	*0.79 ft.*	Hydraulic jump height
****** The outlet***	***will***	***function adequately***

High Flow Storm Information

Rock Chute Design Data

(Version WI-July-2010, Based on Design of Rock Chutes by Robinson, Rice, Kadavy, ASAE, 1998)

Project: *Pond B8- West Chute* **County:** *El Paso County*
Designer: *KRK* **Checked by:**
Date: *April 30, 2024* **Date:**

Input Geometry:

Upstream Channel	Chute		Downstream Channel
Bw = *10.0* ft.	Bw = *10.0* ft.		Bw = *10.0* ft.
Side slopes = *4.0* (m:1)	Factor of safety = *1.20* (F_s)	*1.2 Min*	Side slopes = *1.5* (m:1)
Velocity n-value = *0.035*	Side slopes = *4.0* (m:1) →	*2.0:1 max.*	Velocity n-value = *0.035*
Bed slope = *0.0540* ft./ft.	Bed slope (4:1) = *0.250* ft./ft →	*3.0:1 max.*	Bed slope = *0.0070* ft./ft.
Note: n value = a) velocity n from waterway program	Freeboard = *0.5* ft. →		
or b) computed mannings n for channel	Outlet apron depth, d = *1.0* ft.		Base flow = *0.0* cfs

Design Storm Data (Table 2, FOTG, WI-NRCS Grade Stabilization Structure No. 410):

Apron elev. --- Inlet = *197.0* ft. ------- Outlet *188.0* ft. --- (H_{drop} = 8 ft.)

Q_{high} = Runoff from design storm capacity from Table 2, FOTG Standard 410
Q_5 = Runofff from a 5-year,24-hour storm.

Q_{high} = *119.0* cfs High flow storm through chute → Tw (ft.) = *Program*
Q_5 = *22.6* cfs Low flow storm through chute → Tw (ft.) = *Program*

***Note**: The total required capacity is routed through the chute (principal spillway) or in combination with an auxiliary spillway.*
***Input tailwater (Tw)**:* 0.25 1.20

Profile and Cross Section (Output):

Starting Station = *0+00*

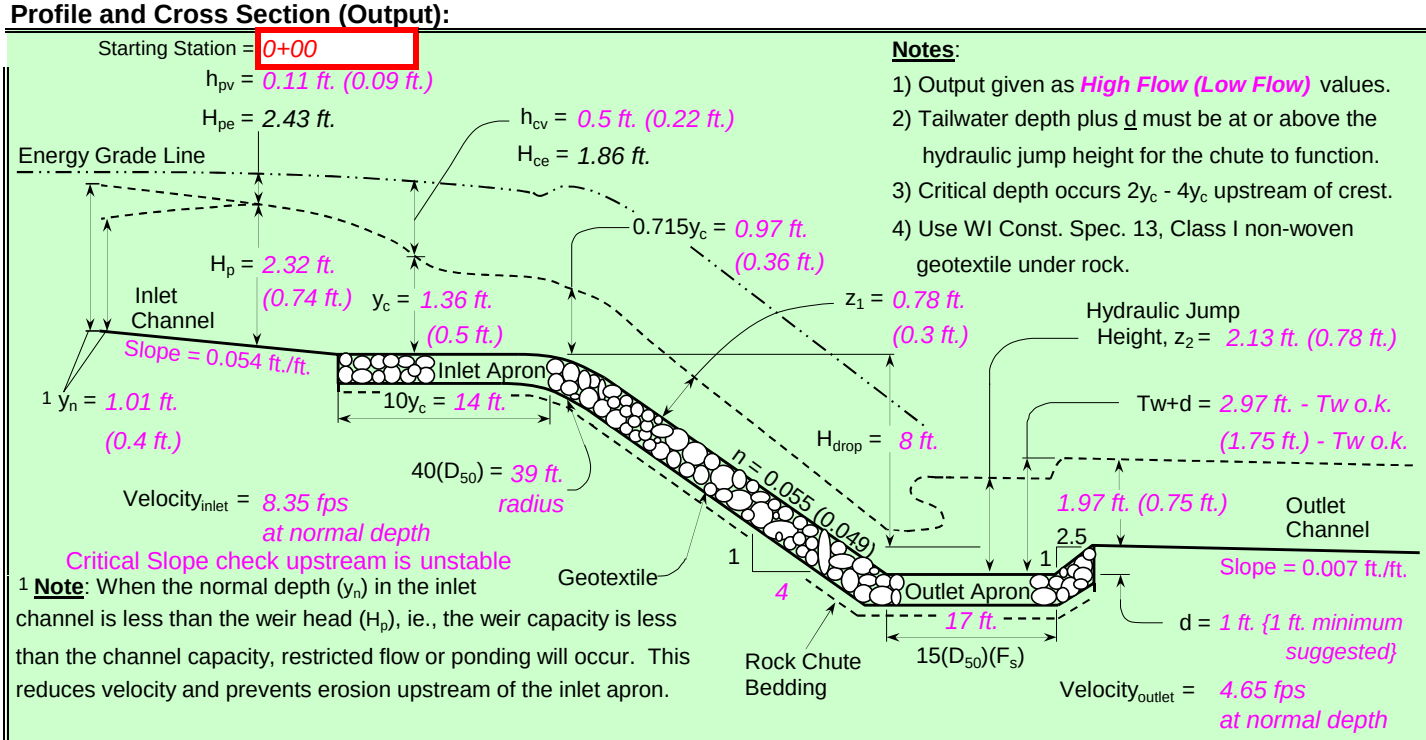

Notes:
1) Output given as ***High Flow (Low Flow)*** values.
2) Tailwater depth plus d must be at or above the hydraulic jump height for the chute to function.
3) Critical depth occurs $2y_c$ - $4y_c$ upstream of crest.
4) Use WI Const. Spec. 13, Class I non-woven geotextile under rock.

[1] **Note**: When the normal depth (y_n) in the inlet channel is less than the weir head (H_p), ie., the weir capacity is less than the channel capacity, restricted flow or ponding will occur. This reduces velocity and prevents erosion upstream of the inlet apron.

Profile Along Centerline of Chute

Typical Cross Section

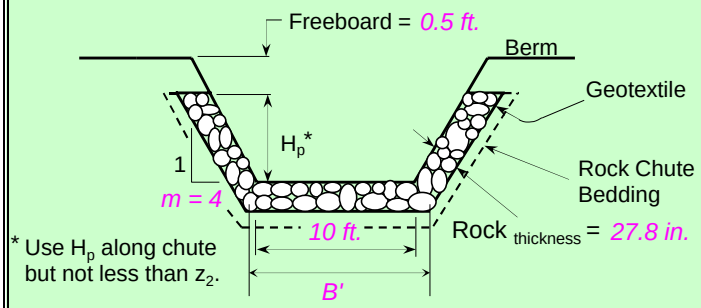

* Use H_p along chute but not less than z_2.

	8.97 cfs/ft.	Equivalent unit discharge
F_S =	*1.20*	Factor of safety (multiplier)
z_1 =	*0.78 ft.*	Normal depth in chute
n-value =	*0.055*	Manning's roughness coefficient
$D_{50}(F_s)$ =	*13.9 in.*	Minimum Design D50*
$2(D_{50})(F_s)$ =	*27.8 in.*	Rock chute thickness
Tw + d =	*2.97 ft.*	Tailwater above outlet apron
z_2 =	*2.13 ft.*	Hydraulic jump height
****** The outlet***	***will***	***function adequately***

High Flow Storm Information

APPENDIX E: EL PASO COUNTY DRAINAGE BASIN MAP

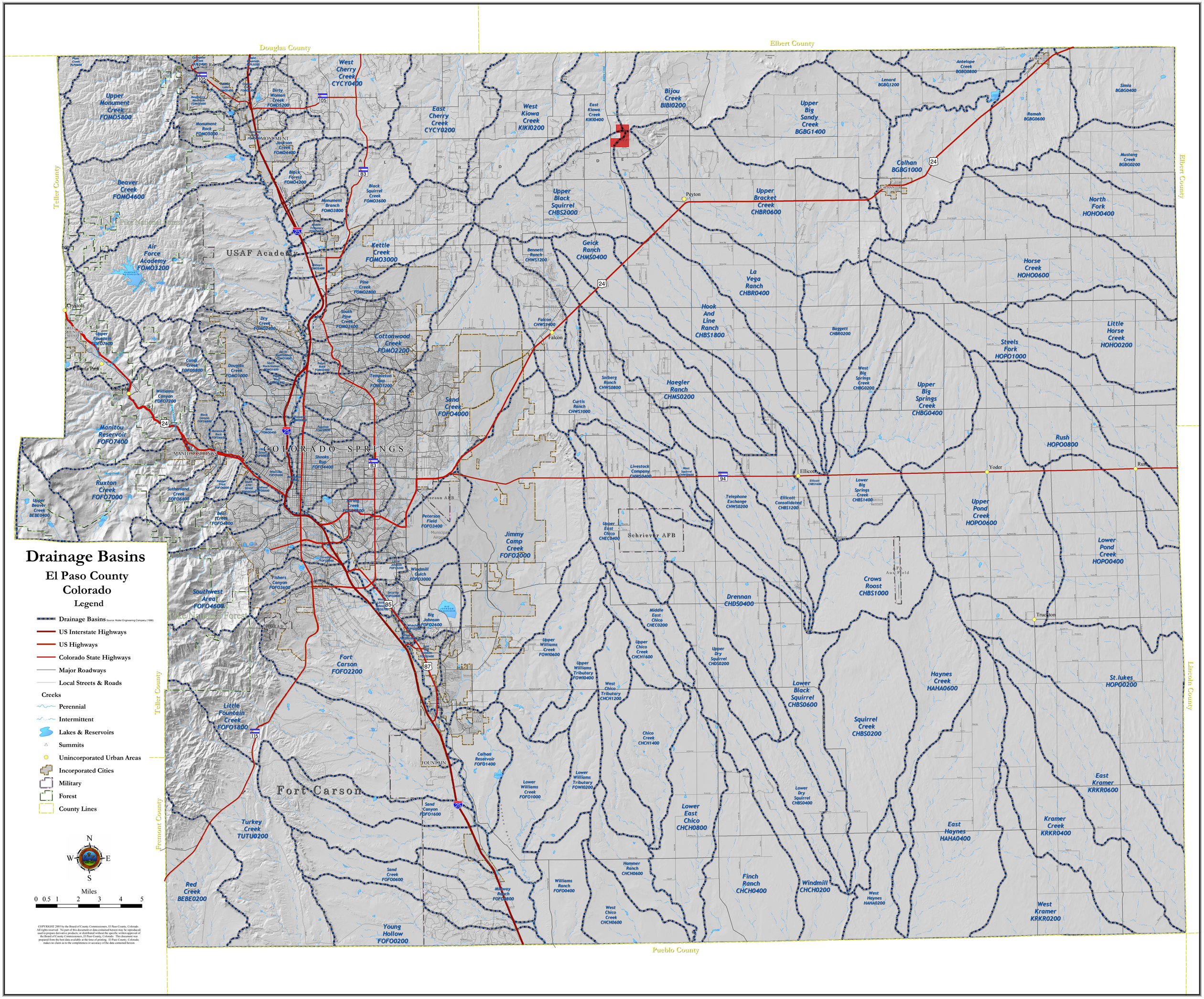
Douglas County
Elbert County
Teller County
Lincoln County
Pueblo County
Fremont County
Pike National Forest
USAF Academy
COLORADO SPRINGS
Fort Carson
Schriever AFB
Peterson AFB
Peyton
Falcon
Calhan
Ellicott
Yoder
Rush
Truckton
Cascade
Manitou Springs
Cripple Creek
Upper Monument Creek FOMO5800
Beaver Creek FOMO4600
Air Force Academy FOMO3200
Kettle Creek FOMO3000
Cottonwood Creek FOMO2200
West Cherry Creek CYCY0400
East Cherry Creek CYCY0200
West Kiowa Creek KIKI0200
East Kiowa Creek KIKI0400
Bijou Creek BIBI0200
Upper Big Sandy Creek BGBG1400
Calhan BGBG1000
Upper Black Squirrel CHBS2000
Geick Ranch CHMS0400
Upper Bracket Creek CHBR0600
La Vega Ranch CHBR0400
Hook And Line Ranch CHBS1800
Haegler Ranch CHMS0200
Upper Big Springs Creek CHBG0400
Steels Fork HOPO1000
Little Horse Creek HOHO0200
Horse Creek HOHO0600
North Fork HOHO0400
Rush HOPO0800
Upper Pond Creek HOPO0600
Lower Pond Creek HOPO0400
Crows Roost CHBS1000
Drennan CHDS0400
Lower Black Squirrel CHBS0600
Squirrel Creek CHBS0200
Haynes Creek HAHA0600
St.lukes HOPO0200
East Kramer KRKR0600
Kramer Creek KRKR0400
West Kramer KRKR0200
East Haynes HAHA0400
Finch Ranch CHCH0400
Windmill CHCH0200
Lower East Chico CHCH0800
Chico Creek CHCH1400
Upper Chico Creek CHCH1600
Upper Dry Squirrel CHDS0200
Lower Dry Squirrel CHDS0400
Jimmy Camp Creek FOFO2000
Sand Creek FOFO4000
Ruxton Creek FOFO7000
Manitou Reservoir FOFO7400
Southwest Area FOFO4600
Fort Carson FOFO2200
Little Fountain Creek FOFO1800
Turkey Creek TUTU0200
Red Creek BEBE0200
Young Hollow FOFO0200
Sand Creek FOFO0600
Drainage Basins
El Paso County
Colorado
Legend
Drainage Basins Source: Muller Engineering Company (1988)
US Interstate Highways
US Highways
Colorado State Highways
Major Roadways
Local Streets & Roads
Creeks
Perennial
Intermittent
Lakes & Reservoirs
Summits
Unincorporated Urban Areas
Incorporated Cities
Military
Forest
County Lines
N
W
E
S
Miles
0 0.5 1 2 3 4 5
COPYRIGHT 2005 by the Board of County Commissioners, El Paso County, Colorado. All rights reserved. No part of this document or data contained hereon may be reproduced; used to prepare derivative products; or distributed without the specific written approval of the Board of County Commissioners, El Paso County, Colorado. This document was prepared from the best data available at the time of printing. El Paso County, Colorado, makes no claim as to the completeness or accuracy of the data contained hereon.

APPENDIX F: APEX RANCH DRAINAGE REPORT

Design Procedure Form: Extended Detention Basin (EDB) - Sedimentation Facility

Designer:	QUENTIN ARMIJO
Company:	TERRA NOVA ENG.
Date:	April 2, 2008
Project:	APEX RANCH ESTATES
Location:	PEYTON, CO

1. Basin Storage Volume			
A) Tributary Area's Imperviousness Ratio ($i = I_a / 100$)	I_a =	10.00	%
	i =	0.10	
B) Contributing Watershed Area (Area)	Area =	76.80	acres
C) Water Quality Capture Volume (WQCV) ($WQCV = 1.0 * (0.91 * I^3 - 1.19 * I^2 + 0.78 * I)$)	WQCV =	0.07	watershed inches
D) Design Volume: Vol = (WQCV / 12) * Area * 1.2	Vol =	0.515	acre-feet
2. Outlet Works			
A) Outlet Type (Check One)	X	Orifice Plate	
		Perforated Riser Pipe	
		Other:	
B) Depth at Outlet Above Lowest Perforation (H)	H =	2.50	feet
C) Required Maximum Outlet Area per Row, (A_o)	A_o =	0.81	square inches
D) Perforation Dimensions **(enter one only)**:			
i) Circular Perforation Diameter **OR**	D =	1.0000	inches, **OR**
ii) 2" Height Rectangular Perforation Width	W =		inches
E) Number of Columns (nc, See Table 6a-1 For Maximum)	nc =	1	number
F) Actual Design Outlet Area per Row (A_o)	A_o =	0.79	square inches
G) Number of Rows (nr)	nr =	8	number
H) Total Outlet Area (A_{ot})	A_{ot} =	5.89	square inches
3. Trash Rack			
A) Needed Open Area: A_t = 0.5 * (Figure 7 Value) * A_{ot}	A_t =	200	square inches
B) Type of Outlet Opening (Check One)	X	≤ 2" Diameter **Round**	
		2" High **Rectangular**	
		Other:	
C) For 2", or Smaller, **Round Opening** (Ref.: Figure 6a):			
i) Width of Trash Rack and Concrete Opening (W_{conc}) from Table 6a-1	W_{conc} =	9	inches
ii) Height of Trash Rack Screen (H_{TR})	H_{TR} =	54	inches

APEX RANCH ESTATES
EL PASO COUNTY, COLORADO
FINAL DRAINAGE MAP
AUGUST 2008

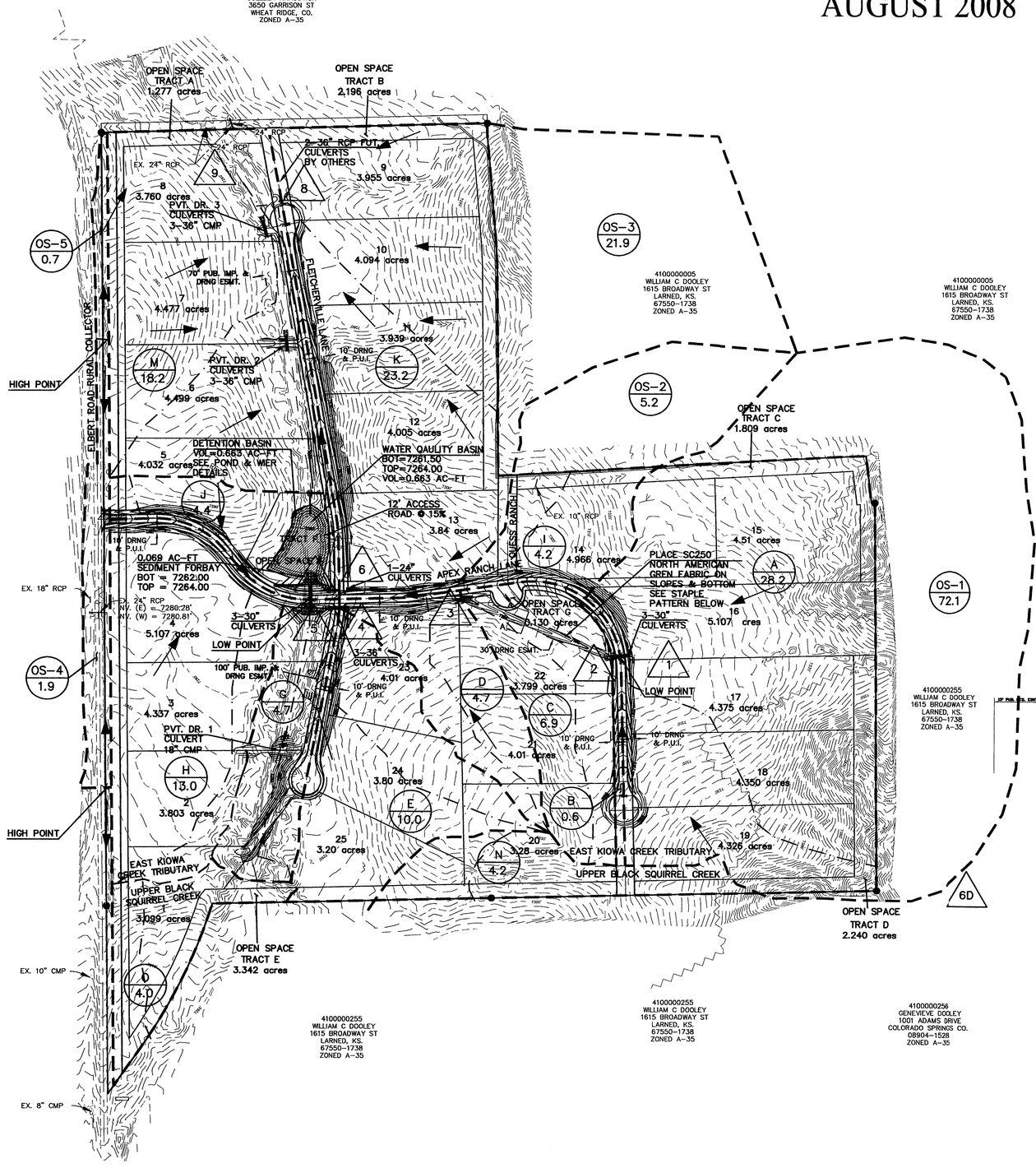

DEVELOPED CONDITIONS

BASIN	ACRES	Q5 CFS	Q100 CFS
OS-1	72.1	45	102
OS-2	5.2	4	9
OS-3	21.9	13	29
OS-4	1.9	4	8
OS-5	0.7	1	3
A	28.2	29	64
B	0.6	2	3
C	6.9	6	12
D	4.7	4	9
E	10.0	8	18
G	4.7	5	10
H	13.0	10	22
I	4.2	4	8
J	4.4	5	11
K	23.2	22	50
M	18.2	15	33
N	4.2	5	10
O	4.0	4	9

DESIGN POINT SUMMARY

DP	CONTRIBUTING BASINS	Q5 CFS	Q100 CFS
1	OS-1 & A	58	130
2	DP-1 & B	59	131
3	DP-2 & C	61	134
4	DP-3, D & E	68	148
5	DP-4, G & H	78	170
6	OS-2 & I	8	18
7	DP-5, DP-6, J & OS-4	87	188
8	OS-3 & K	29	64
9	DP-8, L, M, OS-5 & POND RELEASE	102	227
10	N & O	8	19

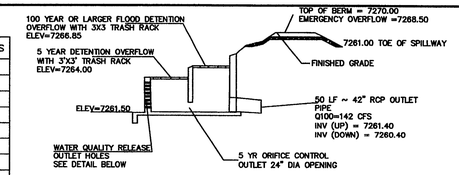

POND 2 OUTLET DETAIL
SEE ALSO FIG. 2-A DROP BOX OUTLET OPTION IN EL PASO COUNTY DCM VOLUME 2

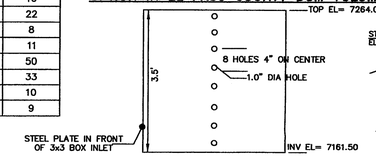

POND PERFORATED HOLE PATTERN

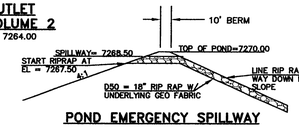

POND EMERGENCY SPILLWAY

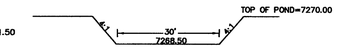

POND OVERFLOW WEIR DETAIL

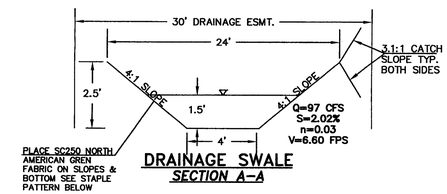

DRAINAGE SWALE
SECTION A-A

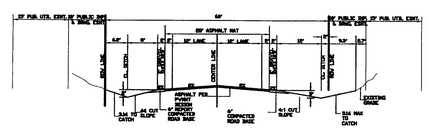

TYPICAL STREET SECTION APEX RANCH LANE
STA. 1+00.00 TO 8+00
NOT TO SCALE

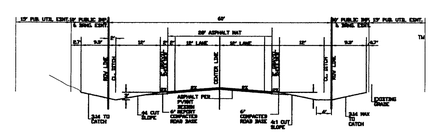

TYPICAL STREET SECTION APEX RANCH ROAD
STA. 8+00 TO 14+30
NOT TO SCALE

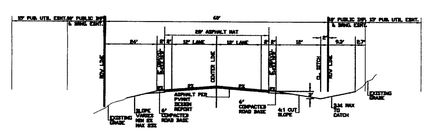

TYPICAL STREET SECTION APEX RANCH ROAD
STA. 14+30 TO 18+71
NOT TO SCALE

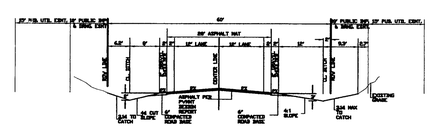

TYPICAL STREET SECTION APEX RANCH ROAD
STA. 18+71 TO 24+90
NOT TO SCALE

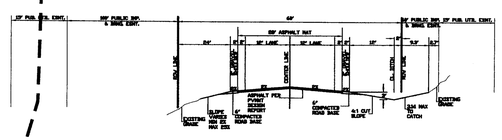

TYPICAL STREET SECTION FLETCHERVILLE LANE
STA. 2+57.48 TO 7+65.83
NOT TO SCALE

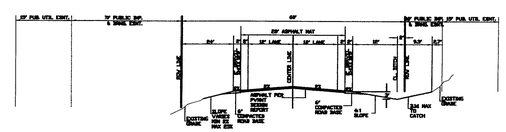

TYPICAL STREET SECTION FLETCHERVILLE LANE
STA. 7+65.83 TO 20+00

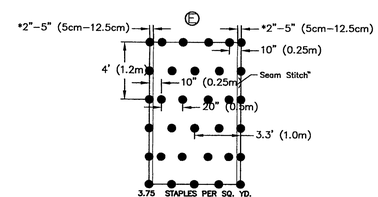

3.75 STAPLES PER SQ. YD.
(4.5 STAPLES PER SQ. M)
For blankets with the optional North American Green DOT System place staples/stakes through each of the YELLOW colored dots.

STAPLE PATTERN E
FOR SC250 FABRIC

N

200' 0 200' 400'

SCALE: 1"=200'

LEGEND

EXISTING 10' CONTOUR	4730
EXISTING 2' CONTOUR	4719
PROPOSED 10' CONTOUR	4720
PROPOSED 2' CONTOUR	4719
PROPOSED CULVERT	
DIRECTION OF FLOW	
BASIN BOUNDARY	
TIME OF CONCENTRATION	
BASIN ID	X-XX
ACRES	X.X
DESIGN POINT	3
DETENTION AREA	

NO.	REVISIONS DESCRIPTION	DATE
1.	REVISED PER COUNTY COMMENTS	11/3/07

UNTIL SUCH TIME AS THESE DRAWINGS ARE APPROVED BY THE APPROPRIATE REVIEWING AGENCIES, TERRA NOVA ENGINEERING, INC. APPROVES THEIR USE ONLY FOR THE PURPOSES DESIGNATED BY WRITTEN AUTHORIZATION.

PREPARED FOR:
APEX RANCH ESTATES, LLC
ATTN: CRAIG MCCONNELL
P.O. BOX 267
PEYTON, COLORADO 80831

Terra Nova Engineering, Inc.
Creative Civil Engineering Solutions
125 N. WAHSATCH AVE., SUITE 101
COLORADO SPRINGS, CO. 80903
OFFICE: 719-635-6422
FAX: 719-635-6426
www.tnesinc.com

APEX RANCH ESTATES

FINAL DRAINAGE MAP
DEVELOPED CONDITIONS

DESIGNED BY QNA
DRAWN BY LAE
CHECKED BY LDR
H-SCALE 1"=200'
V-SCALE
JOB NO. 0565.00
DATE ISSUED 8/26/08
SHEET NO. 1 OF 1

APPENDIX G: DRAINAGE MAPS

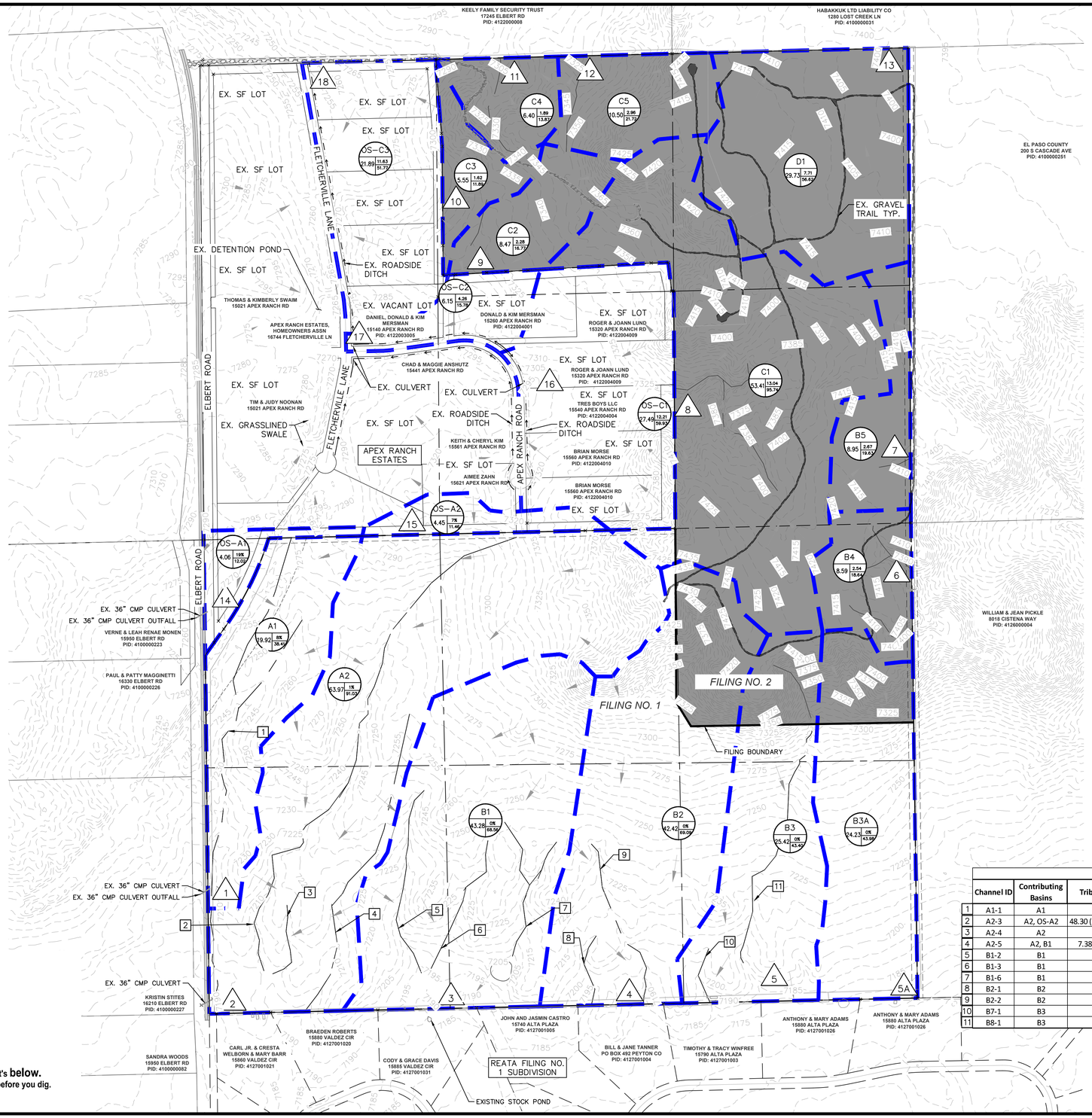

LEGEND

A = BASIN DESIGNATION
B = AREA (ACRES)
C = BASIN IMPERVIOUSNESS
D = 100YR DESIGN STORM RUNOFF (CFS)

= DESIGN POINT

EXISTING FLOW DIRECTION

PROPOSED PROPERTY LINE
EXISTING PROPERTY LINE
PROPOSED EASEMENT LINE
DRAINAGE BASIN BOUNDARY
EXISTING MAJOR CONTOUR
EXISTING MINOR CONTOUR

FILING NO. 2

A - Upper Black Squirrel Drainage Basin (CHBS2000)
B - La Vega Ranch Drainage Basin (CHBR0400)
C - East Kiowa Creek Drainage Basin (KIKI0400)
D - Bijou Creek Drainage Basin (BIBI0200)

EXISTING CONDITIONS RATIONAL CALCULATIONS SUMMARY

DESIGN POINT	TRIBUTARY BASINS	TRIBUTARY AREA (AC)	CFS Q2	CFS Q5	CFS Q100	% IMPERVIOUS
FDR Basins						
1	A1	19.92	4.19	8.43	38.41	8%
2	A2	63.97	3.54	13.47	91.03	1%
3	B1	43.28	1.87	9.34	68.56	0%
4	B2	42.42	1.88	9.41	69.09	0%
5	B3	25.42	1.18	5.91	43.40	0%
5A	B3A	24.23	1.20	5.99	43.98	0%
14	OS-A1	4.06	2.27	3.62	12.02	19%
15	OS-A2	4.45	0.70	2.10	11.46	7%
ON-SITE BASIN TOTAL						
BASIN A TOTAL		83.89	7.73	21.90	129.44	3%
BASIN B TOTAL		135.35	6.13	30.64	225.03	0%
ON-SITE TOTAL		**219.24**	**13.86**	**52.55**	**354.46**	**1%**
OFF-SITE BASIN TOTAL						
OFF-SITE BASIN A		8.51	2.97	5.72	23.48	13%
OFF-SITE TOTAL		**8.51**	**2.97**	**5.72**	**23.48**	**13%**
SITE TOTAL		**227.75**	**16.83**	**58.27**	**377.95**	**1%**

Existing Conditions Natural Channels Flow Summary

	Channel ID	Contributing Basins	Tributary Area (ac)	Basin Area (ac)	Basin 100-yr Flow (cfs)	Channel 100-yr Flow (cfs)	Velocity (ft/s)	Normal Depth (ft)
1	A1-1	A1	19.92	19.92	38.41	38.41	2.56	0.47
2	A2-3	A2, OS-A2	48.30 (A2) + 4.45 (OS-A2)	63.97 (A2) + 4.45 (OS-A2)	91.03(A2) + 11.46 (OS-A2)	79.02	4.86	0.88
3	A2-4	A2	2.73	63.97	91.03	2.71	1.49	0.23
4	A2-5	A2, B1	7.38 (A2) + 2.81 (B1)	63.97 (A2) + 43.28 (B1)	91.03(A2) + 72.48 (B1)	15.53	2.02	0.27
5	B1-2	B1	16.60	43.28	72.48	27.80	3.73	0.30
6	B1-3	B1	6.15	43.28	72.48	10.30	2.56	0.27
7	B1-6	B1	13.08	43.28	72.48	21.90	3.01	0.36
8	B2-1	B2	4.52	42.42	69.09	7.36	2.25	0.19
9	B2-2	B2	36.7	42.42	69.09	59.77	4.90	0.49
10	B7-1	B3	2.20	25.42	43.40	3.76	1.73	0.20
11	B8-1	B3	17.57	25.42	43.40	30.00	3.41	0.29

GRAPHIC SCALE IN FEET
0 150 300 600

NORTH

811 Know what's **below.** **Call** before you dig.

NO.	REVISION	BY	DATE	APPR.

Kimley»Horn
2024 KIMLEY-HORN AND ASSOCIATES, INC.
2 N NEVADA ST, SUITE 900
COLORADO SPRINGS, CO 80903 719-453-0180

DESIGNED BY: KRK
DRAWN BY: AJL
CHECKED BY: KRK
DATE: 09/10/24

OVERLOOK FILING NO. 1
EL PASO COUNTY, COLORADO
CONSTRUCTION DOCUMENTS
EXISTING DRAINAGE MAP

PRELIMINARY
FOR REVIEW ONLY
NOT FOR CONSTRUCTION
Kimley»Horn
Kimley-Horn and Associates, Inc.

PROJECT NO.
196239003

SHEET
EX-1

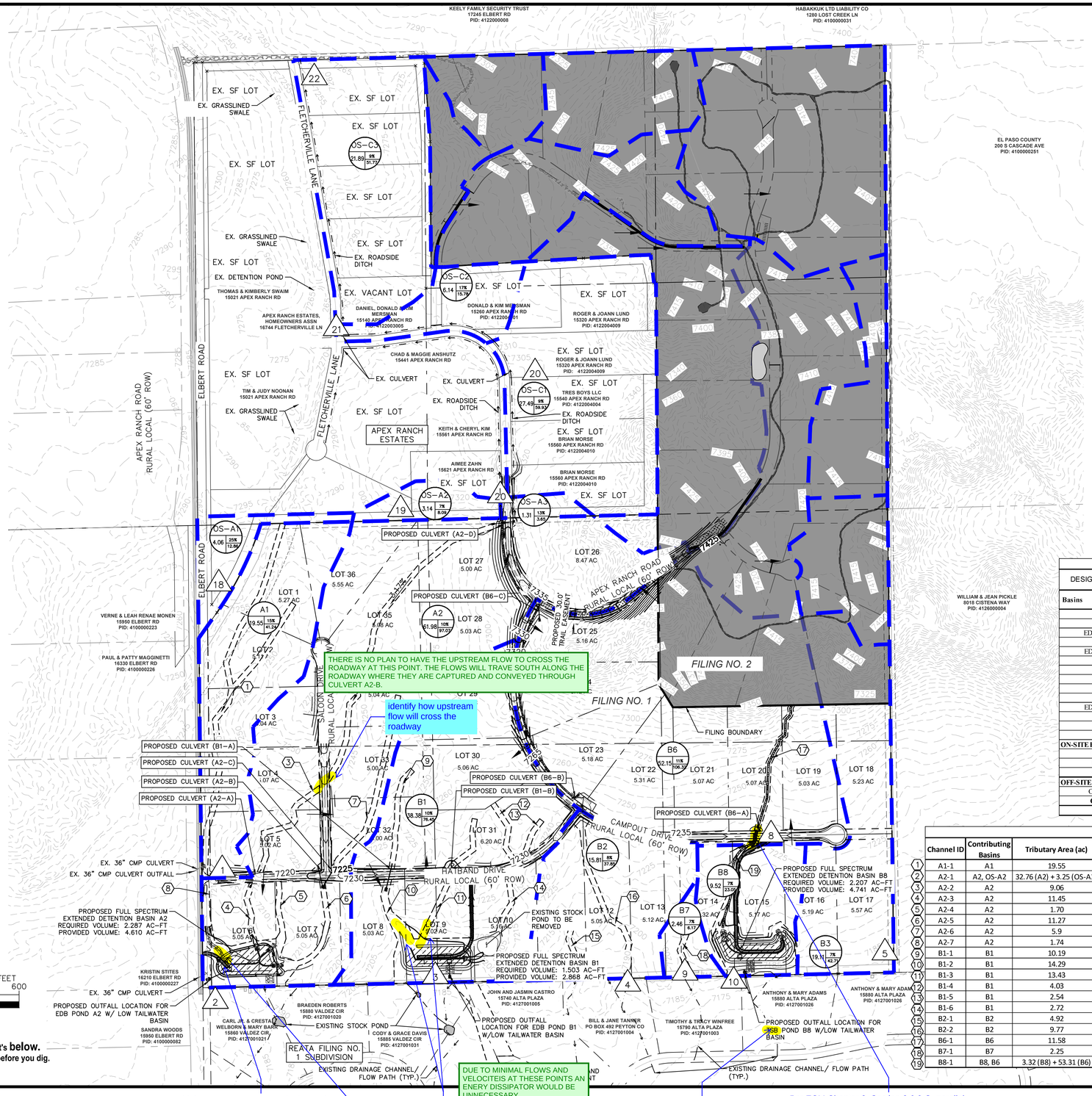

THERE IS NO PLAN TO HAVE THE UPSTREAM FLOW TO CROSS THE ROADWAY AT THIS POINT. THE FLOWS WILL TRAVE SOUTH ALONG THE ROADWAY WHERE THEY ARE CAPTURED AND CONVEYED THROUGH CULVERT A2-B.

identify how upstream flow will cross the roadway

DUE TO MINIMAL FLOWS AND VELOCITEIS AT THESE POINTS AN ENERY DISSIPATOR WOULD BE UNNECESSARY

AFTER DISCUSSION WITH EPC THE MAINTENANCE ACCESS ROAD IS TO REMAIN ALONG ELBERT RD

Maintenance access must be located near all pond components to ensure they are accessible for maintenance and operation. Please extend the access accordingly.

An energy dissipator (rock chute-forebay) is required at all pond inlets.

No longer TSB, please remove.

UPDATED

Per ECM Chapter 2, Section 2.6.9.G, parallel culverts are not allowed due to maintenance concerns. Please revise the design accordingly. If this condition cannot be met, please submit a deviation request to the County Engineer for consideration.

NOTED. DEVIATION TO BE SUBMITTED WITH REVISED FDR

LEGEND

A = BASIN DESIGNATION
B = AREA (ACRES)
C = BASIN IMPERVIOUSNESS
D = 100YR DESIGN STORM RUNOFF (CFS)

= DESIGN POINT

PROPOSED FLOW DIRECTION

PROPOSED PROPERTY LINE
EXISTING PROPERTY LINE
PROPOSED EASEMENT LINE
DRAINAGE BASIN BOUNDARY
EXISTING MAJOR CONTOUR
EXISTING MINOR CONTOUR
PROPOSED MAJOR CONTOUR
PROPOSED MINOR CONTOUR
FILING NO. 2
EROSION CONTROL TRM MAT

NOTES

1. ALL PROPOSED EASEMENTS ARE 30' DRAINAGE EASEMENTS UNLESS OTHERWISE NOTED
2. ALL PROPOSED CULVERTS ARE TO BE RCP UNLESS OTHERWISE NOTED.

A - Upper Black Squirrel Drainage Basin (CHBS2000)
B - La Vega Ranch Drainage Basin (CHBR0400)
C - East Kiowa Creek Drainage Basin (KIKI0400)
D - Bijou Creek Drainage Basin (BIBI0200)

PROPOSED CONDITIONS RATIONAL CALCULATIONS SUMMARY

DESIGN POINT	TRIBUTARY BASINS	TRIBUTARY AREA (AC)	CFS Q2	CFS Q5	CFS Q100	% IMPERVIOUS	DETAINED 100 YR OUTFLOW (CFS)
Basins							
1	A1	19.55	5.41	10.41	41.24	15%	
2	A2	61.98	9.05	20.85	97.07	10%	
EDB A2	A2						64.40
3	B1	38.38	7.07	16.38	76.45	10%	
EDB B1	B1						42.45
4	B2	15.81	2.83	7.46	37.85	8%	
5	B3	19.11	2.61	7.83	42.71	7%	
8	B6	52.15	10.51	23.44	106.32	11%	
9	B7	2.46	0.38	1.13	6.17	7%	
10	B8	9.52	1.41	4.22	23.05	7%	
EDB B8	B6+B8						39.40
18	OS-A1	4.06	2.57	4.12	12.86	25%	
19	OS-A2	3.14	0.49	1.48	8.09	7%	
20	OS-A3	1.31	0.43	0.87	3.65	13%	
ON-SITE BASIN TOTAL							
BASIN A TOTAL		81.53	14.46	31.26	138.30	11%	
BASIN B TOTAL		137.43	24.80	60.46	292.55	10%	
ON-SITE TOTAL		**218.96**	**39.25**	**91.72**	**430.86**	**10%**	
OFF-SITE BASIN TOTAL							
OFF-SITE BASIN A		8.51	3.49	6.47	24.60	16%	
OFF-SITE TOTAL		**8.51**	**3.49**	**6.47**	**24.60**	**16%**	
SITE TOTAL		**8.51**	**42.74**	**98.19**	**455.46**	**10%**	

Proposed Conditions Natural Channels Flow Summary

	Channel ID	Contributing Basins	Tributary Area (ac)	Basin Area (ac)	Basin 100-yr Flow (cfs)	Channel 100-yr Flow (cfs)	Velocity (ft/s)	Normal Depth (ft)	Lining
1	A1-1	A1	19.55	19.55	41.24	41.24	2.62	0.48	
2	A2-1	A2, OS-A2	32.76 (A2) + 3.25 (OS-A2)	61.98 (A2) +3.14 (OS-A2)	97.07 (A2) + 8.09(OS-A2)	58.15	3.78	0.58	
3	A2-2	A2	9.06	61.98	97.07	14.19	2.47	0.18	
4	A2-3	A2	11.45	61.98	97.07	17.93	3.07	0.39	
5	A2-4	A2	1.70	61.98	97.07	2.66	1.49	0.23	
6	A2-5	A2	11.27	61.98	97.07	17.65	2.18	0.30	
7	A2-6	A2	5.9	61.98	97.07	9.24	1.83	0.18	
8	A2-7	A2	1.74	58.27	97.07	2.90	0.97	0.10	
9	B1-1	B1	10.19	40.74	76.45	19.12	2.67	0.28	
10	B1-2	B1	14.29	40.74	76.45	26.82	3.69	0.23	
11	B1-3	B1	13.43	40.74	76.45	25.20	3.41	0.46	
12	B1-4	B1	4.03	40.74	76.45	7.56	2.47	0.14	
13	B1-5	B1	2.54	40.74	76.45	4.77	1.65	0.11	
14	B1-6	B1	2.72	40.74	76.45	5.10	1.81	0.16	
15	B2-1	B2	4.92	16.00	37.85	11.64	2.67	0.25	
16	B2-2	B2	9.77	16.00	37.85	23.11	3.52	0.28	
17	B6-1	B6	11.58	53.31	106.32	23.09	6.66	0.29	TRM
18	B7-1	B7	2.25	2.46	6.17	5.64	1.91	0.23	
19	B8-1	B8, B6	3.32 (B8) + 53.31 (B6)	9.52 (B8) + 52.15 (B6)	23.05 (B8) + 106.32 (B6)	118.80	5.44	0.64	TRM

NO.	REVISION	BY	DATE	APPR.

Kimley»Horn
© 2024 KIMLEY-HORN AND ASSOCIATES, INC.
2 N NEVADA ST, SUITE 900
COLORADO SPRINGS, CO 80903 719-453-0180

DESIGNED BY: KRK
DRAWN BY: AJL
CHECKED BY: KRK
DATE: 09/10/24

OVERLOOK FILING NO. 1
EL PASO COUNTY, COLORADO
CONSTRUCTION DOCUMENTS
PROPOSED DRAINAGE MAP

PRELIMINARY
FOR REVIEW ONLY
NOT FOR CONSTRUCTION
Kimley»Horn
Kimley-Horn and Associates, Inc.

PROJECT NO. 196239003

SHEET
DB-1

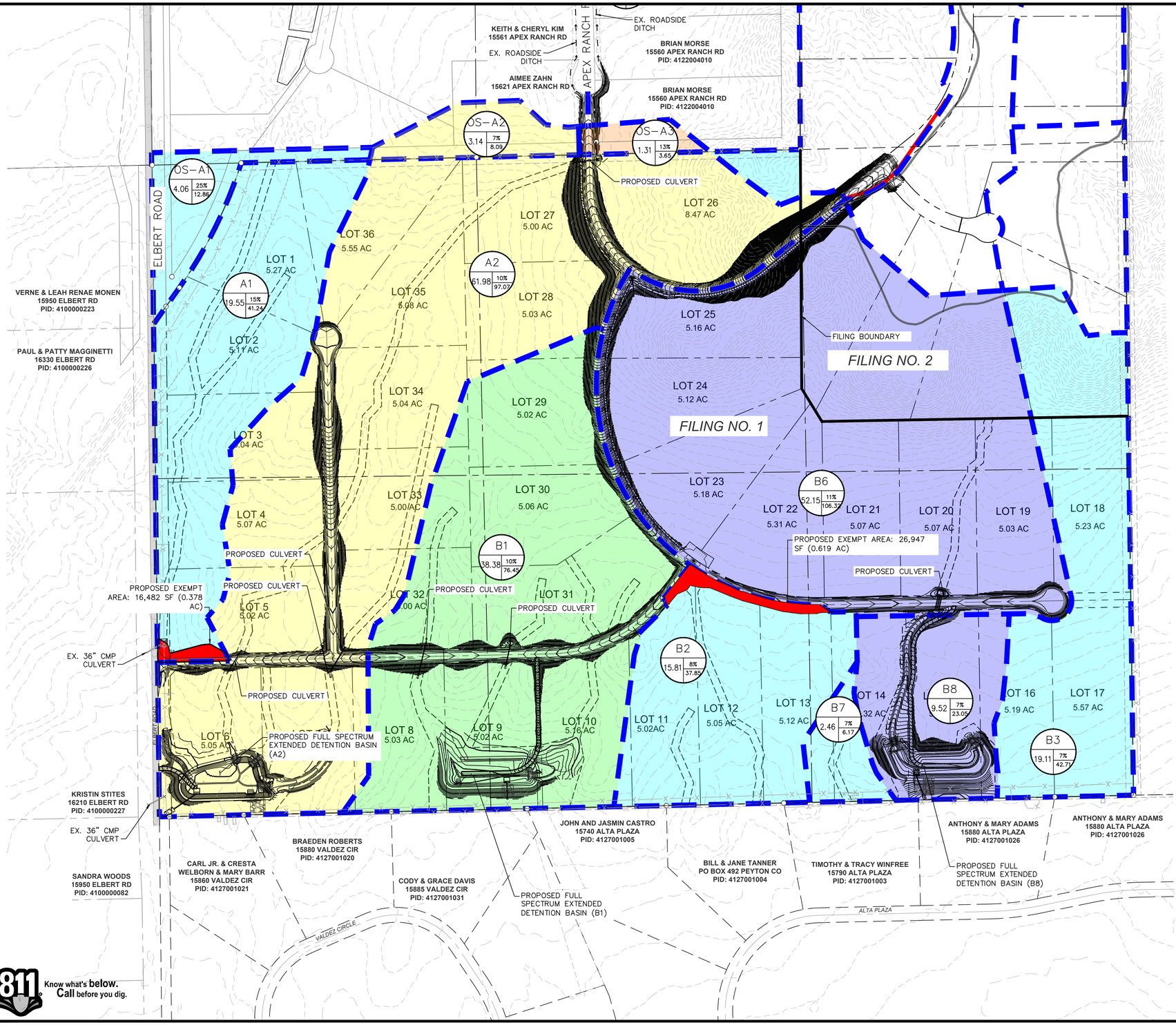

LEGEND

A = BASIN DESIGNATION
B = AREA (ACRES)
C = BASIN IMPERVIOUSNESS
D = 100YR DESIGN STORM RUNOFF (CFS)

PROPOSED PROPERTY LINE
EXISTING PROPERTY LINE
PROPOSED EASEMENT LINE
DRAINAGE BASIN BOUNDARY
THE LARGE LOT EXCLUSION I.7.1.B.5
TRIBUTARY TO POND A2
TRIBUTARY TO POND B1
TRIBUTARY TO POND B8
TRIBUTARY TO APEX RANCH POND
PROPOSED EXEMPT AREA

EXEMPT AREAS (ECM I.7.1.C.1)

BASIN A1	= ±16,482 SF
BASIN B2	= ±26,947 SF
TOTAL	= ±43,429 SF (0.99 ACRES)

NORTH

GRAPHIC SCALE IN FEET
0 100 200 400

NO.	REVISION	BY	DATE	APPR.

Kimley»Horn
2023 KIMLEY-HORN AND ASSOCIATES, INC.
2 N NEVADA ST, SUITE 900
COLORADO SPRINGS, CO 80903 719-453-0180

DESIGNED BY: KRK
DRAWN BY: AJL
CHECKED BY: KRK
DATE: 11/27/23

OVERLOOK FILING NO. 1
EL PASO COUNTY, COLORADO
PRELIMINARY DESIGN PLANS
EXCLUSION EXHIBIT DRAINAGE MAP-FILING NO. 1

PRELIMINARY
FOR REVIEW ONLY
NOT FOR CONSTRUCTION
Kimley»Horn
Kimley-Horn and Associates, Inc.

PROJECT NO.
196239003

SHEET
EX-3

APPENDIX H: POND OPCC

Kimley»Horn

2 North Nevada, Suite 900
Colorado Springs, Colorado 80903

please also provide a cost estimate of the other storm facilities (i.e. culverts, channel protection etc.)

BASED ON MEETING WITH EPC. ADDITION QUANTITIES OF OTHER STORMWATER FACILITIES SHOW ON PREVIOUSLY SUBMITTED FAE.

Project: Overlook Filing No. 1
Project Number:
Date: September 17, 2024

Prepared By: KRK
Checked By: KRK

Pond A2

Item	Unit	Quantity	Unit Cost	Cost
Rip Rap Chute #1 / Forebay	CY	36	$ 210.00	$7,560.00
Rip Rap Chute #2/ Forebay	CY	45	$ 210.00	$9,450.00
Rip Rap Chute #3/ Forebay	CY	48	$ 210.00	$10,080.00
West Channel	CY	170	$ 210.00	$35,700.00
Concrete Trickle Channel	LF	445	$ 64.00	$28,480.00
Concrete Micropool	EA	1	$ 12,000.00	$12,000.00
Concrete Outlet Structure	EA	1	$ 8,500.00	$8,500.00
42" RCP Outfall Pipe	LF	100	$ 201.00	$20,100.00
42" RCP FES	EA	1	$ 1,206.00	$1,206.00
Toe Wall	EA	1	$ 2,000.00	$2,000.00
Outfall Riprap Protection	CY	34	$ 210.00	$7,140.00
Concrete Cut Off Wall	EA	1	$ 8,000.00	$8,000.00
Rip Rap Emergency Spillway	CY	197	$ 210.00	$41,370.00
Maintenance Road (6" Thick)	CY	47	$ 56.00	$2,632.00
Total				$194,218.00

Pond B1

Item	Unit	Quantity	Unit Cost	Cost
Rip Rap Chute #1 / Forebay	CY	42	$ 210.00	$8,820.00
Concrete Trickle Channel	LF	345	$ 64.00	$22,080.00
Concrete Micropool	EA	1	$ 12,000.00	$12,000.00
Concrete Outlet Structure	EA	1	$ 8,500.00	$8,500.00
36" RCP Outfall Pipe	LF	59	$ 151.00	$8,909.00
36" RCP FES	EA	1	$ 906.00	$906.00
Toe Wall	EA	1	$ 2,000.00	$2,000.00
Outfall Riprap Protection	CY	17	$ 210.00	$3,570.00
Concrete Cut Off Wall	EA	1	$ 8,000.00	$8,000.00
Rip Rap Emergency Spillway	CY	178	$ 210.00	$37,380.00
Maintenance Road (6" Thick)	CY	198	$ 56.00	$11,088.00
Total				$123,253.00

Pond B8

Item	Unit	Quantity	Unit Cost	Cost
Rip Rap Chute #1 / Forebay	CY	174	$ 210.00	$36,540.00
Rip Rap Chute #2/ Forebay	CY	54	$ 210.00	$11,340.00
Concrete Trickle Channel	LF	428	$ 64.00	$27,392.00
Concrete Micropool	EA	1	$ 12,000.00	$12,000.00
Concrete Outlet Structure	EA	1	$ 8,500.00	$8,500.00
36" RCP Outfall Pipe	LF	68	$ 151.00	$10,268.00
36" RCP FES	EA	1	$ 906.00	$906.00
Toe Wall	EA	1	$ 2,000.00	$2,000.00
Outfall Riprap Protection	CY	25	$ 210.00	$5,250.00
Concrete Cut Off Wall	EA	1	$ 8,000.00	$8,000.00
Rip Rap Emergency Spillway	CY	268	$ 210.00	$56,280.00
Maintenance Road (6" Thick)	CY	98	$ 56.00	$5,488.00
Total				$183,964.00
TOTAL COST =				$501,435.00

Conceptual Opinion of Probable Construction Cost

The Engineer has no control over the cost of labor, materials, equipment, or over the Contractor's methods of determining prices or over competitive bidding or market conditions. Opinions of probable costs provided herein are based on the information known to Engineer at this time and represent only the Engineer's judgment as a design professional familiar with the construction industry. The Engineer cannot and does not guarantee that proposals, bids, or actual construction costs will not vary from its opinions of probable costs.