MARKSHEFFEL ROAD (SEGMENT M2)

COUNTY OF EL PASO, STATE OF COLORADO

STREET IMPROVEMENT PLAN

JULY 2023

SF-22-030

CITY OF COLORADO SPRINGS STATEMENT:
THE CITY OF COLORADO SPRINGS RECOGNIZES THE DESIGN ENGINEER AS HAVING RESPONSIBILITY FOR THE DESIGN. THE CITY HAS LIMITED ITS SCOPE OF REVIEW ACCORDINGLY.

AGENCIES

OWNER/DEVELOPER:	SR LAND, LLC 20 BOULDER CRESCENT, SUITE 201 COLORADO SPRINGS, CO 80903 JAMES F. MORLEY (719) 471–1742
CIVIL ENGINEER:	JR ENGINEERING, LLC 5475 TECH CENTER DRIVE COLORADO SPRINGS, CO 80919 MIKE BRAMLETT P.E. (303) 267–6240
COUNTY ENGINEERING:	EL PASO COUNTY PLANNING AND COMMUNITY DEVELOPMENT 2880 INTERNATIONAL CIRCLE, SUITE 110 COLORADO SPRINGS, CO 80910 JEFF RICE, P.E. (719) 520–6300
TRAFFIC ENGINEERING:	EL PASO COUNTY DEPARTMENT OF PUBLIC WORKS 3275 AKERS DRIVE COLORADO SPRINGS, CO 80922 JOSHUA PALMER, P.E. (719) 520–6460
WATER RESOURCES:	STERLING RANCH METRO DISTRICT ENGINEERS JDS–HYDRO CONSULTANTS 545 E. PIKES PEAK AVE., SUITE 300 COLORADO SPRINGS, CO 80903 JOHN MCGINN (719) 668–8769
FIRE DISTRICT:	BLACK FOREST FIRE PROTECTION DISTRICT 11445 TEACHOUT ROAD COLORADO SPRINGS, CO 80908 CHIEF BRYAN JACK (719) 495–4300
GAS DEPARTMENT:	COLORADO SPRINGS UTILITIES 7710 DURANT DR. COLORADO SPRINGS, CO 80947 TIM WENDT (719) 668–3556
ELECTRIC DEPARTMENT:	MOUNTAIN VIEW ELECTRIC 11140 E. WOODMEN ROAD FALCON, CO 80831 (719) 495–2283
COMMUNICATIONS:	QWEST COMMUNICATIONS (U.N.C.C. LOCATORS) (800) 922–1987 AT&T (LOCATORS) (719) 635–3674
CITY PUBLIC WORKS:	PUBLIC WORKS DEPARTMENT 30 S. NEVADA AVENUE, SUITE 401 COLORADO SPRINGS, CO 80903 (719)–385–5918

Curb & Gutter Review:
STM-REV23-0417

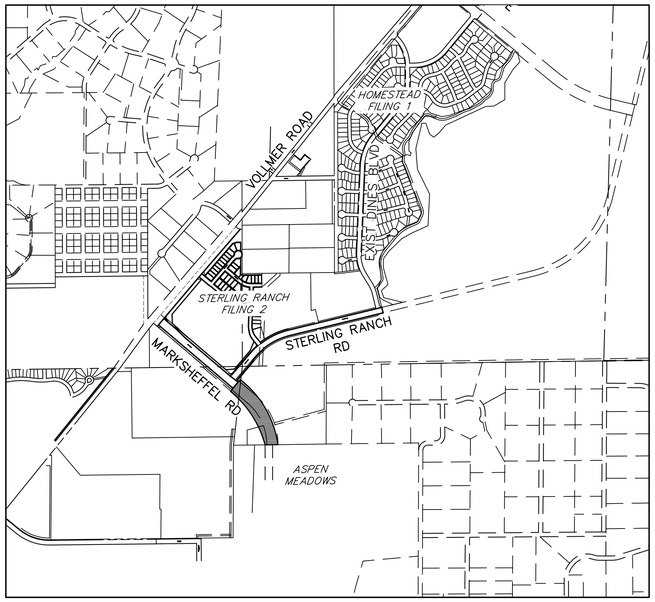

VICINITY MAP
SCALE : 1"=1,000'

REVIEW:
STREET DESIGN FOR CITY ENGINEERING: _____ DATE _____
CURB & GUTTER REVIEW: _____ DATE 7-24-23
FINAL REVIEW _____ DATE _____
SIGNAGE AND STRIPING REVIEW Zaker Alazzeh DATE 7-24-23

DESIGN DATA:	
SIDEWALKS: WIDTH: 6'/10'	ROW WIDTH: 107'
LOCATION: ATTACHED [ ] DETACHED [X]	FL-FL: 72'
DESIGN SPEED: 40 M.P.H	STREET TYPE: URBAN PRINCIPAL ARTERIAL
CURB TYPE: 1[X] 2[ ] 3[ ] 4[ ] 5[ ]	PAVEMENT: TYPE: HMA [X] PCC [ ]
	THICKNESS: _____
	COMPOSITE SECTION: HMA _____ ABC BASE _____ HMA _____ RC BASE _____

Call 719-395-5977 or go online at coloradosprings.gov/public-works to schedule an inspection with the EDRD inspector.

SHEET INDEX

1 COVER SHEET
2 NOTES AND DETAILS
3 ROADWAY PLAN & PROFILE
4 SIGNAGE & STRIPING
5 CROSS–SECTIONS

OWNER/DEVELOPER STATEMENT

I, THE OWNER/DEVELOPER HAVE READ AND WILL COMPLY WITH ALL OF THE REQUIREMENTS SPECIFIED IN THESE DETAILED PLANS AND SPECIFICATIONS.

James F. Morley — 7/17/23
JAMES F. MORLEY — DATE

SR LAND, LLC
20 BOULDER CRESCENT, SUITE 201
COLORADO SPRINGS, CO 80903

EL PASO COUNTY STATEMENT

COUNTY PLAN REVIEW IS PROVIDED ONLY FOR GENERAL CONFORMANCE WITH COUNTY DESIGN CRITERIA. THE COUNTY IS NOT RESPONSIBLE FOR THE ACCURACY AND ADEQUACY OF THE DESIGN, DIMENSIONS, AND/OR ELEVATIONS WHICH SHALL BE CONFIRMED AT THE JOB SITE. THE COUNTY THROUGH THE APPROVAL OF THIS DOCUMENT ASSUMES NO RESPONSIBILITY FOR COMPLETENESS AND/OR ACCURACY OF THIS DOCUMENT.

FILED IN ACCORDANCE WITH THE REQUIREMENTS OF THE EL PASO COUNTY LAND DEVELOPMENT CODE, DRAINAGE CRITERIA MANUAL, VOLUMES 1 AND 2, AND ENGINEERING CRITERIA MANUAL AS AMENDED.

IN ACCORDANCE WITH ECM SECTION 1.12, THESE CONSTRUCTION DOCUMENTS WILL BE VALID FOR CONSTRUCTION FOR A PERIOD OF 2 YEARS FROM THE DATE SIGNED BY THE EL PASO COUNTY ENGINEER. IF CONSTRUCTION HAS NOT STARTED WITHIN THOSE 2 YEARS, THE PLANS WILL NEED TO BE RESUBMITTED FOR APPROVAL, INCLUDING PAYMENT OF REVIEW FEES AT THE PLANNING AND COMMUNITY DEVELOPMENT DIRECTORS DISCRETION.

JOSHUA PALMER, P.E. — DATE

COUNTY ENGINEER/ECM ADMINISTRATOR

BASIS OF BEARINGS:
BEARINGS ARE BASED ON THE SOUTH LINE OF THE SOUTHWEST QUARTER OF SECTION 34, TOWNSHIP 12 SOUTH, RANGE 65 WEST OF THE 6TH P.M. AS MONUMENTED AT THE SOUTHWEST CORNER OF SAID SOUTHWEST QUARTER BY A 2–1/2" ALUMINUM CAP STAMPED "LS 11624" AND AT THE SOUTHEAST CORNER OF SAID SOUTHWEST QUARTER BY A 2–1/2" ALUMINUM CAP STAMPED "LS 11624", SAID LINE BEARS N89°14'14"E, A DISTANCE OF 2,722.56 FEET.

NOTE:

STERLING RANCH METRO DISTRICT AND/OR PROPERTY OWNER TO COORDINATE AND ENGAGE WITH COLORADO SPRINGS UTILITIES (STREET LIGHT PROGRAM DESIGN) AND MOUNTAIN VIEW ELECTRIC (ELECTRIC SERVICE PROVIDER) TO ADHERE TO CSU AND CITY CRITERIA REGARDING ARTERIAL ROADWAY ILLUMINATION. PLEASE NOTE, ADDITIONAL STREET LIGHTING ABOVE STANDARD CRITERIA WILL BE REQUIRED ON BOTH SIDES OF THE CURVED ROADWAY SECTION TO IMPROVE DRIVER AWARENESS. STREET LIGHTS ARE TO BE INSTALLED BY THE STERLING RANCH METRO DISTRICT OR PROPERTY OWNER AND OPERATIONAL PRIOR RO PRELIMINARY ACCEPTANCE OF THE IMPROVEMENTS BY CITY OF COLORADO SPRINGS.

ENGINEER'S STATEMENT

THESE DETAILED PLANS AND SPECIFICATIONS WERE PREPARED UNDER MY DIRECT SUPERVISION. SAID PLANS AND SPECIFICATIONS HAVE BEEN PREPARED ACCORDING TO THE CRITERIA ESTABLISHED BY THE COUNTY FOR DETAILED ROADWAY, DRAINAGE, GRADING AND EROSION CONTROL PLANS AND SPECIFICATIONS, AND SAID PLANS AND SPECIFICATIONS ARE IN CONFORMITY WITH APPLICABLE MASTER DRAINAGE PLANS AND MASTER TRANSPORTATION PLANS. SAID PLAN AND SPECIFICATIONS MEET THE PURPOSES FOR WHICH THE PARTICULAR ROADWAY AND DRAINAGE FACILITIES ARE DESIGNED AND ARE CORRECT TO THE BEST OF MY KNOWLEDGE AND BELIEF. I ACCEPT RESPONSIBILITY FOR ANY LIABILITY CAUSED BY ANY NEGLIGENT ACTS, ERRORS OR OMISSIONS ON MY PART IN PREPARATION OF THESE DETAILED PLANS AND SPECIFICATIONS.

COLORADO REGISTERED MIKE A. BRAMLETT 32314 PROFESSIONAL ENGINEER

7/17/2023
MIKE A. BRAMLETT, P.E. — DATE
COLORADO P.E. 32314
FOR AND ON BEHALF OF JR ENGINEERING, LLC

BENCHMARKS

1. THE TOP OF AN ALUMINUM SURVEYORS CAP, STAMPED "9853", AT THE SOUTHEAST BOUNDARY CORNER OF BARBARICK SUBDIVISION
   NORTHING = 411416.273
   EASTING = 235167.071
   ELEVATION = 7023.42
2. THE TOP OF A RED PLASTIC SURVEYORS CAP, ILLEGIBLE, AT THE NORTHWEST BOUNDARY CORNER OF PAWNEE RANCHEROS SUBDIVISION
   NORTHING = 410095.404
   EASTING = 235052.131
   ELEVATION = 7000.40
3. THE TOP OF A RED PLASTIC SURVEYORS CAP, STAMPED "38141", AT THE SOUTHWEST BOUNDARY CORNER OF BARBARICK SUBDISION
   NORTHING = 411399.962
   EASTING = 233849.817
   ELEVATION = 7030.82

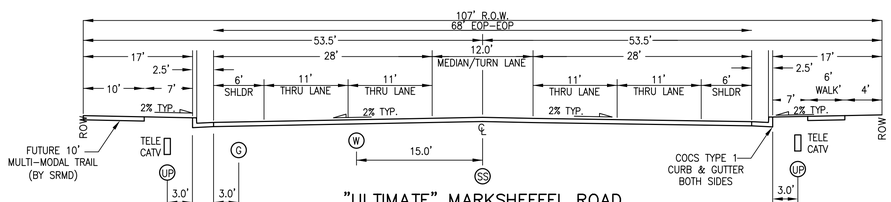

"ULTIMATE" MARKSHEFFEL ROAD
4 LANE URBAN PRINCIPAL ARTERIAL CROSS SECTION
(CITY OF COLORADO SPRINGS CROSS SECTION)
DESIGN SPEED: 40 M.P.H. – POSTED SPEED: 35 M.P.H
SCALE: NTS

Know what's below. Call before you dig.

DISTRICT APPROVALS

THESE DOCUMENTS HAVE BEEN REVIEWED AND APPROVED FOR STORM DRAIN AND ASSOCIATED UTILITY SERVICE CONSTRUCTION.

James F. Morley — 7/17/23
FOR AND ON BEHALF OF THE STERLING RANCH METRO DISTRICT NO.3 — DATE

PCD FILE NO. SF–22–030

UNTIL SUCH TIME AS THESE DRAWINGS ARE APPROVED BY THE APPROPRIATE REVIEWING AGENCIES, JR ENGINEERING APPROVES THEIR USE ONLY FOR THE PURPOSES DESIGNATED BY WRITTEN AUTHORIZATION.

PREPARED FOR
SR LAND, LLC
20 BOULDER CRESCENT
SUITE 201
COLORADO SPRINGS, CO 80903
JAMES F. MORLEY
(719) 471–1742

JR ENGINEERING
A Westrian Company
Centennial 303–740–9393 • Colorado Springs 719–593–2593
Fort Collins 970–491–9888 • www.jrengineering.com

No.	REVISION	BY	DATE

H–SCALE	N/A
V–SCALE	N/A
DATE	7/17/23
DESIGNED BY	RAB
DRAWN BY	CWC
CHECKED BY	

MARKSHEFFEL ROAD (SEGMENT M2)
COVER SHEET

SHEET 1 OF 5
JOB NO. 25188.11

X:\25100\00 all\25188\11\Drawings\Sheet Dwgs\Marksheffel (South)\CV01- Marksheffel South.dwg, CV01, 7/17/2023 10:45:04 AM, CS

COLORADO SPRINGS GENERAL CONSTRUCTION NOTES:

1. ALL MATERIALS, WORKMANSHIP, AND CONSTRUCTION OF SITE IMPROVEMENTS SHALL MEET OR EXCEED THE SITE WORK STANDARDS AND SPECIFICATIONS AND THE STANDARDS AND SPECIFICATIONS SET FORTH CITY OF COLORADO SPRINGS SUBDIVISION POLICY MANUAL AND STANDARD SPECIFICATIONS, AND APPLICABLE LOCAL, STATE, AND FEDERAL REGULATIONS. WHERE THERE IS CONFLICT BETWEEN THESE PLANS AND THE SPECIFICATIONS, OR ANY APPLICABLE STANDARDS, THE HIGHER QUALITY STANDARD SHALL APPLY.

2. THE CONTRACTOR IS SPECIFICALLY CAUTIONED THAT THE LOCATION AND/OR ELEVATION OF EXISTING UTILITIES, AS SHOWN ON THESE PLANS, IS BASED ON RECORDS OF THE VARIOUS UTILITY COMPANIES AND, WHERE POSSIBLE, MEASUREMENTS TAKEN IN THE FIELD. THE INFORMATION IS NOT TO BE RELIED UPON AS BEING EXACT OR COMPLETE. THE CONTRACTOR MUST CALL THE LOCAL UTILITY LOCATION CENTER AT LEAST 48 HOURS BEFORE ANY EXCAVATION TO REQUEST EXACT FIELD LOCATIONS OF THE UTILITIES. PRIOR TO CONSTRUCTION, THE CONTRACTOR SHALL VERIFY PERTINENT LOCATIONS AND ELEVATIONS, ESPECIALLY AT THE CONNECTION POINTS AND AT POTENTIAL UTILITY CONFLICTS. IT SHALL BE THE RESPONSIBILITY OF THE CONTRACTOR TO RELOCATE ALL EXISTING UTILITIES THAT CONFLICT WITH THE PROPOSED IMPROVEMENTS SHOWN ON THESE PLANS.

3. THE CONTRACTOR SHALL SECURE ALL APPLICABLE LICENSES AND PERMITS TO COMPLETE THE CONSTRUCTION IN COMPLIANCE WITH ALL LOCAL, STATE, AND FEDERAL REGULATIONS.

4. THE CONTRACTOR SHALL COORDINATE AND COOPERATE WITH THE CITY OF COLORADO SPRINGS AND ALL UTILITY COMPANIES INVOLVED WITH REGARD TO RELOCATIONS OR ADJUSTMENTS OF EXISTING UTILITIES DURING CONSTRUCTION AND TO ASSURE THAT THE WORK IS ACCOMPLISHED IN A TIMELY FASHION AND WITH THE MINIMUM DISRUPTION OF SERVICE. THE CONTRACTOR SHALL BE RESPONSIBLE FOR CONTACTING ALL PARTIES AFFECTED BY ANY DISRUPTION OF ANY UTILITY SERVICE.

5. THE CONTRACTOR SHALL HAVE ONE (1) SIGNED COPY OF THE APPROVED PLANS, ONE (1) COPY OF THE APPROPRIATE STANDARDS AND SPECIFICATIONS, AND A COPY OF ALL PERMITS NEEDED FOR THE JOB, ON-SITE AT ALL TIMES.

6. THE CONTRACTOR SHALL BE RESPONSIBLE FOR ALL ASPECTS OF SAFETY INCLUDING, BUT NOT LIMITED TO, EXCAVATION, TRENCHING, SHORING, TRAFFIC CONTROL, AND SECURITY.

7. IF, DURING THE CONSTRUCTION PROCESS, CONDITIONS ARE ENCOUNTERED THAT COULD INDICATE A SITUATION THAT IS NOT IDENTIFIED IN THE PLANS OR SPECIFICATIONS, THE CONTRACTOR SHALL CONTACT THE ENGINEER OF RECORD AND THE CITY OF COLORADO SPRINGS INSPECTOR IMMEDIATELY.

8. ALL REFERENCES TO ANY PUBLISHED STANDARDS SHALL REFER TO THE LATEST REVISION OF SAID STANDARD, UNLESS SPECIFICALLY STATED OTHERWISE.

9. THE CONTRACTOR SHALL SUBMIT A TRAFFIC CONTROL PLAN, IN ACCORDANCE WITH M.U.T.C.D. TO THE APPROPRIATE RIGHT-OF-WAY AUTHORITY (CITY, COUNTY, OR STATE) FOR APPROVAL, PRIOR TO ANY CONSTRUCTION ACTIVITIES WITHIN, OR AFFECTING THE RIGHT-OF-WAY. THE CONTRACTOR SHALL BE RESPONSIBLE FOR PROVIDING ANY AND ALL TRAFFIC CONTROL DEVICES AS MAY BE REQUIRED BY THE CONSTRUCTION ACTIVITIES.

10. THE CONTRACTOR IS RESPONSIBLE FOR PROVIDING ALL LABOR AND MATERIALS NECESSARY FOR THE COMPLETION OF THE INTENDED IMPROVEMENTS SHOWN ON THESE DRAWINGS OR DESIGNATED TO BE PROVIDED, INSTALLED, OR CONSTRUCTED, UNLESS SPECIFICALLY NOTED OTHERWISE.

11. THE CONTRACTOR SHALL BE RESPONSIBLE FOR KEEPING ROADWAYS FREE AND CLEAR OF ALL CONSTRUCTION DEBRIS AND DIRT TRACKED FROM THE SITE.

12. THE CONTRACTOR SHALL BE RESPONSIBLE FOR RECORDING AS-BUILT INFORMATION ON A SET OF RECORD DRAWINGS KEPT AT THE CONSTRUCTION SITE, WHICH SHALL BE AVAILABLE TO THE CITY OF COLORADO SPRINGS AT ALL TIMES.

13. THE CONTRACTOR SHALL SEQUENCE THE INSTALLATION OF UTILITIES IN SUCH A MANNER AS TO MINIMIZE POTENTIAL UTILITY CONFLICTS. IN GENERAL, WATERLINES AND SANITARY SEWER SHOULD BE CONSTRUCTED PRIOR TO INSTALLATION OF STORM SEWER AND DRY UTILITIES.

14. NO SITE-RELATED IMPROVEMENTS MAY COMMENCE UNTIL A PRECONSTRUCTION MEETING IS HELD WITH THE CITY OF COLORADO SPRINGS AND ALL APPLICABLE PERMITS ARE OBTAINED.

15. CONTRACTOR IS TO OBTAIN COPIES OF THE SOILS REPORT FROM THE GEOTECHNICAL ENGINEER AND A COPY IS TO BE KEPT ONSITE DURING ALL EARTH WORK OPERATIONS.

16. ALL BACKFILL, SUB-BASE, AND/OR BASE COURSE MATERIAL SHALL BE COMPACTED PER CITY SPECIFICATIONS, AND GEOTECHNICAL ENGINEERS RECOMMENDATIONS.

17. CONCRETE USED IN CURB AND GUTTER, SIDEWALK, AND CROSSPAN CONSTRUCTION SHALL HAVE A MINIMUM COMPRESSIVE STRENGTH OF 4,000 PSI AT 28 DAYS.

18. ALL CURB RETURNS AND 10' EITHER SIDE OF CURB RETURN SHALL BE CITY OF COLORADO SPRINGS TYPE 1 CURB WITH AN ADDITIONAL 10' OF TRANSITION TO CITY OF COLORADO SPRINGS TYPE 5 (WHERE INDICATED). ALL CURB RETURNS SHALL HAVE 15' RADII UNLESS OTHERWISE NOTED.

19. PEDESTRIAN RAMPS SHALL BE INSTALLED AT ALL INTERSECTIONS AND CONFORM TO THE CITY OF COLORADO SPRINGS ENGINEERING DIVISION, STANDARDS AND SPECIFICATIONS.

COLORADO SPRINGS SIGNING AND STRIPING NOTES:

1. INSTALLATION OF ALL STRIPING, SIGNS AND PAVEMENT MARKERS SHALL BE THE RESPONSIBILITY OF THE CONTRACTOR.

2. THE CONTRACTOR SHALL BE RESPONSIBLE FOR ALL REMOVAL OF EXISTING PAVEMENT MARKINGS (SCARRING OF PAVEMENT IS NOT PERMITTED). AT NO TIME WILL IT BE ACCEPTABLE TO PAINT OVER EXISTING PAVEMENT MARKINGS.

3. CONTRACTOR SHALL BE RESPONSIBLE FOR OVERLAYING OR CHIP SEALING ROADWAY, IF SCARRING OCCURS DURING REMOVAL OF EXISTING OR TEMPORARY PAVEMENT MARKINGS.THE CITY TRAFFIC ENGINEER WILL DETERMINE METHOD OF PAVEMENT REPAIR.

4. ALL STRIPING AND SIGNING SHALL CONFORM TO THE MOST RECENT ADOPTED EDITION OF THE FOLLOWING MANUALS AND THEIR SUPPLEMENTAL AMENDMENTS:
   - MANUAL ON UNIFORM TRAFFIC CONTROL DEVICES (MUTCD)
   - CITY OF COLORADO SPRINGS SIGNAGE AND PAVEMENT MARKING GUIDELINES
   - CITY OF COLORADO SPRINGS STANDARD SPECIFICATIONS
   - CITY OF COLORADO SPRINGS PUBLIC WORKS DESIGN MANUAL

5. ALL SIGNING AND STRIPING IS SUBJECT TO THE APPROVAL OF THE CITY TRAFFIC ENGINEER PRIOR TO INSTALLATION AND/OR REMOVAL.

6. CONTRACTOR SHALL REMOVE ALL CONFLICTING STRIPING, PAVEMENT MARKINGS AND LEGENDS BY HYDRO BLASTING, SANDBLASTING AND/OR GRINDING. ANY DEBRIS SHALL BE PROMPTLY REMOVED BY THE CONTRACTOR.

7. SIGN POSTS SHALL BE INSTALLED WITH A MINIMUM OF 1-¾" X 1-¾" X 10' SQUARE PERFORATED STEEL SQUARE TUBING WITH A 2" X 2" X 3' SLEEVE OR A 2" X 2" X 10' SQUARE PERFORATED STEEL SQUARE TUBING PER CITY OF COLORADO SPRINGS STANDARD. STREET NAME SIGNS MEASURING 9" OR TALLER SHALL BE MOUNTED ON A 2" X 2" X 10' SQUARE PERFORATED STEEL TUBING WITH SLEEVE PER CITY OF COLORADO SPRINGS STANDARD.

8. ALL TRAFFIC SIGNS SHALL HAVE A MINIMUM OF HIGH INTENSITY GRADE SHEETING.

9. ALL DEVIATION FROM THE SIGNAGE AND PAVEMENT MARKING PLANS SHALL BE APPROVED BY THE ENGINEER OF WORK AND THE CITY TRAFFIC ENGINEER PRIOR TO ANY CHANGES BEING MADE IN THE FIELD.

10. ALL SIGNS SHOWN ON THE SIGNAGE AND PAVEMENT MARKING PLANS SHALL BE NEW SIGNS PROVIDED AND INSTALLED BY THE CONTRACTOR, EXCEPT FOR EXISTING SIGNS SPECIFICALLY INDICATED TO BE RESET, RELOCATED OR TO REMAIN.

11. STRIPED CROSSWALKS SHALL HAVE AN INSIDE DIMENSION OF 10 FEET AND CONTINENTAL CROSSWALKS SHALL HAVE A MINIMUM LENGTH OF 6 FEET AND MAXIMUM LENGTH OF 10 FEET PER SET REQUIREMENTS UNLESS INDICATED OTHERWISE.

12. ALL LIMIT LINES/STOP LINES, CROSSWALK LINES, PAVEMENT LEGENDS, AND ARROWS (EXCEPT WITHIN BIKE LANES) SHALL BE A MINIMUM OF 90 MIL THICKNESS THERMOPLASTIC OR PERFORM PLASTIC TAPE.

13. ALL LONGITUDINAL LINES SHALL BE A MINIMUM OF 15 MIL THICKNESS EPOXY.

14. CONTRACTOR TO DELIVER ALL REMOVED SIGNS TO THE CITY OF COLORADO SPRINGS SIGNS/MARKING SHOP AT 404 FONTANERO STREET, (719) 385-6721.

15. CONTRACTOR SHALL NOTIFY CITY TRAFFIC ENGINEER AT (719) 385-5908 A MINIMUM OF FIVE (5) WORKING DAYS PRIOR TO AND UPON COMPLETION OF SIGNAGE AND PAVEMENT MARKINGS INSTALLED.

7-24-23

STANDARD NOTES FOR EL PASO COUNTY CONSTRUCTION PLANS:

1. ALL DRAINAGE AND ROADWAY CONSTRUCTION SHALL MEET THE STANDARDS AND SPECIFICATIONS OF THE CITY OF COLORADO SPRINGS/EL PASO COUNTY DRAINAGE CRITERIA MANUAL, VOLUMES 1 AND 2, AND THE EL PASO COUNTY ENGINEERING CRITERIA MANUAL.

2. CONTRACTOR SHALL BE RESPONSIBLE FOR THE NOTIFICATION AND FIELD NOTIFICATION OF ALL EXISTING UTILITIES, WHETHER SHOWN ON THE PLANS OR NOT, BEFORE BEGINNING CONSTRUCTION. LOCATION OF EXISTING UTILITIES SHALL BE VERIFIED BY THE CONTRACTOR PRIOR TO CONSTRUCTION. CALL 811 TO CONTACT THE UTILITY NOTIFICATION CENTER OF COLORADO (UNCC).

3. CONTRACTOR SHALL KEEP A COPY OF THESE APPROVED PLANS, THE GRADING AND EROSION CONTROL PLAN, THE STORMWATER MANAGEMENT PLAN (SWMP), THE SOILS AND GEOTECHNICAL REPORT, AND THE APPROPRIATE DESIGN AND CONSTRUCTION STANDARDS AND SPECIFICATIONS AT THE JOB SITE AT ALL TIMES, INCLUDING THE FOLLOWING:
   a. EL PASO COUNTY ENGINEERING CRITERIA MANUAL (ECM)
   b. CITY OF COLORADO SPRINGS/EL PASO COUNTY DRAINAGE CRITERIA MANUAL, VOLUMES 1 AND 2
   c. COLORADO DEPARTMENT OF TRANSPORTATION (CDOT) STANDARD SPECIFICATIONS FOR ROAD AND BRIDGE CONSTRUCTION
   d. CDOT M & S STANDARDS

4. NOTWITHSTANDING ANYTHING DEPICTED IN THESE PLANS IN WORDS OR GRAPHIC REPRESENTATION, ALL DESIGN AND CONSTRUCTION RELATED TO ROADS, STORM DRAINAGE AND EROSION CONTROL SHALL CONFORM TO THE STANDARDS AND REQUIREMENTS OF THE MOST RECENT VERSION OF THE RELEVANT ADOPTED EL PASO COUNTY STANDARDS, INCLUDING THE LAND DEVELOPMENT CODE, THE ENGINEERING CRITERIA MANUAL, THE DRAINAGE CRITERIA MANUAL, AND THE DRAINAGE CRITERIA MANUAL VOLUME 2. ANY DEVIATIONS FROM REGULATIONS AND STANDARDS MUST BE REQUESTED, AND APPROVED, IN WRITING. ANY MODIFICATIONS NECESSARY TO MEET CRITERIA AFTER-THE-FACT WILL BE ENTIRELY THE DEVELOPER'S RESPONSIBILITY TO RECTIFY.

5. IT IS THE DESIGN ENGINEER'S RESPONSIBILITY TO ACCURATELY SHOW EXISTING CONDITIONS, BOTH ONSITE AND OFFSITE, ON THE CONSTRUCTION PLANS. ANY MODIFICATIONS NECESSARY DUE TO CONFLICTS, OMISSIONS, OR CHANGED CONDITIONS WILL BE ENTIRELY THE DEVELOPER'S RESPONSIBILITY TO RECTIFY.

6. CONTRACTOR SHALL SCHEDULE A PRE-CONSTRUCTION MEETING WITH EL PASO COUNTY PCD INSPECTIONS, PRIOR TO STARTING CONSTRUCTION.

7. IT IS THE CONTRACTOR'S RESPONSIBILITY TO UNDERSTAND THE REQUIREMENTS OF ALL JURISDICTIONAL AGENCIES AND TO OBTAIN ALL REQUIRED PERMITS, INCLUDING BUT NOT LIMITED TO EL PASO COUNTY EROSION AND STORMWATER QUALITY CONTROL PERMIT (ESQCP), REGIONAL BUILDING FLOODPLAIN DEVELOPMENT PERMIT, U.S. ARMY CORPS OF ENGINEERS-ISSUED 401 AND/OR 404 PERMITS, AND COUNTY AND STATE FUGITIVE DUST PERMITS.

8. CONTRACTOR SHALL NOT DEVIATE FROM THE PLANS WITHOUT FIRST OBTAINING WRITTEN APPROVAL FROM THE DESIGN ENGINEER AND PCD. CONTRACTOR SHALL NOTIFY THE DESIGN ENGINEER IMMEDIATELY UPON DISCOVERY OF ANY ERRORS OR INCONSISTENCIES.

9. ALL STORM DRAIN PIPE SHALL BE CLASS III RCP UNLESS OTHERWISE NOTED AND APPROVED BY PCD.

10. CONTRACTOR SHALL COORDINATE GEOTECHNICAL TESTING PER ECM STANDARDS. PAVEMENT DESIGN SHALL BE APPROVED BY EL PASO COUNTY PCD PRIOR TO PLACEMENT OF CURB AND GUTTER AND PAVEMENT.

11. ALL CONSTRUCTION TRAFFIC MUST ENTER/EXIT THE SITE AT APPROVED CONSTRUCTION ACCESS POINTS.

12. SIGHT VISIBILITY TRIANGLES AS IDENTIFIED IN THE PLANS SHALL BE PROVIDED AT ALL INTERSECTIONS. OBSTRUCTIONS GREATER THAN 18 INCHES ABOVE FLOWLINE ARE NOT ALLOWED WITHIN SIGHT TRIANGLES.

13. SIGNING AND STRIPING SHALL COMPLY WITH EL PASO COUNTY PCD AND MUTCD CRITERIA. [IF APPLICABLE, ADDITIONAL SIGNING AND STRIPING NOTES WILL BE PROVIDED.]

14. CONTRACTOR SHALL OBTAIN ANY PERMITS REQUIRED BY EL PASO COUNTY PCD, INCLUDING WORK WITHIN THE RIGHT-OF-WAY AND SPECIAL TRANSPORT PERMITS.

15. THE LIMITS OF CONSTRUCTION SHALL REMAIN WITHIN THE PROPERTY LINE UNLESS OTHERWISE NOTED. THE OWNER/DEVELOPER SHALL OBTAIN WRITTEN PERMISSION AND EASEMENTS, WHERE REQUIRED, FROM ADJOINING PROPERTY OWNER(S) PRIOR TO ANY OFF-SITE DISTURBANCE, GRADING, OR CONSTRUCTION.

GENERAL CONSTRUCTION NOTES:

1. IT SHALL BE THE RESPONSIBILITY OF THE CONTRACTOR TO VERIFY THE EXISTENCE AND LOCATION OF ALL UNDERGROUND UTILITIES ALONG THE ROUTE OF THE WORK. THE OMISSION FROM OR THE INCLUSION OF UTILITY LOCATIONS ON THE PLANS IS NOT TO BE CONSIDERED AS THE NONEXISTENCE OF OR A DEFINITE LOCATION OF EXISTING UNDERGROUND UTILITIES.

2. THE CONTRACTOR WILL TAKE THE NECESSARY PRECAUTIONS TO PROTECT EXISTING UTILITIES FROM DAMAGE DUE TO THIS OPERATION. ANY DAMAGE TO THE UTILITIES WILL BE REPAIRED AT THE CONTRACTOR'S EXPENSE, AND ANY SERVICE DISRUPTION WILL BE SETTLED BY THE CONTRACTOR.

3. ADDITIONAL EROSION CONTROL STRUCTURES MAY BE REQUIRED AT THE TIME OF CONSTRUCTION.

4. ALL BACKFILL, SUB-BASE, AND/OR BASE COURSE (CLASS 6) MATERIAL SHALL BE COMPACTED PER THE SOILS ENGINEER'S RECOMMENDATIONS, AND APPROVED BY EL PASO COUNTY PCD.

5. ALL STATIONING IS CENTERLINE OF IMPROVEMENTS UNLESS OTHERWISE INDICATED. ALL ELEVATIONS ARE FLOW LINE UNLESS OTHERWISE INDICATED AS TOP BACK OF CURB (TBC), ASPHALT (ASP), OR TOP OF INLET OR BOX (TOB).

6. ALL DISTURBED PAVEMENT EDGES SHALL BE CUT TO NEAT LINES. REPAIR SHALL CONFORM TO EPC ECM APPENDIX K - 1.2C.

7. ALL INTERSECTION ACCESSES TO BE CONSTRUCTED WITH A 25 FOOT SIGHT VISIBILITY TRIANGLES EXCEPT [VOLLMER ROAD, MARKSHEFFEL ROAD, BRAIRGATE PARKWAY] WHICH IS AN ARTERIAL AND A 50 FOOT SIGHT VISIBILITY TRIANGLE IS REQUIRED AND THERE SHALL BE NO OBSTRUCTIONS GREATER THAN 18" IN THIS AREA.

8. ALL CULVERTS AND STORM DRAIN PIPES SHALL BE SMOOTH INTERIOR CORRUGATED POLYETHYLENE PIPE (HDPE), REINFORCED CONCRETE PIPE (RCP). ALL CULVERTS SHALL BE PLACED COMPLETE WITH FLARED END SECTIONS. ADEQUACY OF MATERIAL THICKNESS FOR ANY CSP INSTALLED SHALL BE VERIFIED BY OWNER'S GEOTECHNICAL ENGINEER TO SUPPORT MINIMUM 50 YEAR DESIGN LIFE. CULVERTS MUST CONFORM TO EPC ECM SECTION 3.32 - CULVERTS.

9. ASPHALT THICKNESS AND BASE COURSE THICKNESS (COMPACTED) FOR ROADS SHALL BE PER DESIGN REPORT BY OWNER'S GEOTECHNICAL ENGINEER. OWNER'S GEOTECHNICAL ENGINEER TO BE ON SITE AT THE TIME OF ROAD CONSTRUCTION TO EVALUATE SOIL CONDITIONS AND DETERMINE IF ADDITIONAL MEASURES ARE NECESSARY TO ASSURE STABILITY OF THE NEW ROADS. PAVEMENT DESIGN SHALL BE APPROVED BY EL PASO COUNTY PLANNING AND COMMUNITY DEVELOPMENT ENGINEERING DIVISION AND THE CITY OF COS PRIOR TO CONSTRUCTION.

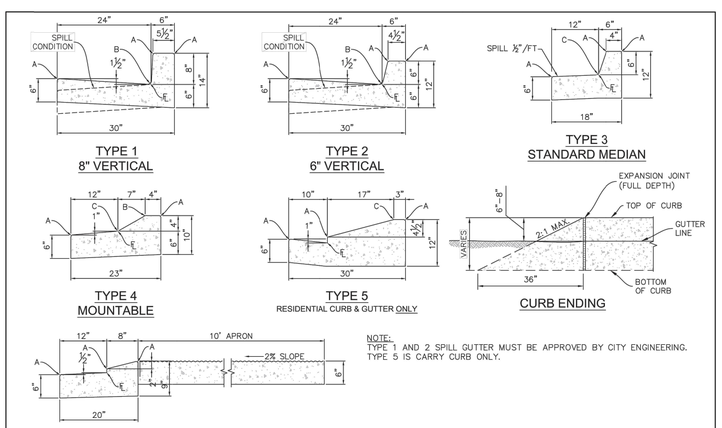

NOTE:
TYPE 1 AND 2 SPILL GUTTER MUST BE APPROVED BY CITY ENGINEERING.
TYPE 5 IS CARRY CURB ONLY.

RADII LEGEND	
A	¼"-½"
B	1½"
C	1½"-2"

COLORADO SPRINGS

CURB & GUTTER DETAILS
APPROVED: Gayle Sturdivant
CITY ENGINEER
ISSUED: 2/28/20 REVISED: DRAWING NO. 6B

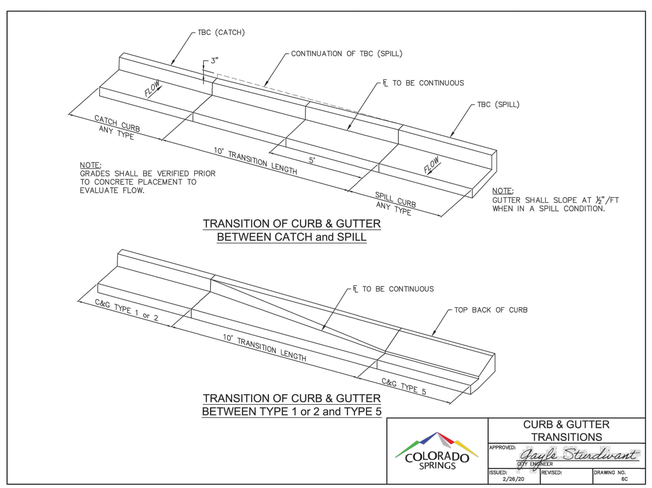

COLORADO SPRINGS

CURB & GUTTER TRANSITIONS
APPROVED: Gayle Sturdivant
CITY ENGINEER
ISSUED: 2/28/20 REVISED: DRAWING NO. 6C

Know what's **below.**
Call before you dig.

ENGINEER'S STATEMENT

STANDARD NOTES AND DETAILS SHOWN WERE REVIEWED ONLY AS TO THEIR APPLICATION ON THIS PROJECT.

MIKE A. BRAMLETT, P.E.
COLORADO P.E. 32314
FOR AND ON BEHALF OF JR ENGINEERING, LLC

32314 7/17/23
DATE

UNTIL SUCH TIME AS THESE DRAWINGS ARE APPROVED BY THE APPROPRIATE REVIEWING AGENCIES, JR ENGINEERING APPROVES THEIR USE ONLY FOR THE PURPOSES DESIGNATED BY WRITTEN AUTHORIZATION.

PREPARED FOR
SR LAND, LLC
20 BOULDER CRESCENT
SUITE 201
COLORADO SPRINGS, CO 80903
JAMES F. MORLEY
(719) 471-1742

J·R ENGINEERING
A Westrian Company
Centennial 303-740-9393 • Colorado Springs 719-593-2593
Fort Collins 970-491-9888 • www.jrengineering.com

No.	REVISION	BY	DATE

H-SCALE	N/A
V-SCALE	N/A
DATE	7/17/23
DESIGNED BY	N/A
DRAWN BY	CWC
CHECKED BY	

MARKSHEFFEL ROAD (SEGMENT M2)
NOTES AND DETAILS

SHEET 2 OF 5
JOB NO. 25188.11

X:\2510000.all\2518811\Drawings\Sheet Dwgs\Marksheffel (South)\GN01-Marksheffel South.dwg, GN01, 7/17/2023 8:33:15 AM, JRE Remote

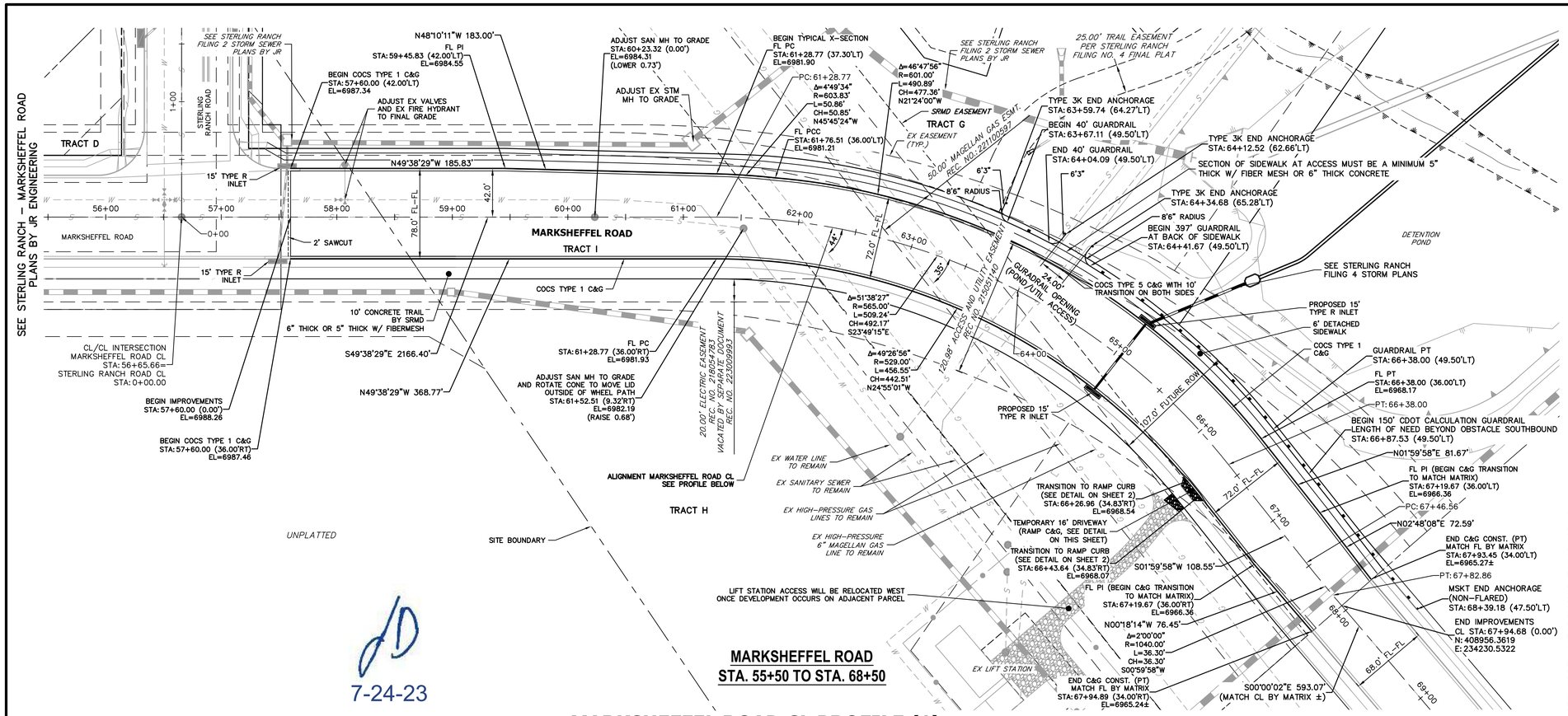

7-24-23

MARKSHEFFEL ROAD
STA. 55+50 TO STA. 68+50

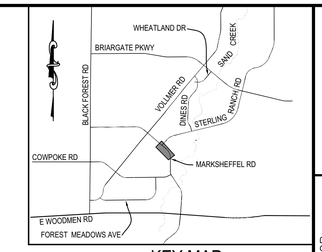

KEY MAP
N.T.S.

NOTES

1. STORM SEWER TO BE CONSTRUCTED PRIOR TO ROADWAY IMPROVEMENTS
2. GUARDRAIL TO BE CONSTRUCTED ACCORDING TO CDOT STANDARD PLAN M-606-1
3. CONTRACTOR TO CONFIRM HYDRANT PLACEMENT IS >2' FROM BACK OF CURB OR MAKE NECESSARY ADJUSTMENT.

811 Know what's below. Call before you dig.

50 25 0 50 100
HORIZONTAL
ORIGINAL SCALE: 1" = 50'
VERTICAL
ORIGINAL SCALE: 1" = 5'

UNTIL SUCH TIME AS THESE DRAWINGS ARE APPROVED BY THE APPROPRIATE REVIEWING AGENCIES, JR ENGINEERING APPROVES THEIR USE ONLY FOR THE PURPOSES DESIGNATED BY WRITTEN AUTHORIZATION.

PREPARED FOR
SR LAND, LLC
20 BOULDER CRESCENT
SUITE 201
COLORADO SPRINGS, CO 80903
JAMES F. MORLEY
(719) 471-1742

J·R ENGINEERING
A Westrian Company
Centennial 303-740-9393 • Colorado Springs 719-593-2593
Fort Collins 970-491-9888 • www.jrengineering.com

No.	REVISION	BY	DATE

MARKSHEFFEL ROAD CL PROFILE (1)
STA 56+00.00 TO 68+25.00

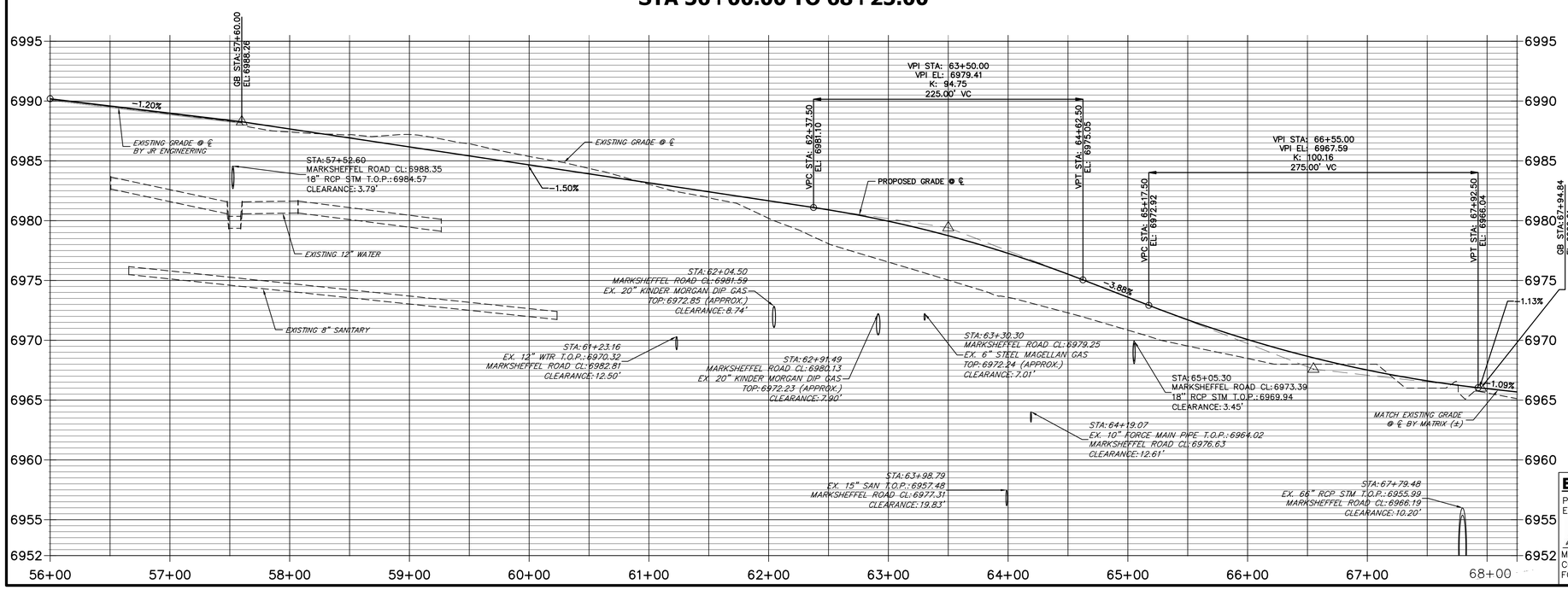

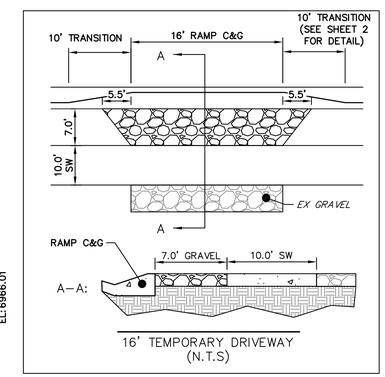

16' TEMPORARY DRIVEWAY
(N.T.S)

WARNING
HIGH-PRESSURE PIPELINE(S)
EXCAVATION AND/OR CONSTRUCTION PROHIBITED WITHOUT COMPLIANCE WITH STATE ONE-CALL, AND WITHOUT WRITTEN PERMISSION FROM
MAGELLAN PIPELINE COMPANY, L.P.

ENGINEER'S STATEMENT

PREPARED UNDER MY DIRECT SUPERVISION AND ON BEHALF OF JR ENGINEERING

Mike Bramlett 7/17/23

MIKE A. BRAMLETT, P.E.
COLORADO P.E. 32314
FOR AND ON BEHALF OF JR ENGINEERING, LLC

COLORADO REGISTERED PROFESSIONAL ENGINEER MIKE A. BRAMLETT 32314

DATE

H-SCALE	1"=50'
V-SCALE	1"=5'
DATE	7/17/23
DESIGNED BY	RAB
DRAWN BY	CWC
CHECKED BY	

MARKSHEFFEL ROAD (SEGMENT M2)
ROADWAY PLAN & PROFILE

SHEET 3 OF 5

JOB NO. 25188.11

X:\2510000.all\2518811\Drawings\Sheet Dwgs\Marksheffel (South)\SS01-Marksheffel South.dwg, SS01, 7/17/2023 8:33:22 AM, JRE Remote

NOTE:

STERLING RANCH METRO DISTRICT AND/OR PROPERTY OWNER TO COORDINATE AND ENGAGE WITH COLORADO SPRINGS UTILITIES (STREET LIGHT PROGRAM DESIGN) AND MOUNTAIN VIEW ELECTRIC (ELECTRIC SERVICE PROVIDER) TO ADHERE TO CSU AND CITY CRITERIA REGARDING ARTERIAL ROADWAY ILLUMINATION. PLEASE NOTE, ADDITIONAL STREET LIGHTING ABOVE STANDARD CRITERIA WILL BE REQUIRED ON BOTH SIDES OF THE CURVED ROADWAY SECTION TO IMPROVE DRIVER AWARENESS. STREET LIGHTS ARE TO BE INSTALLED BY THE STERLING RANCH METRO DISTRICT OR PROPERTY OWNER AND OPERATIONAL PRIOR RO PRELIMINARY ACCEPTANCE OF THE IMPROVEMENTS BY CITY OF COLORADO SPRINGS.

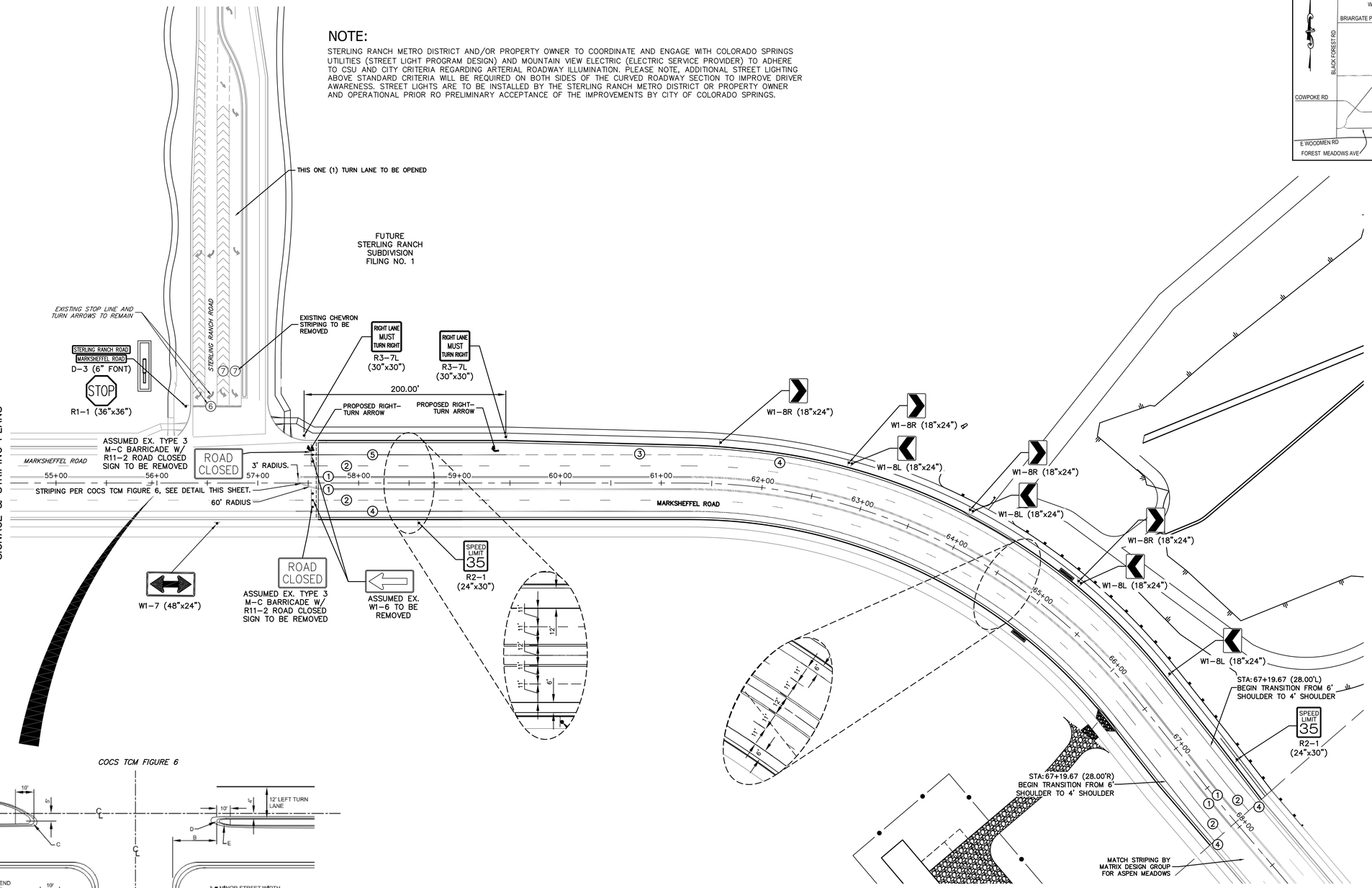

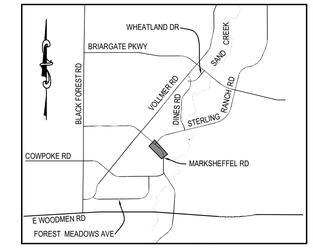

KEY MAP
N.T.S.

COCS TCM FIGURE 6

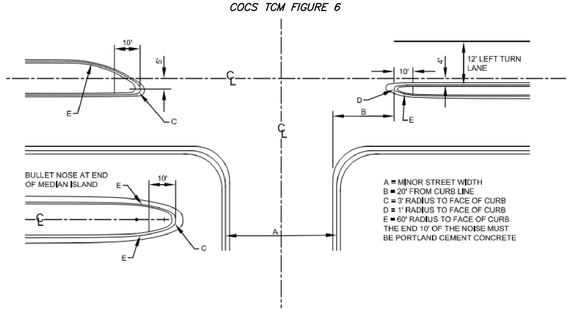

MARKSHEFFEL ROAD
STA. 54+50 TO STA. 68+50

STRIPING LEGEND		
STRIPE	PAVEMENT MARKINGS	MARKING DESCRIPTION
1	2-WAY CENTERLINE LANE MARKINGS (EPOXY)	PARALLEL SOLID YELLOW, 4" WIDE, 12" APART
2	LANE LANES (EPOXY)	BROKEN WHITE, 4" WIDE, 10' SEGMENTS WITH 30' GAPS
3	BROKEN EDGE LINES (EPOXY)	BROKEN WHITE, 4" WIDE, 3' SEGMENTS WITH 12" GAPS
4	EDGE LANE LINES (EPOXY)	SOLID WHITE, 4" WIDE
5	CHANNELIZING LINES (EPOXY)	SOLID WHITE, 8" WIDE
6	STOP LINES (THERMO PLASTIC)	SOLID WHITE, 24" WIDE
7	CHEVRON/DIAGONAL CROSSHATCH	SOLID WHITE, 12" WIDE

NOTE: ALL STRIPING INSTALLATION SHALL BE PER COLORADO DEPARTMENT OF TRANSPORTATION (CDOT) "M&S STANDARDS" STANDARD PLAN NO. S-627-1.

7-24-23

50 25 0 50 100
ORIGINAL SCALE: 1" = 50'

NOTE TO CONTRACTOR:

1. ALL 4" AND 8" SOLID OR SKIP PAVEMENT MARKINGS ARE TO BE EPOXY.
2. SIGNS AND POLES SHALL BE PER CDOT STANDARDS S-614-8, S-1614-2, AND S-614-3, LATEST REVISION.
3. ALL SIGNAGE INSTALLATION IS TO BE IN COMPLIANCE WITH THE MANUAL ON UNIFORM TRAFFIC CONTROL DEVICES (MUTCD).

ENGINEER'S STATEMENT

PREPARED UNDER MY DIRECT SUPERVISION AND ON BEHALF OF JR ENGINEERING

MIKE A. BRAMLETT, P.E.
COLORADO P.E. 32314
FOR AND ON BEHALF OF JR ENGINEERING, LLC

DATE 7/17/23

COLORADO REGISTERED PROFESSIONAL ENGINEER MIKE A. BRAMLETT 32314

Know what's below. Call before you dig.

UNTIL SUCH TIME AS THESE DRAWINGS ARE APPROVED BY THE APPROPRIATE REVIEWING AGENCIES, JR ENGINEERING APPROVES THEIR USE ONLY FOR THE PURPOSES DESIGNATED BY WRITTEN AUTHORIZATION.

PREPARED FOR
SR LAND, LLC
20 BOULDER CRESCENT
SUITE 201
COLORADO SPRINGS, CO 80903
JAMES F. MORLEY
(719) 471-1742

J·R ENGINEERING
A Westrian Company
Centennial 303-740-9393 • Colorado Springs 719-593-2593
Fort Collins 970-491-9888 • www.jrengineering.com

No.	REVISION	BY	DATE

H-SCALE	1"=50'
V-SCALE	N/A
DATE	7/17/23
DESIGNED BY	RAB
DRAWN BY	CWC
CHECKED BY	

MARKSHEFFEL ROAD (SEGMENT M2)
SIGNAGE & STRIPING

SHEET 4 OF 5
JOB NO. 25188.11

X:\2518000.all\2518811\Drawings\Sheet Dwgs\Marksheffel (South)\SG01-Marksheffel South.dwg, SG01, 7/17/2023 10:10:24 AM, CS

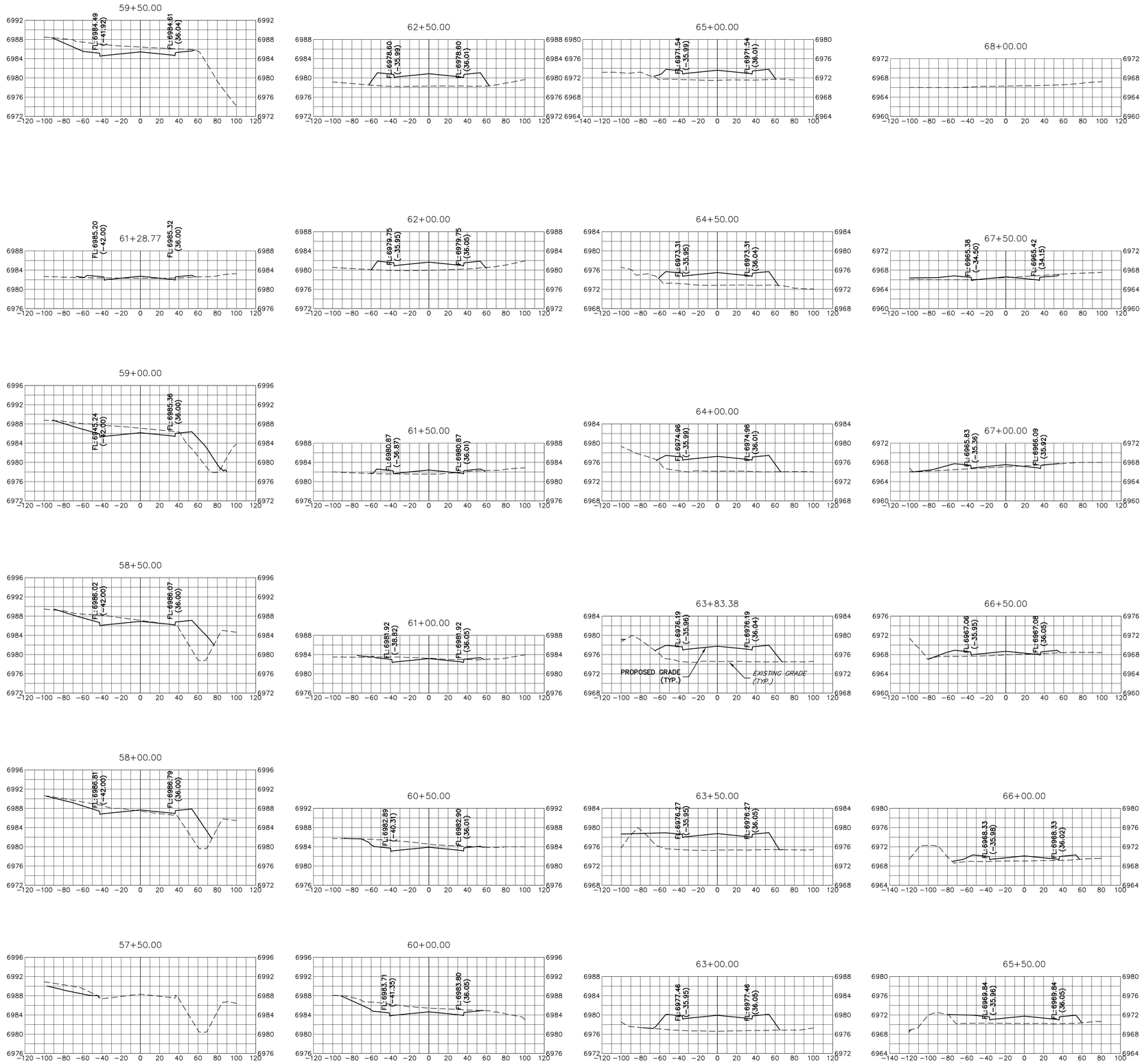

MARKSHEFFEL ROAD
STA. 57+50 TO STA. 68+00

7-24-23

ENGINEER'S STATEMENT

PREPARED UNDER MY DIRECT SUPERVISION AND ON BEHALF OF JR ENGINEERING

MIKE A. BRAMLETT, P.E.
COLORADO P.E. 32314
FOR AND ON BEHALF OF JR ENGINEERING, LLC

32314 DATE 7/17/23

UNTIL SUCH TIME AS THESE DRAWINGS ARE APPROVED BY THE APPROPRIATE REVIEWING AGENCIES, JR ENGINEERING APPROVES THEIR USE ONLY FOR THE PURPOSES DESIGNATED BY WRITTEN AUTHORIZATION.

PREPARED FOR
SR LAND, LLC
20 BOULDER CRESCENT
SUITE 201
COLORADO SPRINGS, CO 80903
JAMES F. MORLEY
(719) 471-1742

J·R ENGINEERING
A Westrian Company
Centennial 303-740-9393 • Colorado Springs 719-593-2593
Fort Collins 970-491-9888 • www.jrengineering.com

No.	REVISION	BY	DATE

H-SCALE	1"=50'
V-SCALE	1"=10'
DATE	7/17/23
DESIGNED BY	CWC
DRAWN BY	SWW
CHECKED BY	

MARKSHEFFEL ROAD
(SEGMENT M2)
CROSS-SECTIONS

SHEET 5 OF 5

JOB NO. 25188.11

X:\2510000 all\2518811\Drawings\Sheet Dwgs\Marksheffel (South)\X501-Marksheffel South.dwg, X501, 7/17/2023 8:35:47 AM, JRE Remote