INNOVATIVE DESIGN. **CLASSIC RESULTS.**

PRELIMINARY/FINAL DRAINAGE REPORT
FOR
JOHNSON ESTATES FILING NO. 1

Remove "Preliminary" from the title.

DECEMBER 2020

REVISED

CCES RESPONSES

Prepared for:
DELROY JOHNSON
14502 HIGHWAY 83
COLORADO SPRINGS, CO 80921

Prepared by:
CLASSIC CONSULTING
619 N. CASCADE AVE., SUITE 200
COLORADO SPRINGS, CO 80903
(719) 785-0790

REVISED

Please update PCD File No. to "MS211."

Job no. 2575.00

PCD Project No. SF-20-xxx

PRELIMINARY/FINAL DRAINAGE REPORT FOR
JOHNSON ESTATES FILING NO. 1

DESIGN ENGINEER'S STATEMENT:
The attached drainage plan and report were prepared under my direction and supervision and are correct to the best of my knowledge and belief. Said drainage report has been prepared according to the criteria established by the County for drainage report and said report is in conformity with the applicable master plan and drainage basin. I accept responsibility for any liability caused by any negligent acts, errors, or omissions on my part in preparing this report.

_____ _____
Marc A. Whorton, Colorado P.E. #37155 Date

OWNERS/DEVELOPER'S STATEMENT:
I, the owner/developer, have read and will comply with all of the requirements specified in this drainage report and plan.

Name: Delroy Johnson

Title:

Address: 14502 Highway 83

Colorado Springs, CO 80921

EL PASO COUNTY:
Filed in accordance with the requirements of the Drainage Criteria Manual, Volumes 1 and 2, El Paso County Engineering Criteria Manual and Land Development Code, as amended.

_____ _____
Jennifer Irvine, P.E. Date
County Engineer / ECM Administrator

Conditions:

CLASSIC CONSULTING ENGINEERS & SURVEYORS

PRELIMINARY/FINAL DRAINAGE REPORT FOR
JOHNSON ESTATES FILING NO. 1

TABLE OF CONTENTS:

APPENDICES

CLASSIC CONSULTING ENGINEERS & SURVEYORS

PRELIMINARY\FINAL DRAINAGE REPORT FOR JOHNSON ESTATES FILING NO. 1

Please remove "preliminary" from the report contents.

REVISED

PURPOSE

This document is the Preliminary/Final Drainage Report for Johnson Estates Filing No. 1. The purpose of this report is to address on-site and off-site drainage patterns and improvements required for this Minor Subdivision to minimize impacts to the adjacent properties.

GENERAL DESCRIPTION

The total acreage for the site is 28.653 acres and is located in the county of El Paso within Section 34, Township 11 South, Range 66 West of the Sixth Principal Meridian, El Paso County, Colorado. The site is bounded on the north, west and south by existing platted and unplatted residential properties (RR-5 Zone) and to the east by existing Highway 83. The overall site is proposed for 4 single-family 5-acre minimum lots with a single driveway access from Highway 83. The current zoning of the property is RR-5 (5-acre Residential Zoning). Current access to and from the property exists in the single paved driveway access to Highway 83.

The average soil condition reflects Hydrologic Group "B" (Kettle gravely loamy sand), as determined by the "Soil Survey of El Paso County Area," pr

Update narrative to discuss whether Black Squirrel Creek has a DBPS. Also determine if there are any public improvements the study identifies within the vicinity or in the property.

EXISTING DRAINAGE CONDITIONS

ADDED NARRATIVE RE: DBPS

This property lies within the upper reach of the Black Squirrel Creek Drainage Basin. The existing drainage patterns generally run in a southeasterly directio ge corridors at slopes ranging from 2% to 20%. There are several high poi creating these natural corridors, one of which is where the property owners current house is located. The majority of the western portion of the property drains into two natural corridors that have some of-site flows from the adjacent rural residential subdivision. These corridors then exit the property along the south boundary. The central portion of the property contains the owner's house along with a paved driveway out to Highway 83. This driveway crosses over a natural drainageway where an existing 18"

CLASSIC CONSULTING ENGINEERS & SURVEYORS

culvert conveys flows to the southeast side of the driveway and ultimately towards Highway 83. A significant off-site basin to the north drains through the property and towards Highway 83 at the northeast corner. These predeveloped flows will continue to travel in this pattern with no development proposed in this sub-basin and no signs of erosion or sediment transfer on-site. The majority of the property is heavily forested. However, over the past several years, the property owner has provided fire mitigation and thinned out the dense tree areas. The debris from this effort has already been hauled off or chipped up on-site. A healthy layer of pine needles exist on the ground across the majority of the forested area. The small area of the property adjacent to Highway 83 at the northeast corner is covered with native grasses with only sparse evergreen trees. As mentioned earlier, several structures currently exist on the property including the owners home and several out buildings (garage and sheds) and a cleared level area previously used as an informal ice rink.

Design Point H1 (Q_5 = 6 cfs and Q_{100} = 41 cfs) consists of pre-development flows at the western edge of the property from off-site basins OS-1 and OS-2 along with on-site basins EX-1 and EX-2. These historic flows travel in a southwesterly direction within two well defined natural drainageways towards the south boundary and then head off-site.

Design Point H2 (Q_5 = 1.2 cfs and Q_{100} = 8 cfs) consists of pre-development flows from Basin EX-3 within the middle portion of the site. These historic flows travel in a southerly direction within a natural drainageway towards the south boundary.

Design Point H3 (Q_5 = 0.2 cfs and Q_{100} = 1.1 cfs) consists of pre-development flows from Basin EX-4. These historic flows sheet flow in a southerly direction towards the south boundary. No development proposed within this basin.

Design Point H4 (Q_5 = 0.8 cfs and Q_{100} = 5 cfs) consists of pre-development flows from Basin EX-7. These historic flows sheet flow in a southerly direction towards the south boundary. No development proposed within this basin.

Design Point H5 (Q_5 = 2 cfs and Q_{100} = 11 cfs) consists of pre-development flows from Basins EX-5 and EX-8. These historic flows travel in a southeasterly, crossing the existing driveway within an existing 18" culvert and then towards Highway 83.

Design Point H6 (Q_5 = 18 cfs and Q_{100} = 124 cfs) consists of pre-development flows from on-site Basin EX-6 and the significant off-site Basin OS-3. These off-site historic flows (rural, forested residential land- use) travel in a southeasterly direction and enter the site, along the north boundary. These flows continue to sheet flow across the site at the northeast corner towards Highway 83. No development is proposed within this on-site basin and no evidence of erosion or sediment transfer exists on-site. These pre-development flows will continue to travel in this historic pattern.

Please update narratives to identify any drainage ways in the basins. Per the soils and geology report, drainage ways should be avoided when developing the lots. Please provide dimensions of drainage ways that will be identified as drainage easements, per ECM 3.3.4.A.

Elaborate on the historic pattern. The drainage map appears to show this overtopping highway 83. To what extents and depth?

Coordinate with CDOT for their requirements and update the narrative for design point D6 to summarize the results of the CDOT coordination.

ONDITIONS

lots planned off of the proposed driveway extension to the west. This will
veway access to the multiple pro ndix
Access Permit) Three waivers 2020
rty as follows: (See Appendix for

DRAINAGEWAYS NOW CLEARLY SHOWN WITHIN ESMTS. ON MAP AND FINAL PLAT AND PROPOSED UNITS PLANNED OUTSIDE OF THESE AREAS.

ADDED ADDTIONAL DESC. TO NARRATIVE RE: EXIST. CONDITION.

COORD. WITH CDOT ALREADY TAKEN PLACE WITH APPROVAL OF REVISED ACCESS PERMIT FOR ADDITIONAL LOTS AND NO DRAINAGE ISSUES RAISED.

er for private road (per definition, a driveway cannot serve more than 3 lots
8.4.4.E.2) Proposing 4 lots

er for private roads to meet County standards (LDC 8.4.4.E.3) Proposing
te road design criteria similar to driveway criteria

mum lot frontage (8.4.3.C.2.E) Not all lots will have direct frontage to
way 83 based on shape of property and limited access allowed to Highway

The attached developed conditions drainage map contains several design points related to the proposed paved driveway extension and associated minor BMP facilities. Driveway culverts planned have been designed for the 100-yr. developed flows. All these facilities will be private with ownership and maintenance per the proposed covenants established with the Final Plat. (All lot owners are

CLASSIC CONSULTING ENGINEERS & SURVEYORS

responsible for their fair share of the maintenance associated with the paved driveway and associated BMP facilities. Individual lot owners are responsible for the driveway culverts within their property.)

Design Point D1 (Q_5 = 7 cfs and Q_{100} = 41 cfs) consists of developed flows from off-site Basins OS-1 and OS-2 and on-site basins A, B1 and B2. These developed flows continue to travel in a southeasterly direction within a natural drainageway n head off-site. Two proposed homesites with associated p l are proposed within these basins. Due to the large fores duction of impervious improvements on the 5 ac. lots, there is no significant increase from the pre-developed flows (Q_5 = 6 cfs and Q_{100} = 41 cfs). Per ECM I.7.1.B, WQCV is not required for this type of development. However, a permanent sediment basin is proposed within Lot 3, just west of the fire turn-around to handle sediment control for the proposed driveway improvements and help mitigate the developed flows. The following are the parameters for this facility:

SEE REVISED REPORT. IT IS SHOWN THAT THIS DEVELOPMENT DOES NOT REQUIRE WQCV FOR LOTS OR DRIVEWAY (UNDER 1.0 AC.)

Please see notes on PBMP form. Paved roadway area is not excluded and will need permanent WQ control measure. If runoff reduction selected as PWQ method, see DCM Vol 2, Chap 4.4 and also show a map similar to this example that delineates areas related to the runoff reduction calcs:

Sediment Basi

Design criteria a Manual Vol. 3 (SC-7)

Undeveloped t f B2) 1.52 ac

Disturbed area 0.08 ac

SEE REVISED REPORT AND RUNOFF REDUCTION SPREADSHEET NOW INCLUDED AND AREAS SHOWN ON MAP PER EXAMPLE.

This does not have to be a separate map. This could be added to the Drainage Map shown on the last page of this document.

Basin Storage Volume Required:	1.52 ac. X 500 cu. ft.	=	760 cu. ft.
	0.08 ac. X 3,600 cu. ft.	=	288 cu. ft.
		=	**1,048 cu. ft.**

Spillway Crest Length: 3.0'

Hole Diameter: 13/

Basin Outlet: 6"

ESMTS. NOW SHOWN ON MAP AND FINAL PLAT.

Please update drainage map to show all proposed drainage easements for drainage ways and sediment basins.

This facility will be constructed within a drainage easement with ownership by the property owner and maintenance as directed by the covenants described on the Final Plat. The O&M Plan for this project will further specify maintenance responsibi

O&M REPORT NOT NEEDED NOW THAT NO PERMANENT SWQ FACILITIES PROPOSED

Please submit an O&M Plan for this application.

CLASSIC CONSULTING ENGINEERS & SURVEYORS

Please provide detail for dissipators in construction drawings.

SEE REVISED.
DETAILS NOW PROVIDED

The anticipated dri[illegible]atural drainage corridor. Dual 18" culverts with 4'x10' Type VL rip-rap dissipaters are designed at each driveway crossing. See Appendix for culvert and rip-rap calculations. However, the property owners of these lots may provide an alternative low water "texas crossing" and assume risk of flooding over the driveway.

Design Point D2 (Q_5 = 1.3 cfs and Q_{100} = 8 cfs) consists of developed flows from Basins C and D. These on-site developed flows travel in a southerly direction within a natural drainageway towards the south boundary and then off-site. Due to the minimal introduction of impervious improvements within this tributary area and no development proposed in Basin C, there is no significant increase from the pre-developed flows (Q_5 = 1.2 cfs and Q_{100} = 8 cfs). Per ECM I.7.1.B, WQCV is not required for this type of development. The driveway in this area is planned to have a 2% cross slope to the north, thus creating a low point just north of the driveway. A 12" PVC culvert will be installed under the driveway to handle the minimal developed flow from Basin D. A permanent rock check dam will be installed downstream of this outfall to help mitigate any sediment loads from the proposed driveway extension.

Design Point D3 (Q_5 = 0.2 cfs and Q_{100} = 1.1 cfs) consists of developed flows from Basin E. These on-site developed flows continue to sheet flow towards the south boundary. No development is proposed within this Basin and thus, there is no significant change from the pre-developed flows of (Q_5 = 0.2 cfs and Q_{100} = 1.1 cfs).

Design Point D4 (Q_5 = 0.8 cfs and Q_{100} = 5 cfs) consists of developed flows from Basin H. These on-site developed flows continue to sheet flow towards the south boundary. No development is proposed within this Basin and thus, there is no significant change from the pre-developed flows of (Q_5 = 0.8 cfs and Q_{100} = 5 cfs).

Design Point D5 (Q_5 = 2 cfs and Q_{100} = 9 cfs) consists of developed flows from Basins F and I. These on-site developed flows continue to travel in a southeasterly direction within a natural drainage corridor towards Highway 83. With the reduction in tributary area due to the extension of the driveway, the

developed flows at this location are at or below the pre-development conditions. Therefore, no further improvements within this basin are proposed at this time, other than a proposed permanent sediment basin within Basin F situated between the two driveways. The driveway in this area is planned to have a 2% cross slope to the south, thus sheet flowing into the natural drainage corridor towards the existing 18" driveway culvert. This sediment basin m will provide sediment control for the easterly portion of the proposed driveway extension. The following are the parameters for this facility:

Sediment Basin (Lot 1)

Design criteria per Urban Storm Drainage Criteria Manual Vol. 3 (SC-7)

Undeveloped tributary acreage (Basin F)	2.1 ac.		
Disturbed area (Portion of Basin B)	0.5 ac.		
Basin Storage Volume Required:	2.1 ac. X 500 cu. ft.	=	1,050 cu. ft.
	0.5 ac. X 3,600 cu. ft.	=	1,800 cu. ft.
		=	**2,850 cu. ft.**
Spillway Crest Length:	5.0'		
Hole Diameter:	1/2 in.		
Basin Outlet:	6" PVC Riser pipe and outfall		

This facility will be constructed within a drainage easement with ownership by the property owner and maintenance as directed by the covenants described on the Final Plat. The O&M Plan for this project will further specify maintenance responsibilities for this facility.

Design Point D6 (Q_5 = 18 cfs and Q_{100} = 124 cfs) consists of developed flows from Basins OS-3 and G. These off-site pre-developed flows continue to sheet flow through the site towards Highway 83. No development is proposed within Basin G, thus there is no significant change from the pre-developed flows of (Q_5 = 18 cfs and Q_{100} = 124 cfs).

HYDROLOGIC CALCULATIONS

Hydrologic calculations were performed using the City of Colorado Springs/El Paso County Drainage Criteria Manual, as revised in November 1991 and 1994 with County adopted Chapter 6 and Section 3.2.1 of Chapter 13 of the City of Colorado Springs/El Paso County Drainage Criteria Manual as revised in May 2014. Individual on-site developed basin design used for culvert sizing and system routing was calculated using the Rational Method. BMP design was calculated using the Urban Storm Drainage Criteria Manual for a Sediment Basin (SC-7).

The City of Colorado Springs/El Paso County DCM requires the Four Step Process for receiving water protection that focuses on reducing runoff volumes, treating the water quality capture volume (WQCV), stabilizing drainage ways, and implementing long-term source controls. The Four Step Process pertains to management of smaller, frequently occurring storm events, as opposed to larger storms for which drainage and flood control infrastructure are sized. Implementation of these four steps helps to achieve storm water permit requirements. This site adheres to this **Four Step Process** as follows:

1. **Employ Runoff Reduction Practices:** Development of project site is proposed large lot single family residential (5.0 ac. min.) with homes and associated landscaping. Proposed impervious areas (roof tops, patios) will sheet flow across landscaped ground and through large open areas within the lots across natural vegetation to slow runoff and increase time of concentration prior to being conveyed to the proposed public roads and adjacent properties. This will minimize directly connected impervious areas within the project site.

2. **Stabilize Drainageways:** This site will utilize roadside ditches along the driveway extension. These facilities will then direct the on-site development flows to the multiple BMPs (permanent sediment basins), designed to provide sediment control for the introduced impervious areas of the proposed paved driveway. Based upon the proposed large lot, forested rural residential nature, there is no significant change from the pre-developed flows and thus no impact to downstream drainageways is anticipated.

Please update narrative for step 3 to also include a statement about runoff increases with development. Discuss whether runoff at developed conditions is at or below historic conditions, and whether any increases in runoff are negligible.

3. **Provide Water Quality Capture Volume (WQCV):** Per ECM I.7.1.B, WQCV is not required for this type of development. However, t ADDED. SEE REVISED ediment basins and rock check dams are proposed to help mitigate se

4. **Consider need for Industrial and Commercial BMPs**: No industrial or commercial uses are proposed within this development. However, a site specific storm water quality and erosion control plan and narrative is being submitted concurrently with this report and development. Details such as site specific construction BMP's as well as permanent sediment control BMP's are detailed in this plan and narrative to protect receiving waters. Roadside ditch stabilization, in the form of erosion control blanketing (as specified on the plans) are also proposed. The described BMP's will be constructed by the developer upon approval by El Paso County Staff.

FLOODPLAIN STATEMENT

No portion of this site is located within a FEMA floodplain as determined by the Flood Insurance Rate Maps (F.I.R.M.) Map Numbers 08041C 0295G, with effective date of December 7, 2018 (See Appendix).

EROSION CONTROL PLAN

The Drainage Criteria Manual specifies an Erosion Control Plan and associated cost estimate be submitted with the Final Drainage Report. We respectfully request that the Erosion Control Plan and cost estimate be submitted in conjunction with the Grading and Erosion Control Plan and construction assurances posted prior to obtaining a grading permit.

DRAINAGE & BRIDGE FEES

This site lies within the Black Squirrel Creek drainage basin. The total acreage for the property is 28.65 acres. The percent imperviousness for this subdivision is calculated as follows:

RR-5 Zone Area

(Per El Paso County Percent Impervious Chart for 5.0 ac. lots: 7**%**)

28.65 ac. x 7% = **2.01 Impervious Ac.**

CLASSIC CONSULTING ENGINEERS & SURVEYORS

The following calculations are based on the 2020 drainage/bridge fees for the Black Squirrel Creek Drainage Basin:

UPDATED TO 2021 FEES

Please update calculations to use 2021 drainage and bridge fees.

FEE TOTALS (prior to reduction).

Bridge Fees	$545.00 x 2.01 Impervious Ac.	=	$ 1,095.45
Drainage Fees	$ 8,664.00 x 2.01 Impervious Ac.	=	$ 17,414.64

Per the ECM 3.10.2a, this development requests a 25% reduction of drainage fees based on the low density lots proposed (5 ac. min lot size). This reduction is as follows:

Please update reference to ECM appendix L.3.10.2a.

Low Density Lot Reduction (25%) $ 17,414.64 x 25% = $ 4,353.66

UPDATED

FEE TOTALS (with reduction):

Bridge Fees	**$ 1,095.45**
Drainage Fees	**$ 13,060.98**

SUMMARY

This proposed development remains consistent with pre-development drainage conditions with the construction of the proposed on-site permanent sediment basins. These proposed facilities meet current criteria and provide sediment control per ECM 1.7.1.B. The proposed development will not adversely impact surrounding developments.

UPDATED AND REVISED

Revise the 1 to I.

Also, include a statement describing changes in runoff after the development and whether the change warrants an on-site flood control detention facility.

CLASSIC CONSULTING ENGINEERS & SURVEYORS

PREPARED BY:
Classic Consulting Engineers & Surveyors, LLC

Marc A. Whorton, P.E.
Project Manager

mw/257500/Reports/FDR.doc

REFERENCES

1. City of Colorado Springs/County of El Paso Drainage Criteria Manual, as revised in November 1991 and 1994 with County adopted Chapter 6 and Section 3.2.1 of Chapter 13 of the City of Colorado Springs/El Paso County Drainage Criteria Manual as revised in May 2014.

2. Soil Survey of El Paso County Area, Colorado Soil Conservation Service, June 1981.

Please update reference list to include EPC ECM, latest revision 2020 and Black Squirrel DBPS, and EPC DCM Vol. 1 and 2, latest revisions.

ADDED/REVISED THESE REFERENCES

APPENDIX

VICINITY MAP

CLASSIC SM
CONSULTING
ENGINEERS & SURVEYORS

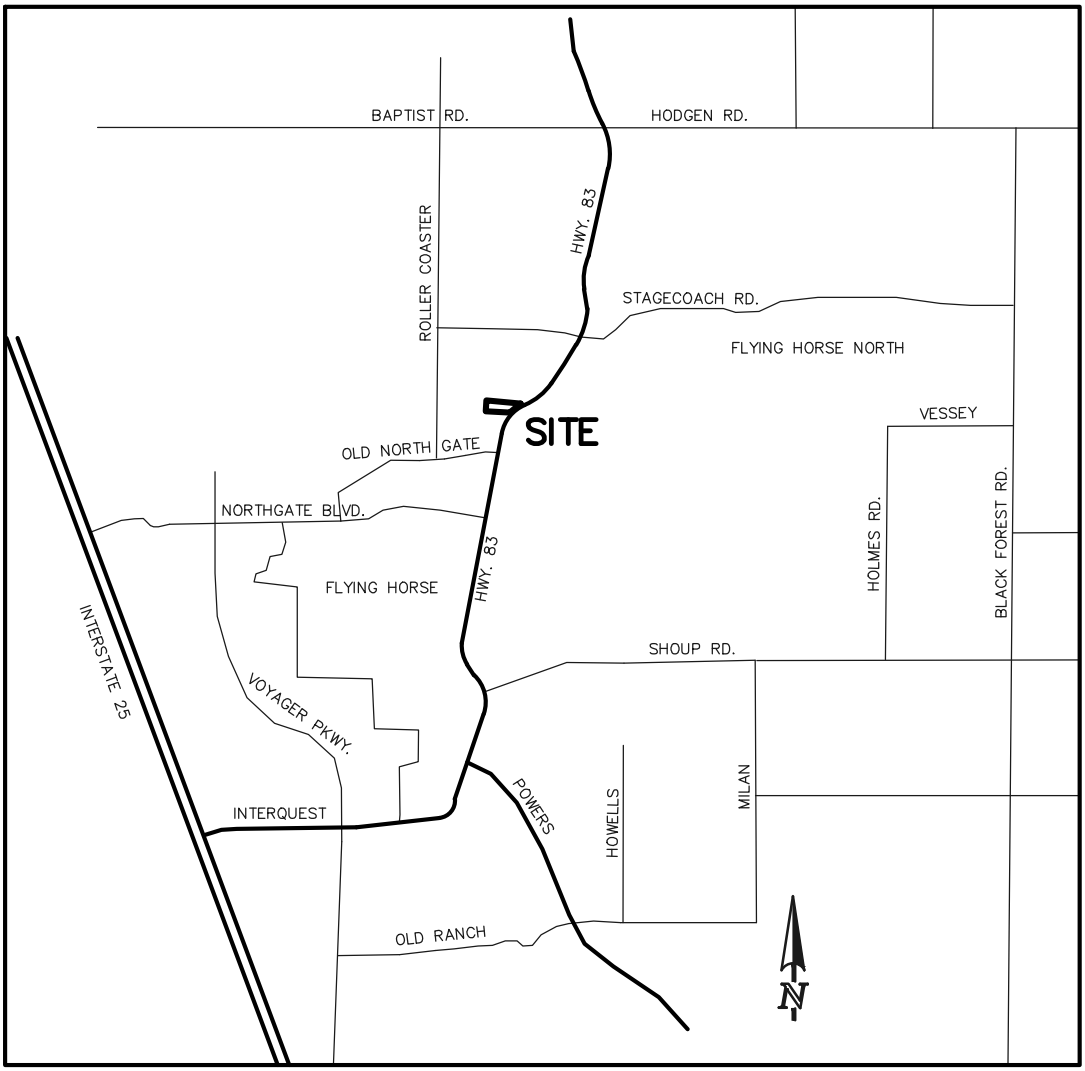

VICINITY MAP

NTS

SOILS MAP (S.C.S SURVEY)

Soil Map—El Paso County Area, Colorado

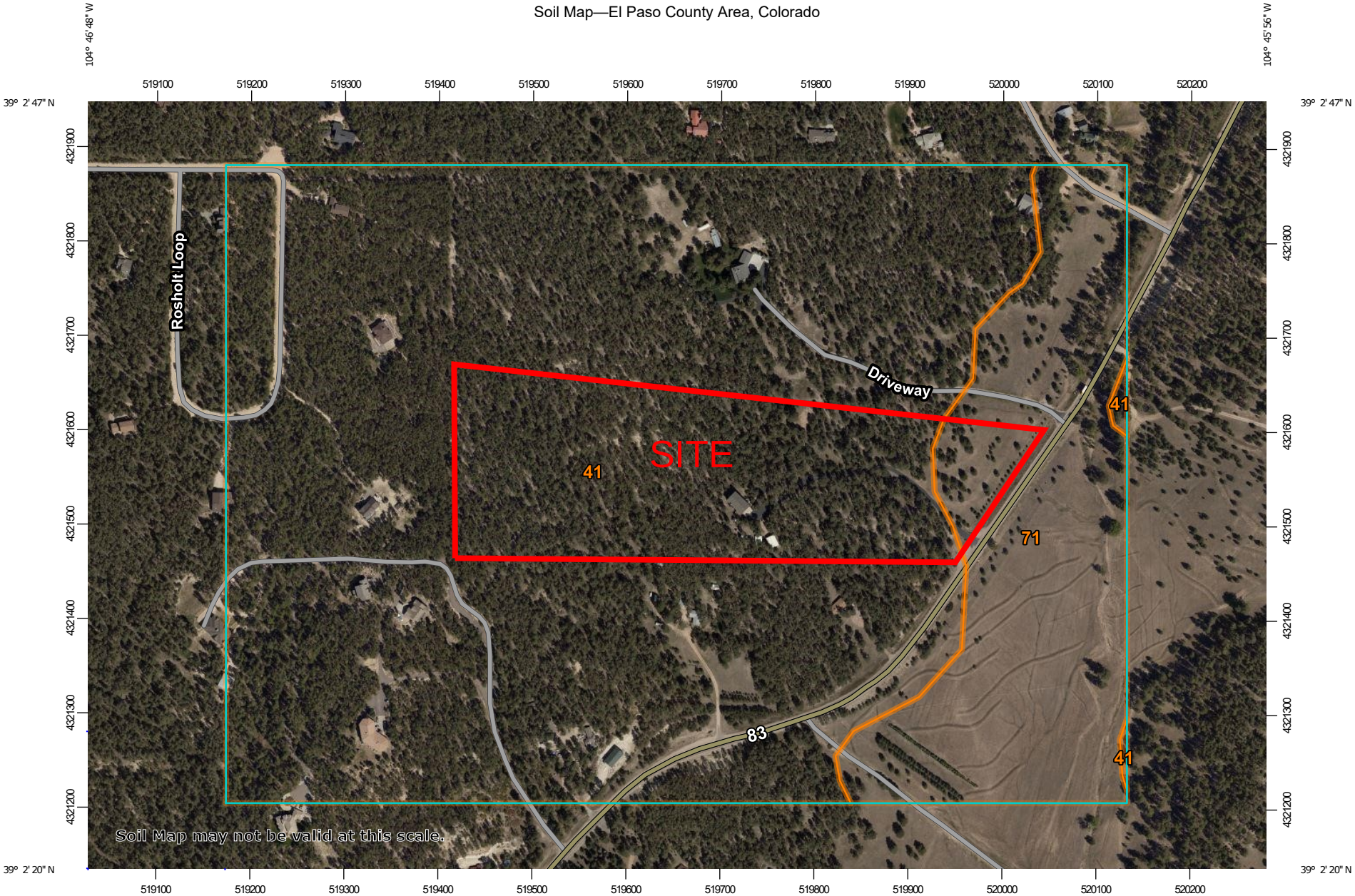

Map Scale: 1:5,730 if printed on A landscape (11" x 8.5") sheet.

N

Meters: 0 50 100 200 300

Feet: 0 250 500 1000 1500

Map projection: Web Mercator Corner coordinates: WGS84 Edge tics: UTM Zone 13N WGS84

MAP LEGEND

Area of Interest (AOI)

Area of Interest (AOI)

Soils

Soil Map Unit Polygons

Soil Map Unit Lines

Soil Map Unit Points

Special Point Features

Blowout

Borrow Pit

Clay Spot

Closed Depression

Gravel Pit

Gravelly Spot

Landfill

Lava Flow

Marsh or swamp

Mine or Quarry

Miscellaneous Water

Perennial Water

Rock Outcrop

Saline Spot

Sandy Spot

Severely Eroded Spot

Sinkhole

Slide or Slip

Sodic Spot

Spoil Area

Stony Spot

Very Stony Spot

Wet Spot

Other

Special Line Features

Water Features

Streams and Canals

Transportation

Rails

Interstate Highways

US Routes

Major Roads

Local Roads

Background

Aerial Photography

MAP INFORMATION

The soil surveys that comprise your AOI were mapped at 1:24,000.

Warning: Soil Map may not be valid at this scale.

Enlargement of maps beyond the scale of mapping can cause misunderstanding of the detail of mapping and accuracy of soil line placement. The maps do not show the small areas of contrasting soils that could have been shown at a more detailed scale.

Please rely on the bar scale on each map sheet for map measurements.

Source of Map: Natural Resources Conservation Service
Web Soil Survey URL:
Coordinate System: Web Mercator (EPSG:3857)

Maps from the Web Soil Survey are based on the Web Mercator projection, which preserves direction and shape but distorts distance and area. A projection that preserves area, such as the Albers equal-area conic projection, should be used if more accurate calculations of distance or area are required.

This product is generated from the USDA-NRCS certified data as of the version date(s) listed below.

Soil Survey Area: El Paso County Area, Colorado
Survey Area Data: Version 18, Jun 5, 2020

Soil map units are labeled (as space allows) for map scales 1:50,000 or larger.

Date(s) aerial images were photographed: Aug 19, 2018—Sep 23, 2018

The orthophoto or other base map on which the soil lines were compiled and digitized probably differs from the background imagery displayed on these maps. As a result, some minor shifting of map unit boundaries may be evident.

Map Unit Legend

Map Unit Symbol	Map Unit Name	Acres in AOI	Percent of AOI
41	Kettle gravelly loamy sand, 8 to 40 percent slopes	130.6	81.2%
71	Pring coarse sandy loam, 3 to 8 percent slopes	30.2	18.8%
Totals for Area of Interest		**160.8**	**100.0%**

El Paso County Area, Colorado

41—Kettle gravelly loamy sand, 8 to 40 percent slopes

Map Unit Setting

National map unit symbol: 368h
Elevation: 7,000 to 7,700 feet
Farmland classification: Not prime farmland

Map Unit Composition

Kettle and similar soils: 85 percent
Estimates are based on observations, descriptions, and transects of the mapunit.

Description of Kettle

Setting

Landform: Hills
Landform position (three-dimensional): Side slope
Down-slope shape: Linear
Across-slope shape: Linear
Parent material: Sandy alluvium derived from arkose

Typical profile

E - 0 to 16 inches: gravelly loamy sand
Bt - 16 to 40 inches: gravelly sandy loam
C - 40 to 60 inches: extremely gravelly loamy sand

Properties and qualities

Slope: 8 to 40 percent
Depth to restrictive feature: More than 80 inches
Drainage class: Somewhat excessively drained
Runoff class: Medium
Capacity of the most limiting layer to transmit water (Ksat): High (2.00 to 6.00 in/hr)
Depth to water table: More than 80 inches
Frequency of flooding: None
Frequency of ponding: None
Available water capacity: Low (about 3.4 inches)

Interpretive groups

Land capability classification (irrigated): None specified
Land capability classification (nonirrigated): 7e
Hydrologic Soil Group: B
Hydric soil rating: No

Minor Components

Pleasant

Percent of map unit:
Landform: Depressions
Hydric soil rating: Yes

Other soils

Percent of map unit:
Hydric soil rating: No

Data Source Information

Soil Survey Area: El Paso County Area, Colorado
Survey Area Data: Version 18, Jun 5, 2020

El Paso County Area, Colorado

41—Kettle gravelly loamy sand, 8 to 40 percent slopes

Map Unit Setting

National map unit symbol: 368h
Elevation: 7,000 to 7,700 feet
Farmland classification: Not prime farmland

Map Unit Composition

Kettle and similar soils: 85 percent
Estimates are based on observations, descriptions, and transects of the mapunit.

Description of Kettle

Setting

Landform: Hills
Landform position (three-dimensional): Side slope
Down-slope shape: Linear
Across-slope shape: Linear
Parent material: Sandy alluvium derived from arkose

Typical profile

E - 0 to 16 inches: gravelly loamy sand
Bt - 16 to 40 inches: gravelly sandy loam
C - 40 to 60 inches: extremely gravelly loamy sand

Properties and qualities

Slope: 8 to 40 percent
Depth to restrictive feature: More than 80 inches
Drainage class: Somewhat excessively drained
Runoff class: Medium
Capacity of the most limiting layer to transmit water (Ksat): High (2.00 to 6.00 in/hr)
Depth to water table: More than 80 inches
Frequency of flooding: None
Frequency of ponding: None
Available water capacity: Low (about 3.4 inches)

Interpretive groups

Land capability classification (irrigated): None specified
Land capability classification (nonirrigated): 7e
Hydrologic Soil Group: B
Hydric soil rating: No

Minor Components

Pleasant

Percent of map unit:
Landform: Depressions
Hydric soil rating: Yes

Other soils

Percent of map unit:
Hydric soil rating: No

Data Source Information

Soil Survey Area: El Paso County Area, Colorado
Survey Area Data: Version 18, Jun 5, 2020

FEMA MAP

NOTES TO USERS

This map is for use in administering the National Flood Insurance Program. It does not necessarily identify all areas subject to flooding, particularly from local drainage sources of small size. The **community map repository** should be consulted for possible updated or additional flood hazard information.

To obtain more detailed information in areas where **Base Flood Elevations** (BFEs) and/or **floodways** have been determined, users are encouraged to consult the Flood Profiles and Floodway Data and/or Summary of Stillwater Elevations tables contained within the Flood Insurance Study (FIS) report that accompanies this FIRM. Users should be aware that BFEs shown on the FIRM represent rounded whole-foot elevations. These BFEs are intended for flood insurance rating purposes only and should not be used as the sole source of flood elevation information. Accordingly, flood elevation data presented in the FIS report should be utilized in conjunction with the FIRM for purposes of construction and/or floodplain management.

Coastal Base Flood Elevations shown on this map apply only landward of 0.0' North American Vertical Datum of 1988 (NAVD88). Users of this FIRM should be aware that coastal flood elevations are also provided in the Summary of Stillwater Elevations table in the Flood Insurance Study report for this jurisdiction. Elevations shown in the Summary of Stillwater Elevations table should be used for construction and/or floodplain management purposes when they are higher than the elevations shown on this FIRM.

Boundaries of the **floodways** were computed at cross sections and interpolated between cross sections. The floodways were based on hydraulic considerations with regard to requirements of the National Flood Insurance Program. Floodway widths and other pertinent floodway data are provided in the Flood Insurance Study report for this jurisdiction.

Certain areas not in Special Flood Hazard Areas may be protected by **flood control structures**. Refer to section 2.4 "Flood Protection Measures" of the Flood Insurance Study report for information on flood control structures for this jurisdiction.

The **projection** used in the preparation of this map was Universal Transverse Mercator (UTM) zone 13. The **horizontal datum** was NAD83, GRS80 spheroid. Differences in datum, spheroid, projection or UTM zones zones used in the production of FIRMs for adjacent jurisdictions may result in slight positional differences in map features across jurisdiction boundaries. These differences do not affect the accuracy of this FIRM.

Flood elevations on this map are referenced to the **North American Vertical Datum of 1988 (NAVD88)**. These flood elevations must be compared to structure and ground elevations referenced to the same **vertical datum**. For information regarding conversion between the National Geodetic Vertical Datum of 1929 and the North American Vertical Datum of 1988, visit the National Geodetic Survey website at http://www.ngs.noaa.gov/ or contact the National Geodetic Survey at the following address:

NGS Information Services
NOAA, N/NGS12
National Geodetic Survey
SSMC-3, #9202
1315 East-West Highway
Silver Spring, MD 20910-3282

To obtain current elevation, description, and/or location information for **bench marks** shown on this map, please contact the Information Services Branch of the National Geodetic Survey at (301) 713-3242 or visit its website at http://www.ngs.noaa.gov/.

Base Map information shown on this FIRM was provided in digital format by El Paso County, Colorado Springs Utilities, City of Fountain, Bureau of Land Management, National Oceanic and Atmospheric Administration, United States Geological Survey, and Anderson Consulting Engineers, Inc. These data are current as of 2006.

This map reflects more detailed and up-to-date **stream channel configurations and floodplain delineations** than those shown on the previous FIRM for this jurisdiction. The floodplains and floodways that were transferred from the previous FIRM may have been adjusted to conform to these new stream channel configurations. As a result, the Flood Profiles and Floodway Data tables in the Flood Insurance Study Report (which contains authoritative hydraulic data) may reflect stream channel distances that differ from what is shown on this map. The profile baselines depicted on this map represent the hydraulic modeling baselines that match the flood profiles and Floodway Data Tables if applicable, in the FIS report. As a result, the profile baselines may deviate significantly from the new base map channel representation and may appear outside of the floodplain.

Corporate limits shown on this map are based on the best data available at the time of publication. Because changes due to annexations or de-annexations may have occurred after this map was published, map users should contact appropriate community officials to verify current corporate limit locations.

Please refer to the separately printed **Map Index** for an overview map of the county showing the layout of map panels; community map repository addresses; and a Listing of Communities table containing National Flood Insurance Program dates for each community as well as a listing of the panels on which each community is located.

Contact **FEMA Map Service Center** (MSC) via the FEMA Map Information eXchange (FMIX) 1-877-336-2627 for information on available products associated with this FIRM. Available products may include previously issued Letters of Map Change, a Flood Insurance Study Report, and/or digital versions of this map. The MSC may also be reached by Fax at 1-800-358-9620 and its website at http://www.msc.fema.gov/.

If you have **questions about this map** or questions concerning the National Flood Insurance Program in general, please call **1-877-FEMA MAP** (1-877-336-2627) or visit the FEMA website at http://www.fema.gov/business/nfip.

El Paso County Vertical Datum Offset Table

Flooding Source	Vertical Datum Offset (ft)
REFER TO SECTION 3.3 OF THE EL PASO COUNTY FLOOD INSURANCE STUDY FOR STREAM BY STREAM VERTICAL DATUM CONVERSION INFORMATION	

Panel Location Map

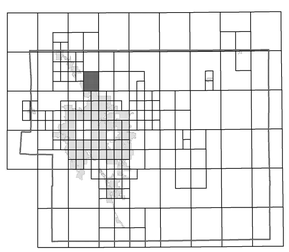

This Digital Flood Insurance Rate Map (DFIRM) was produced through a Cooperating Technical Partner (CTP) agreement between the State of Colorado Water Conservation Board (CWCB) and the Federal Emergency Management Agency (FEMA).

Additional Flood Hazard information and resources are available from local communities and the Colorado Water Conservation Board.

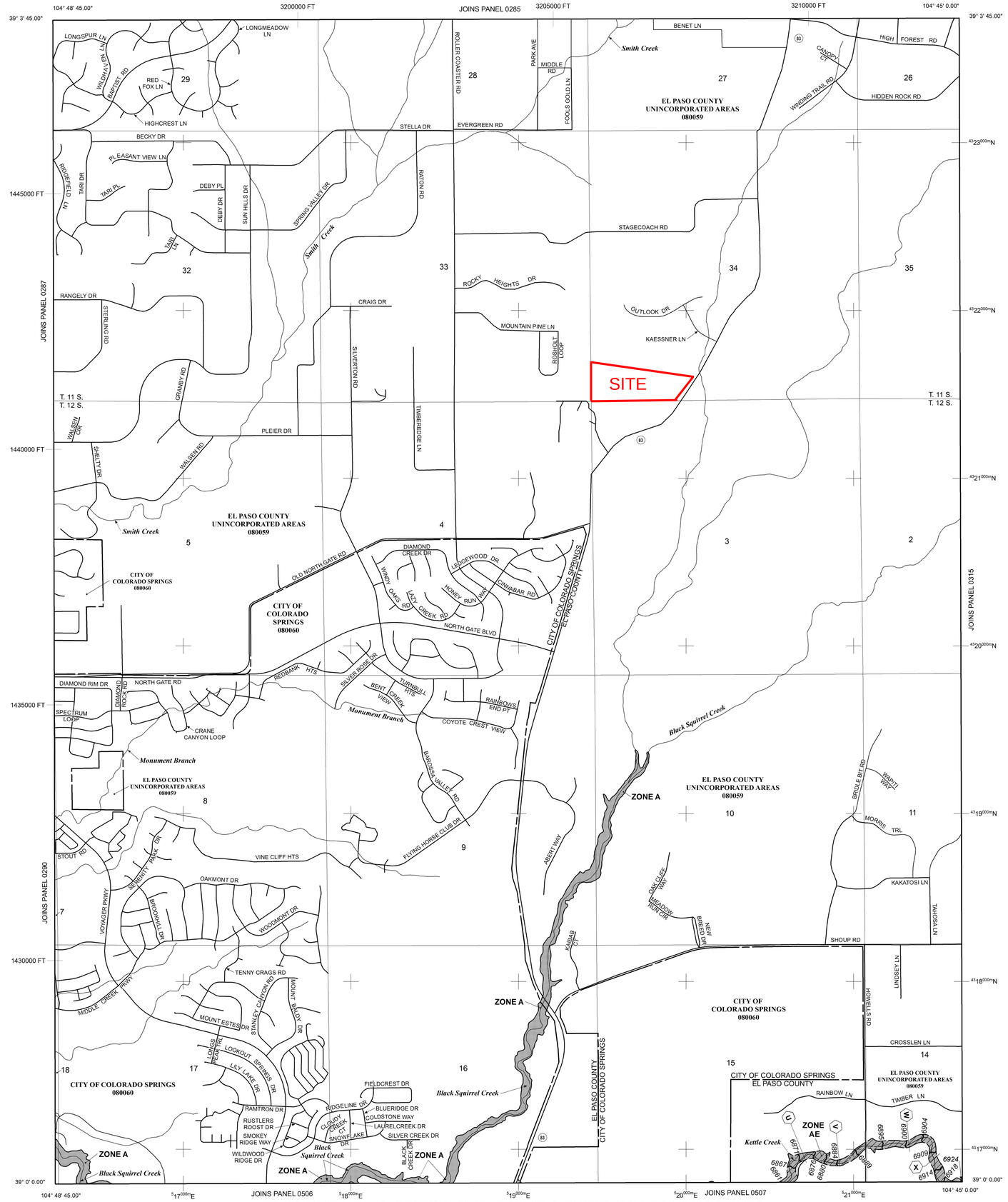

NOTE: MAP AREA SHOWN ON THIS PANEL IS LOCATED WITHIN TOWNSHIP 11 SOUTH, RANGE 66 WEST, AND TOWNSHIP 12 SOUTH, RANGE 66 WEST.

LEGEND

SPECIAL FLOOD HAZARD AREAS (SFHAS) SUBJECT TO INUNDATION BY THE 1% ANNUAL CHANCE FLOOD

The 1% annual chance flood (100-year flood), also known as the base flood, is the flood that has a 1% chance of being equaled or exceeded in any given year. The Special Flood Hazard Area is the area subject to flooding by the 1% annual chance flood. Areas of Special Flood Hazard include Zones A, AE, AH, AO, AR, A99, V, and VE. The Base Flood Elevation is the water-surface elevation of the 1% annual chance flood.

ZONE A	No Base Flood Elevations determined.
ZONE AE	Base Flood Elevations determined.
ZONE AH	Flood depths of 1 to 3 feet (usually areas of ponding); Base Flood Elevations determined.
ZONE AO	Flood depths of 1 to 3 feet (usually sheet flow on sloping terrain); average depths determined. For areas of alluvial fan flooding, velocities also determined.
ZONE AR	Special Flood Hazard Area Formerly protected from the 1% annual chance flood by a flood control system that was subsequently decertified. Zone AR indicates that the former flood control system is being restored to provide protection from the 1% annual chance or greater flood.
ZONE A99	Area to be protected from 1% annual chance flood by a Federal flood protection system under construction; no Base Flood Elevations determined.
ZONE V	Coastal flood zone with velocity hazard (wave action); no Base Flood Elevations determined.
ZONE VE	Coastal flood zone with velocity hazard (wave action); Base Flood Elevations determined.

FLOODWAY AREAS IN ZONE AE

The floodway is the channel of a stream plus any adjacent floodplain areas that must be kept free of encroachment so that the 1% annual chance flood can be carried without substantial increases in flood heights.

OTHER FLOOD AREAS

ZONE X	Areas of 0.2% annual chance flood; areas of 1% annual chance flood with average depths of less than 1 foot or with drainage areas less than 1 square mile; and areas protected by levees from 1% annual chance flood.

OTHER AREAS

ZONE X	Areas determined to be outside the 0.2% annual chance floodplain.
ZONE D	Areas in which flood hazards are undetermined, but possible.

COASTAL BARRIER RESOURCES SYSTEM (CBRS) AREAS

OTHERWISE PROTECTED AREAS (OPAs)

CBRS areas and OPAs are normally located within or adjacent to Special Flood Hazard Areas.

	Floodplain boundary
	Floodway boundary
	Zone D Boundary
	CBRS and OPA boundary
	Boundary dividing Special Flood Hazard Areas of different Base Flood Elevations, flood depths or flood velocities.
513	Base Flood Elevation line and value; elevation in feet*
(EL 987)	Base Flood Elevation value where uniform within zone; elevation in feet*

* Referenced to the North American Vertical Datum of 1988 (NAVD 88)

A — A	Cross section line
23 - - - - 23	Transect line
97° 07' 30.00" 32° 22' 30.00"	Geographic coordinates referenced to the North American Datum of 1983 (NAD 83)
4275000mN	1000-meter Universal Transverse Mercator grid ticks, zone 13
6000000 FT	5000-foot grid ticks: Colorado State Plane coordinate system, central zone (FIPSZONE 0502), Lambert Conformal Conic Projection
DX5510 ×	Bench mark (see explanation in Notes to Users section of this FIRM panel)
• M1.5	River Mile

MAP REPOSITORIES
Refer to Map Repositories list on Map Index

EFFECTIVE DATE OF COUNTYWIDE
FLOOD INSURANCE RATE MAP
MARCH 17, 1997

EFFECTIVE DATE(S) OF REVISION(S) TO THIS PANEL
DECEMBER 7, 2018 - to update corporate limits, to change Base Flood Elevations and Special Flood Hazard Areas, to update map format, to add roads and road names, and to incorporate previously issued Letters of Map Revision.

For community map revision history prior to countywide mapping, refer to the Community Map History Table located in the Flood Insurance Study report for this jurisdiction.

To determine if flood insurance is available in this community, contact your insurance agent or call the National Flood Insurance Program at 1-800-638-6620.

MAP SCALE 1" = 1000'

500 0 1000 2000 FEET

300 0 300 600 METERS

NFIP

NATIONAL FLOOD INSURANCE PROGRAM

PANEL 0295G

FIRM

FLOOD INSURANCE RATE MAP

EL PASO COUNTY, COLORADO

AND INCORPORATED AREAS

PANEL 295 OF 1300

(SEE MAP INDEX FOR FIRM PANEL LAYOUT)

CONTAINS:

COMMUNITY	NUMBER	PANEL	SUFFIX
COLORADO SPRINGS, CITY OF	080060	0295	G
EL PASO COUNTY	080059	0295	G

Notice to User: The **Map Number** shown below should be used when placing map orders; the **Community Number** shown above should be used on insurance applications for the subject community.

MAP NUMBER
08041C0295G

MAP REVISED
DECEMBER 7, 2018

Federal Emergency Management Agency

HYDROLOGIC/HYDRAULIC CALCULATIONS

CLASSIC SM
CONSULTING
ENGINEERS & SURVEYORS

For Colorado Springs and much of the Fountain Creek watershed, the 1-hour depths are fairly uniform and are summarized in Table 6-2. Depending on the location of the project, rainfall depths may be calculated using the described method and the NOAA Atlas maps shown in Figures 6-6 through 6-17.

Table 6-2. Rainfall Depths for Colorado Springs

Return Period	1-Hour Depth	6-Hour Depth	24-Hour Depth
2	1.19	1.70	2.10
5	1.50	2.10	2.70
10	1.75	2.40	3.20
25	2.00	2.90	3.60
50	2.25	3.20	4.20
100	2.52	3.50	4.60

Where Z= 6,840 ft/100

These depths can be applied to the design storms or converted to intensities (inches/hour) for the Rational Method as described below. However, as the basin area increases, it is unlikely that the reported point rainfalls will occur uniformly over the entire basin. To account for this characteristic of rain storms an adjustment factor, the Depth Area Reduction Factor (DARF) is applied. This adjustment to rainfall depth and its effect on design storms is also described below. The UDFCD UD-Rain spreadsheet, available on UDFCD's website, also provides tools to calculate point rainfall depths and Intensity-Duration-Frequency curves[2] and should produce similar depth calculation results.

2.2 Design Storms

Design storms are used as input into rainfall/runoff models and provide a representation of the typical temporal distribution of rainfall events when the creation or routing of runoff hydrographs is required. It has long been observed that rainstorms in the Front Range of Colorado tend to occur as either short-duration, high-intensity, localized, convective thunderstorms (cloud bursts) or longer-duration, lower-intensity, broader, frontal (general) storms. The significance of these two types of events is primarily determined by the size of the drainage basin being studied. Thunderstorms can create high rates of runoff within a relatively small area, quickly, but their influence may not be significant very far downstream. Frontal storms may not create high rates of runoff within smaller drainage basins due to their lower intensity, but tend to produce larger flood flows that can be hazardous over a broader area and extend further downstream.

- **Thunderstorms**: Based on the extensive evaluation of rain storms completed in the Carlton study (Carlton 2011), it was determined that typical thunderstorms have a duration of about 2 hours. The study evaluated over 300,000 storm cells using gage-adjusted NEXRAD data, collected over a 14-year period (1994 to 2008). Storms lasting longer than 3 hours were rarely found. Therefore, the results of the Carlton study have been used to define the shorter duration design storms.

  To determine the temporal distribution of thunderstorms, 22 gage-adjusted NEXRAD storm cells were studied in detail. Through a process described in a technical memorandum prepared by the City of Colorado Springs (City of Colorado Springs 2012), the results of this analysis were interpreted and normalized to the 1-hour rainfall depth to create the distribution shown in Table 6-3 with a 5 minute time interval for drainage basins up to 1 square mile in size. This distribution represents the rainfall

Please highlight the runoff coefficients that were used.

ADDED HIGHLIGHTS BUT ALSO SEE CALC. SHEETS FOR COEFFICIENTS USED.

icients for Rational Method
(Source: UDFCD 2001)

Land Use or Surface Characteristics	Percent Impervious	Runoff Coefficients											
		2-year		5-year		10-year		25-year		50-year		100-year	
		HSG A&B	HSG C&D	HSG A&B	HSG C&D	HSG A&B	HSG C&D	HSG A&B	HSG C&D	HSG A&B	HSG C&D	HSG A&B	HSG C&D
Business													
Commercial Areas	95	0.79	0.80	0.81	0.82	0.83	0.84	0.85	0.87	0.87	0.88	0.88	0.89
Neighborhood Areas	70	0.45	0.49	0.49	0.53	0.53	0.57	0.58	0.62	0.60	0.65	0.62	0.68
Residential													
1/8 Acre or less	65	0.41	0.45	0.45	0.49	0.49	0.54	0.54	0.59	0.57	0.62	0.59	0.65
1/4 Acre	40	0.23	0.28	0.30	0.35	0.36	0.42	0.42	0.50	0.46	0.54	0.50	0.58
1/3 Acre	30	0.18	0.22	0.25	0.30	0.32	0.38	0.39	0.47	0.43	0.52	0.47	0.57
1/2 Acre	25	0.15	0.20	0.22	0.28	0.30	0.36	0.37	0.46	0.41	0.51	0.46	0.56
1 Acre	20	0.12	0.17	0.20	0.26	0.27	0.34	0.35	0.44	0.40	0.50	0.44	0.55
Industrial													
Light Areas	80	0.57	0.60	0.59	0.63	0.63	0.66	0.66	0.70	0.68	0.72	0.70	0.74
Heavy Areas	90	0.71	0.73	0.73	0.75	0.75	0.77	0.78	0.80	0.80	0.82	0.81	0.83
Parks and Cemeteries	7	0.05	0.09	0.12	0.19	0.20	0.29	0.30	0.40	0.34	0.46	0.39	0.52
Playgrounds	13	0.07	0.13	0.16	0.23	0.24	0.31	0.32	0.42	0.37	0.48	0.41	0.54
Railroad Yard Areas	40	0.23	0.28	0.30	0.35	0.36	0.42	0.42	0.50	0.46	0.54	0.50	0.58
Undeveloped Areas													
Historic Flow Analysis-- Greenbelts, Agriculture	2	0.03	0.05	0.09	0.16	0.17	0.26	0.26	0.38	0.31	0.45	0.36	0.51
Pasture/Meadow	0	0.02	0.04	0.08	0.15	0.15	0.25	0.25	0.37	0.30	0.44	0.35	0.50
Forest	0	0.02	0.04	0.08	0.15	0.15	0.25	0.25	0.37	0.30	0.44	0.35	0.50
Exposed Rock	100	0.89	0.89	0.90	0.90	0.92	0.92	0.94	0.94	0.95	0.95	0.96	0.96
Offsite Flow Analysis (when landuse is undefined)	45	0.26	0.31	0.32	0.37	0.38	0.44	0.44	0.51	0.48	0.55	0.51	0.59
Streets													
Paved	100	0.89	0.89	0.90	0.90	0.92	0.92	0.94	0.94	0.95	0.95	0.96	0.96
Gravel	80	0.57	0.60	0.59	0.63	0.63	0.66	0.66	0.70	0.68	0.72	0.70	0.74
Drive and Walks	100	0.89	0.89	0.90	0.90	0.92	0.92	0.94	0.94	0.95	0.95	0.96	0.96
Roofs	90	0.71	0.73	0.73	0.75	0.75	0.77	0.78	0.80	0.80	0.82	0.81	0.83
Lawns	0	0.02	0.04	0.08	0.15	0.15	0.25	0.25	0.37	0.30	0.44	0.35	0.50

3.2 Time of Concentration

One of the basic assumptions underlying the Rational Method is that runoff is a function of the average rainfall rate during the time required for water to flow from the hydraulically most remote part of the drainage area under consideration to the design point. However, in practice, the time of concentration can be an empirical value that results in reasonable and acceptable peak flow calculations.

For urban areas, the time of concentration (t_c) consists of an initial time or overland flow time (t_i) plus the travel time (t_t) in the storm sewer, paved gutter, roadside drainage ditch, or drainage channel. For non-urban areas, the time of concentration consists of an overland flow time (t_i) plus the time of travel in a concentrated form, such as a swale or drainageway. The travel portion (t_t) of the time of concentration can be estimated from the hydraulic properties of the storm sewer, gutter, swale, ditch, or drainageway. Initial time, on the other hand, will vary with surface slope, depression storage, surface cover, antecedent rainfall, and infiltration capacity of the soil, as well as distance of surface flow. The time of concentration is represented by Equation 6-7 for both urban and non-urban areas.

Figure 6-5. Colorado Springs Rainfall Intensity Duration Frequency

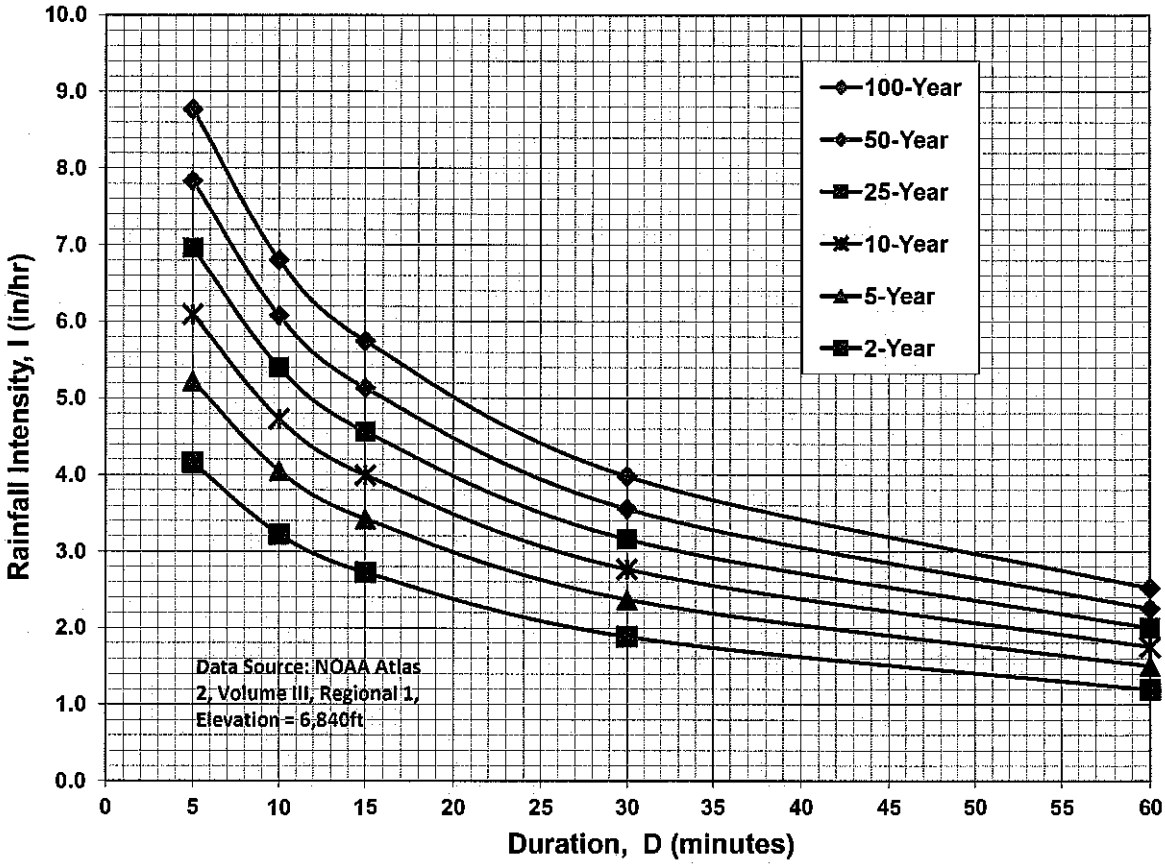

IDF Equations

$I_{100} = -2.52 \ln(D) + 12.735$

$I_{50} = -2.25 \ln(D) + 11.375$

$I_{25} = -2.00 \ln(D) + 10.111$

$I_{10} = -1.75 \ln(D) + 8.847$

$I_{5} = -1.50 \ln(D) + 7.583$

$I_{2} = -1.19 \ln(D) + 6.035$

Note: Values calculated by equations may not precisely duplicate values read from figure.

JOB NAME: *JOHNSON ESTATES FILING NO. 1*
JOB NUMBER: *2575.00*
DATE: *12/10/20*
CALCULATED BY: *MAW*

FINAL DRAINAGE REPORT ~ BASIN RUNOFF COEFFICIENT SUMMARY

BASIN	TOTAL AREA (AC)	IMPERVIOUS AREA / DRIVEWAYS				LANDSCAPE/UNDEVELOPED AREAS				WEIGHTED			WEIGHTED CA		
		AREA (AC)	C(2)	C(5)	C(100)	AREA (AC)	C(2)	C(5)	C(100)	C(2)	C(5)	C(100)	**CA(2)**	**CA(5)**	**CA(100)**
EX-1	2.6	0.00	0.89	0.90	0.96	2.60	0.02	0.08	0.35	0.02	0.08	0.35	**0.05**	**0.21**	**0.91**
EX-2	6.6	0.00	0.89	0.90	0.96	6.60	0.02	0.08	0.35	0.02	0.08	0.35	**0.13**	**0.53**	**2.31**
EX-3	3.9	0.03	0.89	0.90	0.96	3.87	0.02	0.08	0.35	0.03	0.09	0.35	**0.10**	**0.34**	**1.38**
EX-4	0.4	0.01	0.89	0.90	0.96	0.39	0.02	0.08	0.35	0.04	0.10	0.37	**0.02**	**0.04**	**0.15**
EX-5	4.3	0.10	0.89	0.90	0.96	4.20	0.02	0.08	0.35	0.04	0.10	0.36	**0.17**	**0.43**	**1.57**
EX-6	6.0	0.08	0.89	0.90	0.96	5.92	0.02	0.08	0.35	0.03	0.09	0.36	**0.19**	**0.55**	**2.15**
EX-7	2.1	0.07	0.89	0.90	0.96	2.03	0.02	0.08	0.35	0.05	0.11	0.37	**0.10**	**0.23**	**0.78**
EX-8	2.0	0.07	0.89	0.90	0.96	1.93	0.02	0.08	0.35	0.05	0.11	0.37	**0.10**	**0.22**	**0.74**

JOB NAME:	*JOHNSON ESTATES FILING NO. 1*
JOB NUMBER:	*2575.00*
DATE:	*12/10/20*
CALC'D BY:	*MAW*

$$t_i = \frac{0.395(1.1 - C_5)\sqrt{L}}{S^{0.33}}$$

$$V = C_v S_w^{0.5}$$

Tc=L/V

Table 6-7. Conveyance Coefficient, C_v

Type of Land Surface	C_v
Heavy meadow	2.5
Tillage/field	5
Riprap (not buried)*	6.5
Short pasture and lawns	7
Nearly bare ground	10
Grassed waterway	15
Paved areas and shallow paved swales	20

$$t_c = \frac{L}{180} + 10$$

*For buried riprap, select C_v value based on type of vegetative cover.

FINAL DRAINAGE REPORT ~ BASIN RUNOFF SUMMARY

BASIN	TOTAL AREA (AC)	WEIGHTED CA(2)	CA(5)	CA(100)	OVERLAND C(5)	Length (ft)	Height (ft)	Tc (min)	STREET / CHANNEL FLOW Length (ft)	Slope (%)	Velocity (fps)	Tc (min)	Tc TOTAL (min)	INTENSITY I(2) (in/hr)	I(5) (in/hr)	I(100) (in/hr)	TOTAL FLOWS Q(2) (cfs)	Q(5) (cfs)	Q(100) (cfs)
EX-1	2.6	0.05	0.21	0.91	0.08	170	13	12.3	290	5.5%	1.6	2.9	15.2	2.80	3.50	5.87	0.1	**0.7**	**5**
EX-2	6.6	0.13	0.53	2.31	0.08	300	19	17.3	590	5.0%	1.6	6.3	23.6	2.27	2.84	4.77	0.3	**1.5**	**11**
EX-3	3.9	0.10	0.34	1.38	0.08	300	38	13.8	230	6.5%	1.8	2.1	15.9	2.74	3.43	5.76	0.3	**1.2**	**8**
EX-4	0.4	0.02	0.04	0.15	0.08	120	17	8.4					8.4	3.50	4.39	7.37	0.1	**0.2**	**1.1**
EX-5	4.3	0.17	0.43	1.57	0.08	300	24	16.1	400	5.5%	1.6	4.1	20.1	2.46	3.08	5.17	0.4	**1.3**	**8**
EX-6	6.0	0.19	0.55	2.15	0.08	300	12	20.2	350	6.0%	1.7	3.4	23.6	2.27	2.84	4.77	0.4	**2**	**10**
EX-7	2.1	0.10	0.23	0.78	0.08	280	24	15.2					15.2	2.80	3.50	5.88	0.3	**0.8**	**5**
EX-8	2.0	0.10	0.22	0.74	0.08	300	10	21.4					21.4	2.39	2.99	5.01	0.2	**0.6**	**4**

JOB NAME:	*JOHNSON ESTATES FILING NO. 1*
JOB NUMBER:	*2575.00*
DATE:	*12/10/20*
CALCULATED BY:	*MAW*

FINAL DRAINAGE REPORT ~ SURFACE ROUTING SUMMARY

Design Point(s)	Contributing Basins	Equivalent CA(5)	Equivalent CA(100)	Maximum Tc	Intensity		Flow		Outfall / Inlet Size
					I(5)	I(100)	Q(5)	Q(100)	
H1	OS-1, OS-2, EX-1 and EX-2 (24.3 AC.)	2.14	8.65	23.6	2.84	4.77	6	41	
H2	EX-3 (3.9 AC.)	0.34	1.38	15.9	3.43	5.76	1.2	8	
H3	EX-4 (0.4 AC.)	0.04	0.15	8.4	4.39	7.37	0.2	1.1	
H4	EX-7 (2.1 AC.)	0.23	0.78	15.2	3.50	5.88	0.8	5	
H5	EX-5, EX-8 (6.3 AC.)	0.64	2.31	24.1	2.81	4.71	2	11	
H6	EX-6, OS-3 (111 AC.)	9.68	39.45	45.1	1.87	3.13	18	124	

JOB NAME: *JOHNSON ESTATES FILING NO. 1*
JOB NUMBER: *2575.00*
DATE: *12/10/20*
CALCULATED BY: *MAW*

FINAL DRAINAGE REPORT ~ BASIN RUNOFF COEFFICIENT SUMMARY

		IMPERVIOUS AREA / DRIVEWAYS				LANDSCAPE/UNDEVELOPED AREAS				WEIGHTED			WEIGHTED CA		
BASIN	TOTAL AREA (AC)	AREA (AC)	C(2)	C(5)	C(100)	AREA (AC)	C(2)	C(5)	C(100)	C(2)	C(5)	C(100)	**CA(2)**	**CA(5)**	**CA(100)**
OS-1	8.6	0.14	0.89	0.90	0.96	8.46	0.02	0.08	0.35	0.03	0.09	0.36	**0.29**	**0.80**	**3.10**
OS-2	6.5	0.10	0.89	0.90	0.96	6.40	0.02	0.08	0.35	0.03	0.09	0.36	**0.22**	**0.60**	**2.34**
OS-3	105.0	0.90	0.89	0.90	0.96	104.10	0.02	0.08	0.35	0.03	0.09	0.36	**2.88**	**9.14**	**37.30**
A	2.6	0.10	0.89	0.90	0.96	2.50	0.02	0.08	0.35	0.05	0.11	0.37	**0.14**	**0.29**	**0.97**
B1	5.0	0.10	0.89	0.90	0.96	4.90	0.02	0.08	0.35	0.04	0.10	0.36	**0.19**	**0.48**	**1.81**
B2	1.6	0.08	0.89	0.90	0.96	1.52	0.02	0.08	0.35	0.06	0.12	0.38	**0.10**	**0.19**	**0.61**
C	3.6	0.00	0.89	0.90	0.96	3.60	0.02	0.08	0.35	0.02	0.08	0.35	**0.07**	**0.29**	**1.26**
D	0.3	0.09	0.89	0.90	0.96	0.21	0.02	0.08	0.35	0.28	0.33	0.53	**0.08**	**0.10**	**0.16**
E	0.4	0.01	0.89	0.90	0.96	0.39	0.02	0.08	0.35	0.04	0.10	0.37	**0.02**	**0.04**	**0.15**
F	2.6	0.39	0.89	0.90	0.96	2.21	0.02	0.08	0.35	0.15	0.20	0.44	**0.39**	**0.53**	**1.15**
G	7.6	0.20	0.89	0.90	0.96	7.40	0.02	0.08	0.35	0.04	0.10	0.37	**0.33**	**0.77**	**2.78**
H	2.1	0.07	0.89	0.90	0.96	2.03	0.02	0.08	0.35	0.05	0.11	0.37	**0.10**	**0.23**	**0.78**
I	2.0	0.07	0.89	0.90	0.96	1.93	0.02	0.08	0.35	0.05	0.11	0.37	**0.10**	**0.22**	**0.74**

JOB NAME:	*JOHNSON ESTATES FILING NO. 1*
JOB NUMBER:	*2575.00*
DATE:	*12/10/20*
CALC'D BY:	*MAW*

$$t_i = \frac{0.395(1.1 - C_5)\sqrt{L}}{S^{0.33}}$$

$$V = C_v S_w^{0.5}$$

Tc=L/V

Table 6-7. Conveyance Coefficient, C_v

Type of Land Surface	C_v
Heavy meadow	2.5
Tillage/field	5
Riprap (not buried)*	6.5
Short pasture and lawns	7
Nearly bare ground	10
Grassed waterway	15
Paved areas and shallow paved swales	20

$$t_c = \frac{L}{180} + 10$$

*For buried riprap, select C_v value based on type of vegetative cover.

FINAL DRAINAGE REPORT ~ BASIN RUNOFF SUMMARY

BASIN	TOTAL AREA (AC)	WEIGHTED CA(2)	CA(5)	CA(100)	OVERLAND C(5)	Length (ft)	Height (ft)	Tc (min)	STREET / CHANNEL FLOW Length (ft)	Slope (%)	Velocity (fps)	Tc (min)	Tc TOTAL (min)	INTENSITY I(2) (in/hr)	I(5) (in/hr)	I(100) (in/hr)	TOTAL FLOWS Q(2) (cfs)	Q(5) (cfs)	Q(100) (cfs)
OS-1	8.6	0.29	0.80	3.10	0.08	300	20	17.1	200	6.0%	1.7	1.9	19.0	2.53	3.17	5.32	0.7	3	16
OS-2	6.5	0.22	0.60	2.34	0.08	300	19	17.3	270	5.5%	1.6	2.7	20.1	2.46	3.08	5.17	0.5	2	12
OS-3	105	2.88	9.14	37.30	0.08	300	18	17.7	2300	5.0%	1.6	24.5	42.1	1.58	1.97	3.31	5	18	123
A	2.6	0.14	0.29	0.97	0.08	170	13	12.3	290	5.5%	1.6	2.9	15.2	2.80	3.50	5.87	0.4	1.0	6
B1	5.0	0.19	0.48	1.81	0.08	300	19	17.3	590	5.0%	1.6	6.3	23.6	2.27	2.84	4.77	0.4	1	9
B2	1.6	0.10	0.19	0.61	0.08	210	30	11.1	100	10.0%	2.2	0.8	11.8	3.09	3.87	6.50	0.3	1	4
C	3.6	0.07	0.29	1.26	0.08	300	38	13.8	230	6.5%	1.8	2.1	15.9	2.74	3.43	5.76	0.2	1.0	7
D	0.3	0.08	0.10	0.16	0.08	140	22	8.8					8.8	3.45	4.32	7.26	0.3	0.4	1.2
E	0.4	0.02	0.04	0.15	0.08	120	17	8.4					8.4	3.50	4.39	7.37	0.1	0.2	1.1
F	2.6	0.39	0.53	1.15	0.08	300	26	15.6	320	3.8%	1.4	3.9	19.5	2.50	3.12	5.24	1.0	2	6
G	7.6	0.33	0.77	2.78	0.08	300	12	20.2	350	6.0%	2.4	2.4	22.6	2.33	2.91	4.88	0.8	2	14
H	2.1	0.10	0.23	0.78	0.08	280	24	15.2					15.2	2.80	3.50	5.88	0.3	0.8	5
I	2.0	0.10	0.22	0.74	0.08	300	10	21.4					21.4	2.39	2.99	5.01	0.2	0.6	4

JOB NAME:	*JOHNSON ESTATES FILING NO. 1*
JOB NUMBER:	*2575.00*
DATE:	*12/10/20*
CALCULATED BY:	*MAW*

FINAL DRAINAGE REPORT ~ SURFACE ROUTING SUMMARY

Design Point(s)	Contributing Basins	Equivalent CA(5)	Equivalent CA(100)	Maximum Tc	Intensity		Flow		Outfall / Inlet Size
					I(5)	I(100)	Q(5)	Q(100)	
D1	OS-1, OS-2, A, B1, B2 (24.3 AC.)	2.37	8.82	24.6	2.78	4.66	7	41	
D2	C and D (3.9 AC.)	0.39	1.42	15.9	3.43	5.76	1.3	8	
D3	E (0.4 AC.)	0.04	0.15	8.4	4.39	7.37	0.2	1.1	
D4	H (2.1 AC.)	0.23	0.78	15.2	3.50	5.88	0.8	5	
D5	F and I (4.6 AC.)	0.75	1.89	23.5	2.84	4.77	2	9	
D6	G and OS-3 (112.6 AC.)	9.91	40.08	45.8	1.84	3.10	18	124	

Determination of Culvert Headwater and Outlet Protection

Project: JOHNSON ESTATES FILING NO. 1
Basin ID: DRIVEWAY CULVERT (LOT 2)

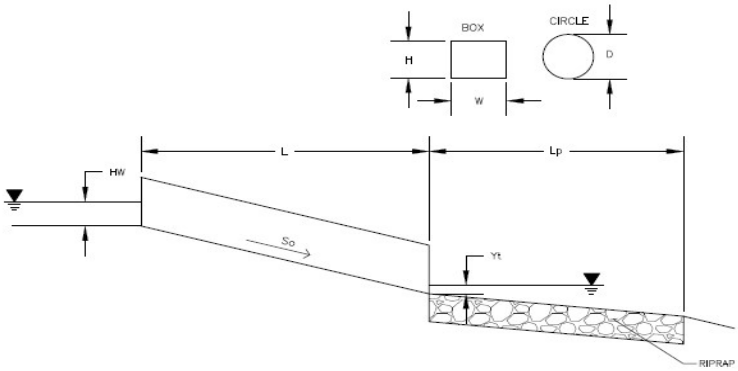

Soil Type:
Choose One:
(●) Sandy
( ) Non-Sandy

Supercritical Flow! Using Da to calculate protection type.

Design Information (Input):

Design Discharge	Q =	21	cfs
Circular Culvert:			
Barrel Diameter in Inches	D =	18	inches
Inlet Edge Type (Choose from pull-down list)	Grooved End Projection		
Box Culvert:		**OR**	
Barrel Height (Rise) in Feet	Height (Rise) =		ft
Barrel Width (Span) in Feet	Width (Span) =		ft
Inlet Edge Type (Choose from pull-down list)	1.5 : 1 Bevel w/ 18-34 Deg. Flared Wingwall		
Number of Barrels	No =	2	
Inlet Elevation	Elev IN =	7277.5	ft
Outlet Elevation **OR** Slope	Elev OUT =	7277	ft
Culvert Length	L =	20	ft
Manning's Roughness	n =	0.013	
Bend Loss Coefficient	k_b =	0	
Exit Loss Coefficient	k_x =	1	
Tailwater Surface Elevation	Elev Y_t =		ft
Max Allowable Channel Velocity	V =	5	ft/s

Required Protection (Output):

Tailwater Surface Height	Y_t =	0.60	ft
Flow Area at Max Channel Velocity	A_t =	2.10	ft^2
Culvert Cross Sectional Area Available	A =	1.77	ft^2
Entrance Loss Coefficient	k_e =	0.20	
Friction Loss Coefficient	k_f =	0.36	
Sum of All Losses Coefficients	k_s =	1.56	ft
Culvert Normal Depth	Y_n =	0.86	ft
Culvert Critical Depth	Y_c =	1.25	ft
Tailwater Depth for Design	d =	1.37	ft
Adjusted Diameter **OR** Adjusted Rise	D_a =	1.18	ft
Expansion Factor	1/(2*tan(Θ)) =	5.16	
Flow/Diameter$^{2.5}$ **OR** Flow/(Span * Rise$^{1.5}$)	Q/D^2.5 =	3.81	$ft^{0.5}/s$
Froude Number	Fr =	2.08	**Supercritical!**
Tailwater/Adjusted Diameter **OR** Tailwater/Adjusted Rise	Yt/D =	0.51	
Inlet Control Headwater	HW_I =	2.13	ft
Outlet Control Headwater	HW_O =	1.73	
Design Headwater Elevation	**HW =**	**7,279.63**	**ft**
Headwater/Diameter OR Headwater/Rise Ratio	**HW/D =**	**1.42**	
Minimum Theoretical Riprap Size	d_{50} =	5	in
Nominal Riprap Size	d_{50} =	6	in
UDFCD Riprap Type	**Type =**	**VL**	
Length of Protection	**L_p =**	**11**	**ft**
Width of Protection	**T =**	**4**	**ft**

Determination of Culvert Headwater and Outlet Protection

Project: JOHNSON ESTATES FILING NO. 1
Basin ID: DRIVEWAY CULVERT (LOT 3)

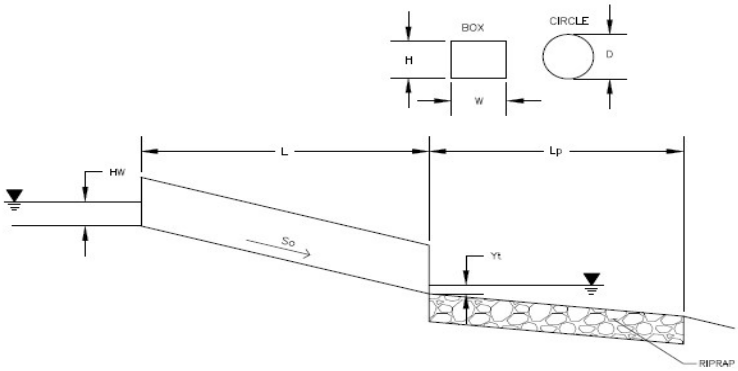

Soil Type:
Choose One:
(●) Sandy
( ) Non-Sandy

Supercritical Flow! Using Da to calculate protection type.

Design Information (Input):

Design Discharge	Q =	20	cfs
Circular Culvert:			
Barrel Diameter in Inches	D =	18	inches
Inlet Edge Type (Choose from pull-down list)	Grooved End Projection		
Box Culvert:		**OR**	
Barrel Height (Rise) in Feet	Height (Rise) =		ft
Barrel Width (Span) in Feet	Width (Span) =		ft
Inlet Edge Type (Choose from pull-down list)	1.5 : 1 Bevel w/ 18-34 Deg. Flared Wingwall		
Number of Barrels	No =	2	
Inlet Elevation	Elev IN =	7288.5	ft
Outlet Elevation **OR** Slope	Elev OUT =	7288	ft
Culvert Length	L =	20	ft
Manning's Roughness	n =	0.013	
Bend Loss Coefficient	k_b =	0	
Exit Loss Coefficient	k_x =	1	
Tailwater Surface Elevation	Elev Y_t =		ft
Max Allowable Channel Velocity	V =	5	ft/s

Required Protection (Output):

Tailwater Surface Height	Y_t =	0.60	ft
Flow Area at Max Channel Velocity	A_t =	2.00	ft^2
Culvert Cross Sectional Area Available	A =	1.77	ft^2
Entrance Loss Coefficient	k_e =	0.20	
Friction Loss Coefficient	k_f =	0.36	
Sum of All Losses Coefficients	k_s =	1.56	ft
Culvert Normal Depth	Y_n =	0.84	ft
Culvert Critical Depth	Y_c =	1.22	ft
Tailwater Depth for Design	d =	1.36	ft
Adjusted Diameter **OR** Adjusted Rise	D_a =	1.17	ft
Expansion Factor	1/(2*tan(Θ)) =	5.40	
Flow/Diameter$^{2.5}$ **OR** Flow/(Span * Rise$^{1.5}$)	Q/D^2.5 =	3.63	$ft^{0.5}/s$
Froude Number	Fr =	2.10	**Supercritical!**
Tailwater/Adjusted Diameter **OR** Tailwater/Adjusted Rise	Yt/D =	0.51	
Inlet Control Headwater	HW_I =	2.03	ft
Outlet Control Headwater	HW_O =	1.64	
Design Headwater Elevation	**HW =**	**7,290.53**	**ft**
Headwater/Diameter OR Headwater/Rise Ratio	**HW/D =**	**1.35**	
Minimum Theoretical Riprap Size	d_{50} =	5	in
Nominal Riprap Size	d_{50} =	6	in
UDFCD Riprap Type	**Type =**	**VL**	
Length of Protection	**L_p =**	**10**	**ft**
Width of Protection	**T =**	**4**	**ft**

Description

A sediment basin is a temporary pond built on a construction site to capture eroded or disturbed soil transported in storm runoff prior to discharge from the site. Sediment basins are designed to capture site runoff and slowly release it to allow time for settling of sediment prior to discharge. Sediment basins are often constructed in locations that will later be modified to serve as post-construction stormwater basins.

Photograph SB-1. Sediment basin at the toe of a slope. Photo courtesy of WWE.

Appropriate Uses

Most large construction sites (typically greater than 2 acres) will require one or more sediment basins for effective management of construction site runoff. On linear construction projects, sediment basins may be impractical; instead, sediment traps or other combinations of BMPs may be more appropriate.

Sediment basins should not be used as stand-alone sediment controls. Erosion and other sediment controls should also be implemented upstream.

When feasible, the sediment basin should be installed in the same location where a permanent post-construction detention pond will be located.

Design and Installation

The design procedure for a sediment basin includes these steps:

- **Basin Storage Volume**: Provide a storage volume of at least 3,600 cubic feet per acre of drainage area. To the extent practical, undisturbed and/or off-site areas should be diverted around sediment basins to prevent "clean" runoff from mixing with runoff from disturbed areas. For undisturbed areas (both on-site and off-site) that cannot be diverted around the sediment basin, provide a minimum of 500 ft^3/acre of storage for undeveloped (but stable) off-site areas in addition to the 3,600 ft^3/acre for disturbed areas. For stable, developed areas that cannot be diverted around the sediment basin, storage volume requirements are summarized in Table SB-1.

- **Basin Geometry:** Design basin with a minimum length-to-width ratio of 2:1 (L:W). If this cannot be achieved because of site space constraints, baffling may be required to extend the effective distance between the inflow point(s) and the outlet to minimize short-circuiting.

- **Dam Embankment**: It is recommended that embankment slopes be 4:1 (H:V) or flatter and no steeper than 3:1 (H:V) in any location.

Sediment Basins	
Functions	
Erosion Control	No
Sediment Control	Yes
Site/Material Management	No

- **Inflow Structure**: For concentrated flow entering the basin, provide energy dissipation at the point of inflow.

Table SB-1. Additional Volume Requirements for Undisturbed and Developed Tributary Areas Draining through Sediment Basins

Imperviousness (%)	Additional Storage Volume (ft^3) Per Acre of Tributary Area
Undeveloped	500
10	800
20	1230
30	1600
40	2030
50	2470
60	2980
70	3560
80	4360
90	5300
100	6460

- **Outlet Works**: The outlet pipe shall extend through the embankment at a minimum slope of 0.5 percent. Outlet works can be designed using one of the following approaches:
  - **Riser Pipe (Simplified Detail):** Detail SB-1 provides a simplified design for basins treating no more than 15 acres.
  - **Orifice Plate or Riser Pipe**: Follow the design criteria for Full Spectrum Detention outlets in the EDB Fact Sheet provided in Chapter 4 of this manual for sizing of outlet perforations with an emptying time of approximately 72 hours. In lieu of the trash rack, pack uniformly sized 1½ - to 2-inch gravel in front of the plate or surrounding the riser pipe. This gravel will need to be cleaned out frequently during the construction period as sediment accumulates within it. The gravel pack will need to be removed and disposed of following construction to reclaim the basin for use as a permanent detention facility. If the basin will be used as a permanent extended detention basin for the site, a trash rack will need to be installed once contributing drainage areas have been stabilized and the gravel pack and accumulated sediment have been removed.
  - **Floating Skimmer**: If a floating skimmer is used, install it using manufacturer's recommendations. Illustration SB-1 provides an illustration of a Faircloth Skimmer Floating Outlet™, one of the more commonly used floating skimmer outlets. A skimmer should be designed to release the design volume in no less than 48 hours. The use of a floating skimmer outlet can increase the sediment capture efficiency of a basin significantly. A floating outlet continually decants cleanest water off the surface of the pond and releases cleaner water than would discharge from a perforated riser pipe or plate.

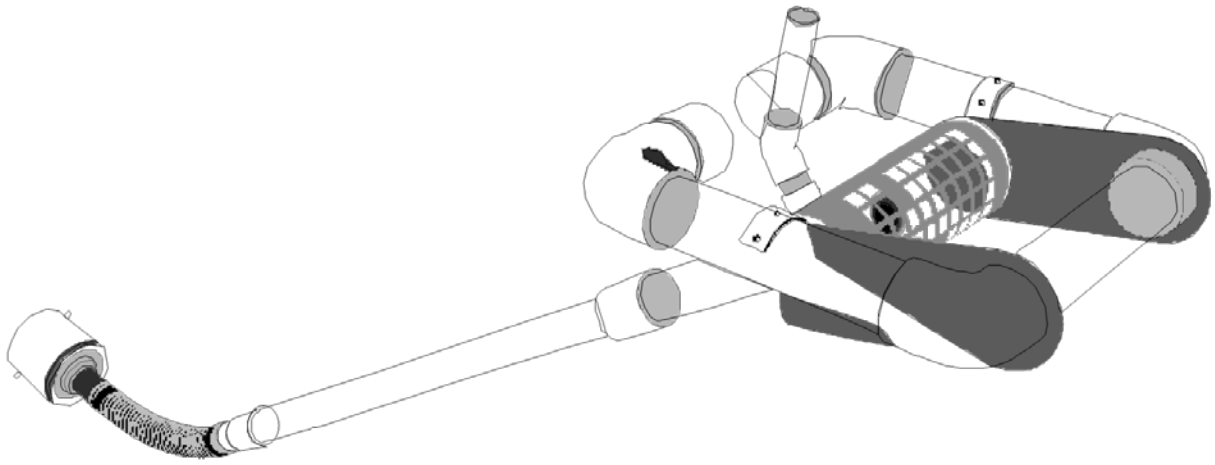

Illustration SB-1. Outlet structure for a temporary sediment basin - Faircloth Skimmer Floating Outlet. Illustration courtesy of J. W. Faircloth & Sons, Inc., FairclothSkimmer.com.

- **Outlet Protection and Spillway:** Consider all flow paths for runoff leaving the basin, including protection at the typical point of discharge as well as overtopping.
  - **Outlet Protection:** Outlet protection should be provided where the velocity of flow will exceed the maximum permissible velocity of the material of the waterway into which discharge occurs. This may require the use of a riprap apron at the outlet location and/or other measures to keep the waterway from eroding.
  - **Emergency Spillway:** Provide a stabilized emergency overflow spillway for rainstorms that exceed the capacity of the sediment basin volume and its outlet. Protect basin embankments from erosion and overtopping. If the sediment basin will be converted to a permanent detention basin, design and construct the emergency spillway(s) as required for the permanent facility. If the sediment basin will not become a permanent detention basin, it may be possible to substitute a heavy polyvinyl membrane or properly bedded rock cover to line the spillway and downstream embankment, depending on the height, slope, and width of the embankments.

Maintenance and Removal

Maintenance activities include the following:

- Dredge sediment from the basin, as needed to maintain BMP effectiveness, typically when the design storage volume is no more than one-third filled with sediment.
- Inspect the sediment basin embankments for stability and seepage.
- Inspect the inlet and outlet of the basin, repair damage, and remove debris. Remove, clean and replace the gravel around the outlet on a regular basis to remove the accumulated sediment within it and keep the outlet functioning.
- Be aware that removal of a sediment basin may require dewatering and associated permit requirements.
- Do not remove a sediment basin until the upstream area has been stabilized with vegetation.

Final disposition of the sediment basin depends on whether the basin will be converted to a permanent post-construction stormwater basin or whether the basin area will be returned to grade. For basins being converted to permanent detention basins, remove accumulated sediment and reconfigure the basin and outlet to meet the requirements of the final design for the detention facility. If the sediment basin is not to be used as a permanent detention facility, fill the excavated area with soil and stabilize with vegetation.

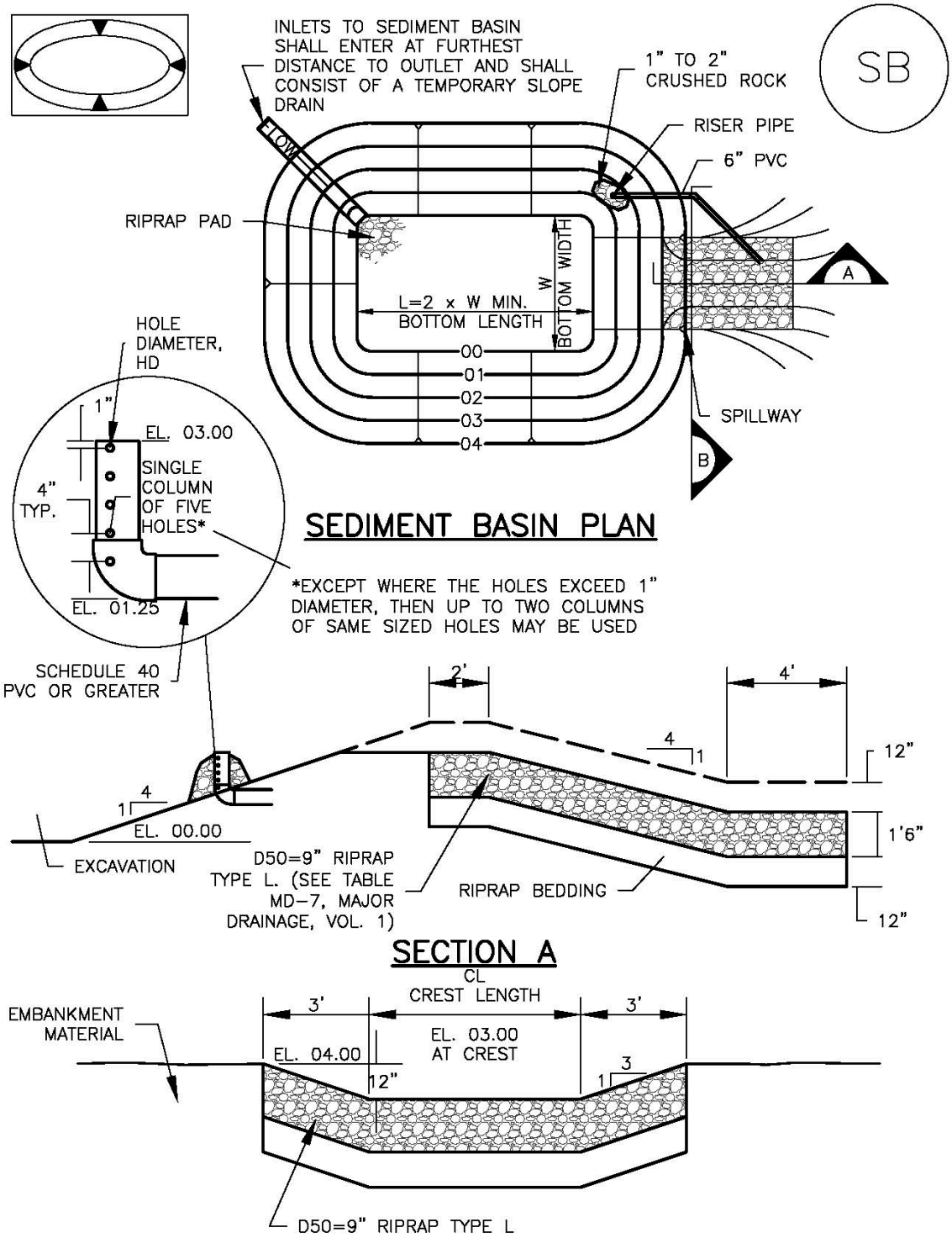
SB
INLETS TO SEDIMENT BASIN SHALL ENTER AT FURTHEST DISTANCE TO OUTLET AND SHALL CONSIST OF A TEMPORARY SLOPE DRAIN
FLOW
1" TO 2" CRUSHED ROCK
RISER PIPE
6" PVC
RIPRAP PAD
L=2 x W MIN.
BOTTOM LENGTH
W
BOTTOM WIDTH
00
01
02
03
04
A
B
SPILLWAY
SEDIMENT BASIN PLAN
HOLE DIAMETER, HD
1"
EL. 03.00
SINGLE COLUMN OF FIVE HOLES*
4" TYP.
EL. 01.25
*EXCEPT WHERE THE HOLES EXCEED 1" DIAMETER, THEN UP TO TWO COLUMNS OF SAME SIZED HOLES MAY BE USED
SCHEDULE 40 PVC OR GREATER
2'
4'
4
1
12"
1'6"
12"
EL. 00.00
EXCAVATION
D50=9" RIPRAP TYPE L. (SEE TABLE MD-7, MAJOR DRAINAGE, VOL. 1)
RIPRAP BEDDING
SECTION A
CL
CREST LENGTH
3'
3'
EMBANKMENT MATERIAL
EL. 04.00
EL. 03.00 AT CREST
12"
3
1
D50=9" RIPRAP TYPE L

TABLE SB–1. SIZING INFORMATION FOR STANDARD SEDIMENT BASIN			
Upstream Drainage Area (rounded to nearest acre), (ac)	Basin Bottom Width (W), (ft)	Spillway Crest Length (CL), (ft)	Hole Diameter (HD), (in)
1	12 ½	2	9/32
2	21	3	13/16
3	28	5	½
4	33 ½	6	9/16
5	38 ½	8	21/32
6	43	9	21/32
7	47 ¼	11	25/32
8	51	12	27/32
9	55	13	7/8
10	58 ¼	15	15/16
11	61	16	31/32
12	64	18	1
13	67 ½	19	1 1/16
14	70 ½	21	1 1/8
15	73 ¼	22	1 3/16

SEDIMENT BASIN INSTALLATION NOTES

1. SEE PLAN VIEW FOR:
   - LOCATION OF SEDIMENT BASIN.
   - TYPE OF BASIN (STANDARD BASIN OR NONSTANDARD BASIN).
   - FOR STANDARD BASIN, BOTTOM WIDTH W, CREST LENGTH CL, AND HOLE DIAMETER, HD.
   - FOR NONSTANDARD BASIN, SEE CONSTRUCTION DRAWINGS FOR DESIGN OF BASIN INCLUDING RISER HEIGHT H, NUMBER OF COLUMNS N, HOLE DIAMETER HD AND PIPE DIAMETER D.

2. FOR STANDARD BASIN, BOTTOM DIMENSION MAY BE MODIFIED AS LONG AS BOTTOM AREA IS NOT REDUCED.

3. SEDIMENT BASINS SHALL BE INSTALLED PRIOR TO ANY OTHER LAND–DISTURBING ACTIVITY THAT RELIES ON ON BASINS AS AS A STORMWATER CONTROL.

4. EMBANKMENT MATERIAL SHALL CONSIST OF SOIL FREE OF DEBRIS, ORGANIC MATERIAL, AND ROCKS OR CONCRETE GREATER THAN 3 INCHES AND SHALL HAVE A MINIMUM OF 15 PERCENT BY WEIGHT PASSING THE NO. 200 SIEVE.

5. EMBANKMENT MATERIAL SHALL BE COMPACTED TO AT LEAST 95 PERCENT OF MAXIMUM DENSITY IN ACCORDANCE WITH ASTM D698.

6. PIPE SCH 40 OR GREATER SHALL BE USED.

7. THE DETAILS SHOWN ON THESE SHEETS PERTAIN TO STANDARD SEDIMENT BASIN(S) FOR DRAINAGE AREAS LESS THAN 15 ACRES. SEE CONSTRUCTION DRAWINGS FOR EMBANKMENT, STORAGE VOLUME, SPILLWAY, OUTLET, AND OUTLET PROTECTION DETAILS FOR ANY SEDIMENT BASIN(S) THAT HAVE BEEN INDIVIDUALLY DESIGNED FOR DRAINAGE AREAS LARGER THAN 15 ACRES.

SEDIMENT BASIN MAINTENANCE NOTES

1. INSPECT BMPs EACH WORKDAY, AND MAINTAIN THEM IN EFFECTIVE OPERATING CONDITION. MAINTENANCE OF BMPs SHOULD BE PROACTIVE, NOT REACTIVE. INSPECT BMPs AS SOON AS POSSIBLE (AND ALWAYS WITHIN 24 HOURS) FOLLOWING A STORM THAT CAUSES SURFACE EROSION, AND PERFORM NECESSARY MAINTENANCE.

2. FREQUENT OBSERVATIONS AND MAINTENANCE ARE NECESSARY TO MAINTAIN BMPs IN EFFECTIVE OPERATING CONDITION. INSPECTIONS AND CORRECTIVE MEASURES SHOULD BE DOCUMENTED THOROUGHLY.

3. WHERE BMPs HAVE FAILED, REPAIR OR REPLACEMENT SHOULD BE INITIATED UPON DISCOVERY OF THE FAILURE.

4. SEDIMENT ACCUMULATED IN BASIN SHALL BE REMOVED AS NEEDED TO MAINTAIN BMP EFFECTIVENESS, TYPICALLY WHEN SEDIMENT DEPTH REACHES ONE FOOT (I.E., TWO FEET BELOW THE SPILLWAY CREST).

5. SEDIMENT BASINS ARE TO REMAIN IN PLACE UNTIL THE UPSTREAM DISTURBED AREA IS STABILIZED AND GRASS COVER IS ACCEPTED BY THE LOCAL JURISDICTION.

6. WHEN SEDIMENT BASINS ARE REMOVED, ALL DISTURBED AREAS SHALL BE COVERED WITH TOPSOIL, SEEDED AND MULCHED OR OTHERWISE STABILIZED AS APPROVED BY LOCAL JURISDICTION.

(DETAILS ADAPTED FROM DOUGLAS COUNTY, COLORADO)

NOTE: MANY JURISDICTIONS HAVE BMP DETAILS THAT VARY FROM UDFCD STANDARD DETAILS. CONSULT WITH LOCAL JURISDICTIONS AS TO WHICH DETAIL SHOULD BE USED WHEN DIFFERENCES ARE NOTED.

DRAINAGE MAPS

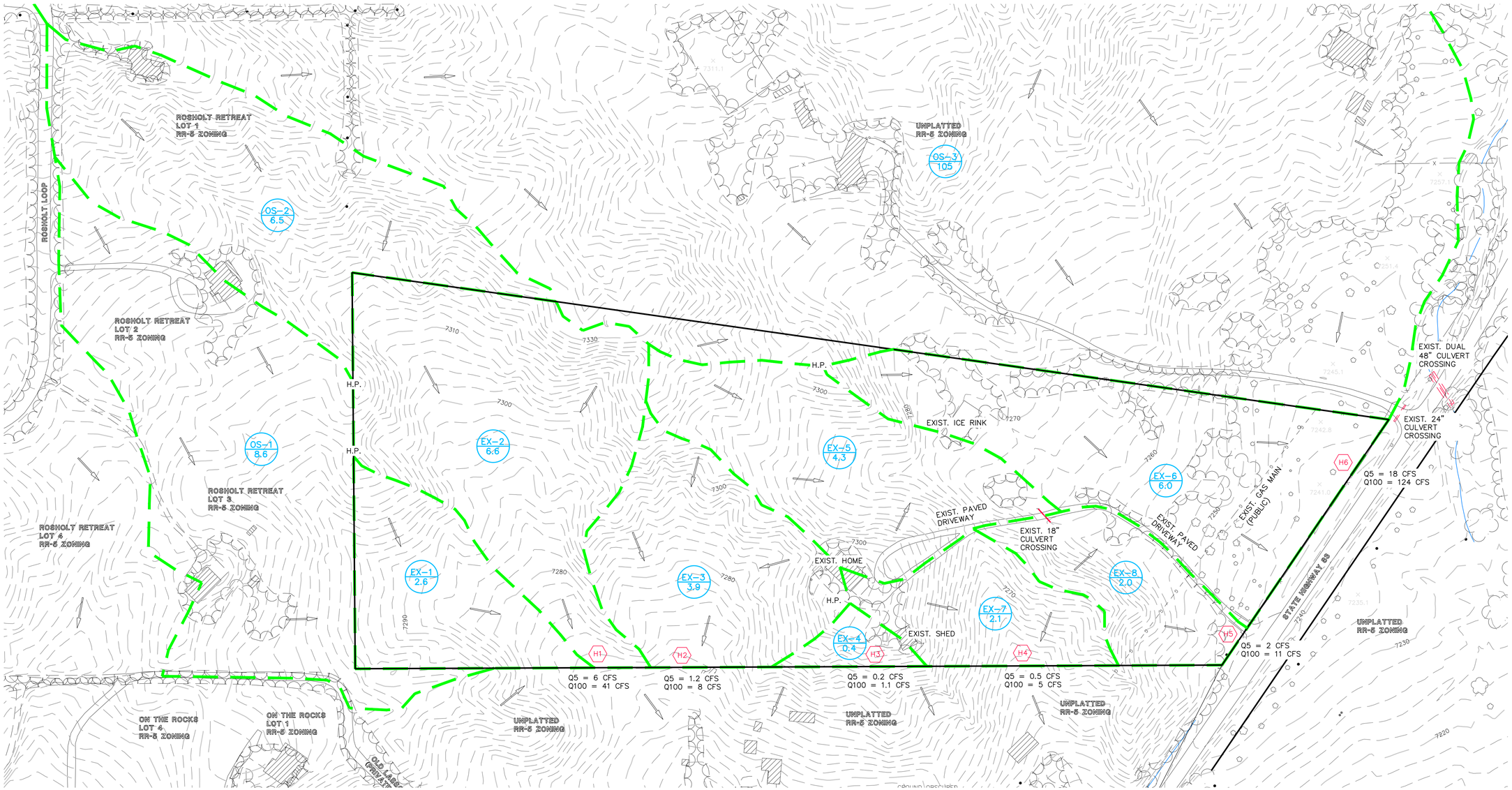

FINAL DRAINAGE REPORT ~ BASIN RUNOFF COEFFICIENT SUMMARY

		IMPERVIOUS AREA / DRIVEWAYS				LANDSCAPE/UNDEVELOPED AREAS				WEIGHTED			WEIGHTED CA		
BASIN	TOTAL AREA (AC)	AREA (AC)	C(2)	C(5)	C(100)	AREA (AC)	C(2)	C(5)	C(100)	C(2)	C(5)	C(100)	CA(2)	CA(5)	CA(100)
EX-1	2.6	0.00	0.89	0.90	0.96	2.60	0.02	0.08	0.35	0.02	0.08	0.35	**0.05**	**0.21**	**0.91**
EX-2	6.6	0.00	0.89	0.90	0.96	6.60	0.02	0.08	0.35	0.02	0.08	0.35	**0.13**	**0.53**	**2.31**
EX-3	3.9	0.03	0.89	0.90	0.96	3.87	0.02	0.08	0.35	0.03	0.09	0.35	**0.10**	**0.34**	**1.38**
EX-4	0.4	0.01	0.89	0.90	0.96	0.39	0.02	0.08	0.35	0.04	0.10	0.37	**0.02**	**0.04**	**0.15**
EX-5	4.3	0.10	0.89	0.90	0.96	4.20	0.02	0.08	0.35	0.04	0.10	0.36	**0.17**	**0.43**	**1.57**
EX-6	6.0	0.08	0.89	0.90	0.96	5.92	0.02	0.08	0.35	0.03	0.09	0.36	**0.19**	**0.55**	**2.15**
EX-7	2.1	0.07	0.89	0.90	0.96	2.03	0.02	0.08	0.35	0.05	0.11	0.37	**0.10**	**0.23**	**0.78**
EX-8	2.0	0.07	0.89	0.90	0.96	1.93	0.02	0.08	0.35	0.05	0.11	0.37	**0.10**	**0.22**	**0.74**

FINAL DRAINAGE REPORT ~ BASIN RUNOFF SUMMARY

		WEIGHTED			OVERLAND				STREET / CHANNEL FLOW				Tc	INTENSITY			TOTAL FLOWS		
BASIN	TOTAL AREA (AC)	CA(2)	CA(5)	CA(100)	C(5)	Length (ft)	Height (ft)	Tc (min)	Length (ft)	Slope (%)	Velocity (fps)	Tc (min)	TOTAL (min)	I(2) (in/hr)	I(5) (in/hr)	I(100) (in/hr)	Q(2) (cfs)	Q(5) (cfs)	Q(100) (cfs)
EX-1	2.6	0.05	0.21	0.91	0.08	170	13	12.3	290	5.5%	1.6	2.9	15.2	2.80	3.50	5.87	0.1	**0.7**	**5**
EX-2	6.6	0.13	0.53	2.31	0.08	300	19	17.3	590	5.0%	1.6	6.3	23.6	2.27	2.84	4.77	0.3	**1.5**	**11**
EX-3	3.9	0.10	0.34	1.38	0.08	300	38	13.8	230	6.5%	1.8	2.1	15.9	2.74	3.43	5.76	0.3	**1.2**	**8**
EX-4	0.4	0.02	0.04	0.15	0.08	120	17	8.4					8.4	3.50	4.39	7.37	0.1	**0.2**	**1.1**
EX-5	4.3	0.17	0.43	1.57	0.08	300	24	16.1	400	5.5%	1.6	4.1	20.1	2.46	3.08	5.17	0.4	**1.3**	**8**
EX-6	6.0	0.19	0.55	2.15	0.08	300	12	20.2	350	6.0%	1.7	3.4	23.6	2.27	2.84	4.77	0.4	**2**	**10**
EX-7	2.1	0.10	0.23	0.78	0.08	280	24	15.2					15.2	2.80	3.50	5.88	0.3	**0.8**	**5**
EX-8	2.0	0.10	0.22	0.74	0.08	300	10	21.4					21.4	2.39	2.99	5.01	0.2	**0.6**	**4**

FINAL DRAINAGE REPORT ~ SURFACE ROUTING SUMMARY

					Intensity		Flow		
Design Point(s)	Contributing Basins	Equivalent CA(5)	Equivalent CA(100)	Maximum Tc	I(5)	I(100)	Q(5)	Q(100)	Outfall / Inlet Size
H1	OS-1, OS-2, EX-1 and EX-2 (24.3 AC.)	2.14	8.65	23.6	2.84	4.77	6	41	
H2	EX-3 (3.9 AC.)	0.34	1.38	15.9	3.43	5.76	1.2	8	
H3	EX-4 (0.4 AC.)	0.04	0.15	8.4	4.39	7.37	0.2	1.1	
H4	EX-7 (2.1 AC.)	0.23	0.78	15.2	3.50	5.88	0.8	5	
H5	EX-5, EX-8 (6.3 AC.)	0.64	2.31	24.1	2.81	4.71	2	11	
H6	EX-6, OS-3 (11.1 AC.)	9.68	39.45	45.1	1.87	3.13	18	124	

LEGEND

DESCRIPTION	SYMBOL
EXISTING GROUND CONTOUR	6910
BASIN BOUNDARY	
EXIST./PROP. STORM SEWER	
PROPERTY BOUNDARY	
BASIN IDENTIFIER / AREA IN ACRES	H-1 / 10.0
DESIGN POINT	D2
EXISTING TREES / SHRUBS	
EXISTING FORESTED AREA OUTLINE	

N

100 50 0 100 200

SCALE: 1" = 100'

CLASSIC CONSULTING
619 N. Cascade Avenue, Suite 200
Colorado Springs, Colorado 80903
(719)785-0790
(719)785-0799 (Fax)

JOHNSON ESTATES FILING NO. 1
FINAL DRAINAGE REPORT
PRE-DEVELOPED DRAINAGE MAP

DESIGNED BY	MAW	SCALE		DATE	12-10-20
DRAWN BY	MAW	(H) 1"= 100'		SHEET	1 OF 2
CHECKED BY		(V) 1"= N/A		JOB NO.	2575.00

N:\2575000\REPORTS\FDR\2575000NM.dwg, 12/17/2020 11:57:21 AM, 1:1

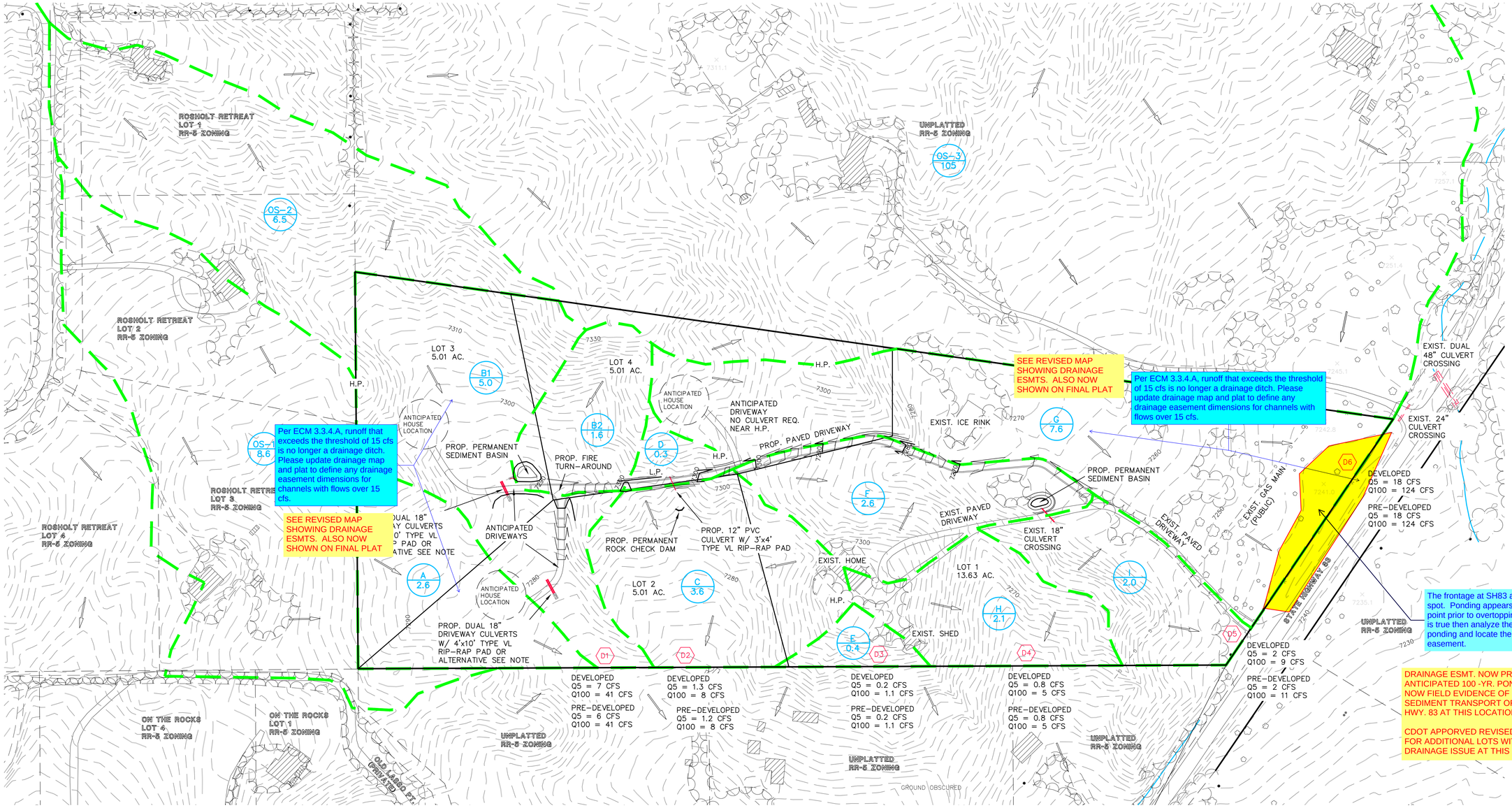

Per ECM 3.3.4.A, runoff that exceeds the threshold of 15 cfs is no longer a drainage ditch. Please update drainage map and plat to define any drainage easement dimensions for channels with flows over 15 cfs.

SEE REVISED MAP SHOWING DRAINAGE ESMTS. ALSO NOW SHOWN ON FINAL PLAT

Per ECM 3.3.4.A, runoff that exceeds the threshold of 15 cfs is no longer a drainage ditch. Please update drainage map and plat to define any drainage easement dimensions for channels with flows over 15 cfs.

SEE REVISED MAP SHOWING DRAINAGE ESMTS. ALSO NOW SHOWN ON FINAL PLAT

The frontage at SH83 appears to be a low spot. Ponding appears to occur at this design point prior to overtopping SH83. If assumption is true then analyze the limits of the 100 year ponding and locate the area within a drainage easement.

DRAINAGE ESMT. NOW PROVIDED FOR ANTICIPATED 100 -YR. PONDING. HOWEVER, NOW FIELD EVIDENCE OF EROSION, SEDIMENT TRANSPORT OR OVERTOPPING OF HWY. 83 AT THIS LOCATION.

CDOT APPORVED REVISED ACCESS PERMIT FOR ADDITIONAL LOTS WITH NO CONCERN OF DRAINAGE ISSUE AT THIS LOCATION.

FINAL DRAINAGE REPORT ~ BASIN RUNOFF COEFFICIENT SUMMARY

BASIN	TOTAL AREA (AC)	IMPERVIOUS AREA / DRIVEWAYS				LANDSCAPE/UNDEVELOPED AREAS				WEIGHTED			WEIGHTED CA		
		AREA (AC)	C(2)	C(5)	C(100)	AREA (AC)	C(2)	C(5)	C(100)	C(2)	C(5)	C(100)	CA(2)	CA(5)	CA(100)
OS-1	8.6	0.14	0.89	0.90	0.96	8.46	0.02	0.08	0.35	0.03	0.09	0.36	**0.29**	**0.80**	**3.10**
OS-2	6.5	0.10	0.89	0.90	0.96	6.40	0.02	0.08	0.35	0.03	0.09	0.36	**0.22**	**0.60**	**2.34**
OS-3	105.0	0.90	0.89	0.90	0.96	104.10	0.02	0.08	0.35	0.03	0.09	0.36	**2.88**	**9.14**	**37.30**
A	2.6	0.10	0.89	0.90	0.96	2.50	0.02	0.08	0.35	0.05	0.11	0.37	**0.14**	**0.29**	**0.97**
B1	5.0	0.10	0.89	0.90	0.96	4.90	0.02	0.08	0.35	0.04	0.10	0.36	**0.19**	**0.48**	**1.81**
B2	1.6	0.08	0.89	0.90	0.96	1.52	0.02	0.08	0.35	0.06	0.12	0.38	**0.10**	**0.19**	**0.61**
C	3.6	0.00	0.89	0.90	0.96	3.60	0.02	0.08	0.35	0.02	0.08	0.35	**0.07**	**0.29**	**1.26**
D	0.3	0.09	0.89	0.90	0.96	0.21	0.02	0.08	0.35	0.28	0.33	0.53	**0.08**	**0.10**	**0.16**
E	0.4	0.01	0.89	0.90	0.96	0.39	0.02	0.08	0.35	0.04	0.10	0.37	**0.02**	**0.04**	**0.15**
F	2.6	0.39	0.89	0.90	0.96	2.21	0.02	0.08	0.35	0.15	0.20	0.44	**0.39**	**0.53**	**1.15**
G	7.6	0.20	0.89	0.90	0.96	7.40	0.02	0.08	0.35	0.04	0.10	0.37	**0.33**	**0.77**	**2.78**
H	2.1	0.07	0.89	0.90	0.96	2.03	0.02	0.08	0.35	0.05	0.11	0.37	**0.10**	**0.23**	**0.78**
I	2.0	0.07	0.89	0.90	0.96	1.93	0.02	0.08	0.35	0.05	0.11	0.37	**0.10**	**0.22**	**0.74**

FINAL DRAINAGE REPORT ~ SURFACE ROUTING SUMMARY

Design Point(s)	Contributing Basins	Equivalent CA(5)	Equivalent CA(100)	Maximum Tc	Intensity		Flow		Outfall / Inlet Size
					I(5)	I(100)	Q(5)	Q(100)	
D1	OS-1, OS-2, A, B1, B2 (24.3 AC.)	2.37	8.82	24.6	2.78	4.68	7	41	
D2	C and D (3.9 AC.)	0.39	1.42	15.9	3.43	5.76	1.3	8	
D3	E (0.4 AC.)	0.04	0.15	8.4	4.39	7.37	0.2	1.1	
D4	H (2.1 AC.)	0.23	0.78	15.2	3.50	5.88	0.8	5	
D5	F and I (4.6 AC.)	0.75	1.89	23.5	2.84	4.77	2	9	
D6	G and OS-3 (112.6 AC.)	9.91	40.08	45.8	1.84	3.10	18	124	

DRIVEWAY CULVERT NOTE:
PROPERTY OWNERS OF LOTS 2&3 MUST INSTALL DUAL CULVERTS FOR THEIR DRIVEWAY AS NOTED ABOVE OR PROVIDE ALTERNATIVE LOW WATER "TEXAS CROSSING" AND ASSUME RISK OF MINOR FLOODING OVER DRIVEWAY

FINAL DRAINAGE REPORT ~ BASIN RUNOFF SUMMARY

BASIN	TOTAL AREA (AC)	WEIGHTED			OVERLAND				STREET / CHANNEL FLOW				TC	INTENSITY			TOTAL FLOWS		
		CA(2)	CA(5)	CA(100)	C(5)	Length (ft)	Height (ft)	Tc (min)	Length (ft)	Slope (%)	Velocity (fps)	Tc (min)	TOTAL (min)	I(2) (in/hr)	I(5) (in/hr)	I(100) (in/hr)	Q(2) (cfs)	Q(5) (cfs)	Q(100) (cfs)
OS-1	8.6	0.29	0.80	3.10	0.08	300	20	17.1	200	6.0%	1.7	1.9	19.0	2.53	3.17	5.32	0.7	3	16
OS-2	6.5	0.22	0.60	2.34	0.08	300	19	17.3	270	5.5%	1.6	2.7	20.1	2.46	3.08	5.17	0.5	2	12
OS-3	105	2.88	9.14	37.30	0.08	300	18	17.7	2300	5.0%	1.6	24.5	42.1	1.58	1.97	3.31	5	18	123
A	2.6	0.14	0.29	0.97	0.08	170	13	12.3	290	5.5%	1.6	2.9	15.2	2.80	3.50	5.87	0.4	1.0	6
B1	5.0	0.19	0.48	1.81	0.08	300	19	17.3	590	5.0%	1.6	6.3	23.6	2.27	2.84	4.77	0.4	1	9
B2	1.6	0.10	0.19	0.61	0.08	210	30	11.1	100	10.0%	2.2	0.8	11.8	3.09	3.87	6.50	0.3	1	4
C	3.6	0.07	0.29	1.26	0.08	300	38	13.8	230	6.5%	1.8	2.1	15.9	2.74	3.43	5.76	0.2	1.0	7
D	0.3	0.08	0.10	0.16	0.08	140	22	8.8					8.8	3.45	4.32	7.26	0.3	0.4	1.2
E	0.4	0.02	0.04	0.15	0.08	120	17	8.4					8.4	3.50	4.39	7.37	0.1	0.2	1.1
F	2.6	0.39	0.53	1.15	0.08	300	26	15.6	320	3.8%	1.4	3.9	19.5	2.50	3.12	5.24	1.0	2	6
G	7.6	0.33	0.77	2.78	0.08	300	12	20.2	350	6.0%	2.4	2.4	22.6	2.33	2.91	4.88	0.8	2	14
H	2.1	0.10	0.23	0.78	0.08	280	24	15.2					15.2	2.80	3.50	5.88	0.3	0.8	5
I	2.0	0.10	0.22	0.74	0.08	300	10	21.4					21.4	2.39	2.99	5.01	0.2	0.6	4

LEGEND

DESCRIPTION	SYMBOL
EXISTING GROUND CONTOUR	6910
BASIN BOUNDARY	
EXIST./PROP. STORM SEWER	
PROPERTY BOUNDARY	
PROPOSED LOT LINE	
BASIN IDENTIFIER / AREA IN ACRES	H-1 / 10.0
DESIGN POINT	D2
EXISTING TREES / SHRUBS	
EXISTING FORESTED AREA OUTLINE	

N

100 50 0 100 200

SCALE: 1" = 100'

CLASSIC CONSULTING
619 N. Cascade Avenue, Suite 200
Colorado Springs, Colorado 80903
(719)785-0790
(719)785-0799 (Fax)

JOHNSON ESTATES FILING NO. 1
FINAL DRAINAGE REPORT
DEVELOPED DRAINAGE MAP

DESIGNED BY	MAW	SCALE		DATE	12-10-20
DRAWN BY	MAW	(H) 1"= 100'		SHEET	2 OF 2
CHECKED BY		(V) 1"= N/A		JOB NO.	2575.00

N:\2575.00\REPORTS\FDR\2575.00DM revised, 1/18/2021 2:10:38 PM, 1:1