PRELIMINARY & FINAL DRAINAGE REPORT

for

ABERT RANCH SUBDIVISION

Prepared for:

Hannigan and Associates, Inc.
19360 Spring Valley Road
Monument, CO 80132

March 27, 2017
Revised November 16, 2017
Revised April 5, 2019
Revised November 15, 2019
Revised April 15, 2020

Prepared by:

19 E. Willamette Avenue
Colorado Springs, CO 80903
(719)-477-9429
www.jpsengr.com

JPS Project No. 111604
PCD File No. SP-17-007 / SF-1911

ABERT RANCH SUBDIVISION
PRELIMINARY & FINAL DRAINAGE REPORT
TABLE OF CONTENTS

PAGE

EXECUTIVE SUMMARY i

DRAINAGE STATEMENT ii

I. GENERAL LOCATION AND DESCRIPTION 1

II. DRAINAGE BASINS AND SUB-BASINS 3

III. DRAINAGE DESIGN CRITERIA 4

IV. DRAINAGE PLANNING FOUR STEP PROCESS 4

V. DRAINAGE FACILITY DESIGN 5

VI. EROSION / SEDIMENT CONTROL 10

VII. COST ESTIMATE AND DRAINAGE FEES 11

VIII. SUMMARY 11

APPENDICES

APPENDIX A Hydrologic Calculations
APPENDIX B1 Hydraulic Calculations - Channels
APPENDIX B2 Hydraulic Calculations - Culverts
APPENDIX C Detention Pond Calculations
APPENDIX D Drainage Cost Estimate

APPENDIX E Figures
- Figure A1 Vicinity Map
- Figure FIRM Floodplain Map
- Sheet EX1 Historic Drainage Plan
- Sheet D1 Developed Drainage Plan
- Sheet D1.1 Enlarged Developed Drainage Plan

JPS ENGINEERING

ABERT RANCH SUBDIVISION
PRELIMINARY & FINAL DRAINAGE REPORT
EXECUTIVE SUMMARY

A. Background

- Abert Ranch is a proposed residential subdivision of a 40.4-acre parcel located northwest of Hodgen Road and Steppler Road in El Paso County.
- The proposed subdivision consists of 10 rural residential lots with 2.5-acre minimum lot sizes.
- Abert Ranch is located within the East Cherry Creek Drainage Basin, which comprises a total drainage area in excess of 30 square miles. The Abert Ranch property represents less than 0.2 percent of the total basin area.

B. General Drainage Concept

- Developed drainage within the site will be conveyed along paved streets with roadside ditches and culverts, as well as grass-lined channels through drainage easements, following historic drainage patterns.
- Developed flows from the subdivision will be detained to historic levels through an on-site private stock pond, which will be upgraded to serve as a stormwater detention pond.
- Subdivision drainage improvements will be designed and constructed to meet El Paso County standards,

C. Drainage Impacts

- The proposed full-spectrum detention pond will detain to historic flows at the downstream property boundary, ensuring no significant adverse developed drainage impact on downstream properties.
- Drainage facilities within public road rights-of-way will be dedicated to the County for maintenance. The proposed stormwater detention pond will be privately owned and maintained by the subdivision HOA.

DRAINAGE STATEMENT

Engineer's Statement:

The attached drainage plan and report were prepared under my direction and supervision and are correct to the best of my knowledge and belief. Said drainage report has been prepared according to the criteria established by the County for drainage reports and said report is in conformity with the master plan of the drainage basin. I accept responsibility for liability caused by negligent acts, errors or omissions on my part in preparing this report.

COLORADO REGISTERED JOHN P. SCHWAB 29891 PROFESSIONAL ENGINEER

5/11/20

John P. Schwab, P.E. #29891

Developer's Statement:

I, the developer have read and will comply with all of the requirements specified in this drainage report and plan.

By: Eric L 5/14/20

Printed Name: Eric Leffler Date

BF Ranch Trust 2015

11730 Timberlane Court, Colorado Springs, CO 80908

El Paso County's Statement

Filed in accordance with the requirements of the El Paso County Land Development Code, Drainage Criteria Manual, Volumes 1 and 2, and Engineering Criteria Manual as amended.

Jennifer Irvine, P.E.
County Engineer / ECM Administrator

Conditions:

Approved
By: Elizabeth Nijkamp
Date:06/09/2020
El Paso County Planning & Community Development

I. GENERAL LOCATION AND DESCRIPTION

A. Background

Abert Ranch is a proposed rural residential subdivision located in northeastern El Paso County, Colorado. The Abert Ranch parcel (El Paso County Assessor's Number 61000-00-464) is located between Grandview Subdivision and Settlers Ranch Subdivision, west of Steppler Road, as shown in Figure A1 (Appendix E). Abert Ranch Subdivision will consist of 10 low-density residential lots (2.5-acre minimum size) on a 40.4-acre parcel.

B. Scope

This report is intended to fulfill the El Paso County requirements for a Preliminary and Final Drainage Report (FDR) for submittal with the Preliminary Plan and Final Plat applications. The report provides a summary of site drainage issues impacting the proposed development, including analysis of impacts from upstream drainage areas, site-specific developed drainage patterns, and impacts on downstream facilities. This report has been prepared based on the guidelines and criteria presented in the El Paso County Drainage Criteria Manual.

C. Site Location and Description

The Abert Ranch parcel is located in the Northeast Quarter of Section 24 and the Northwest Quarter of Section 23, Township 11 South, Range 66 West of the 6th Principal Meridian. The site is currently a vacant meadow tract. The property is currently zoned RR-5 (Rural Residential; 5-acre minimum lots), and the proposed subdivision will include re-zoning the property to RR-2.5 (Rural Residential; 2.5-acre minimum lots). The proposed low-density lots will be served by individual wells and septic systems.

The north boundary of the property borders the existing Grandview Subdivision, and the south boundary of the property adjoins the approved Settlers Ranch Subdivision, both of which consist primarily of 2.5-acre lots. The west boundary of the property borders an undeveloped 40-acre ranch property, which is currently in the process of Re-zoning and Preliminary Plat approval for the proposed Settlers View Subdivision, with 2.5-acre minimum lots.

Access to the Abert Ranch Subdivision will be provided by extension of Silver Nell Drive southeasterly through the adjoining Settlers View Subdivision, along with construction of the proposed Abert Ranch Drive extending north and east through the new subdivision. Abert Ranch Drive will connect to Settlers Ranch Road as Settlers Ranch Filing No. 2 develops to the south.

Subdivision infrastructure improvements will include paving of new public roadways through the site, as well as grading, drainage, and utility service improvements for the proposed residential lots.

Local roads will be classified as rural residential roads, with 60-feet rights-of-way and paved widths of 28-feet.

Ground elevations within the parcel range from a low point of approximately 7,540 feet above mean sea level at the east boundary of the parcel, to a high point of 7,650 feet near the southwest corner of the property.

This site is located in the East Cherry Creek drainage basin. Surface drainage from the property flows easterly towards tributaries of East Cherry Creek. The terrain is rolling with slopes ranging from 2% to 8%. Existing vegetation is typical eastern Colorado prairie grass.

D. General Soil Conditions

According to the Soil Survey of El Paso County prepared by the Soil Conservation Service, on-site soils are comprised primarily of the following soil types (see Appendix A):

- Type 67 – "Peyton sandy loam": well drained, moderate erosion hazard (Hydrologic Group B)

E. References

City of Colorado Springs & El Paso County "Drainage Criteria Manual, Volumes 1 and 2," revised May, 2014.

El Paso County "Engineering Criteria Manual," revised December 13, 2016.

FEMA, Flood Insurance Rate Map (FIRM) Number 08041C0305G, December 7, 2018.

JPS Engineering, Inc., "Final Drainage Report for Grandview Subdivision," September 7, 2007 (approved by El Paso County 9/14/07).

JPS Engineering, Inc., "Master Development Drainage Plan (MDDP) and Preliminary Drainage Report for Walden Preserve Subdivision," December 10, 2004 (approved by El Paso County 12/20/04).

JPS Engineering, Inc., "Final Drainage Report for Settlers Ranch Subdivision Filing No. 1," October 18, 2005 (approved by El Paso County 10/19/05).

JPS Engineering, Inc., "Final Drainage Report for Settlers Ranch Subdivision Filing No. 2," May 30, 2008 (approved by El Paso County 3/31/09).

JPS Engineering, Inc., "Final Drainage Report for Settlers View Subdivision," March 5, 2019 (approved by El Paso County 3/11/19).

JPS Engineering, Inc., "Final Drainage Report for Walden Pines Subdivision," March 24, 2004.

JPS Engineering, Inc., "Final Drainage Report for Walden Preserve Subdivision Filing No. 1," May 11, 2005.

II. DRAINAGE BASINS AND SUB-BASINS

A. Major Basin Description

The proposed development lies within the East Cherry Creek Drainage Basin (CYCY 0200), as classified by El Paso County. Drainage from the site flows easterly to a tributary of East Cherry Creek, which flows to a confluence with the main channel north of Walker Road. Downstream agricultural areas generally drain northerly towards the main channel of East Cherry Creek.

No drainage planning study has been completed for this drainage basin or any adjacent drainage basins. In the absence of plans for regional drainage facilities, El Paso County generally requires new developments to provide stormwater detention to maintain historic runoff flows leaving developed areas.

The major drainage basins lying in and around the proposed development are depicted in Figure EX1. The Abert Ranch parcel is located near the southerly limit of the East Cherry Creek Drainage Basin, which comprises a total drainage area in excess of 30 square miles. The proposed 40-acre Abert Ranch subdivision represents less than 0.2 percent of the total basin area, which is primarily ranch land.

B. Floodplain Impacts

The proposed development area is located beyond the limits of any 100-year floodplain delineated by the Federal Emergency Management Agency (FEMA). The floodplain limits in the vicinity of the site are shown in Flood Insurance Rate Map (FIRM) Number 08041C0305G, dated December 7, 2018, as shown in the enclosed FIRMette exhibit (Appendix E).

C. Sub-Basin Description

The existing drainage basins lying in and around the proposed development are depicted in Figure EX1 (Appendix E). The existing on-site topography has been delineated as several sub-basins draining to design points at the north and east and west boundaries of the site.

The developed drainage basins lying within the proposed development are depicted on Figure D1. The developed site layout has been divided into sub-basins based on the proposed road layout within the site. The natural drainage patterns will be impacted through development by site grading and concentration of runoff in subdivision roadside ditches and channels.

On-site flows will be diverted to the existing natural drainage swales and channels running through the property, following historic drainage paths.

III. DRAINAGE DESIGN CRITERIA

A. Development Criteria Reference

No Drainage Basin Planning Study (DBPS) has been completed for the East Cherry Creek Drainage Basin. Previous drainage reports for completed subdivision filings have proposed to provide on-site detention for mitigation of developed flows.

B. Hydrologic Criteria

In accordance with the El Paso County Drainage Criteria Manual, Rational Method procedures were utilized for hydrologic calculations since the tributary drainage basins are below 100 acres.

Rational Method hydrologic calculations were based on the following assumptions:

- Design storm (minor) — 5-year
- Design storm (major) — 100-year
- Time of Concentration – Overland Flow — "Airport" equation (300' max. developed)
- Time of Concentration – Gutter/Ditch Flow — "SCS Upland" equation
- Rainfall Intensities — El Paso County I-D-F Curve
- Hydrologic soil type — B

	C5	C100
• Runoff Coefficients - undeveloped:		
Existing pasture/range areas	0.08	0.35
• Runoff Coefficients - developed:		
Proposed lot areas (2.5-acre lots)	0.17	0.417
Proposed lot areas (5-acre lots)	0.137	0.393

Hydrologic calculations are enclosed in Appendix A, and peak design flows are identified on the drainage basin drawings.

IV. DRAINAGE PLANNING FOUR STEP PROCESS

El Paso County Drainage Criteria require drainage planning to include a Four Step Process for receiving water protection that focuses on reducing runoff volumes, treating the water quality capture volume (WQCV), stabilizing drainageways, and implementing long-term source controls.

As stated in DCM Volume 2, the Four Step Process is applicable to all new and re-development projects with construction activities that disturb 1 acre or greater or that disturb less than 1 acre but are part of a larger common plan of development. The Four Step Process has been implemented as follows in the planning of this project:

Step 1: Employ Runoff Reduction Practices

- Minimize Impacts: The proposed rural residential subdivision development with 2.5-acre minimum lot sizes provides for inherently minimal drainage impacts based on the limited impervious areas associated with rural residential development.
- Minimize Directly Connected Impervious Areas (MDCIA): The rural residential development will have roadside ditches along all roads, providing for impervious areas to drain across pervious areas. Based on the roadside ditches throughout the subdivision, the subdivision is classified as MDCIA Level One.
- Grass Swales: The proposed roadside ditches will drain to existing and proposed grass-lined drainage swales following historic drainage patterns through the property.

Step 2: Stabilize Drainageways

- Proper erosion control measures will be implemented along the roadside ditches and grass-lined drainage channels to provide stabilized drainageways within the site.

Step 3: Provide Water Quality Capture Volume (WQCV)

- FSD: An existing Stock Pond near the east boundary of the site will be upgraded to serve as a Full-Spectrum Detention Pond. On-site drainage will be routed through the extended detention basin, which will capture and slowly release the WQCV over a 40-hour design release period.

Step 4: Consider Need for Industrial and Commercial BMPs

- No industrial or commercial land uses are proposed within this rural residential subdivision.
- On-site drainage will be routed through the private Full-Spectrum Detention (FSD) basin to minimize introduction of contaminants to the County's public drainage system.

V. DRAINAGE FACILITY DESIGN

A. General Concept

Development of the Abert Ranch Subdivision will require site grading and paving, resulting in additional impervious areas across the site. The general drainage pattern will consist of grading away from home sites to swales and roadside ditches along the internal roads within the subdivision, conveying runoff flows through the site. Runoff from the site will flow by roadside ditches to cross culverts at low points in the road profiles, and grass-lined channels connecting to existing natural swales at the site boundaries.

The stormwater management concept for the Abert Ranch development will be to provide roadside ditches and natural swales as required to convey developed drainage through the site to existing natural outfalls. Individual lot grading will provide positive drainage away from building sites, and direct developed flows into the system of roadside ditches and drainage swales running through the subdivision.

An existing stock pond near the east boundary of the subdivision will be upgraded to serve as a stormwater detention pond to mitigate the impact of developed flows and maintain historic peak flows downstream of the property.

B. Specific Details

1. Existing Drainage Conditions

Historic drainage conditions within the site are depicted in Figure EX1. The on-site area has been identified as Basin I, which is impacted by upstream off-site drainage basins to the north, west, and south.

Basin OI1 is the off-site area to the north within the existing Grandview Subdivision. Basin A is the off-site area to the west within the proposed Settlers View Subdivision. Basins D11 and D12 are the off-site areas to the south within the proposed Settlers Ranch Subdivision.

Off-site flows from Basins OI1, A, D11, and D12 enter the Abert Ranch property and drain easterly in an existing grass-lined drainage channel, flowing through an existing stock pond, and ultimately crossing Steppler Road in an existing 48-inch RCP culvert at the eastern site boundary.

Flows from Basins OI1, A, D11, D12, and I combine at Design Pont #I, with historic peak flows calculated as Q_5 = 16.3 cfs and Q_{100} = 119.9 cfs.

2. Developed Drainage Conditions

The developed drainage basins and projected flows are shown in Figure D1, and hydrologic calculations are enclosed in Appendix A.

Basins A, B, and C represent developed basins within the adjoining Settlers View Subdivision, and these basins will continue to sheet flow easterly through the proposed Abert Ranch Subdivision.

Basin C will flow easterly along the south side of Silver Nell Drive, combining with Basin E at Design Point #E, with developed peak flows calculated as Q_5 = 2.5 cfs and Q_{100} = 10.2 cfs. An 18-inch RCP culvert will convey flows at Design Point #E northerly across Silver Nell Drive on the west side of Abert Ranch Drive.

Basins G, D11, and H will flow northeasterly to the low point in the roadway profile at Design Point #H, combining with upstream flows from DP-F, with total developed peak flows calculated as Q_5 = 14.6 cfs and Q_{100} = 64.4 cfs. A 30-inch RCP culvert will convey flows from Design Point #H northerly across Abert Ranch Drive.

Basins A, D12, OI1, and I combine with flows from DP-H at Design Point #I, with total developed peak flows calculated as Q_5 = 32.8 cfs and Q_{100} = 147.9 cfs.

The existing stock pond within Basin I near the eastern site boundary will be upgraded to serve as "Detention Pond I," mitigating the impact of developed flows from the subdivision. This pond will reduce flows to historic levels prior to discharging to the existing natural drainage swale downstream.

C. Comparison of Developed to Historic Discharges

Based on the hydrologic calculations in Appendix A, the proposed development will result in calculated flows exceeding historic flows from the parcel. The increase in developed flows will be mitigated through on-site stormwater detention facilities. The comparison of developed to historic discharges at key design points is summarized as follows:

Design Point	Historic Flow			Developed Flow			Comparison of Developed to Historic Flow (Q_5%/Q_{100}%)
	Area (ac)	Q_5 (cfs)	Q_{100} (cfs)	Area (ac)	Q_5 (cfs)	Q_{100} (cfs)	
I (Developed)	95.1	16.3	119.9	95.1	32.8	147.9	201% / 123% (increase)
I (Detained)				95.1	0.4	113.9	2.5% / 95% (decrease)

D. Detention Ponds

The Developed storm runoff downstream of the proposed subdivision will be maintained at historic levels by routing flows through the proposed detention pond at the east boundary of the property. The existing stock pond will be upgraded to serve as Full-Spectrum Detention (FSD) Pond #I to mitigate developed flow and water quality impacts from the proposed subdivision. The pond outlet structure has been designed with multiple orifice openings to detain the full spectrum of storm events.

A geotechnical analysis will be performed to confirm the structural stability of the existing pond embankment, and any applicable geotechnical recommendations will be implemented in conjunction with upgrade of the existing pond. According to DCM Section 6.6, a jurisdictional dam is defined as a dam which "exceeds 10 feet in height measured vertically from the elevation of the lowest point of the natural surface of the ground where that point occurs along the longitudinal centerline of the dam up to the flowline crest of the emergency spillway of the dam."

Detention Pond #I will remain classified as a non-jurisdictional dam based on the size and height being under the jurisdictional dam criteria. We have calculated the dam height as follows:

Spillway Crest EL =	7552.9
Natural Ground EL @ Dam CL =	7543.0
Dam Height =	9.9 feet < 10.0 feet

Detailed pond routing calculations have been performed utilizing the Denver Urban Drainage "UD-Detention" software package (see Appendix C). The pond outlet structure configuration has been designed to maintain the calculated pond discharge below the target outflow, while maintaining the maximum water surface elevation below the pond spillway. Detention pond design parameters are summarized as follows:

Pond	Min. 100-Year Volume (ac-ft)	Outlet Structure
Pond #I	3.3	42-inch HDPE w/ orifice plate

Based on differences in software and calculation procedures, the "predevelopment peak flow" calculated in UD-Detention is 134.7 cfs, which is slightly lower than the 147.9 cfs calculated for Design Point #I in the Rational Method hydrologic calculations in Appendix A. However, the detained peak outflow of 113.9 cfs is well below the historic flow using either calculation.

The pond spillway will safely convey emergency overflows from the pond northeasterly through a dedicated drainage easement to the existing downstream culvert crossing Steppler Road. The existing downstream culvert is a 48-inch RCP that was installed within the last ten years. The existing culvert has a capacity of approximately 165 cfs (see Appendix B), which is adequate to convey 100-year flows without overtopping Steppler Road.

A 15-foot wide gravel maintenance access road will be provided for the stormwater detention facilities. The proposed detention pond will be privately owned and maintained by the subdivision homeowners association (HOA).

Development of Abert Ranch Subdivision will include off-site grading of Settlers Ranch Road extending from Abert Ranch Drive easterly to Steppler Road. The initial extension of Settlers Ranch Road will be for emergency access only, and no asphalt pavement will be completed as part of the Abert Ranch Subdivision improvements. Future development of the adjoining Settlers Ranch Filing No. 2D will include pavement of Settlers Ranch Road along with permanent water quality and detention improvements to be constructed in accordance with the drainage report for Settlers Ranch Filing No. 2.

Regarding the segment of Settlers Ranch Road constructed with the Abert Ranch project, water quality and detention for the north side of Settlers Ranch Road, as well as the segment of the south side of the road draining to Culvert D11a, will be provided in Abert Ranch Detention Pond I.

The remaining segment of the south side of Settlers Ranch Road excluded from water quality measures is limited to an area of approximately 0.3 acres, which is less than 1-acre and less than 20% of the applicable development area in conformance with ECM Section I.7.1.C.1. The limited area on the south side of Settlers Ranch Road lies within Settlers Ranch Drainage Basin D13, and future development of Settlers Ranch Filing No. 2D will include construction of Detention Pond No. 5 to provide detention and permanent water quality for this basin. Developed flows from this limited road segment during the period of interim gravel paving by the Abert Ranch project will have a minimal developed flow impact.

E. On-Site Drainage Facility Design

Developed sub-basins and proposed drainage improvements are depicted in the enclosed Drainage Plan (Sheets D1-D1.1). In accordance with El Paso County standards, new roadways will be graded with a minimum longitudinal slope of 1.0 percent. The typical local road section will consist of a 28-foot paved width with 2-foot gravel shoulders and 4:1 slopes to 2.5-foot ditches.

On-site drainage facilities will consist of roadside ditches, grass-lined channels, and culverts. Hydraulic calculations for final design of on-site drainage facilities are enclosed in Appendix B, and design criteria are summarized as follows:

1. Culverts

The internal road system has been graded to drain roadside ditches to low points along the road profile, where cross-culverts will convey developed flows into grass-lined channels following historic drainage paths. Culvert pipes have been specified as reinforced concrete pipe (RCP) with a minimum diameter of 18-inches.

Culvert sizes have been identified based on a maximum headwater-to-depth ratio (HW/D) of 1.0 for the minor (5-year) design storm. Final culvert design calculations were performed utilizing the FHWA HY-8 software package to perform a detailed analysis of inlet and outlet control conditions, meeting El Paso County criteria for allowable overtopping. HY8 calculation results are summarized in the "Culvert Sizing Summary" Table in Appendix B2. Riprap outlet protection will be provided at all culverts.

2. Open Channels

Drainage easements will be dedicated along major drainage channels following historic drainage paths through the subdivision. These channels will generally be grass-lined channels designed to convey 100-year flows, with a trapezoidal cross-section, variable bottom width and depth, 4:1 maximum side slopes, 1-foot freeboard, and a minimum slope of 0.5 percent.

The proposed drainage channels have been sized utilizing Manning's equation for open channel flow, assuming a friction factor ("n") of 0.030 for dry-land grass channels. Maximum allowable velocities will be evaluated based on El Paso County drainage criteria, typically allowing for a maximum 100-year velocity of 5 feet per second. Erosion control mats have been specified for channel segments with maximum 100-year velocities up to 8 feet per second. The proposed channels will generally be seeded with native grasses for erosion control. Erosion control mats, ditch checks, and/or riprap channel lining will be provided where required based on erosive velocities. Ditch flows will be diverted to drainage channels at the nearest practical location to minimize excessive roadside ditch sizes. Detailed channel hydraulic calculations are enclosed in Appendix B1.
Primary drainage swales crossing proposed lots have been placed in drainage easements, with variable widths based on the required channel sections.

As shown on the enclosed Drainage Plans (Sh. D1.1 and Sh. C1, Appendix E), the existing eroded channel flowing easterly across Basin A will be filled to stabilize this eroded area. According to the hydraulic calculations in Appendix B1, a triangular grass-lined channel section will provide acceptable velocities to convey 100-year flows in a stable manner.

F. Anticipated Drainage Problems and Solutions

The proposed stormwater Detention Pond I has been designed to mitigate the impacts of developed drainage from this project. The overall drainage plan for the subdivision includes a system of roadside ditches, channels, and culverts to convey developed flows through the site. The primary drainage problems anticipated within this development will consist of maintenance of these drainage channels, culverts, and detention pond facilities. Care will need to be taken to implement proper erosion control measures in the proposed roadside ditches, channels, and swales. Ditches will be designed to meet allowable velocity criteria. Erosion control mats, ditch checks, and riprap channel lining will be installed where necessary to minimize erosion concerns. Proper construction and maintenance of the proposed detention facilities will minimize downstream drainage impacts. Public roadway improvements and ditches within the public right-of-way will be owned and maintained by El Paso County. The proposed stormwater detention pond and drainage channels located within open space tracts will be owned and maintained by the subdivision HOA.

VI. EROSION / SEDIMENT CONTROL

The Contractor will be required to implement Best Management Practices (BMP's) for erosion control through the course of construction. Sediment control measures will include installation of silt fence at the toe of disturbed slopes and hay bales protecting drainage ditches. Cut slopes will be stabilized during excavation as necessary and vegetation will be established for stabilization of disturbed areas as soon as possible. All ditches will be designed to meet El Paso County criteria for slope and velocity. The proposed detention pond will serve as a sediment basin during the construction phase of the project.

VII. COST ESTIMATE AND DRAINAGE FEES

A cost estimate for proposed drainage improvements is enclosed in Appendix D, with a total estimated cost of approximately $75,077 for subdivision drainage improvements. The developer will finance all construction costs for proposed roadway and drainage improvements, and public facilities will be owned and maintained by El Paso County upon final acceptance. Private drainage facilities will be owned and maintained by the subdivision HOA.

This parcel is located in the East Cherry Creek Drainage Basin. No drainage and bridge fees will be due at time of recordation of the final plat as the subject site is not located in a fee basin.

VIII. SUMMARY

Abert Ranch is a proposed residential subdivision consisting of 10 lots on a 40.4-acre parcel located between Grandview Subdivision and Settlers Ranch Subdivision on the west side of Steppler Road in northeastern El Paso County. Development of the proposed Abert Ranch Subdivision will generate an increase in developed runoff from the site, which will be mitigated through construction of on-site stormwater detention facilities. The proposed drainage patterns will remain consistent with historic conditions, and new drainage facilities constructed to El Paso County standards will safely convey runoff to suitable outfalls.

The proposed detention pond will ensure that overall developed flows from the Abert Ranch Subdivision remain consistent with historic levels. Construction and proper maintenance of the proposed drainage and erosion control facilities will ensure that this subdivision has no significant adverse drainage impact on downstream or surrounding areas.

APPENDIX A

HYDROLOGIC CALCULATIONS

United States Department of Agriculture

NRCS

Natural Resources Conservation Service

A product of the National Cooperative Soil Survey, a joint effort of the United States Department of Agriculture and other Federal agencies, State agencies including the Agricultural Experiment Stations, and local participants

Custom Soil Resource Report for El Paso County Area, Colorado

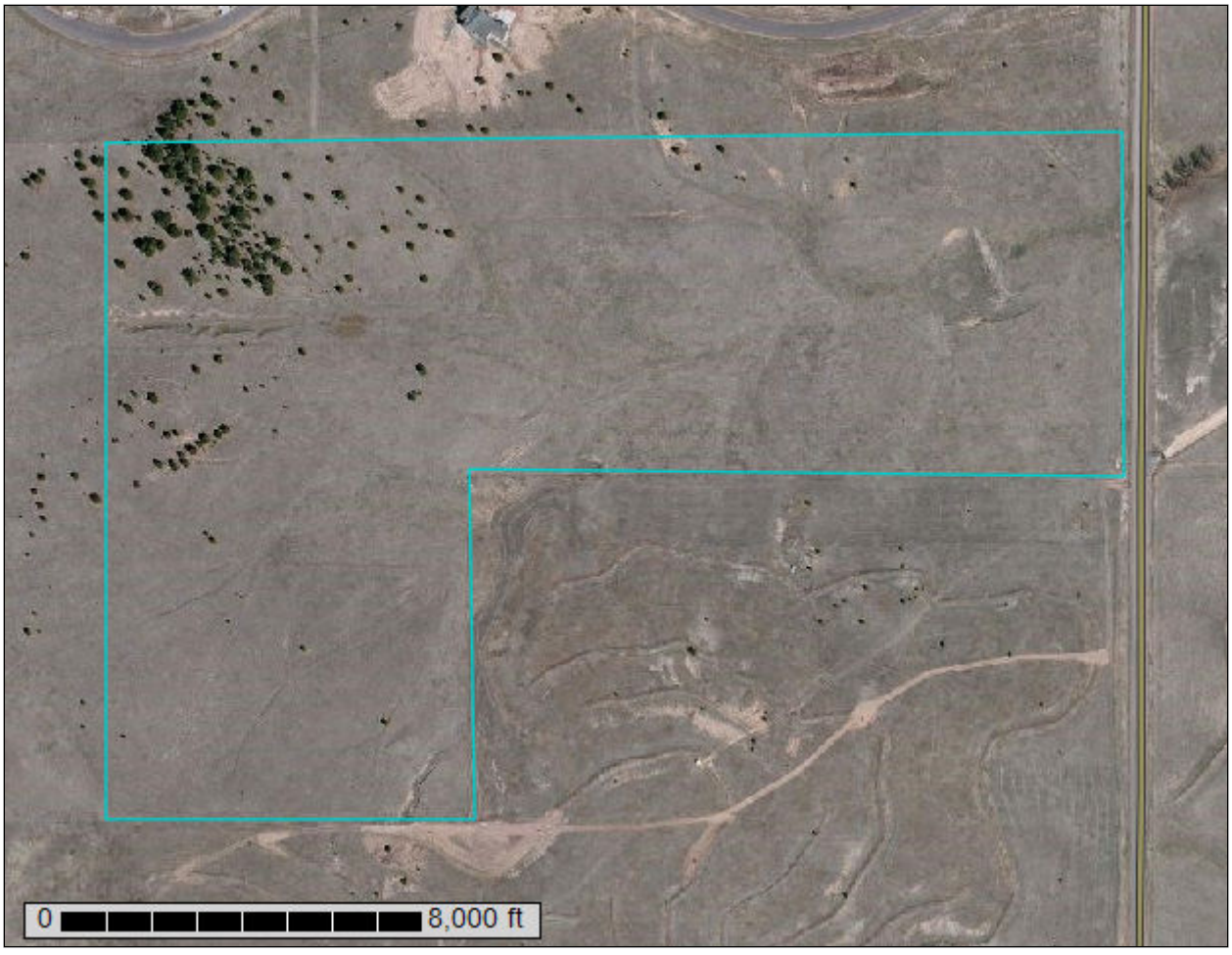

December 23, 2016

Preface

Soil surveys contain information that affects land use planning in survey areas. They highlight soil limitations that affect various land uses and provide information about the properties of the soils in the survey areas. Soil surveys are designed for many different users, including farmers, ranchers, foresters, agronomists, urban planners, community officials, engineers, developers, builders, and home buyers. Also, conservationists, teachers, students, and specialists in recreation, waste disposal, and pollution control can use the surveys to help them understand, protect, or enhance the environment.

Various land use regulations of Federal, State, and local governments may impose special restrictions on land use or land treatment. Soil surveys identify soil properties that are used in making various land use or land treatment decisions. The information is intended to help the land users identify and reduce the effects of soil limitations on various land uses. The landowner or user is responsible for identifying and complying with existing laws and regulations.

Although soil survey information can be used for general farm, local, and wider area planning, onsite investigation is needed to supplement this information in some cases. Examples include soil quality assessments (http://www.nrcs.usda.gov/wps/portal/nrcs/main/soils/health/) and certain conservation and engineering applications. For more detailed information, contact your local USDA Service Center (https://offices.sc.egov.usda.gov/locator/app?agency=nrcs) or your NRCS State Soil Scientist (http://www.nrcs.usda.gov/wps/portal/nrcs/detail/soils/contactus/?cid=nrcs142p2_053951).

Great differences in soil properties can occur within short distances. Some soils are seasonally wet or subject to flooding. Some are too unstable to be used as a foundation for buildings or roads. Clayey or wet soils are poorly suited to use as septic tank absorption fields. A high water table makes a soil poorly suited to basements or underground installations.

The National Cooperative Soil Survey is a joint effort of the United States Department of Agriculture and other Federal agencies, State agencies including the Agricultural Experiment Stations, and local agencies. The Natural Resources Conservation Service (NRCS) has leadership for the Federal part of the National Cooperative Soil Survey.

Information about soils is updated periodically. Updated information is available through the NRCS Web Soil Survey, the site for official soil survey information.

The U.S. Department of Agriculture (USDA) prohibits discrimination in all its programs and activities on the basis of race, color, national origin, age, disability, and where applicable, sex, marital status, familial status, parental status, religion, sexual orientation, genetic information, political beliefs, reprisal, or because all or a part of an individual's income is derived from any public assistance program. (Not all prohibited bases apply to all programs.) Persons with disabilities who require

alternative means for communication of program information (Braille, large print, audiotape, etc.) should contact USDA's TARGET Center at (202) 720-2600 (voice and TDD). To file a complaint of discrimination, write to USDA, Director, Office of Civil Rights, 1400 Independence Avenue, S.W., Washington, D.C. 20250-9410 or call (800) 795-3272 (voice) or (202) 720-6382 (TDD). USDA is an equal opportunity provider and employer.

Contents

Preface.....2
How Soil Surveys Are Made.....5
Soil Map.....8
Soil Map.....9
Legend.....10
Map Unit Legend.....11
Map Unit Descriptions.....11
El Paso County Area, Colorado.....13
67—Peyton sandy loam, 5 to 9 percent slopes.....13
References.....15

How Soil Surveys Are Made

Soil surveys are made to provide information about the soils and miscellaneous areas in a specific area. They include a description of the soils and miscellaneous areas and their location on the landscape and tables that show soil properties and limitations affecting various uses. Soil scientists observed the steepness, length, and shape of the slopes; the general pattern of drainage; the kinds of crops and native plants; and the kinds of bedrock. They observed and described many soil profiles. A soil profile is the sequence of natural layers, or horizons, in a soil. The profile extends from the surface down into the unconsolidated material in which the soil formed or from the surface down to bedrock. The unconsolidated material is devoid of roots and other living organisms and has not been changed by other biological activity.

Currently, soils are mapped according to the boundaries of major land resource areas (MLRAs). MLRAs are geographically associated land resource units that share common characteristics related to physiography, geology, climate, water resources, soils, biological resources, and land uses (USDA, 2006). Soil survey areas typically consist of parts of one or more MLRA.

The soils and miscellaneous areas in a survey area occur in an orderly pattern that is related to the geology, landforms, relief, climate, and natural vegetation of the area. Each kind of soil and miscellaneous area is associated with a particular kind of landform or with a segment of the landform. By observing the soils and miscellaneous areas in the survey area and relating their position to specific segments of the landform, a soil scientist develops a concept, or model, of how they were formed. Thus, during mapping, this model enables the soil scientist to predict with a considerable degree of accuracy the kind of soil or miscellaneous area at a specific location on the landscape.

Commonly, individual soils on the landscape merge into one another as their characteristics gradually change. To construct an accurate soil map, however, soil scientists must determine the boundaries between the soils. They can observe only a limited number of soil profiles. Nevertheless, these observations, supplemented by an understanding of the soil-vegetation-landscape relationship, are sufficient to verify predictions of the kinds of soil in an area and to determine the boundaries.

Soil scientists recorded the characteristics of the soil profiles that they studied. They noted soil color, texture, size and shape of soil aggregates, kind and amount of rock fragments, distribution of plant roots, reaction, and other features that enable them to identify soils. After describing the soils in the survey area and determining their properties, the soil scientists assigned the soils to taxonomic classes (units). Taxonomic classes are concepts. Each taxonomic class has a set of soil characteristics with precisely defined limits. The classes are used as a basis for comparison to classify soils systematically. Soil taxonomy, the system of taxonomic classification used in the United States, is based mainly on the kind and character of soil properties and the arrangement of horizons within the profile. After the soil

scientists classified and named the soils in the survey area, they compared the individual soils with similar soils in the same taxonomic class in other areas so that they could confirm data and assemble additional data based on experience and research.

The objective of soil mapping is not to delineate pure map unit components; the objective is to separate the landscape into landforms or landform segments that have similar use and management requirements. Each map unit is defined by a unique combination of soil components and/or miscellaneous areas in predictable proportions. Some components may be highly contrasting to the other components of the map unit. The presence of minor components in a map unit in no way diminishes the usefulness or accuracy of the data. The delineation of such landforms and landform segments on the map provides sufficient information for the development of resource plans. If intensive use of small areas is planned, onsite investigation is needed to define and locate the soils and miscellaneous areas.

Soil scientists make many field observations in the process of producing a soil map. The frequency of observation is dependent upon several factors, including scale of mapping, intensity of mapping, design of map units, complexity of the landscape, and experience of the soil scientist. Observations are made to test and refine the soil-landscape model and predictions and to verify the classification of the soils at specific locations. Once the soil-landscape model is refined, a significantly smaller number of measurements of individual soil properties are made and recorded. These measurements may include field measurements, such as those for color, depth to bedrock, and texture, and laboratory measurements, such as those for content of sand, silt, clay, salt, and other components. Properties of each soil typically vary from one point to another across the landscape.

Observations for map unit components are aggregated to develop ranges of characteristics for the components. The aggregated values are presented. Direct measurements do not exist for every property presented for every map unit component. Values for some properties are estimated from combinations of other properties.

While a soil survey is in progress, samples of some of the soils in the area generally are collected for laboratory analyses and for engineering tests. Soil scientists interpret the data from these analyses and tests as well as the field-observed characteristics and the soil properties to determine the expected behavior of the soils under different uses. Interpretations for all of the soils are field tested through observation of the soils in different uses and under different levels of management. Some interpretations are modified to fit local conditions, and some new interpretations are developed to meet local needs. Data are assembled from other sources, such as research information, production records, and field experience of specialists. For example, data on crop yields under defined levels of management are assembled from farm records and from field or plot experiments on the same kinds of soil.

Predictions about soil behavior are based not only on soil properties but also on such variables as climate and biological activity. Soil conditions are predictable over long periods of time, but they are not predictable from year to year. For example, soil scientists can predict with a fairly high degree of accuracy that a given soil will have a high water table within certain depths in most years, but they cannot predict that a high water table will always be at a specific level in the soil on a specific date.

After soil scientists located and identified the significant natural bodies of soil in the survey area, they drew the boundaries of these bodies on aerial photographs and

identified each as a specific map unit. Aerial photographs show trees, buildings, fields, roads, and rivers, all of which help in locating boundaries accurately.

Soil Map

The soil map section includes the soil map for the defined area of interest, a list of soil map units on the map and extent of each map unit, and cartographic symbols displayed on the map. Also presented are various metadata about data used to produce the map, and a description of each soil map unit.

Custom Soil Resource Report
Soil Map

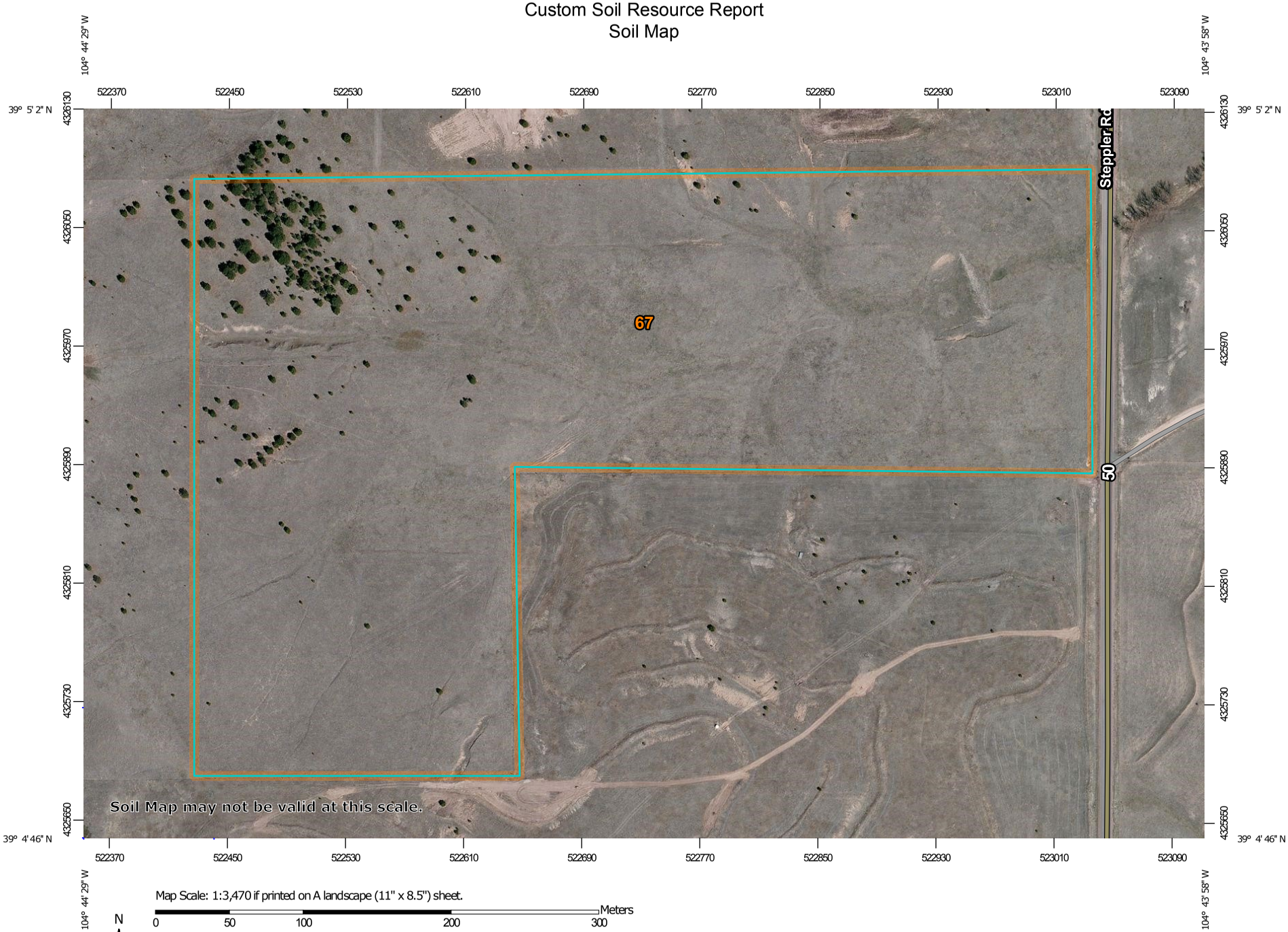

MAP LEGEND

Area of Interest (AOI)
- Area of Interest (AOI)

Soils
- Soil Map Unit Polygons
- Soil Map Unit Lines
- Soil Map Unit Points

Special Point Features
- Blowout
- Borrow Pit
- Clay Spot
- Closed Depression
- Gravel Pit
- Gravelly Spot
- Landfill
- Lava Flow
- Marsh or swamp
- Mine or Quarry
- Miscellaneous Water
- Perennial Water
- Rock Outcrop
- Saline Spot
- Sandy Spot
- Severely Eroded Spot
- Sinkhole
- Slide or Slip
- Sodic Spot
- Spoil Area
- Stony Spot
- Very Stony Spot
- Wet Spot
- Other
- Special Line Features

Water Features
- Streams and Canals

Transportation
- Rails
- Interstate Highways
- US Routes
- Major Roads
- Local Roads

Background
- Aerial Photography

MAP INFORMATION

The soil surveys that comprise your AOI were mapped at 1:24,000.

Warning: Soil Map may not be valid at this scale.

Enlargement of maps beyond the scale of mapping can cause misunderstanding of the detail of mapping and accuracy of soil line placement. The maps do not show the small areas of contrasting soils that could have been shown at a more detailed scale.

Please rely on the bar scale on each map sheet for map measurements.

Source of Map: Natural Resources Conservation Service
Web Soil Survey URL:
Coordinate System: Web Mercator (EPSG:3857)

Maps from the Web Soil Survey are based on the Web Mercator projection, which preserves direction and shape but distorts distance and area. A projection that preserves area, such as the Albers equal-area conic projection, should be used if more accurate calculations of distance or area are required.

This product is generated from the USDA-NRCS certified data as of the version date(s) listed below.

Soil Survey Area: El Paso County Area, Colorado
Survey Area Data: Version 14, Sep 23, 2016

Soil map units are labeled (as space allows) for map scales 1:50,000 or larger.

Date(s) aerial images were photographed: Apr 15, 2011—Sep 22, 2011

The orthophoto or other base map on which the soil lines were compiled and digitized probably differs from the background imagery displayed on these maps. As a result, some minor shifting of map unit boundaries may be evident.

Map Unit Legend

El Paso County Area, Colorado (CO625)			
Map Unit Symbol	**Map Unit Name**	**Acres in AOI**	**Percent of AOI**
67	Peyton sandy loam, 5 to 9 percent slopes	41.4	100.0%
Totals for Area of Interest		**41.4**	**100.0%**

Map Unit Descriptions

The map units delineated on the detailed soil maps in a soil survey represent the soils or miscellaneous areas in the survey area. The map unit descriptions, along with the maps, can be used to determine the composition and properties of a unit.

A map unit delineation on a soil map represents an area dominated by one or more major kinds of soil or miscellaneous areas. A map unit is identified and named according to the taxonomic classification of the dominant soils. Within a taxonomic class there are precisely defined limits for the properties of the soils. On the landscape, however, the soils are natural phenomena, and they have the characteristic variability of all natural phenomena. Thus, the range of some observed properties may extend beyond the limits defined for a taxonomic class. Areas of soils of a single taxonomic class rarely, if ever, can be mapped without including areas of other taxonomic classes. Consequently, every map unit is made up of the soils or miscellaneous areas for which it is named and some minor components that belong to taxonomic classes other than those of the major soils.

Most minor soils have properties similar to those of the dominant soil or soils in the map unit, and thus they do not affect use and management. These are called noncontrasting, or similar, components. They may or may not be mentioned in a particular map unit description. Other minor components, however, have properties and behavioral characteristics divergent enough to affect use or to require different management. These are called contrasting, or dissimilar, components. They generally are in small areas and could not be mapped separately because of the scale used. Some small areas of strongly contrasting soils or miscellaneous areas are identified by a special symbol on the maps. If included in the database for a given area, the contrasting minor components are identified in the map unit descriptions along with some characteristics of each. A few areas of minor components may not have been observed, and consequently they are not mentioned in the descriptions, especially where the pattern was so complex that it was impractical to make enough observations to identify all the soils and miscellaneous areas on the landscape.

The presence of minor components in a map unit in no way diminishes the usefulness or accuracy of the data. The objective of mapping is not to delineate pure taxonomic classes but rather to separate the landscape into landforms or landform segments that have similar use and management requirements. The delineation of such segments on the map provides sufficient information for the development of resource plans. If intensive use of small areas is planned, however,

onsite investigation is needed to define and locate the soils and miscellaneous areas.

An identifying symbol precedes the map unit name in the map unit descriptions. Each description includes general facts about the unit and gives important soil properties and qualities.

Soils that have profiles that are almost alike make up a *soil series*. Except for differences in texture of the surface layer, all the soils of a series have major horizons that are similar in composition, thickness, and arrangement.

Soils of one series can differ in texture of the surface layer, slope, stoniness, salinity, degree of erosion, and other characteristics that affect their use. On the basis of such differences, a soil series is divided into *soil phases*. Most of the areas shown on the detailed soil maps are phases of soil series. The name of a soil phase commonly indicates a feature that affects use or management. For example, Alpha silt loam, 0 to 2 percent slopes, is a phase of the Alpha series.

Some map units are made up of two or more major soils or miscellaneous areas. These map units are complexes, associations, or undifferentiated groups.

A *complex* consists of two or more soils or miscellaneous areas in such an intricate pattern or in such small areas that they cannot be shown separately on the maps. The pattern and proportion of the soils or miscellaneous areas are somewhat similar in all areas. Alpha-Beta complex, 0 to 6 percent slopes, is an example.

An *association* is made up of two or more geographically associated soils or miscellaneous areas that are shown as one unit on the maps. Because of present or anticipated uses of the map units in the survey area, it was not considered practical or necessary to map the soils or miscellaneous areas separately. The pattern and relative proportion of the soils or miscellaneous areas are somewhat similar. Alpha-Beta association, 0 to 2 percent slopes, is an example.

An *undifferentiated group* is made up of two or more soils or miscellaneous areas that could be mapped individually but are mapped as one unit because similar interpretations can be made for use and management. The pattern and proportion of the soils or miscellaneous areas in a mapped area are not uniform. An area can be made up of only one of the major soils or miscellaneous areas, or it can be made up of all of them. Alpha and Beta soils, 0 to 2 percent slopes, is an example.

Some surveys include *miscellaneous areas*. Such areas have little or no soil material and support little or no vegetation. Rock outcrop is an example.

El Paso County Area, Colorado

67—Peyton sandy loam, 5 to 9 percent slopes

Map Unit Setting

National map unit symbol: 369d
Elevation: 6,800 to 7,600 feet
Mean annual air temperature: 43 to 45 degrees F
Frost-free period: 115 to 125 days
Farmland classification: Not prime farmland

Map Unit Composition

Peyton and similar soils: 85 percent
Estimates are based on observations, descriptions, and transects of the mapunit.

Description of Peyton

Setting

Landform: Hills
Landform position (three-dimensional): Side slope
Down-slope shape: Linear
Across-slope shape: Linear
Parent material: Arkosic alluvium derived from sedimentary rock and/or arkosic residuum weathered from sedimentary rock

Typical profile

A - 0 to 12 inches: sandy loam
Bt - 12 to 25 inches: sandy clay loam
BC - 25 to 35 inches: sandy loam
C - 35 to 60 inches: sandy loam

Properties and qualities

Slope: 5 to 9 percent
Depth to restrictive feature: More than 80 inches
Natural drainage class: Well drained
Runoff class: Medium
Capacity of the most limiting layer to transmit water (Ksat): Moderately high (0.20 to 0.60 in/hr)
Depth to water table: More than 80 inches
Frequency of flooding: None
Frequency of ponding: None
Available water storage in profile: Moderate (about 7.3 inches)

Interpretive groups

Land capability classification (irrigated): None specified
Land capability classification (nonirrigated): 4e
Hydrologic Soil Group: B
Ecological site: Sandy Divide (R049BY216CO)
Hydric soil rating: No

Minor Components

Other soils

Percent of map unit:
Hydric soil rating: No

Pleasant

Percent of map unit:
Landform: Depressions
Hydric soil rating: Yes

References

American Association of State Highway and Transportation Officials (AASHTO). 2004. Standard specifications for transportation materials and methods of sampling and testing. 24th edition.

American Society for Testing and Materials (ASTM). 2005. Standard classification of soils for engineering purposes. ASTM Standard D2487-00.

Cowardin, L.M., V. Carter, F.C. Golet, and E.T. LaRoe. 1979. Classification of wetlands and deep-water habitats of the United States. U.S. Fish and Wildlife Service FWS/OBS-79/31.

Federal Register. July 13, 1994. Changes in hydric soils of the United States.

Federal Register. September 18, 2002. Hydric soils of the United States.

Hurt, G.W., and L.M. Vasilas, editors. Version 6.0, 2006. Field indicators of hydric soils in the United States.

National Research Council. 1995. Wetlands: Characteristics and boundaries.

Soil Survey Division Staff. 1993. Soil survey manual. Soil Conservation Service. U.S. Department of Agriculture Handbook 18. http://www.nrcs.usda.gov/wps/portal/nrcs/detail/national/soils/?cid=nrcs142p2_054262

Soil Survey Staff. 1999. Soil taxonomy: A basic system of soil classification for making and interpreting soil surveys. 2nd edition. Natural Resources Conservation Service, U.S. Department of Agriculture Handbook 436. http://www.nrcs.usda.gov/wps/portal/nrcs/detail/national/soils/?cid=nrcs142p2_053577

Soil Survey Staff. 2010. Keys to soil taxonomy. 11th edition. U.S. Department of Agriculture, Natural Resources Conservation Service. http://www.nrcs.usda.gov/wps/portal/nrcs/detail/national/soils/?cid=nrcs142p2_053580

Tiner, R.W., Jr. 1985. Wetlands of Delaware. U.S. Fish and Wildlife Service and Delaware Department of Natural Resources and Environmental Control, Wetlands Section.

United States Army Corps of Engineers, Environmental Laboratory. 1987. Corps of Engineers wetlands delineation manual. Waterways Experiment Station Technical Report Y-87-1.

United States Department of Agriculture, Natural Resources Conservation Service. National forestry manual. http://www.nrcs.usda.gov/wps/portal/nrcs/detail/soils/home/?cid=nrcs142p2_053374

United States Department of Agriculture, Natural Resources Conservation Service. National range and pasture handbook. http://www.nrcs.usda.gov/wps/portal/nrcs/detail/national/landuse/rangepasture/?cid=stelprdb1043084

United States Department of Agriculture, Natural Resources Conservation Service. National soil survey handbook, title 430-VI. http://www.nrcs.usda.gov/wps/portal/nrcs/detail/soils/scientists/?cid=nrcs142p2_054242

United States Department of Agriculture, Natural Resources Conservation Service. 2006. Land resource regions and major land resource areas of the United States, the Caribbean, and the Pacific Basin. U.S. Department of Agriculture Handbook 296. http://www.nrcs.usda.gov/wps/portal/nrcs/detail/national/soils/?cid=nrcs142p2_053624

United States Department of Agriculture, Soil Conservation Service. 1961. Land capability classification. U.S. Department of Agriculture Handbook 210. http://www.nrcs.usda.gov/Internet/FSE_DOCUMENTS/nrcs142p2_052290.pdf

Hydrologic Soil Group—El Paso County Area, Colorado
(Abert Ranch)

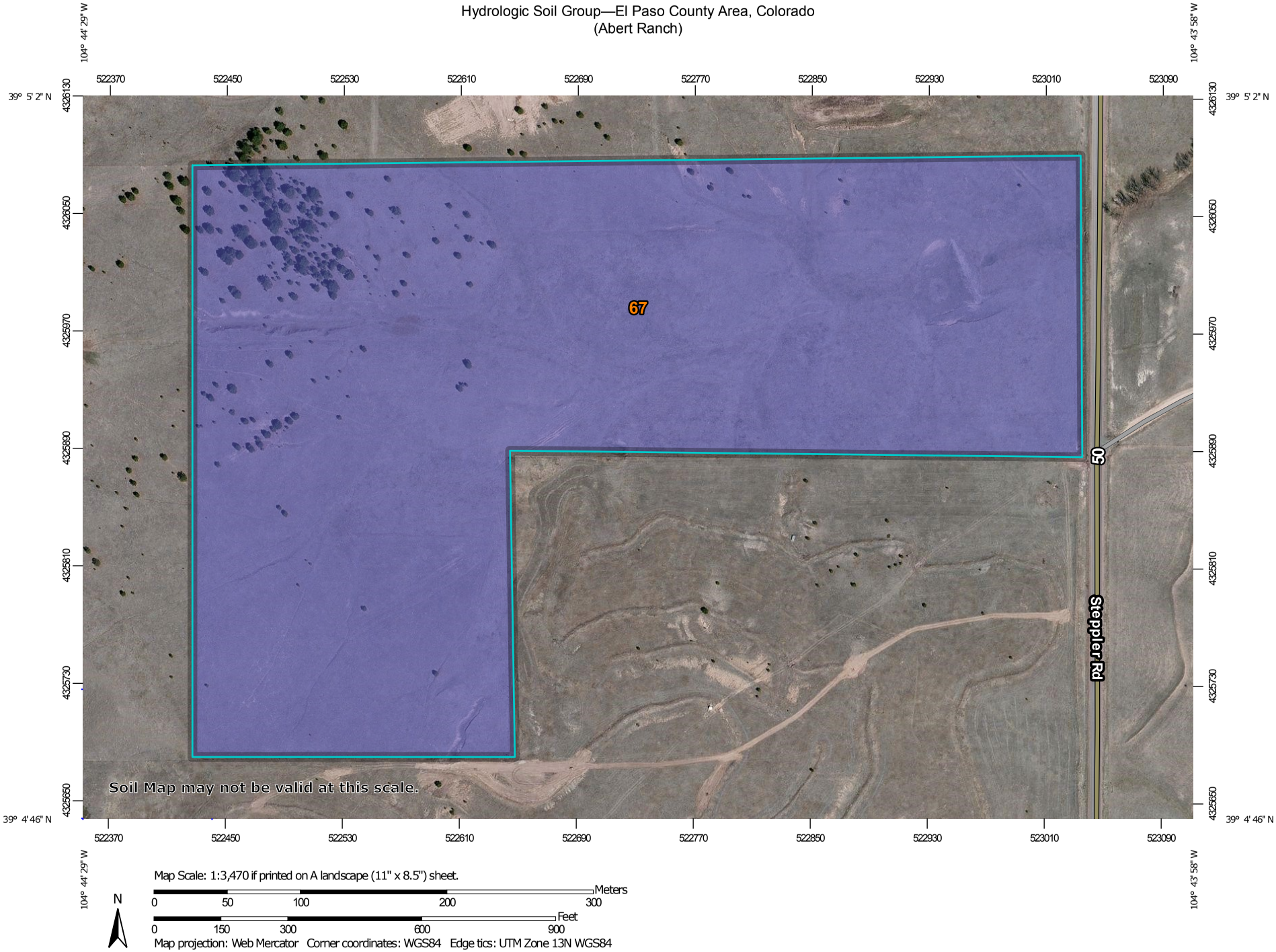

Map Scale: 1:3,470 if printed on A landscape (11" x 8.5") sheet.

N

Meters
0 50 100 200 300

Feet
0 150 300 600 900

Map projection: Web Mercator Corner coordinates: WGS84 Edge tics: UTM Zone 13N WGS84

MAP LEGEND

Area of Interest (AOI)

Area of Interest (AOI)

Soils

Soil Rating Polygons

A

A/D

B

B/D

C

C/D

D

Not rated or not available

Soil Rating Lines

A

A/D

B

B/D

C

C/D

D

Not rated or not available

Soil Rating Points

A

A/D

B

B/D

C

C/D

D

Not rated or not available

Water Features

Streams and Canals

Transportation

Rails

Interstate Highways

US Routes

Major Roads

Local Roads

Background

Aerial Photography

MAP INFORMATION

The soil surveys that comprise your AOI were mapped at 1:24,000.

Warning: Soil Map may not be valid at this scale.

Enlargement of maps beyond the scale of mapping can cause misunderstanding of the detail of mapping and accuracy of soil line placement. The maps do not show the small areas of contrasting soils that could have been shown at a more detailed scale.

Please rely on the bar scale on each map sheet for map measurements.

Source of Map: Natural Resources Conservation Service
Web Soil Survey URL:
Coordinate System: Web Mercator (EPSG:3857)

Maps from the Web Soil Survey are based on the Web Mercator projection, which preserves direction and shape but distorts distance and area. A projection that preserves area, such as the Albers equal-area conic projection, should be used if more accurate calculations of distance or area are required.

This product is generated from the USDA-NRCS certified data as of the version date(s) listed below.

Soil Survey Area: El Paso County Area, Colorado
Survey Area Data: Version 14, Sep 23, 2016

Soil map units are labeled (as space allows) for map scales 1:50,000 or larger.

Date(s) aerial images were photographed: Apr 15, 2011—Sep 22, 2011

The orthophoto or other base map on which the soil lines were compiled and digitized probably differs from the background imagery displayed on these maps. As a result, some minor shifting of map unit boundaries may be evident.

Hydrologic Soil Group

Hydrologic Soil Group— Summary by Map Unit — El Paso County Area, Colorado (CO625)				
Map unit symbol	Map unit name	Rating	Acres in AOI	Percent of AOI
67	Peyton sandy loam, 5 to 9 percent slopes	B	41.4	100.0%
Totals for Area of Interest			**41.4**	**100.0%**

Description

Hydrologic soil groups are based on estimates of runoff potential. Soils are assigned to one of four groups according to the rate of water infiltration when the soils are not protected by vegetation, are thoroughly wet, and receive precipitation from long-duration storms.

The soils in the United States are assigned to four groups (A, B, C, and D) and three dual classes (A/D, B/D, and C/D). The groups are defined as follows:

Group A. Soils having a high infiltration rate (low runoff potential) when thoroughly wet. These consist mainly of deep, well drained to excessively drained sands or gravelly sands. These soils have a high rate of water transmission.

Group B. Soils having a moderate infiltration rate when thoroughly wet. These consist chiefly of moderately deep or deep, moderately well drained or well drained soils that have moderately fine texture to moderately coarse texture. These soils have a moderate rate of water transmission.

Group C. Soils having a slow infiltration rate when thoroughly wet. These consist chiefly of soils having a layer that impedes the downward movement of water or soils of moderately fine texture or fine texture. These soils have a slow rate of water transmission.

Group D. Soils having a very slow infiltration rate (high runoff potential) when thoroughly wet. These consist chiefly of clays that have a high shrink-swell potential, soils that have a high water table, soils that have a claypan or clay layer at or near the surface, and soils that are shallow over nearly impervious material. These soils have a very slow rate of water transmission.

If a soil is assigned to a dual hydrologic group (A/D, B/D, or C/D), the first letter is for drained areas and the second is for undrained areas. Only the soils that in their natural condition are in group D are assigned to dual classes.

Rating Options

Aggregation Method: Dominant Condition

Component Percent Cutoff: None Specified

Tie-break Rule: Higher

Table 6-6. Runoff Coefficients for Rational Method
(Source: UDFCD 2001)

Land Use or Surface Characteristics	Percent Impervious	Runoff Coefficients											
		2-year		5-year		10-year		25-year		50-year		100-year	
		HSG A&B	HSG C&D	HSG A&B	HSG C&D	HSG A&B	HSG C&D	HSG A&B	HSG C&D	HSG A&B	HSG C&D	HSG A&B	HSG C&D
Business													
Commercial Areas	95	0.79	0.80	0.81	0.82	0.83	0.84	0.85	0.87	0.87	0.88	0.88	0.89
Neighborhood Areas	70	0.45	0.49	0.49	0.53	0.53	0.57	0.58	0.62	0.60	0.65	0.62	0.68
Residential													
1/8 Acre or less	65	0.41	0.45	0.45	0.49	0.49	0.54	0.54	0.59	0.57	0.62	0.59	0.65
1/4 Acre	40	0.23	0.28	0.30	0.35	0.36	0.42	0.42	0.50	0.46	0.54	0.50	0.58
1/3 Acre	30	0.18	0.22	0.25	0.30	0.32	0.38	0.39	0.47	0.43	0.52	0.47	0.57
1/2 Acre	25	0.15	0.20	0.22	0.28	0.30	0.36	0.37	0.46	0.41	0.51	0.46	0.56
1 Acre	20	0.12	0.17	0.20	0.26	0.27	0.34	0.35	0.44	0.40	0.50	0.44	0.55
Industrial													
Light Areas	80	0.57	0.60	0.59	0.63	0.63	0.66	0.66	0.70	0.68	0.72	0.70	0.74
Heavy Areas	90	0.71	0.73	0.73	0.75	0.75	0.77	0.78	0.80	0.80	0.82	0.81	0.83
Parks and Cemeteries	7	0.05	0.09	0.12	0.19	0.20	0.29	0.30	0.40	0.34	0.46	0.39	0.52
Playgrounds	13	0.07	0.13	0.16	0.23	0.24	0.31	0.32	0.42	0.37	0.48	0.41	0.54
Railroad Yard Areas	40	0.23	0.28	0.30	0.35	0.36	0.42	0.42	0.50	0.46	0.54	0.50	0.58
Undeveloped Areas													
Historic Flow Analysis--Greenbelts, Agriculture	2	0.03	0.05	0.09	0.16	0.17	0.26	0.26	0.38	0.31	0.45	0.36	0.51
Pasture/Meadow	0	0.02	0.04	0.08	0.15	0.15	0.25	0.25	0.37	0.30	0.44	0.35	0.50
Forest	0	0.02	0.04	0.08	0.15	0.15	0.25	0.25	0.37	0.30	0.44	0.35	0.50
Exposed Rock	100	0.89	0.89	0.90	0.90	0.92	0.92	0.94	0.94	0.95	0.95	0.96	0.96
Offsite Flow Analysis (when landuse is undefined)	45	0.26	0.31	0.32	0.37	0.38	0.44	0.44	0.51	0.48	0.55	0.51	0.59
Streets													
Paved	100	0.89	0.89	0.90	0.90	0.92	0.92	0.94	0.94	0.95	0.95	0.96	0.96
Gravel	80	0.57	0.60	0.59	0.63	0.63	0.66	0.66	0.70	0.68	0.72	0.70	0.74
Drive and Walks	100	0.89	0.89	0.90	0.90	0.92	0.92	0.94	0.94	0.95	0.95	0.96	0.96
Roofs	90	0.71	0.73	0.73	0.75	0.75	0.77	0.78	0.80	0.80	0.82	0.81	0.83
Lawns	0	0.02	0.04	0.08	0.15	0.15	0.25	0.25	0.37	0.30	0.44	0.35	0.50

3.2 Time of Concentration

One of the basic assumptions underlying the Rational Method is that runoff is a function of the average rainfall rate during the time required for water to flow from the hydraulically most remote part of the drainage area under consideration to the design point. However, in practice, the time of concentration can be an empirical value that results in reasonable and acceptable peak flow calculations.

For urban areas, the time of concentration (t_c) consists of an initial time or overland flow time (t_i) plus the travel time (t_t) in the storm sewer, paved gutter, roadside drainage ditch, or drainage channel. For non-urban areas, the time of concentration consists of an overland flow time (t_i) plus the time of travel in a concentrated form, such as a swale or drainageway. The travel portion (t_t) of the time of concentration can be estimated from the hydraulic properties of the storm sewer, gutter, swale, ditch, or drainageway. Initial time, on the other hand, will vary with surface slope, depression storage, surface cover, antecedent rainfall, and infiltration capacity of the soil, as well as distance of surface flow. The time of concentration is represented by Equation 6-7 for both urban and non-urban areas.

$$t_c = t_i + t_t \quad \text{(Eq. 6-7)}$$

Where:

t_c = time of concentration (min)

t_i = overland (initial) flow time (min)

t_t = travel time in the ditch, channel, gutter, storm sewer, etc. (min)

3.2.1 Overland (Initial) Flow Time

The overland flow time, t_i, may be calculated using Equation 6-8.

$$t_i = \frac{0.395(1.1 - C_5)\sqrt{L}}{S^{0.33}} \quad \text{(Eq. 6-8)}$$

Where:

t_i = overland (initial) flow time (min)
C_5 = runoff coefficient for 5-year frequency (see Table 6-6)
L = length of overland flow (300 ft maximum for non-urban land uses, 100 ft maximum for urban land uses)
S = average basin slope (ft/ft)

Note that in some urban watersheds, the overland flow time may be very small because flows quickly concentrate and channelize.

3.2.2 Travel Time

For catchments with overland and channelized flow, the time of concentration needs to be considered in combination with the travel time, t_t, which is calculated using the hydraulic properties of the swale, ditch, or channel. For preliminary work, the overland travel time, t_t, can be estimated with the help of Figure 6-25 or Equation 6-9 (Guo 1999).

$$V = C_v S_w^{0.5} \quad \text{(Eq. 6-9)}$$

Where:

V = velocity (ft/s)

C_v = conveyance coefficient (from Table 6-7)

S_w = watercourse slope (ft/ft)

Table 6-7. Conveyance Coefficient, C_v

Type of Land Surface	C_v
Heavy meadow	2.5
Tillage/field	5
Riprap (not buried)*	6.5
Short pasture and lawns	7
Nearly bare ground	10
Grassed waterway	15
Paved areas and shallow paved swales	20

* For buried riprap, select C_v value based on type of vegetative cover.

The travel time is calculated by dividing the flow distance (in feet) by the velocity calculated using Equation 6-9 and converting units to minutes.

The time of concentration (t_c) is then the sum of the overland flow time (t_i) and the travel time (t_t) per Equation 6-7.

3.2.3 First Design Point Time of Concentration in Urban Catchments

Using this procedure, the time of concentration at the first design point (typically the first inlet in the system) in an urbanized catchment should not exceed the time of concentration calculated using Equation 6-10. The first design point is defined as the point where runoff first enters the storm sewer system.

$$t_c = \frac{L}{180} + 10 \qquad \text{(Eq. 6-10)}$$

Where:

t_c = maximum time of concentration at the first design point in an urban watershed (min)

L = waterway length (ft)

Equation 6-10 was developed using the rainfall-runoff data collected in the Denver region and, in essence, represents regional "calibration" of the Rational Method. Normally, Equation 6-10 will result in a lesser time of concentration at the first design point and will govern in an urbanized watershed. For subsequent design points, the time of concentration is calculated by accumulating the travel times in downstream drainageway reaches.

3.2.4 Minimum Time of Concentration

If the calculations result in a t_c of less than 10 minutes for undeveloped conditions, it is recommended that a minimum value of 10 minutes be used. The minimum t_c for urbanized areas is 5 minutes.

3.2.5 Post-Development Time of Concentration

As Equation 6-8 indicates, the time of concentration is a function of the 5-year runoff coefficient for a drainage basin. Typically, higher levels of imperviousness (higher 5-year runoff coefficients) correspond to shorter times of concentration, and lower levels of imperviousness correspond to longer times of

Figure 6-5. Colorado Springs Rainfall Intensity Duration Frequency

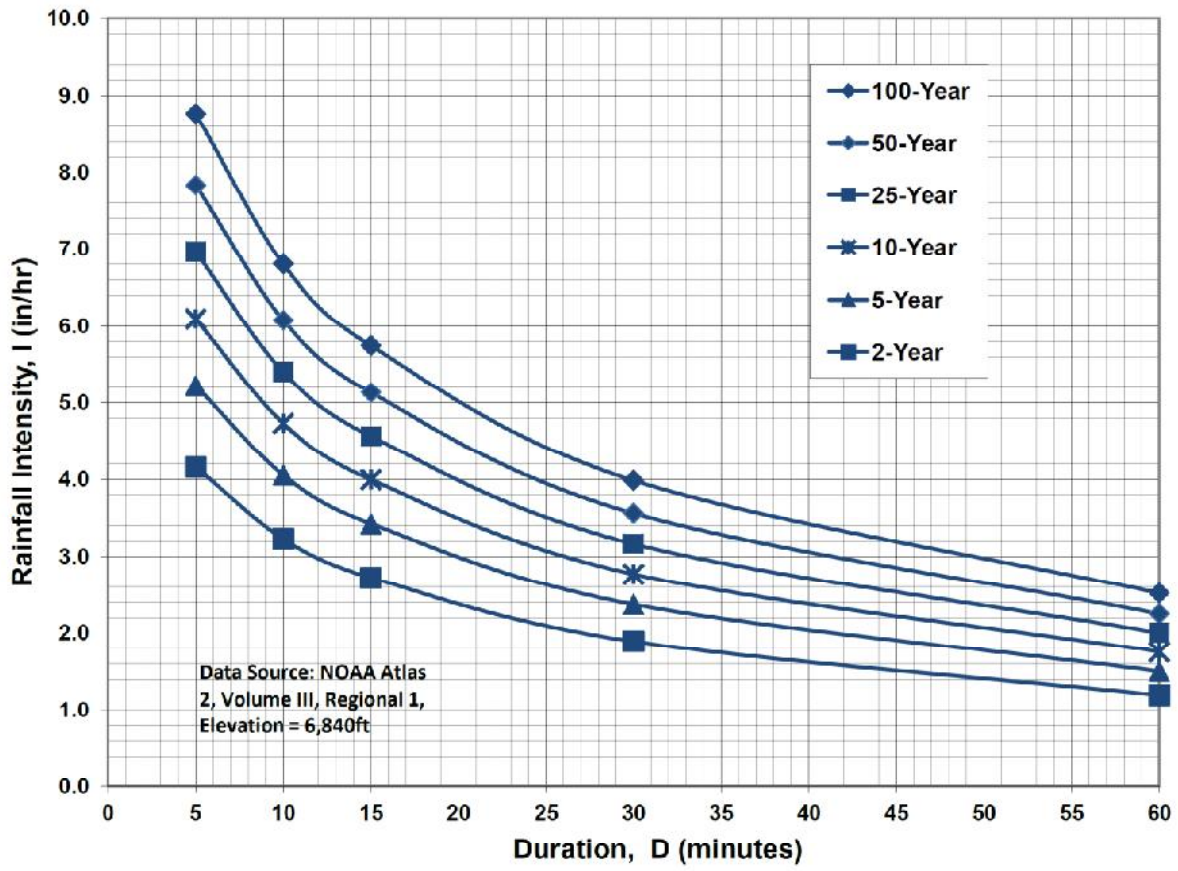

IDF Equations

$I_{100} = -2.52 \ln(D) + 12.735$

$I_{50} = -2.25 \ln(D) + 11.375$

$I_{25} = -2.00 \ln(D) + 10.111$

$I_{10} = -1.75 \ln(D) + 8.847$

$I_{5} = -1.50 \ln(D) + 7.583$

$I_{2} = -1.19 \ln(D) + 6.035$

Note: Values calculated by equations may not precisely duplicate values read from figure.

ABERT RANCH
RATIONAL METHOD

HISTORIC FLOWS

BASIN	DESIGN POINT	AREA (AC)	C		Overland Flow			Channel flow					TOTAL Tc [4] (MIN)	TOTAL Tc [4] (MIN)	INTENSITY [5]		PEAK FLOW	
			5-YEAR[7]	100-YEAR [7]	LENGTH (FT)	SLOPE (FT/FT)	Tco [1] (MIN)	CHANNEL LENGTH (FT)	CONVEYANCE COEFFICIENT C	SLOPE (FT/FT)	SCS [2] VELOCITY (FT/S)	Tt [3] (MIN)			5-YR (IN/HR)	100-YR (IN/HR)	Q5 [6] (CFS)	Q100 [6] (CFS)
A (SETTLERS VIEW)	A	14.95	0.080	0.350	300	0.033	23.4	400	15.00	0.075	4.11	1.6	25.1	25.1	2.75	4.62	3.29	24.16
D11 (SETT. RANCH)	D11	15.60	0.080	0.350	300	0.037	20.9	1100	15.00	0.072	4.02	4.6	25.5	25.5	2.73	4.58	3.40	24.99
D12 (SETT. RANCH)	D12	11.00	0.080	0.350	300	0.040	20.4	450	15.00	0.089	4.47	1.7	22.1	22.1	2.94	4.94	2.59	19.01
OI1 (GRANDVIEW)	OI1	13.12	0.080	0.350	300	0.020	25.7	1750	15.00	0.042	3.07	9.5	35.2	35.2	2.24	3.76	2.35	17.28
I		40.46	0.080	0.350	0		0.0	2100	15.00	0.035	2.81	12.4	12.4	12.4	3.80	6.38		
A,D11,D12,OI1, I	I	95.13	0.080	0.350									37.5	37.5	2.15	3.60	16.34	119.93

1) OVERLAND FLOW Tco = (0.395*(1.1-RUNOFF COEFFICIENT)*(OVERLAND FLOW LENGTH^(0.5)/(SLOPE^(0.333))
2) SCS VELOCITY = C * ((SLOPE(FT/FT)^0.5)
C = 2.5 FOR HEAVY MEADOW
C = 5 FOR TILLAGE/FIELD
C = 7 FOR SHORT PASTURE AND LAWNS
C = 10 FOR NEARLY BARE GROUND
C = 15 FOR GRASSED WATERWAY
C = 20 FOR PAVED AREAS AND SHALLOW PAVED SWALES

3) MANNING'S CHANNEL TRAVEL TIME = L/V (WHEN CHANNEL VELOCITY IS KNOWN)
4) Tc = Tco + Tt
*** IF TOTAL TIME OF CONCENTRATION IS LESS THAN 5 MINUTES, THEN 5 MINUTES IS USED
5) INTENSITY BASED ON I-D-F EQUATIONS IN CITY OF COLORADO SPRINGS DRAINAGE CRITERIA MANUAL
I_5 = -1.5 * ln(Tc) + 7.583
I_{100} = -2.52 * ln(Tc) + 12.735
6) Q = CiA

ABERT RANCH SUBDIVISION
COMPOSITE RUNOFF COEFFICIENTS - TYPICAL RURAL RESIDENTIAL LOTS

DEVELOPED CONDITIONS

5-YEAR C VALUES

BASIN	TOTAL AREA (AC)	AREA (%)	SUB-AREA 1 DEVELOPMENT/ COVER	C	AREA (%)	SUB-AREA 2 DEVELOPMENT/ COVER	C	AREA (%)	SUB-AREA 3 DEVELOPMENT/ COVER	C	WEIGHTED C VALUE
2.5-ACRE LOTS	2.50	11.00	BUILDING / PAVEMENT	0.90	89.00	LANDSCAPED	0.08				0.170
5-ACRE LOTS	2.50	7.00	BUILDING / PAVEMENT	0.90	93.00	LANDSCAPED	0.08				0.137

100-YEAR C VALUES

BASIN	TOTAL AREA (AC)	AREA (%)	SUB-AREA 1 DEVELOPMENT/ COVER	C	AREA (AC)	SUB-AREA 2 DEVELOPMENT/ COVER	C	AREA (%)	SUB-AREA 3 DEVELOPMENT/ COVER	C	WEIGHTED C VALUE
2.5-ACRE LOTS	2.50	11.00	BUILDING / PAVEMENT	0.96	89.00	LANDSCAPED	0.35				0.417
5-ACRE LOTS	2.50	7.00	BUILDING / PAVEMENT	0.96	93.00	LANDSCAPED	0.35				0.393

IMPERVIOUS AREAS

BASIN	TOTAL AREA (AC)	AREA (%)	SUB-AREA 1 DEVELOPMENT/ COVER	PERCENT IMPERVIOUS	AREA (%)	SUB-AREA 2 DEVELOPMENT/ COVER	PERCENT IMPERVIOUS	AREA (%)	SUB-AREA 3 DEVELOPMENT/ COVER	PERCENT IMPERVIOUS	WEIGHTED % IMP
2.5-ACRE LOTS	2.50	11.00	BUILDING / PAVEMENT	100	89.00	LANDSCAPED	0				11.000
5-ACRE LOTS	2.50	7.00	BUILDING / PAVEMENT	100	93.00	LANDSCAPED	0				7.000

ABERT RANCH SUBDIVISION
COMPOSITE RUNOFF COEFFICIENTS

DEVELOPED CONDITIONS

5-YEAR C VALUES

BASIN	TOTAL AREA (AC)	(AC)	SUB-AREA 1 DEVELOPMENT/ COVER	C	AREA (AC)	SUB-AREA 2 DEVELOPMENT/ COVER	C	(AC)	SUB-AREA 3 DEVELOPMENT/ COVER	C	WEIGHTED C VALUE
C	1.28	1.28	2.5-AC LOTS	0.17							0.170
E	3.12	3.12	2.5-AC LOTS	0.17							0.170
C,E	4.40										0.170
B	2.93	2.93	2.5-AC LOTS	0.17							0.170
F	3.78	3.78	2.5-AC LOTS	0.17							0.170
C,E,B,F	11.11										0.170
G	2.27	2.27	2.5-AC LOTS	0.17							0.170
D11	15.60	15.60	5-AC LOTS	0.137							0.137
H	5.69	5.69	2.5-AC LOTS	0.17							0.170
DPF,G,D11,H	34.67										0.155
A	10.74	10.74	2.5-AC LOTS	0.17							0.170
D12	11.00	11.00	5-AC LOTS	0.137							0.137
OI1	13.12	13.12	5-AC LOTS	0.137							0.137
I	25.60	16.60	5-AC LOTS	0.137	9.00	2.5-AC LOTS	0.17				0.149
DPH,D12,OI1,I	95.13										0.150

100-YEAR C VALUES

BASIN	TOTAL AREA (AC)	(AC)	SUB-AREA 1 DEVELOPMENT/ COVER	C	AREA (AC)	SUB-AREA 2 DEVELOPMENT/ COVER	C	(AC)	SUB-AREA 3 DEVELOPMENT/ COVER	C	WEIGHTED C VALUE
C	1.28	1.28	2.5-AC LOTS	0.417							0.417
E	3.12	3.12	2.5-AC LOTS	0.417							0.417
C,E	4.40										0.417
B	2.93	2.93	2.5-AC LOTS	0.417							0.417
F	3.78	3.78	2.5-AC LOTS	0.417							0.417
C,E,B,F	11.11										0.417
G	2.27	2.27	2.5-AC LOTS	0.417							0.417
D11	15.60	15.60	5-AC LOTS	0.393							0.393
H	5.69	5.69	2.5-AC LOTS	0.417							0.417
DPF,G,D11,H	34.67										0.406
A	10.74	10.74	2.5-AC LOTS	0.417							0.417
D12	11.00	11.00	5-AC LOTS	0.393							0.393
OI1	13.12	13.12	5-AC LOTS	0.393							0.393
I	25.60	16.60	5-AC LOTS	0.393	9.00	2.5-AC LOTS	0.417				0.401
DPH,D12,OI1,I	95.13										0.403

ABERT RANCH SUBDIVISION
RATIONAL METHOD

DEVELOPED FLOWS

					Overland Flow			Channel flow										
BASIN	DESIGN POINT	AREA (AC)	C 5-YEAR[7]	C 100-YEAR[7]	LENGTH (FT)	SLOPE (FT/FT)	Tco[1] (MIN)	CHANNEL LENGTH (FT)	CONVEYANCE COEFFICIENT C	SLOPE (FT/FT)	SCS[2] VELOCITY (FT/S)	Tt[3] (MIN)	TOTAL Tc[4] (MIN)	TOTAL Tc[4] (MIN)	INTENSITY[5] 5-YR (IN/HR)	INTENSITY[5] 100-YR (IN/HR)	PEAK FLOW Q5[6] (CFS)	PEAK FLOW Q100[6] (CFS)
EAST CHERRY CREEK BASIN																		
C	C	1.28	0.170	0.417	300	0.067	15.7	0				0.0	15.7	15.7	3.45	5.80	0.75	3.10
E		3.12	0.170	0.417	300	0.060	16.2	250	15.00	0.056	3.55	1.2	17.4	17.4	3.30	5.54	1.75	7.20
C,E	E	4.40	0.170	0.417									17.4	17.4	3.30	5.54	2.47	10.16
B	B	2.93	0.170	0.417	300	0.050	17.3	0				0.0	17.3	17.3	3.31	5.56	1.65	6.79
F		3.78	0.170	0.417			0.0	400	15.00	0.048	3.27	2.0	2.0	5.0				
C,E,B,F	F	11.11	0.170	0.417									19.3	19.3	3.14	5.28	5.94	24.45
G		2.27	0.170	0.417	0		0.0	300	15.00	0.067	3.87	1.3	1.3	5.0	5.17	8.68	1.99	8.22
D11 (SETT. RANCH)	D11	15.60	0.137	0.393	300	0.037	19.8	1100	15.00	0.072	4.02	4.6	24.3	24.3	2.80	4.69	5.98	28.78
H		5.69	0.170	0.417	0		0.0	300	15.00	0.077	4.15	1.2	1.2	5.0				
DPF+G,D11,H	H	34.67	0.155	0.406									25.5	25.5	2.72	4.57	14.64	64.36
A	A	10.74	0.170	0.417	300	0.033	19.8	400	15.00	0.075	4.11	1.6	21.4	21.4	2.99	5.01	5.45	22.44
D12 (SETT. RANCH)	D12	11.00	0.137	0.393	300	0.040	19.2	450	15.00	0.089	4.47	1.7	20.9	20.9	3.02	5.07	4.55	21.93
OI1 (GRANDVIEW)	OI1	13.12	0.137	0.393	300	0.020	24.2	1750	15.00	0.042	3.07	9.5	33.7	33.7	2.31	3.87	4.14	19.95
I		25.60	0.149	0.401	0		0.0	2100	15.00	0.035	2.81	12.4	12.4	12.4				
DPH+A,D12,OI1,I	I	95.13	0.150	0.403									33.9	33.9	2.30	3.86	32.81	147.90

1) OVERLAND FLOW Tco = (0.395*(1.1-RUNOFF COEFFICIENT)*(OVERLAND FLOW LENGTH^(0.5)/(SLOPE^(0.333))
2) SCS VELOCITY = C * ((SLOPE(FT/FT)^0.5)
C = 2.5 FOR HEAVY MEADOW
C = 5 FOR TILLAGE/FIELD
C = 7 FOR SHORT PASTURE AND LAWNS
C = 10 FOR NEARLY BARE GROUND
C = 15 FOR GRASSED WATERWAY
C = 20 FOR PAVED AREAS AND SHALLOW PAVED SWALES

3) MANNING'S CHANNEL TRAVEL TIME = L/V (WHEN CHANNEL VELOCITY IS KNOWN)
4) Tc = Tco + Tt
*** IF TOTAL TIME OF CONCENTRATION IS LESS THAN 5 MINUTES, THEN 5 MINUTES IS USED
5) INTENSITY BASED ON I-D-F EQUATIONS IN CITY OF COLORADO SPRINGS DRAINAGE CRITERIA MANUAL
$I_5 = -1.5 * \ln(Tc) + 7.583$
$I_{100} = -2.52 * \ln(Tc) + 12.735$
6) Q = CiA

7) WEIGHTED AVERAGE C VALUES FOR COMBINED BASINS

APPENDIX B1

HYDRAULIC CALCULATIONS - CHANNELS

ABERT RANCH
DITCH CALCULATION SUMMARY

PROPOSED ROADSIDE DITCHES

ROADWAY	FROM STA	TO STA	SIDE	PROPOSED SLOPE (%)	SIDE SLOPE (Z)	CHANNEL DEPTH (FT)	FRICTION FACTOR (n)	ROW WIDTH (ft)	BASIN	Q100 FLOW (CFS)	DITCH FLOW % OF BASIN	DITCH FLOW (CFS)	Q100 DEPTH (FT)	Q100 VELOCITY (FT/S)	DITCH LINING
SILVER NELL DRIVE	1030	1425	N	5.97	4:1/3:1	2.5	0.030	60	F	24.5	10	2.5	0.4	4.1	GRASS
SILVER NELL DRIVE	1030	1425	S	5.97	4:1/3:1	2.5	0.030	60	E	10.2	70	7.1	0.6	5.4	**GRASS / ECB**
ABERT RANCH DRIVE	1070	1200	E	7.15	4:1/3:1	2.5	0.030	60	G	8.2	10	0.8	0.3	3.3	GRASS
ABERT RANCH DRIVE	1070	1200	W	7.15	4:1/3:1	2.5	0.030	60	E	10.2	30	3.1	0.4	4.7	**GRASS / ECB**
ABERT RANCH DRIVE	1200	1602	E	4.00	4:1/3:1	2.5	0.030	60	H	67.1	5	3.4	0.5	3.8	GRASS
ABERT RANCH DRIVE	1200	1602	W	4.00	4:1/3:1	2.5	0.030	60	F	24.5	40	9.8	0.8	5.0	**GRASS / ECB**
ABERT RANCH DRIVE	1602	1694	E	1.00	4:1/3:1	2.5	0.030	60	H	67.1	5	3.4	0.7	2.3	GRASS
ABERT RANCH DRIVE	1602	1694	W	1.00	4:1/3:1	2.5	0.030	60	F	24.5	25	6.1	0.8	2.6	GRASS
ABERT RANCH DRIVE	1740	2630	N	5.00	4:1/3:1	2.5	0.030	60	I	153.0	25	38.3	1.2	7.7	**GRASS / ECB**
ABERT RANCH DRIVE	1740	2630	S	5.00	4:1/3:1	2.5	0.030	60	H	67.1	10	6.7	0.6	5.0	**GRASS / ECB**
ABERT RANCH DRIVE	2630	2750	N	3.00	4:1/3:1	2.5	0.030	60	I	153.0	5	7.7	0.7	4.2	GRASS
ABERT RANCH DRIVE	2630	2750	S	3.00	4:1/3:1	2.5	0.030	60	H	67.1	5	3.4	0.5	3.4	GRASS

1) Channel flow calculations based on Manning's Equation
2) Channel depth includes 1' minimum freeboard
3) n = 0.03 for grass-lined non-irrigated channels (minimum)
4) n = 0.045 for riprap-lined channels
5) Vmax = 5.0 fps per El Paso County criteria (p. 10-13) for fescue (dry land grass) for 100-year flows
6) Vmax = 8.0 fps with Erosion Control Blankets (Tensar Eronet SC150 or equal)

ABERT RANCH
CHANNEL CALCULATIONS
DEVELOPED FLOWS

EXISTING / PROPOSED CHANNELS

CHANNEL	DESIGN POINT	EXISTING SLOPE (%)	PROPOSED SLOPE (%)	BOTTOM WIDTH (B, FT)	SIDE SLOPE (Z)	CHANNEL DEPTH (FT)	FRICTION FACTOR (n)	Q100 FLOW (CFS)	Q100 DEPTH (FT)	Q100 VELOCITY (FT/S)	CHANNEL LINING
A	A		0.053	0	20:1	1.0	0.030	22.4	0.50	4.51	GRASS
H	F	0.069	0.069	20	4:1	2.0	0.030	24.5	0.24	4.87	GRASS
I	H	0.032	0.032	40	4:1	2.0	0.030	64.4	0.36	4.35	GRASS
I1 (Pond Outlet)	I	0.020	0.020	6	4:1	2.0	0.030	125.1	1.43	6.38	**GRASS / ECB**

1) Channel flow calculations based on Manning's Equation
2) Channel depth includes 1' minimum freeboard
3) n = 0.03 for grass-lined non-irrigated channels (minimum)
4) n = 0.035 for riprap-lined channels
5) Vmax = 5.0 fps for 100-year flows w/ grass-lined channels
6) Vmax = 8.0 fps for 100-year flows w/ Erosion Control Blankets (NAG C150 or equal)

TABLE 10-4

MAXIMUM PERMISSIBLE VELOCITIES FOR EARTH CHANNELS WITH VARIED GRASS LININGS AND SLOPES

Channel Slope	Lining	Permissible Mean Channel Velocity * (ft/sec)
0 - 5%	Sodded grass	7
	Bermudagrass	6
	Reed canarygrass	5
	Tall fescue	5
	Kentucky bluegrass	5
	Grass-legume mixture	4
	Red fescue	2.5
	Redtop	2.5
	Sericea lespedeza	2.5
	Annual lespedeza	2.5
	Small grains (temporary)	2.5
5 - 10%	Sodded grass	6
	Bermudagrass	5
	Reed canarygrass	4
	Tall fescue	4
	Kentucky bluegrass	4
	Grass-legume mixture	3
Greater than 10%	Sodded grass	5
	Bermudagrass	4
	Reed canarygrass	3
	Tall fescue	3
	Kentucky bluegrass	3

* For highly erodible soils, decrease permissible velocities by 25%.

* Grass lined channels are dependent upon assurances of continuous growth and maintenance of grass.

The complete line of RollMax™ products offers a variety of options for both short-term and permanent erosion control needs. Reference the RollMax Products Chart below to find the right solution for your next project.

RollMax Product Selection Chart

	TEMPORARY						
	ERONET						BIONET
				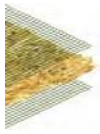			
	DS75	**DS150**	**S75**	**S150**	**SC150**	**C125**	**S75BN**
Longevity	45 days	60 days	12 mo.	12 mo.	24 mo.	36 mo.	12 mo.
Applications	Low Flow Channels 4:1-3:1 Slopes	Moderate Flow Channels 3:1-2:1 Slopes	Low Flow Channels 4:1-3:1 Slopes	Moderate Flow Channels 3:1-2:1 Slopes	Medium Flow Channels 2:1-1:1 Slopes	High-Flow Channels 1:1 and Greater Slopes	Low Flow Channels 4:1-3:1 Slopes
Design Permissible Shear Stress lbs/ft² (Pa)	Unvegetated 1.55 (74)	Unvegetated 1.75 (84)	Unvegetated 1.55 (74)	Unvegetated 1.75 (84)	Unvegetated 2.00 (96)	Unvegetated 2.25 (108)	Unvegetated 1.60 (76)
Design Permissible Velocity ft/s (m/s)	Unvegetated 5.00 (1.52)	Unvegetated 6.00 (1.52)	Unvegetated 5.00 (1.2)	Unvegetated 6.00 (1.83)	Unvegetated 8.00 (2.44)	Unvegetated 10.00 (3.05)	Unvegetated 5.00 (1.52)
Top Net	Lightweight accelerated photodegradable polypropylene 1.50 lbs/1000 ft² (0.73 kg/100 m²) approx wt	Lightweight accelerated photodegradable polypropylene 1.50 lbs/1000 ft² (0.73 kg/100 m²) approx wt	Lightweight photodegradable polypropylene 1.50 lbs/1000 ft² (0.73 kg/100 m²) approx wt	Lightweight photodegradable polypropylene 1.50 lbs/1000 ft² (0.73 kg/100 m²) approx wt	Heavyweight UV-stabilized polypropylene 2.9 lbs/1000 ft² (1.47 kg/100 m²) approx wt	Heavyweight UV-stabilized polypropylene 2.9 lbs/1000 ft² (1.47 kg/100 m²) approx wt	Leno woven. 100% biodegradable jute fiber 9.30 lbs/1000 ft² (4.53 kg/100 m²) approx wt
Center Net	N/A	N/A	N/A	N/A	N/A	N/A	N/A
Fiber Matrix	Straw fiber 0.50 lbs/yd² (0.27 kg/m²)	Straw fiber 0.50 lbs/yd² (0.27 kg/m²)	Straw fiber 0.50 lbs/yd² (0.27 kg/m²)	Straw fiber 0.50 lbs/yd² (0.27 kg/m²)	Straw/coconut matrix 70% Straw 0.35 lbs/yd² (0.19 kg/m²) 30% Coconut 0.15 lbs/yd² (0.08 kg/m²)	Coconut fiber 0.50 lbs/yd² (0.27 kg/m²)	Straw fiber 0.50 lbs/yd² (0.27 kg/m²)
Bottom Net	N/A	Lightweight accelerated photodegradable polypropylene 1.50 lbs/1000 ft² (0.73 kg/100 m²) approx wt	N/A	Lightweight photodegradable polypropylene 1.50 lbs/1000 ft² (0.73 kg/100 m²) approx wt	Lightweight photodegradable polypropylene 1.50 lbs/1000 ft² (0.73 kg/100 m²) approx wt	Heavyweight UV-stabilized polypropylene 2.9 lbs/1000 ft² (1.47 kg/100 m²) approx wt	N/A
Thread	Accelerated degradable	Accelerated degradable	Degradable	Degradable	Degradable	UV-stabilized polypropylene	Biodegradable

Hydraulic Analysis Report

Project Data

Project Title: Project - Abert Ranch

Designer: JPS

Project Date: Sunday, March 26, 2017

Project Units: U.S. Customary Units

Notes:

Channel Analysis: Silver-Nell-Dr-1030-1425-N

Notes:

Input Parameters

Channel Type: Triangular

Side Slope 1 (Z1): 4.0000 ft/ft

Side Slope 2 (Z2): 3.0000 ft/ft

Longitudinal Slope: 0.0597 ft/ft

Manning's n: 0.0300

Flow: 2.5000 cfs

Result Parameters

Depth: 0.4156 ft

Area of Flow: 0.6046 ft^2

Wetted Perimeter: 3.0281 ft

Hydraulic Radius: 0.1997 ft

Average Velocity: 4.1347 ft/s

Top Width: 2.9095 ft

Froude Number: 1.5983

Critical Depth: 0.5035 ft

Critical Velocity: 2.8179 ft/s

Critical Slope: 0.0215 ft/ft

Critical Top Width: 3.60 ft

Calculated Max Shear Stress: 1.5484 lb/ft^2

Calculated Avg Shear Stress: 0.7439 lb/ft^2

Channel Analysis: Silver-Nell-Dr-1030-1425-S

Notes:

Input Parameters

Channel Type: Triangular

Side Slope 1 (Z1): 4.0000 ft/ft

Side Slope 2 (Z2): 3.0000 ft/ft

Longitudinal Slope: 0.0597 ft/ft

Manning's n: 0.0300

Flow: 7.1000 cfs

Result Parameters

Depth: 0.6148 ft

Area of Flow: 1.3228 ft^2

Wetted Perimeter: 4.4788 ft

Hydraulic Radius: 0.2953 ft

Average Velocity: 5.3675 ft/s

Top Width: 4.3034 ft

Froude Number: 1.7061

Critical Depth: 0.7644 ft

Critical Velocity: 3.4721 ft/s

Critical Slope: 0.0187 ft/ft

Critical Top Width: 5.46 ft

Calculated Max Shear Stress: 2.2902 lb/ft^2

Calculated Avg Shear Stress: 1.1002 lb/ft^2

Channel Analysis: Abert-Ranch-Dr-1070-1200-E

Notes:

Input Parameters

Channel Type: Triangular

Side Slope 1 (Z1): 4.0000 ft/ft

Side Slope 2 (Z2): 3.0000 ft/ft

Longitudinal Slope: 0.0715 ft/ft

Manning's n: 0.0300

Flow: 0.8000 cfs

Result Parameters

Depth: 0.2621 ft

Area of Flow: 0.2404 ft^2

Wetted Perimeter: 1.9095 ft

Hydraulic Radius: 0.1259 ft

Average Velocity: 3.3274 ft/s

Top Width: 1.8347 ft

Froude Number: 1.6198

Critical Depth: 0.3192 ft

Critical Velocity: 2.2436 ft/s

Critical Slope: 0.0250 ft/ft

Critical Top Width: 2.28 ft

Calculated Max Shear Stress: 1.1694 lb/ft^2

Calculated Avg Shear Stress: 0.5618 lb/ft^2

Channel Analysis: ARD-1070-1200-W

Notes:

Input Parameters

Channel Type: Triangular

Side Slope 1 (Z1): 4.0000 ft/ft

Side Slope 2 (Z2): 3.0000 ft/ft

Longitudinal Slope: 0.0715 ft/ft

Manning's n: 0.0300

Flow: 3.1000 cfs

Result Parameters

Depth: 0.4356 ft

Area of Flow: 0.6640 ft^2

Wetted Perimeter: 3.1733 ft

Hydraulic Radius: 0.2093 ft

Average Velocity: 4.6684 ft/s

Top Width: 3.0490 ft

Froude Number: 1.7629

Critical Depth: 0.5487 ft

Critical Velocity: 2.9418 ft/s

Critical Slope: 0.0209 ft/ft

Critical Top Width: 3.92 ft

Calculated Max Shear Stress: 1.9434 lb/ft^2

Calculated Avg Shear Stress: 0.9336 lb/ft^2

Channel Analysis: ARD-1200-1602-E

Notes:

Input Parameters

Channel Type: Triangular

Side Slope 1 (Z1): 4.0000 ft/ft

Side Slope 2 (Z2): 3.0000 ft/ft

Longitudinal Slope: 0.0400 ft/ft

Manning's n: 0.0300

Flow: 3.4000 cfs

Result Parameters

Depth: 0.5028 ft

Area of Flow: 0.8849 ft^2

Wetted Perimeter: 3.6632 ft

Hydraulic Radius: 0.2416 ft

Average Velocity: 3.8424 ft/s

Top Width: 3.5197 ft

Froude Number: 1.3505

Critical Depth: 0.5694 ft

Critical Velocity: 2.9966 ft/s

Critical Slope: 0.0206 ft/ft

Critical Top Width: 4.07 ft

Calculated Max Shear Stress: 1.2550 lb/ft^2

Calculated Avg Shear Stress: 0.6029 lb/ft^2

Channel Analysis: ARD-1200-1602-W

Notes:

Input Parameters

Channel Type: Triangular

Side Slope 1 (Z1): 4.0000 ft/ft

Side Slope 2 (Z2): 3.0000 ft/ft

Longitudinal Slope: 0.0400 ft/ft

Manning's n: 0.0300

Flow: 9.8000 cfs

Result Parameters

Depth: 0.7478 ft

Area of Flow: 1.9574 ft^2

Wetted Perimeter: 5.4483 ft

Hydraulic Radius: 0.3593 ft

Average Velocity: 5.0066 ft/s

Top Width: 5.2349 ft

Froude Number: 1.4429

Critical Depth: 0.8695 ft

Critical Velocity: 3.7032 ft/s

Critical Slope: 0.0179 ft/ft

Critical Top Width: 6.21 ft

Calculated Max Shear Stress: 1.8666 lb/ft^2

Calculated Avg Shear Stress: 0.8967 lb/ft^2

Channel Analysis: ARD-1602-1694-E

Notes:

Input Parameters

Channel Type: Triangular

Side Slope 1 (Z1): 4.0000 ft/ft

Side Slope 2 (Z2): 3.0000 ft/ft

Longitudinal Slope: 0.0100 ft/ft

Manning's n: 0.0300

Flow: 3.4000 cfs

Result Parameters

Depth: 0.6521 ft

Area of Flow: 1.4881 ft^2

Wetted Perimeter: 4.7505 ft

Hydraulic Radius: 0.3133 ft

Average Velocity: 2.2847 ft/s

Top Width: 4.5644 ft

Froude Number: 0.7051

Critical Depth: 0.5694 ft

Critical Velocity: 2.9966 ft/s

Critical Slope: 0.0206 ft/ft

Critical Top Width: 4.07 ft

Calculated Max Shear Stress: 0.4069 lb/ft^2

Calculated Avg Shear Stress: 0.1955 lb/ft^2

Channel Analysis: ARD-1602-1694-W

Notes:

Input Parameters

Channel Type: Triangular

Side Slope 1 (Z1): 4.0000 ft/ft

Side Slope 2 (Z2): 3.0000 ft/ft

Longitudinal Slope: 0.0100 ft/ft

Manning's n: 0.0300

Flow: 6.1000 cfs

Result Parameters

Depth: 0.8119 ft

Area of Flow: 2.3069 ft^2

Wetted Perimeter: 5.9147 ft

Hydraulic Radius: 0.3900 ft

Average Velocity: 2.6442 ft/s

Top Width: 5.6830 ft

Froude Number: 0.7314

Critical Depth: 0.7193 ft

Critical Velocity: 3.3682 ft/s

Critical Slope: 0.0191 ft/ft

Critical Top Width: 5.14 ft

Calculated Max Shear Stress: 0.5066 lb/ft^2

Calculated Avg Shear Stress: 0.2434 lb/ft^2

Channel Analysis: ARD-1740-2630-N

Notes:

Input Parameters

Channel Type: Triangular

Side Slope 1 (Z1): 4.0000 ft/ft

Side Slope 2 (Z2): 3.0000 ft/ft

Longitudinal Slope: 0.0500 ft/ft

Manning's n: 0.0300

Flow: 38.3000 cfs

Result Parameters

Depth: 1.1957 ft

Area of Flow: 5.0040 ft^2

Wetted Perimeter: 8.7112 ft

Hydraulic Radius: 0.5744 ft

Average Velocity: 7.6538 ft/s

Top Width: 8.3700 ft

Froude Number: 1.7444

Critical Depth: 1.5000 ft

Critical Velocity: 4.8638 ft/s

Critical Slope: 0.0149 ft/ft

Critical Top Width: 10.72 ft

Calculated Max Shear Stress: 3.7306 lb/ft^2

Calculated Avg Shear Stress: 1.7922 lb/ft^2

Channel Analysis: ARD-1740-2630-S

Notes:

Input Parameters

Channel Type: Triangular

Side Slope 1 (Z1): 4.0000 ft/ft

Side Slope 2 (Z2): 3.0000 ft/ft

Longitudinal Slope: 0.0500 ft/ft

Manning's n: 0.0300

Flow: 6.7000 cfs

Result Parameters

Depth: 0.6219 ft

Area of Flow: 1.3536 ft^2

Wetted Perimeter: 4.5306 ft

Hydraulic Radius: 0.2988 ft

Average Velocity: 4.9499 ft/s

Top Width: 4.3531 ft

Froude Number: 1.5643

Critical Depth: 0.7468 ft

Critical Velocity: 3.4320 ft/s

Critical Slope: 0.0188 ft/ft

Critical Top Width: 5.34 ft

Calculated Max Shear Stress: 1.9403 lb/ft^2

Calculated Avg Shear Stress: 0.9321 lb/ft^2

Channel Analysis: ARD-2630-2750-N

Notes:

Input Parameters

Channel Type: Triangular

Side Slope 1 (Z1): 4.0000 ft/ft

Side Slope 2 (Z2): 3.0000 ft/ft

Longitudinal Slope: 0.0300 ft/ft

Manning's n: 0.0300

Flow: 7.7000 cfs

Result Parameters

Depth: 0.7210 ft

Area of Flow: 1.8196 ft^2

Wetted Perimeter: 5.2530 ft

Hydraulic Radius: 0.3464 ft

Average Velocity: 4.2316 ft/s

Top Width: 5.0473 ft

Froude Number: 1.2420

Critical Depth: 0.7896 ft

Critical Velocity: 3.5288 ft/s

Critical Slope: 0.0185 ft/ft

Critical Top Width: 5.64 ft

Calculated Max Shear Stress: 1.3498 lb/ft^2

Calculated Avg Shear Stress: 0.6485 lb/ft^2

Channel Analysis: ARD-2630-2750-S

Notes:

Input Parameters

Channel Type: Triangular

Side Slope 1 (Z1): 4.0000 ft/ft

Side Slope 2 (Z2): 3.0000 ft/ft

Longitudinal Slope: 0.0300 ft/ft

Manning's n: 0.0300

Flow: 3.4000 cfs

Result Parameters

Depth: 0.5307 ft

Area of Flow: 0.9857 ft^2

Wetted Perimeter: 3.8662 ft

Hydraulic Radius: 0.2549 ft

Average Velocity: 3.4495 ft/s

Top Width: 3.7147 ft

Froude Number: 1.1801

Critical Depth: 0.5694 ft

Critical Velocity: 2.9966 ft/s

Critical Slope: 0.0206 ft/ft

Critical Top Width: 4.07 ft

Calculated Max Shear Stress: 0.9934 lb/ft^2

Calculated Avg Shear Stress: 0.4773 lb/ft^2

Hydraulic Analysis Report

Project Data

Project Title: Project - Abert Ranch

Designer: JPS

Project Date: Sunday, March 26, 2017

Project Units: U.S. Customary Units

Notes:

Channel Analysis: Channel Analysis-A

Notes:

Input Parameters

Channel Type: Triangular

Side Slope 1 (Z1): 20.0000 ft/ft

Side Slope 2 (Z2): 20.0000 ft/ft

Longitudinal Slope: 0.0530 ft/ft

Manning's n: 0.0300

Flow: 22.4000 cfs = Q100

Result Parameters

Depth: 0.4983 ft

Area of Flow: 4.9654 ft^2

Wetted Perimeter: 19.9555 ft

Hydraulic Radius: 0.2488 ft

Average Velocity: 4.5112 ft/s

Top Width: 19.9307 ft

Froude Number: 1.5928

Critical Depth: 0.6002 ft

Critical Velocity: 3.1087 ft/s

Critical Slope: 0.0196 ft/ft

Critical Top Width: 24.01 ft

Calculated Max Shear Stress: 1.6479 lb/ft^2

Calculated Avg Shear Stress: 0.8229 lb/ft^2

Channel Analysis: Channel Analysis-H

Notes:

Input Parameters

Channel Type: Trapezoidal

Side Slope 1 (Z1): 4.0000 ft/ft

Side Slope 2 (Z2): 4.0000 ft/ft

Channel Width: 20.0000 ft

Longitudinal Slope: 0.0690 ft/ft

Manning's n: 0.0300

Flow: 24.5000 cfs

Result Parameters

Depth: 0.2400 ft

Area of Flow: 5.0307 ft^2

Wetted Perimeter: 21.9792 ft

Hydraulic Radius: 0.2289 ft

Average Velocity: 4.8701 ft/s

Top Width: 21.9201 ft

Froude Number: 1.7915

Critical Depth: 0.3511 ft

Critical Velocity: 3.2600 ft/s

Critical Slope: 0.0191 ft/ft

Critical Top Width: 22.81 ft

Calculated Max Shear Stress: 1.0334 lb/ft^2

Calculated Avg Shear Stress: 0.9855 lb/ft^2

Channel Analysis: Channel Analysis-I

Notes:

Input Parameters

Channel Type: Trapezoidal

Side Slope 1 (Z1): 4.0000 ft/ft

Side Slope 2 (Z2): 4.0000 ft/ft

Channel Width: 40.0000 ft

Longitudinal Slope: 0.0320 ft/ft

Manning's n: 0.0300

Flow: 64.4000 cfs

Result Parameters

Depth: 0.3570 ft

Area of Flow: 14.7890 ft^2

Wetted Perimeter: 42.9437 ft

Hydraulic Radius: 0.3444 ft

Average Velocity: 4.3546 ft/s

Top Width: 42.8559 ft

Froude Number: 1.3063

Critical Depth: 0.4257 ft

Critical Velocity: 3.6272 ft/s

Critical Slope: 0.0177 ft/ft

Critical Top Width: 43.41 ft

Calculated Max Shear Stress: 0.7128 lb/ft^2

Calculated Avg Shear Stress: 0.6877 lb/ft^2

Channel Analysis: Channel Analysis-I1-Pond-I-Outlet

Notes:

Input Parameters

Channel Type: Trapezoidal

Side Slope 1 (Z1): 4.0000 ft/ft

Side Slope 2 (Z2): 4.0000 ft/ft

Channel Width: 8.0000 ft

Longitudinal Slope: 0.0168 ft/ft

Manning's n: 0.0300

Flow: 121.6000 cfs

Result Parameters

Depth: 1.4089 ft

Area of Flow: 19.2103 ft^2

Wetted Perimeter: 19.6177 ft

Hydraulic Radius: 0.9792 ft

Average Velocity: 6.3299 ft/s

Top Width: 19.2708 ft

Froude Number: 1.1173

Critical Depth: 1.4969 ft

Critical Velocity: 5.8074 ft/s

Critical Slope: 0.0132 ft/ft

Critical Top Width: 19.98 ft

Calculated Max Shear Stress: 1.4769 lb/ft^2

Calculated Avg Shear Stress: 1.0265 lb/ft^2

APPENDIX B2

HYDRAULIC CALCULATIONS - CULVERTS

ABERT RANCH
CULVERT DESIGN SUMMARY

BASIN	DESIGN POINT	RD CL ELEV	INV IN ELEV	INV OUT ELEV	PIPE LENGTH (FT)	# of CULVERTS	PIPE DIA (FT)	TOTAL Q5 (CFS)	PER PIPE Q5 (CFS)	MAX ALLOWABLE HEADWATER[1]	CALC HW ELEV	TOTAL Q100 (CFS)	PER PIPE Q100 (CFS)	MAX ALLOWABLE HEADWATER[2]	CALC HW ELEV	**CALC HW/D[3]**
E	E	7617.32	7614.07	7613.59	48.0	1	**1.5**	2.5	2.5	7615.57	7614.9	10.20	10.20	7617.5	7616.2	**1.39**
F	F	7609.28	7605.20	7603.54	56.0	1	**2.5**	5.9	5.9	7607.70	7606.3	24.50	24.50	7609.5	7607.7	**0.99**
H	H	7576.34	7571.13	7569.45	70.0	1	**3.5**	14.6	14.6	7574.63	7572.7	64.40	64.40	7576.5	7574.9	**1.09**

[1] Q_5 MAX. ALLOWABLE HEADWATER/DEPTH (HW/D) = 1.0

HY-8 Culvert Analysis Report

Crossing Discharge Data – Culvert E

Discharge Selection Method: Specify Minimum, Design, and Maximum Flow

Minimum Flow: 1 cfs

Design Flow: 2.5 cfs

Maximum Flow: 10.2 cfs

Table 1 - Summary of Culvert Flows at Crossing: Crossing E

Headwater Elevation (ft)	Total Discharge (cfs)	Culvert E Discharge (cfs)	Roadway Discharge (cfs)	Iterations
7614.57	1.00	1.00	0.00	1
7614.78	1.92	1.92	0.00	1
7614.90	2.50	2.50	0.00	1
7615.12	3.76	3.76	0.00	1
7615.26	4.68	4.68	0.00	1
7615.39	5.60	5.60	0.00	1
7615.53	6.52	6.52	0.00	1
7615.66	7.44	7.44	0.00	1
7615.81	8.36	8.36	0.00	1
7615.97	9.28	9.28	0.00	1
7616.15	10.20	10.20	0.00	1
7617.32	14.78	14.78	0.00	Overtopping

Rating Curve Plot for Crossing: Crossing E

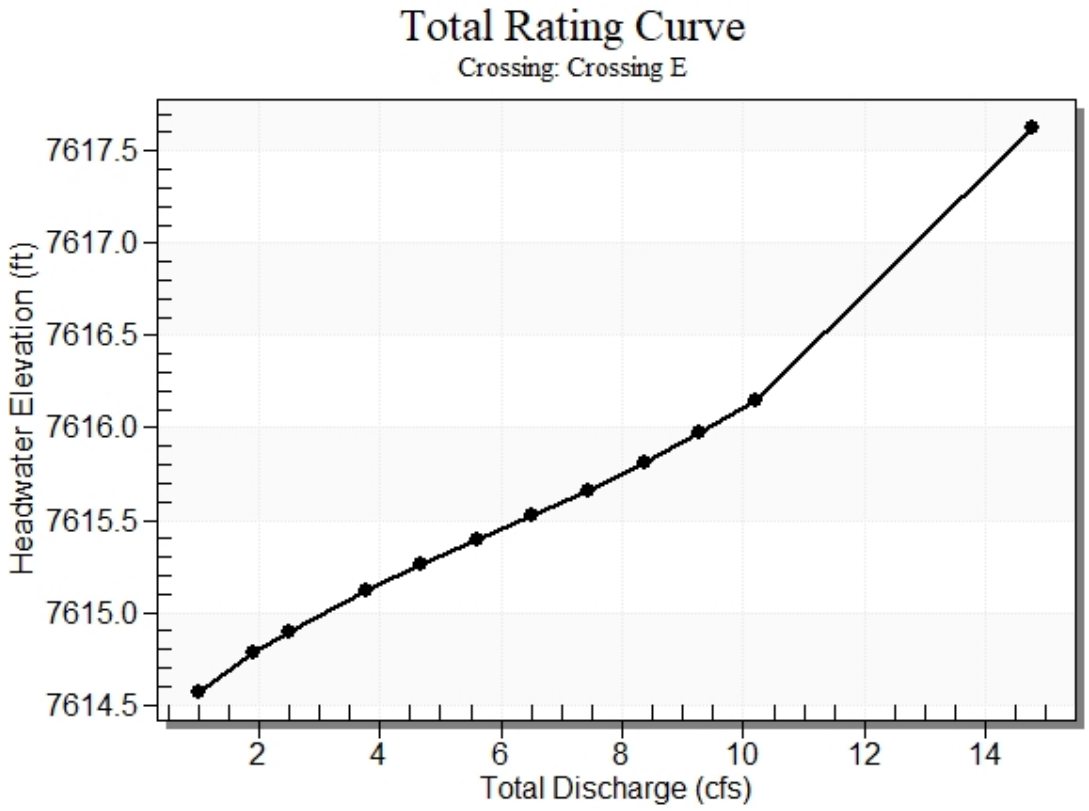

Table 2 - Culvert Summary Table: Culvert E

Total Discharge (cfs)	Culvert Discharge (cfs)	Headwater Elevation (ft)	Inlet Control Depth (ft)	Outlet Control Depth (ft)	Flow Type	Normal Depth (ft)	Critical Depth (ft)	Outlet Depth (ft)	Tailwater Depth (ft)	Outlet Velocity (ft/s)	Tailwater Velocity (ft/s)
1.00	1.00	7614.57	0.503	0.0*	1-S2n	0.304	0.369	0.304	0.105	3.787	1.487
1.92	1.92	7614.78	0.710	0.077	1-S2n	0.423	0.519	0.435	0.154	4.350	1.887
2.50	2.50	7614.90	0.828	0.0*	1-S2n	0.485	0.596	0.499	0.179	4.702	2.075
3.76	3.76	7615.12	1.052	0.407	1-S2n	0.603	0.741	0.624	0.227	5.235	2.392
4.68	4.68	7615.26	1.192	0.574	1-S2n	0.683	0.828	0.706	0.258	5.536	2.578
5.60	5.60	7615.39	1.324	0.752	1-S2n	0.758	0.909	0.784	0.286	5.802	2.739
6.52	6.52	7615.53	1.455	0.943	1-S2n	0.832	0.985	0.860	0.312	6.025	2.882
7.44	7.44	7615.66	1.592	1.143	5-S2n	0.907	1.053	0.937	0.337	6.214	3.010
8.36	8.36	7615.81	1.740	1.355	5-S2n	0.984	1.116	1.014	0.359	6.386	3.128
9.28	9.28	7615.97	1.902	1.745	5-S2n	1.066	1.176	1.066	0.381	6.717	3.235
10.20	10.20	7616.15	2.080	1.955	5-S2n	1.159	1.229	1.159	0.402	6.774	3.334

* Full Flow Headwater elevation is below inlet invert.

****

Straight Culvert

Inlet Elevation (invert): 7614.07 ft, Outlet Elevation (invert): 7613.59 ft

Culvert Length: 48.00 ft, Culvert Slope: 0.0100

****

Culvert Performance Curve Plot: Culvert E

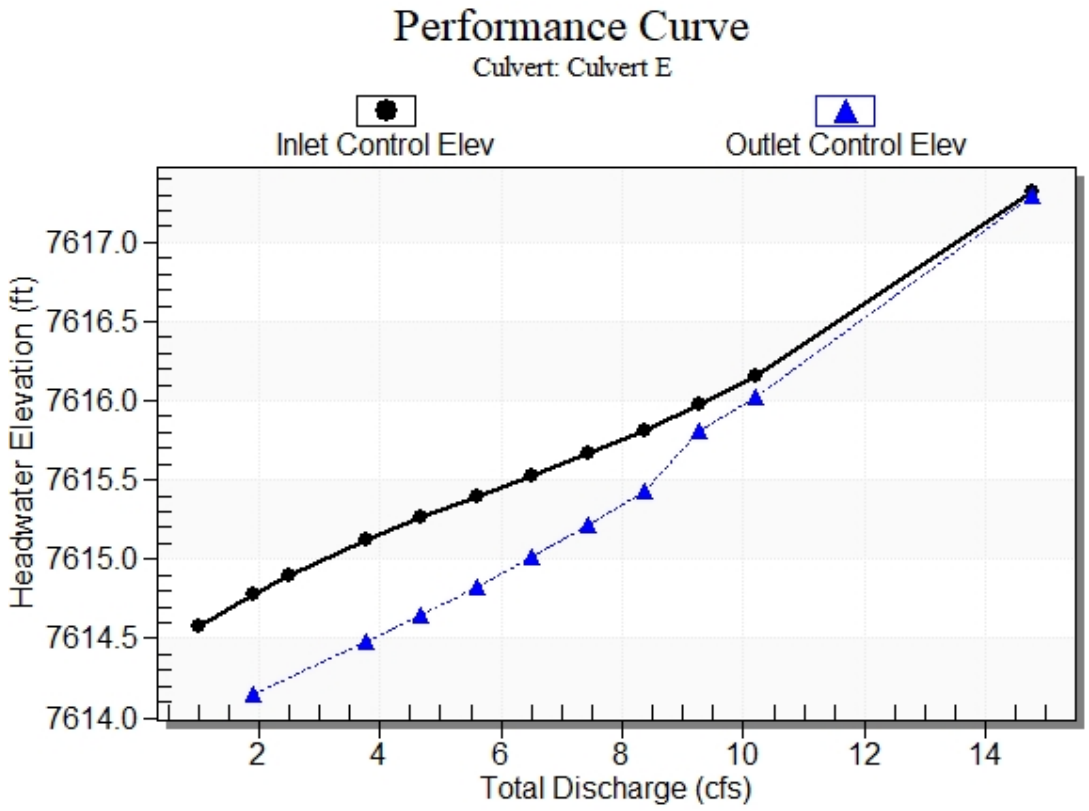

Water Surface Profile Plot for Culvert: Culvert E

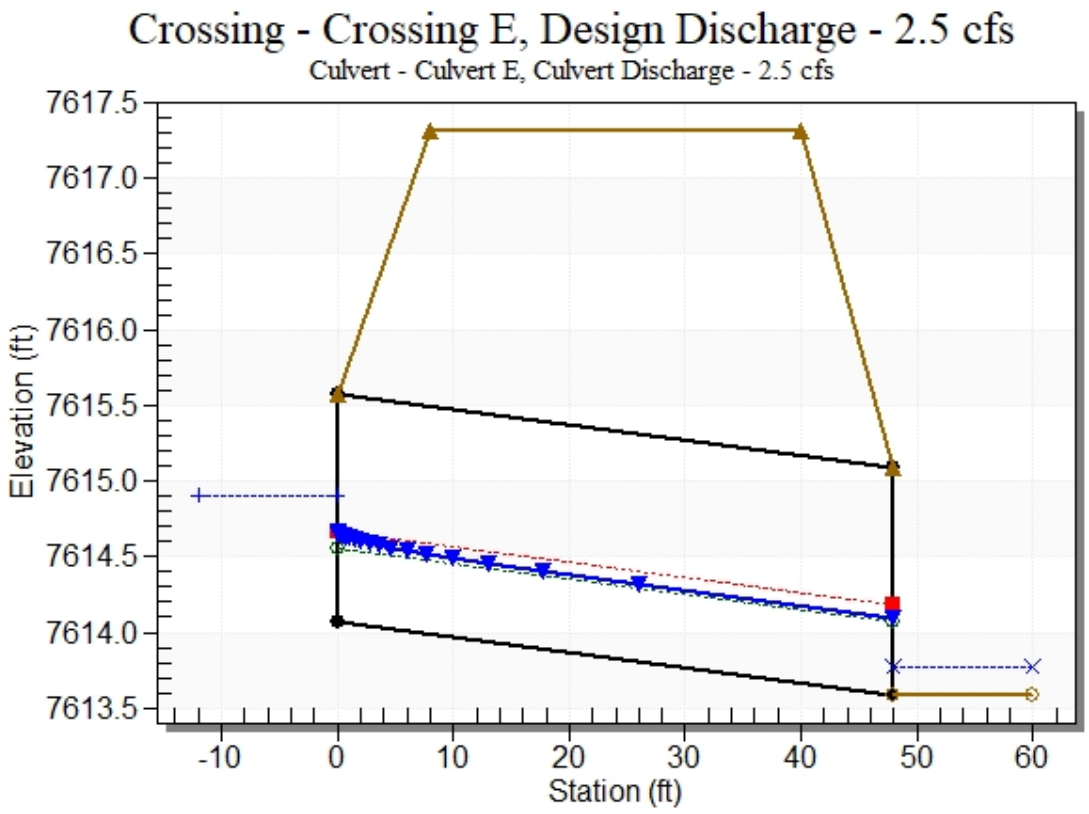

Site Data - Culvert E

Site Data Option: Culvert Invert Data

Inlet Station: 0.00 ft

Inlet Elevation: 7614.07 ft

Outlet Station: 48.00 ft

Outlet Elevation: 7613.59 ft

Number of Barrels: 1

Culvert Data Summary - Culvert E

Barrel Shape: Circular

Barrel Diameter: 1.50 ft

Barrel Material: Concrete

Embedment: 0.00 in

Barrel Manning's n: 0.0130

Culvert Type: Straight

Inlet Configuration: Grooved End Projecting

Inlet Depression: None

Table 3 - Downstream Channel Rating Curve (Crossing: Crossing E)

Flow (cfs)	Water Surface Elev (ft)	Depth (ft)	Velocity (ft/s)	Shear (psf)	Froude Number
1.00	7613.69	0.10	1.49	0.13	0.84
1.92	7613.74	0.15	1.89	0.19	0.89
2.50	7613.77	0.18	2.07	0.22	0.91
3.76	7613.82	0.23	2.39	0.28	0.94
4.68	7613.85	0.26	2.58	0.32	0.96
5.60	7613.88	0.29	2.74	0.36	0.97
6.52	7613.90	0.31	2.88	0.39	0.98
7.44	7613.93	0.34	3.01	0.42	0.99
8.36	7613.95	0.36	3.13	0.45	1.00
9.28	7613.97	0.38	3.24	0.48	1.01
10.20	7613.99	0.40	3.33	0.50	1.02

Tailwater Channel Data - Crossing E

Tailwater Channel Option: Trapezoidal Channel

Bottom Width: 6.00 ft

Side Slope (H:V): 4.00 (_:1)

Channel Slope: 0.0200

Channel Manning's n: 0.0300

Channel Invert Elevation: 7613.59 ft

Roadway Data for Crossing: Crossing E

Roadway Profile Shape: Constant Roadway Elevation

Crest Length: 100.00 ft

Crest Elevation: 7617.32 ft

Roadway Surface: Paved

Roadway Top Width: 32.00 ft

Crossing Discharge Data – Culvert F

Discharge Selection Method: Specify Minimum, Design, and Maximum Flow

Minimum Flow: 3 cfs

Design Flow: 5.9 cfs

Maximum Flow: 24.5 cfs

Table 4 - Summary of Culvert Flows at Crossing: Crossing F

Headwater Elevation (ft)	Total Discharge (cfs)	Culvert F Discharge (cfs)	Roadway Discharge (cfs)	Iterations
7605.95	3.00	3.00	0.00	1
7606.20	5.15	5.15	0.00	1
7606.27	5.90	5.90	0.00	1
7606.60	9.45	9.45	0.00	1
7606.78	11.60	11.60	0.00	1
7606.95	13.75	13.75	0.00	1
7607.10	15.90	15.90	0.00	1
7607.25	18.05	18.05	0.00	1
7607.39	20.20	20.20	0.00	1
7607.53	22.35	22.35	0.00	1
7607.68	24.50	24.50	0.00	1
7609.28	42.73	42.73	0.00	Overtopping

Rating Curve Plot for Crossing: Crossing F

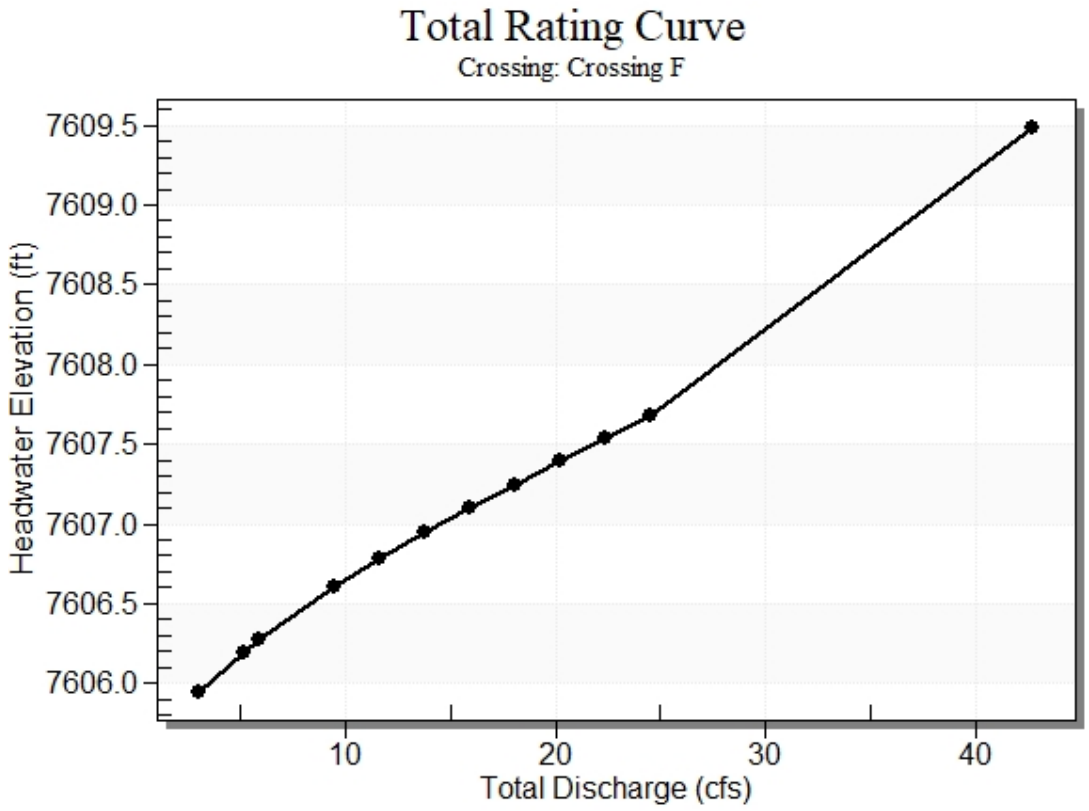

Table 5 - Culvert Summary Table: Culvert F

Total Discharge (cfs)	Culvert Discharge (cfs)	Headwater Elevation (ft)	Inlet Control Depth (ft)	Outlet Control Depth (ft)	Flow Type	Normal Depth (ft)	Critical Depth (ft)	Outlet Depth (ft)	Tailwater Depth (ft)	Outlet Velocity (ft/s)	Tailwater Velocity (ft/s)
3.00	3.00	7605.95	0.750	0.0*	1-S2n	0.341	0.564	0.357	0.199	6.785	2.212
5.15	5.15	7606.20	0.997	0.0*	1-S2n	0.445	0.745	0.466	0.273	7.867	2.662
5.90	5.90	7606.27	1.072	0.0*	1-S2n	0.475	0.800	0.498	0.295	8.228	2.787
9.45	9.45	7606.60	1.399	0.0*	1-S2n	0.601	1.022	0.642	0.385	9.143	3.254
11.60	11.60	7606.78	1.582	0.0*	1-S2n	0.666	1.142	0.727	0.432	9.437	3.473
13.75	13.75	7606.95	1.748	0.0*	1-S2n	0.727	1.248	0.795	0.475	9.895	3.664
15.90	15.90	7607.10	1.902	0.0*	1-S2n	0.785	1.343	0.865	0.515	10.188	3.833
18.05	18.05	7607.25	2.048	0.136	1-S2n	0.839	1.436	0.929	0.552	10.497	3.986
20.20	20.20	7607.39	2.190	0.311	1-S2n	0.891	1.520	0.993	0.587	10.741	4.124
22.35	22.35	7607.53	2.332	0.497	1-S2n	0.940	1.605	1.052	0.620	11.016	4.252
24.50	24.50	7607.68	2.477	0.685	1-S2n	0.989	1.682	1.114	0.651	11.204	4.371

* Full Flow Headwater elevation is below inlet invert.

****

Straight Culvert

Inlet Elevation (invert): 7605.20 ft, Outlet Elevation (invert): 7603.54 ft

Culvert Length: 56.02 ft, Culvert Slope: 0.0296

****

Culvert Performance Curve Plot: Culvert F

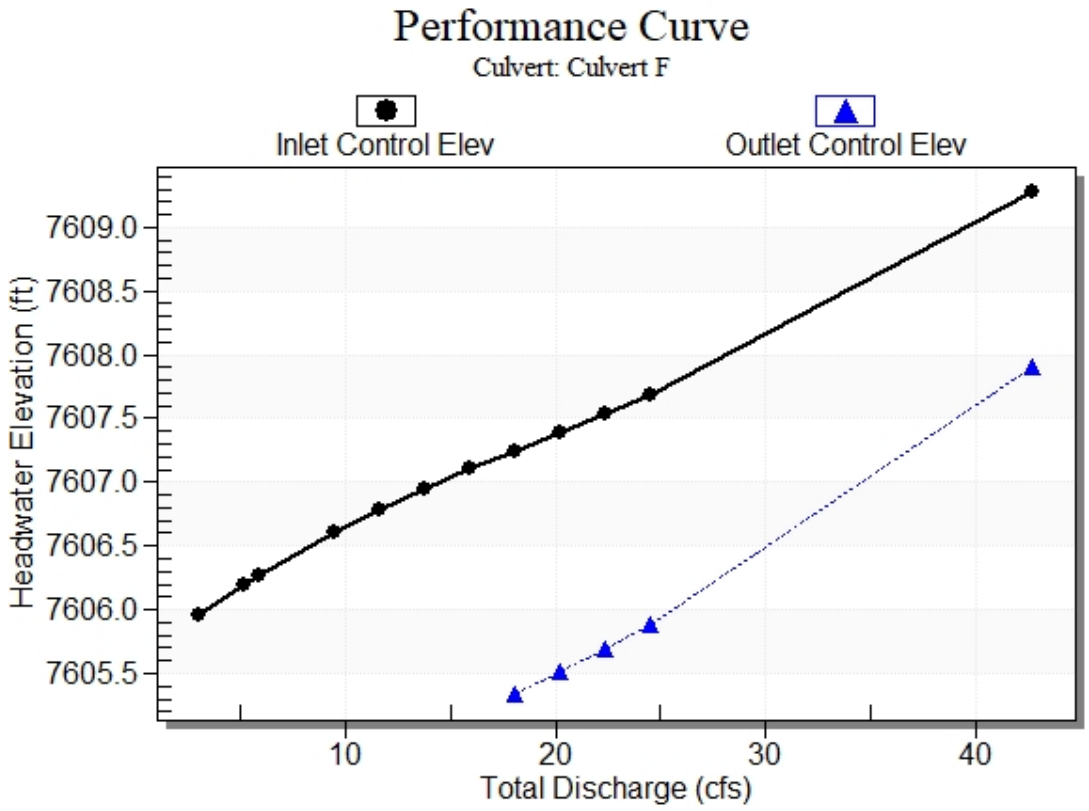

Water Surface Profile Plot for Culvert: Culvert F

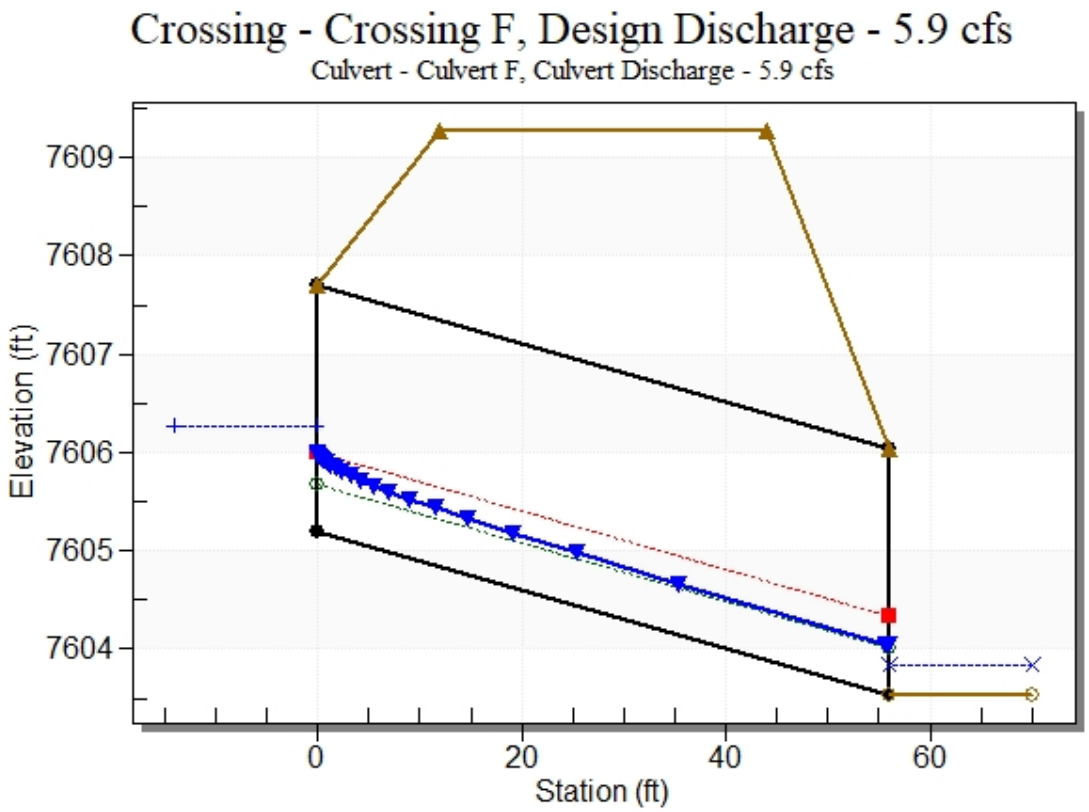

Site Data - Culvert F

Site Data Option: Culvert Invert Data

Inlet Station: 0.00 ft

Inlet Elevation: 7605.20 ft

Outlet Station: 56.00 ft

Outlet Elevation: 7603.54 ft

Number of Barrels: 1

Culvert Data Summary - Culvert F

Barrel Shape: Circular

Barrel Diameter: 2.50 ft

Barrel Material: Concrete

Embedment: 0.00 in

Barrel Manning's n: 0.0130

Culvert Type: Straight

Inlet Configuration: Grooved End Projecting

Inlet Depression: None

Table 6 - Downstream Channel Rating Curve (Crossing: Crossing F)

Flow (cfs)	Water Surface Elev (ft)	Depth (ft)	Velocity (ft/s)	Shear (psf)	Froude Number
3.00	7603.74	0.20	2.21	0.25	0.92
5.15	7603.81	0.27	2.66	0.34	0.96
5.90	7603.83	0.29	2.79	0.37	0.98
9.45	7603.93	0.39	3.25	0.48	1.01
11.60	7603.97	0.43	3.47	0.54	1.03
13.75	7604.02	0.48	3.66	0.59	1.04
15.90	7604.05	0.51	3.83	0.64	1.05
18.05	7604.09	0.55	3.99	0.69	1.07
20.20	7604.13	0.59	4.12	0.73	1.07
22.35	7604.16	0.62	4.25	0.77	1.08
24.50	7604.19	0.65	4.37	0.81	1.09

Tailwater Channel Data - Crossing F

Tailwater Channel Option: Trapezoidal Channel

Bottom Width: 6.00 ft

Side Slope (H:V): 4.00 (_:1)

Channel Slope: 0.0200

Channel Manning's n: 0.0300

Channel Invert Elevation: 7603.54 ft

Roadway Data for Crossing: Crossing F

Roadway Profile Shape: Constant Roadway Elevation

Crest Length: 100.00 ft

Crest Elevation: 7609.28 ft

Roadway Surface: Paved

Roadway Top Width: 32.00 ft

Crossing Discharge Data – Culvert H

Discharge Selection Method: Specify Minimum, Design, and Maximum Flow

Minimum Flow: 10 cfs

Design Flow: 14.6 cfs

Maximum Flow: 64.4 cfs

Table 7 - Summary of Culvert Flows at Crossing: Crossing H

Headwater Elevation (ft)	Total Discharge (cfs)	Culvert H Discharge (cfs)	Roadway Discharge (cfs)	Iterations
7572.41	10.00	10.00	0.00	1
7572.69	14.60	14.60	0.00	1
7573.04	20.88	20.88	0.00	1
7573.33	26.32	26.32	0.00	1
7573.58	31.76	31.76	0.00	1
7573.82	37.20	37.20	0.00	1
7574.04	42.64	42.64	0.00	1
7574.25	48.08	48.08	0.00	1
7574.47	53.52	53.52	0.00	1
7574.70	58.96	58.96	0.00	1
7574.93	64.40	64.40	0.00	1
7576.34	91.21	91.21	0.00	Overtopping

Rating Curve Plot for Crossing: Crossing H

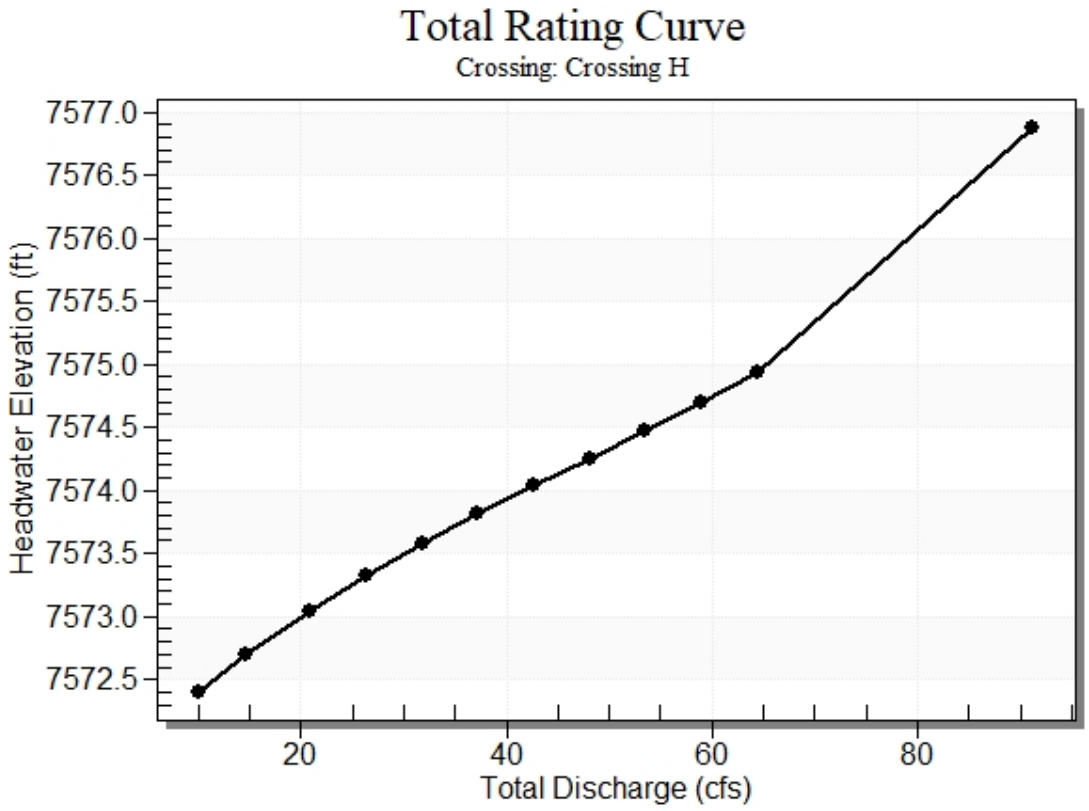

Table 8 - Culvert Summary Table: Culvert H

Total Discharge (cfs)	Culvert Discharge (cfs)	Headwater Elevation (ft)	Inlet Control Depth (ft)	Outlet Control Depth (ft)	Flow Type	Normal Depth (ft)	Critical Depth (ft)	Outlet Depth (ft)	Tailwater Depth (ft)	Outlet Velocity (ft/s)	Tailwater Velocity (ft/s)
10.00	10.00	7572.41	1.276	0.0*	1-S2n	0.583	0.954	0.615	0.343	8.459	3.115
14.60	14.60	7572.69	1.560	0.0*	1-S2n	0.704	1.159	0.757	0.426	9.212	3.536
20.88	20.88	7573.04	1.912	0.0*	1-S2n	0.841	1.398	0.916	0.521	10.036	3.975
26.32	26.32	7573.33	2.197	0.087	1-S2n	0.946	1.580	1.040	0.593	10.588	4.278
31.76	31.76	7573.58	2.452	0.336	1-S2n	1.043	1.743	1.158	0.658	11.024	4.538
37.20	37.20	7573.82	2.686	0.583	1-S2n	1.132	1.889	1.270	0.718	11.400	4.764
42.64	42.64	7574.04	2.908	0.840	1-S2n	1.217	2.029	1.373	0.774	11.762	4.966
48.08	48.08	7574.25	3.125	1.106	1-S2n	1.298	2.162	1.475	0.826	12.067	5.150
53.52	53.52	7574.47	3.343	1.378	1-S2n	1.376	2.284	1.572	0.875	12.351	5.318
58.96	58.96	7574.70	3.567	1.662	5-S2n	1.452	2.403	1.666	0.922	12.621	5.472
64.40	64.40	7574.93	3.801	1.953	5-S2n	1.526	2.513	1.758	0.966	12.884	5.617

* Full Flow Headwater elevation is below inlet invert.

****

Straight Culvert

Inlet Elevation (invert): 7571.13 ft, Outlet Elevation (invert): 7569.45 ft

Culvert Length: 70.02 ft, Culvert Slope: 0.0240

****

Culvert Performance Curve Plot: Culvert H

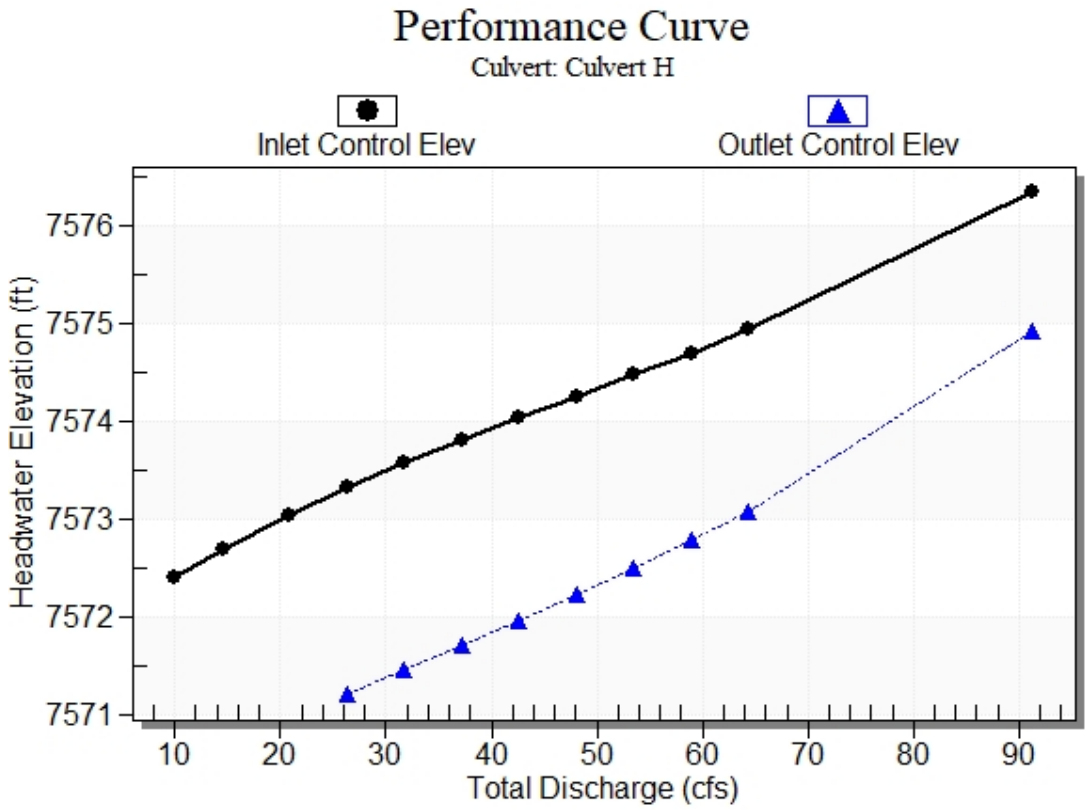

Water Surface Profile Plot for Culvert: Culvert H

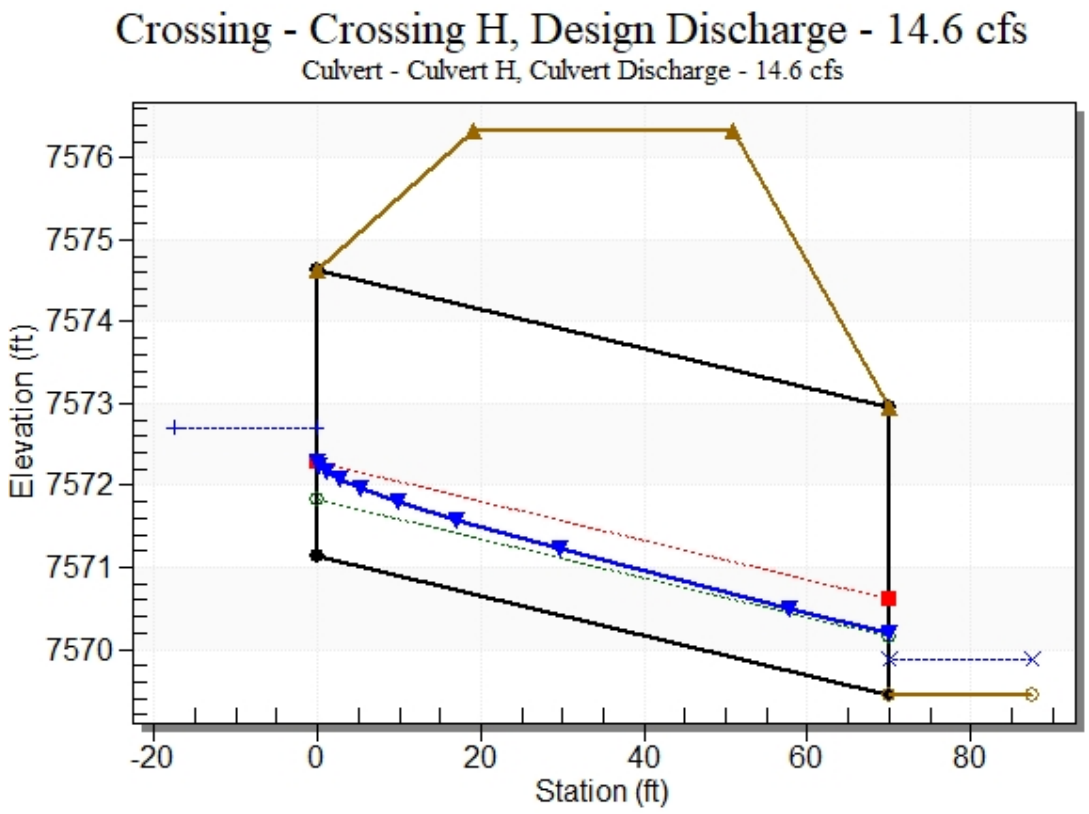

Site Data - Culvert H

Site Data Option: Culvert Invert Data

Inlet Station: 0.00 ft

Inlet Elevation: 7571.13 ft

Outlet Station: 70.00 ft

Outlet Elevation: 7569.45 ft

Number of Barrels: 1

Culvert Data Summary - Culvert H

Barrel Shape: Circular

Barrel Diameter: 3.50 ft

Barrel Material: Concrete

Embedment: 0.00 in

Barrel Manning's n: 0.0130

Culvert Type: Straight

Inlet Configuration: Grooved End Projecting

Inlet Depression: None

Table 9 - Downstream Channel Rating Curve (Crossing: Crossing H)

Flow (cfs)	Water Surface Elev (ft)	Depth (ft)	Velocity (ft/s)	Shear (psf)	Froude Number
10.00	7569.79	0.34	3.11	0.43	1.00
14.60	7569.88	0.43	3.54	0.53	1.04
20.88	7569.97	0.52	3.97	0.65	1.07
26.32	7570.04	0.59	4.28	0.74	1.09
31.76	7570.11	0.66	4.54	0.82	1.10
37.20	7570.17	0.72	4.76	0.90	1.11
42.64	7570.22	0.77	4.97	0.97	1.13
48.08	7570.28	0.83	5.15	1.03	1.14
53.52	7570.33	0.88	5.32	1.09	1.14
58.96	7570.37	0.92	5.47	1.15	1.15
64.40	7570.42	0.97	5.62	1.21	1.16

Tailwater Channel Data - Crossing H

Tailwater Channel Option: Trapezoidal Channel

Bottom Width: 8.00 ft

Side Slope (H:V): 4.00 (_:1)

Channel Slope: 0.0200

Channel Manning's n: 0.0300

Channel Invert Elevation: 7569.45 ft

Roadway Data for Crossing: Crossing H

Roadway Profile Shape: Constant Roadway Elevation

Crest Length: 100.00 ft

Crest Elevation: 7576.34 ft

Roadway Surface: Paved

Roadway Top Width: 32.00 ft

Culvert I Analysis
(Existing 48" RCP crossing Steppler Road)

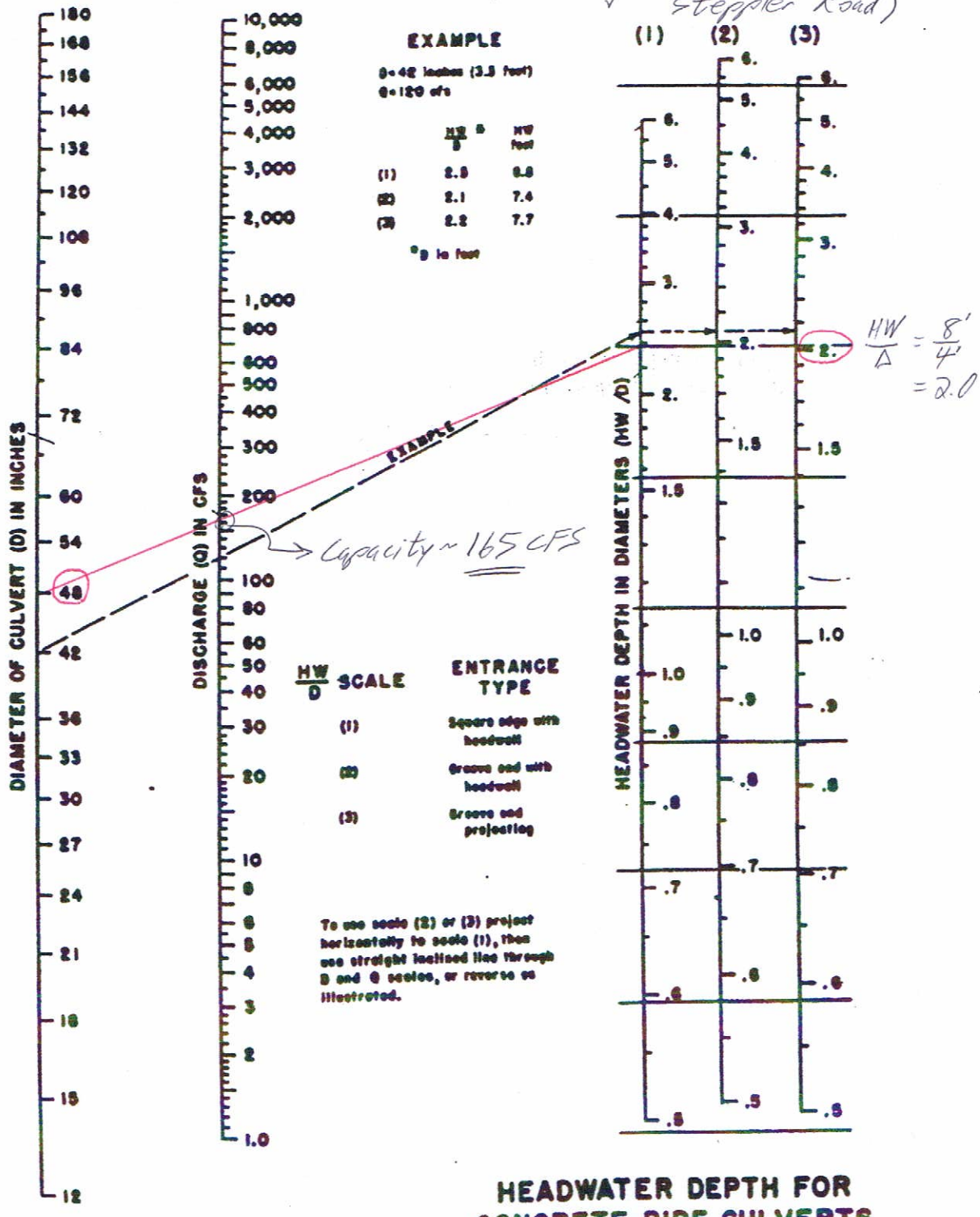

HEADWATER SCALES 2 & 3
REVISED MAY 1964

BUREAU OF PUBLIC ROADS JAN. 1963

HEADWATER DEPTH FOR CONCRETE PIPE CULVERTS WITH INLET CONTROL

Determination of Culvert Headwater and Outlet Protection

Project: Abert Ranch
Basin ID: E

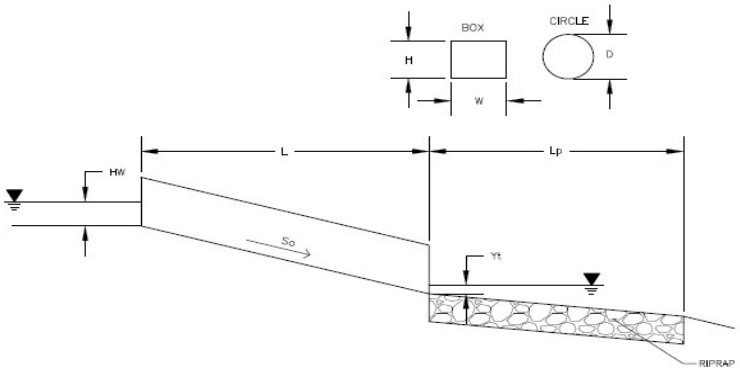

Soil Type:
Choose One:
(•) Sandy
( ) Non-Sandy

Supercritical Flow! Using Da to calculate protection type.

Design Information (Input):

	Design Discharge	Q =	10.2	cfs
Circular Culvert:				
	Barrel Diameter in Inches	D =	18	inches
	Inlet Edge Type (Choose from pull-down list)		Grooved End Projection	
Box Culvert:			**OR**	
	Barrel Height (Rise) in Feet	Height (Rise) =		ft
	Barrel Width (Span) in Feet	Width (Span) =		ft
	Inlet Edge Type (Choose from pull-down list)			
	Number of Barrels	No =	1	
	Inlet Elevation	Elev IN =	7614.07	ft
	Outlet Elevation **OR** Slope	Elev OUT =	7613.59	ft
	Culvert Length	L =	48	ft
	Manning's Roughness	n =	0.013	
	Bend Loss Coefficient	k_b =	0	
	Exit Loss Coefficient	k_x =	1	
	Tailwater Surface Elevation	Elev Y_t =	7613.99	ft
	Max Allowable Channel Velocity	V =	5	ft/s

Required Protection (Output):

Tailwater Surface Height	Y_t =	0.40	ft
Flow Area at Max Channel Velocity	A_t =	2.04	ft^2
Culvert Cross Sectional Area Available	A =	1.77	ft^2
Entrance Loss Coefficient	k_e =	0.20	
Friction Loss Coefficient	k_f =	0.87	
Sum of All Losses Coefficients	k_s =	2.07	ft
Culvert Normal Depth	Y_n =	1.19	ft
Culvert Critical Depth	Y_c =	1.23	ft
Tailwater Depth for Design	d =	1.36	ft
Adjusted Diameter **OR** Adjusted Rise	D_a =	1.34	ft
Expansion Factor	1/(2*tan(Θ)) =	2.35	
Flow/Diameter$^{2.5}$ **OR** Flow/(Span * Rise$^{1.5}$)	Q/D^2.5 =	3.70	$ft^{0.5}/s$
Froude Number	Fr =	1.08	**Supercritical!**
Tailwater/Adjusted Diameter **OR** Tailwater/Adjusted Rise	Yt/D =	0.30	
Inlet Control Headwater	HW_I =	2.08	ft
Outlet Control Headwater	HW_O =	1.96	
Design Headwater Elevation	**HW =**	**7,616.15**	**ft**
Headwater/Diameter OR Headwater/Rise Ratio	**HW/D =**	**1.39**	
Minimum Theoretical Riprap Size	d_{50} =	8	in
Nominal Riprap Size	d_{50} =	9	in
UDFCD Riprap Type	**Type =**	**L**	
Length of Protection	**L_p =**	**9**	**ft**
Width of Protection	**T =**	**6**	**ft**

Determination of Culvert Headwater and Outlet Protection

Project: Abert Ranch
Basin ID: F

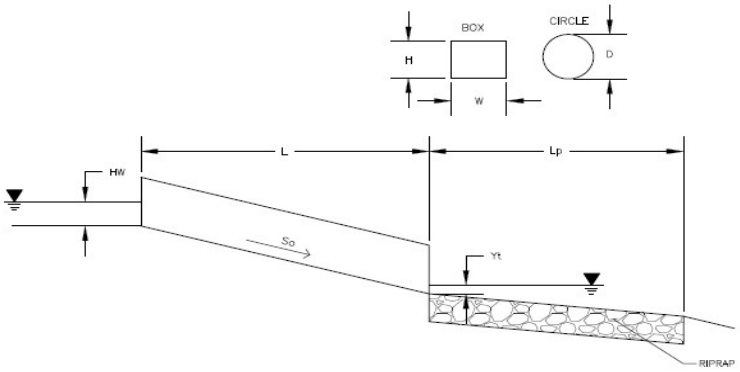

Soil Type:
Choose One:
(•) Sandy
( ) Non-Sandy

Supercritical Flow! Using Da to calculate protection type.

Design Information (Input):

	Design Discharge	Q =	24.5	cfs
Circular Culvert:				
	Barrel Diameter in Inches	D =	30	inches
	Inlet Edge Type (Choose from pull-down list)		Grooved End Projection	
Box Culvert:			**OR**	
	Barrel Height (Rise) in Feet	Height (Rise) =		ft
	Barrel Width (Span) in Feet	Width (Span) =		ft
	Inlet Edge Type (Choose from pull-down list)			
	Number of Barrels	No =	1	
	Inlet Elevation	Elev IN =	7605.2	ft
	Outlet Elevation **OR** Slope	Elev OUT =	7603.54	ft
	Culvert Length	L =	56	ft
	Manning's Roughness	n =	0.013	
	Bend Loss Coefficient	k_b =	0	
	Exit Loss Coefficient	k_x =	1	
	Tailwater Surface Elevation	Elev Y_t =	7604.19	ft
	Max Allowable Channel Velocity	V =	5	ft/s

Required Protection (Output):

Tailwater Surface Height	Y_t =	0.65	ft
Flow Area at Max Channel Velocity	A_t =	4.90	ft^2
Culvert Cross Sectional Area Available	A =	4.91	ft^2
Entrance Loss Coefficient	k_e =	0.20	
Friction Loss Coefficient	k_f =	0.51	
Sum of All Losses Coefficients	k_s =	1.71	ft
Culvert Normal Depth	Y_n =	1.01	ft
Culvert Critical Depth	Y_c =	1.69	ft
Tailwater Depth for Design	d =	2.09	ft
Adjusted Diameter **OR** Adjusted Rise	D_a =	1.76	ft
Expansion Factor	1/(2*tan(Θ)) =	4.64	
Flow/Diameter$^{2.5}$ **OR** Flow/(Span * Rise$^{1.5}$)	Q/D^2.5 =	2.48	$ft^{0.5}/s$
Froude Number	Fr =	2.65	**Supercritical!**
Tailwater/Adjusted Diameter **OR** Tailwater/Adjusted Rise	Yt/D =	0.37	
Inlet Control Headwater	HW_I =	2.48	ft
Outlet Control Headwater	HW_O =	1.10	
Design Headwater Elevation	**HW =**	**7,607.68**	**ft**
Headwater/Diameter OR Headwater/Rise Ratio	**HW/D =**	**0.99**	
Minimum Theoretical Riprap Size	d_{50} =	10	in
Nominal Riprap Size	d_{50} =	12	in
UDFCD Riprap Type	**Type =**	**M**	
Length of Protection	**L_p =**	**24**	**ft**
Width of Protection	**T =**	**8**	**ft**

Determination of Culvert Headwater and Outlet Protection

Project: Abert Ranch
Basin ID: H

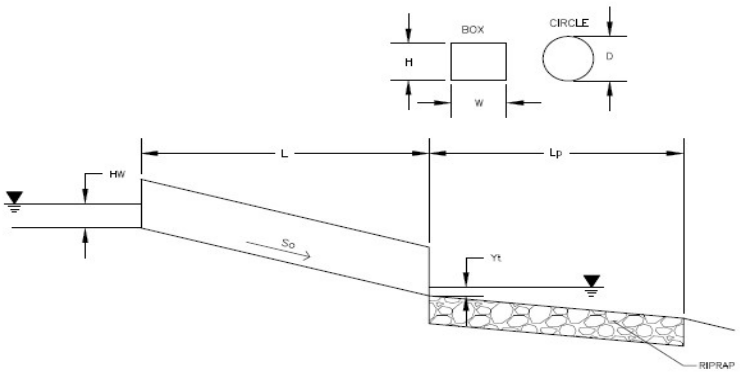

Soil Type:
Choose One:
(•) Sandy
( ) Non-Sandy

Supercritical Flow! Using Da to calculate protection type.

Design Information (Input):

	Design Discharge	Q =	64.4	cfs
Circular Culvert:				
	Barrel Diameter in Inches	D =	42	inches
	Inlet Edge Type (Choose from pull-down list)		Grooved End Projection	
Box Culvert:			**OR**	
	Barrel Height (Rise) in Feet	Height (Rise) =		ft
	Barrel Width (Span) in Feet	Width (Span) =		ft
	Inlet Edge Type (Choose from pull-down list)			
	Number of Barrels	No =	1	
	Inlet Elevation	Elev IN =	7571.13	ft
	Outlet Elevation **OR** Slope	Elev OUT =	7569.45	ft
	Culvert Length	L =	70	ft
	Manning's Roughness	n =	0.013	
	Bend Loss Coefficient	k_b =	0	
	Exit Loss Coefficient	k_x =	1	
	Tailwater Surface Elevation	Elev Y_t =	7570.42	ft
	Max Allowable Channel Velocity	V =	5	ft/s

Required Protection (Output):

Tailwater Surface Height	Y_t =	0.97	ft
Flow Area at Max Channel Velocity	A_t =	12.88	ft^2
Culvert Cross Sectional Area Available	A =	9.62	ft^2
Entrance Loss Coefficient	k_e =	0.20	
Friction Loss Coefficient	k_f =	0.41	
Sum of All Losses Coefficients	k_s =	1.61	ft
Culvert Normal Depth	Y_n =	1.57	ft
Culvert Critical Depth	Y_c =	2.52	ft
Tailwater Depth for Design	d =	3.01	ft
Adjusted Diameter **OR** Adjusted Rise	D_a =	2.53	ft
Expansion Factor	1/(2*tan(Θ)) =	4.40	
Flow/Diameter$^{2.5}$ **OR** Flow/(Span * Rise$^{1.5}$)	Q/D^2.5 =	2.81	$ft^{0.5}/s$
Froude Number	Fr =	2.49	**Supercritical!**
Tailwater/Adjusted Diameter **OR** Tailwater/Adjusted Rise	Yt/D =	0.38	
Inlet Control Headwater	HW_I =	3.80	ft
Outlet Control Headwater	HW_O =	2.45	
Design Headwater Elevation	**HW =**	**7,574.93**	**ft**
Headwater/Diameter OR Headwater/Rise Ratio	**HW/D =**	**1.09**	
Minimum Theoretical Riprap Size	d_{50} =	14	in
Nominal Riprap Size	d_{50} =	18	in
UDFCD Riprap Type	**Type =**	**H**	
Length of Protection	**L_p =**	**35**	**ft**
Width of Protection	**T =**	**12**	**ft**

Determination of Culvert Headwater and Outlet Protection

Project: Abert Ranch
Basin ID: I

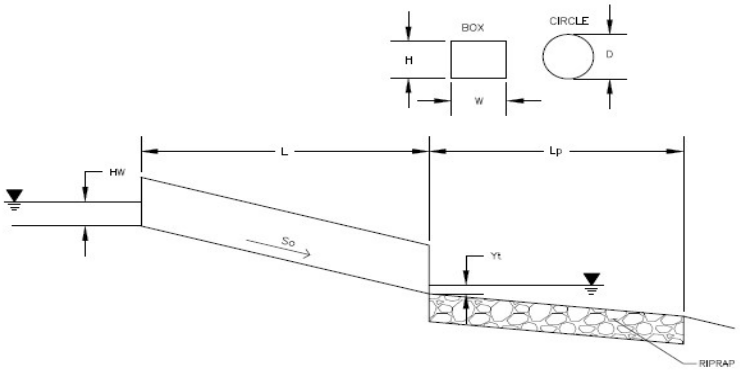

Soil Type:
Choose One:
(•) Sandy
( ) Non-Sandy

Supercritical Flow! Using Da to calculate protection type.

Design Information (Input):

	Design Discharge	Q = 121.6	cfs
Circular Culvert:			
	Barrel Diameter in Inches	D = 42	inches
	Inlet Edge Type (Choose from pull-down list)	Grooved End Projection	
Box Culvert:		**OR**	
	Barrel Height (Rise) in Feet	Height (Rise) =	ft
	Barrel Width (Span) in Feet	Width (Span) =	ft
	Inlet Edge Type (Choose from pull-down list)		
	Number of Barrels	No = 1	
	Inlet Elevation	Elev IN = 7539.5	ft
	Outlet Elevation **OR** Slope	Elev OUT = 7538	ft
	Culvert Length	L = 100	ft
	Manning's Roughness	n = 0.013	
	Bend Loss Coefficient	k_b = 0	
	Exit Loss Coefficient	k_x = 1	
	Tailwater Surface Elevation	Elev Y_t = 7539.41	ft
	Max Allowable Channel Velocity	V = 5	ft/s

Required Protection (Output):

	Tailwater Surface Height	Y_t = 1.41	ft
	Flow Area at Max Channel Velocity	A_t = 24.32	ft^2
	Culvert Cross Sectional Area Available	A = 9.62	ft^2
	Entrance Loss Coefficient	k_e = 0.20	
	Friction Loss Coefficient	k_f = 0.59	
	Sum of All Losses Coefficients	k_s = 1.79	ft
	Culvert Normal Depth	Y_n = 2.82	ft
	Culvert Critical Depth	Y_c = 3.26	ft
	Tailwater Depth for Design	d = 3.38	ft
	Adjusted Diameter **OR** Adjusted Rise	D_a = 3.16	ft
	Expansion Factor	1/(2*tan(Θ)) = 2.65	
	Flow/Diameter$^{2.5}$ **OR** Flow/(Span * Rise$^{1.5}$)	Q/D^2.5 = 5.31	$ft^{0.5}/s$
	Froude Number	Fr = 1.49	**Supercritical!**
	Tailwater/Adjusted Diameter **OR** Tailwater/Adjusted Rise	Yt/D = 0.45	
	Inlet Control Headwater	HW_I = 7.46	ft
	Outlet Control Headwater	HW_O = 6.31	
	Design Headwater Elevation	**HW = 7,546.96**	**ft**
	Headwater/Diameter OR Headwater/Rise Ratio	**HW/D = 2.13**	**HW/D > 1.5!**
	Minimum Theoretical Riprap Size	d_{50} = 16	in
	Nominal Riprap Size	d_{50} = 18	in
	UDFCD Riprap Type	**Type = H**	
	Length of Protection	**L_p = 35**	**ft**
	Width of Protection	**T = 17**	**ft**

APPENDIX C

DETENTION POND CALCULATIONS

ABERT RANCH SUBDIVISION
COMPOSITE IMPERVIOUS AREAS

IMPERVIOUS AREAS

BASIN	TOTAL AREA (AC)	(AC)	SUB-AREA 1 DEVELOPMENT/ COVER	PERCENT IMPERVIOUS	AREA (AC)	SUB-AREA 2 DEVELOPMENT/ COVER	PERCENT IMPERVIOUS	(AC)	SUB-AREA 3 DEVELOPMENT/ COVER	PERCENT IMPERVIOUS	WEIGHTED % IMP
C	1.28	1.28	2.5-AC LOTS	11.0							11.000
E	3.12	3.12	2.5-AC LOTS	11.0							11.000
C,E	4.40										11.000
B	2.93	2.93	2.5-AC LOTS	11.0							11.000
F	3.78	3.78	2.5-AC LOTS	11.0							11.000
C,E,B,F	11.11										11.000
G	2.27	2.27	2.5-AC LOTS	11.0							11.000
D11	15.60	15.60	5-AC LOTS	7.0							7.000
H	5.69	5.69	2.5-AC LOTS	11.0							11.000
DPF,G,D11,H	34.67										9.200
A	10.74	10.74	2.5-AC LOTS	11.0							11.000
D12	11.00	11.00	5-AC LOTS	7.0							7.000
OI1	13.12	13.12	5-AC LOTS	7.0							7.000
I	25.60	16.60	5-AC LOTS	7.0	9.00	2.5-AC LOTS	11.0				8.406
DPH,D12,OI1,I	95.13										8.632

DETENTION BASIN STAGE-STORAGE TABLE BUILDER

UD-Detention, Version 3.07 (February 2017)

Project: ABERT RANCH

Basin ID: I

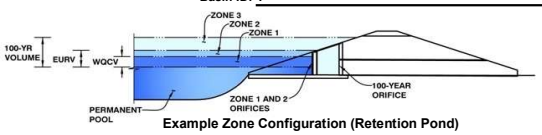

Example Zone Configuration (Retention Pond)

Required Volume Calculation

Selected BMP Type =	EDB		
Watershed Area =	95.10	acres	
Watershed Length =	2,800	ft	
Watershed Slope =	0.041	ft/ft	
Watershed Imperviousness =	8.60%	percent	
Percentage Hydrologic Soil Group A =	0.0%	percent	
Percentage Hydrologic Soil Group B =	100.0%	percent	
Percentage Hydrologic Soil Groups C/D =	0.0%	percent	
Desired WQCV Drain Time =	40.0	hours	
Location for 1-hr Rainfall Depths =	User Input		
Water Quality Capture Volume (WQCV) =	0.466	acre-feet	
Excess Urban Runoff Volume (EURV) =	0.759	acre-feet	
2-yr Runoff Volume (P1 = 1.19 in.) =	0.514	acre-feet	1.19 inches
5-yr Runoff Volume (P1 = 1.5 in.) =	0.810	acre-feet	1.50 inches
10-yr Runoff Volume (P1 = 1.75 in.) =	1.991	acre-feet	1.75 inches
25-yr Runoff Volume (P1 = 2 in.) =	5.595	acre-feet	2.00 inches
50-yr Runoff Volume (P1 = 2.25 in.) =	7.841	acre-feet	2.25 inches
100-yr Runoff Volume (P1 = 2.52 in.) =	10.774	acre-feet	2.52 inches
500-yr Runoff Volume (P1 = 3.07 in.) =	16.086	acre-feet	3.07 inches
Approximate 2-yr Detention Volume =	0.477	acre-feet	
Approximate 5-yr Detention Volume =	0.758	acre-feet	
Approximate 10-yr Detention Volume =	1.686	acre-feet	
Approximate 25-yr Detention Volume =	2.410	acre-feet	
Approximate 50-yr Detention Volume =	2.510	acre-feet	
Approximate 100-yr Detention Volume =	3.272	acre-feet	

Optional User Override 1-hr Precipitation

Stage-Storage Calculation

Zone 1 Volume (WQCV) =	0.466	acre-feet
Zone 2 Volume (EURV - Zone 1) =	0.293	acre-feet
Zone 3 Volume (100-year - Zones 1 & 2) =	2.512	acre-feet
Total Detention Basin Volume =	3.272	acre-feet

Depth Increment = 2 ft

Stage - Storage Description	Stage (ft)	Optional Override Stage (ft)	Length (ft)	Width (ft)	Area (ft^2)	Optional Override Area (ft^2)	Area (acre)	Volume (ft^3)	Volume (ac-ft)
Top of Micropool	--	0.00	--	--	--	10	0.000		
Bot EL=7543.0	--	1.00	--	--	--	3,154	0.072	1,551	0.036
	--	2.00	--	--	--	4,061	0.093	5,149	0.118
	--	4.00	--	--	--	9,656	0.222	18,906	0.434
	--	6.00	--	--	--	16,274	0.374	44,836	1.029
	--	8.00	--	--	--	25,480	0.585	86,590	1.988
	--	10.00	--	--	--	39,095	0.897	151,165	3.470
Spillway=7552.9	--	11.00	--	--	--	46,559	1.069	193,992	4.453
	--	12.00	--	--	--	54,023	1.240	244,283	5.608
Top EL=7555.0	--	13.00	--	--	--	61,500	1.412	302,045	6.934
	--		--	--	--				
	--		--	--	--				
	--		--	--	--				
	--		--	--	--				
	--		--	--	--				
	--		--	--	--				
	--		--	--	--				
	--		--	--	--				
	--		--	--	--				
	--		--	--	--				
	--		--	--	--				
	--		--	--	--				
	--		--	--	--				
	--		--	--	--				
	--		--	--	--				
	--		--	--	--				
	--		--	--	--				
	--		--	--	--				
	--		--	--	--				
	--		--	--	--				
	--		--	--	--				

Detention Basin Outlet Structure Design

UD-Detention, Version 3.07 (February 2017)

Project: ABERT RANCH

Basin ID: I

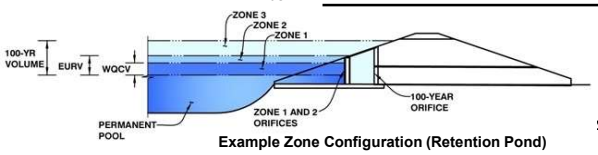

Example Zone Configuration (Retention Pond)

	Stage (ft)	Zone Volume (ac-ft)	Outlet Type
Zone 1 (WQCV)	4.15	0.466	Orifice Plate
Zone 2 (EURV)	5.22	0.293	Orifice Plate
Zone 3 (100-year)	9.78	2.512	Weir&Pipe (Restrict)
		3.272	Total

User Input: Orifice at Underdrain Outlet (typically used to drain WQCV in a Filtration BMP)

Underdrain Orifice Invert Depth =	N/A	ft (distance below the filtration media surface)	Underdrain Orifice Area =	N/A	ft^2
Underdrain Orifice Diameter =	N/A	inches	Underdrain Orifice Centroid =	N/A	feet

Calculated Parameters for Underdrain

User Input: Orifice Plate with one or more orifices or Elliptical Slot Weir (typically used to drain WQCV and/or EURV in a sedimentation BMP)

Invert of Lowest Orifice =	0.00	ft (relative to basin bottom at Stage = 0 ft)	WQ Orifice Area per Row =	1.403E-02	ft^2
Depth at top of Zone using Orifice Plate =	5.22	ft (relative to basin bottom at Stage = 0 ft)	Elliptical Half-Width =	N/A	feet
Orifice Plate: Orifice Vertical Spacing =	14.30	inches	Elliptical Slot Centroid =	N/A	feet
Orifice Plate: Orifice Area per Row =	2.02	sq. inches (diameter = 1-9/16 inches)	Elliptical Slot Area =	N/A	ft^2

Calculated Parameters for Plate

User Input: Stage and Total Area of Each Orifice Row (numbered from lowest to highest)

	Row 1 (required)	Row 2 (optional)	Row 3 (optional)	Row 4 (optional)	Row 5 (optional)	Row 6 (optional)	Row 7 (optional)	Row 8 (optional)
Stage of Orifice Centroid (ft)	0.00	1.74	3.48					
Orifice Area (sq. inches)	2.02	2.02	2.02					

	Row 9 (optional)	Row 10 (optional)	Row 11 (optional)	Row 12 (optional)	Row 13 (optional)	Row 14 (optional)	Row 15 (optional)	Row 16 (optional)
Stage of Orifice Centroid (ft)								
Orifice Area (sq. inches)								

User Input: Vertical Orifice (Circular or Rectangular)

	Not Selected	Not Selected	
Invert of Vertical Orifice =	N/A	N/A	ft (relative to basin bottom at Stage = 0 ft)
Depth at top of Zone using Vertical Orifice =	N/A	N/A	ft (relative to basin bottom at Stage = 0 ft)
Vertical Orifice Diameter =	N/A	N/A	inches

Calculated Parameters for Vertical Orifice

	Not Selected	Not Selected	
Vertical Orifice Area =	N/A	N/A	ft^2
Vertical Orifice Centroid =	N/A	N/A	feet

User Input: Overflow Weir (Dropbox) and Grate (Flat or Sloped)

	Zone 3 Weir	Not Selected	
Overflow Weir Front Edge Height, Ho =	8.90	N/A	ft (relative to basin bottom at Stage = 0 ft)
Overflow Weir Front Edge Length =	10.00	N/A	feet
Overflow Weir Slope =	0.00	N/A	H:V (enter zero for flat grate)
Horiz. Length of Weir Sides =	10.00	N/A	feet
Overflow Grate Open Area % =	70%	N/A	%, grate open area/total area
Debris Clogging % =	50%	N/A	%

Calculated Parameters for Overflow Weir

	Zone 3 Weir	Not Selected	
Height of Grate Upper Edge, H_t =	8.90	N/A	feet
Over Flow Weir Slope Length =	10.00	N/A	feet
Grate Open Area / 100-yr Orifice Area =	10.27	N/A	should be ≥ 4
Overflow Grate Open Area w/o Debris =	70.00	N/A	ft^2
Overflow Grate Open Area w/ Debris =	35.00	N/A	ft^2

User Input: Outlet Pipe w/ Flow Restriction Plate (Circular Orifice, Restrictor Plate, or Rectangular Orifice)

	Zone 3 Restrictor	Not Selected	
Depth to Invert of Outlet Pipe =	2.50	N/A	ft (distance below basin bottom at Stage = 0 ft)
Outlet Pipe Diameter =	42.00	N/A	inches
Restrictor Plate Height Above Pipe Invert =	28.00		inches

Calculated Parameters for Outlet Pipe w/ Flow Restriction Plate

	Zone 3 Restrictor	Not Selected	
Outlet Orifice Area =	6.81	N/A	ft^2
Outlet Orifice Centroid =	1.31	N/A	feet
Half-Central Angle of Restrictor Plate on Pipe =	1.91	N/A	radians

User Input: Emergency Spillway (Rectangular or Trapezoidal)

Spillway Invert Stage=	10.90	ft (relative to basin bottom at Stage = 0 ft)
Spillway Crest Length =	65.00	feet
Spillway End Slopes =	4.00	H:V
Freeboard above Max Water Surface =	1.00	feet

Calculated Parameters for Spillway

Spillway Design Flow Depth=	0.95	feet
Stage at Top of Freeboard =	12.85	feet
Basin Area at Top of Freeboard =	1.39	acres

Routed Hydrograph Results

Design Storm Return Period =	WQCV	EURV	2 Year	5 Year	10 Year	25 Year	50 Year	100 Year	500 Year
One-Hour Rainfall Depth (in) =	0.53	1.07	1.19	1.50	1.75	2.00	2.25	2.52	3.07
Calculated Runoff Volume (acre-ft) =	0.466	0.759	0.514	0.810	1.991	5.595	7.841	10.774	16.086
OPTIONAL Override Runoff Volume (acre-ft) =									
Inflow Hydrograph Volume (acre-ft) =	0.466	0.758	0.514	0.809	1.989	5.588	7.834	10.756	16.073
Predevelopment Unit Peak Flow, q (cfs/acre) =	0.00	0.00	0.01	0.02	0.24	0.77	1.06	1.42	2.04
Predevelopment Peak Q (cfs) =	0.0	0.0	1.3	2.3	22.6	72.9	100.7	134.7	194.1
Peak Inflow Q (cfs) =	8.8	14.2	9.7	15.1	36.8	101.5	141.1	191.9	283.0
Peak Outflow Q (cfs) =	0.3	0.4	0.3	0.4	0.5	57.4	98.6	113.9	233.6
Ratio Peak Outflow to Predevelopment Q =	N/A	N/A	N/A	0.2	0.0	0.8	1.0	0.8	1.2
Structure Controlling Flow =	Plate	Plate	Plate	Plate	Plate	Overflow Grate 1	Overflow Grate 1	Outlet Plate 1	Spillway
Max Velocity through Grate 1 (fps) =	N/A	N/A	N/A	N/A	N/A	0.8	1.4	1.6	1.7
Max Velocity through Grate 2 (fps) =	N/A	N/A	N/A	N/A	N/A	N/A	N/A	N/A	N/A
Time to Drain 97% of Inflow Volume (hours) =	37	46	39	47	73	77	73	67	60
Time to Drain 99% of Inflow Volume (hours) =	40	49	41	51	80	89	86	82	78
Maximum Ponding Depth (ft) =	3.99	5.06	4.19	5.22	7.88	9.66	9.99	10.86	11.59
Area at Maximum Ponding Depth (acres) =	0.22	0.30	0.24	0.31	0.57	0.84	0.89	1.04	1.17
Maximum Volume Stored (acre-ft) =	0.430	0.712	0.475	0.758	1.913	3.166	3.452	4.305	5.114

Detention Basin Outlet Structure Design

UD-Detention, Version 3.07 (February 2017)

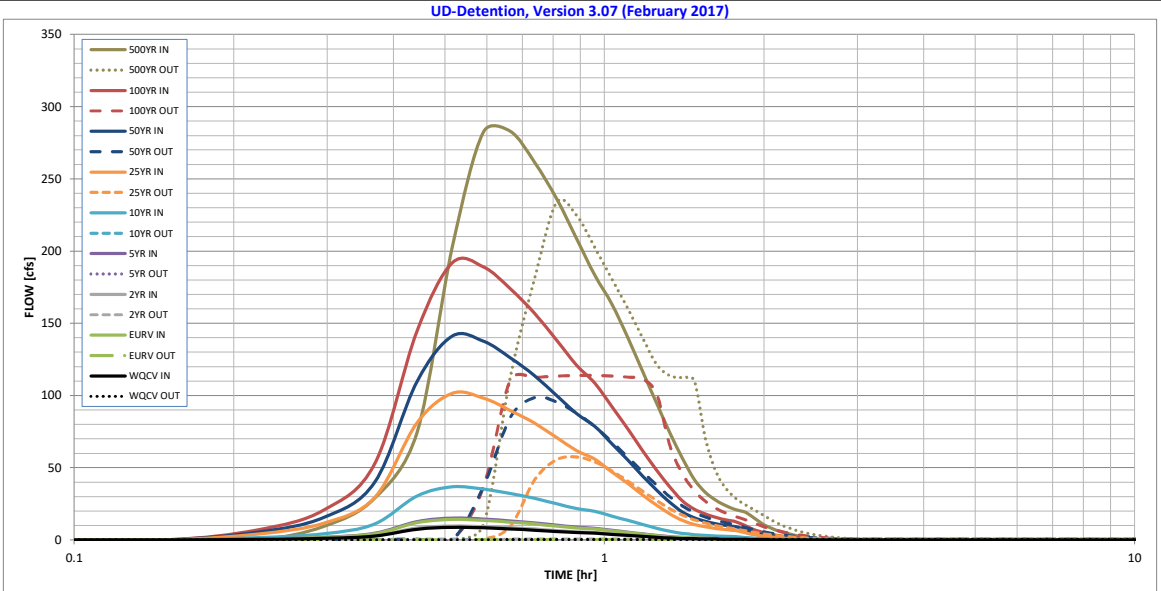

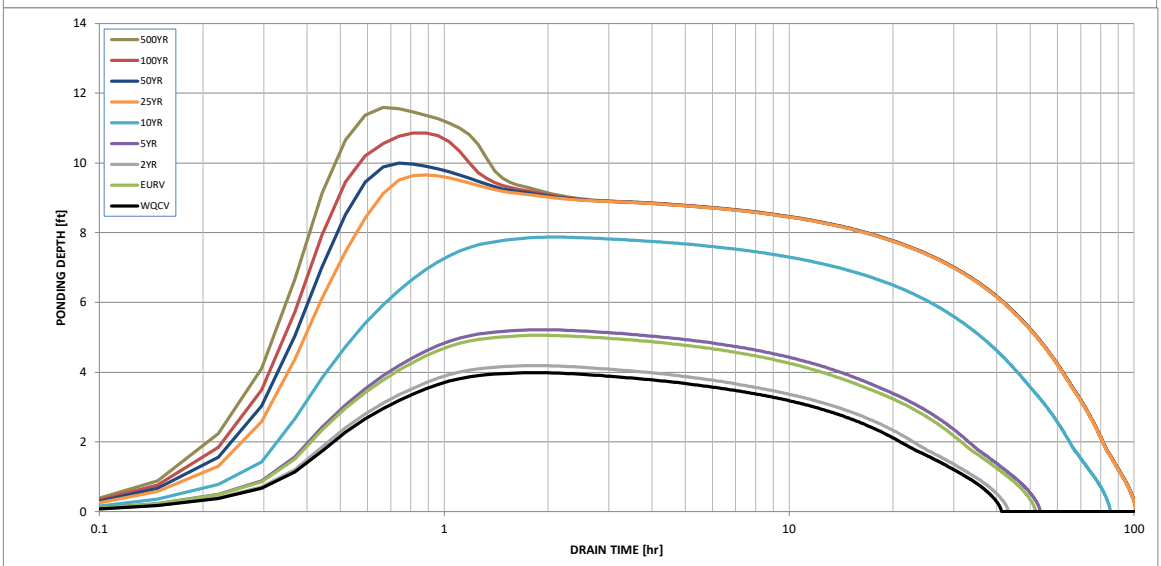

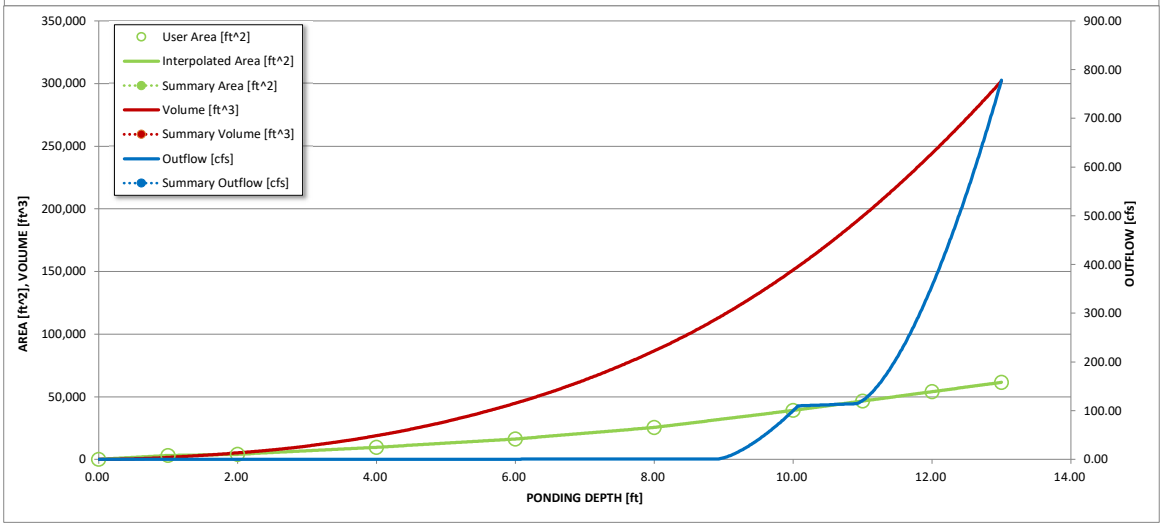

S-A-V-D Chart Axis Override	X-axis	Left Y-Axis	Right Y-Axis
minimum bound			
maximum bound			

Detention Basin Outlet Structure Design

Outflow Hydrograph Workbook Filename:

Storm Inflow Hydrographs **UD-Detention, Version 3.07 (February 2017)**

The user can override the calculated inflow hydrographs from this workbook with inflow hydrographs developed in a separate program.

	SOURCE	WORKBOOK	WORKBOOK	WORKBOOK	WORKBOOK	WORKBOOK	WORKBOOK	WORKBOOK	WORKBOOK	WORKBOOK
Time Interval	TIME	WQCV [cfs]	EURV [cfs]	2 Year [cfs]	5 Year [cfs]	10 Year [cfs]	25 Year [cfs]	50 Year [cfs]	100 Year [cfs]	500 Year [cfs]
4.43 min	0:00:00	0.00	0.00	0.00	0.00	0.00	0.00	0.00	0.00	0.00
	0:04:26	0.00	0.00	0.00	0.00	0.00	0.00	0.00	0.00	0.00
Hydrograph	0:08:52	0.00	0.00	0.00	0.00	0.00	0.00	0.00	0.00	0.00
Constant	0:13:17	0.39	0.63	0.43	0.67	1.58	4.09	5.42	6.95	9.29
1.128	0:17:43	1.05	1.69	1.16	1.80	4.32	11.53	15.63	20.63	28.95
	0:22:09	2.70	4.34	2.97	4.62	11.09	29.59	40.13	53.00	74.51
	0:26:35	7.41	11.93	8.16	12.70	30.45	81.08	109.81	144.78	203.02
	0:31:01	8.76	14.19	9.66	15.12	36.78	101.53	141.11	191.89	282.29
	0:35:26	8.35	13.55	9.21	14.44	35.22	98.20	137.65	189.14	282.97
	0:39:52	7.60	12.33	8.38	13.15	32.06	89.65	126.07	173.86	261.57
	0:44:18	6.78	11.02	7.48	11.76	28.79	80.81	113.72	156.93	236.27
	0:48:44	5.84	9.53	6.45	10.16	25.03	70.84	99.95	138.27	208.85
	0:53:10	5.09	8.30	5.62	8.85	21.75	61.93	87.47	121.11	183.07
	0:57:35	4.61	7.52	5.09	8.02	19.72	55.77	78.55	108.42	163.17
	1:02:01	3.79	6.21	4.19	6.63	16.44	46.91	66.40	92.15	139.75
	1:06:27	3.09	5.08	3.42	5.43	13.56	38.93	55.19	76.69	116.50
	1:10:53	2.37	3.92	2.62	4.20	10.63	30.99	44.16	61.68	94.32
	1:15:19	1.75	2.93	1.95	3.14	8.10	24.04	34.40	48.20	74.04
	1:19:44	1.27	2.12	1.41	2.27	5.96	18.05	25.97	36.55	56.57
	1:24:10	0.99	1.64	1.10	1.75	4.52	13.47	19.27	26.98	41.92
	1:28:36	0.82	1.35	0.90	1.44	3.68	10.78	15.34	21.37	32.84
	1:33:02	0.69	1.14	0.77	1.22	3.11	9.06	12.87	17.89	27.33
	1:37:28	0.61	1.00	0.67	1.07	2.71	7.87	11.15	15.46	23.52
	1:41:53	0.55	0.90	0.61	0.96	2.43	7.03	9.94	13.76	20.88
	1:46:19	0.51	0.83	0.56	0.89	2.23	6.43	9.08	12.55	18.99
	1:50:45	0.37	0.61	0.41	0.65	1.65	4.83	6.91	9.68	14.95
	1:55:11	0.27	0.45	0.30	0.48	1.20	3.49	4.98	6.97	10.78
	1:59:37	0.20	0.33	0.22	0.35	0.88	2.58	3.69	5.18	7.98
	2:04:02	0.15	0.24	0.16	0.26	0.66	1.92	2.75	3.84	5.92
	2:08:28	0.10	0.17	0.12	0.19	0.48	1.41	2.02	2.84	4.39
	2:12:54	0.07	0.12	0.08	0.13	0.34	1.02	1.46	2.06	3.19
	2:17:20	0.05	0.09	0.06	0.09	0.25	0.74	1.06	1.49	2.30
	2:21:46	0.03	0.06	0.04	0.06	0.17	0.52	0.75	1.06	1.66
	2:26:11	0.02	0.03	0.02	0.04	0.11	0.34	0.49	0.71	1.12
	2:30:37	0.01	0.02	0.01	0.02	0.06	0.20	0.29	0.42	0.68
	2:35:03	0.00	0.01	0.00	0.01	0.02	0.09	0.14	0.21	0.35
	2:39:29	0.00	0.00	0.00	0.00	0.00	0.03	0.04	0.07	0.13
	2:43:55	0.00	0.00	0.00	0.00	0.00	0.00	0.00	0.00	0.01
	2:48:20	0.00	0.00	0.00	0.00	0.00	0.00	0.00	0.00	0.00
	2:52:46	0.00	0.00	0.00	0.00	0.00	0.00	0.00	0.00	0.00
	2:57:12	0.00	0.00	0.00	0.00	0.00	0.00	0.00	0.00	0.00
	3:01:38	0.00	0.00	0.00	0.00	0.00	0.00	0.00	0.00	0.00
	3:06:04	0.00	0.00	0.00	0.00	0.00	0.00	0.00	0.00	0.00
	3:10:29	0.00	0.00	0.00	0.00	0.00	0.00	0.00	0.00	0.00
	3:14:55	0.00	0.00	0.00	0.00	0.00	0.00	0.00	0.00	0.00
	3:19:21	0.00	0.00	0.00	0.00	0.00	0.00	0.00	0.00	0.00
	3:23:47	0.00	0.00	0.00	0.00	0.00	0.00	0.00	0.00	0.00
	3:28:13	0.00	0.00	0.00	0.00	0.00	0.00	0.00	0.00	0.00
	3:32:38	0.00	0.00	0.00	0.00	0.00	0.00	0.00	0.00	0.00
	3:37:04	0.00	0.00	0.00	0.00	0.00	0.00	0.00	0.00	0.00
	3:41:30	0.00	0.00	0.00	0.00	0.00	0.00	0.00	0.00	0.00
	3:45:56	0.00	0.00	0.00	0.00	0.00	0.00	0.00	0.00	0.00
	3:50:22	0.00	0.00	0.00	0.00	0.00	0.00	0.00	0.00	0.00
	3:54:47	0.00	0.00	0.00	0.00	0.00	0.00	0.00	0.00	0.00
	3:59:13	0.00	0.00	0.00	0.00	0.00	0.00	0.00	0.00	0.00
	4:03:39	0.00	0.00	0.00	0.00	0.00	0.00	0.00	0.00	0.00
	4:08:05	0.00	0.00	0.00	0.00	0.00	0.00	0.00	0.00	0.00
	4:12:31	0.00	0.00	0.00	0.00	0.00	0.00	0.00	0.00	0.00
	4:16:56	0.00	0.00	0.00	0.00	0.00	0.00	0.00	0.00	0.00
	4:21:22	0.00	0.00	0.00	0.00	0.00	0.00	0.00	0.00	0.00
	4:25:48	0.00	0.00	0.00	0.00	0.00	0.00	0.00	0.00	0.00
	4:30:14	0.00	0.00	0.00	0.00	0.00	0.00	0.00	0.00	0.00
	4:34:40	0.00	0.00	0.00	0.00	0.00	0.00	0.00	0.00	0.00
	4:39:05	0.00	0.00	0.00	0.00	0.00	0.00	0.00	0.00	0.00
	4:43:31	0.00	0.00	0.00	0.00	0.00	0.00	0.00	0.00	0.00
	4:47:57	0.00	0.00	0.00	0.00	0.00	0.00	0.00	0.00	0.00
	4:52:23	0.00	0.00	0.00	0.00	0.00	0.00	0.00	0.00	0.00
	4:56:49	0.00	0.00	0.00	0.00	0.00	0.00	0.00	0.00	0.00
	5:01:14	0.00	0.00	0.00	0.00	0.00	0.00	0.00	0.00	0.00
	5:05:40	0.00	0.00	0.00	0.00	0.00	0.00	0.00	0.00	0.00
	5:10:06	0.00	0.00	0.00	0.00	0.00	0.00	0.00	0.00	0.00
	5:14:32	0.00	0.00	0.00	0.00	0.00	0.00	0.00	0.00	0.00
	5:18:58	0.00	0.00	0.00	0.00	0.00	0.00	0.00	0.00	0.00

APPENDIX D

DRAINAGE COST ESTIMATE

ABERT RANCH
DRAINAGE IMPROVEMENTS COST ESTIMATE

Item No.	Description	Quantity	Unit	Unit Cost ($$$)	Total Cost ($$$)
	PUBLIC DRAINAGE IMPROVEMENTS (NON-REIMBURSABLE)				
506	Riprap Culvert Aprons	65	TN	$80	$5,200
603	18" RCP Culvert	48	LF	$65	$3,120
603	30" RCP Culvert	56	LF	$97	$5,432
603	42" RCP Culvert	70	LF	$160	$11,200
603	18" RCP FES	2	EA	$390	$780
603	30" RCP FES	2	EA	$582	$1,164
603	42" RCP FES	2	EA	$960	$1,920
	SUBTOTAL				**$28,816**
	Contingency @ 15%				$4,322
	TOTAL				**$33,138**
	PRIVATE DRAINAGE IMPROVEMENTS				
506	Riprap Aprons	66	TN	$98	$6,468
603	42" HDPE Pond Discharge Pipe	94	LF	$160	$15,040
603	42" FES	1	EA	$960	$960
604	Detention Pond Outlet Structure	1	LS	$8,000	$8,000
604	Detention Pond Spillway	1	LS	$6,000	$6,000
	SUBTOTAL				**$36,468**
	Contingency @ 15%				$5,470
	TOTAL				**$41,938**
	TOTAL DRAINAGE IMPROVEMENTS				**$75,077**

APPENDIX E

FIGURES

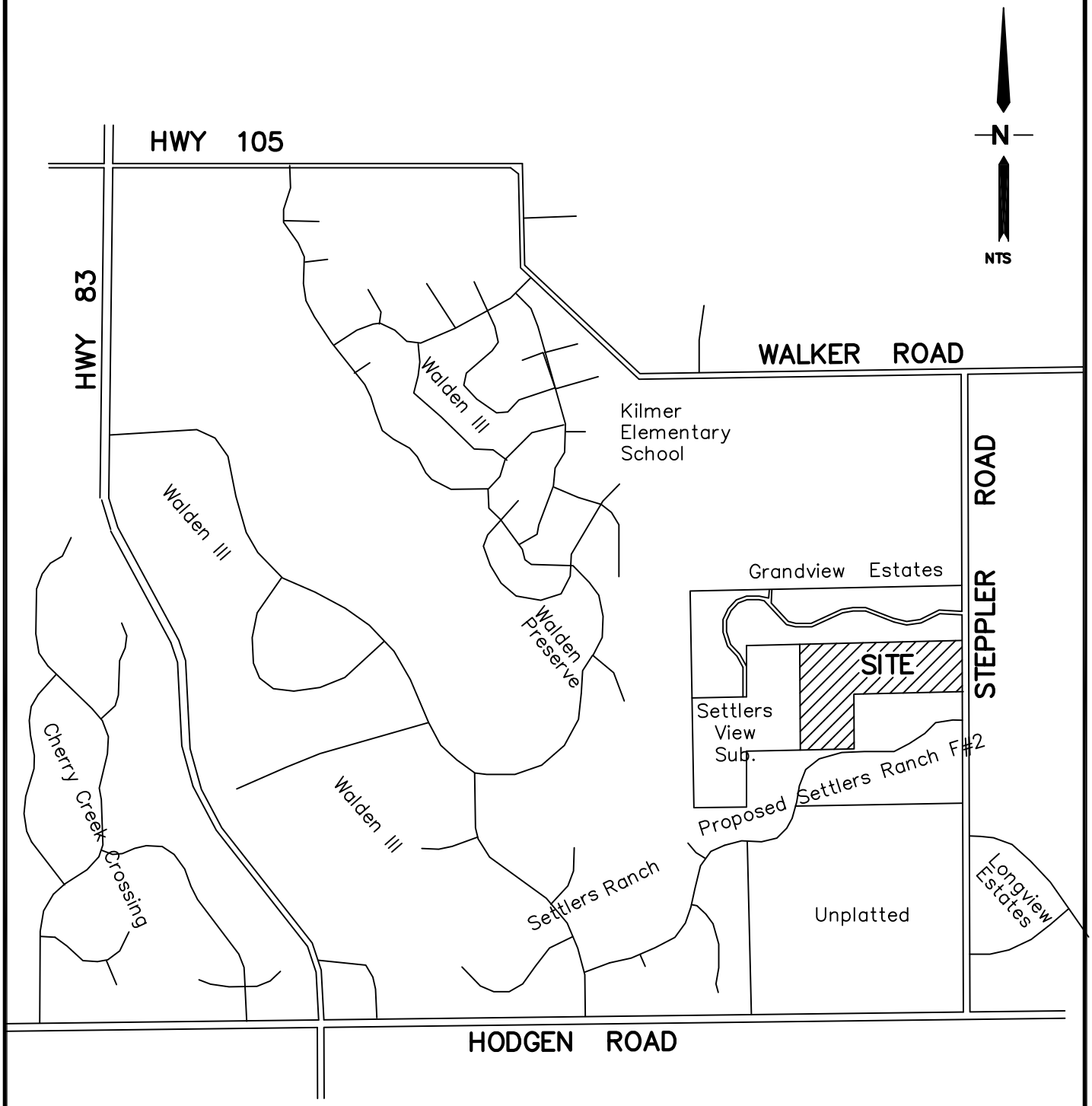

VICINITY MAP

JPS ENGINEERING

ABERT RANCH

FIGURE A1

JPS PROJ NO. 111604

National Flood Hazard Layer FIRMette

FEMA

39°5'10.10"N

104°44'31.77"W

104°43'54.31"W

39°4'42.18"N

Feet

0 250 500 1,000 1,500 2,000

1:6,000

Legend

SEE FIS REPORT FOR DETAILED LEGEND AND INDEX MAP FOR FIRM PANEL LAYOUT

SPECIAL FLOOD HAZARD AREAS
- Without Base Flood Elevation (BFE) *Zone A, V, A99*
- With BFE or Depth *Zone AE, AO, AH, VE, AR*
- Regulatory Floodway

OTHER AREAS OF FLOOD HAZARD
- 0.2% Annual Chance Flood Hazard, Areas of 1% annual chance flood with average depth less than one foot or with drainage areas of less than one square mile *Zone X*
- Future Conditions 1% Annual Chance Flood Hazard *Zone X*
- Area with Reduced Flood Risk due to Levee. See Notes. *Zone X*
- Area with Flood Risk due to Levee *Zone D*

OTHER AREAS
- NO SCREEN Area of Minimal Flood Hazard *Zone X*
- Effective LOMRs
- Area of Undetermined Flood Hazard *Zone D*

GENERAL STRUCTURES
- Channel, Culvert, or Storm Sewer
- Levee, Dike, or Floodwall

OTHER FEATURES
- 20.2 / 17.5 Cross Sections with 1% Annual Chance / Water Surface Elevation
- Coastal Transect
- Base Flood Elevation Line (BFE)
- Limit of Study
- Jurisdiction Boundary
- Coastal Transect Baseline
- Profile Baseline
- Hydrographic Feature

MAP PANELS
- Digital Data Available
- No Digital Data Available
- Unmapped

N

The pin displayed on the map is an approximate point selected by the user and does not represent an authoritative property location.

This map complies with FEMA's standards for the use of digital flood maps if it is not void as described below. The basemap shown complies with FEMA's basemap accuracy standards

The flood hazard information is derived directly from the authoritative NFHL web services provided by FEMA. This map was exported on 4/5/2019 at 3:17:29 PM and does not reflect changes or amendments subsequent to this date and time. The NFHL and effective information may change or become superseded by new data over time.

This map image is void if the one or more of the following map elements do not appear: basemap imagery, flood zone labels, legend, scale bar, map creation date, community identifiers, FIRM panel number, and FIRM effective date. Map images for unmapped and unmodernized areas cannot be used for regulatory purposes.

SUMMARY HYDROLOGY TABLE

DESIGN POINT	Q_5 (CFS)	Q_{100} (CFS)
A1	3.0	21.6
S	10.0	73.1
I	16.3	119.9

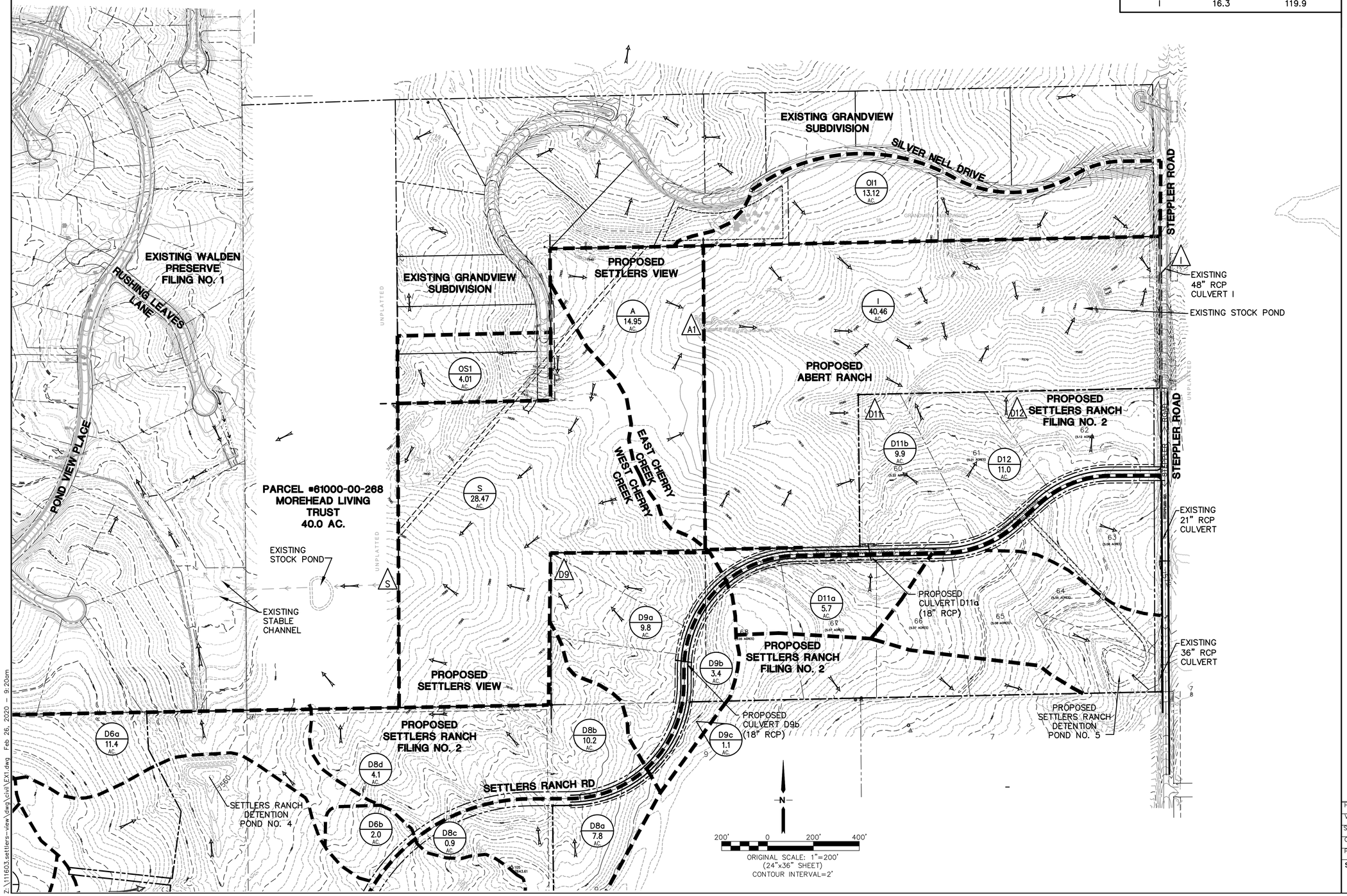

Z:\111603.settlers-view\dwg\civil\EX1.dwg Feb 26, 2020 - 9:20am

JPS ENGINEERING
19 E. Willamette Ave.
Colorado Springs, CO 80903
PH: 719-477-9429
FAX: 719-471-0766
www.jpsengr.com

CALL UTILITY NOTIFICATION CENTER OF COLORADO
1-800-922-1987
CALL 2-BUSINESS DAYS IN ADVANCE BEFORE YOU DIG, GRADE, OR EXCAVATE FOR THE MARKING OF UNDERGROUND MEMBER UTILITIES.

No.	REVISION	BY	DATE

SETTLERS VIEW & ABERT RANCH

HISTORIC DRAINAGE PLAN

HORZ. SCALE: 1"=200'	DRAWN: BJJ
VERT. SCALE: N/A	DESIGNED: JPS
SURVEYED: HANNIGAN	CHECKED: JPS
CREATED: 2/14/17	LAST MODIFIED: 2/25/20
PROJECT NO: 111603	MODIFIED BY: BJJ

SHEET: EX1

SUMMARY HYDROLOGY TABLE

DESIGN POINT	Q5 (CFS)	Q100 (CFS)
A1	7.6	31.2
D11	6.0	28.8
D12	4.6	21.9
S1	2.3	9.3
S2	12.7	52.5
S3	19.0	78.1
S4	2.8	13.7
S	22.0	90.6
E	2.5	10.2
F	5.9	24.5
H	14.6	64.4
I (DEVELOPED)	32.8	147.9
1 (DETAINED)	0.4	113.9

EXISTING WALDEN PRESERVE FILING NO. 1

RUSHING LEAVES LANE

POND VIEW PLACE

EXISTING CHANNEL

PARCEL #61000-00-268
MOREHEAD LIVING TRUST
40.0 AC.

EXISTING GRANDVIEW SUBDIVISION

SILVER NELL DRIVE

EXISTING STOCK POND; UPGRADE TO DETENTION POND I (VOL=3.3 AF)

EXISTING GRANDVIEW SUBDIVISION

PROPOSED SETTLERS VIEW

PROPOSED CHANNEL A

PROPOSED CULVERT H

CHANNEL I

EXISTING 48" RCP CULVERT I

PROPOSED ABERT RANCH

PROPOSED CULVERT F

PROPOSED CULVERT S1

PROPOSED CULVERT E

CHANNEL H

PROPOSED SETTLERS RANCH FILING NO. 2

STEPPLER ROAD

PROPOSED DETENTION POND S3

DITCH S3

CHANNEL S2

EXISTING STOCK POND

EXISTING STABLE CHANNEL

CHANNEL S3.1

PROPOSED CULVERT S2

PROPOSED CULVERT D11a (18" RCP)

EXISTING 21" RCP CULVERT

NOTE: THIS SEGMENT OF SETTLERS RANCH ROAD TO BE GRADED BY ABERT RANCH FOR SECONDARY ACCESS

EXISTING 36" RCP CULVERT

PROPOSED SETTLERS VIEW

PROPOSED SETTLERS RANCH FILING NO. 2

PROPOSED CULVERT D9b (18" RCP)

FUTURE SETTLERS RANCH DETENTION POND NO. 5

SETTLERS RANCH RD

SETTLERS RANCH DETENTION POND NO. 4

DETENTION POND SUMMARY TABLE
(PER "UD-DETENTION")

POND	PRE-DEVELOPMENT PEAK FLOW (Q_{100}-CFS)	PEAK INFLOW (Q_{100}-CFS)	PEAK OUTFLOW (Q_{100}-CFS)
S3	45.4	68.2	39.0
I	134.7	191.9	113.9

200' 0 200' 400' N

ORIGINAL SCALE: 1"=200'
(24"x36" SHEET)
CONTOUR INTERVAL=2'

Z:\111603.settlers-view\dwg\civil\D1.dwg Feb 26, 2020 - 9:25am

SETTLERS VIEW & ABERT RANCH

DEVELOPED DRAINAGE PLAN

JPS ENGINEERING
19 E. Willamette Ave.
Colorado Springs, CO
80903
PH: 719-477-9429
FAX: 719-471-0766
www.jpsengr.com

CALL UTILITY NOTIFICATION CENTER OF COLORADO
1-800-922-1987
CALL 2-BUSINESS DAYS IN ADVANCE BEFORE YOU DIG, GRADE, OR EXCAVATE FOR THE MARKING OF UNDERGROUND MEMBER UTILITIES.

No.	REVISION	BY	DATE

HORZ. SCALE: 1"=200'	DRAWN: BJJ
VERT. SCALE: N/A	DESIGNED: JPS
SURVEYED: HANNIGAN	CHECKED: JPS
CREATED: 12/26/16	LAST MODIFIED: 2/25/20
PROJECT NO: 111603	MODIFIED BY: BJJ

SHEET: D1

SUMMARY HYDROLOGY TABLE

DESIGN POINT	Q5 (CFS)	Q100 (CFS)
F	5.9	24.5
H	14.6	64.4
I (DEVELOPED)	32.8	147.9
I (DETAINED)	0.4	113.9

DATUM IS NAVD '88. BENCHMARK IS THE MONUMENT AT THE SOUTHWEST PROPERTY CORNER, HAVING AN ELEVATION OF 7650.0

ORIGINAL SCALE: 1"=100' (24"x36" SHEET)
CONTOUR INTERVAL=2'

JPS ENGINEERING
19 E. Willamette Ave.
Colorado Springs, CO 80903
PH: 719-477-9429
FAX: 719-471-0766
www.jpsengr.com

CALL UTILITY NOTIFICATION CENTER OF COLORADO
1-800-922-1987
CALL 2 BUSINESS DAYS IN ADVANCE BEFORE YOU DIG, GRADE, OR EXCAVATE FOR THE MARKING OF UNDERGROUND MEMBER UTILITIES.

No.	REVISION	BY	DATE

ABERT RANCH

DEVELOPED DRAINAGE PLAN

HORZ. SCALE: 1"=100'	DRAWN: BJJ
VERT. SCALE: N/A	DESIGNED: JPS
SURVEYED: HANNIGAN	CHECKED: JPS
CREATED: 12/27/16	LAST MODIFIED: 4/15/20
PROJECT NO: 111604	MODIFIED BY: MSP

SHEET: D1.1

C:\Civil3D 2018 projects\111604 abert-ranch \dwg\Drainage\D1.1.dwg Apr 15, 2020 - 1:02pm