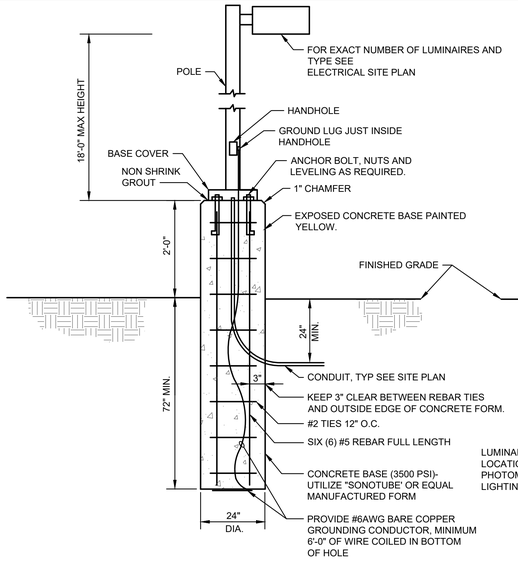

1 LIGHT POLE DETAIL - P2, P4, P5, P6, P7

NOT TO SCALE

LUMINAIRE APPROXIMATE LOCATIONS AS SHOWN ON THE PHOTOMETRIC PLAN FOR OPTIMUM LIGHTING LAYOUT.

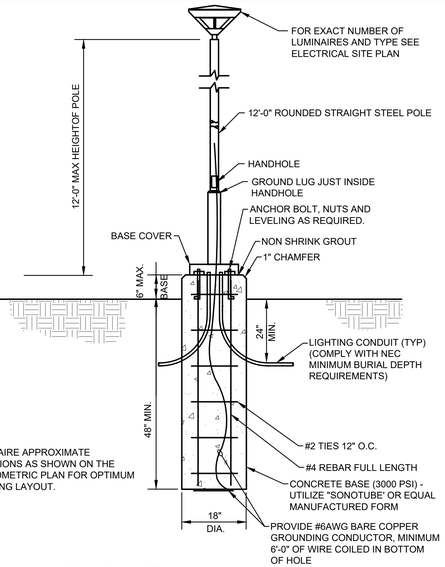

2 LIGHT POLE DETAIL - T1

NOT TO SCALE

SITE LIGHTING FIXTURE SCHEDULE

LUMINAIRE								LAMPS				
ID	MANUFACTURER	CATALOG NUMBER	DESCRIPTION	DISTRIBUTION	VOLTAGE	DIMMING	MOUNTING	QTY.	TYPE	WATTS	LUMENS	COLOR TEMP/CRI
P2	LITHONIA LIGHTING	DSX1 LED-P2-30K-70CRI-T2M-MVOLT-RPA-NLTAIR2 PIRHN-DBLXD POLE: RSS-16-4B-DM19AS-DBXLD	32.7"L/X14.26"W/X2.73"H OUTDOOR LED AREA FIXTURE TYPE 2 MEDIUM DISTRIBUTION, 0-10V DRIVER, ZERO UPLIGHT, -40 DEG. C MINIMUM, NLTAIR MOTION AND PHOTOCELL WIRELESS CONTROLS, IP66 RATED AND WET LOCATIONS LISTED, 5 YEAR WARRANTY.	TYPE 2 MEDIUM	120-277V	0-10V	POLE 16'-0"	25	LED	68	9,260	3000K/70CRI
P4	LITHONIA LIGHTING	DSX1 LED-P2-30K-70CRI-T4M-MVOLT-RPA-NLTAIR2 PIRHN-DBLXD POLE: RSS-16-4B-DM19AS-DBXLD	SAME AS TYPE P1 BUT TYPE 4 MEDIUM DISTRIBUTION.	TYPE 4 MEDIUM	120-277V	0-10V	POLE 16'-0"	11	LED	68	9,507	3000K/70CRI
P5	LITHONIA LIGHTING	DSX1 LED-P2-30K-70CRI-T5W-MVOLT-RPA-NLTAIR2 PIRHN-DBLXD POLE: RSS-16-4B-DM19AS-DBXLD	SAME AS TYPE P1 BUT TYPE 5 WIDE DISTRIBUTION.	TYPE 5 WIDE	120-277V	0-10V	POLE 16'-0"	1	LED	68	9,940	3000K/70CRI
P6	LITHONIA LIGHTING	DSX1 LED-P2-30K-70CRI-T5W-MVOLT-RPA-NLTAIR2 PIRHN-DBLXD POLE: RSS-16-4B-DM28AS-DBXLD	SAME AS TYPE P5 BUT DOUBLE HEADED POLE.	TYPE 5 WIDE	120-277V	0-10V	POLE 16'-0"	16	LED	136	19,880	3000K/70CRI
P7	LITHONIA LIGHTING	DSX1 LED-P2-30K-70CRI-TFTM-MVOLT-RPA-NLTAIR2 PIRHN-DBLXD POLE: RSS-16-4B-DM19AS-DBXLD	SAME AS TYPE P1 BUT FORWARD THROW MEDIUM DISTRIBUTION.	TYPE 4 FORWARD THROW	120-277V	0-10V	POLE 16'-0"	4	LED	136	9,573	3000K/70CRI
T1	LITHONIA LIGHTING	RADPT LED-P14-30K-PATH-MVOLT-RADPT20-NLTAIR2-DBLXD POLE: RSS-16-4B-T20-DBLXD	24" DIAMETER DECORATIVE LED POST TOP FIXTURE HIGH-EFFICACY LEDs ON A FLEXIBLE LED BOARD, 0-10V DIMMING, NLTAIR2 CONTROL, -40 DEG. C MINIMUM, IP65 RATED, 5 YEAR WARRANTY.	TYPE 3 PATHWAY	120-277V	0-10V	POLE 12'-0"	24	LED	86	9,070	3000K/70CRI
W1	LITHONIA LIGHTING	RAD1 LED-P3-30K-ASY-MVOLT-WBA-NLTAIR2-DBLXD	24" DIAMETER DECORATIVE LED WALL MOUNT FIXTURE HIGH-EFFICACY LEDs ON A FLEXIBLE LED BOARD, 0-10V DIMMING, NLTAIR2 CONTROL, -40 DEG. C MINIMUM, IP65 RATED, 5 YEAR WARRANTY.	TYPE 4 ASYMMETRIC	120-277V	0-10V	WALL 12'-0"	33	LED	54	7,005	3000K/70CRI
W2	LUMINIS LIGHTING	BVA11W-L1L16-TYP4-K30-120V-BKT-PH	10.5"L/X6"W/X4.5"H LED WALL MOUNT FIXTURE, 0-10V DRIVER, ACRYLIC OPTICS, CLEAR TEMPERED GLASS, INTEGRAL PHOTOCELL, -40 DEG. C MINIMUM, IP65 RATED WET LOCATIONS RATED, 5 YEAR WARRANTY.	TYPE 4	120V	0-10V	WALL 9'-0"	362	LED	19	1,384	3000K/80CRI

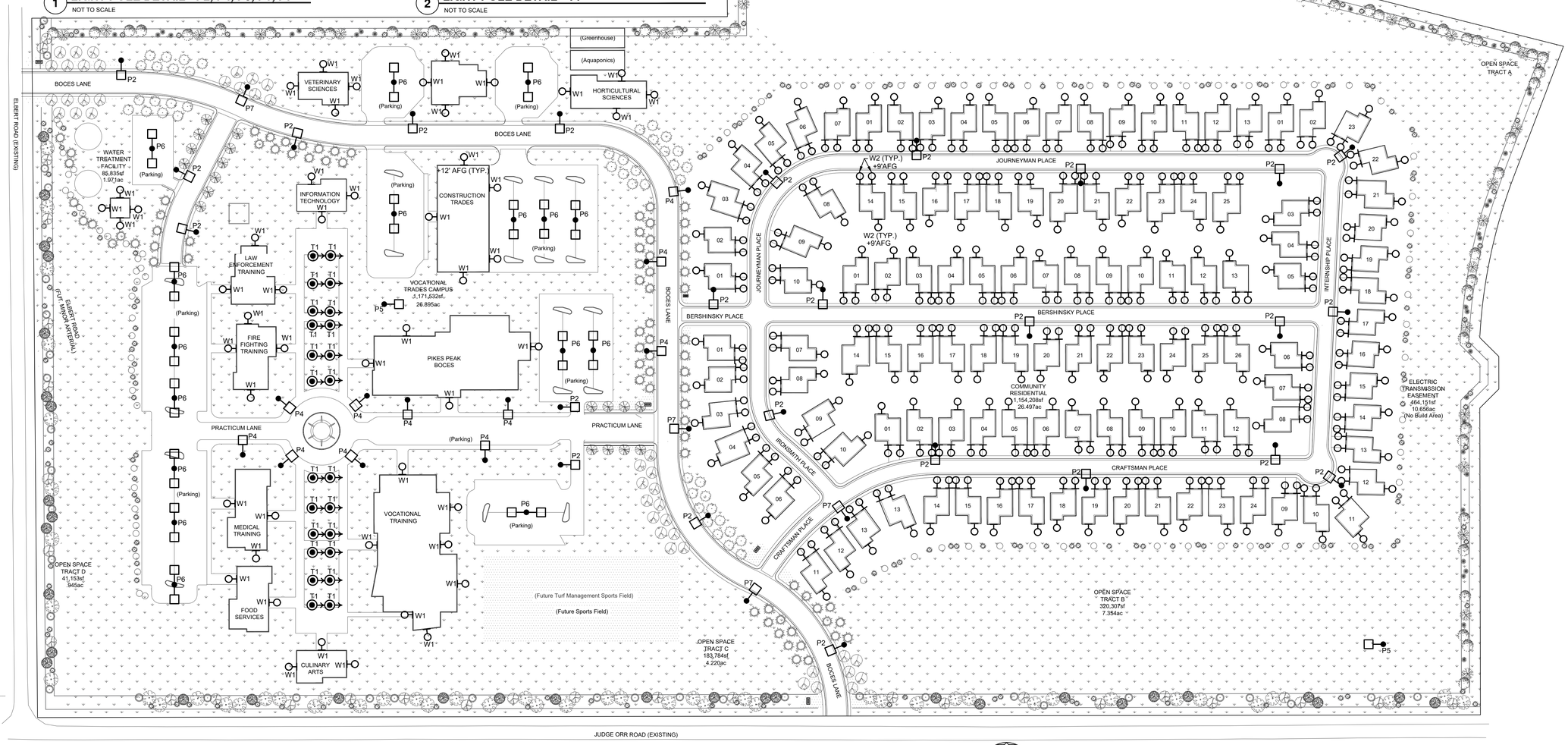

ELECTRICAL SITE DEVELOPMENT PLAN

SCALE: 1" = 100'-0"

PIKES PEAK BOCES

William Garnas & Associates, Ltd.

PLANT ENGINEERING CONSULTANTS
301 WEST FILLMORE STREET COLORADO SPRINGS CO 80907
719 473 7077 www.plantecc.com
PLANT PROJECT #: 24009

©2024 THIS DRAWING IS AN INSTRUMENT OF SERVICE AND AS SUCH REMAINS THE EXCLUSIVE PROPERTY OF THE PIKES PEAK BOARD OF COOPERATIVE EDUCATIONAL SERVICES. THIS DRAWING MAY NOT BE REPRODUCED OR PREPARED IS EXECUTED OR NOT. REPRODUCTION OR UNAUTHORIZED USE OF THIS DRAWING WITHOUT PRIOR CONSENT FROM BOCES IS PROHIBITED.

THIS DRAWING IS DIMENSIONAL. THE DIMENSIONS ARE ACCURATE. ALL DIMENSIONS TO BE VERIFIED BEFORE ORDERING OR CONSTRUCTION. FIELD DIMENSIONS SHALL PREVAIL OVER ANY SCHEDULED, STATED, OR IMPLIED QUANTITIES. FIELD CHANGES MADE WITHOUT PRIOR APPROVAL BY REVIEWING AGENCIES OF THE RECORD DRAWING WILL RESULT IN DELAY OF FINAL ACCEPTANCE AND/OR REJECTION OF THE WORK AS INCORRECT OR INCOMPLETE.

ONLY DRAWINGS BEARING THE OFFICIAL STAMP OF THE LICENSED PROFESSIONAL IN THE STATE OF COLORADO ARE VALID FOR CONSTRUCTION PURPOSES.

PLAN NORTH

PROJECT NAME: Pikes Peak BOCES
Board of Cooperative Educational Services
PROJECT ADDRESS: Judge Orr Road
Peyton, CO 80000
PROJECT DESCRIPTION: Proposed Development Plan

DATE: 07/16/2024
DESIGNED: CAO
CHECKED: MPP

COLORADO LICENSED MITCHELL P. PLANT 31074 7/16/2024 PROFESSIONAL ENGINEER

REVISIONS:		
DATE:	BY:	DESCRIPTION:

NOTES:

PLAN SCALE: AS NOTED ON PLAN

SHEET TITLE: ELECTRICAL SITE DEVELOPMENT PLAN

SHEET NO. DP1

1 OF 3 SHEETS

FILE NO. 24009_DP1.DWG

7/16/2024 4:03:57 PM patrick.radwanik
J:\projects\2024\24009 pp boces fleton education park site dp\4 drawing\4.3 autocad\4.3.4 electrical\24009_dp1.dwg

GENERAL NOTES

A. CONTRACTOR SHALL VERIFY ALL UTILITY LOCATIONS PRIOR TO ANY EXCAVATION. NOT ALL EXISTING CONDITIONS ARE SHOWN FOR CLARITY.

B. CONTRACTOR SHALL PROVIDE ALL REQUIRED CUTTING, TRENCHING, BACKFILLING, AND RESTORATION.

C. THESE PHOTOMETRIC CALCULATIONS ARE BASED ON MANUFACTURER'S IES FILES AND 0.95 LIGHT DEPRECIATION FACTOR.

D. ACTUAL ILLUMINANCE LEVELS MAY DIFFER FROM THE FOOT CANDLE LEVELS SHOWN DUE TO VARIABLE FIELD CONDITIONS, SUCH AS NEARBY EXISTING LUMINAIRES, LUMINAIRE DIRT DEPRECIATION, LANDSCAPING, AND FUTURE DEVELOPMENTS.

Calculation Summary

Label	CalcType	Units	Avg	Max	Min	Avg/Min	Max/Min
Educational Area	Illuminance	Fc	0.63	7.9	0.0	N.A.	N.A.
Property Line	Illuminance	Fc	0.00	0.1	0.0	N.A.	N.A.
Residential Area	Illuminance	Fc	0.46	4.4	0.0	N.A.	N.A.

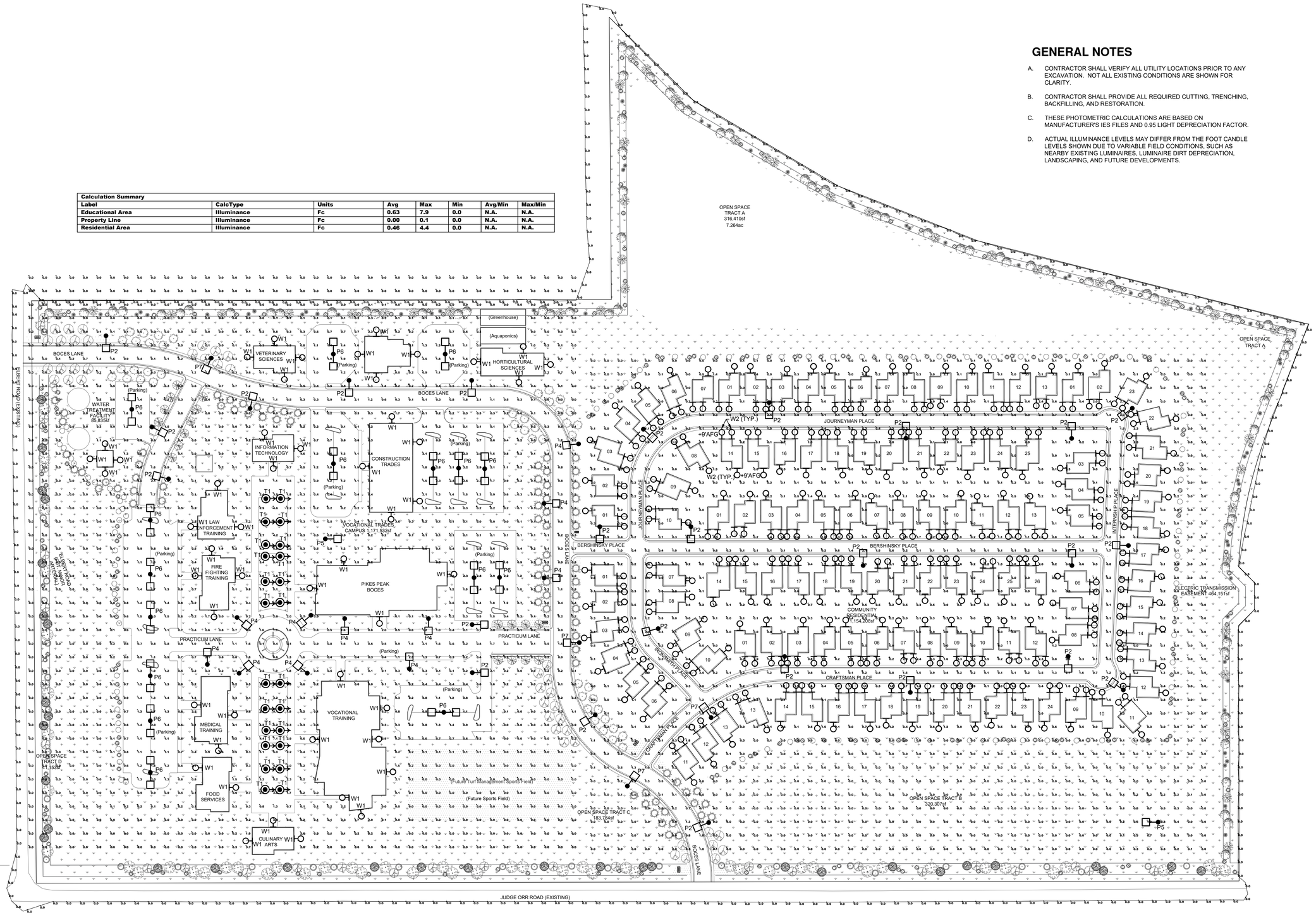

DEVELOPMENTAL SITE PHOTOMETRIC PLAN

SCALE: 1" = 100'-0"

PIKES PEAK BOCES

©2024 THIS DRAWING IS AN INSTRUMENT OF SERVICE AND AS SUCH REMAINS THE EXCLUSIVE PROPERTY OF THE PIKES PEAK BOARD OF COOPERATIVE EDUCATIONAL SERVICES. THIS DRAWING MAY NOT BE REPRODUCED OR PREPARED IS EXECUTED OR NOT. REPRODUCTION OR UNAUTHORIZED USE OF THIS DRAWING WITHOUT PRIOR CONSENT FROM BOCES IS PROHIBITED.

THIS DRAWING IS DIMENSIONAL. THE WRITTEN DIMENSIONS ALL DIMENSIONS SHALL PREVAIL OVER ANY SCHEDULED, STATED, OR IMPLIED QUANTITIES. FIELD CHANGES MADE WITHOUT PRIOR APPROVAL BY REVIEWING AGENCIES OF THE RECORD DRAWING WILL RESULT IN DELAY OF FINAL ACCEPTANCE AND/OR REJECTION OF THE WORK. ONLY DRAWINGS BEARING THE OFFICIAL STAMP OF THE LICENSED PROFESSIONAL IN THE STATE OF COLORADO ARE VALID FOR CONSTRUCTION PURPOSES.

William Ganas & Associates, Ltd.

PLANT ENGINEERING CONSULTANTS
320 WEST FILLMORE STREET COLORADO SPRINGS CO 80907
719 473 7077 www.plantecc.com
PLANT PROJECT # 24009

PLAN NORTH

PROJECT NAME: Pikes Peak BOCES
PROJECT ADDRESS: Board of Cooperative Educational Services
Judge Orr Road
Peyton, CO 80000
PROJECT DESCRIPTION: Proposed Development Plan

DATE: 07/16/2024
DESIGNED: CAO
CHECKED: MPP

COLORADO LICENSED
CHRISTOPHER P. PLANT
51074
7/16/2024
PROFESSIONAL ENGINEER

REVISIONS:		
DATE:	BY:	DESCRIPTION:

NOTES:

PLAN SCALE: AS NOTED ON PLAN

SHEET TITLE: DEVELOPMENTAL SITE PHOTOMETRIC PLAN

SHEET NO. DP2

2 OF 3 SHEETS

FILE NO. 24009_DP2.DWG

7/16/2024, 4:03:57 PM pattrick.hodnemis
J:\Projects\2024\24009 pp Boces Peyton education park site dp\24 drawing\4.3 ent\dwg\4.3.4 electrical\24009_dp2.dwg

D-Series Size 1
LED Area Luminaire

Catalog Number

Notes

Type P2,P4,P5,P6,P7

Hit the Tab key or mouse over the page to see all interactive elements.

Specifications

EPA:	0.69 ft² (0.06 m²)
Length:	32.71" (83.1 cm)
Width:	14.26" (36.2 cm)
Height H1:	7.88" (20.0 cm)
Height H2:	2.73" (6.9 cm)
Weight:	34 lbs (15.4 kg)

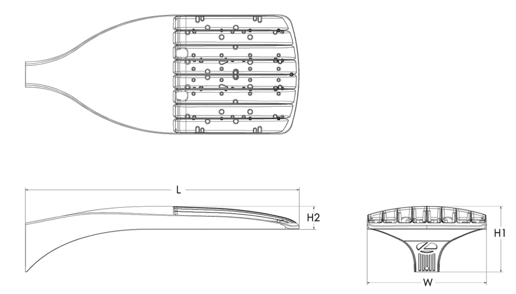

Introduction

The modern styling of the D-Series features a highly refined aesthetic that blends seamlessly with its environment. The D-Series offers the benefits of the latest in LED technology into a high performance, high efficacy, long-life luminaire.

The photometric performance results in sites with excellent uniformity, greater pole spacing and lower power density. D-Series outstanding photometry aids in reducing the number of poles required in area lighting applications with typical energy savings of 65% and expected service life of over 100,000 hours.

Ordering Information

EXAMPLE: DSX1 LED P7 40K 70CRI T3M MVOLT SPA NLTAIR2 PIRHN DDBXD

DSX1 LED

Series	LEDs	Color temperature[2]	Color Rendering Index[2]	Distribution		Voltage	Mounting
DSX1 LED	**Forward optics** P1 P6, P2 P7, P3 P8, P4 P9, P5; **Rotated optics** P10[1] P12[1], P11[1] P13[1]	(this section 70CRI only) 30K 3000K, 40K 4000K, 50K 5000K; (this section 80CRI only, extended lead times apply) 27K 2700K, 30K 3000K, 35K 3500K, 40K 4000K, 50K 5000K	70CRI, 70CRI, 70CRI; 80CRI, 80CRI, 80CRI, 80CRI, 80CRI	AFR Automotive front row; T1S Type I short; T2M Type II medium; T3M Type III medium; T3LG Type III low glare[3]; T4M Type IV medium; T4LG Type IV low glare[3]; TFTM Forward throw medium	T5M Type V medium; T5LG Type V low glare; T5W Type V wide; BLC3 Type III backlight control[3]; BLC4 Type IV backlight control[3]; LCCO Left corner cutoff[3]; RCCO Right corner cutoff[3]	MVOLT (120V-277V)[4]; HVOLT (347V-480V)[5,6]; XVOLT (277V - 480V)[7,8]; 120[16,26]; 208[16,26]; 240[16,26]; 277[16,26]; 347[16,26]; 480[16,26]	**Shipped included** SPA Square pole mounting (#8 drilling); RPA Round pole mounting (#8 drilling); SPA5 Square pole mounting #5 drilling[9]; RPA5 Round pole mounting #5 drilling[9]; SPA8N Square narrow pole mounting #8 drilling; WBA Wall bracket[10]; MA Mast arm adapter (mounts on 2 3/8" OD horizontal tenon)

Control options		Other options	Finish (required)
Shipped installed NLTAIR2 PIRHN nLight AIR gen 2 enabled with bi-level motion / ambient sensor, 8-40' mounting height, ambient sensor enabled at 2fc.[11,12,20,21]; PIR High/low, motion/ambient sensor, 8-40' mounting height, ambient sensor enabled at 2fc[13,20,21]; PER NEMA twist-lock receptacle only (controls ordered separate)[14]; PER5 Five-pin receptacle only (controls ordered separate)[14,21]	PER7 Seven-pin receptacle only (controls ordered separate)[14,21]; FAO Field adjustable output[15,21]; BL30 Bi-level switched dimming, 30%[16,21]; BL50 Bi-level switched dimming, 50%[16,21]; DMG 0-10v dimming wires pulled outside fixture (for use with an external control, ordered separately)[17]; DS Dual switching[18,19,21]	**Shipped installed** SPD20KV 20KV surge protection; HS Houseside shield (black finish standard)[22]; L90 Left rotated optics[1]; R90 Right rotated optics[1]; CCE Coastal Construction[23]; HA 50°C ambient operation[24]; BAA Buy America(n) Act Compliant; SF Single fuse (120, 277, 347V)[26]; DF Double fuse (208, 240, 480V)[26]; **Shipped separately** EGSR External Glare Shield (reversible, field install required, matches housing finish); BSDB Bird Spikes (field install required)	DDBXD Dark Bronze; DBLXD Black; DNAXD Natural Aluminum; DWHXD White; DDBTXD Textured dark bronze; DBLBXD Textured black; DNATXD Textured natural aluminum; DWHGXD Textured white

© 2011-2023 Acuity Brands Lighting, Inc. All rights reserved.

Radean Post Top
LED Area Luminaire

Catalog Number

Notes

Type T1

Hit the Tab key or mouse over the page to see all interactive elements.

Specifications

EPA:	1.02 ft² (0.105 m²)
Length:	24" (61cm)
Width:	24" (61cm)
H1 Luminaire Height:	4" (10.16cm)
H2 Luminaire Height:	26" (66.04cm)
Weight:	38lbs (17.24Kg)

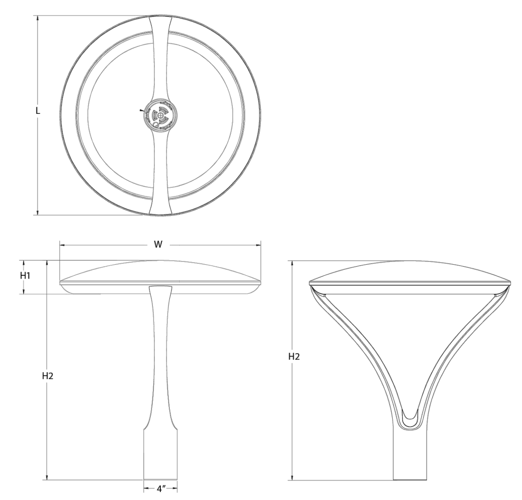

Introduction

The architecturally-inspired shape of the RADEAN™ post top area luminaire embodies the grace and strength of the RADEAN family. The twin copper-core cast aluminum arms support the slender superstructure, creating a beautiful sculpture by day transforming into a beacon of comfort by night. Triangular arms redirect reflection maintaining its visually quiet appearance. With sleek lines and simple silhouettes, these LED luminaires use specialized lighting and visual comfort to transform common areas like courtyards, outdoor retail locations, universities and corporate campuses into pedestrian-friendly nighttime environments.

Ordering Information

EXAMPLE: RADPT LED P3 30K SYM MVOLT PT4 PE DNAXD

RADPT LED

Series	Performance package	Color temperature	Distribution	Voltage	Mounting (required)
RADPT LED	P1 3,000 Lumens; P2 5,000 Lumens; P3 7,000 Lumens; P4 10,000 Lumens; P5 15,000 Lumens	27K 2700K; 30K 3000K; 35K 3500K; 40K 4000K; 50K 5000K	SYM Symmetric type V; ASY Asymmetric type IV; PATH Pathway Type III	MVOLT[2] 277[2]; 120[2] 347; 208[2] 480; 240[2]	PT4[3] Slips inside a 4" OD round metal pole; RADPT20 Slips over a 2 3/8" diameter tenon (4" tall tenon required); RADPT25 Slips over a 2 7/8" diameter tenon (4" tall tenon required)

Control options	Other options	Finish (required)
Shipped installed NLTAIR2 nLight AIR 2.0 enabled[4]; PE Button photocell[4]; FAO Field adjustable output[4]; DMG 0-10v dimming wires pulled outside fixture (for use with an external control, ordered separately)[5]	SF Single Fuse[2]; DF Double Fuse[2]; R90 Rotated optics[6]; **Shipped installed** HS Houseside shield[7]	DDBXD Dark bronze; DBLXD Black; DNAXD Natural aluminum; DWHXD White; DDBTXD Textured dark bronze; DBLBXD Textured black; DNATXD Textured natural aluminum; DWHGXD Textured white

© 2011-2024 Acuity Brands Lighting, Inc. All rights reserved.

Radean Arm Mount
LED Area Luminaire

Catalog Number

Notes

Type W1

Hit the Tab key or mouse over the page to see all interactive elements.

Specifications

EPA:	0.75 ft² (0.05 m²)
Length: L1	24" (61cm)
L2	30" (60.96 cm)
Width:	24" (61cm)
Height:	4" (10.2cm)
Weight (max):	29lbs (13.15Kg)

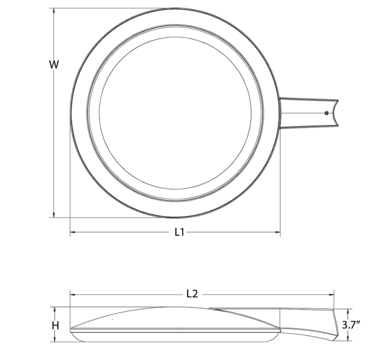

Introduction

The RADEAN arm mount luminaire is the perfect choice for pedestrian applications where daytime aesthetics and visual comfort are needed. Adding architectural flair to any space, the RADEAN's low-profile shape and smooth curves blend in while adding a touch of elegance.

Perfect for campuses, parks, pedestrian malls, courtyards and pathways, the RADEAN arm mount is the Architect's choice to provide beautiful aesthetics both day and night.

Ordering Information

EXAMPLE: RAD1 LED P3 30K SYM MVOLT RPA PE DNAXD

RAD1 LED

Series	Performance package	Color temperature	Distribution	Voltage	Mounting
RAD1 LED	P1 3,000 Lumens; P2 5,000 Lumens; P3 7,000 Lumens; P4 11,000 Lumens; P5 16,000 Lumens	27K 2700K; 30K 3000K; 35K 3500K; 40K 4000K; 50K 5000K	SYM Symmetric type V; ASY Asymmetric type IV; PATH Pathway type III	MVOLT[2] 277[2]; 120[2] 347; 208[2] 480; 240[2]	SPA Square pole mounting (includes adapter); RPA Round pole mounting; WBA Wall bracket

Control options	Other options	Finish (required)
Shipped installed NLTAIR2 nLight AIR 2.0 enabled[3]; PE Button photocell[3]; FAO Field adjustable output[3]; DMG 0-10v dimming wires pulled outside fixture (for use with an external control, ordered separately)	SF Single Fuse[2]; DF Double Fuse[2]; L90 Left rotated optics; R90 Right rotated optics; **Shipped separately** HS Houseside shield[5]	DDBXD Dark bronze; DBLXD Black; DNAXD Natural aluminum; DWHXD White; DDBTXD Textured dark bronze; DBLBXD Textured black; DNATXD Textured natural aluminum; DWHGXD Textured white

Accessories
Ordered and shipped separately.

RADHS	Houseside shield (shield is white)
RADCS	Decorative clamshell base for 4" RSS pole (specify finish)
RADFBC	Full base cover for 4" RSS pole (specify finish)

For more control options, visit DTL and ROAM online.

NOTES
1. 2700K and 3500K may require extended lead-times.
2. MVOLT driver operates on any line voltage from 120-277V (50/60 Hz). Single fuse (SF) requires 120, 277 or 347 voltage option. Double fuse (DF) requires 208, 240 or 480 voltage option.
3. NLTAIR2 not available with PE or FAO. Must link to external nLight Air network. Does not include occupancy sensor. For more information refer to rSBOR pole mount sensor.
4. DMG not available with NLTAIR2 or FAO.
5. Also available as a separate accessory; see Accessories information. Shield is field rotatable in 45° increments.

© 2011-2024 Acuity Brands Lighting, Inc. All rights reserved.

LUMINIS®

BVA11W/BVA12W SERIES
Bellevue
WALL MOUNT

TYPE: W2 QUANTITY: ______ PROJECT: ______

CATALOG NUMBER: MODEL | LED LIGHT SELECTION | CCT | VOLTAGE | FINISH | OPTION | OPTION | OPTION

1- Front cover constructed of corrosion resistant aluminum.
2- 4.5" (114mm) x 6" (152mm) Extruded aluminum optical chamber.
3- Available in configurations of 9 LEDs or 18 LEDs
4- Clear tempered glass.
5- All stainless steel hardware.

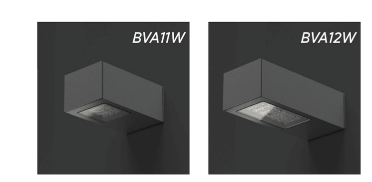

MATERIALS
Bellevue wall mount is made of 6063-T6 extruded aluminum alloy. LED board is assembled on a thick extruded aluminum profile and protected by a clear tempered glass. The acrylic optics provide a wide range of IES type distribution. The driver is mounted inside the fixture for ease of maintenance.

ELECTRICAL
DRIVER Standard driver is 120-277V multi-volt compatibility (50-60Hz), 0-10V dimming-ready (dims to 10%). Optional 347/480V, operating temperatures of -40°C/-40°F to 55°C/131°F, output over voltage protection, output over current protection, output short circuit protection with auto-recovery.

LED Type I, II, III, IV light distribution via high performance optical lenses. Offered in 2700K, 3000K, 3500K, 4000K / 80 CRI.
Optional true amber LED for turtle sensitive areas.
Wavelengths: 584.5nm to 597nm.

LIFETIME
60,000hrs $L_{70}B_{50}$ (based on LM-80 report for lumen maintenance)

FINISH
Polyester powder coating is applied through an electrostatic process, and oven cured for long term finish.

CERTIFICATION
Certified and Approved as per CSA C22.2 No.: 250.0 standard and ANSI/UL 1598 standard, for wet location. Rated IP65. Rated IK10.

Photometric testing performed by an independent laboratory in accordance with IES LM-79-08 standards at 25°C. Lumen depreciation in accordance with IESNA LM80 standards.

MOUNTING
Maximum weight: 11 lbs (5.0 kg)
Bellevue wall mount is designed for ease of access and installation.
The head is secured on a mounting plate by one set screw. The mounting plate is designed to fit on a 4" (102mm) octagonal electrical box. Fixture lighting must point to the ground at all time.

BVA11W

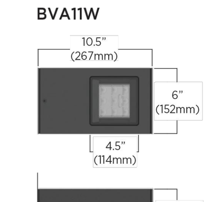

BVA12W

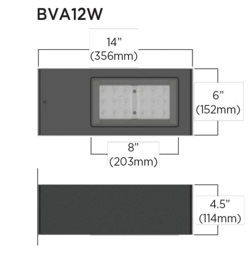

LUMINIS | Toll free: 866.586.4647 Fax: 514.683.8872 Email: info@luminis.com
260 Labrosse, Pointe-Claire (QC) Canada H9R 5L5

Luminaires may be altered for design improvement without prior notice.

PIKES PEAK BOCES

©2024. THIS DRAWING IS AN INSTRUMENT OF SERVICE AND AS SUCH REMAINS THE EXCLUSIVE PROPERTY OF THE PIKES PEAK BOARD OF COOPERATIVE EDUCATIONAL SERVICES (BOCES), WHETHER WORK FOR WHICH IT WAS PREPARED IS EXECUTED OR NOT. REPRODUCTION OR UNAUTHORIZED USE OF THIS DRAWING WITHOUT PRIOR CONSENT FROM BOCES IS PROHIBITED.

THIS DRAWING IS DIAGRAMMATIC. IN THE EVENT OF A CONFLICT, ALL QUANTITIES WHICH CAN BE DETERMINED GRAPHICALLY FROM THE DRAWINGS SHALL PREVAIL OVER ANY SCHEDULED, STATED, OR IMPLIED QUANTITIES. FIELD CHANGES MADE WITHOUT PRIOR APPROVAL BY REVIEWING AGENCIES OF THE RECORD DRAWING WILL RESULT IN DELAY OF FINAL; ACCEPTANCE AND/OR ISSUANCE OF CERTIFICATE OF OCCUPANCY WHERE APPLICABLE.

ONLY DRAWINGS BEARING THE OFFICIAL STAMP OF THE LICENSED PROFESSIONAL IN THE STATE OF COLORADO ARE VALID FOR CONSTRUCTION PURPOSES.

William Gaman & Associates, Ltd.

PLANT ENGINEERING CONSULTANTS
320 WEST FILLMORE STREET COLORADO SPRINGS CO 80907
719 473 7077 www.planteci.com
PLANT PROJECT #: 24009

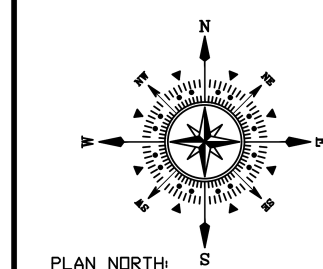

PLAN NORTH:

PROJECT NAME: Pikes Peak BOCES
Board of Cooperative Educational Services

PROJECT ADDRESS: Judge Orr Road
Peyton, CO 80000

PROJECT DESCRIPTION: Proposed Development Plan

DATE:	07/16/2024
DESIGNED:	CAO
CHECKED:	MPP

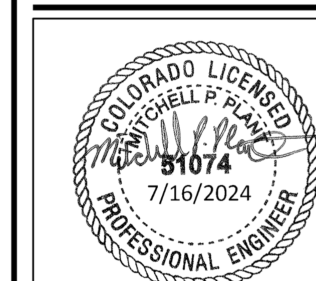

REVISIONS:

DATE:	BY:	DESCRIPTION:

NOTES:

PLAN SCALE: AS NOTED ON PLAN

SHEET TITLE: CUT SHEETS

SHEET NO. DP3
3 OF 3 SHEETS

FILE NO. 24009_DP3.DWG

7/16/2024 4:04:27 PM patrick nadvornik
p:\projects\2024\24009 pp boces falcon education park site dp\4 drawing\4.3 autocad\4.3.4 electrical\24009_dp3.dwg