GRADING NOTES

1. CONSTRUCTION MAY NOT COMMENCE UNTIL A CONSTRUCTION PERMIT IS OBTAINED FROM DEVELOPMENT SERVICES AND A PRE-CONSTRUCTION CONFERENCE IS HELD WITH DEVELOPMENT SERVICES INSPECTIONS.

2. STORMWATER DISCHARGES FROM CONSTRUCTION SITES SHALL NOT CAUSE OR THREATEN TO CAUSE POLLUTION, CONTAMINATION, OR DEGRADATION OF STATE WATERS. ALL WORK AND EARTH DISTURBANCE SHALL BE DONE IN A MANNER THAT MINIMIZES POLLUTION OF ANY ON-SITE OR OFF-SITE WATERS, INCLUDING WETLANDS.

3. NOTWITHSTANDING ANYTHING DEPICTED IN THESE PLANS IN WORDS OR GRAPHIC REPRESENTATION, ALL DESIGN AND CONSTRUCTION RELATED TO DRAINAGE AND EROSION CONTROL SHALL CONFORM TO THE STANDARDS AND REQUIREMENTS OF THE MOST RECENT VERSION OF THE RELEVANT ADOPTED EL PASO COUNTY STANDARDS, INCLUDING THE LAND DEVELOPMENT CODE, THE ENGINEERING CRITERIA MANUAL, THE DRAINAGE CRITERIA MANUAL, AND THE DRAINAGE CRITERIA MANUAL VOLUME 2. ANY DEVIATIONS TO REGULATIONS AND STANDARDS MUST BE REQUESTED, AND APPROVED, IN WRITING.

4. A SEPARATE STORMWATER MANAGEMENT PLAN (SWMP) FOR THIS PROJECT SHALL BE COMPLETED AND AN EROSION AND STORMWATER QUALITY CONTROL PERMIT (ESQCP) ISSUED PRIOR TO COMMENCING CONSTRUCTION. DURING CONSTRUCTION THE SWMP IS THE RESPONSIBILITY OF THE DESIGNATED STORMWATER MANAGER, SHALL BE LOCATED ON SITE AT ALL TIMES AND SHALL BE KEPT UP TO DATE WITH WORK PROGRESS AND CHANGES IN THE FIELD.

5. ONCE THE ESQCP HAS BEEN ISSUED, THE CONTRACTOR MAY INSTALL THE INITIAL STAGE EROSION AND SEDIMENT CONTROL BMP'S AS INDICATED ON THE GRADING & EROSION CONTROL PLAN. A PRECONSTRUCTION MEETING BETWEEN THE CONTRACTOR, ENGINEER, AND EL PASO COUNTY WILL BE HELD PRIOR TO ANY CONSTRUCTION. IT IS THE RESPONSIBILITY OF THE APPLICANT TO COORDINATE THE MEETING TIME AND PLACE WITH COUNTY DSD INSPECTIONS STAFF.

6. SOIL EROSION CONTROL MEASURES FOR ALL SLOPES, CHANNELS, DITCHES, OR ANY DISTURBED LAND AREA SHALL BE COMPLETED WITHIN 21 CALENDAR DAYS AFTER FINAL GRADING, OR FINAL EARTH DISTURBANCE, HAS BEEN COMPLETED. DISTURBED AREAS AND STOCKPILES WHICH ARE NOT AT FINAL GRADE BUT WILL REMAIN DORMANT FOR LONGER THAN 30 DAYS SHALL ALSO BE MULCHED WITHIN 21 DAYS AFTER INTERIM GRADING. AN AREA THAT IS GOING TO REMAIN IN INTERIM STATE FOR MORE THAN 60 DAYS SHALL ALSO BE SEEDED. ALL TEMPORARY SOIL EROSION CONTROL MEASURES AND BMP'S SHALL BE MAINTAINED UNTIL PERMANENT SOIL EROSION CONTROL MEASURES ARE IMPLEMENTED AND ESTABLISHED.

7. TEMPORARY SOIL EROSION CONTROL FACILITIES SHALL BE REMOVED AND EARTH DISTURBANCE AREAS GRADED AND STABILIZED WITH PERMANENT SOIL EROSION CONTROL MEASURES PURSUANT TO STANDARDS AND SPECIFICATION PRESCRIBED IN THE DRAINAGE CRITERIA MANUAL (DCM) VOLUME 2 AND THE ENGINEERING CRITERIA MANUAL (ECM) APPENDIX I.

8. ALL PERSONS ENGAGED IN EARTH DISTURBANCE SHALL IMPLEMENT AND MAINTAIN ACCEPTABLE SOIL EROSION AND SEDIMENT CONTROL MEASURES INCLUDING BMP'S IN CONFORMANCE WITH THE EROSION CONTROL TECHNICAL STANDARDS OF THE DCM VOLUME 2 AND IN ACCORDANCE WITH THE STORMWATER MANAGEMENT PLAN (SWMP).

9. ALL TEMPORARY EROSION CONTROL FACILITIES INCLUDING BMP'S AND ALL PERMANENT FACILITIES INTENDED TO CONTROL EROSION OF ANY EARTH DISTURBANCE OPERATIONS, SHALL BE INSTALLED AS DEFINED IN THE APPROVED PLANS, THE SWMP AND THE DCM VOLUME 2 AND MAINTAINED THROUGHOUT THE DURATION OF THE EARTH DISTURBANCE OPERATION.

10. ANY EARTH DISTURBANCE SHALL BE CONDUCTED IN SUCH A MANNER SO AS TO EFFECTIVELY REDUCE ACCELERATED SOIL EROSION AND RESULTING SEDIMENTATION. ALL DISTURBANCES SHALL BE DESIGNED, CONSTRUCTED, AND COMPLETED SO THAT THE EXPOSED AREA OF ANY DISTURBED LAND SHALL BE LIMITED TO THE SHORTEST PRACTICAL PERIOD OF TIME.

11. ANY TEMPORARY OR PERMANENT FACILITY DESIGNED AND CONSTRUCTED FOR THE CONVEYANCE OF STORMWATER AROUND, THROUGH, OR FROM THE EARTH DISTURBANCE AREA SHALL BE DESIGNED TO LIMIT THE DISCHARGE TO A NON-EROSIVE VELOCITY.

12. CONCRETE WASH WATER SHALL BE CONTAINED AND DISPOSED OF IN ACCORDANCE WITH THE SWMP. NO WASH WATER SHALL BE DISCHARGED TO OR ALLOWED TO RUNOFF TO STATE WATERS, INCLUDING ANY SURFACE OR SUBSURFACE STORM DRAINAGE SYSTEM OR FACILITIES.

13. EROSION CONTROL BLANKETING IS TO BE USED ON THE RE-GRADED DITCH.

14. VEHICLE TRACKING OF SOILS AND CONSTRUCTION DEBRIS OFF-SITE SHALL BE MINIMIZED. MATERIALS TRACKED OFFSITE SHALL BE CLEANED UP AND PROPERLY DISPOSED OF IMMEDIATELY.

15. CONTRACTOR SHALL BE RESPONSIBLE FOR THE REMOVAL OF ALL WASTES FROM THE CONSTRUCTION SITE FOR DISPOSAL IN ACCORDANCE WITH LOCAL AND STATE REGULATORY REQUIREMENTS. NO CONSTRUCTION DEBRIS, TREE SLASH, BUILDING MATERIAL WASTES OR UNUSED BUILDING MATERIALS SHALL BE BURIED, DUMPED, OR DISCHARGED AT THE SITE.

16. THE OWNER, SITE DEVELOPER, CONTRACTOR, AND/OR THEIR AUTHORIZED AGENTS SHALL BE RESPONSIBLE FOR THE REMOVAL OF ALL CONSTRUCTION DEBRIS, DIRT, TRASH, ROCK, SEDIMENT, AND SAND THAT MAY ACCUMULATE IN THE STORM SEWER OR OTHER DRAINAGE CONVEYANCE SYSTEM AND STORMWATER APPURTENANCES AS A RESULT OF SITE DEVELOPMENT.

17. THE QUANTITY OF MATERIALS STORED ON THE PROJECT SITE SHALL BE LIMITED, AS MUCH AS PRACTICAL, TO THAT QUANTITY REQUIRED TO PERFORM THE WORK IN AN ORDERLY SEQUENCE. ALL MATERIALS STORED ON-SITE SHALL BE STORED IN A NEAT, ORDERLY MANNER, IN THEIR ORIGINAL CONTAINERS, WITH ORIGINAL MANUFACTURERS LABELS.

18. NO CHEMICALS ARE TO BE USED BY THE CONTRACTOR, WHICH HAVE THE POTENTIAL TO BE RELEASED IN STORMWATER UNLESS PERMISSION FOR THE USE OF A SPECIFIC CHEMICAL IS GRANTED IN WRITING BY THE ECM ADMINISTRATOR. IN GRANTING THE USE OF SUCH CHEMICALS, SPECIAL CONDITIONS AND MONITORING MAY BE REQUIRED.

19. BULK STORAGE STRUCTURES FOR PETROLEUM PRODUGTS AND OTHER CHEMICALS SHALL HAVE ADEQUATE PROTECTION SO AS TO CONTAIN ALL SPILLS AND PREVENT ANY SPILLED MATERIAL FROM ENTERING STATE WATERS, INCLUDING ANY SURFACE OR SUBSURFACE STORM DRAINAGE SYSTEM OR FACILITIES.

20. NO PERSON SHALL CAUSE THE IMPEDIMENT OF STORMWATER FLOW IN THE FLOWLINE OF THE CURB & GUTTER OR IN THE DITCHLINE.

21. INDIVIDUALS SHALL COMPLY WITH THE "COLORADO WATER QUALITY CONTROL ACT" (TITLE 25, ARTICLE 8, CRS), AND THE "CLEAN WATER ACT" (33 USC 1344). IN ADDITION TO THE REQUIREMENTS INCLUDED IN THE DCM VOLUME 2 AND THE CM APPENDIX I. ALL APPROPRIATE PERMITS MUST BE OBTAINED BY THE CONTRACTOR PRIOR TO CONSTRUCTION (NPDES, FLOODPLAIN, 404, FUGITIVE DUST, ETC.). IN THE EVENT OF CONFLICTS BETWEEN THESE REQUIREMENTS AND LAWS, RULES OR REGULATIONS OF OTHER FEDERAL, STATE, OR COUNTY AGENCIES, THE MORE RESTRICTIVE LAWS, RULES, OR REGULATIONS SHALL APPLY.

22. ALL CONSTRUCTION TRAFFIC MUST ENTER/EXIT THE SITE AT APPROVED CONSTRUCTION ACCESS POINTS.

23. PRIOR TO ACTUAL CONSTRUCTION THE PERMITEE SHALL VERIFY THE LOCATION OF EXISTING UTILITIES.

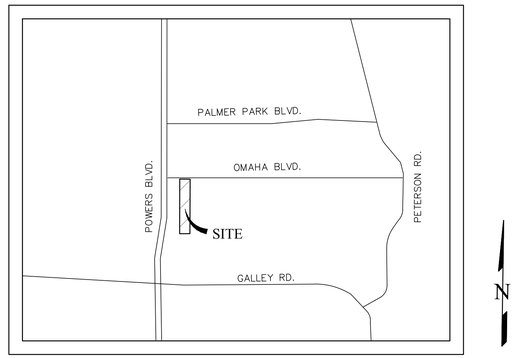

VICINITY MAP
N.T.S.

GRADING NOTES CONTINUED

24. A WATER SOURCE SHALL BE AVAILABLE ON SITE DURING EARTHWORK OPERATIONS AND UTILIZED AS REQUIRED TO MINIMIZE DUST FROM EARTHWORK EQUIPMENT AND WIND.

25. AT LEAST TEN DAYS PRIOR TO THE ANTICIPATED START OF CONSTRUCTION, FOR PROJECTS THAT WILL DISTURB 1 ACRE OR MORE, THE OWNER OR OPERATOR OF CONSTRUCTION ACTIVITY SHALL SUBMIT A PERMIT APPLICATION FOR STORMWATER DISCHARGE TO THE COLORADO DEPARTMENT OF PUBLIC HEALTH AND ENVIRONMENT, WATER QUALITY DIVISION. THE APPLICATION CONTAINS CERTIFICATION OF COMPLETION OF A STORMWATER MANAGEMENT PLAN (SWMP), OF WHICH THIS GRADING AND EROSION CONTROL PLAN MAY BE A PART. FOR INFORMATION OR APPLICATION MATERIALS CONTACT:
COLORADO DEPARTMENT OF PUBLIC HEALTH AND ENVIRONMENT
WATER QUALITY CONTROL DIVISION
WQCD - PERMITS
4300 CHERRY CREEK DRIVE SOUTH
DENVER, CO 80246-1530
ATTENTION: PERMITS UNIT

26. ALL PERSONS ENGAGED IN EARTH DISTURBANCE SHALL IMPLEMENT AND MAINTAIN ACCEPTABLE SOIL EROSION AND SEDIMENT CONTROL MEASURES INCLUDING BMP'S IN CONFORMANCE WITH THE EROSION CONTROL TECHNICAL STANDARDS OF THE MANUAL AND IN ACCORDANCE WITH THE EROSION AND STORMWATER QUALITY CONTROL PLAN APPROVED BY THE EL PASO COUNTY, IF REQUIRED.

27. SPILL PREVENTION AND CONTAINMENT MEASURES SHALL BE USED AT STORAGE, AND EQUIPMENT FUELING AND SERVICING AREAS TO PREVENT THE POLLUTION OF ANY STATE WATERS, INCLUDING WETLANDS. ALL SPILLS SHALL BE CLEANED UP IMMEDIATELY AFTER DISCOVERY, OR CONTAINED UNTIL APPROPRIATE CLEANUP METHODS CAN BE EMPLOYED. MANUFACTURER'S RECOMMENDED METHODS FOR SPILL CLEANUP SHALL BE FOLLOWED, ALONG WITH PROPER DISPOSAL METHODS.

28. A COPY OF THE ACCEPTED EROSION CONTROL PERMIT, SIGNED PLANS AND SIGNED MANUAL SHALL BE ON-SITE @ ALL TIMES DURING CONSTRUCTION.

EL PASO COUNTY STANDARD NOTES

1. ALL DRAINAGE AND ROADWAY CONSTRUCTION SHALL MEET THE STANDARDS AND SPECIFICATIONS OF THE CITY OF COLORADO SPRINGS/EL PASO COUNTY DRAINAGE CRITERIA MANUAL, VOLUMES 1 & 2 AND THE EL PASO COUNTY ENGINEERING CRITERIA MANUAL.

2. CONTRACTOR SHALL BE RESPONSIBLE FOR THE NOTIFICATION AND FIELD NOTIFICATION OF ALL EXISTING UTILITIES, WHETHER SHOWN ON THE PLANS OR NOT, BEFORE BEGINNING CONSTRUCTION. LOCATION OF EXISTING UTILITIES SHALL BE VERIFIED BY THE CONTRACTOR PRIOR TO CONSTRUCTION. ALL 811 TO CONTACT THE UTILITY NOTIFICATION CENTER OF COLORADO (UNCC).

3. CONTRACTOR SHALL KEEP A COPY OF THESE APPROVED PLANS, THE GRADING AND EROSION CONTROL PLAN, THE STORMWATER MANAGEMENT PLAN (SWMP), THE SOILS AND GEOTECHNICAL REPORT, AND THE APPROPRIATE DESIGN AND CONSTRUCTION STANDARDS AND SPECIFICATIONS AT THE JOB SITE AT ALL TIMES, INCLUDING THE FOLLOWING:
A. EL PASO COUNTY ENGINEERING CRITERIA MANUAL (ECM)
B. CITY OF COLORADO SPRINGS/EL PASO COUNTY DRAINAGE CRITERIA MANUAL, VOLUMES 1 & 2
C. COLORADO DEPARTMENT OF TRANSPORTATION (CDOT) STANDARD SPECIFICATIONS FOR ROAD AND BRIDGE CONSTRUCTION
D. CDOT M & s STANDARDS.

4. IT IS THE DESIGN ENGINEER'S RESPONSIBILITY TO ACCURATELY SHOW EXISTING CONDITIONS, BOTH ONSITE AND OFFSITE, ON THE CONSTRUCTION PLANS. ANY MODIFICATIONS NECESSARY DUE TO CONFLICTS, OMISSIONS, OR CHANGED CONDITIONS WILL BE ENTIRELY THE DEVELOPER'S RESPONSIBILITY TO RECTIFY.

5. IT IS THE CONTRACTORS RESPONSIBILITY TO UNDERSTAND THE REQUIREMENTS OF ALL JURISDICTIONAL AGENCIES AND TO OBTAIN ALL REQUIRED PERMITS, INCLUDING BUT NOT LIMITED TO EL PASO COUNTY EROSION AND STORMWATER QUALITY CONTROL PERMIT (ESQCP), REGIONAL BUILDING FLOODPLAIN DEVELOPMENT PERMIT, U.S. ARMY CORPS OF ENGINEERS-ISSUED 401 AND/OR 404 PERMITS, AND COUNTY AND STATE FUGITIVE DUST PERMITS.

6. CONTRACTOR SHALL NOT DEVIATE FROM THE PLANS WITHOUT FIRST OBTAINING WRITTEN APPROVAL FROM THE DESIGN ENGINEER AND DSD CONTRACTOR SHALL NOTIFY THE DESIGN ENGINEER IMMEDIATELY UPON DISCOVERY OF ANY ERRORS OR INCONSISTENCIES.

7. THE LIMITS OF CONSTRUCTION SHALL REMAIN WITHIN THE PROPERTY LINE UNLESS OTHERWISE NOTED. THE OWNER/DEVELOPER SHALL OBTAIN WRITTEN PERMISSION AND EASEMENTS, WHERE REQUIRED, FROM ADJOINING PROPERTY OWNER(S) PRIOR TO ANY OFF-SITE DISTURBANCE, GRADING OR CONSTRUCTION.

ADDRESS

5835 OMAHA BLVD., COLORADO SPRINGS, CO 80915

LEGAL DESCRIPTION

LOT 1 POWERS POINTE FIL NO 1
AS RECORDED AT RECEPTION NUMBER 5407205013
SAID LOT BEING 5.15 ACRES

SITE DATA

OWNER/PETITIONER:
A STORAGE PLACE COLORADO SPRINGS LLC
5835 OMAHA BLVD.
COLORADO SPRINGS, CO 80915
(719) 694-0246 OFFICE

PREPARER:
TERRA NOVA ENGINEERING, INC.
721 S. 23RD ST.
COLORADO SPRINGS, CO 80904
(719) 635-6422 OFFICE
(719) 499-2255 MOBILE

DESCRIPTION OF ACTIVITIES:

THE DEVELOPER IS PROPOSING THE ADDITION OF A 6,700 SF AND A 14,625 SF MINI-STORAGE BUILDING IN AREAS WHICH ARE CURRENTLY USED FOR PARKING ON AN EXISTING MINI-STORAGE LOT. THE SITE CURRENTLY CONSISTS OF A DEVELOPED LOT WHERE THE GROUND IS MOSTLY COVERED IN CONCRETE, ASPHALT AND GRAVEL. THERE ARE NO EROSION CONTROL MEASURES CURRENTLY IN PLACE.

EROSION CONTROL MEASURES SHALL BE IMPLEMENTED IN A MANNER THAT WILL PROTECT PROPERTIES AND PUBLIC FACILITIES FROM THE ADVERSE EFFECTS OF EROSION AND SEDIMENTATION AS A RESULT OF CONSTRUCTION AND EARTHWORK ACTIVITIES. IT IS ANTICIPATED THAT CONSTRUCTION ACTIVITIES WILL OCCUR BETWEEN SUMMER 2019 AND FALL 2019 AT WHICH POINT IT WILL BE CONSIDERED COMPLETED.

CONSTRUCTION PHASING IS ANTICIPATED TO OCCUR AS FOLLOWS:
PHASE 1:
PRIOR TO START OF CONSTRUCTION, INITIAL EROSION CONTROL MEASURES TO BE INSTALLED INCLUDE, BUT NOT LIMITED TO VEHICLE TRACKING CONTROL (VTC) PADS AT THE SITE EXIT POINTS **ONTO PAVEMENT, SEDIMENT CONTROL LOGS (SCL) ALONG THE PROPERTY BOUNDARY ON THE WEST AND EAST SIDES OF THE SITE,** A STAGING AREA (SSA) WHICH WILL REMAIN IN PLACE UNTIL CONSTRUCTION IS COMPLETED. ALSO INCLUDED IN THIS PHASE WILL BE INSTALLATION OF SILT FENCE (SF) AROUND THE BASE OF THE DIRT STOCKPILE AREA. UNTIL THE STOCKPILE HAS BEEN REMOVED, THE SILT FENCE SHALL REMAIN IN PLACE AND BE MAINTAINED IN SUCH A WAY AS TO REDUCE TRANSFERENCE OF SEDIMENTATION OVER THE SITE.

PHASE 2:
SILT FENCE WILL BE REMOVED FROM THE DIRT STOCKPILE AREA. THE DIRT STOCKPILE (SP) WILL BE REMOVED AND REVEGETATED OR PAVED AS PART OF THIS PHASE. ALL OTHER BMP'S SHALL REMAIN IN PLACE UNTIL A LATER PHASE.

PHASE 3:
ANY AREA THAT IS GOING TO REMAIN IN AN INTERIM STATE FOR MORE THAN 60 DAYS SHALL BE SEEDED IN ORDER TO ESTABLISH A VEGETATIVE COVER UNTIL THE FINAL LANDSCAPING IS INSTALLED. ALL TEMPORARY SOIL EROSION CONTROL MEASURES AND BMP'S SHALL BE MAINTAINED UNTIL PERMANENT SOIL EROSION CONTROL MEASURES ARE IMPLEMENTED AND VEGETATION HAS BEEN ESTABLISHED TO 70% ON AREAS NOT COVERED BY GRAVEL.

PHASE 4:
FINAL CONSTRUCTION ACTIVITIES HAVE BEEN COMPLETED AT THIS POINT. THE SILT FENCE, VEHICLE TRACKING CONTROL PADS, SEDIMENT CONTROL LOGS AND STAGING AREAS HAVE ALL BEEN REMOVED AND PERMANENT EROSION CONTROL MEASURES HAVE BEEN ESTABLISHED.

THE TOTAL SITE SIZE IS 5.15 ACRES. THE SITE IS MOSTLY DEVELOPED AND SHALL BE MAINTAINED TO REDUCE SEDIMENTATION FROM MIGRATING TO OFF-SITE OR DOWNSTREAM CREEK BEDS.

THE SOILS ON THIS SITE ARE NOTED AS 100% TYPE 10, BLENDON SANDY LOAM W/0-3 PERCENT SLOPES. THE SOIL IS IN HYDROLOGIC SOIL GROUP B. A SOILS MAP HAS BEEN INCLUDED IN THE FINAL DRAINAGE REPORT. EXISTING SITE VEGETATION CONSISTS OF NATIVE GRASSES AND TREES. THERE ARE NO WETLANDS ON THIS SITE.

THERE ARE NO POTENTIAL POLLUTANTS EXISTING OR PROPOSED FOR STORAGE ON THIS SITE.

THE RECEIVING WATERS FOR THIS AREA IS FOUNTAIN CREEK WITHIN THE SAND CREEK DRAINAGE BASIN.

THE BEST MANAGEMENT PRACTICES (BMP'S) PROPOSED FOR THIS SITE INCLUDE THE FOLLOWING:
1. TEMPORARY SEDIMENT CONTROL LOGS & SEEDING,
2. VEHICLE TRACKING CONTROL AT THE EXIT POINT OF THE SITE,
3. SEDIMENT CONTROL LOGS INSTALLED ALONG THE EXISTING WEST AND EAST PROPERTY BOUNDARIES,
4. AND SILT FENCING AROUND THE SITE AS NEEDED.

THE PROPERTY OWNER OR OWNERS REPRESENTATIVE IS RESPONSIBLE FOR INSPECTING AND MAINTAINING THE SITE ON A REGULAR BASIS. INITIAL CRITERIA FOR THE OCCURRENCE OF INSPECTIONS IS AS FOLLOWS:
1. ONCE EVERY 14 DAYS OR
2. AFTER ANY PRECIPITATION OR SNOWMELT EVENT THAT SIGNIFICANT ENOUGH TO CAUSE SURFACE EROSION.

A WRITTEN RECORD OF INSPECTIONS SHALL BE KEPT BY THE OWNER OR OWNERS REPRESENTATIVE AND MADE AVAILABLE TO THE COUNTY UPON REQUEST. THIS WILL CONTINUE UNTIL THE SITE IS STABILIZED AND THE STOCKPILE IS NO LONGER NEEDED.

A COST ESTIMATE FOR THE BMP'S ON THIS SITE IS INCLUDED ON THIS PLAN AND IN THE FINAL DRAINAGE REPORT.

FLOODPLAIN STATEMENT:

THIS PROPERTY IS LOCATED WITHIN ZONE X (AREAS DETERMINED TO BE OUTSIDE OF THE 500-YEAR FLOODPLAIN) AS ESTABLISHED BY THE FEDERAL EMERGENCY MANAGEMENT AGENCY (FEMA), PER FLOOD INSURANCE RATE MAP (FIRM) PANELS 08041C0751 G & 08041C0752 G (BOTH EFFECTIVE: DECEMBER 7, 2018).

GENERAL NOTES

1. THE PLAN SHALL NOT SUBSTANTIALLY CHANGE THE DEPTH OF COVER, OR ACCESS TO UTILITY FACILITIES. ADDITIONALLY, THE PLAN SHALL NOT INCREASE OR DIVERT WATER TOWARDS UTILITY FACILITIES. ANY CHANGES TO UTILITY FACILITIES TO ACCOMMODATE THE PLAN, MUST BE DISCUSSED AND AGREED TO BY THE AFFECTED UTILITY PRIOR TO IMPLEMENTING THE PLAN. THE RESULTING COST TO RELOCATE OR PROTECT UTILITIES, OR PROVIDE INTERIM ACCESS IS AT THE EXPENSE OF THE PLAN APPLICANT.

2. THE LOCATIONS OF EXISTING UTILITIES HAVE BEEN SHOWN ACCORDING TO THE BEST AVAILABLE INFORMATION. THE CONTRACTOR IS RESPONSIBLE FOR FIELD LOCATION AND VERIFICATION OF EXISTING UTILITIES PRIOR TO BEGINNING WORK. IF IT APPEARS THAT THERE COULD BE A CONFLICT WITH ANY UTILITIES, WHETHER INDICATED ON THE PLANS OR NOT, THE CONTRACTOR IS TO NOTIFY THE ENGINEER AND OWNER IMMEDIATELY. THE CONTRACTOR IS RESPONSIBLE FOR THE PROTECTION AND REPAIR (IF NECESSARY) OF ALL UTILITIES.

3. THE PREPARED EROSION/SEDIMENT CONTROL PLAN IS TO BE CONSIDERED A PART OF THESE PLANS AND ITS REQUIREMENTS ADHERED TO DURING THE CONSTRUCTION OF THIS PROJECT.

EROSION CONTROL COST OPINION:

1.	VEHICLE TRACKING CONTROL 1 EA. @ $1625/PAD	$ 1,625.00
4.	CONCRETE WASHOUT 1 EA @ $776.00/EA	$ 776.00
5.	SILT FENCE 550 LF @ $4.00/LF	$ 2,200.00
6.	INLET PROTECTION 2 EA @ $153.00/LF	$ 306.00
7.	FUEL SPILL KIT 1 EA @ $200.00/EA	$ 200.00
8.	STRAW BALE CHECK DAMS 1 EA @ $24.00/EA	$ 24.00
	TOTAL	$ 5,131.00

SHEET INDEX

COVER SHEET	1 OF 6
SITE GRADING PLAN	2 OF 6
SITE GRADING PLAN	3 OF 6
SITE GRADING PLAN	4 OF 6
EROSION CONTROL	5 OF 6
EROSION CONTROL DETAILS	6 OF 6

STATEMENTS

DESIGN ENGINEER'S STATEMENT:
THESE DETAILED PLANS AND SPECIFICATIONS WERE PREPARED UNDER MY DIRECTION AND SUPERVISION. SAID PLANS AND SPECIFICATIONS HAVE BEEN PREPARED ACCORDING TO THE CRITERIA ESTABLISHED BY THE COUNTY FOR DETAILED ROADWAY, DRAINAGE, GRADING AND EROSION CONTROL PLANS AND SPECIFICATIONS, AND SAID PLANS AND SPECIFICATIONS ARE IN CONFORMITY WITH APPLICABLE MASTER DRAINAGE PLANS AND MASTER TRANSPORTATION PLANS. SAID PLANS AND SPECIFICATIONS MEET THE PURPOSES FOR WHICH THE PARTICULAR ROADWAY AND DRAINAGE FACILITIES ARE DESIGNED AN ARE CORRECT TO THE BEST OF MY KNOWLEDGE AND BELIEF. I ACCEPT RESPONSIBILITY FOR ANY LIABILITY CAUSED BY ANY NEGLIGENT ACTS, ERRORS OR OMISSIONS ON MY PART TO PREPARATION OF THESE DETAILED PLANS AND SPECIFICATIONS.

L DUCETT, P.E. #32339 DATE
FOR AND ON BEHALF OF TERRA NOVA ENGINEERING, INC.

OWNER/DEVELOPERS STATEMENT:
I, THE OWNER/DEVELOPER HAVE READ AND WILL COMPLY WITH ALL OF THE REQUIREMENTS SPECIFIED IN THESE DETAILED PLANS AND SPECIFICATIONS.

OWNER DATE

ADDRESS STATE ZIP

PHONE FAX

EL PASO COUNTY:
COUNTY PLAN REVIEW IS PROVIDED ONLY FOR GENERAL CONFORMANCE WITH COUNTY DESIGN CRITERIA. THE COUNTY IS NOT RESPONSIBLE FOR THE ACCURACY AND ADEQUACY OF THE DESIGN, DIMENSIONS, AND/OR ELEVATIONS WHICH SHALL BE CONFIRMED AT THE JOB SITE. THE COUNTY THROUGH THE APPROVAL OF THIS DOCUMENT ASSUMES NO RESPONSIBILITY FOR COMPLETENESS AND/OR ACCURACY OF THIS DOCUMENT.
FILED IN ACCORDANCE WITH THE REQUIREMENTS OF THE EL PASO COUNTY LAND DEVELOPMENT CODE, DRAINAGE CRITERIA MANUAL AND ENGINEERING CRITERIA MANUAL AS AMENDED.

JENNIFER IRVINE, P.E., COUNTY ENGINEER/ECM ADMINISTRATOR DATE

PROJ NO: PPR XXXXXX

Terra Nova Engineering, Inc.
Creative Civil Engineering Solutions

Design Development Consultants @
T-BONE CONSTRUCTION INC. GENERAL CONTRACTOR
1310 FORD STREET
COLORADO SPRINGS, CO 80915 (719) 570-1456

(C) ALL RIGHTS RESERVED

Revisions

#	DESCRIPTION	DATE

D1-7133

A STORAGE PLACE

5835 OMAHA BLVD.
COLORADO SPRINGS, CO

SD

DATE	6 MAY 2019
CHECKED	LD
DRAWN BY	JF

COVER SHEET

1/6

721 S. 23RD ST.
COLORADO SPRINGS, CO. 80904

OFFICE: 719-635-6422
FAX: 719-635-6426
www.tnesinc.com

Terra Nova Engineering, Inc.
Creative Civil Engineering Solutions

GRADING LEGEND

EXISTING CONTOURS – MINOR	6132
EXISTING CONTOURS – MAJOR	6130
CONCRETE EDGE	CE
UNDERGROUND LOCATES (YELLOW FLAGS)	ULL(Y)
UNDERGROUND LINE LOCATES (RED FLAGS)	ULL(R)
UNDERGROUND LINE LOCATES (BLUE FLAGS)	ULL(B)
UNDERGROUND LINE LOCATES (ORANGE FLAGS)	ULL(O)
PROPOSED FINISHED GROUND	FG
PROPOSED FINISHED SURFACE	FS
PROPOSED FLOWLINE	FL
SPOT ELEVATION	SE
ASPHALT EDGE	AE
LOW POINT	LP
HIGH POINT	HP
EXISTING ELEVATION	12.00*
GRADE & DIRECTION	2.2%
TERRAIN STRING	TS
BOUNDARY MONUMENT	BM
INLET GRATED	IG
PROPOSED CONTOUR	62
EXISTING SPOT GRADE	14.00
PROPOSED SPOT GRADE	× 14.00

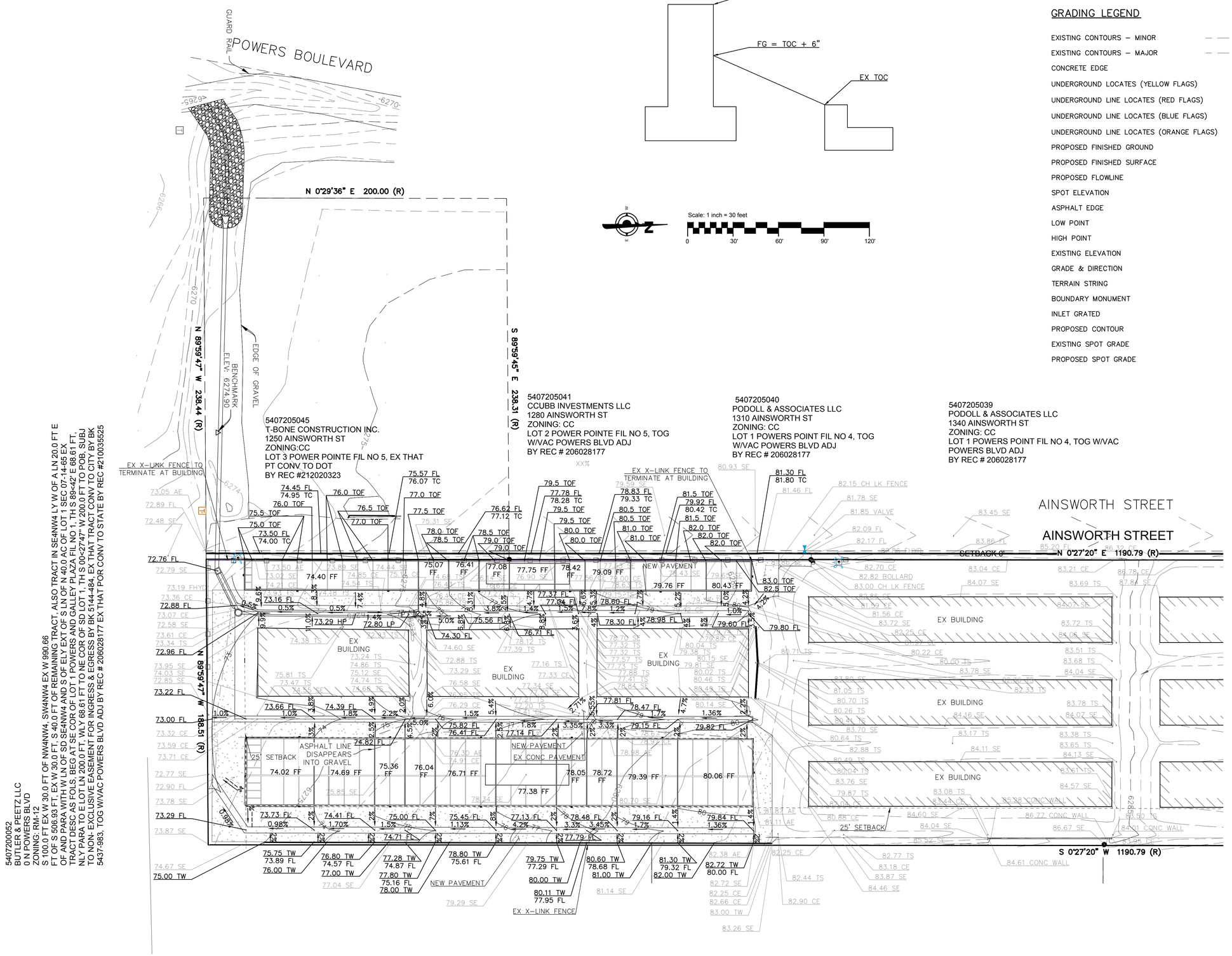

PROJ NO: PPR XXXXXX

Design Development Consultants @
1310 FORD STREET
COLORADO SPRINGS, CO 80915 (719) 570-1456

T-BONE CONSTRUCTION INC. GENERAL CONTRACTOR

(C) ALL RIGHTS RESERVED

Revisions		
#	DESCRIPTION	DATE

D1-7133

A STORAGE PLACE

5835 OMAHA BLVD.
COLORADO SPRINGS, CO

SD

DATE	13 MAY 2019
CHECKED	LD
DRAWN BY	JF

DETAILED GRADING PLAN
2/6

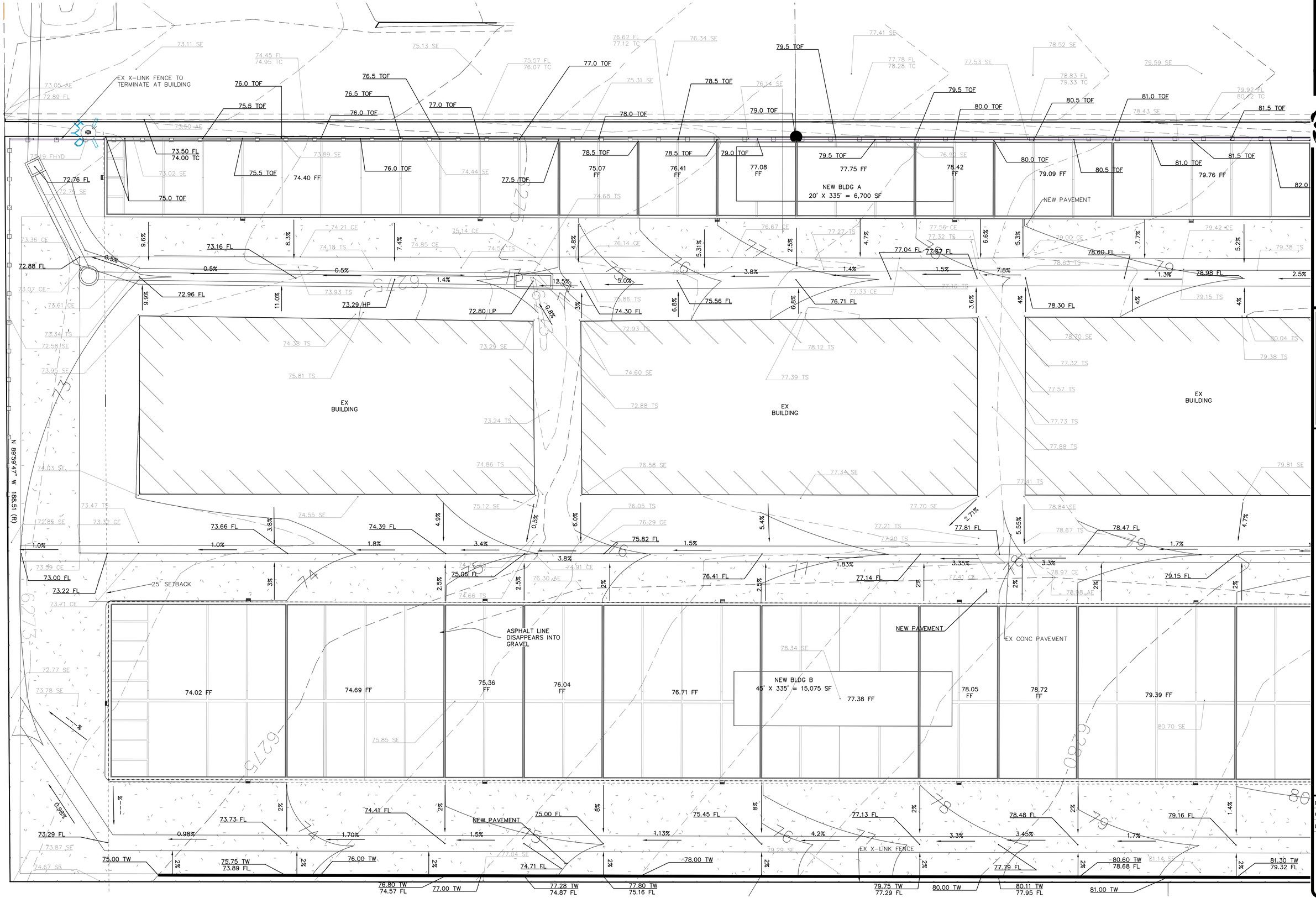

Terra Nova Engineering, Inc.
Creative Civil Engineering Solutions

T-BONE CONSTRUCTION INC.
GENERAL CONTRACTOR

Design Development
Consultants @
1310 FORD STREET
COLORADO SPRINGS, CO 80915 (719) 570-1456

(C) ALL RIGHTS RESERVED

Revisions		
#	DESCRIPTION	DATE

D1-7133

A STORAGE PLACE

5835 OMAHA BLVD.
COLORADO SPRINGS, CO

SD

DATE	13 MAY 2019
CHECKED	LD
DRAWN BY	JF

DETAILED GRADING PLAN
3/6

N:\jobs\1745.00\drawings\174500 GEC.dwg, 5/13/2019 3:00:16 PM, DWG To PDF.pc3

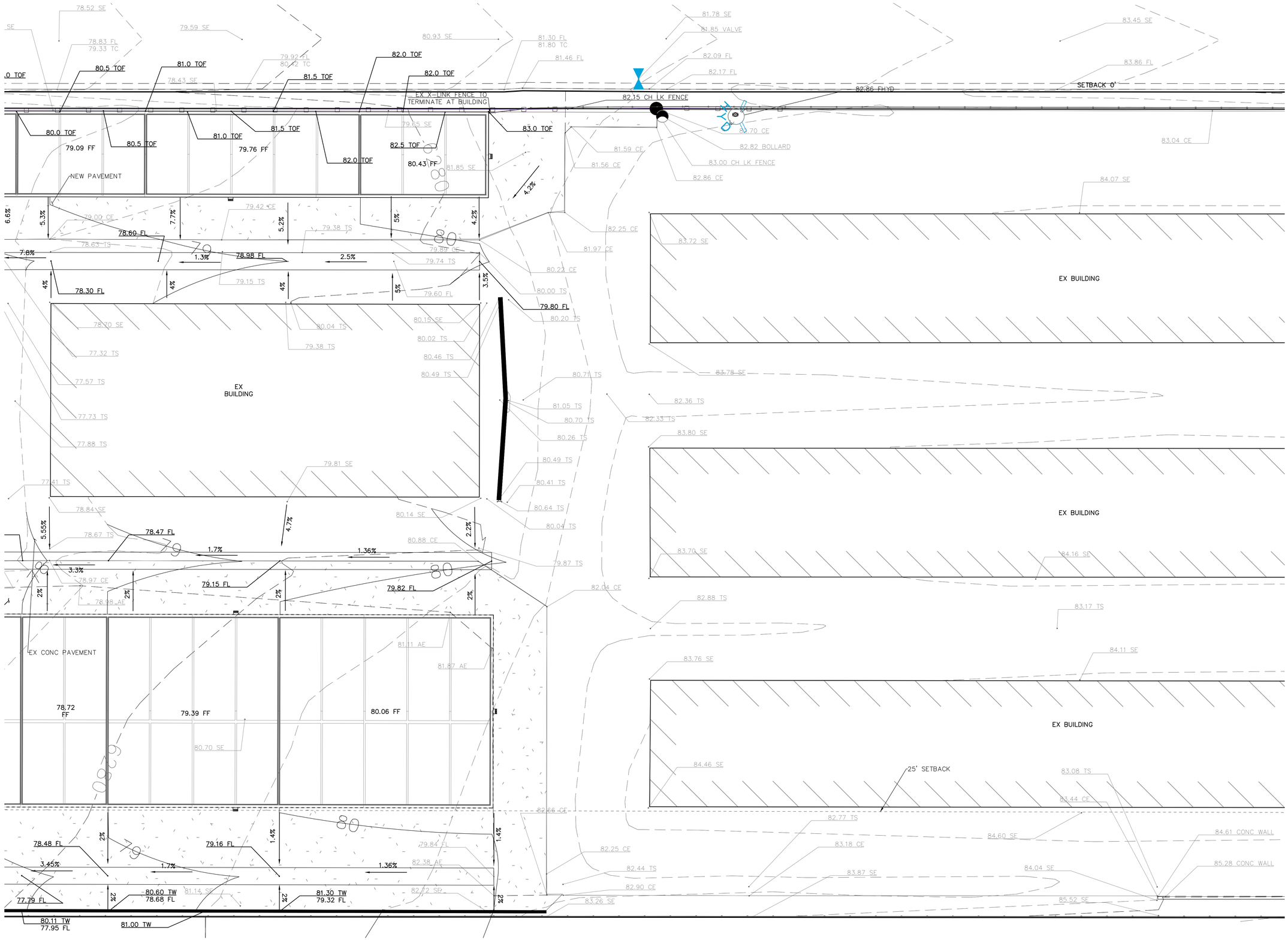

Terra Nova Engineering, Inc.
Creative Civil Engineering Solutions

T-BONE CONSTRUCTION INC.
GENERAL CONTRACTOR

Design Development Consultants @
1310 FORD STREET
COLORADO SPRINGS, CO 80915 (719) 570-1456

(C) ALL RIGHTS RESERVED

Revisions

#	DESCRIPTION	DATE

D1-7133

A STORAGE PLACE

5835 OMAHA BLVD.
COLORADO SPRINGS, CO

SD

DATE	13 MAY 2019
CHECKED	LD
DRAWN BY	JF

DETAILED GRADING PLAN

4/6

N:\jobs\1745.00\drawings\174500 GEC.dwg, 5/13/2019 3:01:53 PM, DWG To PDF.pc3

721 S. 23RD ST.
COLORADO SPRINGS, CO. 80904

OFFICE: 719-635-6422
FAX: 719-635-6426
www.tnesinc.com

Terra Nova Engineering, Inc.
Creative Civil Engineering Solutions

EROSION CONTROL LEGEND

KEY	TITLE	SYMBOL
EL	EROSION LOGS	
SF	SILT FENCE	SF
VTC	VEHICLE TRACKING CONTROL	
CD	SWALE CHECK DAM	
IP	INLET PROTECTION	
CW	CONCRETE WASHOUT AREA	
SSA	MATERIALS STAGING AREA	
SP	DIRT STOCKPILE AREA	

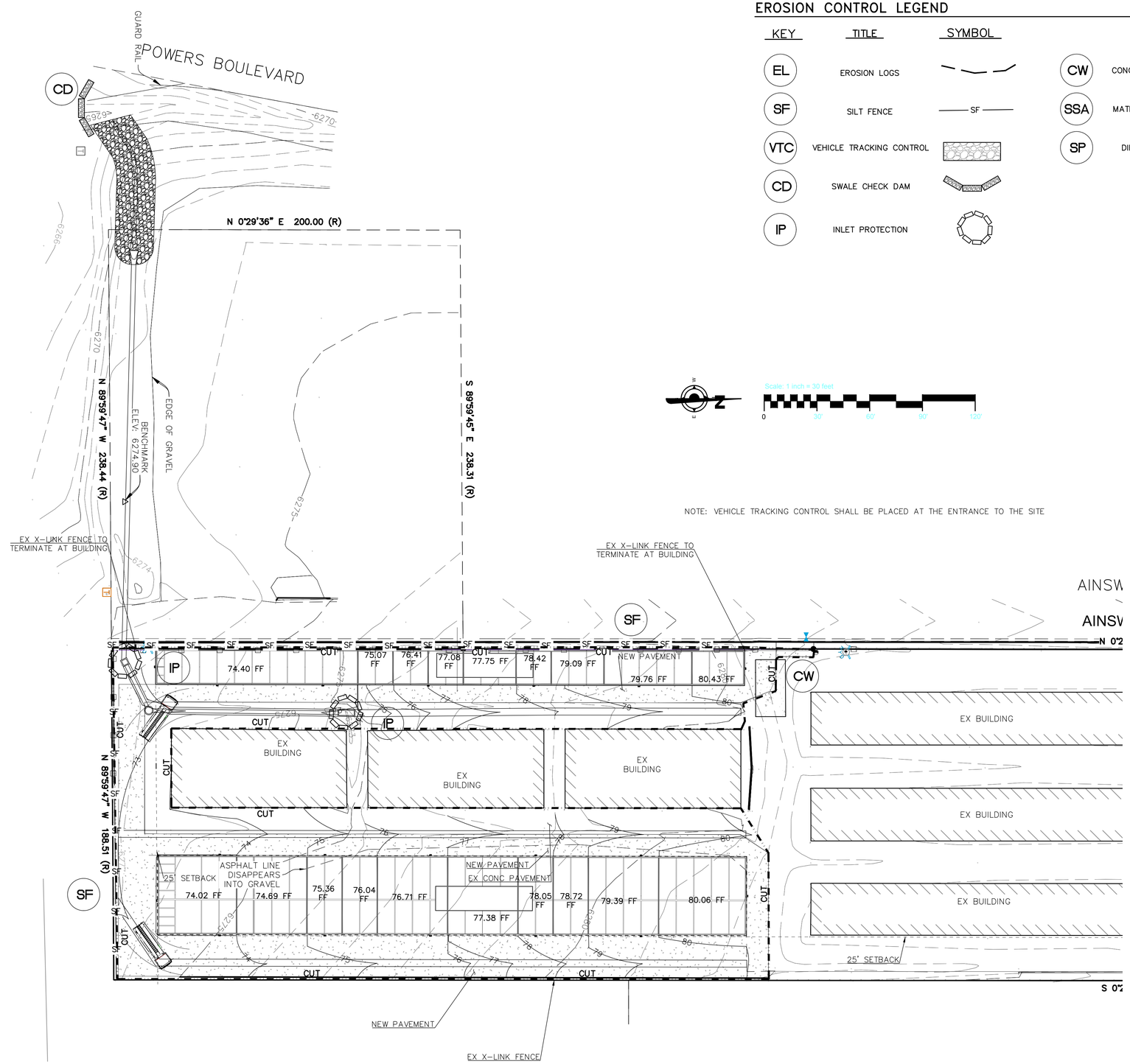

Scale: 1 inch = 30 feet
0 30' 60' 90' 120'

NOTE: VEHICLE TRACKING CONTROL SHALL BE PLACED AT THE ENTRANCE TO THE SITE

PROJ NO: PPR XXXXXX

Design Development Consultants @
T-BONE CONSTRUCTION INC. GENERAL CONTRACTOR
1310 FORD STREET
COLORADO SPRINGS, CO 80915 (719) 570-1456

(C) ALL RIGHTS RESERVED

Revisions

#	DESCRIPTION	DATE

D1-7133

A STORAGE PLACE

5835 OMAHA BLVD.
COLORADO SPRINGS, CO

SD

DATE	13 MAY 2019
CHECKED	LD
DRAWN BY	JF

EROSION CONTROL PLAN
5/6

N:\jobs\1745.00\drawings\174500 GEC.dwg, 5/13/2019 3:05:07 PM, DWG To PDF.pc3

12/6/2017 2:37:15 PM

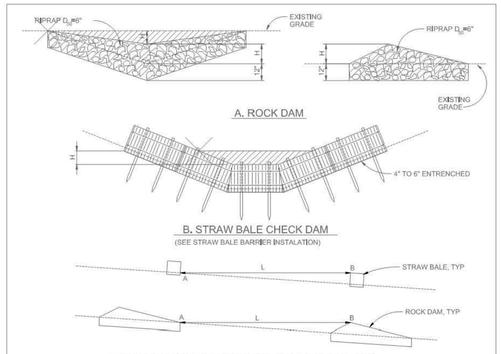

CHECK DAM
NTS

CHECK DAM NOTES

INSTALLATION REQUIREMENTS

1. STRAW BALES USED AS CHECK DAMS ARE TO MEET THE REQUIREMENTS STATED IN FIGURE SBB-2.
2. THE "H" DIMENSION SHALL BE SELECTED TO PROVIDE WEIR FLOW CONVEYANCE FOR 2-YEAR FLOW OR GREATER.

MAINTENANCE REQUIREMENTS

1. REGULAR INSPECTIONS ARE TO BE MADE OF ALL CHECK DAMS, ESPECIALLY AFTER STORM EVENTS.
2. REPLACE STONE AS NECESSARY TO MAINTAIN THE CORRECT HEIGHT OF THE DAM.
3. ACCUMULATED SEDIMENT AND DEBRIS IS TO BE REMOVED FROM BEHIND THE DAMS AFTER EACH STORM OR WHEN 1/2 OF THE ORIGINAL HEIGHT OF THE DAM IS REACHED.
3. CHECK DAMS ARE TO REMAIN IN PLACE AND OPERATIONAL UNTIL THE DRAINAGE AREA AND CHANNEL ARE PERMANENTLY STABILIZED.
4. WHEN CHECK DAMS ARE REMOVED THE CHANNEL LINING OR VEGETATION IS TO BE RESTORED.

City of Colorado Springs Stormwater Quality

Figure CD-1
Check Dam
Construction Detail and Maintenance Requirements

3-20

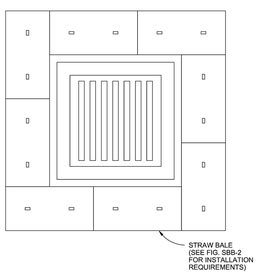

STRAW BALE INLET PROTECTION
NTS

STRAW BALE INLET PROTECTION NOTES

INSTALLATION REQUIREMENTS

1. INLET PROTECTION SHALL BE INSTALLED IMMEDIATELY AFTER CONSTRUCTION OF INLET.
2. BALES ARE TO BE PLACED IN A SINGLE ROW AROUND THE INLET WITH THE END OF THE BALES TIGHTLY ABUTTING ONE ANOTHER.
3. SEE STRAW BALE BARRIER FIGURE SBB-2 FOR INSTALLATION REQUIREMENTS.

MAINTENANCE REQUIREMENTS

1. CONTRACTOR SHALL INSPECT STRAW BALE INLET PROTECTION IMMEDIATELY AFTER EACH RAINFALL, AT LEAST DAILY DURING PROLONGED RAINFALL, AND WEEKLY DURING PERIODS NO RAINFALL.
2. DAMAGED OR INEFFECTIVE INLET PROTECTION SHALL PROMPTLY BE REPAIRED, REPLACING BALES IF NECESSARY, AND UNENTRENCHED BALES NEED TO BE REPAIRED WITH COMPACTED BACKFILL MATERIAL.
3. SEDIMENT SHALL BE REMOVED FROM BEHIND STRAW BALES WHEN IT ACCUMULATES TO APPROXIMATELY 1/3 THE HEIGHT OF THE BARRIER.
4. INLET PROTECTION SHALL BE REMOVED WHEN ADEQUATE VEGETATIVE COVER IS ATTAINED WITHIN THE DRAINAGE AREA AS APPROVED BY THE CITY.

City of Colorado Springs Stormwater Quality

Figure IP-2
Straw Bale Inlet Protection
Construction Detail and Maintenance Requirements

3-26

Vehicle Tracking Control (VTC) SM-4

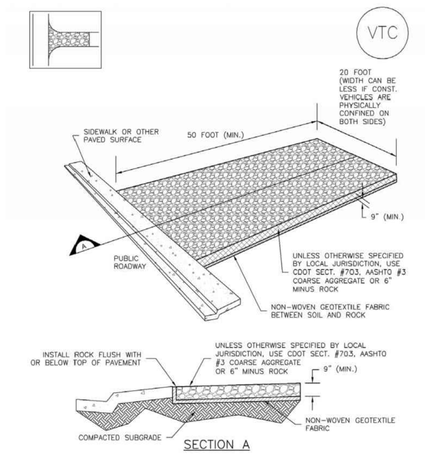

VTC-1. AGGREGATE VEHICLE TRACKING CONTROL

Silt Fence (SF) SC-1

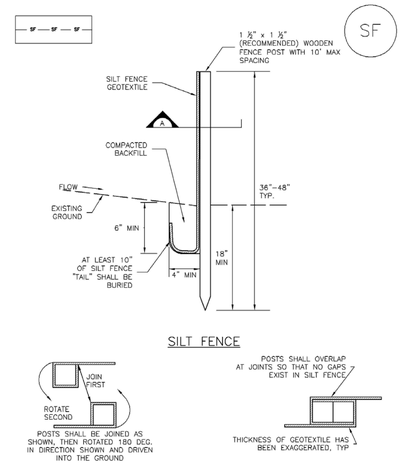

SF-1. SILT FENCE

Concrete Washout Area (CWA) MM-1

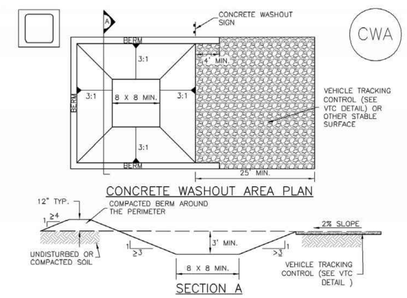

CWA-1. CONCRETE WASHOUT AREA

CWA INSTALLATION NOTES

1. SEE PLAN VIEW FOR:
   –CWA INSTALLATION LOCATION.
2. DO NOT LOCATE AN UNLINED CWA WITHIN 400' OF ANY NATURAL DRAINAGE PATHWAY OR WATERBODY. DO NOT LOCATE WITHIN 1,000' OF ANY WELLS OR DRINKING WATER SOURCES. IF SITE CONSTRAINTS MAKE THIS INFEASIBLE, OR IF HIGHLY PERMEABLE SOILS EXIST ON SITE, THE CWA MUST BE INSTALLED WITH AN IMPERMEABLE LINER (16 MIL MIN. THICKNESS) OR SURFACE STORAGE ALTERNATIVES USING PREFABRICATED CONCRETE WASHOUT DEVICES OR A LINED ABOVE GROUND STORAGE ARE SHOULD BE USED.
3. THE CWA SHALL BE INSTALLED PRIOR TO CONCRETE PLACEMENT ON SITE.
4. CWA SHALL INCLUDE A FLAT SUBSURFACE PIT THAT IS AT LEAST 8' BY 8' SLOPES LEADING OUT OF THE SUBSURFACE PIT SHALL BE 3:1 OR FLATTER. THE PIT SHALL BE AT LEAST 3' DEEP.
5. BERM SURROUNDING SIDES AND BACK OF THE CWA SHALL HAVE MINIMUM HEIGHT OF 1'.
6. VEHICLE TRACKING PAD SHALL BE SLOPED 2% TOWARDS THE CWA.
7. SIGNS SHALL BE PLACED AT THE CONSTRUCTION ENTRANCE, AT THE CWA, AND ELSEWHERE AS NECESSARY TO CLEARLY INDICATE THE LOCATION OF THE CWA TO OPERATORS OF CONCRETE TRUCKS AND PUMP RIGS.
8. USE EXCAVATED MATERIAL FOR PERIMETER BERM CONSTRUCTION.

SM-4 Vehicle Tracking Control (VTC)

STABILIZED CONSTRUCTION ENTRANCE/EXIT INSTALLATION NOTES

1. SEE PLAN VIEW FOR
   –LOCATION OF CONSTRUCTION ENTRANCE(S)/EXIT(S).
   –TYPE OF CONSTRUCTION ENTRANCE(S)/EXITS(S) (WITH/WITHOUT WHEEL WASH, CONSTRUCTION MAT OR TRM).
2. CONSTRUCTION MAT OR TRM STABILIZED CONSTRUCTION ENTRANCES ARE ONLY TO BE USED ON SHORT DURATION PROJECTS (TYPICALLY RANGING FROM A WEEK TO A MONTH) WHERE THERE WILL BE LIMITED VEHICULAR ACCESS.
3. A STABILIZED CONSTRUCTION ENTRANCE/EXIT SHALL BE LOCATED AT ALL ACCESS POINTS WHERE VEHICLES ACCESS THE CONSTRUCTION SITE FROM PAVED RIGHT-OF-WAYS.
4. STABILIZED CONSTRUCTION ENTRANCE/EXIT SHALL BE INSTALLED PRIOR TO ANY LAND DISTURBING ACTIVITIES.
5. A NON-WOVEN GEOTEXTILE FABRIC SHALL BE PLACED UNDER THE STABILIZED CONSTRUCTION ENTRANCE/EXIT PRIOR TO THE PLACEMENT OF ROCK.
6. UNLESS OTHERWISE SPECIFIED BY LOCAL JURISDICTION, ROCK SHALL CONSIST OF DOT SECT. #703, AASHTO #3 COARSE AGGREGATE OR 6" (MINUS) ROCK.

STABILIZED CONSTRUCTION ENTRANCE/EXIT MAINTENANCE NOTES

1. INSPECT BMPs EACH WORKDAY, AND MAINTAIN THEM IN EFFECTIVE OPERATING CONDITION. MAINTENANCE OF BMPs SHOULD BE PROACTIVE, NOT REACTIVE. INSPECT BMPs AS SOON AS POSSIBLE (AND ALWAYS WITHIN 24 HOURS) FOLLOWING A STORM THAT CAUSES SURFACE EROSION, AND PERFORM NECESSARY MAINTENANCE.
2. FREQUENT OBSERVATIONS AND MAINTENANCE ARE NECESSARY TO MAINTAIN BMPs IN EFFECTIVE OPERATING CONDITION. INSPECTIONS AND CORRECTIVE MEASURES SHOULD BE DOCUMENTED THOROUGHLY.
3. WHERE BMPs HAVE FAILED, REPAIR OR REPLACEMENT SHOULD BE INITIATED UPON DISCOVERY OF THE FAILURE.
4. ROCK SHALL BE REAPPLIED OR REGRADED AS NECESSARY TO THE STABILIZED ENTRANCE/EXIT TO MAINTAIN A CONSISTENT DEPTH.
5. SEDIMENT TRACKED ONTO PAVED ROADS IS TO BE REMOVED THROUGHOUT THE DAY AND AT THE END OF THE DAY BY SHOVELING OR SWEEPING. SEDIMENT MAY NOT BE WASHED DOWN STORM SEWER DRAINS.

NOTE: MANY JURISDICTIONS HAVE BMP DETAILS THAT VARY FROM UDFCD STANDARD DETAILS. CONSULT WITH LOCAL JURISDICTIONS AS TO WHICH DETAIL SHOULD BE USED WHEN DIFFERENCES ARE NOTED.

(DETAILS ADAPTED FROM CITY OF BROOMFIELD, COLORADO, NOT AVAILABLE IN AUTOCAD)

SC-1 Silt Fence (SF)

SILT FENCE INSTALLATION NOTES

1. SILT FENCE MUST BE PLACED AWAY FROM THE TOE OF THE SLOPE TO ALLOW FOR WATER PONDING. SILT FENCE AT THE TOE OF A SLOPE SHOULD BE INSTALLED IN A FLAT LOCATION AT LEAST SEVERAL FEET (2–5 FT) FROM THE TOE OF THE SLOPE TO ALLOW ROOM FOR PONDING AND DEPOSITION.
2. A UNIFORM 6" X 4" ANCHOR TRENCH SHALL BE EXCAVATED USING TRENCHER OR SILT FENCE INSTALLATION DEVICE. NO ROAD GRADERS, BACKHOES, OR SIMILAR EQUIPMENT SHALL BE USED.
3. COMPACT ANCHOR TRENCH BY HAND WITH A "JUMPING JACK" OR BY WHEEL ROLLING. COMPACTION SHALL BE SUCH THAT SILT FENCE RESISTS BEING PULLED OUT OF ANCHOR TRENCH BY HAND.
4. SILT FENCE SHALL BE PULLED TIGHT AS IT IS ANCHORED TO THE STAKES. THERE SHOULD BE NO NOTICEABLE SAG BETWEEN STAKES AFTER IT HAS BEEN ANCHORED TO THE STAKES.
5. SILT FENCE FABRIC SHALL BE ANCHORED TO THE STAKES USING 1" HEAVY DUTY STAPLES OR NAILS WITH 1" HEADS. STAPLES AND NAILS SHOULD BE PLACED 3" ALONG THE FABRIC DOWN THE STAKE.
6. AT THE END OF A RUN OF SILT FENCE ALONG A CONTOUR, THE SILT FENCE SHOULD BE TURNED PERPENDICULAR TO THE CONTOUR TO CREATE A "J-HOOK." THE "J-HOOK" EXTENDING PERPENDICULAR TO THE CONTOUR SHOULD BE OF SUFFICIENT LENGTH TO KEEP RUNOFF FROM FLOWING AROUND THE END OF THE SILT FENCE (TYPICALLY 10' – 20').
7. SILT FENCE SHALL BE INSTALLED PRIOR TO ANY LAND DISTURBING ACTIVITIES.

SILT FENCE MAINTENANCE NOTES

1. INSPECT BMPs EACH WORKDAY, AND MAINTAIN THEM IN EFFECTIVE OPERATING CONDITION. MAINTENANCE OF BMPs SHOULD BE PROACTIVE, NOT REACTIVE. INSPECT BMPs AS SOON AS POSSIBLE (AND ALWAYS WITHIN 24 HOURS) FOLLOWING A STORM THAT CAUSES SURFACE EROSION, AND PERFORM NECESSARY MAINTENANCE.
2. FREQUENT OBSERVATIONS AND MAINTENANCE ARE NECESSARY TO MAINTAIN BMPs IN EFFECTIVE OPERATING CONDITION. INSPECTIONS AND CORRECTIVE MEASURES SHOULD BE DOCUMENTED THOROUGHLY.
3. WHERE BMPs HAVE FAILED, REPAIR OR REPLACEMENT SHOULD BE INITIATED UPON DISCOVERY OF THE FAILURE.
4. SEDIMENT ACCUMULATED UPSTREAM OF THE SILT FENCE SHALL BE REMOVED AS NEEDED TO MAINTAIN THE FUNCTIONALITY OF THE BMP, TYPICALLY WHEN DEPTH OF ACCUMULATED SEDIMENTS IS APPROXIMATELY 6".
5. REPAIR OR REPLACE SILT FENCE WHEN THERE ARE SIGNS OF WEAR, SUCH AS SAGGING, TEARING, OR COLLAPSE.
6. SILT FENCE IS TO REMAIN IN PLACE UNTIL THE UPSTREAM DISTURBED AREA IS STABILIZED AND APPROVED BY THE LOCAL JURISDICTION, OR IS REPLACED BY AN EQUIVALENT PERIMETER SEDIMENT CONTROL BMP.
7. WHEN SILT FENCE IS REMOVED, ALL DISTURBED AREAS SHALL BE COVERED WITH TOPSOIL, SEEDED AND MULCHED OR OTHERWISE STABILIZED AS APPROVED BY LOCAL JURISDICTION.

(DETAIL ADAPTED FROM TOWN OF PARKER, COLORADO AND CITY OF AURORA, NOT AVAILABLE IN AUTOCAD)

NOTE: MANY JURISDICTIONS HAVE BMP DETAILS THAT VARY FROM UDFCD STANDARD DETAILS. CONSULT WITH LOCAL JURISDICTIONS AS TO WHICH DETAIL SHOULD BE USED WHEN DIFFERENCES ARE NOTED.

MM-1 Concrete Washout Area (CWA)

CWA MAINTENANCE NOTES

1. INSPECT BMPs EACH WORKDAY, AND MAINTAIN THEM IN EFFECTIVE OPERATING CONDITION. MAINTENANCE OF BMPs SHOULD BE PROACTIVE, NOT REACTIVE. INSPECT BMPs AS SOON AS POSSIBLE (AND ALWAYS WITHIN 24 HOURS) FOLLOWING A STORM THAT CAUSES SURFACE EROSION, AND PERFORM NECESSARY MAINTENANCE.
2. FREQUENT OBSERVATIONS AND MAINTENANCE ARE NECESSARY TO MAINTAIN BMPs IN EFFECTIVE OPERATING CONDITION. INSPECTIONS AND CORRECTIVE MEASURES SHOULD BE DOCUMENTED THOROUGHLY.
3. WHERE BMPs HAVE FAILED, REPAIR OR REPLACEMENT SHOULD BE INITIATED UPON DISCOVERY OF THE FAILURE.
4. THE CWA SHALL BE REPAIRED, CLEANED, OR ENLARGED AS NECESSARY TO MAINTAIN CAPACITY FOR CONCRETE WASTE. CONCRETE MATERIALS, ACCUMULATED IN PIT, SHALL BE REMOVED ONCE THE MATERIALS HAVE REACHED A DEPTH OF 2'.
5. CONCRETE WASHOUT WATER, WASTED PIECES OF CONCRETE AND ALL OTHER DEBRIS IN THE SUBSURFACE PIT SHALL BE TRANSPORTED FROM THE JOB SITE IN A WATER-TIGHT CONTAINER AND DISPOSED OF PROPERLY.
6. THE CWA SHALL REMAIN IN PLACE UNTIL ALL CONCRETE FOR THE PROJECT IS PLACED.
7. WHEN THE CWA IS REMOVED, COVER THE DISTURBED AREA WITH TOP SOIL, SEED AND MULCH OR OTHERWISE STABILIZED IN A MANNER APPROVED BY THE LOCAL JURISDICTION.

(DETAIL ADAPTED FROM DOUGLAS COUNTY, COLORADO AND THE CITY OF PARKER, COLORADO, NOT AVAILABLE IN AUTOCAD).

NOTE: MANY JURISDICTIONS HAVE BMP DETAILS THAT VARY FROM UDFCD STANDARD DETAILS. CONSULT WITH LOCAL JURISDICTIONS AS TO WHICH DETAIL SHOULD BE USED WHEN DIFFERENCES ARE NOTED.

PROJ NO: PPR XXXXXX

721 S. 23RD ST.
COLORADO SPRINGS, CO. 80904

OFFICE: 719-635-6422
FAX: 719-635-6426
www.tnesinc.com

Terra Nova Engineering, Inc.
Creative Civil Engineering Solutions

T-BONE CONSTRUCTION INC. GENERAL CONTRACTOR
Design Development Consultants @
1310 FORD STREET
COLORADO SPRINGS, CO 80915 (719) 570-1456

(C) ALL RIGHTS RESERVED

Revisions		
#	DESCRIPTION	DATE

A STORAGE PLACE
5835 OMAHA BLVD.
COLORADO SPRINGS, CO

D1-7133

SD

DATE	13 MAY 2019
CHECKED	LD
DRAWN BY	JF

EROSION CONTROL DETAILS
6/6

J:_01_PROJECTS\2017 Projects\D1-7204 A Storage Place Addition - DP\T1-7133 A Storage Place Addition\04 REVIT\7133-ASPA_CENTRAL.rvt

N:\jobs\1745.00\drawings\174500 GEC.dwg, 5/13/2019 3:06:41 PM, DWG To PDF.pc3