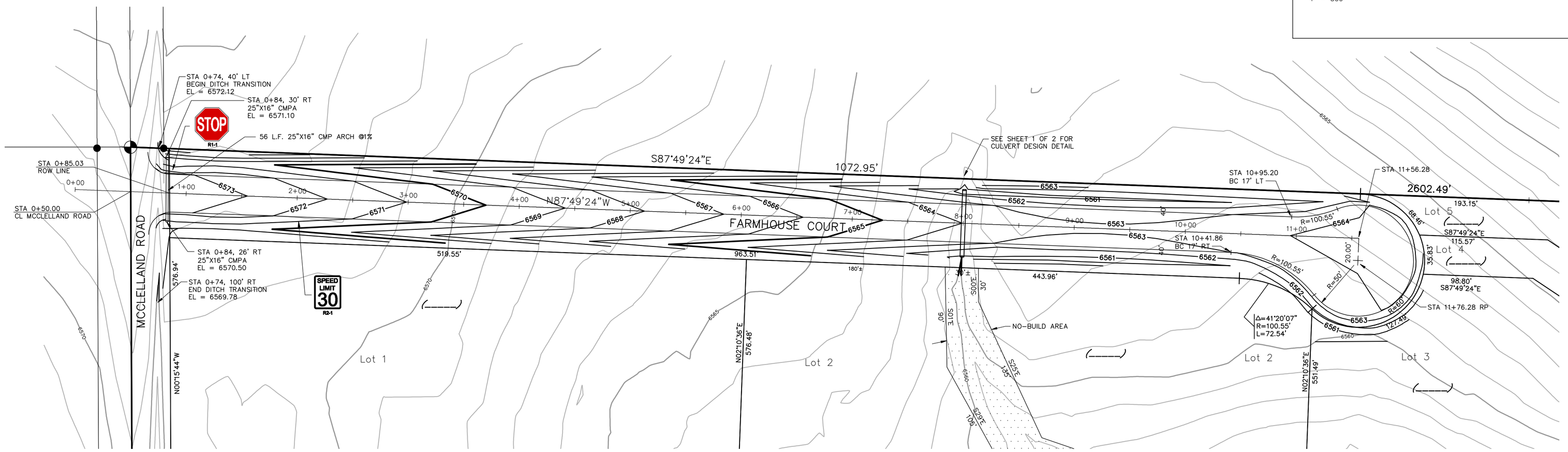

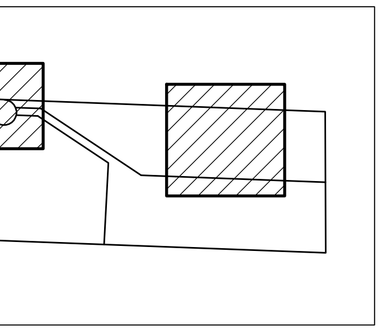

EB ☐ – INDICATES EROSION BARRIER (WADDLE DETAIL)

——SF—— – INDICATES SILT FENCING

50 0 50 100

HORIZONTAL SCALE: 1" = 50'
CONTOUR INTERVAL = 1'

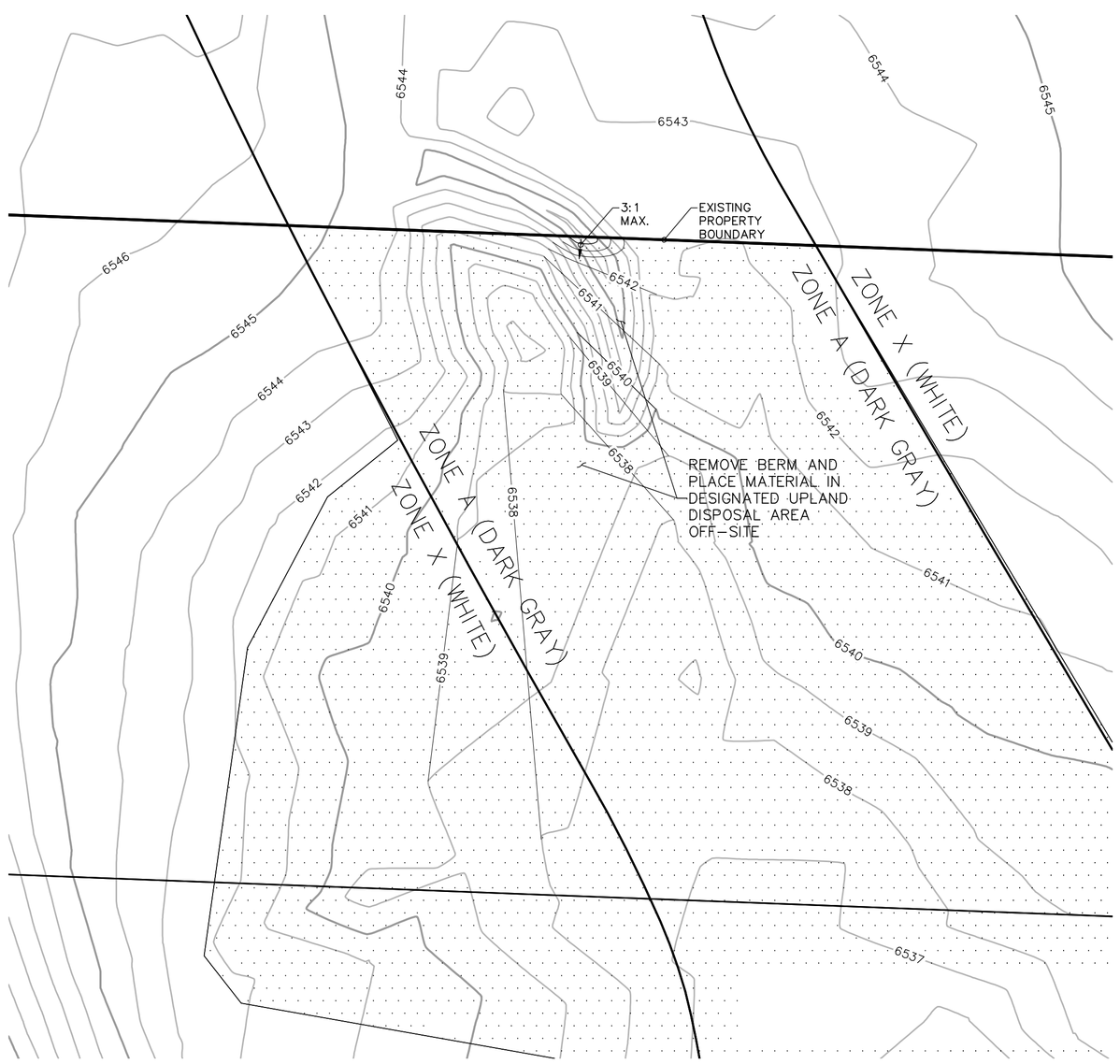

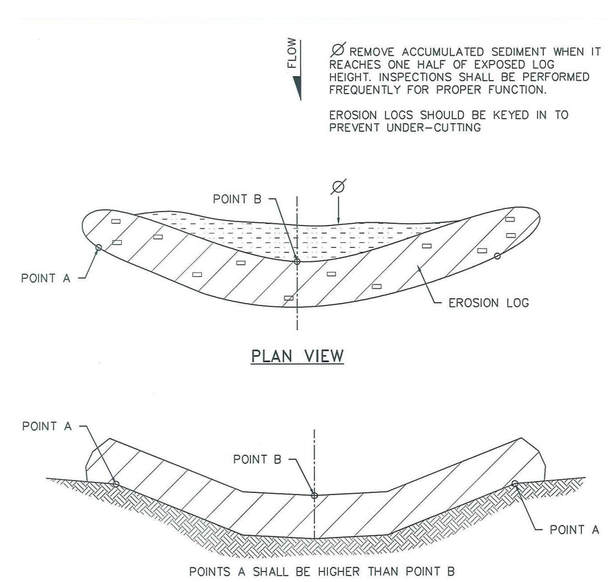

A 3-3 EROSION BARRIER (EB)

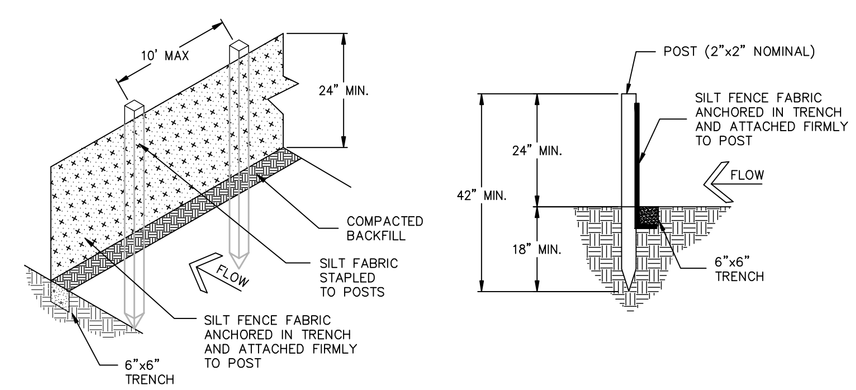

INSTALLATION REQUIREMENTS

1. SILT FENCES SHALL BE INSTALLED PRIOR TO ANY LAND DISTURBING ACTIVITIES.

2. WHEN JOINTS ARE NECESSARY, SILT FENCE GEOTEXTILE SHALL BE SPLICED TOGETHER ONLY AT SUPPORT POST AND SECURELY SEALED.

3. METAL POSTS SHALL BE "STUDDED TEE" OR "U" TYPE WITH MINIMUM WEIGHT OF 1.33 POUNDS PER LINEAR FOOT. WOOD POSTS SHALL HAVE A MINIMUM DIAMETER OR CROSS SECTION DIMENSION OF 2 INCHES.

4. THE FILTER MATERIAL SHALL BE FASTENED SECURELY TO METAL OR WOOD POSTS USING WIRE TIES, OR TO WOOD POSTS WITH 3/4" LONG #9 HEAVY-DUTY STAPLES. THE SILT FENCE GEOTEXTILE SHALL NOT BE STAPLED TO EXISTING TREES.

5. WHILE NOT REQUIRED, WIRE MESH FENCE MAY BE USED TO SUPPORT THE GEOTEXTILE. WIRE FENCE SHALL BE FASTENED SECURELY TO THE UPSLOPE SIDE OF THE POSTS USING HEAVY-DUTY WIRE STAPLES AT LEAST 3/4" LONG, TIE WIRES OR HOG RINGS. THE WIRE SHALL EXTEND INTO THE TRENCH A MINIMUM OF 6" AND SHALL NOT EXTEND MORE THAN 3' ABOVE THE ORIGINAL GROUND SURFACE.

6. ALONG THE TOE OF FILLS, INSTALL THE SILT FENCE ALONG A LEVEL CONTOUR AND PROVIDE AN AREA BEHIND THE FENCE FOR RUNOFF TO POND AND SEDIMENT TO SETTLE. A MINIMUM DISTANCE OF 5 FEET FROM THE TOE OF THE FILL IS RECOMMENDED.

7. THE HEIGHT OF THE SILT FENCE FROM THE GROUND SURFACE SHALL BE MINIMUM OF 24 INCHES AND SHALL NOT EXCEED 36 INCHES; HIGHER FENCES MAY INPOUND VOLUMES OF WATER SUFFICIENT TO CAUSE FAILURE OF THE STRUCTURE.

MAINTENANCE REQUIREMENTS

1. CONTRACTOR SHALL INSPECT SILT FENCES IMMEDIATELY AFTER EACH RAINFALL, AT LEAST DAILY DURING PROLONGED RAINFALL, AND WEEKLY DURING PERIODS OF NO RAINFALL. DAMAGED, COLLAPSED, UNENTRENCHED OR INEFFECTIVE SILT FENCES SHALL BE PROMPTLY REPAIRED OR REPLACED.

2. SEDIMENT SHALL BE REMOVED FROM BEHIND SILT FENCE WHEN IT ACCUMULATES TO HALF THE EXPOSED GEOTEXTILE HEIGHT.

3. SILT FENCES SHALL BE REMOVED WHEN ADEQUATE VEGETATIVE COVER IS ATTAINED AS APPROVED BY THE CITY.

B 3-3 SILT FENCE DETAIL (SF)

LDC/EC-1

N.T.S.

OWNER:
TKB PROPERTIES, LLC
ATTN: TOM DALY
6364 MIGHTY FLOTILLA AVENUE
LAS VEGAS, NV 89139-6409

COUNTY FILE NO: -

REVISIONS

No.	Description	By	Date
1	COUNTY COMMENTS BERM REMOVAL		09-25-10

H Scale: 1"=50'
V Scale: N/A
Designed By: DCE
Drawn By: KLW
Checked By: DCE
Date: 3/25/10

Land Development Consultants, Inc.
Planning · Landscape Architecture
Engineering · Surveying
www.ldc-inc.com · TEL: (719) 528-6133 · FAX: (719) 528-6848
2880 Serendipity Circle West · Colorado Springs, CO 80917

MOUNTAIN'S EDGE

STORMWATER MANAGEMENT PLAN (SWMP)
EL PASO COUNTY, CO

Project No.: 08019

Sheet: 3 of 3

STORMWATER MANAGEMENT PLAN FOR MOUNTAIN'S EDGE

January 20, 2011

Prepared for:

TKB Properties, LLC
6364 Mighty Flotilla Avenue
Las Vegas, NV 89139-6409

Prepared by:
Land Development Consultants, Inc
3898 Maizeland Road
Colorado Springs CO 80909
719-528-6133

Project # 08019

STORMWATER MANAGEMENT PLAN

To: Site Inspector Responsible For All Colorado Department of Public Health and Environment (CDPHE) and El Paso County Requirements

The following Stormwater Management Plan (SWMP) is a required item under the Construction Stormwater Discharge Permit. The primary goal for a SWMP is to improve water quality by reducing pollutants in stormwater discharges.

Construction dewatering is a separate issue, and must be covered by the CDPHE Water Quality Control Division's general permit for construction dewatering (regardless of the size of the construction project). Stormwater that mixes with groundwater in an excavation is subject to the controls in the construction dewatering permit.

It is assumed that the SWMP will be completed and implemented at the time the project breaks ground, and will be revised if necessary as construction proceeds. This document must be kept at the construction site at all times and made available to the public, El Paso County personnel and any representative of the CDPHE – Water Quality Control Division, if requested.

The inspection checklist (Appendix IV) should be used as a guideline for the inspection log of permanent and temporary control devices. Items to be inspected are not limited to those listed. The inspections should be made at least every 14 days and after any precipitation or snowmelt event that causes surface erosion. Inspections should also be made at the beginning and end of construction activities. An inspection log should be kept with the SWMP.

The conditions of the SWMP and General Permit for Stormwater Discharges Associated with Construction Activity will remain in effect until Final Stabilization is achieved and a notice of inactivation is sent to CDPHE Water Quality Control Division. All pertinent records must be kept on file for at least three (3) years from the date the site is finally stabilized.

Reference: CDPHE SWMP Guidance: www.cdphe.state.co.us/wq/PermitsUnit/
City of Colorado Springs Drainage Criteria Manual Volume 2

STORMWATER MANAGEMENT PLAN (SWMP)
MOUNTAIN'S EDGE

TABLE OF CONTENTS

APPENDICES

STORMWATER MANAGEMENT PLAN (SWMP)
MOUNTAIN'S EDGE

SITE DESCRIPTION

DESCRIPTION OF CONSTRUCTION ACTIVITY

Mountain's Edge is a 39.23-acre site zoned as Rural Residential 5-ac Lots (RR-5). The site is located in the North one-half of the North one-half of the Southwest One-Quarter of Section 13, Township 12 South, Range 63 West of the Sixth Principal Meridian in the County of El Paso, State of Colorado. Mountain's Edge is bounded to the north, east and south by single-family, multi-acre rural housing and to the west by McClelland Road, a gravel county road, beyond which to the west is more single-family, multi-acre rural housing. The 5-ac single family residential development will require rough grading, final grading, utility installation, road construction, and excavation.

PROPOSED SEQUENCE FOR MAJOR CONSTRUCTION ACTIVITIES

1. Clearing and grubbing necessary for perimeter controls.

2. Install perimeter controls, including silt fence around the site at down slope locations of disturbed soil and around down slope areas of any designated stockpile area. Silt fence to be maintained during entire construction sequence.

3. Notify El Paso County for initial inspection.

4. Complete remaining clearing and grubbing. Install stormwater culverts. Install additional BMPs, as outlined in the SWMP.

5. Rough grading site. Install additional BMPs, as outlined in the SWMP.

6. Final grading of site.

7. Removal of temporary BMPs. On-site stabilization to reduce erosion of disturbed soil.

8. Achieve Final Stabilization, as outlined in SWMP. Send inactivation notice to CDPHE.

AREAS OF DISTURBANCE

2.72 acres of the proposed 39.23-acre site will undergo clearing, excavation and grading.

SITE RUNOFF CHARACTERISTICS

The site runoff coefficients are:

	Minor Storm	Major Storm
Historic (Existing) conditions	0.25	0.35
Roofs, sidewalks, and pavement areas	0.90	0.95
Landscaped and undeveloped areas	0.25	0.35

Currently the site is undeveloped and consists of two southeast trending drainages separated by a ridge. Surficial slopes range from 1% to 6% with the most southeasterly ridge sloping east from 5% to 11%. A 'Geology and Soils Study' was prepared for this site by Kumar and Associates, dated November 14, 2008. Their soils analysis identified five soils unit types on site, predominately sandy loams with an SCS 'B' grouping and some loamy sand on the ridge tops with an SCS 'A' grouping. The average annual precipitation is about 15 inches. Mountain's Edge is situated within the Upper Bracket Creek Drainage Basin. Flows from two off-site basins enter this site from the north, continue unimpeded through the site, exit the south boundary and join at a point just north of Scott Road.

EXISTING VEGETATION DESCRIPTION

Existing vegetation on the property consists of sparse grass, weeds and cactus. The existing vegetative ground cover is approximately 75% for the entire site. This will service as a basis for determining final stabilization at the conclusion of the project. Photographs of existing vegetative ground cover may also be used to verify existing conditions.

POTENTIAL POLLUTION SOURCES

Construction activities that will take place at the site may have an impact on the stormwater quality. These include, but not limited to, all disturbed and stored soils, management of contaminated soils, loading and unloading operations, outdoor storage activities (building materials, fertilizers, chemicals, etc.), portable toilets, fueling depots, materials storage and vehicle maintenance. The location of any of these activities that are not included on the initial site should be added along with a description of the measures used to prevent the discharge of these materials from the site.

ANTICIPATED NON-STORMWATER DISCHARGES

Non-stormwater discharges are caused by activities other than direct runoff from precipitation events. These activities include, but are not limited to, natural springs, utility construction dewatering. Also, some discharges, such as construction dewatering, may require additional permits. Any non-stormwater discharges that are not included on

the initial site map should be added along with a description of the measures used to handle it.

There are not any anticipated non-stormwater discharges known at this time.

RECEIVING WATERS DESCRIPTION

Discharge from this site flows into two unnamed tributaries of Bracket Creek. The ultimate receiving water is Bracket Creek.

BEST MANAGEMENT PRACTICES (BMPs) FOR STORMWATER POLLUTION PREVENTION

Installation of BMPs are staged in order to minimize the potential for pollutants in the stormwater discharge. Three stages will be used as follows: establishment of perimeter controls, installation of temporary BMPs, and revegetation of non-developed surfaces. Descriptions of some of the available BMPs are listed below.

Only clearing and grubbing necessary for the installation of perimeter controls should be employed in the first stage of temporary BMPs installation. Perimeter silt fence and stormwater culvert outlet controls should then be installed as shown on the SWMP Site Map. At this time, El Paso County should be notified to schedule and initial inspection. No other land disturbing activity should occur until the initial inspection is complete.

The second stage of temporary BMPs installation will be installed after remaining clearing and grubbing, installation of stormwater culverts and rough grading have been completed. Per the SWMP Site Map, check dams will be installed in the roadside ditches. Other controls would include any silt fence within the site, such as on the downhill side of stockpile location, at the top and toe of steep slopes and in other areas deemed necessary by the person responsible for inspection and maintenance. Also, temporary swales, temporary seeding and surface roughing may be used as needed to control erosion. If controls are added or removed, the SWMP Site Map should be updated accordingly.

The third stage is revegetation of non-developed surfaces. A separate plan will detail the construction requirements of the gravel road. Upon completion of all grading activities, all disturbed areas not sodded or developed will be reseeded with a native seed mix and watered until a mature stand is established. At this point, the person responsible for inspection and maintenance can begin to address requirements for final stabilization.

EROSION AND SEDIMENT CONTROLS

Erosion control measures shall be implemented in a manner that will protect properties and public facilities from the adverse effects of erosion and sedimentation as a result of

construction and earthwork activities. The following practices are to be implemented for this site. Erosion control construction details are included in Appendix III.

Structural Practices

In areas of sheet flow running off-site and at the top and bottom of steep slopes, silt fence may be used to trap sediment. Silt fence should be placed on the contour and in areas where the tributary areas are less than one-quarter acre per 100' of silt fence. Erosion barrier ditch and outlet protection will help to eliminate suspended particles and reduce sediment from entering the drainage channels. Temporary drainage swales can be used to divert water as needed. Slopes on temporary drainage swales should not exceed 1%. Sediment and debris that have been tracked off-site should be removed daily by shoveling and/or sweeping.

Non-structural Practices

Surface roughening can be used to reduce the amount of runoff from a given area. Temporary seeding can be used to provide protective cover in areas that will remain in an interim state from 60 days to a year. Erosion control mats can be used to quickly establish vegetation and prevent erosion on steep slopes and open channels. All disturbed areas not sodded or developed will be reseeded with a native seed mix and watered until a mature stand is established.

MATERIALS HANDLING AND SPILL PREVENTION

Any substance with potential to contaminate either the ground surface or the ground water shall be cleaned up immediately after the discovery or contained until appropriate cleanup methods can be employed. Manufacturer's recommended methods for spill cleanup shall be followed, along with proper disposal methods. Any discharge of hazardous material must be handled in accordance with the Divisions Notifications Requirement, see Part II.A.3.of the permit (a CDPS general permit copy may be found at http://www.cdphe.state.co.us/wq/PermitsUnit/PERMITs/SWpermitsrats/SWConstructionPermit.pdf).

FINAL STABILIZATION AND LONG-TERM STORMWATER MANAGEMENT

Final Stabilization is reached when all soil-disturbing activities at the site have been completed, and uniform vegetative cover has been established with a density of at least 70% of pre-disturbance levels or equivalent permanent, physical erosion reduction methods have been employed. The CDPHE Water Quality Control Division may, after consultation with the permittee and upon good cause, amend the final stabilization criteria for specific operations. At this time, El Paso County should be notified to schedule a final inspection. The conditions of the SWMP and General Permit for

Stormwater Discharges Associated with Construction Activity will remain in effect until Final Stabilization is achieved and a notice of inactivation is sent by the applicant to CDPHE Water Quality Control Division. All pertinent records must be kept on file for at least three (3) years from the date the site is finally stabilized.

OTHER CONTROLS

All waste and debris created by construction activities at the site or removed therefrom for disposal shall be disposed of in compliance with all laws, regulations and ordinances of the federal, state and local agencies.

INSPECTION AND MAINTENANCE

In El Paso County, inspection of stormwater quality controls must be performed by a CDOT Erosion Control Supervisor (ECS) or a Colorado registered Professional Engineer. El Paso County must be contacted prior to scheduling initial and final inspection. The person responsible for inspection and maintenance must also perform inspections at least every 14 days and after each significant rainfall event. Federal, state and local entities may also perform their own inspections. The person responsible for inspections and maintenance must follow any recommendations given in inspection report within seven (7) days. Also, a copy of the SWMP and inspection log must be kept on site at all times.

Inspections should include, at a minimum, identification of all on-site equipment, condition of all BMPs, dates that BMPs were removed, replaced and repaired since the last inspection and any maintenance performed on the BMPs and equipment. The areas of the site most likely to require maintenance or repair include access points, low points in perimeter controls, sediment ponds and spill containment areas. Any spills or failures of the erosion controls should be repaired immediately, noted on the inspection records and reviewed for how to prevent future occurrences.

It is recommended that the person responsible for inspection and maintenance use the blank inspection records found in Appendix V as a place to records each inspection performed. Appendix IV can be copied if needed. Each inspection records should be signed and dated. Copies of all other pertinent information should also be stored here for quick reference. All inspection records are to be kept wit the SWPMP for a period of no less than three (3) year after final stabilization.

Maintenance requirements for each BMP used can be found in Appendix III. It is important that all BMPs are maintained to prevent failure to the BMPs. Maintenance of equipment and facilities that have the ability to cause a spill should be performed on a regular basis and in a manner that would prevent discharge of pollutants to storm sewers and surface waters.

SWMP ADMINISTRATOR

As required by Part I.C.3 of the permit, "the SWMP shall identify a specific individual(s), position or title who is responsible for developing, implementing, maintaining, and revising the SWMP." The SWMP Administrator is the contact for all SWMP-related issues and is the person responsible for its accuracy, completeness, and implementation. Therefore, the SWMP Administrator should be a person with authority to adequately manage and direct day-to-day stormwater quality management activities at the site. The SWMP Administrator will be a designated representative of the property owner(s), hired as a contractor to perform this function. The property owner(s) signing the permit have legal authority for permit-related activities.

PREPARED BY:

LDC, Inc.

Anna C. Sparks, P.E.
Director of Engineering

APPENDIX I

STATE OF COLORADO GENERAL PERMIT APPLICATION
FOR
STORMWATER DISCHARGES ASSOCIATED WITH
CONSTRUCTION ACTIVITIES

STATE OF COLORADO

De 1 to protecting and improving the health and environment of the people of Colorado
43. ..ny Creek Dr. S.
Denver, Colorado 80246-1530
Phone (303) 692-2000
TDD Line (303) 691-7700
Located in Glendale, Colorado
http://www.cdphe.state.co.us

Colorado Department of Public Health and Environment

For Agency Use Only
Permit Number Assigned
COR03-_____
Date Received ____/____/____ Month Day Year

STORMWATER DISCHARGE ASSOCIATED WITH CONSTRUCTION ACTIVITIES APPLICATION
PHOTO COPIES, FAXED COPIES, PDF COPIES OR EMAILS WILL NOT BE ACCEPTED.

Please print or type. Original signatures are required. This application must be considered complete by the Division before it will initiate permit processing. The Division will notify the applicant if additional information is needed to complete the application. If more space is required to answer any question, please attach additional sheets to the application form. Applications must be mailed or delivered to:

Colorado Department of Public Health and Environment
Water Quality Control Division
4300 Cherry Creek Drive South
WQCD-P-B2
Denver, Colorado 80246-1530

PERMIT INFORMATION

Applicant is: ■ Property Owner □ Contractor/Operator

1. CONTACT INFORMATION

Permit Applicant

Company Name: TKB PROPERTIES, LLC

Legally Responsible Person: First Name: THOMAS Last Name: DALY

Title: OWNER

See description of legal contact item 9, page 3

Mailing Address: 6364 MIGHTY FLOTILLA AVENUE

City, State and Zip Code: LAS VEGAS, NV 89139-6409

Phone: 702-897-6793

Email Address: tomdaly@cox.net

Local Facility Contact ☐ Same as Applicant

Local Contact Person: First Name: Anna Last Name: Sparks, P.E.

Title: Director of Engineering for Land Development Consultants, Inc.

Phone: 719-528-6133

Email Address: asparks@ldc-inc.com

Billing Contact ☑ Same as Applicant

Company Name:

Billing Contact Person: First Name: Last Name:

Title:

Mailing Address:

City, State and Zip Code:

Phone:

Email Address:

1. CONTACT INFORMATION - CONTINUED

Assignment Of Authorized Agent(S)—Regulation 61 [61.4(1)] NOT REQUIRED

In accordance with Regulation 61, all reports required by permits and other information requested by the Division shall be igned by a person described in section 61.4(1)(e) or by a duly authorized representative of that person. A person is a duly authorized representative only if:

i. The authorization is made in writing by a person described in paragraph 61.4(1)(e);
ii. The authorization specifies either an individual or a position having responsibility for the overall operation of the regulated facility or activity such as the position of plant manager, operator of a well or a well field, superintendent, position of equivalent responsibility, or an individual or position having overall responsibility for environmental matters for the company. (A duly authorized representative may thus be either a **named individual** or any individual occupying a **named position**); and,
iii. The written authorization is submitted to the Division.

Duly Authorized Representative information provided below? □ NO ■ YES

Authorized individual: Thomas Daly Email address: tomdaly@cox.net

Title: Owner Telephone No: 702-897-6793

Authorized position: _____ Email address: _____

Position currently held by: _____ Telephone No: _____

2. PERMITTED FACILITY INFORMATION

Name of Plan, Project or Development: Mountain's Edge

Location of construction site:

Street Address (or cross streets): Farmhouse Court (off of McClelland Road, south of U.S. Hwy 24)

City (if unincorporated, so indicate): Calhan County: El Paso

State and Zip Code: CO 80808

Latitude and Longitude (approximate center of site to nearest 15 seconds using one of following formats):

Latitude: _____ degrees /minutes/ seconds Longitude: _____ degrees/ minutes/ seconds (e.g., 39°42'11", 104°55'57")

OR

Latitude: 39.003 degrees (to 3 decimal places) Longitude: -104.348 degrees (to 3 decimal places) (e.g., 39.703°, 104.933')

3. MAP (Attachment)

Map: Attach a map that indicates the site location and that CLEARLY shows the boundaries of the area that will be disturbed. Maps must be **no larger** than 11x17 inches.

4. LEGAL DESCRIPTION

Legal description: If subdivided, provide the legal description below, or indicate that it is not applicable (**do not** supply Township/Range/Section or metes and bounds description of site)

Subdivision(s): Mountain's Edge Lot(s): _____ Block(s): _____

OR

□ Not applicable (site has not been subdivided)

5. AREA OF CONSTRUCTION SITE

Total area of project site (acres): 39.23

Area of project site to undergo disturbance (acres): 2.72

Total disturbed area of Larger Common Plan of Development or Sale, if applicable: _____
(i.e., total, including all phases, filings, lots, and infrastructure not covered by this application)

6. NATURE OF CONSTRUCTION ACTIVITY

Check the appropriate box(s) or provide a brief description that indicates the general nature of the construction activities. (The full description of activities must be included in the Stormwater Management Plan.)

- ■ Single Family Residential Development
- □ Multi-Family Residential Development
- □ Commercial Development
- □ Oil and Gas Production and/or Exploration (including pad sites and associated infrastructure)
- □ Highway/Road Development (not including roadways associated with commercial or residential development)
- □ Other, Describe: _____

7. ANTICIPATED CONSTRUCTION SCHEDULE

Construction Start Date: 02-07-2011 Final Stabilization Date: 10-07-2011

8. RECEIVING WATERS (If discharge is to a ditch or storm sewer, include the name of the ultimate receiving waters)

Immediate Receiving Water(s): ditch

Ultimate Receiving Water(s): Upper Bracket Creek

9. REQUIRED SIGNATURES (Both parts i. and ii. must be signed)

Signature of Applicant: The applicant must be either the owner and/or operator of the construction site. Refer to Part B of the instructions for additional information. The application must be signed by the applicant to be considered complete. In all cases, it shall be signed as follows: (Regulation 61.4 (1ei)

a) In the case of corporations, by the responsible corporate officer is responsible for the overall operation of the facility from which the discharge described in the form originates
b) In the case of a partnership, by a general partner.
c) In the case of a sole proprietorship, by the proprietor.
d) In the case of a municipal, state, or other public facility, by either a principal executive officer, ranking elected official, (a principal executive officer has responsibility for the overall operation of the facility from which the discharge originates).

STOP!: A Stormwater Management Plan must be completed prior to signing the following certifications!

i. Stormwater Management Plan Certification

"I certify under penalty of law that a complete Stormwater Management Plan, as described in Appendix A of this application, has been prepared for my activity. Based on my inquiry of the person or persons who manage the system, or those persons directly responsible for gathering the information, the Stormwater Management Plan is, to the best of my knowledge and belief, true, accurate, and complete. I am aware that there are significant penalties for falsely certifying the completion of said SWMP, including the possibility of fine and imprisonment for knowing violations."

Signature of Legally Responsible Person or Authorized Agent (submission must include original signature) — Date Signed: 2-16-2011

Name (printed): Thomas M. DALY — Title: owner

ii. Signature of Permit Legal Contact

"I certify under penalty of law that I have personally examined and am familiar with the information submitted in this application and all attachments and that, based on my inquiry of those individuals immediately responsible for obtaining the information, I believe that the information is true, accurate and complete. I am aware that there are significant penalties for submitting false information, including the possibility of fine or imprisonment.

"I understand that submittal of this application is for coverage under the State of Colorado General Permit for Stormwater Discharges Associated with Construction Activity **for the entirety of the construction site/project described and applied for, until such time as the application is amended or the certification is transferred, inactivated, or expired.**"

Signature of Legally Responsible Person (submission must include original signature) — Date Signed: 2-16-2011

Name (printed): Thomas M. DALY — Title: owner

DO NOT INCLUDE A COPY OF THE STORMWATER MANAGEMENT PLAN

DO NOT INCLUDE PAYMENT – AN INVOICE WILL BE SENT AFTER THE CERTIFICATION IS ISSUED.

APPENDIX II

VICINITY MAP

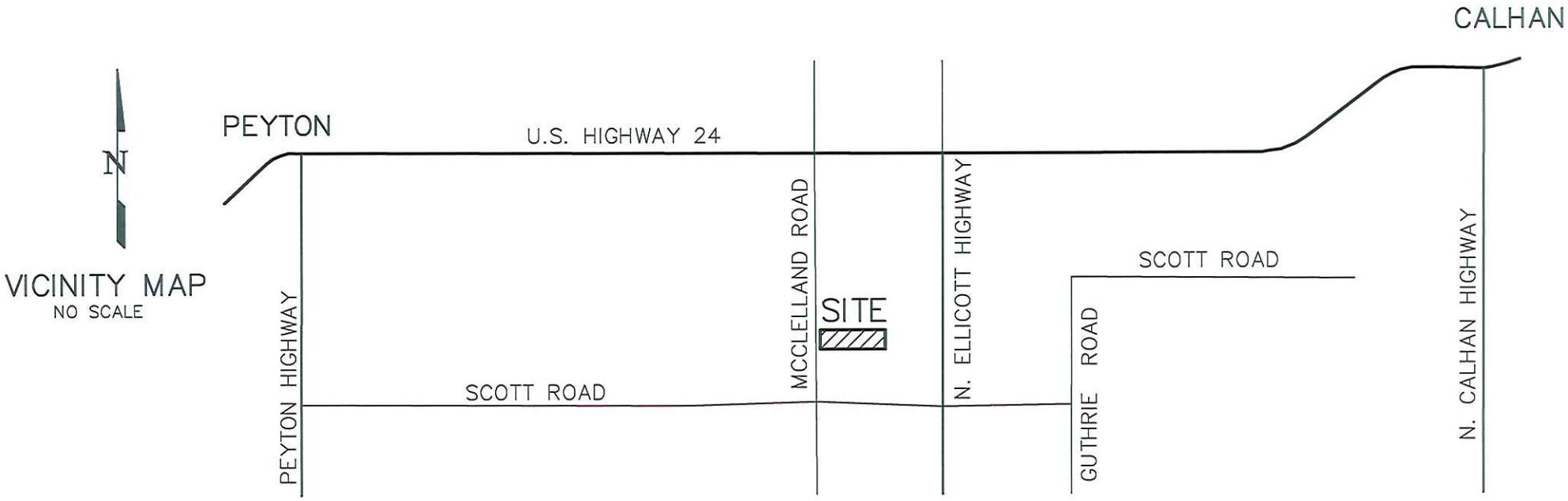

VICINITY MAP
NO SCALE

APPENDIX III

EROSION CONSTRUCTION DETAILS

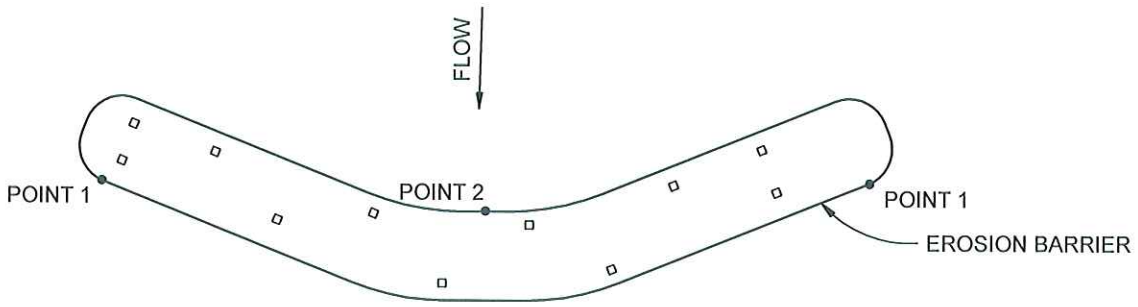

PLAN VIEW

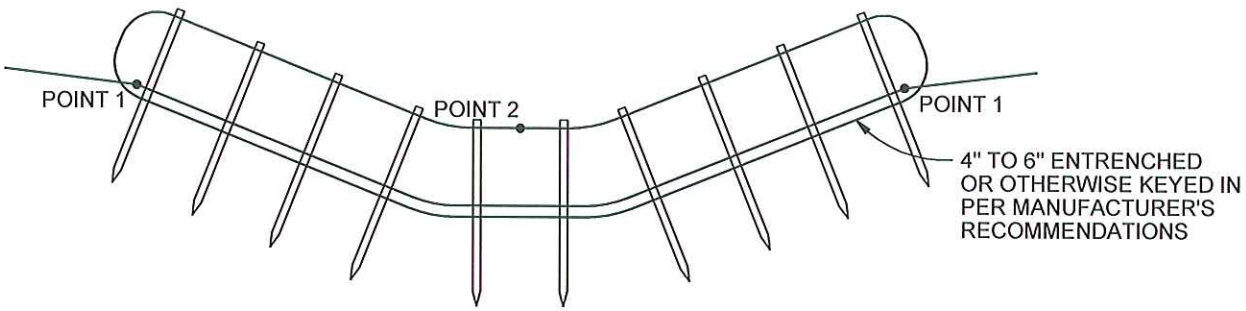

POINTS 1 SHALL BE HIGHER THAN POINT 2.

ELEVATION

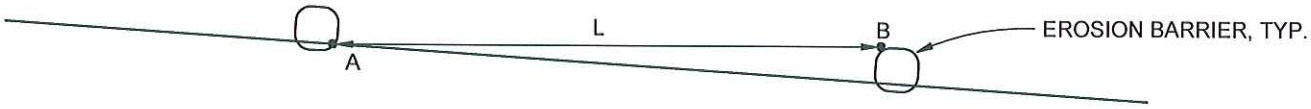

L= THE DISTANCE SUCH THAT POINTS A AND B ARE AT THE SAME ELEVATION.

SPACING

INSTALLATION REQUIREMENTS

1. EROSION BARRIERS SHOULD BE KEYED IN TO PREVENT UNDER–CUTTING.

2. BARRIERS SHALL BE TIGHTLY ABUTTED WITH NO GAPS.

3. BARRIERS ARE TO EXTEND UPSLOPE SO THE TRAPPED RUNOFF CANNOT FLOW AROUND THE ENDS OF THE BARRIER.

MAINTENANCE REQUIREMENTS

1. REGULAR INSPECTIONS ARE TO BE MADE OF ALL BARRIERS, ESPECIALLY AFTER STORM EVENTS PRODUCING RUNOFF.

2. ACCUMULATED SEDIMENT AND DEBRIS IS TO BE REMOVED FROM BEHIND THE BARRIER WHEN 1/2 OF THE ORIGINAL HEIGHT OF THE DAM IS REACHED. UNENTRENCHED BARRIERS NEED TO BE REPAIRED WITH COMPACTED BACKFILL MATERIAL.

3. WHEN BARRIERS ARE REMOVED THE CHANNEL LINING OR VEGETATION IS TO BE RESTORED.

A
3-3

EROSION BARRIER (EB)

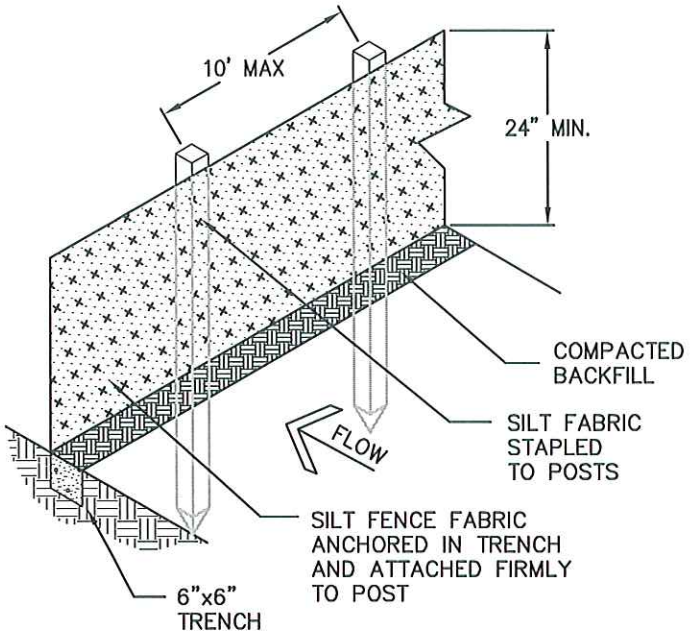

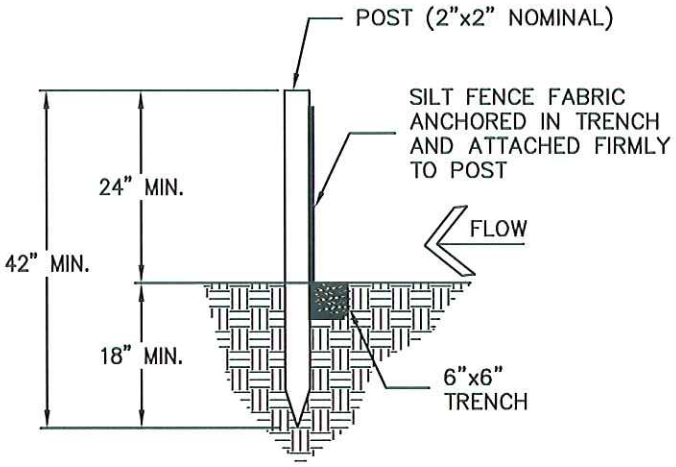

INSTALLATION REQUIREMENTS

1. SILT FENCES SHALL BE INSTALLED PRIOR TO ANY LAND DISTURBING ACTIVITIES.

2. WHEN JOINTS ARE NECESSARY, SILT FENCE GEOTEXTILE SHALL BE SPLICED TOGETHER ONLY AT SUPPORT POST AND SECURELY SEALED.

3. METAL POSTS SHALL BE "STUDDED TEE" OR "U" TYPE WITH MINIMUM WEIGHT OF 1.33 POUNDS PER LINEAR FOOT. WOOD POSTS SHALL HAVE A MINIMUM DIAMETER OR CROSS SECTION DIMENSION OF 2 INCHES.

4. THE FILTER MATERIAL SHALL BE FASTENED SECURELY TO METAL OR WOOD POSTS USING WIRE TIES, OR TO WOOD POSTS WITH 3/4" LONG #9 HEAVY-DUTY STAPLES. THE SILT FENCE GEOTEXTILE SHALL NOT BE STAPLED TO EXISTING TREES.

5. WHILE NOT REQUIRED, WIRE MESH FENCE MAY BE USED TO SUPPORT THE GEOTEXTILE. WIRE FENCE SHALL BE FASTENED SECURELY TO THE UPSLOPE SIDE OF THE POSTS USING HEAVY-DUTY WIRE STAPLES AT LEAST 3/4" LONG, TIE WIRES OR HOG RINGS. THE WIRE SHALL EXTEND INTO THE TRENCH A MINIMUM OF 6" AND SHALL NOT EXTEND MORE THAN 3' ABOVE THE ORIGINAL GROUND SURFACE.

6. ALONG THE TOE OF FILLS, INSTALL THE SILT FENCE ALONG A LEVEL CONTOUR AND PROVIDE AN AREA BEHIND THE FENCE FOR RUNOFF TO POND AND SEDIMENT TO SETTLE. A MINIMUM DISTANCE OF 5 FEET FROM THE TOE OF THE FILL IS RECOMMENDED.

7. THE HEIGHT OF THE SILT FENCE FROM THE GROUND SURFACE SHALL BE MINIMUM OF 24 INCHES AND SHALL NOT EXCEED 36 INCHES; HIGHER FENCES MAY INPOUND VOLUMES OF WATER SUFFICIENT TO CAUSE FAILURE OF THE STRUCTURE.

MAINTENANCE REQUIREMENTS

1. CONTRACTOR SHALL INSPECT SILT FENCES IMMEDIATELY AFTER EACH RAINFALL, AT LEAST DAILY DURING PROLONGED RAINFALL, AND WEEKLY DURING PERIODS OF NO RAINFALL. DAMAGED, COLLAPSED, UNENTRENCHED OR INEFFECTIVE SILT FENCES SHALL BE PROMPTLY REPAIRED OR REPLACED.

2. SEDIMENT SHALL BE REMOVED FROM BEHIND SILT FENCE WHEN IT ACCUMULATES TO HALF THE EXPOSED GEOTEXTILE HEIGHT.

3. SILT FENCES SHALL BE REMOVED WHEN ADEQUATE VEGETATIVE COVER IS ATTAINED AS APPROVED BY THE CITY.

SILT FENCE DETAIL (SF)

B

3

LDC/EC-1

N.T.S.

APPENDIX IV

SAMPLE INSPECTION RECORD

(INSPECTION CHECKLIST)

Land Development Consultants, Inc.

3898 Maizeland Road
Colorado Springs, CO 80909

Phone: 719-528-6133
Fax: 719-528-6848

Surveying • Planning • Engineering • Landscape Architecture

www.ldc-inc.com

INSPECTION RECORD

Project Name:_____ Project No._____
Inspection Date:_____ Time:_____ Inspected by: _____

STAGE OF CONSTRUCTION

___ Pre-Construction
___ Clearing and Grubbing
___ Rough Grading
___ Building Construction
___ Finish Grading
___ Final Stabilization

==========

INSPECTION CHECKLIST

Yes No NA

☐ ☐ ☐ Are all BMPs present as shown on site map in SWMP? If the BMPs onsite do not match those on SWMP site map, revise.
☐ ☐ ☐ Is there any evidence of sediment leaving the construction site? If so, note the areas in comments below.
☐ ☐ ☐ Have all denuded areas requiring temporary or permanent stabilization been stabilized?
Seeded? yes/no Mulched? yes/no Graveled? yes/no
☐ ☐ ☐ Are soil stock piles adequately stabilized with seeding and/or sediment trapping measures?
☐ ☐ ☐ Does permanent vegetation provide adequate stabilization?
☐ ☐ Have sediment trapping facilities been constructed as a first step in LDA?
☐ ☐ ☐ For perimeter sediment trapping measures, are earthen structures stabilized?
☐ ☐ ☐ Are sediment basins installed where needed?
☐ ☐ ☐ Are finished cut and fill slopes adequately stabilized?
☐ ☐ ☐ Are on-site channels and outlets adequately stabilized?
☐ ☐ ☐ Do all operational storm sewer inlets have adequate inlet protection?
☐ ☐ ☐ Are stormwater conveyance channels adequately stabilized with channel lining and/or outlet protection?
☐ ☐ ☐ Is in-stream construction conducted using measures to minimize channel damage?
☐ ☐ ☐ Are temporary stream crossings of non-erodible material installed where applicable?
☐ ☐ ☐ Is necessary restabilization of in-stream construction complete?
☐ ☐ ☐ Are utility trenches stabilized properly?
☐ ☐ ☐ Are soil and mud kept off public roadways at intersections with site access roads?
☐ ☐ ☐ Have all temporary control structures that are no longer needed been removed?
☐ ☐ ☐ Have all control structure repairs and sediment removal been performed?
☐ ☐ ☐ Do properties and waterways downstream from development appear to be adequately protected from erosion and sediment deposition due to increases in peak stormwater runoff?
☐ ☐ ☐ Is there any evidence of discharges or spills of fuels, lubricants, chemicals or other items of concern?
☐ ☐ ☐ Is there any evidence of sediment leaving the construction site? If so, note the areas in comments below.

KEY: NA = Not Applicable LDA = Land Disturbing Activity

==========

Comments:_____
_____
_____
_____

Verbal/Written notification given to: _____

Recorded by: _____ Date: _____

Sheet ___ of ___

Land Development Consultants, Inc.

3898 Maizeland Road
Colorado Springs, CO 80909

Phone: 719-528-6133
Fax: 719-528-6848

Surveying • Planning • Engineering • Landscape Architecture

www.ldc-inc.com

BMP MAINTENANCE CHECKLIST	PRACTICE USED	MAINTENCE REQUIRED		COMMENTS / REMARKS / ACTIONS NECESSARY
		YES	NO	
TEMPORARY SEEDING				
TEMPORARY SWALES				
CHECK DAM/STRAW BALE BARRIER				
DIVERSION				
DRAINAGE SWALE				
EROSION CONTROL BLANKET				
INLET PROTECTION				
OUTLET PROTECTION				
ROUGH CUT STREET CONTROL				
SEDIMENT BASIN				
SEEDING/MULCHING				
SILT FENCE				
SLOPE DRAIN				
SURFACE ROUGHENING				
VEHICLE TRACKING				
OTHER				

APPENDIX V

STORMWATER MANAGEMENT PLAN (SWMP)

OPERATION AND MAINTENANCE INSPECTION LOG

The inspection checklist in Appendix IV (or equivalent) is to be used at each stormwater management inspection per the requirements outlined in Inspection and Maintenance section of this SWMP, or as requested by federal, state and local entities. Also include copies of any inspection performed by federal, state and local entities. Corrective action should be taken no more than 7 days after a deficient inspection. As a result of these inspections, the SWMP may need to be revised (See Appendix VI). The inspection records and current SWMP shall be made available to the CDPHE Water Quality Division and El Paso County upon request.

For additional inspection records, the sample inspection record found in Appendix IV can be copied as needed.

Land Development Consultants, Inc.
3898 Maizeland Road
Colorado Springs, CO 80909
Phone: 719-528-6133
Fax: 719-528-6848
Surveying • Planning • Engineering • Landscape Architecture
www.ldc-inc.com

INSPECTION RECORD

Project Name:_____ Project No._____
Inspection Date:_____ Time:_____ Inspected by: _____

STAGE OF CONSTRUCTION

___ Pre-Construction ___ Rough Grading ___ Finish Grading
___ Clearing and Grubbing ___ Building Construction ___ Final Stabilization

==========

INSPECTION CHECKLIST

Yes No NA

☐ ☐ ☐ Are all BMPs present as shown on site map in SWMP? If the BMPs onsite do not match those on SWMP site map, revise.
☐ ☐ ☐ Is there any evidence of sediment leaving the construction site? If so, note the areas in comments below.
☐ ☐ ☐ Have all denuded areas requiring temporary or permanent stabilization been stabilized?
Seeded? yes/no Mulched? yes/no Graveled? yes/no
☐ ☐ ☐ Are soil stock piles adequately stabilized with seeding and/or sediment trapping measures?
☐ ☐ ☐ Does permanent vegetation provide adequate stabilization?
☐ ☐ ☐ Have sediment trapping facilities been constructed as a first step in LDA?
☐ ☐ For perimeter sediment trapping measures, are earthen structures stabilized?
☐ ☐ ☐ Are sediment basins installed where needed?
☐ ☐ ☐ Are finished cut and fill slopes adequately stabilized?
☐ ☐ ☐ Are on-site channels and outlets adequately stabilized?
☐ ☐ ☐ Do all operational storm sewer inlets have adequate inlet protection?
☐ ☐ ☐ Are stormwater conveyance channels adequately stabilized with channel lining and/or outlet protection?
☐ ☐ ☐ Is in-stream construction conducted using measures to minimize channel damage?
☐ ☐ ☐ Are temporary stream crossings of non-erodible material installed where applicable?
☐ ☐ ☐ Is necessary restabilization of in-stream construction complete?
☐ ☐ ☐ Are utility trenches stabilized properly?
☐ ☐ ☐ Are soil and mud kept off public roadways at intersections with site access roads?
☐ ☐ ☐ Have all temporary control structures that are no longer needed been removed?
☐ ☐ ☐ Have all control structure repairs and sediment removal been performed?
☐ ☐ ☐ Do properties and waterways downstream from development appear to be adequately protected from erosion and sediment deposition due to increases in peak stormwater runoff?
☐ ☐ ☐ Is there any evidence of discharges or spills of fuels, lubricants, chemicals or other items of concern?
☐ ☐ ☐ Is there any evidence of sediment leaving the construction site? If so, note the areas in comments below.

KEY: NA = Not Applicable LDA = Land Disturbing Activity

==========

Comments:_____
_____
_____
_____

Verbal/Written notification given to: _____

Recorded by: _____ Date: _____

Sheet ___ of ___

Land Development Consultants, Inc.
3898 Maizeland Road
Colorado Springs, CO 80909
Phone: 719-528-6133
Fax: 719-528-6848
Surveying • Planning • Engineering • Landscape Architecture
www.ldc-inc.com

BMP MAINTENANCE CHECKLIST	PRACTICE USED	MAINTENCE REQUIRED		COMMENTS / REMARKS / ACTIONS NECESSARY
		YES	NO	
TEMPORARY SEEDING				
TEMPORARY SWALES				
CHECK DAM/STRAW BALE BARRIER				
DIVERSION				
DRAINAGE SWALE				
EROSION CONTROL BLANKET				
INLET PROTECTION				
OUTLET PROTECTION				
ROUGH CUT STREET CONTROL				
SEDIMENT BASIN				
SEEDING/MULCHING				
SILT FENCE				
SLOPE DRAIN				
SURFACE ROUGHENING				
VEHICLE TRACKING				
OTHER				

Sheet ___ of ___

APPENDIX VI

EROSION & STORMWATER QUALITY CONTROL PLAN
AND
SWMP SITE MAP

An additional blank copy of this plan has been provided to allow for changes as needed.

The site map must reflect current site conditions at all times.