SITE PLAN **NOT TO SCALE**

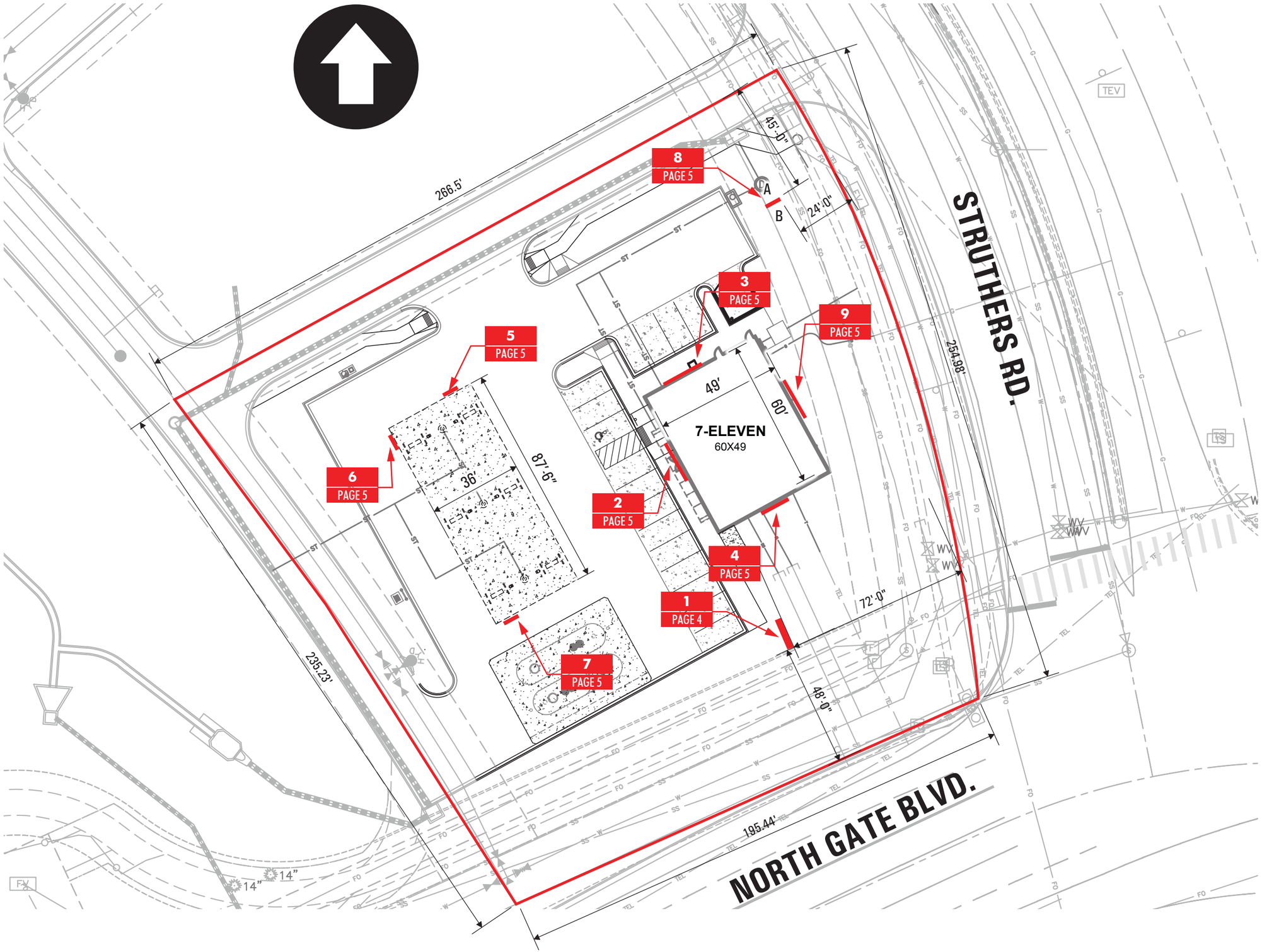

YESCO

Denver Region

Denver
11220 E. 53rd Avenue, Suite 300
Denver, CO 80239
303-375-9933

Colorado Springs
5011 List Drive
Colorado Springs, CO 80919
719-385-0103

This drawing was created to assist you in visualizing our proposal. The original ideas herein are the property of YESCO. Permission to copy or revise this drawing can only be obtained thru a written agreement with YESCO.

© 2017 YESCO LLC
All rights reserved

www.yesco.com

CLIENT:
711 #38107

ADDRESS:
229 GLENEAGLE GATE VIEW

CITY / STATE / ZIP:
EL PASO COUNTY, CO

ACCOUNT EXECUTIVE:
JOHN CURRAN

DESIGNER:
KEVIN LANGFORD

ORIGINAL DATE:
10.27.2017

CUSTOMER APPROVAL

Client Signature / Date

Landlord Signature / Date

ELECTRICAL NOTE

NOTE: UNLESS OTHERWISE NOTED, ELECTRICAL RUNS OR FINAL ELECTRICAL CONNECTION CHARGES ARE NOT INCLUDED. ILLUMINATED DISPLAYS WILL BE WIRED FOR **120 VOLT** POWER UNLESS OTHERWISE INDICATED.

IF VOLTAGE IS NOT 120 PLEASE INDICATE YOUR VOLTAGE HERE

- - - VOLTS - - - AMPS

UL NOTE

YESCO IS A UL LISTED SIGN MANUFACTURER

THIS SIGN IS INTENDED TO BE INSTALLED IN ACCORDANCE WITH THE REQUIREMENTS OF ARTICLE 600 OF THE NATIONAL ELECTRICAL CODE AND / OR OTHER APPLICABLE LOCAL CODES. THIS INCLUDES PROPER GROUNDING AND BONDING OF THE SIGN.

REVISIONS

	DATE	REVISION	DESIGNER
1	12.6.17	UPDATE SIGN LOCATION	KEVIN
2	3.9.18	UPDATE DIMENSIONS	KEVIN
3	3.20.18	change sign placment	kevin
4			
5			
6			
7			
8			
9			
10			
11			
12			
13			
14			
15			
16			

DESIGN NUMBER:
ART09347R3

SITE PLAN NOT TO SCALE

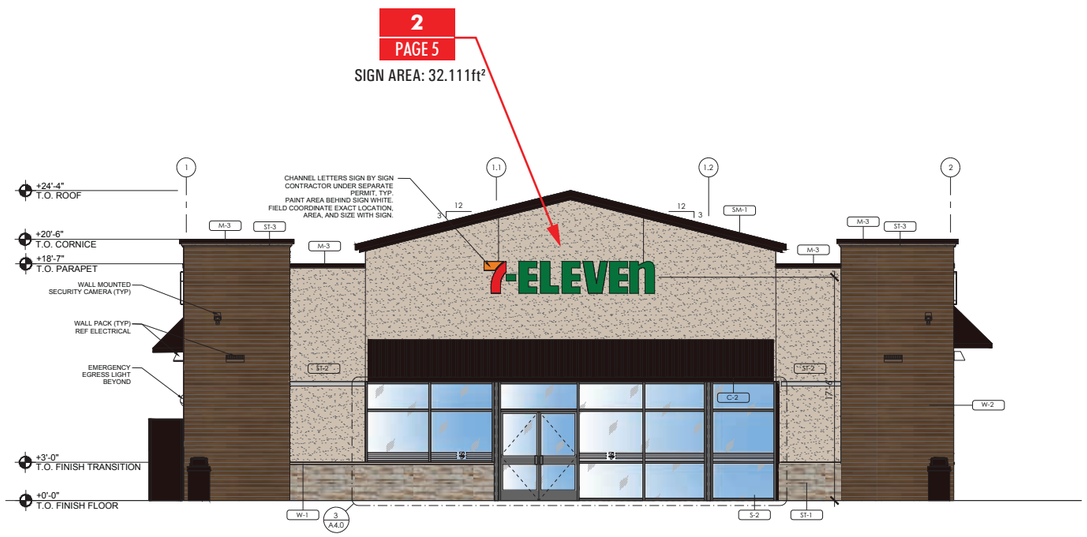

1 **WEST ELEVATION**
SCALE = NTS

2 **NORTH ELEVATION**
SCALE = NTS

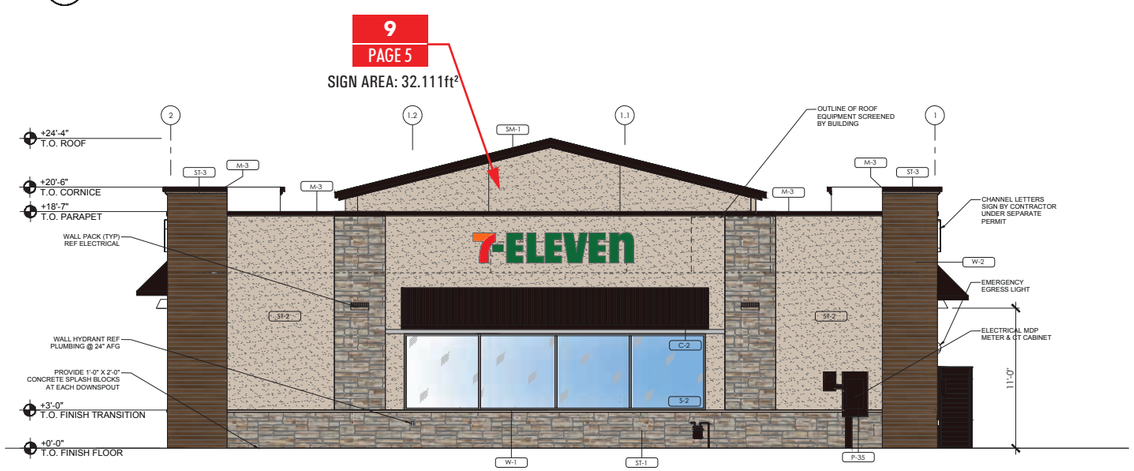

3 **EAST ELEVATION**
SCALE = NTS

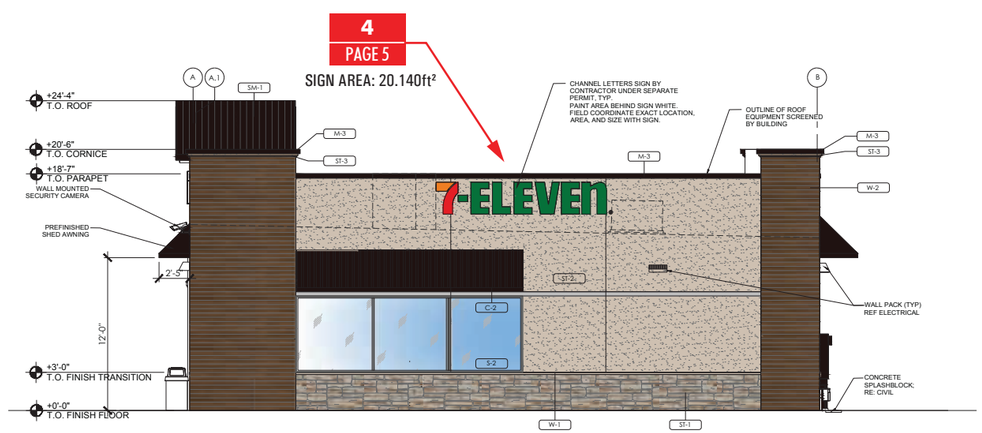

4 **SOUTH ELEVATION**
SCALE = NTS

YESCO®
Denver Region

Denver
11220 E. 53rd Avenue, Suite 300
Denver, CO 80239
303-375-9933

Colorado Springs
5011 List Drive
Colorado Springs, CO 80919
719-385-0103

This drawing was created to assist you in visualizing our proposal. The original ideas herein are the property of YESCO. Permission to copy or revise this drawing can only be obtained thru a written agreement with YESCO.

© 2017 YESCO LLC
All rights reserved

www.yesco.com

CLIENT: 711 #38107

ADDRESS: 229 GLENEAGLE GATE VIEW

CITY / STATE / ZIP: EL PASO COUNTY, CO

ACCOUNT EXECUTIVE: JOHN CURRAN

DESIGNER: KEVIN LANGFORD

ORIGINAL DATE: 10.27.2017

CUSTOMER APPROVAL

Client Signature / Date

Landlord Signature / Date

ELECTRICAL NOTE

NOTE: UNLESS OTHERWISE NOTED, ELECTRICAL RUNS OR FINAL ELECTRICAL CONNECTION CHARGES ARE NOT INCLUDED. ILLUMINATED DISPLAYS WILL BE WIRED FOR **120 VOLT** POWER UNLESS OTHERWISE INDICATED.

IF VOLTAGE IS NOT 120 PLEASE INDICATE YOUR VOLTAGE HERE

- - -	- - -
VOLTS	AMPS

UL NOTE

YESCO IS A UL LISTED SIGN MANUFACTURER

THIS SIGN IS INTENDED TO BE INSTALLED IN ACCORDANCE WITH THE REQUIREMENTS OF ARTICLE 600 OF THE NATIONAL ELECTRICAL CODE AND / OR OTHER APPLICABLE LOCAL CODES. THIS INCLUDES PROPER GROUNDING AND BONDING OF THE SIGN.

REVISIONS

	DATE	REVISION	DESIGNER
1	12.6.17	UPDATE SIGN LOCATION	KEVIN
2	3.9.18	ADD SIGN SCOPE	KEVIN
3	3.20.18	no change	kevin
4			
5			
6			
7			
8			
9			
10			
11			
12			
13			
14			
15			
16			
17			

DESIGN NUMBER: ART09347R3

SITE PLAN **NOT TO SCALE**

5 PAGE 5 SIGN AREA: 6.36ft²

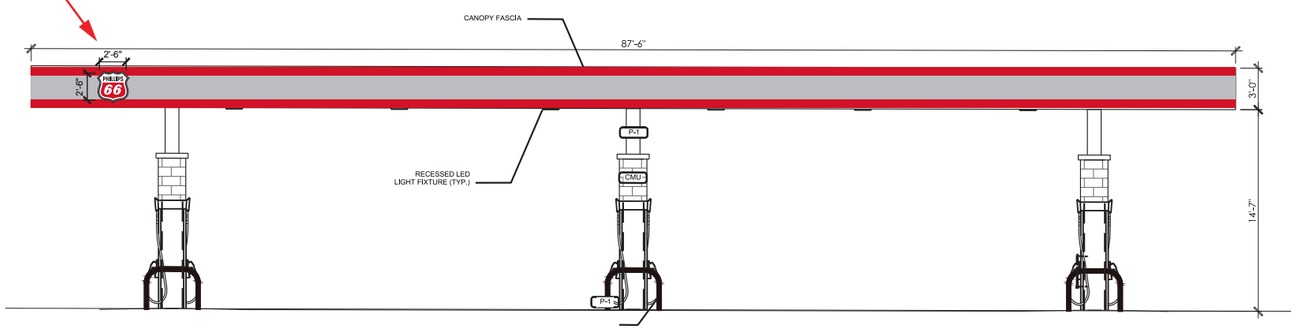

5 **FUEL CANOPY ELEVATION - WEST VIEW**
SCALE = NTS

6 PAGE 5 SIGN AREA: 6.36ft²

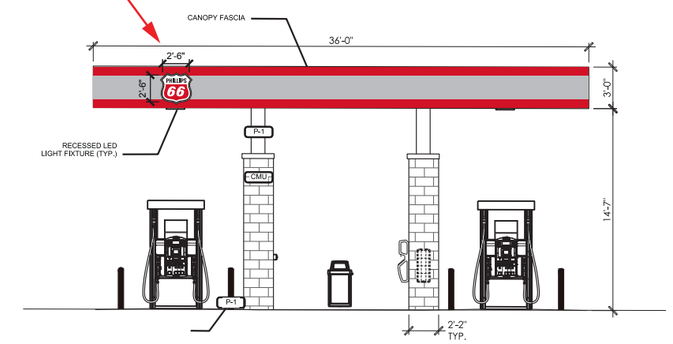

6 **FUEL CANOPY ELEVATION - NORTH VIEW**
SCALE = NTS

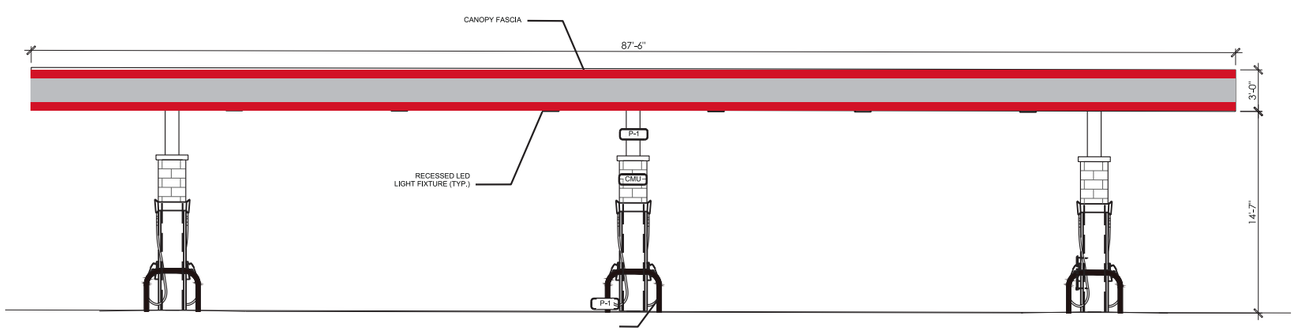

5 **FUEL CANOPY ELEVATION - SIDE VIEW**
SCALE = NTS

7 PAGE 5 SIGN AREA: 6.36ft²

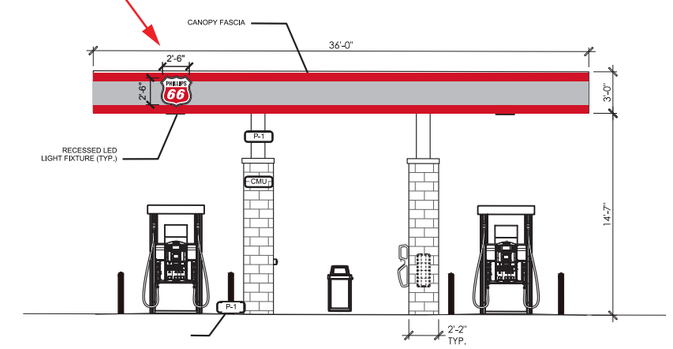

6 **FUEL CANOPY ELEVATION - SOUTH VIEW**
SCALE = NTS

YESCO

Denver Region

Denver
11220 E. 53rd Avenue, Suite 300
Denver, CO 80239
303-375-9933

Colorado Springs
5011 List Drive
Colorado Springs, CO 80919
719-385-0103

This drawing was created to assist you in visualizing our proposal. The original ideas herein are the property of YESCO. Permission to copy or revise this drawing can only be obtained thru a written agreement with YESCO.

© 2017 YESCO LLC
All rights reserved

www.yesco.com

CLIENT: 711 #38107

ADDRESS: 229 GLENEAGLE GATE VIEW

CITY / STATE / ZIP: EL PASO COUNTY, CO

ACCOUNT EXECUTIVE: JOHN CURRAN

DESIGNER: KEVIN LANGFORD

ORIGINAL DATE: 10.27.2017

CUSTOMER APPROVAL

Client Signature / Date

Landlord Signature / Date

ELECTRICAL NOTE

NOTE: UNLESS OTHERWISE NOTED, ELECTRICAL RUNS OR FINAL ELECTRICAL CONNECTION CHARGES ARE NOT INCLUDED. ILLUMINATED DISPLAYS WILL BE WIRED FOR **120 VOLT** POWER UNLESS OTHERWISE INDICATED.

IF VOLTAGE IS NOT 120 PLEASE INDICATE YOUR VOLTAGE HERE

VOLTS AMPS

UL NOTE

YESCO IS A UL LISTED SIGN MANUFACTURER

THIS SIGN IS INTENDED TO BE INSTALLED IN ACCORDANCE WITH THE REQUIREMENTS OF ARTICLE 600 OF THE NATIONAL ELECTRICAL CODE AND / OR OTHER APPLICABLE LOCAL CODES. THIS INCLUDES PROPER GROUNDING AND BONDING OF THE SIGN.

REVISIONS

DATE	REVISION	DESIGNER
12.6.17	NO CHANGE	KEVIN
3.9.18	NO CHANGE	KEVIN
3.20.18	no change	kevin

DESIGN NUMBER: ART09347R3

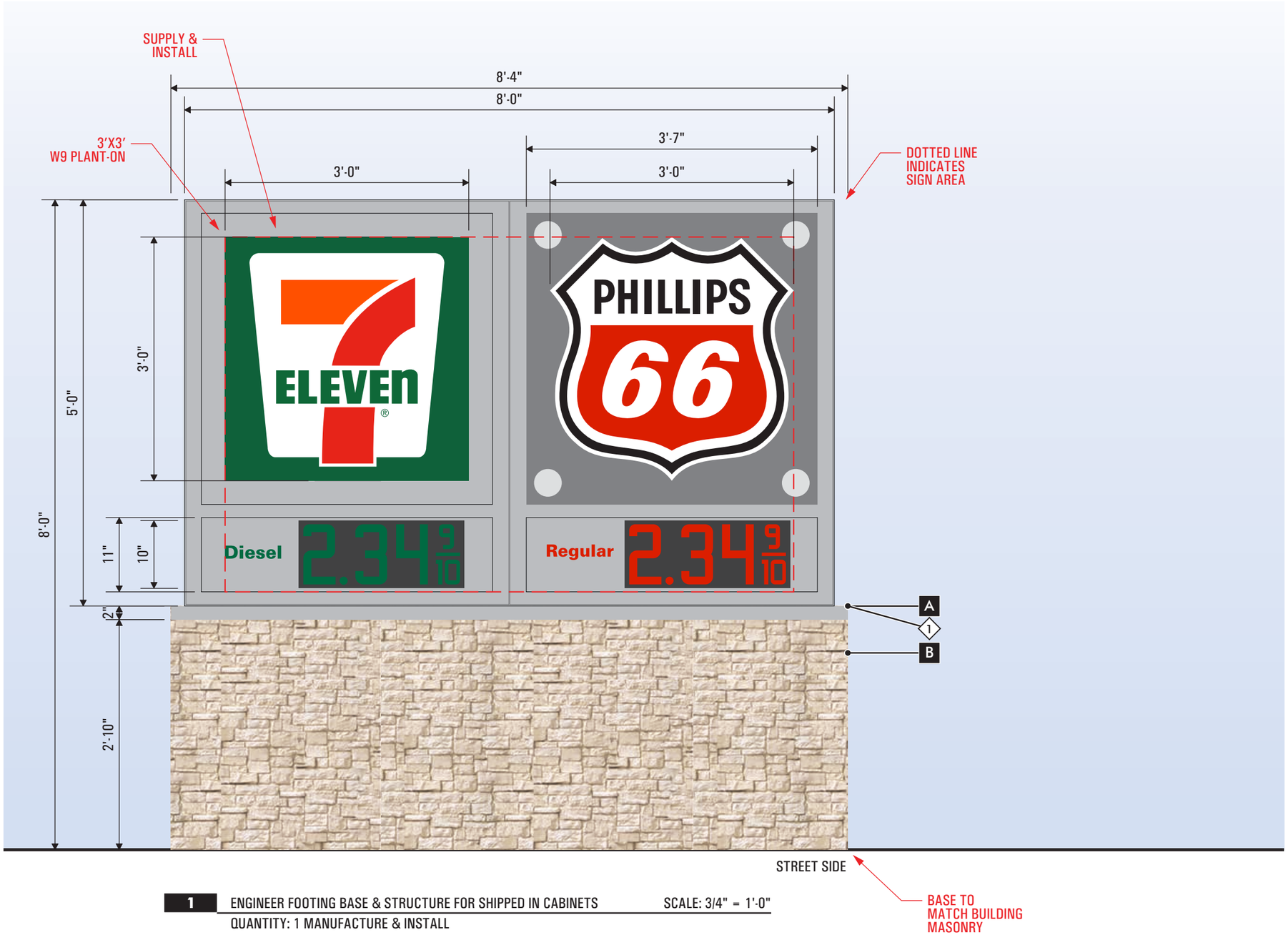

1 ENGINEER FOOTING BASE & STRUCTURE FOR SHIPPED IN CABINETS — SCALE: 3/4" = 1'-0"

QUANTITY: 1 MANUFACTURE & INSTALL

SCOPE OF WORK:

MANUFACTURE & INSTALL (1) MONUMENT SIGN BASES
RECEIVE & INSTALL D/F ILLUMINATED PHILLIP 66, 7-ELEVEN AND GPC CABINETS TO MONUMENT BASE.
T.B.D. YESCO ENGINEERING - FOOTING, BASE, STRUCTURE.
RECEIVE & INSTALL (3) PHILLIP 66 GAS CANOPY CABINETS
RECEIVE & INSTALL (4) 7 ELEVEN CHANNEL LETTER SETS

PERMITTING	SIGN AREA 30.82ft²
PERMITTING	
PERMITTING	

FINAL ELECTRICAL CONNECTION BY:	NOT INCLUDED

FABRICATION SPECIFICATIONS

A	CAP	MATERIAL	ALUMINUM
		PAINT	MATCH PHILLIPS 66 CABINET
		FINISH	GLOSS
B	STONE	TYPE	STONE VENEER
		SUPPLIER	VENDOR
		STYLE/COLOR	T.B.D. MATCH BUILDING
		SUBSTRATE	CEMENT BOARD OVER STEEL

COLOR KEY

1	PAINT	MATCH TO PHILLIP 66 CABINETS

NOTE: UNLESS OTHERWISE NOTED, THE COLORS DEPICTED ON THIS RENDERING MAY NOT MATCH ACTUAL COLORS ON FINISHED DISPLAY. PLEASE REFER TO COLOR-CALLOUTS AND THEIR APPROPRIATE VENDOR SPECIFIED SAMPLES FOR APPROVED COLOR SPECIFICATIONS

YESCO
Denver Region

Denver
11220 E. 53rd Avenue, Suite 300
Denver, CO 80239
303-375-9933

Colorado Springs
5011 List Drive
Colorado Springs, CO 80919
719-385-0103

This drawing was created to assist you in visualizing our proposal. The original ideas herein are the property of YESCO. Permission to copy or revise this drawing can only be obtained thru a written agreement with YESCO.

© 2017 YESCO LLC
All rights reserved

www.yesco.com

CLIENT: 711 #38107

ADDRESS: 229 GLENEAGLE GATE VIEW

CITY / STATE / ZIP: EL PASO COUNTY, CO

ACCOUNT EXECUTIVE: JOHN CURRAN

DESIGNER: KEVIN LANGFORD

ORIGINAL DATE: 10.27.2017

CUSTOMER APPROVAL

Client Signature / Date

Landlord Signature / Date

ELECTRICAL NOTE

NOTE: UNLESS OTHERWISE NOTED, ELECTRICAL RUNS OR FINAL ELECTRICAL CONNECTION CHARGES ARE NOT INCLUDED. ILLUMINATED DISPLAYS WILL BE WIRED FOR **120 VOLT** POWER UNLESS OTHERWISE INDICATED.

IF VOLTAGE IS NOT 120 PLEASE INDICATE YOUR VOLTAGE HERE

VOLTS - - - AMPS - - -

UL NOTE

YESCO IS A UL LISTED SIGN MANUFACTURER

THIS SIGN IS INTENDED TO BE INSTALLED IN ACCORDANCE WITH THE REQUIREMENTS OF ARTICLE 600 OF THE NATIONAL ELECTRICAL CODE AND / OR OTHER APPLICABLE LOCAL CODES. THIS INCLUDES PROPER GROUNDING AND BONDING OF THE SIGN.

REVISIONS

DATE	REVISION	DESIGNER
12.6.17	NO CHANGE	KEVIN
3.9.18	NO CHANGE	KEVIN
3.20.18	no change	kevin

DESIGN NUMBER: ART09347R3

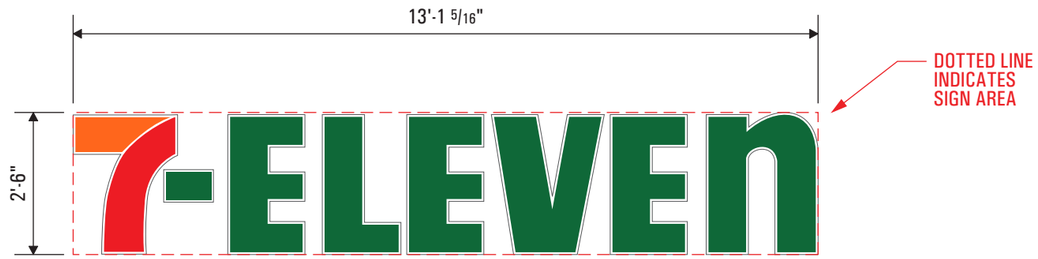

2	INTERNALLY ILLUMINATED 7-ELEVEN CHANNEL LETTERS	SCALE: 3/8" = 1'-0"
9	QUANTITY: 2 SUPPLY & INSTALL	

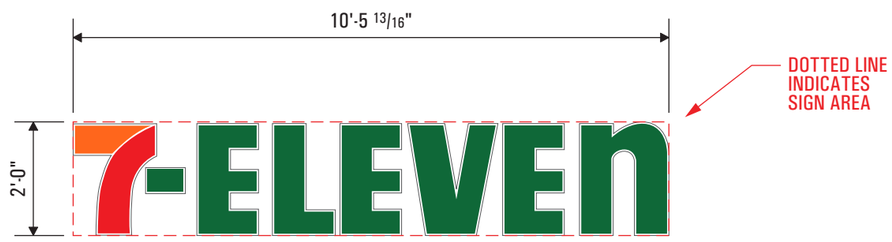

3	INTERNALLY ILLUMINATED 7-ELEVEN CHANNEL LETTERS	SCALE: 3/8" = 1'-0"
4	QUANTITY: 2 SUPPLY & INSTALL	

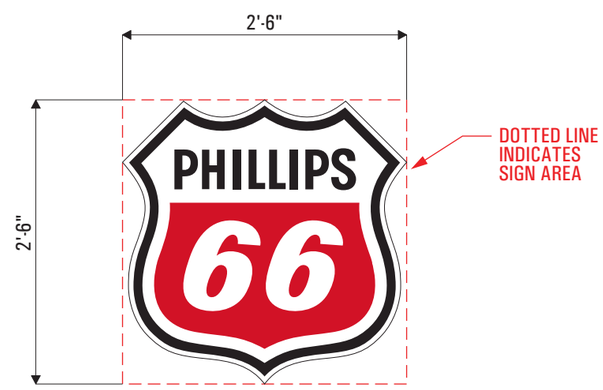

5	NEW PHILLIP 66 CANOPY SIGN	SCALE: 3/4" = 1'-0"
6	QUANTITY: 3 RECEIVE & INSTALL	
7		

SCOPE OF WORK:

RECEIVE & INSTALL (4) 7-11 CHANNEL LETTER SETS
RECEIVE & INSTALL (3) PHILLIP 66 CANOPY LOGO CABINETS

PERMITTING	SIGN 2,9 AREA: 32.111ft²
PERMITTING	SIGN 3,4 AREA: 20.140ft²
PERMITTING	SIGN 5,6,7 AREA: 6.36ft²
FINAL ELECTRICAL CONNECTION BY:	NOT INCLUDED

YESCO
Denver Region

Denver
11220 E. 53rd Avenue, Suite 300
Denver, CO 80239
303-375-9933

Colorado Springs
5011 List Drive
Colorado Springs, CO 80919
719-385-0103

This drawing was created to assist you in visualizing our proposal. The original ideas herein are the property of YESCO. Permission to copy or revise this drawing can only be obtained thru a written agreement with YESCO.

© 2017 YESCO LLC
All rights reserved

www.yesco.com

CLIENT: 711 #38107
ADDRESS: 229 GLENEAGLE GATE VIEW
CITY / STATE / ZIP: EL PASO COUNTY, CO
ACCOUNT EXECUTIVE: JOHN CURRAN
DESIGNER: KEVIN LANGFORD
ORIGINAL DATE: 10.27.2017

CUSTOMER APPROVAL

Client Signature / Date

Landlord Signature / Date

ELECTRICAL NOTE

NOTE: UNLESS OTHERWISE NOTED, ELECTRICAL RUNS OR FINAL ELECTRICAL CONNECTION CHARGES ARE NOT INCLUDED. ILLUMINATED DISPLAYS WILL BE WIRED FOR **120 VOLT** POWER UNLESS OTHERWISE INDICATED.

IF VOLTAGE IS NOT 120 PLEASE INDICATE YOUR VOLTAGE HERE

- - - VOLTS - - - AMPS

UL NOTE

YESCO IS A UL LISTED SIGN MANUFACTURER

THIS SIGN IS INTENDED TO BE INSTALLED IN ACCORDANCE WITH THE REQUIREMENTS OF ARTICLE 600 OF THE NATIONAL ELECTRICAL CODE AND / OR OTHER APPLICABLE LOCAL CODES. THIS INCLUDES PROPER GROUNDING AND BONDING OF THE SIGN.

REVISIONS

DATE	REVISION	DESIGNER
12.6.17	UPDATE QUANTITY	KEVIN
3.9.18	ADD SIGN SCOPE	KEVIN
3.20.18	no change	kevin

DESIGN NUMBER: ART09347R3

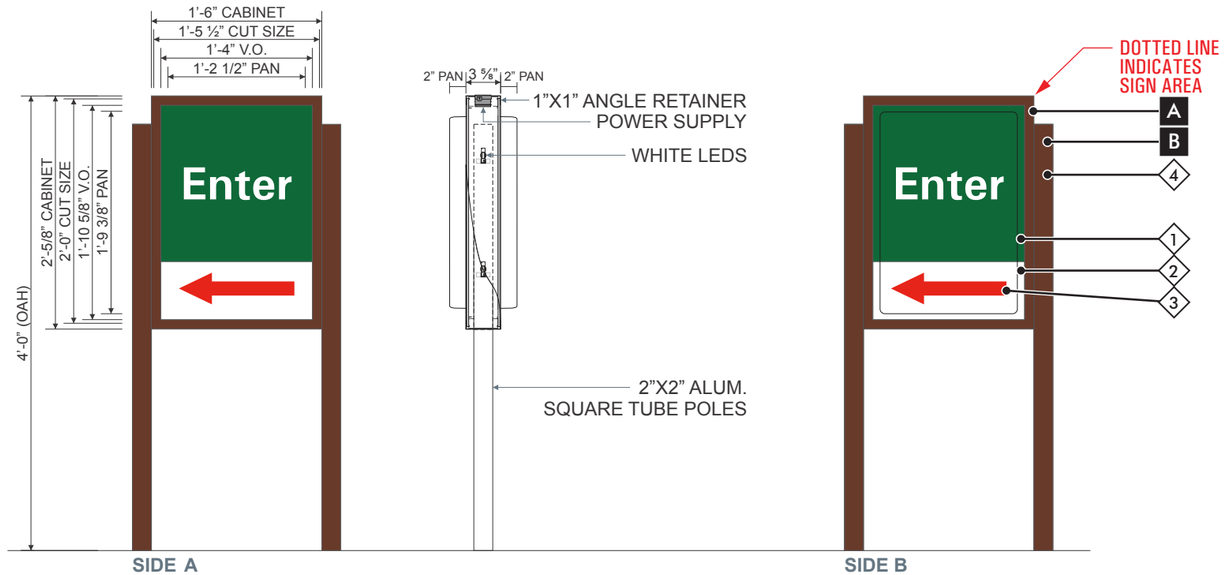

8 D/F ILLUMINATED DIRECTIONAL SIGN — SCALE: 3/4" = 1'-0"

QUANTITY: 1 MANUFACTURE & INSTALL

SCOPE OF WORK:

MANUFACTURE & INSTALL (1) D/F INTERNALLY ILLUMINATED DIRECTIONAL SIGN

PERMITTING	SIGN AREA: 3ft²
FINAL ELECTRICAL CONNECTION BY:	NOT INCLUDED

FABRICATION SPECIFICATIONS

A	CABINET	MATERIAL	ALUMINUM
		PAINT	SW DURANODIC BRONZE
		FINISH	SATIN
		LIGHTING	LED
	RETAINER	TYPE	ALUMINUM
		SIZE	1 ½" x 1 ½"
		PAINT	SW DURANODIC BRONZE
		FINISH	SATIN
	FACE	MATERIAL	ACRYLIC
		COLOR	#7328 WHITE ACRYLIC
	VINYL	LAYER	1st SURFACE
		COLOR	SEE COLOR KEY
B	STRUCTURE	MATERIAL	ALUMINUM
		TYPE	SQUARE TUBE
		SIZE	2"x2"
		PAINT	SW DURANODIC BRONZE
		FINISH	SATIN

COLOR KEY

1	VINYL	3M MATCH TO PMS 349C
2	ACRYLIC	WHITE SHOW THRU
3	VINYL	3M MATCH TO PMS 485C
4	PAINT	SW DURANODIC BRONZE

NOTE: UNLESS OTHERWISE NOTED, THE COLORS DEPICTED ON THIS RENDERING MAY NOT MATCH ACTUAL COLORS ON FINISHED DISPLAY. PLEASE REFER TO COLOR-CALLOUTS AND THEIR APPROPRIATE VENDOR SPECIFIED SAMPLES FOR APPROVED COLOR SPECIFICATIONS

YESCO

Denver Region

Denver
11220 E. 53rd Avenue, Suite 300
Denver, CO 80239
303-375-9933

Colorado Springs
5011 List Drive
Colorado Springs, CO 80919
719-385-0103

This drawing was created to assist you in visualizing our proposal. The original ideas herein are the property of YESCO. Permission to copy or revise this drawing can only be obtained thru a written agreement with YESCO.

© 2017 YESCO LLC
All rights reserved

www.yesco.com

CLIENT: 711 #38107

ADDRESS: 229 GLENEAGLE GATE VIEW

CITY / STATE / ZIP: EL PASO COUNTY, CO

ACCOUNT EXECUTIVE: JOHN CURRAN

DESIGNER: KEVIN LANGFORD

ORIGINAL DATE: 10.27.2017

CUSTOMER APPROVAL

Client Signature / Date

Landlord Signature / Date

ELECTRICAL NOTE

NOTE: UNLESS OTHERWISE NOTED, ELECTRICAL RUNS OR FINAL ELECTRICAL CONNECTION CHARGES ARE NOT INCLUDED. ILLUMINATED DISPLAYS WILL BE WIRED FOR **120 VOLT** POWER UNLESS OTHERWISE INDICATED.

IF VOLTAGE IS NOT 120 PLEASE INDICATE YOUR VOLTAGE HERE

- - - VOLTS — - - - AMPS

UL NOTE

YESCO IS A UL LISTED SIGN MANUFACTURER

THIS SIGN IS INTENDED TO BE INSTALLED IN ACCORDANCE WITH THE REQUIREMENTS OF ARTICLE 600 OF THE NATIONAL ELECTRICAL CODE AND / OR OTHER APPLICABLE LOCAL CODES. THIS INCLUDES PROPER GROUNDING AND BONDING OF THE SIGN.

REVISIONS

DATE	REVISION	DESIGNER
12.6.17	NO CHANGE	KEVIN
3.09.18	no change	kevin
3.20.18	no change	kevin

DESIGN NUMBER: ART09347R3