CORVALLIS

TRAFFIC IMPACT STUDY

Prepared for:

City of Fountain, CO

Prepared by:

Matrix
Excellence by Design

2435 Research Parkway, Suite 300
Colorado Springs, CO 80920

Contact: Scott Barnhart, PE, PTOE
719.575.0100

On Behalf of:

HPHR Properties, LLC
14160 Gleneagle Drive
Colorado Springs, CO 80921

June 14, 2021

Table of Contents

Appendices

Table of Figures

Table of Tables

1.0 Introduction

Corvallis is a 204.9-acre development that is planned in northeast Fountain, CO. The property is comprised of 14 parcels, consisting of:

- 140.8 acres of single family residential
- 16.1 acres of multi-family residential
- 36.0 acres of commercial
- 12.0 acres of school
- 45.6 acres of open space
- 26.4 acres of dedicated right-of-way

The project lies to the south of Fontaine Boulevard and to the west of Marksheffel Road. Figure 1 shows the vicinity of the project location.

The purpose of this study is to assess the effects this proposed development will have on the surrounding transportation system and is organized as follows:

Introduction – Describes the purpose and intent of this study.

Existing Conditions Analysis – Describes the study area land uses as well as the existing and future roadway network.

Project Traffic – Describes the proposed development and its location, as well as the expected number of daily and peak hour trips that will be generated by Corvallis. The expected external trip distribution is also shown.

Traffic Analysis

> *Project Buildout Year (2030) Traffic Analysis* – Will analyze the study area background traffic (no-build scenario) and total traffic (with project scenario) for the projected 2030 buildout year.
>
> *Horizon Year (2040) Traffic Analysis* – Will analyze the study area background and total traffic for the projected 2040 horizon year.

Findings and Conclusions – identifies any deficiencies in the study area roadway network with or without the project and mitigation measures that will alleviate any identified deficiencies.

Recommendations – Provides a summary of the study findings.

The following existing intersections are evaluated in this study:

1. Powers Boulevard/Fontaine Boulevard
2. Fontaine Boulevard/Rolling View Drive
3. Fontaine Boulevard/Marksheffel Road
4. Marksheffel Road/Lorson Boulevard
5. Marksheffel Road/Mesa Ridge Parkway
6. Mesa Ridge Parkway/Spring Glen Drive
7. Mesa Ridge Parkway/Autumn Glen Avenue
8. Mesa Ridge Parkway/Wayfarer Drive
9. Powers Boulevard/Mesa Ridge Parkway

Figure 1 - Vicinity Map

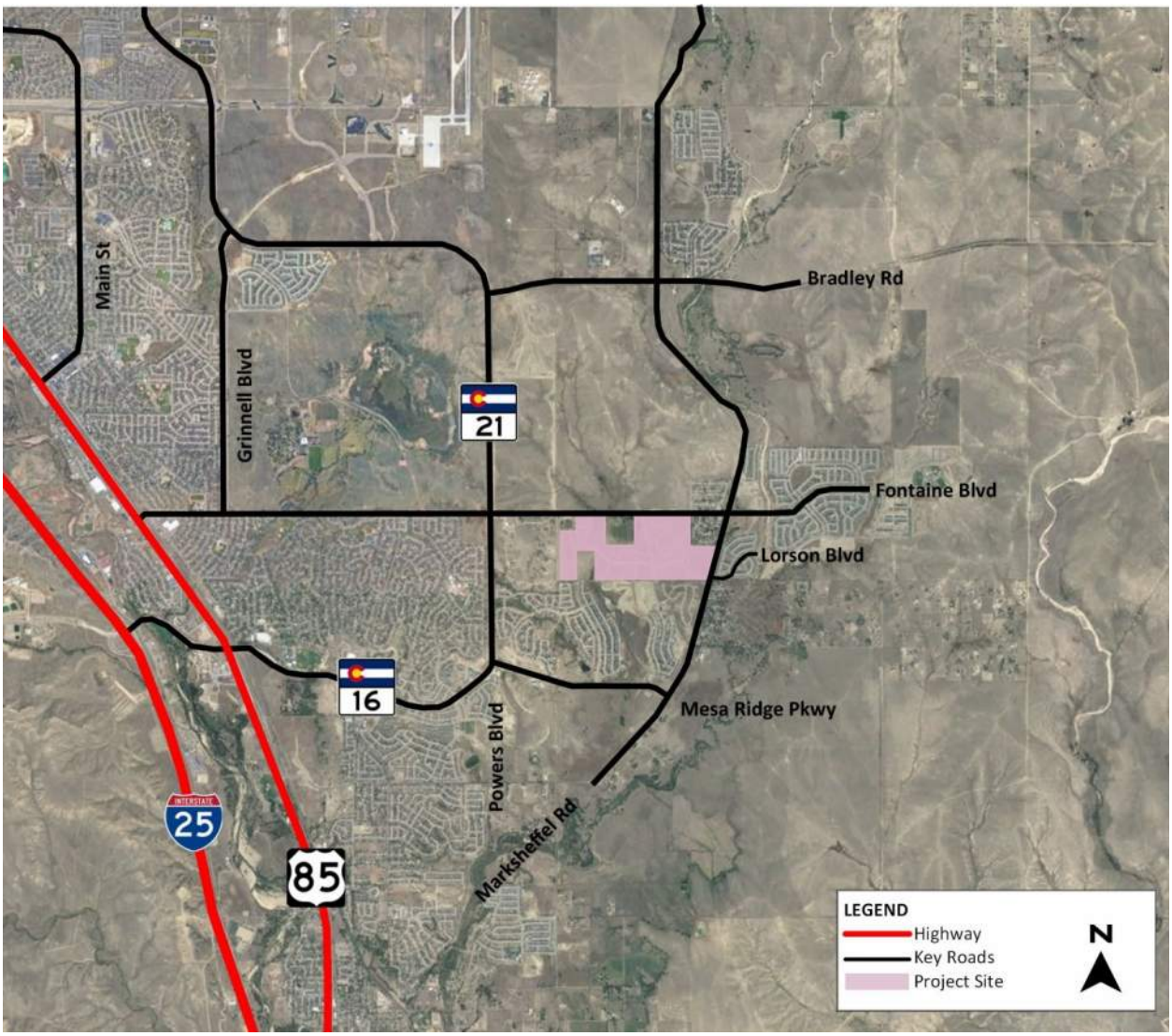

2.0 Existing Conditions Analysis

Existing Roadways

Corvallis is located generally to the south of Fontaine Boulevard, to the northwest of Marksheffel Road, approximately one half-mile east of Powers Boulevard (CO-21), and north of the Lorson Boulevard alignment. It is approximately ¾-mile north of Mesa Ridge Parkway and will connect to this roadway via Autumn Glen Avenue and Spring Glen Drive. The following describes the existing conditions of the major study area roadways:

Powers Boulevard (CO-21) – currently a four-lane divided highway running north-south and consisting of a 30' wide median, 5' inside shoulder, two 12' lanes, and a 10' outside shoulder. There are no streetlights, sidewalks, posted bicycle lanes (although the shoulder is wide enough to safely accommodate bicycles), or curb and gutter through the study area. It has a posted speed limit of 55 miles-per-hour (MPH). There are traffic signals at the intersections with Fontaine Boulevard and Mesa

Ridge Parkway and one right-in/right-out access to the east at Roanfield Lane, approximately halfway between these two intersections. There are northbound acceleration lanes at Mesa Ridge Parkway and Roanfield Lane.

Fontaine Boulevard – currently a two-lane undivided highway running east-west and consisting of 11' lanes with no median, shoulders, streetlights, sidewalks, bicycle lanes, or curb and gutter. It has a posted speed limit of 45 MPH between Powers Boulevard and Weeping Willow Drive and a posted speed limit of 35 MPH between Weeping Willow Drive and Marksheffel Road. There are traffic signals at the intersections with Powers Boulevard and Marksheffel Drive. All other intersections are side-street stop controlled. Guardrail is provided at existing drainage structure locations.

Marksheffel Boulevard – currently a two-lane roadway with continuous two-way left turn lane (TWLTL) running northeast-southwest and consisting of 10' shoulders, 11' lanes, and a 16' TWLTL. There are no streetlights, sidewalks, posted bicycle lanes (although the shoulder is wide enough to safely accommodate bicycles), or curb and gutter through the study area. It has a posted speed limit of 55 MPH. There is a traffic signal at the intersection with Fontaine Boulevard, with all other intersections being side-street stop controlled. There is an acceleration lane to accommodate westbound to southbound left turns at Peaceful Valley Road.

Mesa Ridge Parkway - currently a two-lane undivided roadway running east-west and consisting of 12' lanes and 5' shoulders with no median, streetlights, sidewalks, bicycle lanes, or curb and gutter. It has a posted speed limit of 45 MPH. There is a traffic signal at the intersection with Powers Boulevard, with all other intersections being side-street stop controlled. Approved traffic impact studies for The Glen at Widefield development adjacent to Corvallis show that Mesa Ridge Parkway will have traffic signals with Wayfarer Drive, Autumn Glen Avenue, and Spring Glen Drive.

Adjacent Developments/Land Uses & Future Roadways

Land adjacent to Corvallis within Fountain is generally zoned for single-family residential, multifamily residential, park/open space, and neighborhood commercial, per the City of Fountain Comprehensive Plan Land Use Categories map. Adjacent land located in Colorado Springs is zoned for industrial, medium-density residential, and high-density residential per the Banning Lewis Ranch Master Plan. Adjacent land located within El Paso County is zoned primarily for agricultural (5 acres), Planned Unit Development (PUD), and otherwise rural/suburban residential of various densities.

Immediately to the south of Corvallis, The Glen at Widefield is almost built out, with only a few filings remaining before its anticipated completion. To the east across Marksheffel Road, Lorson Ranch is currently being developed.

As Corvallis reaches buildout, the adjacent roadway network will develop as outlined in the El Paso County 2016 Major Transportation Corridors Plan Update, adopted December 6, 2016. This plan shows the 2040 roadway configurations as such:

Fontaine Blvd	from Powers Blvd to western project boundary: 4 lane minor arterial
	from eastern project boundary to Marksheffel Rd: 4 lane principal arterial
Powers Blvd	from Mesa Ridge Pkwy to Fontaine Blvd: 4 lane expressway
Mesa Ridge Pkwy	from Powers Blvd to Marksheffel Rd: 4 lane principal arterial
	east of Marksheffel Rd: 2 lane minor arterial

Marksheffel Rd from south of project area to north of project area: 4 lane expressway

The portion of Fontaine Blvd that runs along the project site (unclassified in El Paso County's plan) is classified in the City of Fountain Traffic Master Plan as a 4-lane community arterial.

There are future traffic interchanges proposed for the junctions of Powers Blvd/Mesa Ridge Parkway and Powers Blvd/Fontaine Blvd.

Traffic Volumes

Turning movement counts were taken at the study intersections and daily two-way traffic counts were taken at select locations along the roadway segments. These counts were conducted on April 28, 2020. Figure 2 shows the existing turning movement counts and daily tube count locations and volumes. Morning peak hour counts were conducted between 7:00 AM and 9:00 AM, with the peak AM hour mostly occurring at either 7:15 to 8:15 or 7:45 to 8:45. Afternoon peak hour counts were conducted between 4:00 PM and 6:00 PM, with the peak PM hour generally being 4:45 to 5:45. Because these counts were taken during the 2020 COVID-19 pandemic, these counts were compared to historical average daily traffic (ADT) volumes and the peak hour counts were adjusted up if lower, or left as they were if higher. This will ensure that the estimated traffic will be conservative, despite any influences on traffic patterns the pandemic may have caused. The raw traffic counts obtained by the traffic counting consultant are provided in Appendix A. Figure 3 shows the existing lane configurations and traffic control for each intersection.

Figure 2 – Existing (2020) Traffic

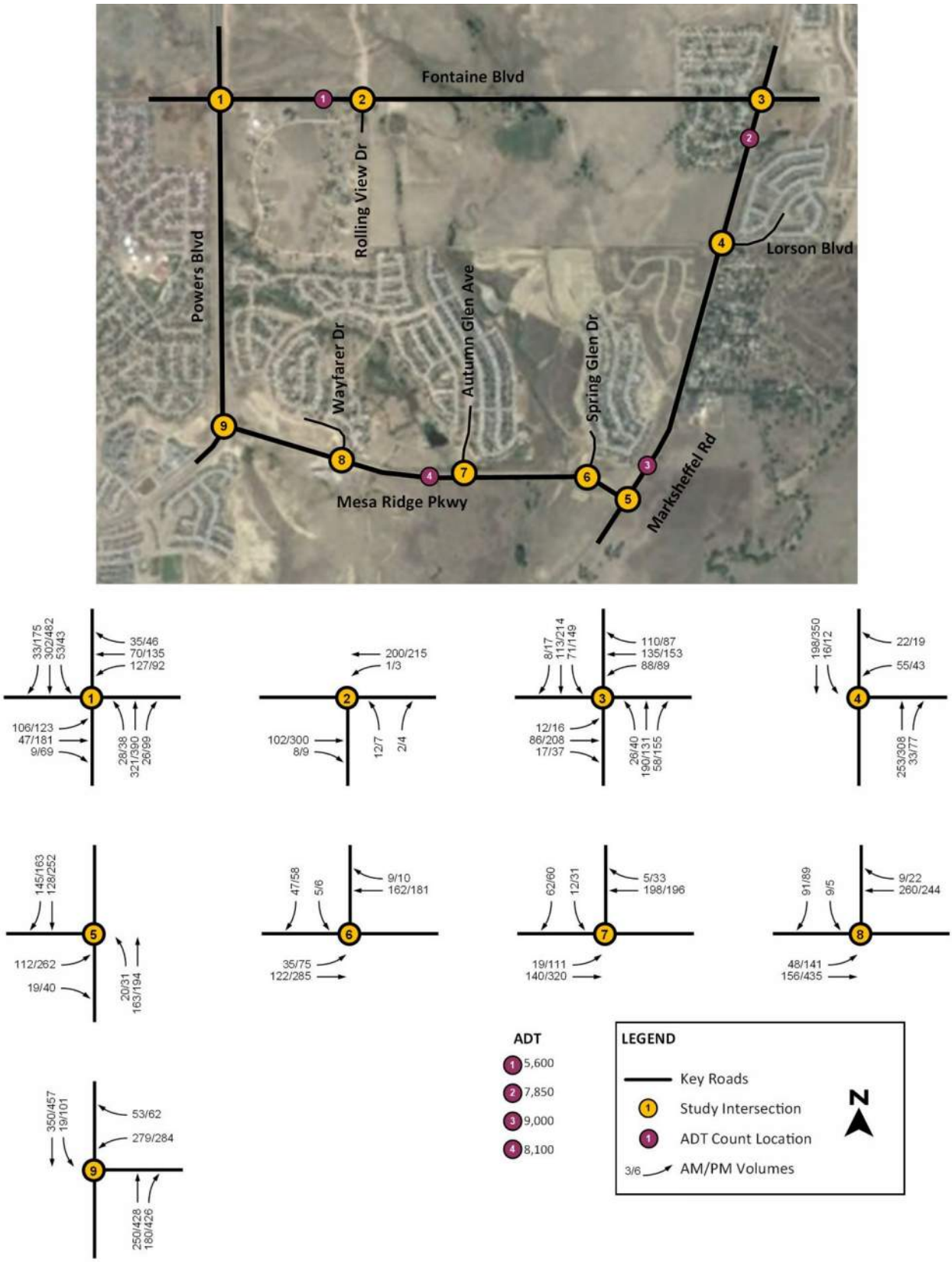

Figure 3 – Existing (2020) Lane Configurations and Traffic Control

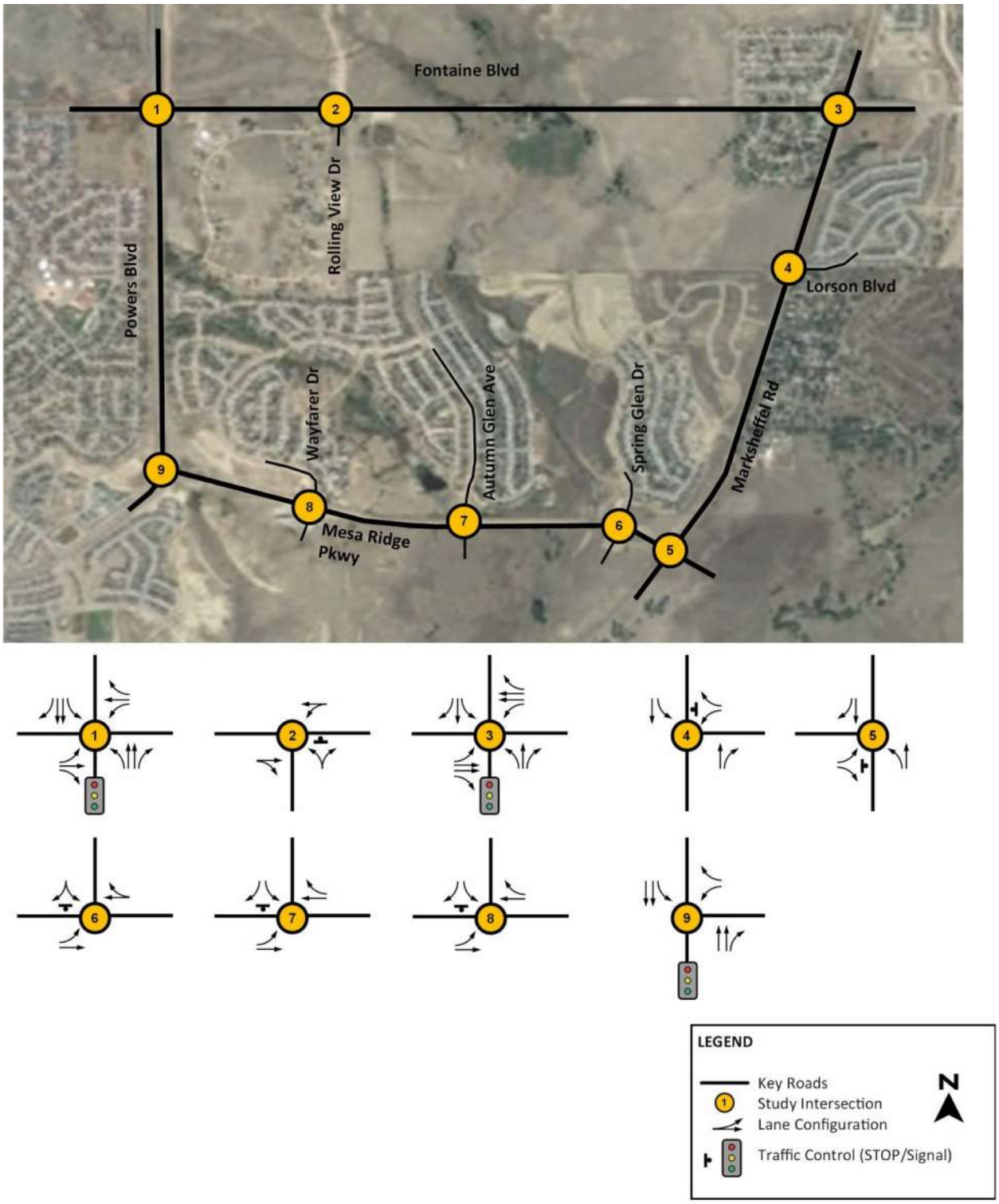

Intersection & Roadway Capacity Analysis

To determine how efficiently and effectively the perimeter street system accommodates the existing traffic volumes, the key intersections in the vicinity of the proposed development were analyzed using Synchro 10 software. The results are shown as Levels of Service (LOS). LOS is a qualitative measure used to describe the condition of traffic flow and delay, ranging from excellent conditions at LOS A to very poor conditions at LOS F. In general, agencies try to maintain a minimum of LOS D for intersection and approach operations. This report will show movement LOS for informational and illustrative purposes, but mitigation will only be triggered by an intersection or approach falling below LOS D.

Table 1 provides a description of conditions for each LOS at a signalized intersection.

Table 1 - Signalized Intersection Level of Service Criteria

Level of Service	Average Stopped Delay (seconds per vehicle)	Description
A	≤ 10	Very low delay. Most vehicles do not stop.
B	> 10 to 20	Generally good progression. Slight delays.
C	> 20 to 35	Increased number of stopped vehicles
D	> 35 to 55	Noticeable congestion.
E	> 55 to 80	High delays and frequent cycle failures.
F	> 80	Forced flow. Extensive queuing.

Source: HCM2010 Highway Capacity Manual (Transportation Research Board, 2010)

For unsignalized (side-street stop controlled) intersections, Synchro 10 software was used again. The software applies the Transportation Research Board's Highway Capacity Manual 6th Edition (HCM) methodology for unsignalized intersections to determine average control delay per vehicle (measured in seconds) for each stop-controlled movement. The method incorporates delay associated with deceleration, acceleration, stopping, and moving up in the queue. For side street stop-controlled intersections, delay is represented as the average delay per vehicle for the worst approach, not the overall intersection.

Table 2 summarizes the relationship between delay and level of service for an unsignalized intersection.

Table 2 - Unsignalized Intersection Level of Service Criteria

Level of Service	Average Total Delay (seconds per vehicle)	Description
A	≤ 10	Little or no conflicting traffic for minor street approach.
B	> 10 to 15	Minor street begins to notice absence of available gaps.
C	> 15 to 25	Minor street begins experiencing delay for available gaps.
D	> 25 to 35	Minor street starts to experience queuing.
E	> 35 to 50	Extensive minor street queuing due to insufficient gaps.
F	> 50	Insufficient gaps to allow minor street traffic to cross safely through the major street traffic stream.

Source: HCM2010 Highway Capacity Manual (Transportation Research Board, 2010)

Table 3 shows the results of the existing traffic LOS analysis and Table 4 shows the existing storage length and 95th percentile queue lengths. The full analysis software printout is provided in Appendix B.

Table 3 - Existing (2020) AM Intersection LOS

			AM Peak Hour Results					PM Peak Hour Results				
Int ID	Intersection	Control	Int LOS	Appr	Appr LOS	Mvmt	Mvmt LOS	Int LOS	Appr	Appr LOS	Mvmt	Mvmt LOS
1	Powers & Fontaine	Signalized	A	EB	B	EBL	B	A	EB	B	EBL	B
						EBT	B				EBT	B
						EBR	A				EBR	A
				WB	B	WBL	B		WB	B	WBL	B
						WBT	B				WBT	B
						WBR	A				WBR	A
				NB	A	NBL	A		NB	A	NBL	A
						NBT	A				NBT	A
						NBR	A				NBR	A
				SB	A	SBL	A		SB	A	SBL	A
						SBT	A				SBT	A
						SBR	A				SBR	A
2	Rolling View & Fontaine	TWSC	B	EB	-	EBTR	-	B	EB	-	EBTR	-
				WB	-	WBLT	A		WB	-	WBLT	A
				NB	B	NBLR	B		NB	B	NBLR	B
3	Marksheffel & Fontaine	Signalized	A	EB	B	EBL	B	B	EB	B	EBL	B
						EBT	B				EBT	B
						EBR	A				EBR	A
				WB	B	WBL	B		WB	B	WBL	B
						WBT	B				WBT	B
						WBR	A				WBR	A
				NB	A	NBL	A		NB	A	NBL	A
						NBT	A				NBT	A
						NBR	A				NBR	A
				SB	A	SBL	A		SB	A	SBL	A
						SBT	A				SBT	A
						SBR	A				SBR	A
4	Marksheffel & Lorson	TWSC	B	WB	B	WBL	B	B	WB	B	WBL	B
						WBR	B				WBR	B
				NB	-	NBT	-		NB	-	NBT	-
						NBR	-				NBR	-
				SB	-	SBL	A		SB	-	SBL	A
						SBT	-				SBT	-
5	Marksheffel & Mesa Ridge	TWSC	B	EB	B	EBL	B	C	EB	C	EBL	C
						EBR	A				EBR	A
				NB	-	NBL	A		NB	-	NBL	A
						NBT	A				NBT	A
				SB	-	SBT	-		SB	-	SBT	-
						SBR	-				SBR	-
6	Mesa Ridge & Spring Glen	TWSC	A	EB	A	EBL	A	B	EB	-	EBL	A
						EBT	-				EBT	-
				WB	-	WBTR	-		WB	-	WBTR	-
				SB	-	SBLR	A		SB	B	SBLR	B
7	Mesa Ridge & Autumn Glen	TWSC	B	EB	-	EBL	A	B	EB	-	EBL	A
						EBT	-				EBT	-
				WB	-	WBT	-		WB	-	WBT	-
						WBR	-				WBR	-
				SB	B	SBL	B		SB	B	SBL	C

			AM Peak Hour Results					PM Peak Hour Results				
Int ID	Intersection	Control	Int LOS	Appr	Appr LOS	Mvmt	Mvmt LOS	Int LOS	Appr	Appr LOS	Mvmt	Mvmt LOS
						SBR	A				SBR	A
8	Mesa Ridge & Wayfarer	TWSC	B	EB	-	EBL	A	B	EB	-	EBL	A
						EBT	-				EBT	-
				WB	-	WBT	-		WB	-	WBT	-
						WBR	-				WBR	-
				SB	B	SBL	B		SB	B	SBL	C
						SBR	B				SBR	B
9	Powers & Mesa Ridge	Signalized	A	WB	B	WBL	B	A	WB	C	WBL	C
						WBR	B				WBR	B
				NB	A	NBT	A		NB	A	NBT	A
						NBR	A				NBR	A
				SB	A	SBL	A		SB	A	SBL	A
						SBT	A				SBT	A

Table 4 - Existing (2020) 95th Percentile Queue Lengths

				AM Peak Hour	PM Peak Hour
Int ID	Intersection	Movement	Turn Lane Storage (ft)	Queue Length (ft)	Queue Length (ft)
1	Powers & Fontaine	EBL	135	49	58
		EBT	-	25	75
		EBR	450	4	19
		WBL	200	557	45
		WBT	-	33	58
		WBR	400	13	14
		NBL	700	13	18
		NBT	-	41	54
		NBR	600	8	18
		SBL	-	20	19
		SBT	-	37	64
		SBR	490	8	23
2	Rolling View & Fontaine	EBTR	-	-	-
		WBLT	-	0	0
		NBLR	-	3	3
3	Marksheffel & Fontaine	EBL	225	13	16
		EBT	-	25	51
		EBR	100	10	16
		WBL	-	55	56
		WBT	-	35	38
		WBR	-	30	22
		NBL	455	12	18
		NBT	-	54	44
		NBR	455	10	21
		SBL	385	26	54
		SBT	-	35	69
		SBR	385	2	6
4	Marksheffel & Lorson	WBL	250	13	8
		WBR	-	3	3
		NBT	-	-	-
		NBR	250	-	-

				AM Peak Hour	PM Peak Hour
Int ID	Intersection	Movement	Turn Lane Storage (ft)	Queue Length (ft)	Queue Length (ft)
		SBL	400	0	0
		SBT	-	-	-
5	Marksheffel & Mesa Ridge	EBL	300	18	65
		EBR	-	3	5
		NBL	-	3	3
		NBT	-	-	-
		SBT	-	-	-
		SBR	500	-	-
6	Mesa Ridge & Spring Glen	EBL	485	3	5
		EBT	-	0	-
		WBTR	-	0	-
		SBLR	-	8	8
7	Mesa Ridge & Autumn Glen	EBL	325	3	8
		EBT	-	-	-
		WBT	-	-	-
		WBR	275	-	-
		SBL	250	3	10
		SBR	-	8	8
8	Mesa Ridge & Wayfarer	EBL	300	3	10
		EBT	-	-	-
		WBT	-	-	-
		WBR	250	-	-
		SBL	-	3	3
		SBR	125	13	13
9	Powers & Mesa Ridge	WBL	325	133	150
		WBR	-	18	22
		NBT	-	40	67
		NBR	150	23	36
		SBL	1000	12	47
		SBT	-	54	75

All existing study area intersections for both AM and PM peak hours operate at acceptable levels of service and with no queue lengths exceeding their available storage length.

3.0 Project Traffic

Project Description, Location & Accessibility

Corvallis is located near the southwest corner of Fontaine Boulevard and Marksheffel Road. It is a 275-acre development in total that is comprised of seven single family residential parcels, two multifamily residential parcels, four commercial parcels, and a school parcel. The development will be accessible from Fontaine Boulevard via a community collector (future connection to Autumn Glen Avenue, providing access to Mesa Ridge Parkway to the south) and a community arterial that terminates at and provides access to Marksheffel Road. A residential collector will connect Spring Glen Drive, which provides access to Mesa Ridge Parkway to the south, to an east-west residential collector that serves as the primary circulator within the development. Figure 4 shows the overall development plan, including the general layout of interior roadways and where they access the roadway network, land uses, parcel sizes, and the approximate number of dwelling units per acre.

Figure 4 - Site Plan

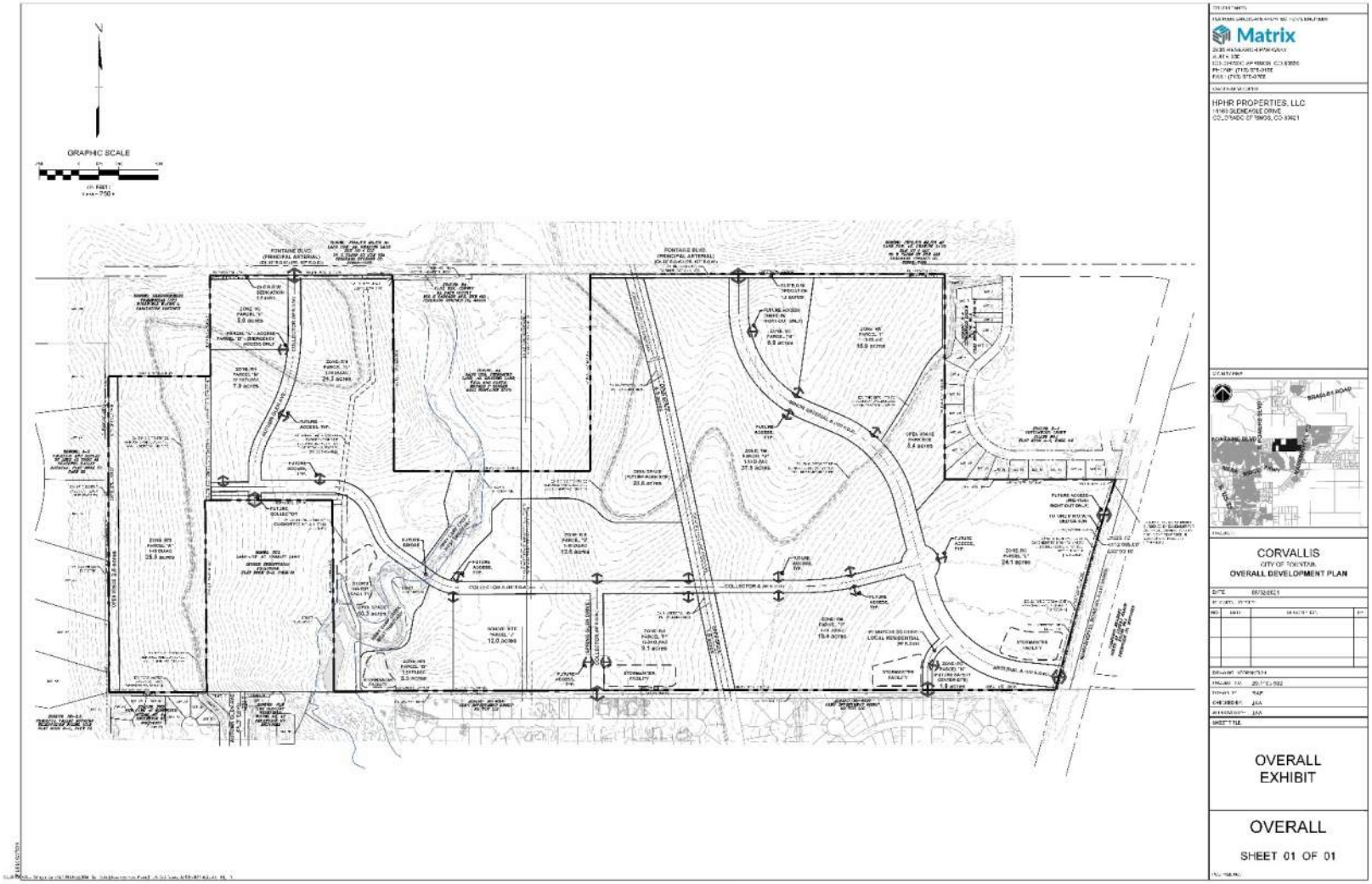

Trip Generation

Vehicle trips associated with Corvallis were calculated using the Institute of Transportation Engineers (ITE) *Trip Generation Manual, Tenth Edition*. This methodology consists of choosing an independent variable for the land use for a particular time of day (e.g. AM or PM peak hours). The independent variable correlates to the variation in trip ends and is related to the land use. The value of the independent variable is either multiplied by a weighted average or used in a regression equation to calculate the trips generated by the land use. The *ITE Trip Generation Manual* provides guidance on when to use the weighted average versus the regression equation. In most cases, the regression equations are recommended when there are adequate study data points.

To determine the number of dwelling units (DU) for the single-family and multifamily residential, the average number of DU/acre was multiplied by the size of the parcel in acres. ITE land use code 210 was used for "single-family detached housing" and code 220 was used for "multifamily housing (low-rise)." The commercial parcels do not have specific land use types at this stage, so they were assumed to be retail shopping centers and land use code 820 "shopping center" was used. This land use uses "1,000 square foot gross leasable area" (KSF GLA) as its independent variable, which was estimated as 25% of the total area of the parcel. School trip generation is generally calculated using the number of estimated students. Because this isn't known at this time, the independent variable "1,000 square foot gross floor area" (KSF GFA) was used. It was estimated that 15% of the total parcel area would be usable square footage. The school land use code is 520.

Internal trips and pass-by traffic were calculated using standard recommended values from the *ITE Trip Generation Handbook*. In general, the residential and commercial trips will be reduced by a certain percentage due to internal capture within the mixed-use development, while the commercial land uses will draw a certain amount of pass-by traffic from vehicles already on the external roadways. Values in Table 5 show the trips that are expected to be generated by Corvallis at build out, taking into account the influences of internally-generated trips and pass-by traffic. The trip generation tables in Appendix C show the exact percentages and which parcels were affected by these calculations.

Trip Distribution

Site trips were distributed along the existing and future roadway network based on current traffic volumes, projected traffic trends/growth, and assumptions made for adjacent similar developments in nearby traffic impact studies. The majority of traffic will travel to/from the southwest. The school traffic will mostly occur from the proposed Corvallis residential parcels as well as The Glen at Widefield development to the south, meaning that most of the trip ends from that parcel will utilize interior roads within the development. The remaining trips are assumed to move throughout the roadway network proportionally to measured traffic counts.

Figure 5 shows the expected external and internal trip distribution of travel for the site-generated trips. The trip distribution is mostly similar between the 2030 and 2040 projections; however some traffic will shift to head east at Mesa Ridge Pkwy once it is constructed to the east of Marksheffel Rd.

Table 5 - Corvallis Trip Generation

Parcel Name	DU	Land Use	AM VEHICLE TRIPS			PM VEHICLE TRIPS			DAILY VEHICLE TRIPS		
			Entry	Exit	Total	Entry	Exit	Total	Entry	Exit	Total
Single Family Residential											
Res A	135	210 - Single-Family Detached Housing	25	75	100	81	49	130	685	685	1370
Res C	140	210(1) - Single-Family Detached Housing	26	78	104	84	51	135	709	709	1418
Res D	53	210(2) - Single-Family Detached Housing	11	32	43	35	20	55	290	290	580
Res E	120	210(3) - Single-Family Detached Housing	22	68	90	72	45	117	615	615	1230
Res G	102	210(5) - Single-Family Detached Housing	19	58	77	61	38	99	529	529	1058
Res H	193	210(6) - Single-Family Detached Housing	35	106	141	116	70	186	952	952	1904
Res I	117	210(4) - Single-Family Detached Housing	22	66	88	70	44	114	601	601	1202
TOTAL SINGLE FAMILY DU	**860**	**SIGNLE FAMILY RESIDENTIAL TRIPS**	**160**	**483**	**643**	**519**	**317**	**836**	**4381**	**4381**	**8762**
Multi Family Residential											
Res B	140	220 - Multifamily Housing (Low-Rise)	15	51	66	46	29	75	509	509	1018
Res I	180	220(1) - Multifamily Housing (Low-Rise)	19	64	83	59	37	96	660	660	1320
TOTAL MULTIFAMILY DU	**320**	**MULTIFAMILY RESIDENTIAL TRIPS**	**34**	**115**	**149**	**105**	**66**	**171**	**1169**	**1169**	**2338**
Commercial - Retail											
Com K	21	820 - Shopping Center	101	62	163	32	32	64	1040	1040	2080
Com L	263	820(1) - Shopping Center	176	108	284	210	225	435	5802	5802	11604
Com M	55	820(2) - Shopping Center	111	68	179	66	69	135	2002	2002	4004
Com N	55	820(3) - Shopping Center	111	68	179	66	69	135	2002	2002	4004
TOTAL COMMERCIAL KSF GLA	**394**	**COMMERCIAL TRIPS**	**499**	**306**	**805**	**374**	**395**	**769**	**10846**	**10846**	**21692**
School											
School	79	520 - Elementary School	303	248	551	49	60	109	771	771	1542
TOTAL SCHOOL KSF GFA	**79**	**SCHOOL TRIPS**	**303**	**248**	**551**	**49**	**60**	**109**	**771**	**771**	**1542**
		GRAND TOTAL	**996**	**1152**	**2148**	**1047**	**838**	**1885**	**17167**	**17167**	**34334**

Figure 5 - Corvallis Site Trips & Trip Distribution

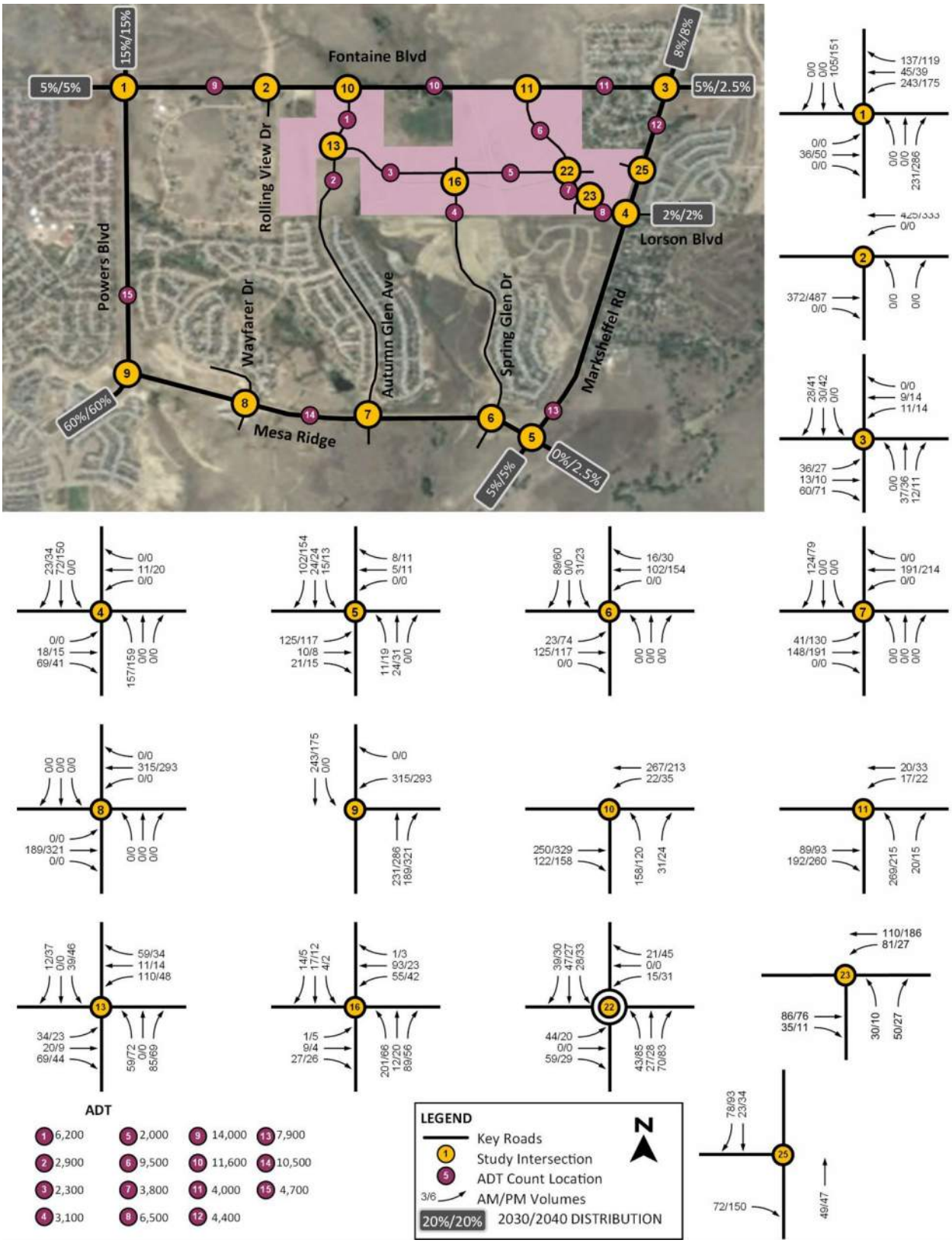

4.0 Traffic Analysis

Traffic conditions both with and without the project have been analyzed for the buildout year of 2030 and the horizon year of 2040. It was assumed that adjacent developments scheduled to be constructed prior to 2030 will have been constructed to their buildout volumes. The most consistent analysis period in common between this study and the adjacent developments was the 2040 horizon year. In order to establish consistent background traffic volumes, the traffic volumes were grown from the 2020 counts at a growth rate of 2.3%, which was calculated from volumes from the previous studies. Volumes were grown from 2020 to 2040 and then compared to the 2040 total traffic volumes from the previous studies, as available (not all of the intersections in this study were part of previous studies). The larger of the grown volumes or the total volumes from previous studies were used in order to get a conservative estimate of the Corvallis background traffic volumes. These 2040 volumes were then back calculated to 2030 in order to provide an estimate that considers the adjacent development volumes which were calculated in the previous studies for many different years (no prior study had an analysis for 2030 but all had an analysis for the horizon year of 2040).

2030 Buildout Year Traffic Analysis

The calculated 2030 background volumes were used to analyze the no-build scenario and site trips were added to this background to analyze the “with project” (total traffic) scenario. This analysis also takes into consideration any roadway improvements which are anticipated to be in place during this time.

No-Build (Background Traffic)

Figure 6 shows the background traffic volumes for the no-build scenario. Table 6 shows the LOS analysis and Table 7 shows the available storage and 95th percentile queue lengths for the study intersections. The full analysis software printout is provided in Appendix D.

The Powers Boulevard/Mesa Ridge Parkway intersection experiences an intersection LOS F and approach LOS E for the westbound and LOS F northbound in the PM peak hour. This intersection is designated to become a traffic interchange per the El Paso County 2016 Major Transportation Corridors Plan Update. In the meantime, mitigation measures were tested to see if the intersection LOS could be improved. Reconstructing the northbound right turn to be a free right turn and changing the phasing for the westbound right turn to allow overlap with the southbound left improves the intersection to LOS C, westbound approach to LOS C, and northbound to LOS D in the PM peak hour. These mitigation measures eliminate the excessive queue length for the northbound right turn.

The Marksheffel Road/Fontaine Boulevard intersection experiences some left turn movement LOS that are unacceptable in the PM peak. The southbound shared left/through lane experiences LOS E during the PM, but the approaches and overall intersections are acceptable, so no mitigation is necessary at this time.

Figure 6 - Buildout Year (2030) Background Traffic without Project

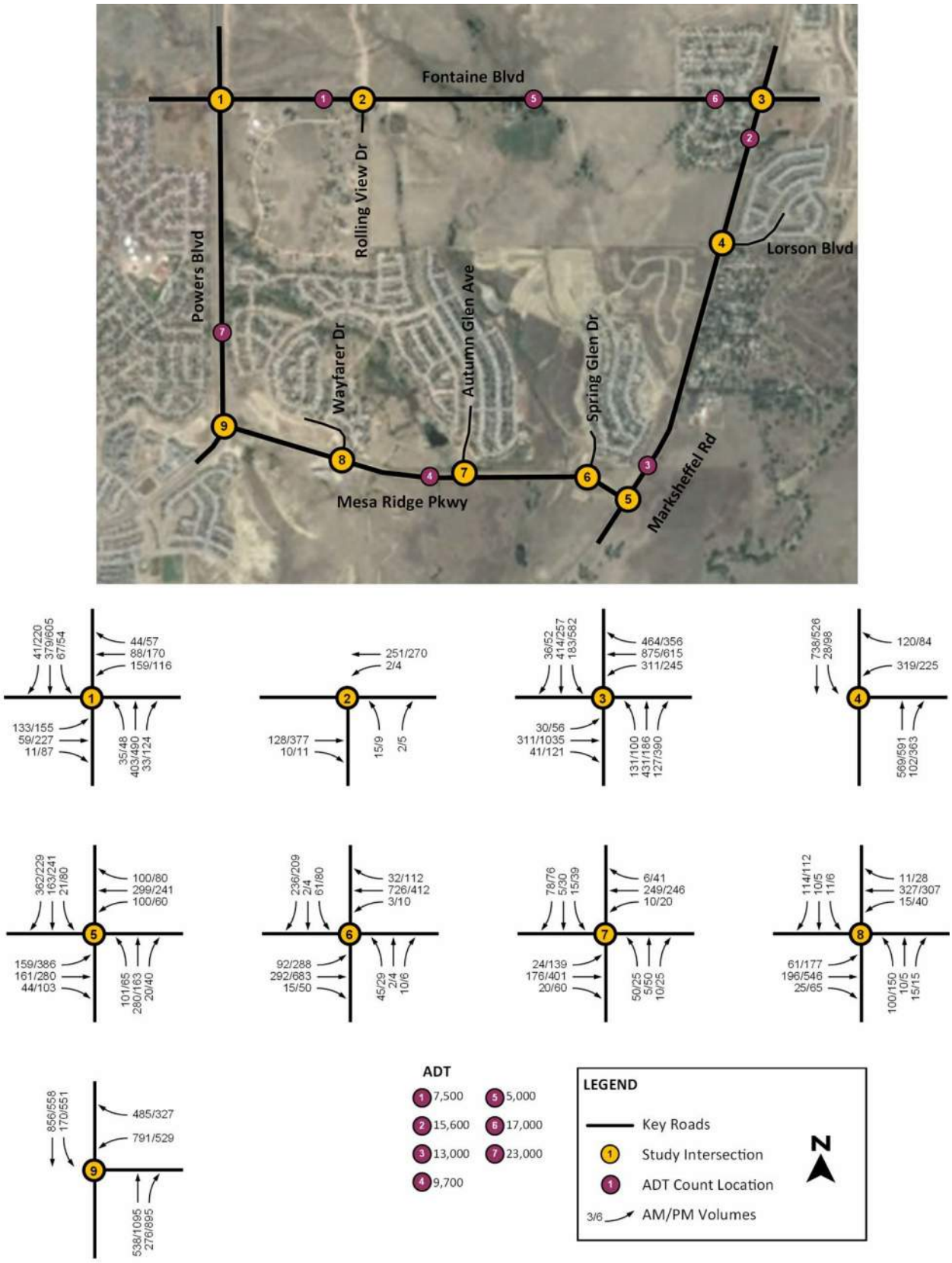

Table 6 - Buildout Year (2030) Background LOS without Project

			AM Peak Hour Results					PM Peak Hour Results				
Int ID	Intersection	Control	Int LOS	Appr	Appr LOS	Mvmt	Mvmt LOS	Int LOS	Appr	Appr LOS	Mvmt	Mvmt LOS
1	Powers & Fontaine	Signalized	B	EB	B	EBL	B	B	EB	C	EBL	B
						EBT	C				EBT	C
						EBR	A				EBR	A
				WB	B	WBL	B		WB	C	WBL	B
						WBT	C				WBT	C
						WBR	A				WBR	A
				NB	B	NBL	A		NB	B	NBL	A
						NBT	B				NBT	B
						NBR	A				NBR	A
				SB	B	SBL	A		SB	B	SBL	A
						SBT	B				SBT	B
						SBR	A				SBR	A
2	Rolling View & Fontaine	TWSC	B	EB	-	EBT	-	B	EB	-	EBT	-
						EBR	-				EBR	-
				WB	-	WBL	A		WB	-	WBL	A
						WBT	-				WBT	-
				NB	B	NBLR	B		NB	B	NBLR	B
3	Marksheffel & Fontaine	Signalized	C	EB	C	EBL	D	D	EB	D	EBL	E
						EBT	C				EBT	D
						EBR	A				EBR	A
				WB	C	WBL	D		WB	D	WBL	F
						WBT	C				WBT	C
						WBR	A				WBR	A
				NB	C	NBL	D		NB	D	NBL	E
						NBT	C				NBT	D
						NBR	A				NBR	A
				SB	C	SBL	D		SB	D	SBL	E
						SBT	C				SBT	C
						SBR	A				SBR	A
4	Marksheffel & Lorson	Signalized	A	WB	B	WBL	B	A	WB	B	WBL	B
						WBR	A				WBR	B
				NB	A	NBT	A		NB	A	NBT	A
						NBR	A				NBR	A
				SB	A	SBL	A		SB	A	SBL	A
						SBT	A				SBT	A
5	Marksheffel & Mesa Ridge	Signalized	A	EB	A	EBL	A	A	EB	A	EBL	A
						EBT	A				EBT	A
						EBR	A				EBR	A
				WB	A	WBL	A		WB	A	WBL	A
						WBT	A				WBT	A
						WBR	A				WBR	A
				NB	A	NBL	A		NB	B	NBL	B
						NBT	A				NBT	B
						NBR	A				NBR	B
				SB	A	SBL	A		SB	B	SBL	B
						SBT	A				SBT	B
						SBR	B				SBR	B
6	Spring Glen & Mesa Ridge	Signalized	B	EB	B	EBL	C	B	EB	B	EBL	C
						EBT	B				EBT	B

			AM Peak Hour Results					PM Peak Hour Results				
Int ID	Intersection	Control	Int LOS	Appr	Appr LOS	Mvmt	Mvmt LOS	Int LOS	Appr	Appr LOS	Mvmt	Mvmt LOS
						EBR	B				EBR	B
				WB	B	WBL	B		WB	B	WBL	B
						WBT	B				WBT	B
						WBR	B				WBR	B
				NB	C	NBLT	C		NB	C	NBLT	C
						NBR	A				NBR	B
				SB	B	SBLT	C		SB	C	SBLT	E
						SBR	B				SBR	B
7	Autumn Glen & Mesa Ridge	Signalized	A	EB	A	EBL	A	A	EB	A	EBL	A
						EBT	A				EBT	A
						EBR	A				EBR	A
				WB	A	WBL	A		WB	A	WBL	A
						WBT	A				WBT	A
						WBR	A				WBR	A
				NB	A	NBL	A		NB	A	NBL	A
						NBT	A				NBT	A
						NBR	A				NBR	A
				SB	A	SBL	A		SB	A	SBL	A
						SBT	A				SBT	A
						SBR	A				SBR	A
8	Wayfarer & Mesa Ridge	Signalized	A	EB	A	EBL	A	A	EB	A	EBL	A
						EBT	A				EBT	A
						EBR	A				EBR	A
				WB	A	WBL	A		WB	A	WBL	A
						WBT	A				WBT	A
						WBR	A				WBR	A
				NB	A	NBL	A		NB	A	NBL	A
						NBT	A				NBT	A
						NBR	A				NBR	A
				SB	A	SBL	A		SB	A	SBL	A
						SBT	A				SBT	A
						SBR	A				SBR	A
9	Powers & Mesa Ridge	Signalized	C	WB	D	WBL	C	F	WB	E	WBL	D
						WBR	F				WBR	F
				NB	B	NBT	B		NB	F	NBT	C
						NBR	B				NBR	F
				SB	A	SBL	B		SB	D	SBL	F
						SBT	A				SBT	A
9	Powers & Mesa Ridge Mitigated	Signalized	B	WB	C	WBL	C	C	WB	C	WBL	D
						WBR	C				WBR	B
				NB	B	NBT	B		NB	D	NBT	D
						NBR	A				NBR	A
				SB	A	SBL	A		SB	C	SBL	D
						SBT	A				SBT	A

Table 7 - Buildout Year (2030) Background 95th Percentile Queue Length without Project

				AM Peak Hour	PM Peak Hour
Int ID	Intersection	Movement	Turn Lane Storage (ft)	Queue Length (ft)	Queue Length (ft)
1	Powers & Fontaine	EBL	235	73	83
		EBT		24	71
		EBR	450	0	19
		WBL	200	86	64
		WBT		33	55
		WBR	400	0	3
		NBL	700	17	24
		NBT		90	119
		NBR	600	0	31
		SBL		27	27
		SBT		82	149
		SBR	490	0	40
2	Rolling View & Fontaine	EBT		-	-
		EBR	235	-	-
		WBL	235	0	0
		WBT		-	-
		NBLR		3	3
3	Marksheffel & Fontaine	EBL	235	26	48
		EBT		130	595
		EBR	235	0	36
		WBL		152	190
		WBT		336	270
		WBR		166	59
		NBL	455	76	75
		NBT		176	104
		NBR	455	31	0
		SBL	385	101	365
		SBT		166	113
		SBR	385	0	8
4	Marksheffel & Lorson	WBL	250	154	100
		WBR		26	22
		NBT		105	82
		NBR	250	22	32
		SBL	400	19	43
		SBT		142	72
5	Marksheffel & Mesa Ridge	EBL	300	65	199
		EBT		25	40
		EBR	275	12	17
		WBL	300	39	25
		WBT		43	35
		WBR	275	19	15
		NBL	300	45	47
		NBT		47	44
		NBR	275	9	19
		SBL	300	14	54
		SBT		30	62
		SBR	500	40	44
6	Spring Glen & Mesa Ridge	EBL	485	46	120
		EBT		43	78
		EBR	275	6	10

				AM Peak Hour	PM Peak Hour
Int ID	Intersection	Movement	Turn Lane Storage (ft)	Queue Length (ft)	Queue Length (ft)
		WBL	235	3	6
		WBT		110	46
		WBR	275	10	15
		NBLT		29	25
		NBR		5	3
		SBLT		37	51
		SBR		85	40
7	Autumn Glen & Mesa Ridge	EBL	325	8	34
		EBT		15	35
		EBR	275	5	9
		WBL	275	5	8
		WBT		21	22
		WBR	275	1	8
		NBL	250	15	15
		NBT		1	11
		NBR	275	3	10
		SBL	250	6	20
		SBT		1	8
		SBR	275	11	18
8	Wayfarer & Mesa Ridge	EBL	300	19	65
		EBT		21	70
		EBR	275	7	13
		WBL	275	7	18
		WBT		33	40
		WBR	250	3	9
		NBL	275	30	70
		NBT		6	6
		NBR	275	5	7
		SBL	275	6	7
		SBT		6	6
		SBR	125	16	25
9	Powers & Mesa Ridge	WBL	325	233	244
		WBR		183	73
		NBT		120	450
		NBR	150	41	649
		SBL	1000	59	542
		SBT		140	76
9	Powers & Mesa Ridge Mitigated	WBL	325	235	244
		WBR		184	175
		NBT		125	470
		NBR	150	0	0
		SBL	1000	58	523
		SBT		138	76

Figure 7 shows the lane configurations and traffic control for the 2030 background traffic scenario.

Figure 7 - 2030 Background Lane Configurations & Traffic Control

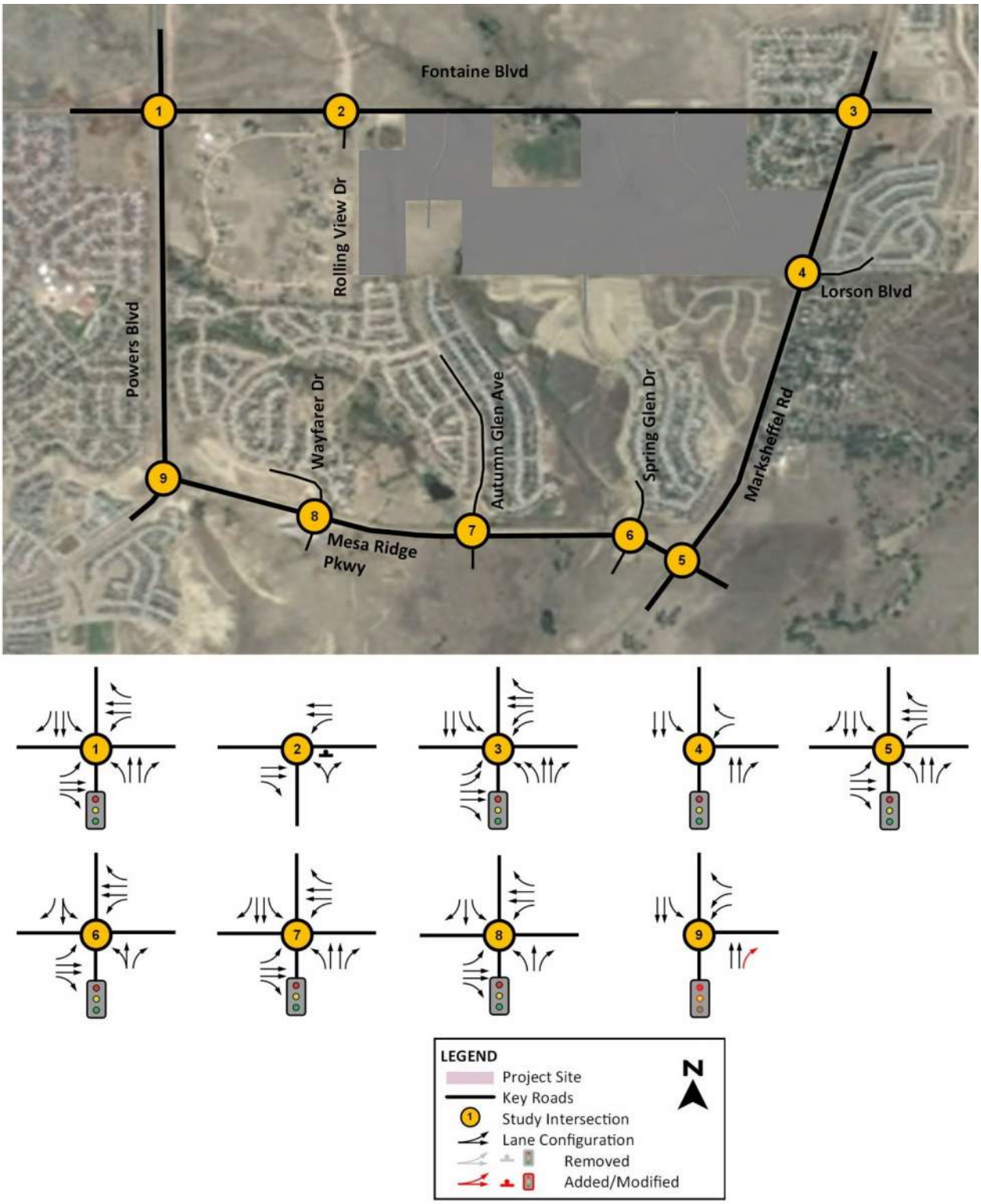

With Project (Total Traffic)

Figure 8 shows the total traffic volumes which include the Corvallis site-generated trips added into the previously calculated background volumes. Table 8 shows the LOS results and Table 9 shows the storage

and 95th percentile queue lengths for the study intersections. The full analysis software printout is provided in Appendix E. Figure 9 shows the road lane configurations and traffic control for the 2030 background traffic and 2030 total traffic, as well as any required lane/traffic control mitigations.

By 2030, the Marksheffel Road/Fontaine Boulevard intersection is beginning to experience LOS E and LOS F left turn movements during the PM peak hour. The site traffic from Corvallis appears to just barely tip this intersection into an unacceptable LOS condition. Corvallis will have to provide a fair share contribution towards the improvements at this intersection.

The following intersections have unsatisfactory approach or intersection LOS during the PM peak hour, prior to mitigation:

- Marksheffel Road/Fontaine Boulevard
    - All left turn movements are LOS E or LOS F
    - Eastbound and southbound approaches are LOS E
- Spring Glen Drive/Mesa Ridge Parkway
    - The southbound shared left/through lane has an LOS E which causes the southbound leg to be deficient
- Powers Boulevard/Mesa Ridge Parkway
    - Overall intersection and all three approaches are LOS F

The following actions were investigated and found to mitigate the unacceptable LOS condition for each intersection:

- Marksheffel Road/Fontaine Boulevard
    - All right turn movements were coded to overlap with the non-conflicting left-turn phases
    - Converted northbound free right turn to yield to allow for adding an eastbound through lane (this will provide three receiving lanes east of Marksheffel Road)
- Spring Glen Drive/Mesa Ridge Pkwy
    - Existing traffic impact studies for The Glen at Widefield show this intersection as a four-leg with northbound and southbound shared left/through lanes and exclusive right turn lanes. This intersection is currently only an unsignalized three-leg and is not striped for this configuration. Recommend that this intersection be constructed with exclusive left-turn lanes and shared through/right-turn lanes
- The Powers Boulevard/Mesa Ridge Parkway intersection will be improved to a traffic interchange at a future date.

Fair Share Contributions

Corvallis will need to make a fair share contribution towards roadway improvements that are directly or partially the result of the project traffic. It should be noted that these three intersections with deficiencies will all require the same mitigations by the 2040 horizon year due to background growth. Fair share contributions should be considered based on the proportion of the traffic the development adds to the intersection.

The Corvallis development will contribute about 4% additional traffic to the background Marksheffel Road/Fontaine Boulevard intersection in 2030:

AM Peak Hour: 270 site trips / 3,624 total trips x 100% = 7.5% Average: 7.3%

PM Peak Hour: 310 site trips / 4,305 total trips x 100% = 7.2%

The Spring Glen Drive/Mesa Ridge Parkway intersection is not constructed to its ultimate four-leg configuration. It is recommended that instead of constructing this intersection with shared left/through lanes and exclusive right turn lanes, it be constructed with exclusive left turn lanes and shared through/right lanes. This modification will add no additional cost to the construction of the intersection.

The Corvallis development will contribute approximately 20% additional traffic to the background traffic at Powers Boulevard/Mesa Ridge Parkway in 2030:

AM Peak Hour: 371 site trips / 1,887 total trips x 100% = 19.7%
PM Peak Hour: 441 site trips / 2,328 total trips x 100% = 18.9%

Average: 19.3%

Site Access Design

Three accesses to the site will be newly constructed; the remainder will tie into existing facilities or will be constructed by others at a future date. The three accesses are

- (Intersection ID 10) Tee intersection at Fontaine Boulevard/Spring Glen Avenue
  - City of Colorado Springs Engineering Criteria Manual applies to this intersection
  - EB right-turn lane and WB left-turn lane on Fontaine Boulevard should be constructed for a 45 mph design speed and have a lane length of 200’ and approach taper of 180’
  - NB left-turn lane on Spring Glen Avenue should be constructed for a 40 mph design speed and have a lane length of 155’ and approach taper of 160’
- (Intersection ID 11) Tee intersection at Fontaine Boulevard/Minor Arterial A
  - City of Colorado Springs Engineering Criteria Manual applies to this intersection
  - EB right-turn lane and WB left-turn lane on Fontaine Boulevard should be constructed for a 45 mph design speed and have a lane length of 200’ and approach taper of 180’
  - NB left-turn lane on Spring Glen Avenue should be constructed for a 40 mph design speed and have a lane length of 155’ and approach taper of 160’
- (Intersection ID 25) Right-in/Right-out access from Marksheffel Road south of Fontaine Boulevard and north of Lorson Boulevard.
  - El Paso County Engineering Criteria Manual applies to this intersection
  - SB right turn lane on Marksheffel Road should be constructed for a 60 mph design speed and have a lane length of 290’ and approach taper of 240’

Figure 8 - Buildout Year (2030) Total Traffic with Project

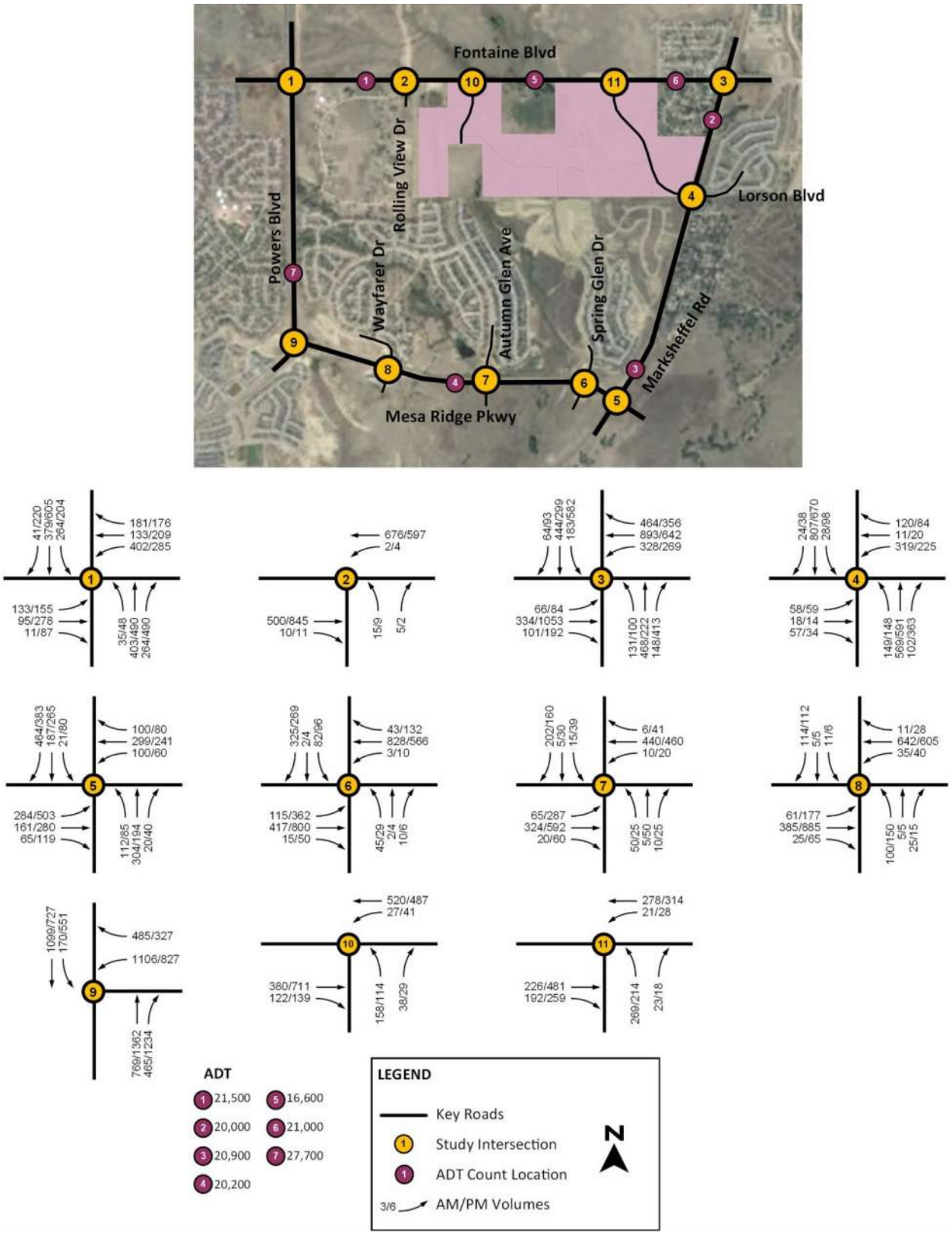

Table 8 - Buildout Year (2030) Total LOS with Project

			AM Peak Hour Results					PM Peak Hour Results				
Int ID	Intersection	Control	Int LOS	Appr	Appr LOS	Mvmt	Mvmt LOS	Int LOS	Appr	Appr LOS	Mvmt	Mvmt LOS
1	Powers & Fontaine	Signalized	C	EB	C	EBL	C	C	EB	C	EBL	C
						EBT	C				EBT	C
						EBR	A				EBR	A
				WB	C	WBL	C		WB	C	WBL	C
						WBT	C				WBT	C
						WBR	A				WBR	A
				NB	B	NBL	B		NB	B	NBL	B
						NBT	B				NBT	B
						NBR	A				NBR	A
				SB	B	SBL	B		SB	B	SBL	B
						SBT	B				SBT	B
						SBR	A				SBR	A
2	Rolling View & Fontaine	TWSC	C	EB	-	EBT	-	C	EB	-	EBT	-
						EBR	-				EBR	-
				WB	-	WBL	A		WB	-	WBL	A
						WBT	-				WBT	-
				NB	C	NBLR	C		NB	C	NBLR	C
3	Marksheffel & Fontaine	Signalized	C	EB	C	EBL	D	D	EB	E	EBL	E
						EBT	C				EBT	E
						EBR	A				EBR	A
				WB	C	WBL	D		WB	D	WBL	F
						WBT	C				WBT	C
						WBR	A				WBR	A
				NB	C	NBL	D		NB	D	NBL	E
						NBT	C				NBT	D
						NBR	A				NBR	A
				SB	C	SBL	D		SB	E	SBL	E
						SBT	C				SBT	C
						SBR	A				SBR	A
3	Marksheffel & Fontaine Mitigated	Signalized	D	EB	D	EBL	D	D	EB	D	EBL	E
						EBT	C				EBT	D
						EBR	A				EBR	A
				WB	D	WBL	D		WB	D	WBL	E
						WBT	D				WBT	C
						WBR	A				WBR	A
				NB	C	NBL	D		NB	D	NBL	E
						NBT	C				NBT	C
						NBR	A				NBR	A
				SB	C	SBL	D		SB	D	SBL	D
						SBT	C				SBT	C
						SBR	A				SBR	A
4	Marksheffel & Lorson	Signalized	B	WB	B	EBL	B	A	WB	B	EBL	B
						EBTR	B				EBTR	A
				WB	B	WBL	B		WB	B	WBL	B
						WBTR	A				WBTR	B
				NB	A	NBL	B		NB	A	NBL	A
						NBT	A				NBT	A
						NBR	A				NBR	A
				SB	A	SBL	A		SB	A	SBL	A

			AM Peak Hour Results					PM Peak Hour Results				
Int ID	Intersection	Control	Int LOS	Appr	Appr LOS	Mvmt	Mvmt LOS	Int LOS	Appr	Appr LOS	Mvmt	Mvmt LOS
						SBT	A				SBT	A
						SBR	A				SBR	A
5	Marksheffel & Mesa Ridge	Signalized	B	EB	B	EBL	C	B	EB	B	EBL	B
						EBT	A				EBT	A
						EBR	A				EBR	A
				WB	B	WBL	B		WB	B	WBL	B
						WBT	B				WBT	B
						WBR	B				WBR	B
				NB	B	NBL	B		NB	B	NBL	B
						NBT	A				NBT	B
						NBR	A				NBR	B
				SB	B	SBL	B		SB	B	SBL	B
						SBT	A				SBT	B
						SBR	B				SBR	B
6	Spring Glen & Mesa Ridge	Signalized	B	EB	B	EBL	C	C	EB	C	EBL	D
						EBT	B				EBT	B
						EBR	B				EBR	A
				WB	B	WBL	B		WB	A	WBL	B
						WBT	B				WBT	A
						WBR	B				WBR	A
				NB	C	NBLT	C		NB	D	NBLT	D
						NBR	B				NBR	C
				SB	C	SBLT	E		SB	F	SBLT	F
						SBR	B				SBR	C
6	Spring Glen & Mesa Ridge Mitigated	Signalized	A	EB	A	EBL	B	B	EB	B	EBL	C
						EBT	A				EBT	A
						EBR	A				EBR	A
				WB	A	WBL	A		WB	A	WBL	A
						WBT	A				WBT	A
						WBR	A				WBR	A
				NB	B	NBL	B		NB	C	NBLT	C
						NBTR	B				NBR	C
				SB	B	SBL	B		SB	C	SBL	C
						SBTR	B				SBTR	C
7	Autumn Glen & Mesa Ridge	Signalized	A	EB	A	EBL	A	A	EB	A	EBL	A
						EBT	A				EBT	A
						EBR	A				EBR	A
				WB	A	WBL	A		WB	A	WBL	A
						WBT	A				WBT	A
						WBR	A				WBR	A
				NB	A	NBL	A		NB	B	NBL	B
						NBT	A				NBT	B
						NBR	A				NBR	B
				SB	A	SBL	A		SB	B	SBL	B
						SBT	A				SBT	B
						SBR	A				SBR	B
8	Wayfarer & Mesa Ridge	Signalized	A	EB	A	EBL	A	A	EB	A	EBL	A
						EBT	A				EBT	A
						EBR	A				EBR	A
				WB	A	WBL	A		WB	A	WBL	A

			AM Peak Hour Results					PM Peak Hour Results				
Int ID	Intersection	Control	Int LOS	Appr	Appr LOS	Mvmt	Mvmt LOS	Int LOS	Appr	Appr LOS	Mvmt	Mvmt LOS
						WBT	A				WBT	A
						WBR	A				WBR	A
				NB	A	NBL	A		NB	B	NBL	B
						NBT	A				NBT	B
						NBR	A				NBR	B
				SB	A	SBL	A		SB	B	SBL	B
						SBT	A				SBT	B
						SBR	A				SBR	B
9	Powers & Mesa Ridge	Signalized	C	WB	C	WBL	C	E	WB	E	WBL	F
						WBR	B				WBR	B
				NB	C	NBT	C		NB	F	NBT	F
						NBR	A				NBR	A
				SB	B	SBL	B		SB	E	SBL	F
						SBT	B				SBT	A
10	Autumn Glen & Fontaine	TWSC	C	EB	A	EBT	-	D	EB	-	EBT	-
						EBR	-				EBR	-
				WB	A	WBL	A		WB	-	WBL	A
						WBT	-				WBT	-
				NB	C	NBL	C		NB	D	NBL	E
						NBR	A				NBR	B
11	Community Arterial A & Fontaine	TWSC	C	EB	-	EBT	-	D	EB	-	EBT	-
						EBR	-				EBR	-
				WB	-	WBL	A		WB	-	WBL	A
						WBT	-				WBT	-
				NB	C	NBL	C		NB	D	NBL	D
						NBR	A				NBR	A

Table 9 - Buildout Year (2030) Total Traffic 95th Percentile Queue Lengths with Project

				AM Peak Hour	PM Peak Hour
Int ID	**Intersection**	**Movement**	**Turn Lane Storage (ft)**	**Queue Length (ft)**	**Queue Length (ft)**
1	Powers & Fontaine	EBL	235	83	99
		EBT		47	107
		EBR	450	0	8
		WBL	200 - **Propose 400**	281	176
		WBT		51	77
		WBR	400	48	49
		NBL	700	24	30
		NBT		136	164
		NBR	600	55	64
		SBL		88	102
		SBT		110	177
		SBR	490	0	43
2	Rolling View & Fontaine	EBT		-	-
		EBR	235	-	-
		WBL	235	0	0
		WBT		-	-
		NBLR		5	5
3	Marksheffel & Fontaine	EBL	235	46	68
		EBT		138	646
		EBR	235	14	86
		WBL		160	208
		WBT		349	300
		WBR		203	64
		NBL	455	76	78
		NBT		192	127
		NBR	455	45	450
		SBL	385	101	387
		SBT		179	137
		SBR	385	0	24
3	Marksheffel & Fontaine Mitigated	EBL	235	53	63
		EBT		113	373
		EBR	235	24	50
		WBL		186	161
		WBT		426	306
		WBR		305	86
		NBL	455	89	72
		NBT		223	116
		NBR	455	35	334
		SBL	385	111	328
		SBT		192	121
		SBR	385	16	31
4	Marksheffel & Lorson	EBL		33	30
		EBTR		24	18
		WBL	250	165	98
		WBTR		29	27
		NBL	250	129	74
		NBT		112	90
		NBR	250	2	36
		SBL	400	20	45
		SBT		166	103

				AM Peak Hour	PM Peak Hour
Int ID	Intersection	Movement	Turn Lane Storage (ft)	Queue Length (ft)	Queue Length (ft)
		SBR	200	11	12
5	Marksheffel & Mesa Ridge	EBL	300	104	148
		EBT		29	46
		EBR	275	16	20
		WBL	300	66	54
		WBT		75	77
		WBR	275	29	31
		NBL	300	68	63
		NBT		70	56
		NBR	275	0	11
		SBL	300	19	59
		SBT		46	74
		SBR	500	59	57
6	Spring Glen & Mesa Ridge	EBL	485	106	303
		EBT		80	114
		EBR	275	7	10
		WBL	235	5	7
		WBT		173	76
		WBR	275	15	16
		NBLT		30	39
		NBR		5	5
		SBLT		47	92
		SBR	235	145	68
6	Spring Glen & Mesa Ridge Mitigated	EBL	485	88	291
		EBT		84	116
		EBR	275	7	11
		WBL	235	4	7
		WBT		181	77
		WBR	275	14	17
		NBL	235	42	32
		NBTR		12	12
		SBL	235	63	76
		SBTR		175	78
7	Autumn Glen & Mesa Ridge	EBL	325	19	110
		EBT		30	58
		EBR	275	5	9
		WBL	275	5	8
		WBT		40	45
		WBR	275	2	8
		NBL	250	17	22
		NBT		2	17
		NBR	275	3	15
		SBL	250	8	31
		SBT		2	12
		SBR	275	23	39
8	Wayfarer & Mesa Ridge	EBL	300	22	79
		EBT		41	121
		EBR	275	7	12
		WBL	275	13	18
		WBT		71	76
		WBR	250	3	8

				AM Peak Hour	PM Peak Hour
Int ID	Intersection	Movement	Turn Lane Storage (ft)	Queue Length (ft)	Queue Length (ft)
		NBL	275	44	67
		NBT		6	6
		NBR	275	11	7
		SBL	275	10	7
		SBT		6	6
		SBR	125	33	29
9	Powers & Mesa Ridge	WBL	325	378	511
		WBR		226	225
		NBT		224	825
		NBR	150	0	0
		SBL	1000	100	731
		SBT		263	156
10	Autumn Glen & Fontaine	EBT		-	-
		EBR	235	-	-
		WBL	235	3	5
		WBT		-	-
		NBL	200	53	70
		NBR		3	3
11	Community Arterial A & Fontaine	EBT		-	-
		EBR	235	-	-
		WBL	235	3	3
		WBT		-	-
		NBL	200	65	90
		NBR		3	3

Figure 9 shows the lane configurations and traffic control for the 2030 total traffic scenario.

Figure 9 - 2030 Total Lane Configurations & Traffic Control

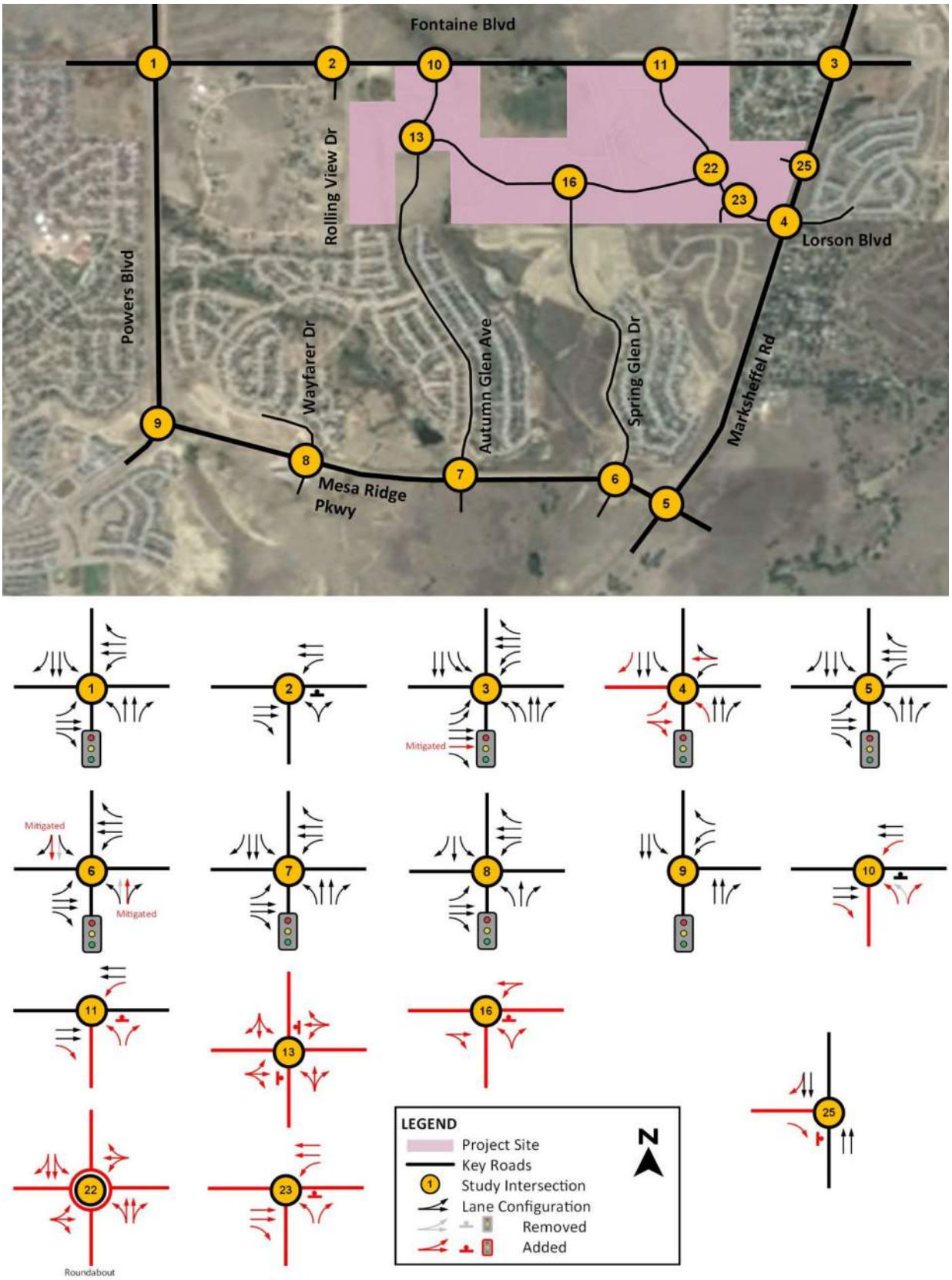

Horizon Year (2040) Traffic Analysis

The calculated 2040 background volumes were used to analyze the no-build scenario and site trips were added to this background to analyze the with project (total traffic) scenario. This analysis also takes into consideration any roadway improvements which are anticipated to be in place during this time.

No-Build (Background Traffic)

Figure 10 shows the background traffic volumes for the no-build scenario, in other words, with only the volumes grown from the existing counts or taken from the previous studies' total traffic volumes. Table 10 shows the LOS and Table 11 shows the 95th percentile queue lengths for the study intersections. The full analysis software printout is provided in Appendix F.

The specific intersection deficiencies in the 2040 background condition are the same intersections with deficiencies in the 2030 total condition:

- Marksheffel Road/Fontaine Boulevard
  - All left turn movements are LOS E or LOS F
  - Eastbound and southbound approaches are LOS E
- Spring Glen Drive/Mesa Ridge Parkway
  - The southbound shared left/through lane has LOS E which causes the southbound leg to be deficient
- Powers Boulevard/Mesa Ridge Parkway
  - Overall intersection and two of the three approaches are LOS F

The following actions were investigated and found to mitigate the unacceptable LOS condition for each intersection:

- Marksheffel Road/Fontaine Boulevard
  - All right turn movements were coded to overlap with the non-conflicting left-turn phases
  - Converted northbound free right turn to yield to allow for adding an eastbound through lane (this will provide three receiving lanes east of Marksheffel Rd)
  - Re-stripe the northbound and southbound two-way left turn lanes (TWLTL) to allow extending the northbound right and southbound left turn lanes—recommend increasing the northbound right lane to 600 feet from 455 feet and the southbound left turn lane to 500 feet from 385 feet
- Spring Glen Drive/Mesa Ridge Parkway
  - Existing traffic impact studies for The Glen at Widefield show this intersection as a four-leg with northbound and southbound shared left/through lanes and exclusive right turn lanes. This intersection is currently only an unsignalized three-leg and is not striped for this configuration. Recommend that this intersection be constructed with exclusive left-turn lanes and shared through/right-turn lanes
- The Powers Boulevard/Mesa Ridge Parkway intersection will be improved to a traffic interchange at a future date

All other intersections operated with an acceptable LOS.

Figure 10 - Horizon Year (2040) Background Traffic without Project

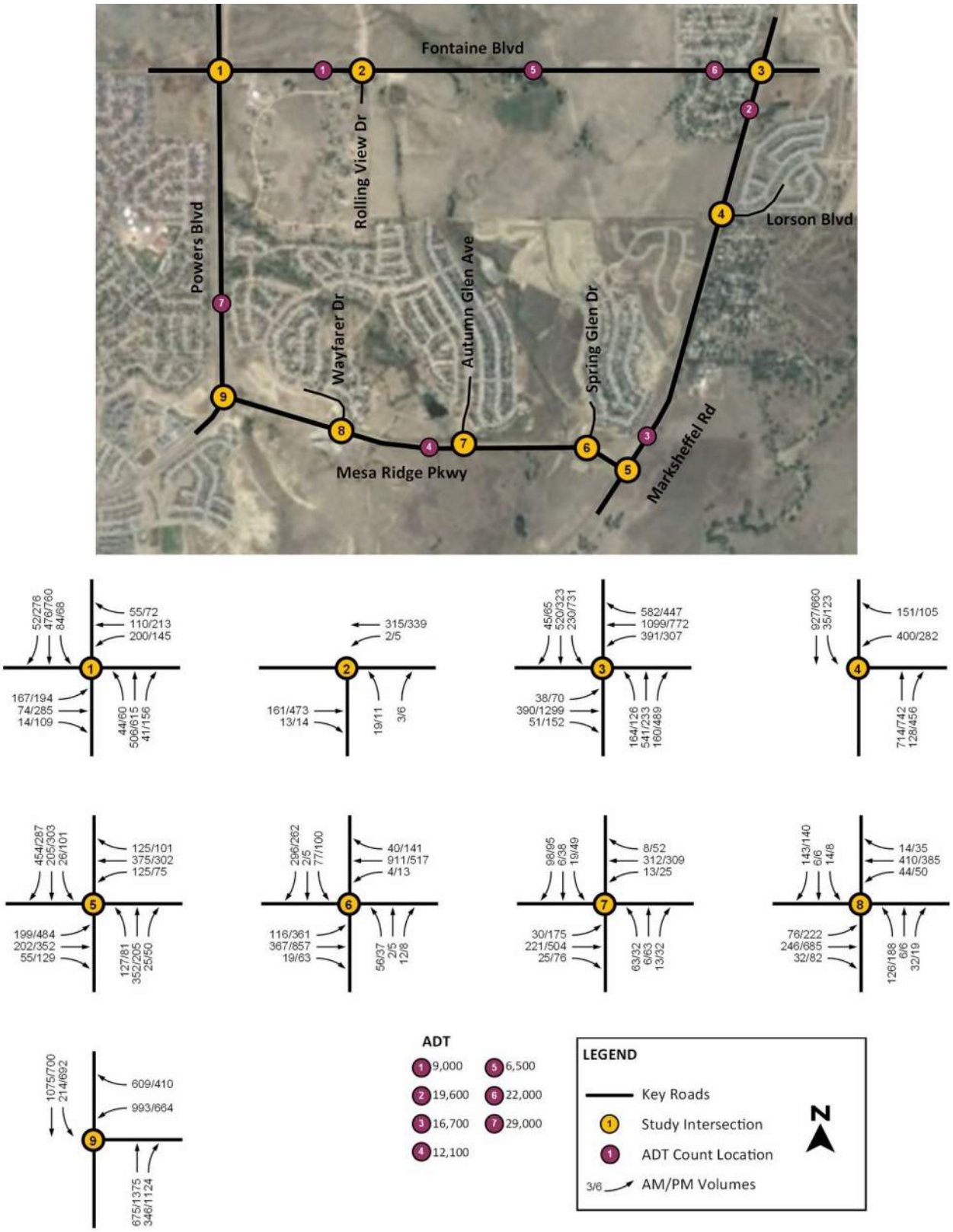

Table 10 - Horizon Year (2040) Background LOS without Project

			AM Peak Hour Results					PM Peak Hour Results				
Int ID	Intersection	Control	Int LOS	Appr	Appr LOS	Mvmt	Mvmt LOS	Int LOS	Appr	Appr LOS	Mvmt	Mvmt LOS
1	Powers & Fontaine	Signalized	B	EB	C	EBL	C	B	EB	C	EBL	C
						EBT	C				EBT	C
						EBR	A				EBR	A
				WB	C	WBL	C		WB	C	WBL	C
						WBT	C				WBT	C
						WBR	A				WBR	A
				NB	B	NBL	A		NB	B	NBL	A
						NBT	B				NBT	B
						NBR	A				NBR	A
				SB	B	SBL	A		SB	B	SBL	A
						SBT	B				SBT	B
						SBR	A				SBR	A
2	Rolling View & Fontaine	TWSC	B	EB	-	EBT	-	B	EB	-	EBT	-
						EBR	-				EBR	-
				WB	-	WBL	A		WB	-	WBL	A
						WBT	-				WBT	-
				NB	B	NBLR	B		NB	B	NBLR	B
3	Marksheffel & Fontaine	Signalized	D	EB	C	EBL	D	F	EB	F	EBL	E
						EBT	C				EBT	F
						EBR	A				EBR	A
				WB	D	WBL	D		WB	E	WBL	F
						WBT	C				WBT	C
						WBR	A				WBR	A
				NB	C	NBL	D		NB	E	NBL	E
						NBT	C				NBT	D
						NBR	A				NBR	A
				SB	C	SBL	D		SB	F	SBL	F
						SBT	C				SBT	C
						SBR	A				SBR	A
3	Marksheffel & Fontaine Mitigated	Signalized	D	EB	C	EBL	D	D	EB	D	EBL	E
						EBT	C				EBT	D
						EBR	A				EBR	A
				WB	D	WBL	D		WB	D	WBL	F
						WBT	C				WBT	D
						WBR	A				WBR	A
				NB	C	NBL	D		NB	D	NBL	E
						NBT	C				NBT	D
						NBR	A				NBR	A
				SB	D	SBL	E		SB	D	SBL	E
						SBT	C				SBT	C
						SBR	A				SBR	A
4	Marksheffel & Lorson	Signalized	A	WB	B	WBL	B	A	WB	B	WBL	B
						WBR	B				WBR	B
				NB	A	NBT	A		NB	A	NBT	A
						NBR	A				NBR	A
				SB	A	SBL	A		SB	A	SBL	A
						SBT	A				SBT	A
5	Marksheffel & Mesa Ridge	Signalized	B	EB	B	EBL	B	B	EB	B	EBL	B
						EBT	A				EBT	A

			AM Peak Hour Results					PM Peak Hour Results				
Int ID	Intersection	Control	Int LOS	Appr	Appr LOS	Mvmt	Mvmt LOS	Int LOS	Appr	Appr LOS	Mvmt	Mvmt LOS
						EBR	A				EBR	A
				WB	A	WBL	B		WB	A	WBL	A
						WBT	A				WBT	A
						WBR	A				WBR	A
				NB	A	NBL	B		NB	C	NBL	C
						NBT	A				NBT	C
						NBR	A				NBR	C
				SB	B	SBL	B		SB	C	SBL	C
						SBT	A				SBT	C
						SBR	B				SBR	C
6	Spring Glen & Mesa Ridge	Signalized	B	EB	B	EBL	C	C	EB	B	EBL	D
						EBT	B				EBT	B
						EBR	B				EBR	A
				WB	B	WBL	B		WB	A	WBL	B
						WBT	B				WBT	A
						WBR	B				WBR	A
				NB	D	NBLT	D		NB	D	NBLT	C
						NBR	B				NBR	C
				SB	C	SBLT	E		SB	F	SBLT	F
						SBR	B				SBR	C
6	Spring Glen & Mesa Ridge Mitigated	Signalized	A	EB	A	EBL	B	B	EB	B	EBL	B
						EBT	A				EBT	A
						EBR	A				EBR	A
				WB	A	WBL	A		WB	A	WBL	A
						WBT	A				WBT	A
						WBR	A				WBR	A
				NB	B	NBL	B		NB	C	NBL	D
						NBTR	B				NBTR	C
				SB	B	SBL	B		SB	C	SBL	C
						SBTR	B				SBTR	C
7	Autumn Glen & Mesa Ridge	Signalized	A	EB	A	EBL	A	A	EB	A	EBL	A
						EBT	A				EBT	A
						EBR	A				EBR	A
				WB	A	WBL	A		WB	A	WBL	A
						WBT	A				WBT	A
						WBR	A				WBR	A
				NB	A	NBL	A		NB	A	NBL	A
						NBT	A				NBT	A
						NBR	A				NBR	A
				SB	A	SBL	A		SB	A	SBL	A
						SBT	A				SBT	A
						SBR	A				SBR	A
8	Wayfarer & Mesa Ridge	Signalized	A	EB	A	EBL	A	A	EB	A	EBL	A
						EBT	A				EBT	A
						EBR	A				EBR	A
				WB	A	WBL	A		WB	A	WBL	A
						WBT	A				WBT	A
						WBR	A				WBR	A
				NB	A	NBL	A		NB	B	NBL	B
						NBT	A				NBT	B

			AM Peak Hour Results					PM Peak Hour Results				
Int ID	Intersection	Control	Int LOS	Appr	Appr LOS	Mvmt	Mvmt LOS	Int LOS	Appr	Appr LOS	Mvmt	Mvmt LOS
						NBR	A				NBR	B
				SB	A	SBL	A		SB	B	SBL	B
						SBT	A				SBT	B
						SBR	A				SBR	B
9	Powers & Mesa Ridge	Signalized	C	WB	D	WBL	D	F	WB	F	WBL	F
						WBR	D				WBR	C
				NB	C	NBT	C		NB	F	NBT	F
						NBR	A				NBR	A
				SB	B	SBL	B		SB	E	SBL	F
						SBT	B				SBT	A

Table 11 - Horizon Year (2040) Background 95th Percentile Queue Lengths without Project

				AM Peak Hour	PM Peak Hour
Int ID	Intersection	Movement	Turn Lane Storage (ft)	Queue Length (ft)	Queue Length (ft)
1	Powers & Fontaine	EBL	235	109	125
		EBT		34	102
		EBR	450	0	38
		WBL	400	135	95
		WBT		46	78
		WBR	400	6	15
		NBL	700	20	31
		NBT		116	164
		NBR	600	0	34
		SBL		33	35
		SBT		105	208
		SBR	490	3	44
2	Rolling View & Fontaine	EBT		-	-
		EBR	235	-	-
		WBL	235	0	0
		WBT		-	-
		NBLR		3	3
3	Marksheffel & Fontaine	EBL	235	30	64
		EBT		162	960
		EBR	235	0	63
		WBL	275	204	290
		WBT		468	404
		WBR	455	323	74
		NBL	455	91	102
		NBT		225	144
		NBR	455	49	675
		SBL	385	134	591
		SBT		216	163
		SBR	385	0	8
3	Marksheffel & Fontaine Mitigated	EBL	235	30	61
		EBT		106	500
		EBR	235	0	53
		WBL	275	187	252
		WBT		451	396

Int ID	Intersection	Movement	Turn Lane Storage (ft)	AM Peak Hour Queue Length (ft)	PM Peak Hour Queue Length (ft)
		WBR	455	387	175
		NBL	455	101	96
		NBT		220	142
		NBR	455 - **Propose 600**	51	595
		SBL	385 - **Propose 500**	162	474
		SBT		212	147
		SBR	385	0	21
4	Marksheffel & Lorson	WBL	250	76	56
		WBR		52	37
		NBT		96	83
		NBR	250	19	30
		SBL	400	17	49
		SBT		134	72
5	Marksheffel & Mesa Ridge	EBL	300	123	433
		EBT		45	63
		EBR	275	18	20
		WBL	300	69	37
		WBT		80	54
		WBR	275	27	18
		NBL	300	70	79
		NBT		75	77
		NBR	275	12	26
		SBL	300	20	93
		SBT		46	110
		SBR	500	118	58
6	Spring Glen & Mesa Ridge	EBL	485	113	250
		EBT		69	128
		EBR	275	9	11
		WBL	235	5	8
		WBT		190	71
		WBR	275	14	17
		NBLT		39	45
		NBR		7	8
		SBLT		51	96
		SBR		147	59
6	Spring Glen & Mesa Ridge Mitigated	EBL	485	114	234
		EBT		69	123
		EBR	275	9	11
		WBL	235	5	8
		WBT		191	67
		WBR	275	14	16
		NBL	235	41	45
		NBTR		11	16
		SBL	235	50	92
		SBTR		148	63
7	Autumn Glen & Mesa Ridge	EBL	325	10	49
		EBT		20	48
		EBR	275	6	11
		WBL	275	5	9
		WBT		27	30
		WBR	275	2	9

				AM Peak Hour	PM Peak Hour
Int ID	Intersection	Movement	Turn Lane Storage (ft)	Queue Length (ft)	Queue Length (ft)
		NBL	250	19	22
		NBT		2	17
		NBR	275	4	15
		SBL	250	8	30
		SBT		2	12
		SBR	275	13	26
8	Wayfarer & Mesa Ridge	EBL	300	26	104
		EBT		28	108
		EBR	275	8	16
		WBL	275	16	26
		WBT		45	58
		WBR	250	4	11
		NBL	275	44	103
		NBT		5	9
		NBR	275	10	10
		SBL	275	9	10
		SBT		5	9
		SBR	125	21	32
9	Powers & Mesa Ridge	WBL	325	385	453
		WBR		348	305
		NBT		218	825
		NBR	150	0	0
		SBL	1000	96	910
		SBT		255	114

Figure 11 shows the lane configurations and traffic control for the 2040 background traffic scenario.

Figure 11 - 2040 Background Lane Configuration & Traffic Control

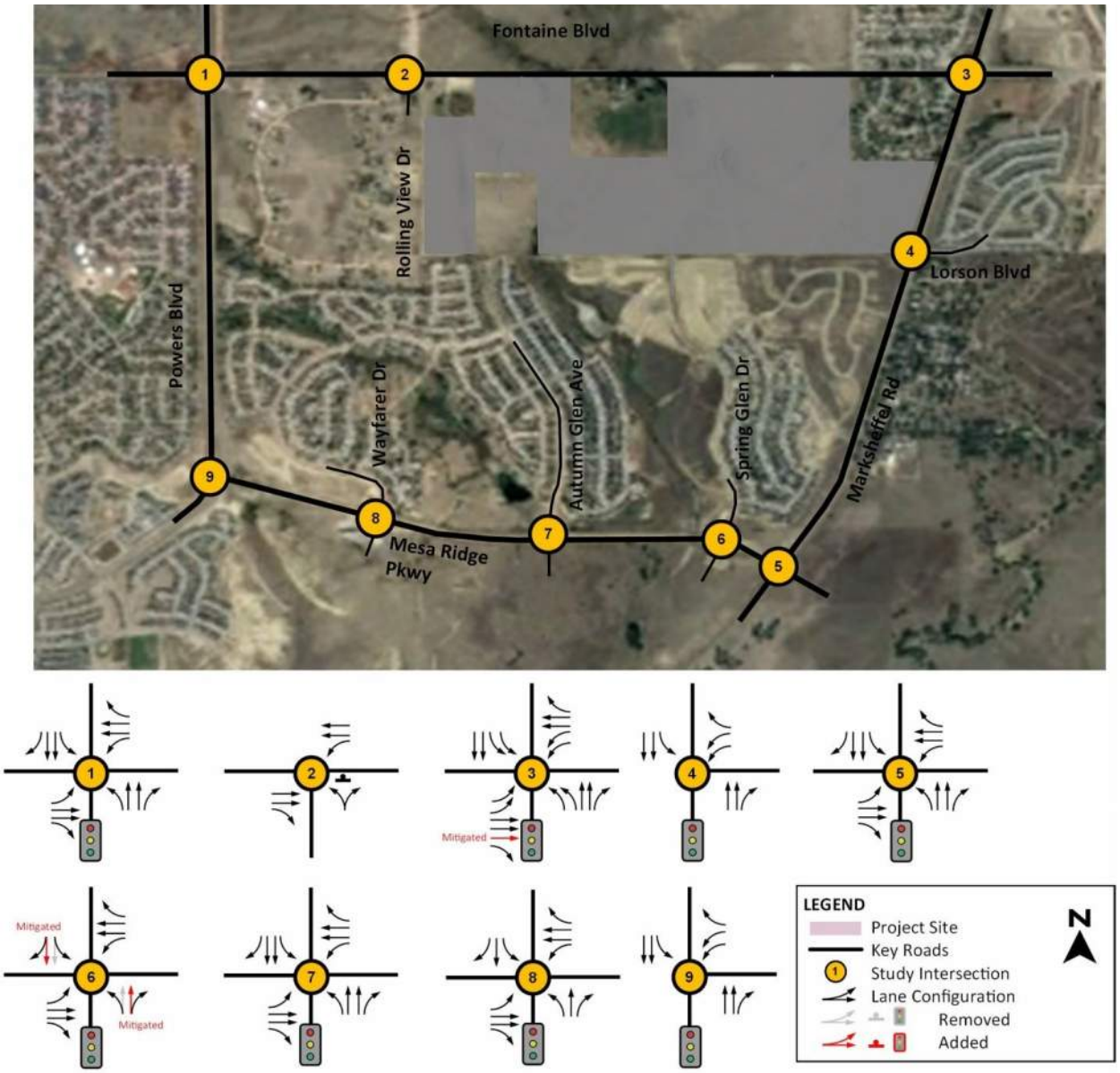

With Project (Total Traffic)

Figure 12 shows the total traffic volumes which include the Corvallis site-generated trips added into the previously calculated background volumes. Table 13 shows the LOS and Table 14 shows the 95th percentile queue lengths for the study intersections. The full analysis software printout is provided in Appendix G.

Powers Boulevard/Mesa Ridge Parkway has an LOS F, but this intersection is shown to be upgraded to a grade separated interchange by 2040. The only other deficiency is the intersection of Autumn Glen Avenue/Fontaine Boulevard, where the northbound left turning traffic and increase in background traffic combine to cause an LOS F.

- Autumn Glen Avenue/Fontaine Boulevard
  - This site access has a failing northbound left turn; installing a signal eliminates the unacceptable LOS F condition
    - In addition to improving the LOS, a traffic signal is warranted based on proportional hourly volumes compared against the Eight-Hour Vehicular Volume Warrant and the Four-Hour Vehicular Volume Warrant (See Appendix H).
    - The Four-Hour Vehicular Volume Warrant indicates that the signal will be warranted when the site is built out to about 75%, or about 130 site vehicles using the Autumn Glen Ave/Fontaine Blvd intersection. The intersection will not need signalization operationally (LOS E or worse) until sometime between 2030 and 2040, so the signal will not likely be installed until sometime after 2030.

Fair Share Contributions

Intersections

At the point when The Autumn Glen Avenue/Fontaine Boulevard intersection triggers the four-hour traffic signal warrant to be met, it contributes approximately 57.0% of the traffic to the intersection. Similarly, when the Minor Arterial A/Fontaine Boulevard intersection triggers the four-hour traffic signal warrant to be met, it contributes approximately 48.8% of the traffic to the intersection.

Segments

Corvallis will contribute traffic to the adjacent roadway network that surrounds it. The proportion of traffic on each segment that results from this development is shown below in Table 12.

Table 12 - Fair Share Contribution for Roadway Segments

DESCRIPTION	SITE ADT	2040 BKGD	2040 TOT	Site Contribution
Fontaine Blvd east of Powers Blvd intersection	14,000	9,000	23,000	60.9%
Fontaine Blvd between east and west site accesses	11,600	6,500	18,100	64.1%
Fontaine Blvd west of Marksheffel Rd intersection	4,000	22,000	26,000	15.4%
Marksheffel Rd south of Fontaine Blvd intersection	4,400	19,600	24,000	18.3%
Marksheffel Rd north of Mesa Ridge Pkwy intersection	7,900	16,700	24,600	32.1%
Mesa Ridge Pkwy between Spring Glen Ave and Wayfarer Dr	10,500	12,100	22,600	46.5%
Powers Blvd north of Mesa Ridge Pkwy intersection	4,700	29,000	33,700	13.9%

Figure 12 - Horizon Year (2040) Total Traffic with Project

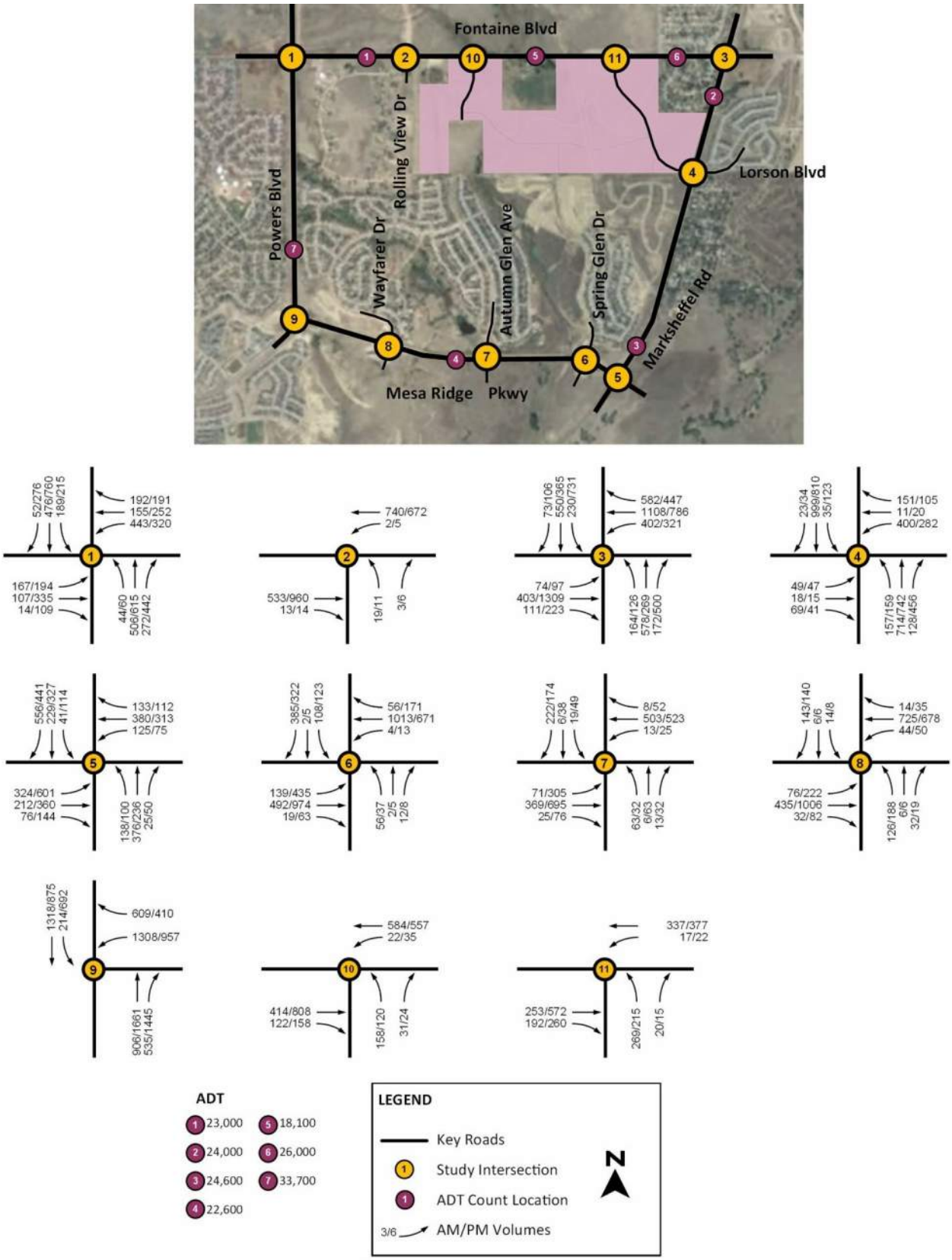

Table 13 - Horizon Year (2040) Total Traffic LOS with Project

			AM Peak Hour Results					PM Peak Hour Results				
Int ID	Intersection	Control	Int LOS	Appr	Appr LOS	Mvmt	Mvmt LOS	Int LOS	Appr	Appr LOS	Mvmt	Mvmt LOS
1	Powers & Fontaine	Signalized	C	EB	D	EBL	C	C	EB	D	EBL	C
						EBT	D				EBT	D
						EBR	A				EBR	A
				WB	D	WBL	D		WB	C	WBL	C
						WBT	C				WBT	C
						WBR	A				WBR	A
				NB	B	NBL	B		NB	C	NBL	B
						NBT	B				NBT	C
						NBR	A				NBR	A
				SB	B	SBL	B		SB	B	SBL	B
						SBT	B				SBT	C
						SBR	A				SBR	A
2	Rolling View & Fontaine	TWSC	C	EB	-	EBT	-	D	EB	-	EBT	-
						EBR	-				EBR	-
				WB	-	WBL	A		WB	-	WBL	B
						WBT	-				WBT	-
				NB	C	NBLR	C		NB	D	NBLR	D
3	Marksheffel & Fontaine	Signalized	D	EB	C	EBL	D	D	EB	D	EBL	E
						EBT	C				EBT	D
						EBR	A				EBR	A
				WB	D	WBL	E		WB	D	WBL	F
						WBT	D				WBT	D
						WBR	A				WBR	A
				NB	D	NBL	D		NB	D	NBL	E
						NBT	C				NBT	D
						NBR	A				NBR	A
				SB	D	SBL	D		SB	D	SBL	E
						SBT	C				SBT	C
						SBR	A				SBR	A
4	Marksheffel & Lorson	Signalized	B	WB	C	EBL	C	B	WB	C	EBL	C
						EBTR	C				EBTR	C
				WB	B	WBL	B		WB	B	WBL	B
						WBTR	B				WBTR	B
				NB	A	NBL	B		NB	A	NBL	A
						NBT	A				NBT	A
						NBR	A				NBR	A
				SB	B	SBL	B		SB	B	SBL	B
						SBT	B				SBT	B
						SBR	B				SBR	B
5	Marksheffel & Mesa Ridge	Signalized	B	EB	B	EBL	C	B	EB	B	EBL	C
						EBT	A				EBT	A
						EBR	A				EBR	A
				WB	B	WBL	B		WB	B	WBL	B
						WBT	B				WBT	C
						WBR	B				WBR	B
				NB	B	NBL	B		NB	B	NBL	B
						NBT	B				NBT	B
						NBR	A				NBR	B
				SB	B	SBL	B		SB	B	SBL	B

			AM Peak Hour Results					PM Peak Hour Results				
Int ID	Intersection	Control	Int LOS	Appr	Appr LOS	Mvmt	Mvmt LOS	Int LOS	Appr	Appr LOS	Mvmt	Mvmt LOS
						SBT	B				SBT	B
						SBR	B				SBR	A
6	Spring Glen & Mesa Ridge	Signalized	C	EB	B	EBL	C	C	EB	C	EBL	D
						EBT	B				EBT	B
						EBR	B				EBR	A
				WB	C	WBL	B		WB	C	WBL	C
						WBT	C				WBT	C
						WBR	B				WBR	C
				NB	C	NBL	C		NB	C	NBL	C
						NBTR	B				NBT	C
				SB	C	SBL	B		SB	C	SBL	C
						SBTR	D				SBR	C
7	Autumn Glen & Mesa Ridge	Signalized	A	EB	A	EBL	A	A	EB	A	EBL	A
						EBT	A				EBT	A
						EBR	A				EBR	A
				WB	A	WBL	A		WB	A	WBL	A
						WBT	A				WBT	A
						WBR	A				WBR	A
				NB	A	NBL	A		NB	B	NBL	B
						NBT	A				NBT	B
						NBR	A				NBR	B
				SB	B	SBL	A		SB	B	SBL	B
						SBT	A				SBT	B
						SBR	B				SBR	C
8	Wayfarer & Mesa Ridge	Signalized	A	EB	A	EBL	A	A	EB	A	EBL	A
						EBT	A				EBT	A
						EBR	A				EBR	A
				WB	A	WBL	A		WB	A	WBL	A
						WBT	A				WBT	A
						WBR	A				WBR	A
				NB	A	NBL	A		NB	B	NBL	B
						NBT	A				NBT	B
						NBR	A				NBR	B
				SB	B	SBL	A		SB	B	SBL	B
						SBT	A				SBT	B
						SBR	B				SBR	B
9	Powers & Mesa Ridge	Signalized	C	WB	C	WBL	D	F	WB	F	WBL	F
						WBR	B				WBR	C
				NB	D	NBT	D		NB	F	NBT	F
						NBR	A				NBR	A
				SB	C	SBL	C		SB	F	SBL	F
						SBT	C				SBT	A
10	Autumn Glen & Fontaine	TWSC	C	EB	A	EBT	-	E	EB	B	EBT	-
						EBR	-				EBR	-
				WB	A	WBL	A		WB	B	WBL	B
						WBT	-				WBT	-
				NB	C	NBL	C		NB	E	NBL	F
						NBR	A				NBR	B
10		Signalized	A	EB	A	EBT	A	A	EB	A	EBT	A
						EBR	A				EBR	A

			AM Peak Hour Results					PM Peak Hour Results				
Int ID	Intersection	Control	Int LOS	Appr	Appr LOS	Mvmt	Mvmt LOS	Int LOS	Appr	Appr LOS	Mvmt	Mvmt LOS
	Autumn Glen & Fontaine Mitigated			WB	A	WBL	A		WB	A	WBL	B
						WBT	A				WBT	A
				NB	A	NBL	A		NB	A	NBL	A
						NBR	A				NBR	A
11	Community Arterial A & Fontaine	TWSC	C	EB	-	EBT	-	E	EB	-	EBT	-
						EBR	-				EBR	-
				WB	-	WBL	A		WB	-	WBL	A
						WBT	-				WBT	-
				NB	C	NBL	C		NB	E	NBL	E
						NBR	A				NBR	B
11	Community Arterial A & Fontaine	Signalized	A	EB	A	EBT	A	A	EB	A	EBT	A
						EBR	A				EBR	A
				WB	A	WBL	B		WB	A	WBL	A
						WBT	A				WBT	A
				NB	A	NBL	A		NB	A	NBL	A
						NBR	A				NBR	A

Table 14 - Horizon Year (2040) Total Traffic 95th Percentile Queue Lengths with Project

				AM Peak Hour	PM Peak Hour
Int ID	Intersection	Movement	Turn Lane Storage (ft)	Queue Length (ft)	Queue Length (ft)
1	Powers & Fontaine	EBL	235	119	150
		EBT		60	162
		EBR	450	0	13
		WBL	400	366	279
		WBT		67	116
		WBR	400	54	56
		NBL	700	30	45
		NBT		17	265
		NBR	600	53	131
		SBL		101	140
		SBT		144	288
		SBR	490	0	51
2	Rolling View & Fontaine	EBT		-	-
		EBR	235	-	-
		WBL	235	0	0
		WBT		-	-
		NBLR		8	10
3	Marksheffel & Fontaine	EBL	235	54	75
		EBT		122	514
		EBR	235	23	134
		WBL	275	230	254
		WBT		550	407
		WBR	455	411	207
		NBL	455	100	92
		NBT		272	157
		NBR	455 - **Propose 600**	67	590
		SBL	385 - **Propose 500**	126	468
		SBT		237	165

				AM Peak Hour	PM Peak Hour
Int ID	Intersection	Movement	Turn Lane Storage (ft)	Queue Length (ft)	Queue Length (ft)
		SBR	385	18	63
4	Marksheffel & Lorson	EBL		50	45
		EBTR		44	33
		WBL	250	112	71
		WBTR		44	48
		NBL	250	57	64
		NBT		109	126
		NBR	250	19	37
		SBL	400	27	100
		SBT		252	200
		SBR	200	0	0
5	Marksheffel & Mesa Ridge	EBL	300	151	204
		EBT		40	60
		EBR	275	18	22
		WBL	300	86	66
		WBT		100	98
		WBR	275	33	36
		NBL	300	93	81
		NBT		97	72
		NBR	275	0	17
		SBL	300	34	89
		SBT		62	98
		SBR	500	194	87
6	Spring Glen & Mesa Ridge	EBL	485	116	366
		EBT		128	208
		EBR	275	0	15
		WBL	235	8	18
		WBT		416	216
		WBR	275	0	41
		NBL	235	40	36
		NBTR		14	17
		SBL	235	68	94
		SBTR	235	173	72
7	Autumn Glen & Mesa Ridge	EBL	325	25	133
		EBT		40	72
		EBR	275	7	10
		WBL	275	7	9
		WBT		55	53
		WBR	275	3	8
		NBL	250	24	31
		NBT		2	24
		NBR	275	5	20
		SBL	250	11	45
		SBT		2	17
		SBR	275	34	46
8	Wayfarer & Mesa Ridge	EBL	300	32	165
		EBT		53	170
		EBR	275	9	15
		WBL	275	17	28
		WBT		92	10
		WBR	250	4	10

				AM Peak Hour	PM Peak Hour
Int ID	Intersection	Movement	Turn Lane Storage (ft)	Queue Length (ft)	Queue Length (ft)
		NBL	275	59	98
		NBT		7	8
		NBR	275	14	10
		SBL	275	12	10
		SBT		7	8
		SBR	125	37	32
9	Powers & Mesa Ridge	WBL	325	483	684
		WBR		320	332
		NBT		359	1156
		NBR	150	0	245
		SBL	1000	165	1080
		SBT		420	206
10	Autumn Glen & Fontaine	EBT		-	-
		EBR	235	-	-
		WBL	235	3	5
		WBT		-	-
		NBL	200	60	98
		NBR		3	3
10	Autumn Glen & Fontaine	EBT		41	72
		EBR	235	16	16
		WBL	235	10	12
		WBT		58	47
		NBL	200	47	51
		NBR		10	12
11	Community Arterial A & Fontaine	EBT		-	-
		EBR	235	-	-
		WBL	235	0	3
		WBT		-	-
		NBL	200	73	120
		NBR		3	3
11	Community Arterial A & Fontaine	EBT		30	65
		EBR	235	23	26
		WBL	235	9	11
		WBT		39	43
		NBL	200	62	73
		NBR		6	8

Figure 13 shows the road lane configurations and traffic control for the 2040 total traffic scenario.

Figure 13 - 2040 Total Lane Configurations & Traffic Control

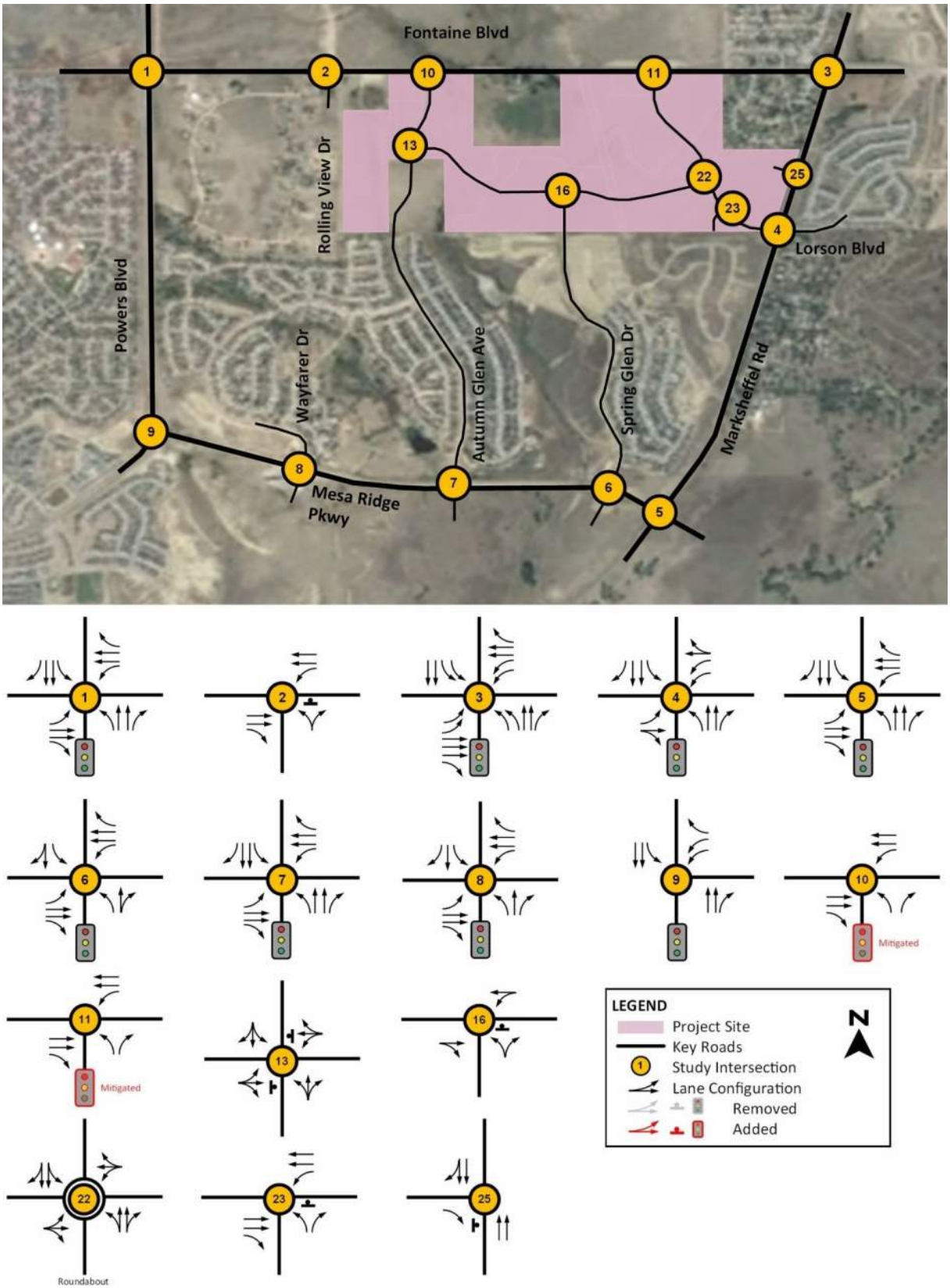

5.0 Findings and Conclusions

This report finds that some of the surrounding roadway network will have deficiencies in the future, both with and without the addition of traffic from the Corvallis development. However, with the recommendations put forth below, the impacts of this development can be mitigated.

Three intersections, Marksheffel Road/Fontaine Boulevard, Mesa Ridge Parkway/Spring Glen Drive, and Powers Boulevard/Mesa Ridge Parkway will be approaching unsatisfactory LOS in the projected 2030 buildout year. The Corvallis development, while only contributing about 7% of the traffic to the Marksheffel Road/Fontaine Boulevard intersection, would be the tipping point causing it to have an unacceptable LOS.

In the 2040 no-build scenario, these same intersections all have an unacceptable LOS without any contribution from the proposed development. With the recommendations for project buildout in 2030, these LOS conditions can be mitigated both with and without the project.

There are a number of movements where the 95th percentile queue length exceeds the existing turn bay storage length. Many of these locations are not built out to their ultimate typical section and therefore should be able to accommodate the required storage length. Those locations are listed below in the recommendations.

6.0 Recommendations

The following are summaries of the recommendations for each of the analysis periods of this study.

Existing 2020

There are no LOS or queue length deficiencies in the existing condition and therefore no recommendations for this timeframe.

Background 2030 (without Project)

The only intersection requiring mitigation is Powers Boulevard/Mesa Ridge Pkwy, where the following are recommended:

- Reconstruct the northbound right turn to be a free right turn.
- Change the phasing for the westbound right turn to allow overlap with the southbound left turn.

These changes will remove the LOS E and LOS F conditions at this intersection. These conditions exist without the project traffic, therefore the development has no responsibility for this mitigation.

Total Traffic 2030 (with Project)

The following are recommended improvements for this analysis period:

- Marksheffel Road/Fontaine Boulevard
    - Code all right turn movements to overlap with the non-conflicting left-turn phases.
    - Convert northbound free right turn to yield control.
    - Modify northbound right porkchop island to allow for a third eastbound through lane.
    - Adjust signal timing splits to allow for more time to movements that have LOS E or LOS F conditions.
    - Re-stripe the two-way left turn lane on Marksheffel to allow for a 500’ northbound right turn lane

  - The Corvallis development will contribute an estimated 7.5% of the total AM volume through the intersection and an estimated 7.2% of the total PM volume, for an average of 7.3% of the total peak volume through the intersection.
- Spring Glen Drive/Mesa Ridge Parkway
  - When this intersection is improved from 3 legs to 4 legs, it should be striped with northbound and southbound exclusive left turn lanes and shared through/right lanes instead of as proposed in The Glen at Widefield impact studies' showing shared left/through lanes and exclusive right turn lanes.
- Powers Boulevard/Mesa Ridge Parkway
  - This intersection is a planned grade separated traffic interchange located on a state highway and should be programmed in the State's construction planning program.

Background 2040 (without Project)

The background condition in 2040 essentially consists of the same improvements that are required with the project in 2030. These are improvements that will need to be constructed anyway, without the construction of the Corvallis development.

- Marksheffel Road/Fontaine Boulevard
  - Code all right turn movements to overlap with the non-conflicting left-turn phases.
  - Convert northbound free right turn to yield control.
  - Modify northbound right porkchop island to allow for a third eastbound through lane.
  - Adjust signal timing splits to allow for more time to movements that have LOS E or LOS F conditions.
  - Re-stripe the two-way left turn lane on Marksheffel to allow for a 500' northbound right turn lane.
- Spring Glen Drive/Mesa Ridge Parkway
  - When this intersection is improved from 3 legs to 4 legs, it should be striped with northbound and southbound exclusive left turn lanes and shared through/right lanes instead of as proposed in The Glen at Widefield impact studies' showing shared left/through lanes and exclusive right turn lanes.
- Powers Boulevard/Mesa Ridge Parkway
  - Evaluate/design the planned traffic interchange.

Total Traffic 2040 (with Project)

- The traffic interchange at Powers Boulevard/Mesa Ridge Parkway should be constructed by this year, as only major reconstruction of the intersection would allow for the changes that would be necessary to attain acceptable levels of service.
- Re-stripe the two-way left turn lane on Marksheffel Road to allow for a 600' northbound right turn lane and 500' southbound left turn lane at Fontaine Boulevard.
- A traffic signal is warranted at the Autumn Glen Avenue/Fontaine Boulevard intersection in the 2040 total traffic condition using the 8-hour and 4-hour MUTCD Traffic Signal Warrants.
- A traffic signal is warranted at the Minor Arterial A/Fontaine Boulevard intersection in the 2040 total traffic condition using the 8-hour and 4-hour MUTCD Traffic Signal Warrants.
- Re-stripe the westbound left turn lane at Powers Boulevard/Fontaine Boulevard to accommodate 400' of storage.

Appendix A

EXISTING TRAFFIC COUNTS

Date Start: 28-Apr-20
Date End: 28-Apr-20
FONTAINE BLVD W.O. SLEEPY MEADOWS DR
Site Code: 10
Station ID:

Start Time	28-Apr-20 Tue	EB	WB							Total
12:00 AM		6	7							13
01:00		7	4							11
02:00		3	6							9
03:00		5	6							11
04:00		3	26							29
05:00		19	83							102
06:00		55	138							193
07:00		106	193							299
08:00		101	202							303
09:00		115	170							285
10:00		138	188							326
11:00		**164**	**207**							**371**
12:00 PM		198	209							407
01:00		194	185							379
02:00		221	**215**							436
03:00		218	206							424
04:00		249	197							446
05:00		**276**	192							**468**
06:00		196	169							365
07:00		147	138							285
08:00		105	92							197
09:00		56	57							113
10:00		45	26							71
11:00		14	22							36
Total		2641	2938							5579
Percent		47.3%	52.7%							
AM Peak	-	11:00	11:00	-	-	-	-	-	-	11:00
Vol.	-	164	207	-	-	-	-	-	-	371
PM Peak	-	17:00	14:00	-	-	-	-	-	-	17:00
Vol.	-	276	215	-	-	-	-	-	-	468
Grand Total		2641	2938							5579
Percent		47.3%	52.7%							
ADT		ADT 5,579		AADT 5,579						

Date Start: 28-Apr-20
Date End: 28-Apr-20
MARKSHEFFEL RD S.O. FONTAINE BLVD
Site Code: 11
Station ID:

Start Time	28-Apr-20 Tue	NB	SB							Total
12:00 AM		4	9							13
01:00		6	8							14
02:00		4	2							6
03:00		13	13							26
04:00		23	17							40
05:00		96	52							148
06:00		256	122							378
07:00		**294**	196							490
08:00		214	211							425
09:00		214	174							388
10:00		252	225							477
11:00		261	**233**							**494**
12:00 PM		255	255							510
01:00		303	251							554
02:00		315	268							583
03:00		324	311							635
04:00		**330**	**368**							**698**
05:00		312	335							647
06:00		233	241							474
07:00		172	147							319
08:00		130	105							235
09:00		73	64							137
10:00		50	40							90
11:00		30	21							51
Total		4164	3668							7832
Percent		53.2%	46.8%							
AM Peak	-	07:00	11:00	-	-	-	-	-	-	11:00
Vol.	-	294	233	-	-	-	-	-	-	494
PM Peak	-	16:00	16:00	-	-	-	-	-	-	16:00
Vol.	-	330	368	-	-	-	-	-	-	698
Grand Total		4164	3668							7832
Percent		53.2%	46.8%							

ADT ADT 7,832 AADT 7,832

Date Start: 28-Apr-20
Date End: 28-Apr-20
MARKSHEFFEL RD N.O. MESA RIDGE PKWY
Site Code: 12
Station ID:

Start Time	28-Apr-20 Tue	NB	SB							Total
12:00 AM		6	11							17
01:00		9	8							17
02:00		6	3							9
03:00		15	13							28
04:00		24	26							50
05:00		91	81							172
06:00		265	161							426
07:00		294	238							532
08:00		241	257							498
09:00		249	211							460
10:00		267	258							525
11:00		**309**	**281**							**590**
12:00 PM		295	280							575
01:00		328	285							613
02:00		361	292							653
03:00		372	340							712
04:00		**397**	**401**							**798**
05:00		369	365							734
06:00		291	270							561
07:00		212	166							378
08:00		161	127							288
09:00		91	79							170
10:00		58	43							101
11:00		26	23							49
Total		4737	4219							8956
Percent		52.9%	47.1%							
AM Peak	-	11:00	11:00	-	-	-	-	-	-	11:00
Vol.	-	309	281	-	-	-	-	-	-	590
PM Peak	-	16:00	16:00	-	-	-	-	-	-	16:00
Vol.	-	397	401	-	-	-	-	-	-	798
Grand Total		4737	4219							8956
Percent		52.9%	47.1%							
ADT		ADT 8,956		AADT 8,956						

Date Start: 28-Apr-20
Date End: 28-Apr-20
MESA RIDGE PKWY W.O. AUTUMN GLEN AVE
Site Code: 13
Station ID:

Start Time	28-Apr-20 Tue	EB	WB							Total
12:00 AM		13	8							21
01:00		11	6							17
02:00		8	10							18
03:00		4	19							23
04:00		14	30							44
05:00		34	111							145
06:00		80	199							279
07:00		132	226							358
08:00		144	268							412
09:00		190	265							455
10:00		204	252							456
11:00		**270**	**297**							**567**
12:00 PM		341	**272**							613
01:00		326	267							593
02:00		318	224							542
03:00		381	259							640
04:00		410	270							680
05:00		**427**	258							**685**
06:00		363	218							581
07:00		222	134							356
08:00		167	104							271
09:00		109	65							174
10:00		58	24							82
11:00		40	23							63
Total		4266	3809							8075
Percent		52.8%	47.2%							
AM Peak	-	11:00	11:00	-	-	-	-	-	-	11:00
Vol.	-	270	297	-	-	-	-	-	-	567
PM Peak	-	17:00	12:00	-	-	-	-	-	-	17:00
Vol.	-	427	272	-	-	-	-	-	-	685
Grand Total		4266	3809							8075
Percent		52.8%	47.2%							
ADT		ADT 8,075		AADT 8,075						

All Traffic Data Services Inc.

(303) 216-2439
www.alltrafficdata.net

Location: 1 POWERS BLVD & FONTAINE BLVD AM
Date: Tuesday, April 28, 2020
Peak Hour: 07:00 AM - 08:00 AM
Peak 15-Minutes: 07:30 AM - 07:45 AM

Peak Hour - All Vehicles

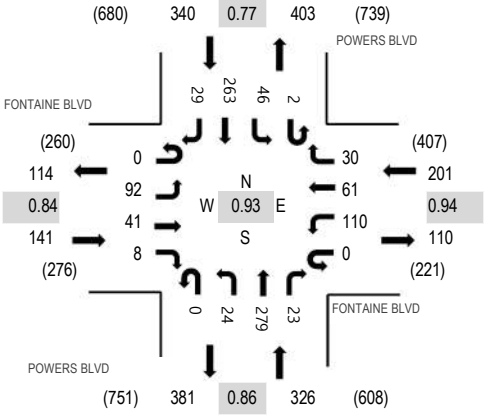

Note: Total study counts contained in parentheses.

Peak Hour - Pedestrians/Bicycles on Crosswalk

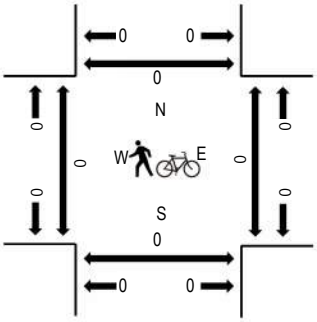

Traffic Counts

Interval Start Time	FONTAINE BLVD Eastbound				FONTAINE BLVD Westbound				POWERS BLVD Northbound				POWERS BLVD Southbound					Rolling Hour	Pedestrian Crossings			
	U-Turn	Left	Thru	Right	U-Turn	Left	Thru	Right	U-Turn	Left	Thru	Right	U-Turn	Left	Thru	Right	Total		West	East	South	North
7:00 AM	0	26	1	3	0	28	15	9	0	2	70	4	0	12	64	5	239	1,008	0	0	0	0
7:15 AM	0	25	14	4	0	28	12	5	0	6	59	6	1	16	54	9	239	1,006	0	0	0	0
7:30 AM	0	21	13	1	0	30	16	9	0	6	80	9	0	11	68	7	271	981	0	0	0	0
7:45 AM	0	20	13	0	0	24	18	7	0	10	70	4	1	7	77	8	259	964	0	0	0	0
8:00 AM	0	23	6	4	0	27	15	10	0	8	55	13	0	8	53	15	237	963	0	0	0	0
8:15 AM	0	26	9	4	0	25	17	5	0	3	43	10	0	4	58	10	214		0	0	0	0
8:30 AM	0	25	9	3	0	35	15	5	0	7	65	8	0	6	62	14	254		0	0	0	0
8:45 AM	0	14	11	1	0	25	19	8	0	1	57	12	0	15	73	22	258		0	0	0	0
Count Total	0	180	76	20	0	222	127	58	0	43	499	66	2	79	509	90	1,971		0	0	0	0
Peak Hour	0	92	41	8	0	110	61	30	0	24	279	23	2	46	263	29	1,008		0	0	0	0

All Traffic Data Services Inc.

(303) 216-2439
www.alltrafficdata.net

Location: 2 ROLLING VIEW DR & FONTAINE BLVD AM
Date: Tuesday, April 28, 2020
Peak Hour: 08:00 AM - 09:00 AM
Peak 15-Minutes: 08:45 AM - 09:00 AM

Peak Hour - All Vehicles

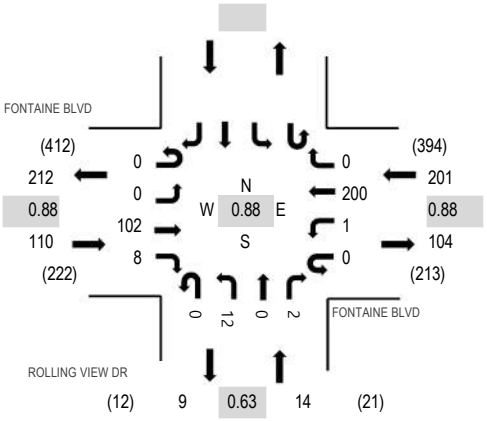

Note: Total study counts contained in parentheses.

Peak Hour - Pedestrians/Bicycles on Crosswalk

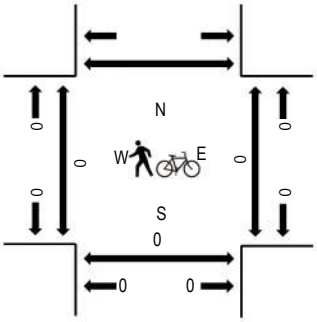

Traffic Counts

Interval Start Time	FONTAINE BLVD Eastbound				FONTAINE BLVD Westbound				ROLLING VIEW DR Northbound				Southbound				Total	Rolling Hour	Pedestrian Crossings		
	U-Turn	Left	Thru	Right	U-Turn	Left	Thru	Right	U-Turn	Left	Thru	Right	U-Turn	Left	Thru	Right			West	East	South	North
7:00 AM	0	0	17	0	0	0	48	0	0	1	0	0					66	312	0	0	0	
7:15 AM	0	0	34	0	0	0	47	0	0	2	0	0					83	323	0	0	0	
7:30 AM	0	0	32	1	0	0	55	0	0	2	0	0					90	313	0	0	0	
7:45 AM	0	0	26	2	0	0	43	0	0	2	0	0					73	306	0	0	0	
8:00 AM	0	0	22	2	0	0	48	0	0	4	0	1					77	325	0	0	0	
8:15 AM	0	0	25	1	0	1	44	0	0	2	0	0					73		0	0	0	
8:30 AM	0	0	19	1	0	0	57	0	0	5	0	1					83		0	0	0	
8:45 AM	0	0	36	4	0	0	51	0	0	1	0	0					92		0	0	0	
Count Total	0	0	211	11	0	1	393	0	0	19	0	2					637		0	0	0	
Peak Hour	0	0	102	8	0	1	200	0	0	12	0	2					325		0	0	0	

All Traffic Data Services Inc.
(303) 216-2439
www.alltrafficdata.net

Location: 3 MARKSHEFFEL RD & FONTAINE BLVD AM
Date: Tuesday, April 28, 2020
Peak Hour: 07:15 AM - 08:15 AM
Peak 15-Minutes: 07:30 AM - 07:45 AM

Peak Hour - All Vehicles

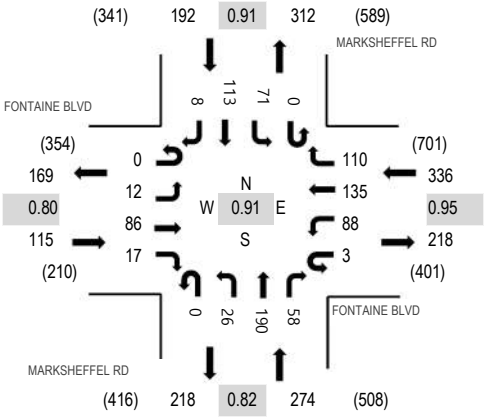

Note: Total study counts contained in parentheses.

Peak Hour - Pedestrians/Bicycles on Crosswalk

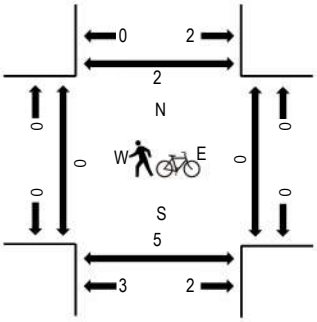

Traffic Counts

Interval Start Time	FONTAINE BLVD Eastbound				FONTAINE BLVD Westbound				MARKSHEFFEL RD Northbound				MARKSHEFFEL RD Southbound				Total	Rolling Hour	Pedestrian Crossings			
	U-Turn	Left	Thru	Right	U-Turn	Left	Thru	Right	U-Turn	Left	Thru	Right	U-Turn	Left	Thru	Right			West	East	South	North
7:00 AM	0	1	15	1	0	16	38	33	0	4	56	11	0	12	25	0	212	914	0	0	0	0
7:15 AM	0	5	25	6	1	21	34	29	0	6	58	9	0	18	33	0	245	917	0	0	0	0
7:30 AM	0	3	23	5	1	22	40	27	0	10	66	12	0	19	23	1	252	896	0	0	2	2
7:45 AM	0	4	21	5	0	21	29	24	0	5	36	15	0	16	27	2	205	848	0	0	0	0
8:00 AM	0	0	17	1	1	24	32	30	0	5	30	22	0	18	30	5	215	846	0	0	2	0
8:15 AM	0	2	24	3	0	33	40	20	0	6	39	13	0	13	29	2	224		0	0	2	0
8:30 AM	0	0	15	2	1	21	38	36	0	3	37	23	0	11	14	3	204		0	0	0	0
8:45 AM	0	5	20	7	0	20	48	21	0	2	27	13	0	12	27	1	203		0	0	0	0
Count Total	0	20	160	30	4	178	299	220	0	41	349	118	0	119	208	14	1,760		0	0	6	2
Peak Hour	0	12	86	17	3	88	135	110	0	26	190	58	0	71	113	8	917		0	0	4	2

All Traffic Data Services Inc.

(303) 216-2439
www.alltrafficdata.net

Location: 4 MARKSHEFFEL RD & LORSON BLVDE AM
Date: Tuesday, April 28, 2020
Peak Hour: 07:15 AM - 08:15 AM
Peak 15-Minutes: 07:30 AM - 07:45 AM

Peak Hour - All Vehicles

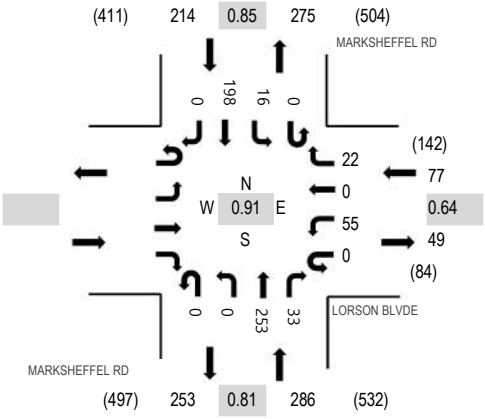

Note: Total study counts contained in parentheses.

Peak Hour - Pedestrians/Bicycles on Crosswalk

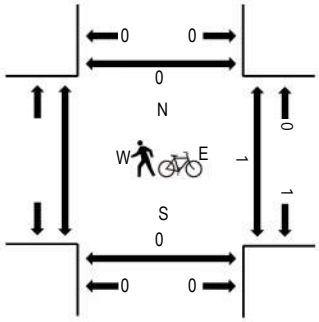

Traffic Counts

Interval Start Time	Eastbound U-Turn	Eastbound Left	Eastbound Thru	Eastbound Right	LORSON BLVDE Westbound U-Turn	LORSON BLVDE Westbound Left	LORSON BLVDE Westbound Thru	LORSON BLVDE Westbound Right	MARKSHEFFEL RD Northbound U-Turn	MARKSHEFFEL RD Northbound Left	MARKSHEFFEL RD Northbound Thru	MARKSHEFFEL RD Northbound Right	MARKSHEFFEL RD Southbound U-Turn	MARKSHEFFEL RD Southbound Left	MARKSHEFFEL RD Southbound Thru	MARKSHEFFEL RD Southbound Right	Total	Rolling Hour	Pedestrian Crossings West	Pedestrian Crossings East	Pedestrian Crossings South	Pedestrian Crossings North
7:00 AM					0	11	0	1	0	0	70	6	0	4	37	0	129	571		0	0	0
7:15 AM					0	20	0	10	0	0	60	8	0	9	50	0	157	577		0	0	0
7:30 AM					0	12	0	7	0	0	80	11	0	4	45	0	159	558		0	0	0
7:45 AM					0	10	0	5	0	0	52	7	0	0	52	0	126	526		0	0	0
8:00 AM					0	13	0	0	0	0	61	7	0	3	51	0	135	514		1	0	0
8:15 AM					0	13	0	0	0	0	55	5	0	1	64	0	138			0	0	0
8:30 AM					0	19	0	1	0	0	61	9	0	3	34	0	127			0	0	0
8:45 AM					0	15	0	5	0	0	35	5	1	2	51	0	114			0	0	0
Count Total					0	113	0	29	0	0	474	58	1	26	384	0	1,085			1	0	0
Peak Hour					0	55	0	22	0	0	253	33	0	16	198	0	577			1	0	0

All Traffic Data Services Inc.
(303) 216-2439
www.alltrafficdata.net

Location: 5 MESA RIDGE PKWY & MARKSHEFFEL RD AM
Date: Tuesday, April 28, 2020
Peak Hour: 07:15 AM - 08:15 AM
Peak 15-Minutes: 07:30 AM - 07:45 AM

Peak Hour - All Vehicles

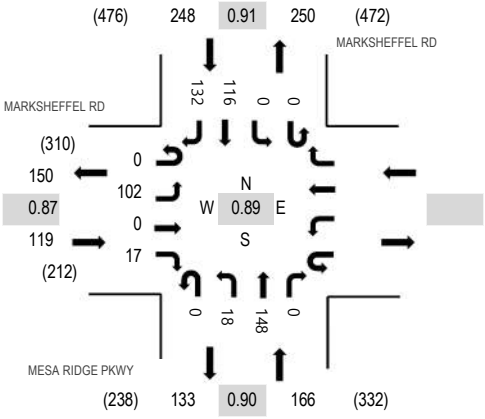

Note: Total study counts contained in parentheses.

Peak Hour - Pedestrians/Bicycles on Crosswalk

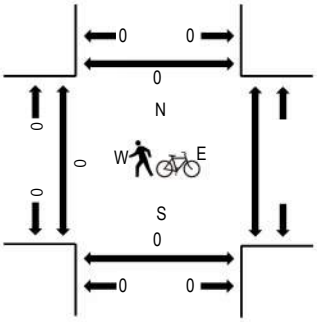

Traffic Counts

Interval Start Time	MARKSHEFFEL RD Eastbound				Westbound				MESA RIDGE PKWY Northbound				MARKSHEFFEL RD Southbound				Total	Rolling Hour	Pedestrian Crossings			
	U-Turn	Left	Thru	Right	U-Turn	Left	Thru	Right	U-Turn	Left	Thru	Right	U-Turn	Left	Thru	Right			West	East	South	North
7:00 AM	0	19	0	0					0	3	45	0	0	0	21	23	111	518	0		0	0
7:15 AM	0	18	0	3					0	3	48	0	0	0	30	34	136	533	0		0	0
7:30 AM	0	28	0	2					0	2	49	0	0	0	32	37	150	525	0		0	0
7:45 AM	0	25	0	8					0	8	25	0	0	0	31	24	121	507	0		0	0
8:00 AM	0	31	0	4					0	5	26	0	0	0	23	37	126	502	0		0	0
8:15 AM	0	19	0	1					0	5	37	0	0	0	27	39	128		0		0	0
8:30 AM	0	24	0	10					0	6	38	0	0	0	14	40	132		0		0	0
8:45 AM	0	14	0	6					0	6	26	0	0	0	26	38	116		0		0	0
Count Total	0	178	0	34					0	38	294	0	0	0	204	272	1,020		0		0	0
Peak Hour	0	102	0	17					0	18	148	0	0	0	116	132	533		0		0	0

All Traffic Data Services Inc.

(303) 216-2439
www.alltrafficdata.net

Location: 6 SPRING GLEN DR & MESA RIDGE PKWY AM
Date: Tuesday, April 28, 2020
Peak Hour: 07:45 AM - 08:45 AM
Peak 15-Minutes: 08:30 AM - 08:45 AM

Peak Hour - All Vehicles

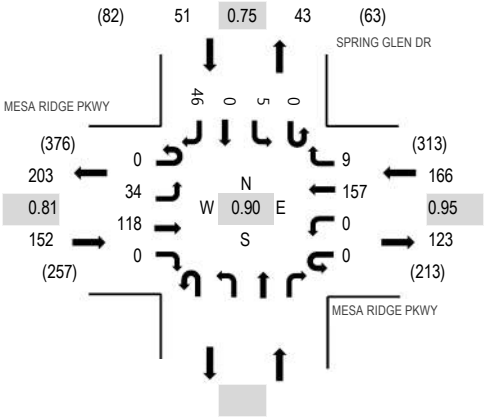

Note: Total study counts contained in parentheses.

Peak Hour - Pedestrians/Bicycles on Crosswalk

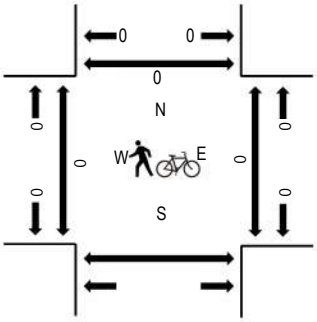

Traffic Counts

Interval Start Time	MESA RIDGE PKWY Eastbound				MESA RIDGE PKWY Westbound				Northbound				SPRING GLEN DR Southbound				Total	Rolling Hour	Pedestrian Crossings		
	U-Turn	Left	Thru	Right	U-Turn	Left	Thru	Right	U-Turn	Left	Thru	Right	U-Turn	Left	Thru	Right			West	East	South North
7:00 AM	0	6	19	0	0	0	25	2					0	0	0	6	58	298	0	0	0
7:15 AM	0	4	22	0	0	0	36	0					0	1	0	9	72	332	0	0	0
7:30 AM	0	3	30	0	0	0	39	0					0	0	0	3	75	341	0	0	0
7:45 AM	0	12	35	0	0	0	32	0					0	1	0	13	93	369	0	0	0
8:00 AM	0	12	32	0	0	0	38	4					0	0	0	6	92	354	0	0	0
8:15 AM	0	4	18	0	0	0	43	2					0	3	0	11	81		0	0	0
8:30 AM	0	6	33	0	0	0	44	3					0	1	0	16	103		0	0	0
8:45 AM	0	4	17	0	0	0	44	1					0	1	0	11	78		0	0	0
Count Total	0	51	206	0	0	0	301	12					0	7	0	75	652		0	0	0
Peak Hour	0	34	118	0	0	0	157	9					0	5	0	46	369		0	0	0

All Traffic Data Services Inc.

(303) 216-2439
www.alltrafficdata.net

Location: 7 AUTUMN GLEN AVE & MESA RIDGE PKWY AM
Date: Tuesday, April 28, 2020
Peak Hour: 07:45 AM - 08:45 AM
Peak 15-Minutes: 08:30 AM - 08:45 AM

Peak Hour - All Vehicles

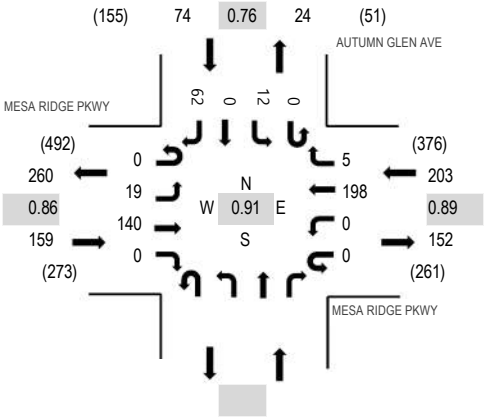

Note: Total study counts contained in parentheses.

Peak Hour - Pedestrians/Bicycles on Crosswalk

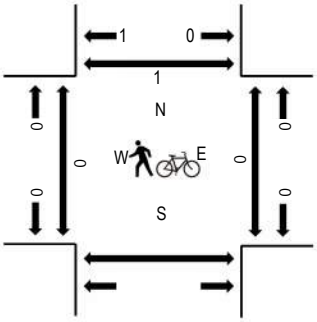

Traffic Counts

Interval Start Time	MESA RIDGE PKWY Eastbound				MESA RIDGE PKWY Westbound				Northbound				AUTUMN GLEN AVE Southbound				Total	Rolling Hour	Pedestrian Crossings		
	U-Turn	Left	Thru	Right	U-Turn	Left	Thru	Right	U-Turn	Left	Thru	Right	U-Turn	Left	Thru	Right			West	East	South	North
7:00 AM	0	0	24	0	0	0	27	1					0	3	0	21	76	377	0	0		0
7:15 AM	0	6	20	0	0	0	46	2					0	3	0	7	84	408	0	0		0
7:30 AM	0	9	28	0	0	0	42	0					0	5	0	23	107	423	0	0		0
7:45 AM	0	5	41	0	0	0	43	2					0	5	0	14	110	436	0	0		0
8:00 AM	0	6	40	0	0	0	42	2					0	5	0	12	107	427	0	0		0
8:15 AM	0	4	20	0	0	0	54	0					0	0	0	21	99		0	0		1
8:30 AM	0	4	39	0	0	0	59	1					0	2	0	15	120		0	0		0
8:45 AM	0	4	23	0	0	0	50	5					0	3	0	16	101		0	0		0
Count Total	0	38	235	0	0	0	363	13					0	26	0	129	804		0	0		1
Peak Hour	0	19	140	0	0	0	198	5					0	12	0	62	436		0	0		1

All Traffic Data Services Inc.

(303) 216-2439
www.alltrafficdata.net

Location: 8 WAYFARER DR & MESA RIDGE PKWY AM
Date: Tuesday, April 28, 2020
Peak Hour: 07:45 AM - 08:45 AM
Peak 15-Minutes: 08:30 AM - 08:45 AM

Peak Hour - All Vehicles

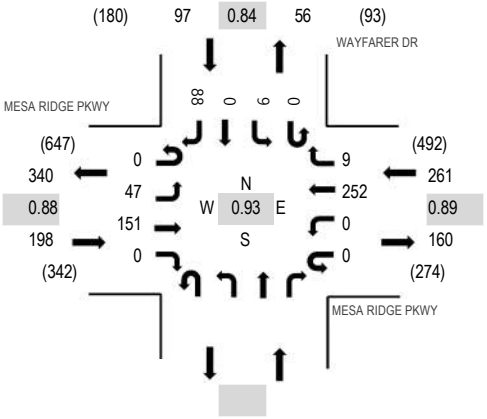

Note: Total study counts contained in parentheses.

Peak Hour - Pedestrians/Bicycles on Crosswalk

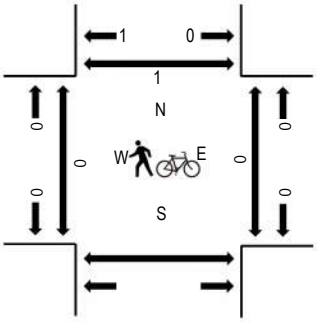

Traffic Counts

Interval Start Time	MESA RIDGE PKWY Eastbound				MESA RIDGE PKWY Westbound				Northbound				WAYFARER DR Southbound				Total	Rolling Hour	Pedestrian Crossings		
	U-Turn	Left	Thru	Right	U-Turn	Left	Thru	Right	U-Turn	Left	Thru	Right	U-Turn	Left	Thru	Right			West	East	South	North
7:00 AM	0	5	22	0	0	0	48	2					0	2	0	24	103	472	0	0		0
7:15 AM	0	8	26	0	0	0	48	0					0	0	0	17	99	506	0	0		0
7:30 AM	0	4	37	0	0	0	67	0					0	0	0	24	132	539	0	0		0
7:45 AM	0	11	45	0	0	0	55	5					0	4	0	18	138	556	0	0		1
8:00 AM	0	13	41	0	0	0	53	1					0	1	0	28	137	542	0	0		0
8:15 AM	0	16	24	0	0	0	70	2					0	1	0	19	132		0	0		0
8:30 AM	0	7	41	0	0	0	74	1					0	3	0	23	149		0	0		0
8:45 AM	0	16	26	0	0	0	64	2					0	1	0	15	124		0	0		0
Count Total	0	80	262	0	0	0	479	13					0	12	0	168	1,014		0	0		1
Peak Hour	0	47	151	0	0	0	252	9					0	9	0	88	556		0	0		1

All Traffic Data Services Inc.

(303) 216-2439
www.alltrafficdata.net

Location: 9 POWERS BLVD & MESA RIDGE PKWY AM
Date: Tuesday, April 28, 2020
Peak Hour: 07:30 AM - 08:30 AM
Peak 15-Minutes: 07:30 AM - 07:45 AM

Peak Hour - All Vehicles

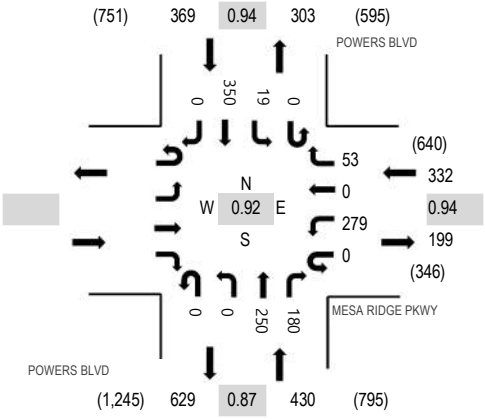

Note: Total study counts contained in parentheses.

Peak Hour - Pedestrians/Bicycles on Crosswalk

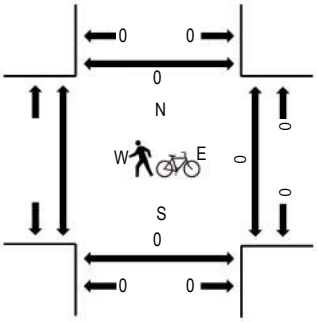

Traffic Counts

Interval Start Time	Eastbound U-Turn	Eastbound Left	Eastbound Thru	Eastbound Right	MESA RIDGE PKWY Westbound U-Turn	Westbound Left	Westbound Thru	Westbound Right	POWERS BLVD Northbound U-Turn	Northbound Left	Northbound Thru	Northbound Right	POWERS BLVD Southbound U-Turn	Southbound Left	Southbound Thru	Southbound Right	Total	Rolling Hour	Pedestrian Crossings West	East	South	North
7:00 AM					0	48	0	14	0	0	66	25	0	1	94	0	248	1,090		0	0	0
7:15 AM					0	57	0	13	0	0	50	31	0	2	84	0	237	1,113		0	0	0
7:30 AM					0	76	0	10	0	0	81	42	0	4	95	0	308	1,131		0	0	0
7:45 AM					0	63	0	17	0	0	64	52	0	3	98	0	297	1,114		0	0	0
8:00 AM					0	66	0	19	0	0	55	47	0	10	74	0	271	1,096		0	0	0
8:15 AM					0	74	0	7	0	0	50	39	0	2	83	0	255			0	0	0
8:30 AM					0	73	0	18	0	0	58	40	0	8	94	0	291			0	0	0
8:45 AM					0	76	0	9	0	0	64	31	0	9	90	0	279			0	0	0
Count Total					0	533	0	107	0	0	488	307	0	39	712	0	2,186			0	0	0
Peak Hour					0	279	0	53	0	0	250	180	0	19	350	0	1,131			0	0	0

All Traffic Data Services Inc.

(303) 216-2439
www.alltrafficdata.net

Location: 1 POWERS BLVD & FONTAINE BLVD PM
Date: Tuesday, April 28, 2020
Peak Hour: 04:30 PM - 05:30 PM
Peak 15-Minutes: 04:45 PM - 05:00 PM

Peak Hour - All Vehicles

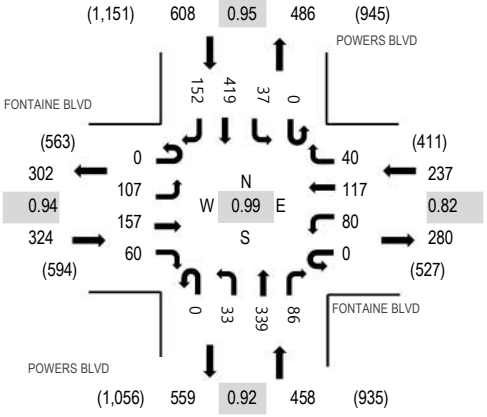

Note: Total study counts contained in parentheses.

Peak Hour - Pedestrians/Bicycles on Crosswalk

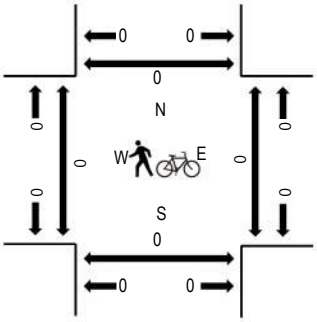

Traffic Counts

Interval Start Time	FONTAINE BLVD Eastbound				FONTAINE BLVD Westbound				POWERS BLVD Northbound				POWERS BLVD Southbound					Rolling Hour	Pedestrian Crossings			
	U-Turn	Left	Thru	Right	U-Turn	Left	Thru	Right	U-Turn	Left	Thru	Right	U-Turn	Left	Thru	Right	Total		West	East	South	North
4:00 PM	0	27	28	11	0	18	14	6	1	9	98	24	0	2	109	30	377	1,558	0	0	0	0
4:15 PM	0	25	27	14	0	15	17	10	0	14	91	20	0	13	94	25	365	1,583	0	0	0	0
4:30 PM	0	33	36	17	0	25	30	6	0	5	83	17	0	6	111	37	406	1,627	0	0	0	0
4:45 PM	0	20	40	18	0	21	29	10	0	9	87	27	0	13	105	31	410	1,595	0	0	0	0
5:00 PM	0	28	37	11	0	24	33	15	0	11	79	19	0	8	91	46	402	1,533	0	0	0	0
5:15 PM	0	26	44	14	0	10	25	9	0	8	90	23	0	10	112	38	409		0	0	0	0
5:30 PM	0	20	35	10	0	18	23	8	0	18	65	33	0	9	83	52	374		0	0	0	0
5:45 PM	0	30	28	15	0	20	16	9	0	15	70	19	0	9	89	28	348		0	0	0	0
Count Total	0	209	275	110	0	151	187	73	1	89	663	182	0	70	794	287	3,091		0	0	0	0
Peak Hour	0	107	157	60	0	80	117	40	0	33	339	86	0	37	419	152	1,627		0	0	0	0

All Traffic Data Services Inc.

(303) 216-2439
www.alltrafficdata.net

Location: 2 ROLLING VIEW DR & FONTAINE BLVD PM
Date: Tuesday, April 28, 2020
Peak Hour: 04:45 PM - 05:45 PM
Peak 15-Minutes: 04:45 PM - 05:00 PM

Peak Hour - All Vehicles

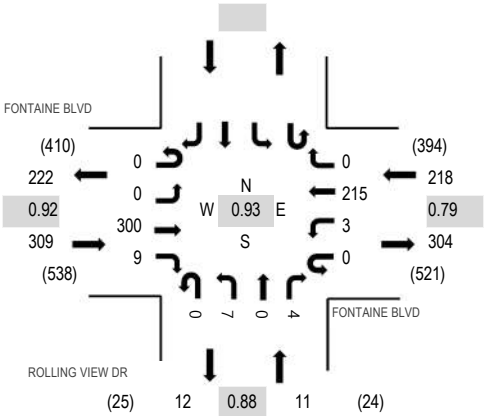

Note: Total study counts contained in parentheses.

Peak Hour - Pedestrians/Bicycles on Crosswalk

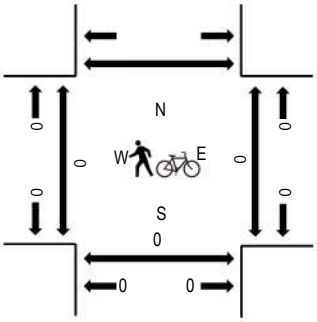

Traffic Counts

Interval Start Time	FONTAINE BLVD Eastbound				FONTAINE BLVD Westbound				ROLLING VIEW DR Northbound				Southbound				Total	Rolling Hour	Pedestrian Crossings		
	U-Turn	Left	Thru	Right	U-Turn	Left	Thru	Right	U-Turn	Left	Thru	Right	U-Turn	Left	Thru	Right			West	East	South	North
4:00 PM	0	0	53	3	0	0	33	0	0	3	0	0					92	461	0	0	0	
4:15 PM	0	0	56	4	0	0	45	0	0	4	0	0					109	512	0	0	0	
4:30 PM	0	0	55	3	0	1	52	0	0	4	0	0					115	529	0	0	0	
4:45 PM	0	0	80	2	0	2	59	0	0	2	0	0					145	538	0	0	0	
5:00 PM	0	0	64	2	0	1	72	0	0	2	0	2					143	495	0	0	0	
5:15 PM	0	0	80	4	0	0	40	0	0	2	0	0					126		0	0	0	
5:30 PM	0	0	76	1	0	0	44	0	0	1	0	2					124		0	0	0	
5:45 PM	0	0	53	2	0	0	45	0	0	2	0	0					102		0	0	0	
Count Total	0	0	517	21	0	4	390	0	0	20	0	4					956		0	0	0	
Peak Hour	0	0	300	9	0	3	215	0	0	7	0	4					538		0	0	0	

All Traffic Data Services Inc.

(303) 216-2439
www.alltrafficdata.net

Location: 3 MARKSHEFFEL RD & FONTAINE BLVD PM
Date: Tuesday, April 28, 2020
Peak Hour: 04:45 PM - 05:45 PM
Peak 15-Minutes: 05:00 PM - 05:15 PM

Peak Hour - All Vehicles

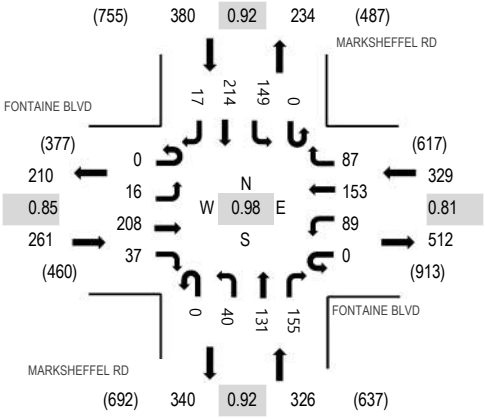

Note: Total study counts contained in parentheses.

Peak Hour - Pedestrians/Bicycles on Crosswalk

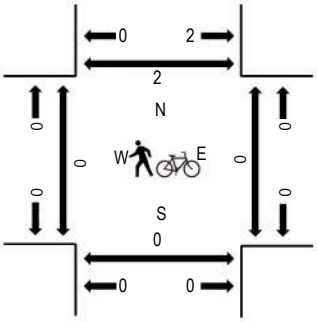

Traffic Counts

Interval Start Time	FONTAINE BLVD Eastbound				FONTAINE BLVD Westbound				MARKSHEFFEL RD Northbound				MARKSHEFFEL RD Southbound				Total	Rolling Hour	Pedestrian Crossings			
	U-Turn	Left	Thru	Right	U-Turn	Left	Thru	Right	U-Turn	Left	Thru	Right	U-Turn	Left	Thru	Right			West	East	South	North
4:00 PM	0	3	26	9	0	23	29	23	0	3	40	32	0	30	54	3	275	1,205	0	0	0	0
4:15 PM	0	7	30	11	0	16	27	17	0	8	36	45	0	35	66	5	303	1,260	0	0	0	0
4:30 PM	0	6	39	7	0	21	41	13	0	9	44	27	0	31	68	3	309	1,280	0	0	0	0
4:45 PM	0	2	49	10	0	21	40	20	0	7	39	38	0	35	52	5	318	1,296	0	0	0	0
5:00 PM	0	1	47	13	0	24	51	29	0	9	27	38	0	43	46	2	330	1,264	0	0	0	2
5:15 PM	0	6	48	8	0	21	35	23	0	14	34	40	0	33	57	4	323		0	0	0	0
5:30 PM	0	7	64	6	0	23	27	15	0	10	31	39	0	38	59	6	325		0	0	0	0
5:45 PM	0	9	43	9	0	24	33	21	0	2	34	31	0	32	44	4	286		0	0	0	0
Count Total	0	41	346	73	0	173	283	161	0	62	285	290	0	277	446	32	2,469		0	0	0	2
Peak Hour	0	16	208	37	0	89	153	87	0	40	131	155	0	149	214	17	1,296		0	0	0	2

All Traffic Data Services Inc.
(303) 216-2439
www.alltrafficdata.net

Location: 4 MARKSHEFFEL RD & LORSON BLVDE PM
Date: Tuesday, April 28, 2020
Peak Hour: 04:00 PM - 05:00 PM
Peak 15-Minutes: 04:30 PM - 04:45 PM

Peak Hour - All Vehicles

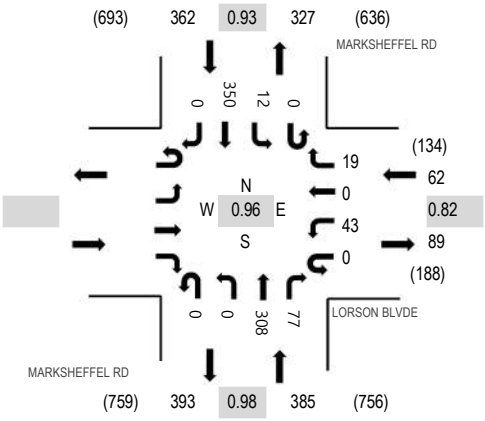

Note: Total study counts contained in parentheses.

Peak Hour - Pedestrians/Bicycles on Crosswalk

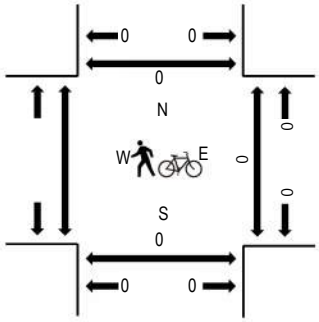

Traffic Counts

Interval Start Time	Eastbound U-Turn	Eastbound Left	Eastbound Thru	Eastbound Right	LORSON BLVDE Westbound U-Turn	LORSON BLVDE Westbound Left	LORSON BLVDE Westbound Thru	LORSON BLVDE Westbound Right	MARKSHEFFEL RD Northbound U-Turn	MARKSHEFFEL RD Northbound Left	MARKSHEFFEL RD Northbound Thru	MARKSHEFFEL RD Northbound Right	MARKSHEFFEL RD Southbound U-Turn	MARKSHEFFEL RD Southbound Left	MARKSHEFFEL RD Southbound Thru	MARKSHEFFEL RD Southbound Right	Total	Rolling Hour	Pedestrian Crossings West	Pedestrian Crossings East	Pedestrian Crossings South	Pedestrian Crossings North
4:00 PM					0	9	0	5	0	0	75	22	0	1	88	0	200	809		0	0	0
4:15 PM					0	11	0	4	0	0	82	15	0	4	89	0	205	804		0	0	0
4:30 PM					0	14	0	6	0	0	77	16	0	4	93	0	210	809		0	0	0
4:45 PM					0	9	0	4	0	0	74	24	0	3	80	0	194	798		0	0	0
5:00 PM					0	11	0	3	0	0	74	23	0	2	82	0	195	774		0	0	0
5:15 PM					0	12	0	9	0	0	77	22	0	0	90	0	210			0	0	0
5:30 PM					0	12	0	10	0	0	70	21	0	5	81	0	199			0	0	0
5:45 PM					0	14	0	1	0	0	65	19	0	7	64	0	170			0	0	0
Count Total					0	92	0	42	0	0	594	162	0	26	667	0	1,583			0	0	0
Peak Hour					0	43	0	19	0	0	308	77	0	12	350	0	809			0	0	0

All Traffic Data Services Inc.
(303) 216-2439
www.alltrafficdata.net

Location: 5 MESA RIDGE PKWY & MARKSHEFFEL RD PM
Date: Tuesday, April 28, 2020
Peak Hour: 04:00 PM - 05:00 PM
Peak 15-Minutes: 04:45 PM - 05:00 PM

Peak Hour - All Vehicles

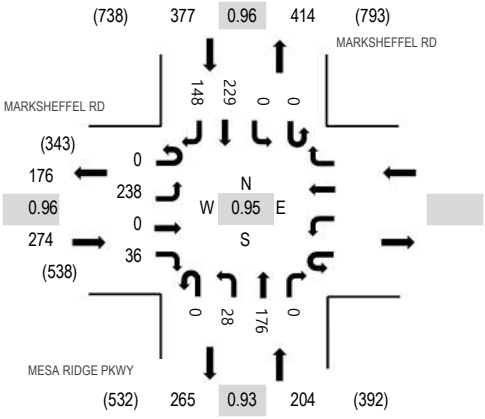

Note: Total study counts contained in parentheses.

Peak Hour - Pedestrians/Bicycles on Crosswalk

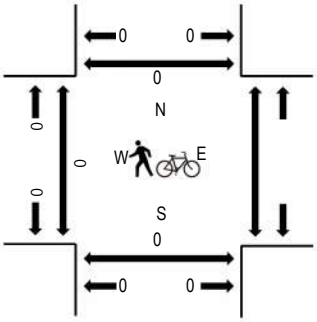

Traffic Counts

Interval Start Time	MARKSHEFFEL RD Eastbound U-Turn	Eastbound Left	Eastbound Thru	Eastbound Right	Westbound U-Turn	Westbound Left	Westbound Thru	Westbound Right	MESA RIDGE PKWY Northbound U-Turn	Northbound Left	Northbound Thru	Northbound Right	MARKSHEFFEL RD Southbound U-Turn	Southbound Left	Southbound Thru	Southbound Right	Total	Rolling Hour	Pedestrian Crossings West	East	South	North
4:00 PM	0	55	0	14					0	4	51	0	0	0	52	36	212	855	0		0	0
4:15 PM	0	62	0	8					0	13	38	0	0	0	61	31	213	853	0		0	0
4:30 PM	0	56	0	7					0	5	39	0	0	0	62	37	206	850	0		0	0
4:45 PM	0	65	0	7					0	6	48	0	0	0	54	44	224	854	0		0	0
5:00 PM	0	55	0	18					0	9	35	0	0	0	51	42	210	813	0		0	0
5:15 PM	0	57	0	11					0	9	42	0	0	0	60	31	210		0		0	0
5:30 PM	0	62	0	4					0	8	41	0	0	0	59	36	210		0		0	0
5:45 PM	0	46	0	11					0	3	41	0	0	0	53	29	183		0		0	0
Count Total	0	458	0	80					0	57	335	0	0	0	452	286	1,668		0		0	0
Peak Hour	0	238	0	36					0	28	176	0	0	0	229	148	855		0		0	0

All Traffic Data Services Inc.

(303) 216-2439
www.alltrafficdata.net

Location: 6 SPRING GLEN DR & MESA RIDGE PKWY PM
Date: Tuesday, April 28, 2020
Peak Hour: 04:45 PM - 05:45 PM
Peak 15-Minutes: 05:00 PM - 05:15 PM

Peak Hour - All Vehicles

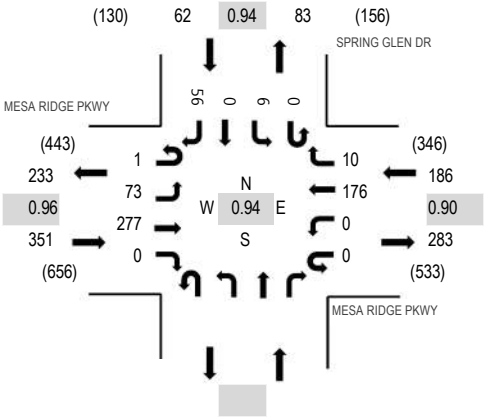

Peak Hour - Pedestrians/Bicycles on Crosswalk

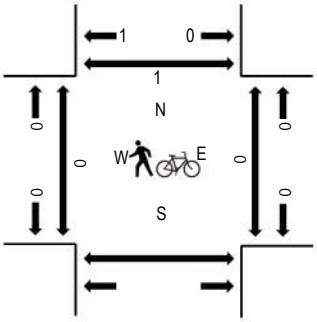

Note: Total study counts contained in parentheses.

Traffic Counts

Interval Start Time	MESA RIDGE PKWY Eastbound				MESA RIDGE PKWY Westbound				Northbound				SPRING GLEN DR Southbound				Total	Rolling Hour	Pedestrian Crossings		
	U-Turn	Left	Thru	Right	U-Turn	Left	Thru	Right	U-Turn	Left	Thru	Right	U-Turn	Left	Thru	Right			West	East	South	North
4:00 PM	0	15	63	0	0	0	38	1					0	4	0	15	136	565	0	0		0
4:15 PM	0	19	68	0	0	0	39	4					0	0	0	13	143	588	0	0		0
4:30 PM	0	20	57	0	0	0	44	1					0	3	0	15	140	592	0	0		0
4:45 PM	0	14	72	0	0	0	46	2					0	1	0	11	146	599	0	0		1
5:00 PM	1	17	73	0	0	0	48	4					0	2	0	14	159	567	0	0		0
5:15 PM	0	23	67	0	0	0	37	2					0	1	0	17	147		0	0		0
5:30 PM	0	19	65	0	0	0	45	2					0	2	0	14	147		0	0		0
5:45 PM	0	12	51	0	0	0	32	1					0	4	0	14	114		0	0		0
Count Total	1	139	516	0	0	0	329	17					0	17	0	113	1,132		0	0		1
Peak Hour	1	73	277	0	0	0	176	10					0	6	0	56	599		0	0		1

All Traffic Data Services Inc.

(303) 216-2439
www.alltrafficdata.net

Location: 7 AUTUMN GLEN AVE & MESA RIDGE PKWY PM
Date: Tuesday, April 28, 2020
Peak Hour: 04:45 PM - 05:45 PM
Peak 15-Minutes: 05:30 PM - 05:45 PM

Peak Hour - All Vehicles

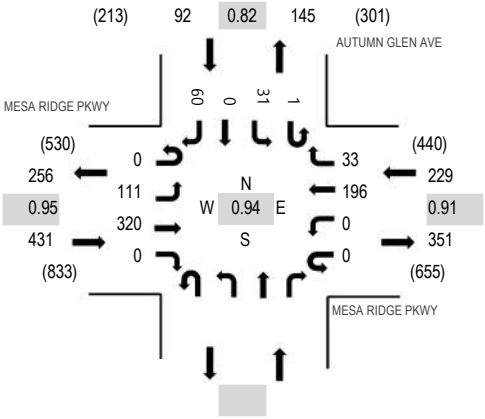

Peak Hour - Pedestrians/Bicycles on Crosswalk

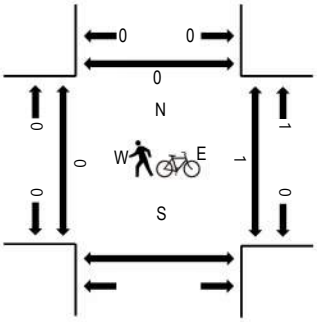

Note: Total study counts contained in parentheses.

Traffic Counts

Interval Start Time	MESA RIDGE PKWY Eastbound				MESA RIDGE PKWY Westbound				Northbound				AUTUMN GLEN AVE Southbound				Total	Rolling Hour	Pedestrian Crossings		
	U-Turn	Left	Thru	Right	U-Turn	Left	Thru	Right	U-Turn	Left	Thru	Right	U-Turn	Left	Thru	Right			West	East	South North
4:00 PM	0	31	75	0	0	0	42	10					1	8	0	27	194	745	0	0	0
4:15 PM	0	26	73	0	0	0	45	6					0	9	0	25	184	742	0	3	0
4:30 PM	0	28	77	0	0	0	52	9					0	4	0	13	183	734	0	3	0
4:45 PM	0	24	73	0	0	0	48	8					1	12	0	18	184	752	0	0	0
5:00 PM	0	25	89	0	0	0	47	12					0	6	0	12	191	741	0	0	0
5:15 PM	0	30	76	0	0	0	46	5					0	8	0	11	176		0	0	0
5:30 PM	0	32	82	0	0	0	55	8					0	5	0	19	201		0	0	0
5:45 PM	0	38	54	0	0	0	42	5					2	4	0	28	173		0	0	0
Count Total	0	234	599	0	0	0	377	63					4	56	0	153	1,486		0	6	0
Peak Hour	0	111	320	0	0	0	196	33					1	31	0	60	752		0	0	0

All Traffic Data Services Inc.

(303) 216-2439
www.alltrafficdata.net

Location: 8 WAYFARER DR & MESA RIDGE PKWY PM
Date: Tuesday, April 28, 2020
Peak Hour: 04:45 PM - 05:45 PM
Peak 15-Minutes: 05:30 PM - 05:45 PM

Peak Hour - All Vehicles

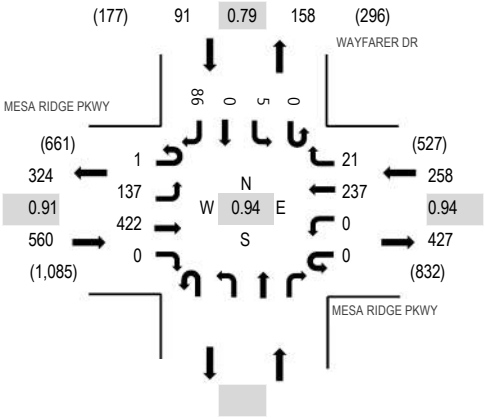

Note: Total study counts contained in parentheses.

Peak Hour - Pedestrians/Bicycles on Crosswalk

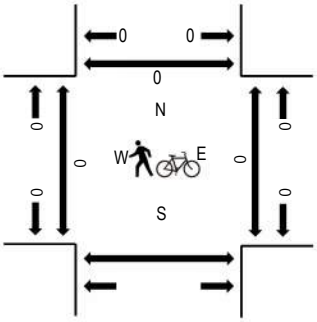

Traffic Counts

Interval Start Time	MESA RIDGE PKWY Eastbound				MESA RIDGE PKWY Westbound				Northbound				WAYFARER DR Southbound				Total	Rolling Hour	Pedestrian Crossings		
	U-Turn	Left	Thru	Right	U-Turn	Left	Thru	Right	U-Turn	Left	Thru	Right	U-Turn	Left	Thru	Right			West	East	South	North
4:00 PM	0	33	106	0	0	0	65	2					0	3	0	27	236	892	0	0		0
4:15 PM	0	31	96	0	0	0	67	4					0	1	0	18	217	897	0	0		0
4:30 PM	0	35	105	0	0	0	61	2					0	2	0	22	227	893	0	0		0
4:45 PM	0	35	90	0	0	0	61	4					0	3	0	19	212	909	0	0		0
5:00 PM	0	41	113	0	0	0	55	6					0	1	0	25	241	897	0	0		0
5:15 PM	1	30	108	0	0	0	54	6					0	0	0	14	213		0	0		0
5:30 PM	0	31	111	0	0	0	67	5					0	1	0	28	243		0	0		0
5:45 PM	0	29	90	0	0	0	66	2					0	2	0	11	200		0	0		0
Count Total	1	265	819	0	0	0	496	31					0	13	0	164	1,789		0	0		0
Peak Hour	1	137	422	0	0	0	237	21					0	5	0	86	909		0	0		0

All Traffic Data Services Inc.

(303) 216-2439
www.alltrafficdata.net

Location: 9 POWERS BLVD & MESA RIDGE PKWY PM
Date: Tuesday, April 28, 2020
Peak Hour: 04:00 PM - 05:00 PM
Peak 15-Minutes: 04:00 PM - 04:15 PM

Peak Hour - All Vehicles

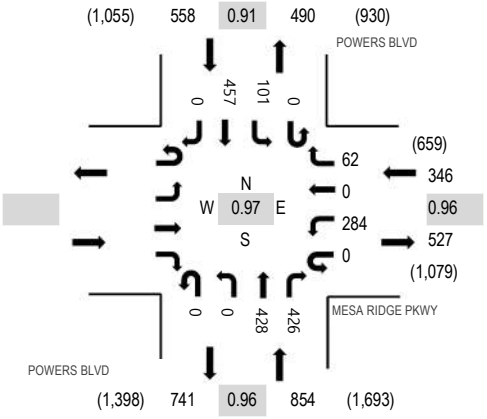

Note: Total study counts contained in parentheses.

Peak Hour - Pedestrians/Bicycles on Crosswalk

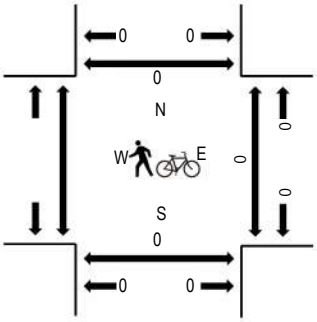

Traffic Counts

Interval Start Time	Eastbound U-Turn	Eastbound Left	Eastbound Thru	Eastbound Right	MESA RIDGE PKWY Westbound U-Turn	Westbound Left	Westbound Thru	Westbound Right	POWERS BLVD Northbound U-Turn	Northbound Left	Northbound Thru	Northbound Right	POWERS BLVD Southbound U-Turn	Southbound Left	Southbound Thru	Southbound Right	Total	Rolling Hour	Pedestrian Crossings West	East	South	North
4:00 PM					0	73	0	16	0	0	115	111	0	25	113	0	453	1,758		0	0	0
4:15 PM					0	71	0	19	0	0	109	102	0	28	94	0	423	1,720		0	0	0
4:30 PM					0	76	0	10	0	0	89	109	0	29	125	0	438	1,725		0	0	0
4:45 PM					0	64	0	17	0	0	115	104	0	19	125	0	444	1,697		0	0	0
5:00 PM					0	70	0	11	0	0	90	118	0	33	93	0	415	1,649		0	0	0
5:15 PM					0	57	0	11	0	0	110	114	0	29	107	0	428			0	0	0
5:30 PM					0	70	0	18	0	0	99	112	0	24	87	0	410			0	0	0
5:45 PM					0	64	0	12	0	0	89	107	0	15	109	0	396			0	0	0
Count Total					0	545	0	114	0	0	816	877	0	202	853	0	3,407			0	0	0
Peak Hour					0	284	0	62	0	0	428	426	0	101	457	0	1,758			0	0	0

Appendix B

2020 EXISTING TRAFFIC LEVEL OF SERVICE OUTPUT

Lane Group	EBL	EBT	EBR	WBL	WBT	WBR	NBL	NBT	NBR	SBL	SBT	SBR
Lane Group Flow (vph)	126	56	11	135	74	37	33	373	30	69	392	43
v/c Ratio	0.41	0.13	0.03	0.43	0.17	0.09	0.06	0.17	0.03	0.11	0.18	0.04
Control Delay	16.2	11.6	3.3	16.5	12.0	5.3	5.9	5.4	2.9	6.3	5.5	2.7
Queue Delay	0.0	0.0	0.0	0.0	0.0	0.0	0.0	0.0	0.0	0.0	0.0	0.0
Total Delay	16.2	11.6	3.3	16.5	12.0	5.3	5.9	5.4	2.9	6.3	5.5	2.7
Queue Length 50th (ft)	22	9	0	24	12	0	3	18	0	6	19	0
Queue Length 95th (ft)	49	25	4	57	33	13	13	41	8	20	37	8
Internal Link Dist (ft)		911			760			1157			1874	
Turn Bay Length (ft)	135		450	200		400	700		600			490
Base Capacity (vph)	1215	1714	1459	1234	1714	1460	591	2159	977	602	2159	982
Starvation Cap Reductn	0	0	0	0	0	0	0	0	0	0	0	0
Spillback Cap Reductn	0	0	0	0	0	0	0	0	0	0	0	0
Storage Cap Reductn	0	0	0	0	0	0	0	0	0	0	0	0
Reduced v/c Ratio	0.10	0.03	0.01	0.11	0.04	0.03	0.06	0.17	0.03	0.11	0.18	0.04

Intersection Summary

Movement	EBL	EBT	EBR	WBL	WBT	WBR	NBL	NBT	NBR	SBL	SBT	SBR
Lane Configurations												
Traffic Volume (veh/h)	106	47	9	127	70	35	28	321	26	53	302	33
Future Volume (veh/h)	106	47	9	127	70	35	28	321	26	53	302	33
Initial Q (Qb), veh	0	0	0	0	0	0	0	0	0	0	0	0
Ped-Bike Adj(A_pbT)	1.00		1.00	1.00		1.00	1.00		1.00	1.00		1.00
Parking Bus, Adj	1.00	1.00	1.00	1.00	1.00	1.00	1.00	1.00	1.00	1.00	1.00	1.00
Work Zone On Approach		No			No			No			No	
Adj Sat Flow, veh/h/ln	1870	1870	1870	1870	1870	1870	1870	1870	1870	1870	1870	1870
Adj Flow Rate, veh/h	126	56	0	135	74	0	33	373	0	69	392	0
Peak Hour Factor	0.84	0.84	0.84	0.94	0.94	0.94	0.86	0.86	0.86	0.77	0.77	0.77
Percent Heavy Veh, %	2	2	2	2	2	2	2	2	2	2	2	2
Cap, veh/h	411	359		426	359		699	1980		711	1980	
Arrive On Green	0.19	0.19	0.00	0.19	0.19	0.00	0.56	0.56	0.00	0.56	0.56	0.00
Sat Flow, veh/h	1326	1870	1585	1348	1870	1585	992	3554	1585	1009	3554	1585
Grp Volume(v), veh/h	126	56	0	135	74	0	33	373	0	69	392	0
Grp Sat Flow(s),veh/h/ln	1326	1870	1585	1348	1870	1585	992	1777	1585	1009	1777	1585
Q Serve(g_s), s	3.2	0.9	0.0	3.3	1.2	0.0	0.6	1.9	0.0	1.3	2.0	0.0
Cycle Q Clear(g_c), s	4.4	0.9	0.0	4.2	1.2	0.0	2.6	1.9	0.0	3.2	2.0	0.0
Prop In Lane	1.00		1.00	1.00		1.00	1.00		1.00	1.00		1.00
Lane Grp Cap(c), veh/h	411	359		426	359		699	1980		711	1980	
V/C Ratio(X)	0.31	0.16		0.32	0.21		0.05	0.19		0.10	0.20	
Avail Cap(c_a), veh/h	1486	1876		1518	1876		699	1980		711	1980	
HCM Platoon Ratio	1.00	1.00	1.00	1.00	1.00	1.00	1.00	1.00	1.00	1.00	1.00	1.00
Upstream Filter(I)	1.00	1.00	0.00	1.00	1.00	0.00	1.00	1.00	0.00	1.00	1.00	0.00
Uniform Delay (d), s/veh	14.0	12.1	0.0	13.8	12.2	0.0	4.6	3.9	0.0	4.7	4.0	0.0
Incr Delay (d2), s/veh	0.4	0.2	0.0	0.4	0.3	0.0	0.1	0.2	0.0	0.3	0.2	0.0
Initial Q Delay(d3),s/veh	0.0	0.0	0.0	0.0	0.0	0.0	0.0	0.0	0.0	0.0	0.0	0.0
%ile BackOfQ(50%),veh/ln	0.8	0.3	0.0	0.9	0.4	0.0	0.1	0.4	0.0	0.2	0.4	0.0
Unsig. Movement Delay, s/veh												
LnGrp Delay(d),s/veh	14.5	12.3	0.0	14.3	12.5	0.0	4.7	4.1	0.0	5.0	4.2	0.0
LnGrp LOS	B	B		B	B		A	A		A	A	
Approach Vol, veh/h		182	A		209	A		406	A		461	A
Approach Delay, s/veh		13.8			13.6			4.2			4.3	
Approach LOS		B			B			A			A	

Timer - Assigned Phs		2		4		6		8				
Phs Duration (G+Y+Rc), s		24.5		11.4		24.5		11.4				
Change Period (Y+Rc), s		4.5		4.5		4.5		4.5				
Max Green Setting (Gmax), s		20.0		36.0		20.0		36.0				
Max Q Clear Time (g_c+I1), s		4.6		6.4		5.2		6.2				
Green Ext Time (p_c), s		2.3		0.7		2.5		0.8				

Intersection Summary	
HCM 6th Ctrl Delay	7.2
HCM 6th LOS	A

Notes

Unsignalized Delay for [NBR, EBR, WBR, SBR] is excluded from calculations of the approach delay and intersection delay.

Intersection	
Int Delay, s/veh	0.6

Movement	EBT	EBR	WBL	WBT	NBL	NBR
Lane Configurations						
Traffic Vol, veh/h	102	8	1	200	12	2
Future Vol, veh/h	102	8	1	200	12	2
Conflicting Peds, #/hr	0	0	0	0	0	0
Sign Control	Free	Free	Free	Free	Stop	Stop
RT Channelized	-	None	-	None	-	None
Storage Length	-	-	-	-	0	-
Veh in Median Storage, #	0	-	-	0	0	-
Grade, %	0	-	-	0	0	-
Peak Hour Factor	88	88	88	88	63	63
Heavy Vehicles, %	2	2	2	2	2	2
Mvmt Flow	116	9	1	227	19	3

Major/Minor	Major1		Major2		Minor1	
Conflicting Flow All	0	0	125	0	350	121
Stage 1	-	-	-	-	121	-
Stage 2	-	-	-	-	229	-
Critical Hdwy	-	-	4.12	-	6.42	6.22
Critical Hdwy Stg 1	-	-	-	-	5.42	-
Critical Hdwy Stg 2	-	-	-	-	5.42	-
Follow-up Hdwy	-	-	2.218	-	3.518	3.318
Pot Cap-1 Maneuver	-	-	1462	-	647	930
Stage 1	-	-	-	-	904	-
Stage 2	-	-	-	-	809	-
Platoon blocked, %	-	-		-		
Mov Cap-1 Maneuver	-	-	1462	-	646	930
Mov Cap-2 Maneuver	-	-	-	-	646	-
Stage 1	-	-	-	-	904	-
Stage 2	-	-	-	-	808	-

Approach	EB	WB	NB
HCM Control Delay, s	0	0	10.5
HCM LOS			B

Minor Lane/Major Mvmt	NBLn1	EBT	EBR	WBL	WBT
Capacity (veh/h)	675	-	-	1462	-
HCM Lane V/C Ratio	0.033	-	-	0.001	-
HCM Control Delay (s)	10.5	-	-	7.5	0
HCM Lane LOS	B	-	-	A	A
HCM 95th %tile Q(veh)	0.1	-	-	0	-

Lane Group	EBL	EBT	EBR	WBL	WBT	WBR	NBL	NBT	NBR	SBL	SBT	SBR
Lane Group Flow (vph)	15	108	21	93	142	116	32	232	71	78	124	9
v/c Ratio	0.06	0.16	0.07	0.39	0.21	0.30	0.04	0.18	0.06	0.10	0.10	0.01
Control Delay	16.0	16.5	7.3	21.8	17.0	6.3	4.8	5.0	1.8	5.1	4.8	1.1
Queue Delay	0.0	0.0	0.0	0.0	0.0	0.0	0.0	0.0	0.0	0.0	0.0	0.0
Total Delay	16.0	16.5	7.3	21.8	17.0	6.3	4.8	5.0	1.8	5.1	4.8	1.1
Queue Length 50th (ft)	4	13	0	23	17	0	3	22	0	7	11	0
Queue Length 95th (ft)	13	25	10	55	35	30	12	54	10	26	35	2
Internal Link Dist (ft)		664			834			2595			1908	
Turn Bay Length (ft)	225		100				455		455	385		385
Base Capacity (vph)	630	1809	821	651	1809	866	869	1284	1113	788	1284	1099
Starvation Cap Reductn	0	0	0	0	0	0	0	0	0	0	0	0
Spillback Cap Reductn	0	0	0	0	0	0	0	0	0	0	0	0
Storage Cap Reductn	0	0	0	0	0	0	0	0	0	0	0	0
Reduced v/c Ratio	0.02	0.06	0.03	0.14	0.08	0.13	0.04	0.18	0.06	0.10	0.10	0.01

Intersection Summary

Movement	EBL	EBT	EBR	WBL	WBT	WBR	NBL	NBT	NBR	SBL	SBT	SBR
Lane Configurations												
Traffic Volume (veh/h)	12	86	17	88	135	110	26	190	58	71	113	8
Future Volume (veh/h)	12	86	17	88	135	110	26	190	58	71	113	8
Initial Q (Qb), veh	0	0	0	0	0	0	0	0	0	0	0	0
Ped-Bike Adj(A_pbT)	1.00		1.00	1.00		1.00	1.00		1.00	1.00		1.00
Parking Bus, Adj	1.00	1.00	1.00	1.00	1.00	1.00	1.00	1.00	1.00	1.00	1.00	1.00
Work Zone On Approach		No			No			No			No	
Adj Sat Flow, veh/h/ln	1870	1870	1870	1870	1870	1870	1870	1870	1870	1870	1870	1870
Adj Flow Rate, veh/h	15	108	0	93	142	0	32	232	0	78	124	0
Peak Hour Factor	0.80	0.80	0.80	0.95	0.95	0.95	0.82	0.82	0.82	0.91	0.91	0.91
Percent Heavy Veh, %	2	2	2	2	2	2	2	2	2	2	2	2
Cap, veh/h	306	560		322	560		946	1216		844	1216	
Arrive On Green	0.16	0.16	0.00	0.16	0.16	0.00	0.65	0.65	0.00	0.65	0.65	0.00
Sat Flow, veh/h	1246	3554	1585	1286	3554	1585	1267	1870	1585	1148	1870	1585
Grp Volume(v), veh/h	15	108	0	93	142	0	32	232	0	78	124	0
Grp Sat Flow(s),veh/h/ln	1246	1777	1585	1286	1777	1585	1267	1870	1585	1148	1870	1585
Q Serve(g_s), s	0.5	1.2	0.0	3.2	1.6	0.0	0.5	2.3	0.0	1.4	1.2	0.0
Cycle Q Clear(g_c), s	2.1	1.2	0.0	4.4	1.6	0.0	1.6	2.3	0.0	3.7	1.2	0.0
Prop In Lane	1.00		1.00	1.00		1.00	1.00		1.00	1.00		1.00
Lane Grp Cap(c), veh/h	306	560		322	560		946	1216		844	1216	
V/C Ratio(X)	0.05	0.19		0.29	0.25		0.03	0.19		0.09	0.10	
Avail Cap(c_a), veh/h	788	1932		819	1932		946	1216		844	1216	
HCM Platoon Ratio	1.00	1.00	1.00	1.00	1.00	1.00	1.00	1.00	1.00	1.00	1.00	1.00
Upstream Filter(I)	1.00	1.00	0.00	1.00	1.00	0.00	1.00	1.00	0.00	1.00	1.00	0.00
Uniform Delay (d), s/veh	18.3	17.2	0.0	19.1	17.3	0.0	3.4	3.3	0.0	4.0	3.1	0.0
Incr Delay (d2), s/veh	0.1	0.2	0.0	0.5	0.2	0.0	0.1	0.3	0.0	0.2	0.2	0.0
Initial Q Delay(d3),s/veh	0.0	0.0	0.0	0.0	0.0	0.0	0.0	0.0	0.0	0.0	0.0	0.0
%ile BackOfQ(50%),veh/ln	0.1	0.5	0.0	0.9	0.6	0.0	0.1	0.6	0.0	0.2	0.3	0.0
Unsig. Movement Delay, s/veh												
LnGrp Delay(d),s/veh	18.3	17.3	0.0	19.6	17.6	0.0	3.4	3.6	0.0	4.2	3.2	0.0
LnGrp LOS	B	B		B	B		A	A		A	A	
Approach Vol, veh/h		123	A		235	A		264	A		202	A
Approach Delay, s/veh		17.4			18.4			3.6			3.6	
Approach LOS		B			B			A			A	

Timer - Assigned Phs		2		4		6		8				
Phs Duration (G+Y+Rc), s		35.0		11.9		35.0		11.9				
Change Period (Y+Rc), s		4.5		4.5		4.5		4.5				
Max Green Setting (Gmax), s		30.5		25.5		30.5		25.5				
Max Q Clear Time (g_c+I1), s		4.3		4.1		5.7		6.4				
Green Ext Time (p_c), s		1.5		0.6		0.9		1.1				

Intersection Summary	
HCM 6th Ctrl Delay	9.9
HCM 6th LOS	A

Notes

Unsignalized Delay for [NBR, EBR, WBR, SBR] is excluded from calculations of the approach delay and intersection delay.

Intersection	
Int Delay, s/veh	2.2

Movement	WBL	WBR	NBT	NBR	SBL	SBT
Lane Configurations						
Traffic Vol, veh/h	55	22	253	33	16	198
Future Vol, veh/h	55	22	253	33	16	198
Conflicting Peds, #/hr	0	0	0	0	0	0
Sign Control	Stop	Stop	Free	Free	Free	Free
RT Channelized	-	None	-	None	-	None
Storage Length	250	0	-	250	400	-
Veh in Median Storage, #	0	-	0	-	-	0
Grade, %	0	-	0	-	-	0
Peak Hour Factor	64	64	81	81	85	85
Heavy Vehicles, %	2	2	2	2	2	2
Mvmt Flow	86	34	312	41	19	233

Major/Minor	Minor1		Major1		Major2	
Conflicting Flow All	583	312	0	0	353	0
Stage 1	312	-	-	-	-	-
Stage 2	271	-	-	-	-	-
Critical Hdwy	6.42	6.22	-	-	4.12	-
Critical Hdwy Stg 1	5.42	-	-	-	-	-
Critical Hdwy Stg 2	5.42	-	-	-	-	-
Follow-up Hdwy	3.518	3.318	-	-	2.218	-
Pot Cap-1 Maneuver	475	728	-	-	1206	-
Stage 1	742	-	-	-	-	-
Stage 2	775	-	-	-	-	-
Platoon blocked, %			-	-		-
Mov Cap-1 Maneuver	467	728	-	-	1206	-
Mov Cap-2 Maneuver	556	-	-	-	-	-
Stage 1	742	-	-	-	-	-
Stage 2	763	-	-	-	-	-

Approach	WB	NB	SB
HCM Control Delay, s	12	0	0.6
HCM LOS	B		

Minor Lane/Major Mvmt	NBT	NBR	WBLn1	WBLn2	SBL	SBT
Capacity (veh/h)	-	-	556	728	1206	-
HCM Lane V/C Ratio	-	-	0.155	0.047	0.016	-
HCM Control Delay (s)	-	-	12.7	10.2	8	-
HCM Lane LOS	-	-	B	B	A	-
HCM 95th %tile Q(veh)	-	-	0.5	0.1	0	-

Intersection	
Int Delay, s/veh	2.9

Movement	EBL	EBR	NBL	NBT	SBT	SBR
Lane Configurations						
Traffic Vol, veh/h	112	19	20	163	128	145
Future Vol, veh/h	112	19	20	163	128	145
Conflicting Peds, #/hr	0	0	0	0	0	0
Sign Control	Stop	Stop	Free	Free	Free	Free
RT Channelized	-	None	-	None	-	None
Storage Length	300	0	-	-	-	500
Veh in Median Storage, #	0	-	-	0	0	-
Grade, %	0	-	-	0	0	-
Peak Hour Factor	87	87	90	90	91	91
Heavy Vehicles, %	2	2	2	2	2	2
Mvmt Flow	129	22	22	181	141	159

Major/Minor	Minor2		Major1		Major2	
Conflicting Flow All	366	141	300	0	-	0
Stage 1	141	-	-	-	-	-
Stage 2	225	-	-	-	-	-
Critical Hdwy	6.42	6.22	4.12	-	-	-
Critical Hdwy Stg 1	5.42	-	-	-	-	-
Critical Hdwy Stg 2	5.42	-	-	-	-	-
Follow-up Hdwy	3.518	3.318	2.218	-	-	-
Pot Cap-1 Maneuver	634	907	1261	-	-	-
Stage 1	886	-	-	-	-	-
Stage 2	812	-	-	-	-	-
Platoon blocked, %				-	-	-
Mov Cap-1 Maneuver	622	907	1261	-	-	-
Mov Cap-2 Maneuver	666	-	-	-	-	-
Stage 1	869	-	-	-	-	-
Stage 2	812	-	-	-	-	-

Approach	EB	NB	SB
HCM Control Delay, s	11.3	0.9	0
HCM LOS	B		

Minor Lane/Major Mvmt	NBL	NBT	EBLn1	EBLn2	SBT	SBR
Capacity (veh/h)	1261	-	666	907	-	-
HCM Lane V/C Ratio	0.018	-	0.193	0.024	-	-
HCM Control Delay (s)	7.9	0	11.7	9.1	-	-
HCM Lane LOS	A	A	B	A	-	-
HCM 95th %tile Q(veh)	0.1	-	0.7	0.1	-	-

Intersection	
Int Delay, s/veh	2.3

Movement	EBL	EBT	WBT	WBR	SBL	SBR
Lane Configurations						
Traffic Vol, veh/h	35	122	162	9	5	47
Future Vol, veh/h	35	122	162	9	5	47
Conflicting Peds, #/hr	0	0	0	0	0	0
Sign Control	Free	Free	Free	Free	Stop	Stop
RT Channelized	-	None	-	None	-	None
Storage Length	485	-	-	-	0	-
Veh in Median Storage, #	-	0	0	-	0	-
Grade, %	-	0	0	-	0	-
Peak Hour Factor	81	81	95	95	75	75
Heavy Vehicles, %	2	2	2	2	2	2
Mvmt Flow	43	151	171	9	7	63

Major/Minor	Major1		Major2		Minor2	
Conflicting Flow All	180	0	-	0	413	176
Stage 1	-	-	-	-	176	-
Stage 2	-	-	-	-	237	-
Critical Hdwy	4.12	-	-	-	6.42	6.22
Critical Hdwy Stg 1	-	-	-	-	5.42	-
Critical Hdwy Stg 2	-	-	-	-	5.42	-
Follow-up Hdwy	2.218	-	-	-	3.518	3.318
Pot Cap-1 Maneuver	1396	-	-	-	595	867
Stage 1	-	-	-	-	855	-
Stage 2	-	-	-	-	802	-
Platoon blocked, %		-	-	-		
Mov Cap-1 Maneuver	1396	-	-	-	577	867
Mov Cap-2 Maneuver	-	-	-	-	635	-
Stage 1	-	-	-	-	828	-
Stage 2	-	-	-	-	802	-

Approach	EB	WB	SB
HCM Control Delay, s	1.7	0	9.7
HCM LOS			A

Minor Lane/Major Mvmt	EBL	EBT	WBT	WBR	SBLn1
Capacity (veh/h)	1396	-	-	-	838
HCM Lane V/C Ratio	0.031	-	-	-	0.083
HCM Control Delay (s)	7.7	-	-	-	9.7
HCM Lane LOS	A	-	-	-	A
HCM 95th %tile Q(veh)	0.1	-	-	-	0.3

Intersection	
Int Delay, s/veh	2.3

Movement	EBL	EBT	WBT	WBR	SBL	SBR
Lane Configurations						
Traffic Vol, veh/h	19	140	198	5	12	62
Future Vol, veh/h	19	140	198	5	12	62
Conflicting Peds, #/hr	0	0	0	0	0	0
Sign Control	Free	Free	Free	Free	Stop	Stop
RT Channelized	-	None	-	None	-	None
Storage Length	325	-	-	275	250	0
Veh in Median Storage, #	-	0	0	-	0	-
Grade, %	-	0	0	-	0	-
Peak Hour Factor	86	86	89	89	76	76
Heavy Vehicles, %	2	2	2	2	2	2
Mvmt Flow	22	163	222	6	16	82

Major/Minor	Major1		Major2		Minor2	
Conflicting Flow All	228	0	-	0	429	222
Stage 1	-	-	-	-	222	-
Stage 2	-	-	-	-	207	-
Critical Hdwy	4.12	-	-	-	6.42	6.22
Critical Hdwy Stg 1	-	-	-	-	5.42	-
Critical Hdwy Stg 2	-	-	-	-	5.42	-
Follow-up Hdwy	2.218	-	-	-	3.518	3.318
Pot Cap-1 Maneuver	1340	-	-	-	583	818
Stage 1	-	-	-	-	815	-
Stage 2	-	-	-	-	828	-
Platoon blocked, %		-	-	-		
Mov Cap-1 Maneuver	1340	-	-	-	574	818
Mov Cap-2 Maneuver	-	-	-	-	574	-
Stage 1	-	-	-	-	802	-
Stage 2	-	-	-	-	828	-

Approach	EB	WB	SB
HCM Control Delay, s	0.9	0	10.1
HCM LOS			B

Minor Lane/Major Mvmt	EBL	EBT	WBT	WBR	SBLn1	SBLn2
Capacity (veh/h)	1340	-	-	-	574	818
HCM Lane V/C Ratio	0.016	-	-	-	0.028	0.1
HCM Control Delay (s)	7.7	-	-	-	11.4	9.9
HCM Lane LOS	A	-	-	-	B	A
HCM 95th %tile Q(veh)	0.1	-	-	-	0.1	0.3

Intersection	
Int Delay, s/veh	2.6

Movement	EBL	EBT	WBT	WBR	SBL	SBR
Lane Configurations						
Traffic Vol, veh/h	48	156	260	9	9	91
Future Vol, veh/h	48	156	260	9	9	91
Conflicting Peds, #/hr	0	0	0	0	0	0
Sign Control	Free	Free	Free	Free	Stop	Stop
RT Channelized	-	None	-	None	-	None
Storage Length	300	-	-	250	0	125
Veh in Median Storage, #	-	0	0	-	0	-
Grade, %	-	0	0	-	0	-
Peak Hour Factor	88	88	89	89	84	84
Heavy Vehicles, %	2	2	2	2	2	2
Mvmt Flow	55	177	292	10	11	108

Major/Minor	Major1		Major2		Minor2	
Conflicting Flow All	302	0	-	0	579	292
Stage 1	-	-	-	-	292	-
Stage 2	-	-	-	-	287	-
Critical Hdwy	4.12	-	-	-	6.42	6.22
Critical Hdwy Stg 1	-	-	-	-	5.42	-
Critical Hdwy Stg 2	-	-	-	-	5.42	-
Follow-up Hdwy	2.218	-	-	-	3.518	3.318
Pot Cap-1 Maneuver	1259	-	-	-	477	747
Stage 1	-	-	-	-	758	-
Stage 2	-	-	-	-	762	-
Platoon blocked, %		-	-	-		
Mov Cap-1 Maneuver	1259	-	-	-	456	747
Mov Cap-2 Maneuver	-	-	-	-	456	-
Stage 1	-	-	-	-	725	-
Stage 2	-	-	-	-	762	-

Approach	EB	WB	SB
HCM Control Delay, s	1.9	0	10.8
HCM LOS			B

Minor Lane/Major Mvmt	EBL	EBT	WBT	WBR	SBLn1	SBLn2
Capacity (veh/h)	1259	-	-	-	456	747
HCM Lane V/C Ratio	0.043	-	-	-	0.023	0.145
HCM Control Delay (s)	8	-	-	-	13.1	10.6
HCM Lane LOS	A	-	-	-	B	B
HCM 95th %tile Q(veh)	0.1	-	-	-	0.1	0.5

Lane Group	WBL	WBR	NBT	NBR	SBL	SBT
Lane Group Flow (vph)	297	56	287	207	20	372
v/c Ratio	0.63	0.12	0.15	0.21	0.03	0.19
Control Delay	22.2	5.1	6.5	2.0	6.8	6.6
Queue Delay	0.0	0.0	0.0	0.0	0.0	0.0
Total Delay	22.2	5.1	6.5	2.0	6.8	6.6
Queue Length 50th (ft)	73	0	18	0	2	24
Queue Length 95th (ft)	133	18	40	23	12	54
Internal Link Dist (ft)	1938		1222			1449
Turn Bay Length (ft)	325			150	1000	
Base Capacity (vph)	1040	953	1960	969	594	1960
Starvation Cap Reductn	0	0	0	0	0	0
Spillback Cap Reductn	0	0	0	0	0	0
Storage Cap Reductn	0	0	0	0	0	0
Reduced v/c Ratio	0.29	0.06	0.15	0.21	0.03	0.19

Intersection Summary

Movement	WBL	WBR	NBT	NBR	SBL	SBT
Lane Configurations						
Traffic Volume (veh/h)	279	53	250	180	19	350
Future Volume (veh/h)	279	53	250	180	19	350
Initial Q (Qb), veh	0	0	0	0	0	0
Ped-Bike Adj(A_pbT)	1.00	1.00		1.00	1.00	
Parking Bus, Adj	1.00	1.00	1.00	1.00	1.00	1.00
Work Zone On Approach	No		No			No
Adj Sat Flow, veh/h/ln	1870	1870	1870	1870	1870	1870
Adj Flow Rate, veh/h	297	56	287	207	20	372
Peak Hour Factor	0.94	0.94	0.87	0.87	0.94	0.94
Percent Heavy Veh, %	2	2	2	2	2	2
Cap, veh/h	392	349	2069	923	651	2069
Arrive On Green	0.22	0.22	0.58	0.58	0.58	0.58
Sat Flow, veh/h	1781	1585	3647	1585	903	3647
Grp Volume(v), veh/h	297	56	287	207	20	372
Grp Sat Flow(s),veh/h/ln	1781	1585	1777	1585	903	1777
Q Serve(g_s), s	7.1	1.3	1.7	2.9	0.5	2.2
Cycle Q Clear(g_c), s	7.1	1.3	1.7	2.9	2.1	2.2
Prop In Lane	1.00	1.00		1.00	1.00	
Lane Grp Cap(c), veh/h	392	349	2069	923	651	2069
V/C Ratio(X)	0.76	0.16	0.14	0.22	0.03	0.18
Avail Cap(c_a), veh/h	1154	1027	2069	923	651	2069
HCM Platoon Ratio	1.00	1.00	1.00	1.00	1.00	1.00
Upstream Filter(I)	1.00	1.00	1.00	1.00	1.00	1.00
Uniform Delay (d), s/veh	16.6	14.3	4.3	4.6	4.8	4.4
Incr Delay (d2), s/veh	3.0	0.2	0.1	0.6	0.1	0.2
Initial Q Delay(d3),s/veh	0.0	0.0	0.0	0.0	0.0	0.0
%ile BackOfQ(50%),veh/ln	2.8	0.4	0.4	0.7	0.1	0.6
Unsig. Movement Delay, s/veh						
LnGrp Delay(d),s/veh	19.6	14.6	4.5	5.1	4.9	4.6
LnGrp LOS	B	B	A	A	A	A
Approach Vol, veh/h	353		494			392
Approach Delay, s/veh	18.8		4.7			4.6
Approach LOS	B		A			A

Timer - Assigned Phs		2				6	8
Phs Duration (G+Y+Rc), s		31.0				31.0	14.5
Change Period (Y+Rc), s		4.5				4.5	4.5
Max Green Setting (Gmax), s		26.5				26.5	29.5
Max Q Clear Time (g_c+I1), s		4.9				4.2	9.1
Green Ext Time (p_c), s		2.5				2.5	1.0

Intersection Summary	
HCM 6th Ctrl Delay	8.7
HCM 6th LOS	A

Lane Group	EBL	EBT	EBR	WBL	WBT	WBR	NBL	NBT	NBR	SBL	SBT	SBR
Lane Group Flow (vph)	131	193	73	112	165	56	41	424	108	45	507	184
v/c Ratio	0.44	0.43	0.17	0.39	0.36	0.13	0.09	0.22	0.12	0.09	0.26	0.20
Control Delay	17.6	15.7	4.7	16.6	14.7	4.9	6.7	6.1	2.3	6.6	6.3	2.1
Queue Delay	0.0	0.0	0.0	0.0	0.0	0.0	0.0	0.0	0.0	0.0	0.0	0.0
Total Delay	17.6	15.7	4.7	16.6	14.7	4.9	6.7	6.1	2.3	6.6	6.3	2.1
Queue Length 50th (ft)	25	37	0	21	31	0	4	22	0	4	26	0
Queue Length 95th (ft)	58	75	19	45	58	14	18	54	18	19	64	23
Internal Link Dist (ft)		911			760			1157			1874	
Turn Bay Length (ft)	135		450	200		400	700		600			490
Base Capacity (vph)	996	1526	1310	970	1526	1307	469	1919	907	510	1919	942
Starvation Cap Reductn	0	0	0	0	0	0	0	0	0	0	0	0
Spillback Cap Reductn	0	0	0	0	0	0	0	0	0	0	0	0
Storage Cap Reductn	0	0	0	0	0	0	0	0	0	0	0	0
Reduced v/c Ratio	0.13	0.13	0.06	0.12	0.11	0.04	0.09	0.22	0.12	0.09	0.26	0.20

Intersection Summary

Movement	EBL	EBT	EBR	WBL	WBT	WBR	NBL	NBT	NBR	SBL	SBT	SBR
Lane Configurations												
Traffic Volume (veh/h)	123	181	69	92	135	46	38	390	99	43	482	175
Future Volume (veh/h)	123	181	69	92	135	46	38	390	99	43	482	175
Initial Q (Qb), veh	0	0	0	0	0	0	0	0	0	0	0	0
Ped-Bike Adj(A_pbT)	1.00		1.00	1.00		1.00	1.00		1.00	1.00		1.00
Parking Bus, Adj	1.00	1.00	1.00	1.00	1.00	1.00	1.00	1.00	1.00	1.00	1.00	1.00
Work Zone On Approach		No			No			No			No	
Adj Sat Flow, veh/h/ln	1870	1870	1870	1870	1870	1870	1870	1870	1870	1870	1870	1870
Adj Flow Rate, veh/h	131	193	0	112	165	0	41	424	0	45	507	0
Peak Hour Factor	0.94	0.94	0.94	0.82	0.82	0.82	0.92	0.92	0.92	0.95	0.95	0.95
Percent Heavy Veh, %	2	2	2	2	2	2	2	2	2	2	2	2
Cap, veh/h	401	480		379	480		572	1862		618	1862	
Arrive On Green	0.26	0.26	0.00	0.26	0.26	0.00	0.52	0.52	0.00	0.52	0.52	0.00
Sat Flow, veh/h	1221	1870	1585	1190	1870	1585	892	3554	1585	963	3554	1585
Grp Volume(v), veh/h	131	193	0	112	165	0	41	424	0	45	507	0
Grp Sat Flow(s),veh/h/ln	1221	1870	1585	1190	1870	1585	892	1777	1585	963	1777	1585
Q Serve(g_s), s	4.0	3.5	0.0	3.5	3.0	0.0	1.1	2.6	0.0	1.1	3.2	0.0
Cycle Q Clear(g_c), s	7.0	3.5	0.0	7.0	3.0	0.0	4.3	2.6	0.0	3.7	3.2	0.0
Prop In Lane	1.00		1.00	1.00		1.00	1.00		1.00	1.00		1.00
Lane Grp Cap(c), veh/h	401	480		379	480		572	1862		618	1862	
V/C Ratio(X)	0.33	0.40		0.30	0.34		0.07	0.23		0.07	0.27	
Avail Cap(c_a), veh/h	1114	1573		1074	1573		572	1862		618	1862	
HCM Platoon Ratio	1.00	1.00	1.00	1.00	1.00	1.00	1.00	1.00	1.00	1.00	1.00	1.00
Upstream Filter(I)	1.00	1.00	0.00	1.00	1.00	0.00	1.00	1.00	0.00	1.00	1.00	0.00
Uniform Delay (d), s/veh	15.3	12.6	0.0	15.6	12.4	0.0	6.6	5.3	0.0	6.3	5.4	0.0
Incr Delay (d2), s/veh	0.5	0.5	0.0	0.4	0.4	0.0	0.2	0.3	0.0	0.2	0.4	0.0
Initial Q Delay(d3),s/veh	0.0	0.0	0.0	0.0	0.0	0.0	0.0	0.0	0.0	0.0	0.0	0.0
%ile BackOfQ(50%),veh/ln	1.0	1.3	0.0	0.9	1.1	0.0	0.2	0.7	0.0	0.2	0.8	0.0
Unsig. Movement Delay, s/veh												
LnGrp Delay(d),s/veh	15.7	13.2	0.0	16.0	12.9	0.0	6.9	5.6	0.0	6.5	5.8	0.0
LnGrp LOS	B	B		B	B		A	A		A	A	
Approach Vol, veh/h		324	A		277	A		465	A		552	A
Approach Delay, s/veh		14.2			14.1			5.7			5.8	
Approach LOS		B			B			A			A	

Timer - Assigned Phs		2		4		6		8				
Phs Duration (G+Y+Rc), s		26.0		15.0		26.0		15.0				
Change Period (Y+Rc), s		4.5		4.5		4.5		4.5				
Max Green Setting (Gmax), s		21.5		34.5		21.5		34.5				
Max Q Clear Time (g_c+I1), s		6.3		9.0		5.7		9.0				
Green Ext Time (p_c), s		2.6		1.6		3.2		1.3				

Intersection Summary	
HCM 6th Ctrl Delay	8.9
HCM 6th LOS	A

Notes

Unsignalized Delay for [NBR, EBR, WBR, SBR] is excluded from calculations of the approach delay and intersection delay.

Intersection	
Int Delay, s/veh	0.3

Movement	EBT	EBR	WBL	WBT	NBL	NBR
Lane Configurations						
Traffic Vol, veh/h	300	9	3	215	7	4
Future Vol, veh/h	300	9	3	215	7	4
Conflicting Peds, #/hr	0	0	0	0	0	0
Sign Control	Free	Free	Free	Free	Stop	Stop
RT Channelized	-	None	-	None	-	None
Storage Length	-	-	-	-	0	-
Veh in Median Storage, #	0	-	-	0	0	-
Grade, %	0	-	-	0	0	-
Peak Hour Factor	92	92	79	79	88	88
Heavy Vehicles, %	2	2	2	2	2	2
Mvmt Flow	326	10	4	272	8	5

Major/Minor	Major1		Major2		Minor1	
Conflicting Flow All	0	0	336	0	611	331
Stage 1	-	-	-	-	331	-
Stage 2	-	-	-	-	280	-
Critical Hdwy	-	-	4.12	-	6.42	6.22
Critical Hdwy Stg 1	-	-	-	-	5.42	-
Critical Hdwy Stg 2	-	-	-	-	5.42	-
Follow-up Hdwy	-	-	2.218	-	3.518	3.318
Pot Cap-1 Maneuver	-	-	1223	-	457	711
Stage 1	-	-	-	-	728	-
Stage 2	-	-	-	-	767	-
Platoon blocked, %	-	-		-		
Mov Cap-1 Maneuver	-	-	1223	-	455	711
Mov Cap-2 Maneuver	-	-	-	-	455	-
Stage 1	-	-	-	-	728	-
Stage 2	-	-	-	-	764	-

Approach	EB	WB	NB
HCM Control Delay, s	0	0.1	12
HCM LOS			B

Minor Lane/Major Mvmt	NBLn1	EBT	EBR	WBL	WBT
Capacity (veh/h)	524	-	-	1223	-
HCM Lane V/C Ratio	0.024	-	-	0.003	-
HCM Control Delay (s)	12	-	-	8	0
HCM Lane LOS	B	-	-	A	A
HCM 95th %tile Q(veh)	0.1	-	-	0	-

Lane Group	EBL	EBT	EBR	WBL	WBT	WBR	NBL	NBT	NBR	SBL	SBT	SBR
Lane Group Flow (vph)	19	245	44	110	189	107	43	142	168	162	233	18
v/c Ratio	0.07	0.32	0.12	0.46	0.25	0.25	0.06	0.13	0.16	0.22	0.21	0.02
Control Delay	15.2	17.0	6.4	22.9	16.3	5.6	5.6	5.6	1.8	6.5	6.0	2.5
Queue Delay	0.0	0.0	0.0	0.0	0.0	0.0	0.0	0.0	0.0	0.0	0.0	0.0
Total Delay	15.2	17.0	6.4	22.9	16.3	5.6	5.6	5.6	1.8	6.5	6.0	2.5
Queue Length 50th (ft)	4	31	0	28	23	0	4	14	0	17	24	0
Queue Length 95th (ft)	16	51	16	56	38	22	18	44	21	54	69	6
Internal Link Dist (ft)		664			834			2595			1908	
Turn Bay Length (ft)	225		100				455		455	385		385
Base Capacity (vph)	633	1902	871	600	1902	900	687	1121	1019	746	1121	962
Starvation Cap Reductn	0	0	0	0	0	0	0	0	0	0	0	0
Spillback Cap Reductn	0	0	0	0	0	0	0	0	0	0	0	0
Storage Cap Reductn	0	0	0	0	0	0	0	0	0	0	0	0
Reduced v/c Ratio	0.03	0.13	0.05	0.18	0.10	0.12	0.06	0.13	0.16	0.22	0.21	0.02

Intersection Summary

Movement	EBL	EBT	EBR	WBL	WBT	WBR	NBL	NBT	NBR	SBL	SBT	SBR
Lane Configurations												
Traffic Volume (veh/h)	16	208	37	89	153	87	40	131	155	149	214	17
Future Volume (veh/h)	16	208	37	89	153	87	40	131	155	149	214	17
Initial Q (Qb), veh	0	0	0	0	0	0	0	0	0	0	0	0
Ped-Bike Adj(A_pbT)	1.00		1.00	1.00		1.00	1.00		1.00	1.00		1.00
Parking Bus, Adj	1.00	1.00	1.00	1.00	1.00	1.00	1.00	1.00	1.00	1.00	1.00	1.00
Work Zone On Approach		No			No			No			No	
Adj Sat Flow, veh/h/ln	1870	1870	1870	1870	1870	1870	1870	1870	1870	1870	1870	1870
Adj Flow Rate, veh/h	19	245	0	110	189	0	43	142	0	162	233	0
Peak Hour Factor	0.85	0.85	0.85	0.81	0.81	0.81	0.92	0.92	0.92	0.92	0.92	0.92
Percent Heavy Veh, %	2	2	2	2	2	2	2	2	2	2	2	2
Cap, veh/h	354	774		328	774		769	1121		852	1121	
Arrive On Green	0.22	0.22	0.00	0.22	0.22	0.00	0.60	0.60	0.00	0.60	0.60	0.00
Sat Flow, veh/h	1194	3554	1585	1135	3554	1585	1147	1870	1585	1246	1870	1585
Grp Volume(v), veh/h	19	245	0	110	189	0	43	142	0	162	233	0
Grp Sat Flow(s),veh/h/ln	1194	1777	1585	1135	1777	1585	1147	1870	1585	1246	1870	1585
Q Serve(g_s), s	0.7	2.9	0.0	4.4	2.2	0.0	0.9	1.6	0.0	3.2	2.8	0.0
Cycle Q Clear(g_c), s	2.8	2.9	0.0	7.3	2.2	0.0	3.7	1.6	0.0	4.8	2.8	0.0
Prop In Lane	1.00		1.00	1.00		1.00	1.00		1.00	1.00		1.00
Lane Grp Cap(c), veh/h	354	774		328	774		769	1121		852	1121	
V/C Ratio(X)	0.05	0.32		0.34	0.24		0.06	0.13		0.19	0.21	
Avail Cap(c_a), veh/h	737	1913		692	1913		769	1121		852	1121	
HCM Platoon Ratio	1.00	1.00	1.00	1.00	1.00	1.00	1.00	1.00	1.00	1.00	1.00	1.00
Upstream Filter(I)	1.00	1.00	0.00	1.00	1.00	0.00	1.00	1.00	0.00	1.00	1.00	0.00
Uniform Delay (d), s/veh	17.1	16.2	0.0	19.2	15.9	0.0	5.4	4.3	0.0	5.3	4.5	0.0
Incr Delay (d2), s/veh	0.1	0.2	0.0	0.6	0.2	0.0	0.1	0.2	0.0	0.5	0.4	0.0
Initial Q Delay(d3),s/veh	0.0	0.0	0.0	0.0	0.0	0.0	0.0	0.0	0.0	0.0	0.0	0.0
%ile BackOfQ(50%),veh/ln	0.2	1.0	0.0	1.1	0.8	0.0	0.2	0.5	0.0	0.7	0.8	0.0
Unsig. Movement Delay, s/veh												
LnGrp Delay(d),s/veh	17.1	16.4	0.0	19.8	16.1	0.0	5.5	4.5	0.0	5.8	4.9	0.0
LnGrp LOS	B	B		B	B		A	A		A	A	
Approach Vol, veh/h		264	A		299	A		185	A		395	A
Approach Delay, s/veh		16.5			17.5			4.7			5.3	
Approach LOS		B			B			A			A	

Timer - Assigned Phs	2	4	6	8
Phs Duration (G+Y+Rc), s	34.0	15.2	34.0	15.2
Change Period (Y+Rc), s	4.5	4.5	4.5	4.5
Max Green Setting (Gmax), s	29.5	26.5	29.5	26.5
Max Q Clear Time (g_c+I1), s	5.7	4.9	6.8	9.3
Green Ext Time (p_c), s	0.9	1.6	1.9	1.4

Intersection Summary	
HCM 6th Ctrl Delay	11.0
HCM 6th LOS	B

Notes

Unsignalized Delay for [NBR, EBR, WBR, SBR] is excluded from calculations of the approach delay and intersection delay.

Intersection	
Int Delay, s/veh	1.2

Movement	WBL	WBR	NBT	NBR	SBL	SBT
Lane Configurations						
Traffic Vol, veh/h	43	19	308	77	12	350
Future Vol, veh/h	43	19	308	77	12	350
Conflicting Peds, #/hr	0	0	0	0	0	0
Sign Control	Stop	Stop	Free	Free	Free	Free
RT Channelized	-	None	-	None	-	None
Storage Length	250	0	-	250	400	-
Veh in Median Storage, #	0	-	0	-	-	0
Grade, %	0	-	0	-	-	0
Peak Hour Factor	82	82	98	98	93	93
Heavy Vehicles, %	2	2	2	2	2	2
Mvmt Flow	52	23	314	79	13	376

Major/Minor	Minor1		Major1		Major2	
Conflicting Flow All	716	314	0	0	393	0
Stage 1	314	-	-	-	-	-
Stage 2	402	-	-	-	-	-
Critical Hdwy	6.42	6.22	-	-	4.12	-
Critical Hdwy Stg 1	5.42	-	-	-	-	-
Critical Hdwy Stg 2	5.42	-	-	-	-	-
Follow-up Hdwy	3.518	3.318	-	-	2.218	-
Pot Cap-1 Maneuver	397	726	-	-	1166	-
Stage 1	741	-	-	-	-	-
Stage 2	676	-	-	-	-	-
Platoon blocked, %			-	-		-
Mov Cap-1 Maneuver	393	726	-	-	1166	-
Mov Cap-2 Maneuver	499	-	-	-	-	-
Stage 1	741	-	-	-	-	-
Stage 2	669	-	-	-	-	-

Approach	WB	NB	SB
HCM Control Delay, s	12.2	0	0.3
HCM LOS	B		

Minor Lane/Major Mvmt	NBT	NBR	WBLn1	WBLn2	SBL	SBT
Capacity (veh/h)	-	-	499	726	1166	-
HCM Lane V/C Ratio	-	-	0.105	0.032	0.011	-
HCM Control Delay (s)	-	-	13.1	10.1	8.1	-
HCM Lane LOS	-	-	B	B	A	-
HCM 95th %tile Q(veh)	-	-	0.3	0.1	0	-

Intersection	
Int Delay, s/veh	5.4

Movement	EBL	EBR	NBL	NBT	SBT	SBR
Lane Configurations						
Traffic Vol, veh/h	262	40	31	194	252	163
Future Vol, veh/h	262	40	31	194	252	163
Conflicting Peds, #/hr	0	0	0	0	0	0
Sign Control	Stop	Stop	Free	Free	Free	Free
RT Channelized	-	None	-	None	-	None
Storage Length	300	0	-	-	-	500
Veh in Median Storage, #	0	-	-	0	0	-
Grade, %	0	-	-	0	0	-
Peak Hour Factor	96	96	93	93	96	96
Heavy Vehicles, %	2	2	2	2	2	2
Mvmt Flow	273	42	33	209	263	170

Major/Minor	Minor2		Major1		Major2	
Conflicting Flow All	538	263	433	0	-	0
Stage 1	263	-	-	-	-	-
Stage 2	275	-	-	-	-	-
Critical Hdwy	6.42	6.22	4.12	-	-	-
Critical Hdwy Stg 1	5.42	-	-	-	-	-
Critical Hdwy Stg 2	5.42	-	-	-	-	-
Follow-up Hdwy	3.518	3.318	2.218	-	-	-
Pot Cap-1 Maneuver	504	776	1127	-	-	-
Stage 1	781	-	-	-	-	-
Stage 2	771	-	-	-	-	-
Platoon blocked, %				-	-	-
Mov Cap-1 Maneuver	487	776	1127	-	-	-
Mov Cap-2 Maneuver	570	-	-	-	-	-
Stage 1	755	-	-	-	-	-
Stage 2	771	-	-	-	-	-

Approach	EB	NB	SB
HCM Control Delay, s	16.1	1.1	0
HCM LOS	C		

Minor Lane/Major Mvmt	NBL	NBT	EBLn1	EBLn2	SBT	SBR
Capacity (veh/h)	1127	-	570	776	-	-
HCM Lane V/C Ratio	0.03	-	0.479	0.054	-	-
HCM Control Delay (s)	8.3	0	17	9.9	-	-
HCM Lane LOS	A	A	C	A	-	-
HCM 95th %tile Q(veh)	0.1	-	2.6	0.2	-	-

Intersection	
Int Delay, s/veh	2

Movement	EBL	EBT	WBT	WBR	SBL	SBR
Lane Configurations						
Traffic Vol, veh/h	75	285	181	10	6	58
Future Vol, veh/h	75	285	181	10	6	58
Conflicting Peds, #/hr	0	0	0	0	0	0
Sign Control	Free	Free	Free	Free	Stop	Stop
RT Channelized	-	None	-	None	-	None
Storage Length	485	-	-	-	0	-
Veh in Median Storage, #	-	0	0	-	0	-
Grade, %	-	0	0	-	0	-
Peak Hour Factor	96	96	90	90	94	94
Heavy Vehicles, %	2	2	2	2	2	2
Mvmt Flow	78	297	201	11	6	62

Major/Minor	Major1		Major2		Minor2	
Conflicting Flow All	212	0	-	0	660	207
Stage 1	-	-	-	-	207	-
Stage 2	-	-	-	-	453	-
Critical Hdwy	4.12	-	-	-	6.42	6.22
Critical Hdwy Stg 1	-	-	-	-	5.42	-
Critical Hdwy Stg 2	-	-	-	-	5.42	-
Follow-up Hdwy	2.218	-	-	-	3.518	3.318
Pot Cap-1 Maneuver	1358	-	-	-	428	833
Stage 1	-	-	-	-	828	-
Stage 2	-	-	-	-	640	-
Platoon blocked, %		-	-	-		
Mov Cap-1 Maneuver	1358	-	-	-	404	833
Mov Cap-2 Maneuver	-	-	-	-	501	-
Stage 1	-	-	-	-	781	-
Stage 2	-	-	-	-	640	-

Approach	EB	WB	SB
HCM Control Delay, s	1.6	0	10
HCM LOS			B

Minor Lane/Major Mvmt	EBL	EBT	WBT	WBR	SBLn1
Capacity (veh/h)	1358	-	-	-	784
HCM Lane V/C Ratio	0.058	-	-	-	0.087
HCM Control Delay (s)	7.8	-	-	-	10
HCM Lane LOS	A	-	-	-	B
HCM 95th %tile Q(veh)	0.2	-	-	-	0.3

Intersection	
Int Delay, s/veh	2.9

Movement	EBL	EBT	WBT	WBR	SBL	SBR
Lane Configurations						
Traffic Vol, veh/h	111	320	196	33	31	60
Future Vol, veh/h	111	320	196	33	31	60
Conflicting Peds, #/hr	0	0	0	0	0	0
Sign Control	Free	Free	Free	Free	Stop	Stop
RT Channelized	-	None	-	None	-	None
Storage Length	325	-	-	275	250	0
Veh in Median Storage, #	-	0	0	-	0	-
Grade, %	-	0	0	-	0	-
Peak Hour Factor	95	95	91	91	82	82
Heavy Vehicles, %	2	2	2	2	2	2
Mvmt Flow	117	337	215	36	38	73

Major/Minor	Major1		Major2		Minor2	
Conflicting Flow All	251	0	-	0	786	215
Stage 1	-	-	-	-	215	-
Stage 2	-	-	-	-	571	-
Critical Hdwy	4.12	-	-	-	6.42	6.22
Critical Hdwy Stg 1	-	-	-	-	5.42	-
Critical Hdwy Stg 2	-	-	-	-	5.42	-
Follow-up Hdwy	2.218	-	-	-	3.518	3.318
Pot Cap-1 Maneuver	1314	-	-	-	361	825
Stage 1	-	-	-	-	821	-
Stage 2	-	-	-	-	565	-
Platoon blocked, %		-	-	-		
Mov Cap-1 Maneuver	1314	-	-	-	329	825
Mov Cap-2 Maneuver	-	-	-	-	329	-
Stage 1	-	-	-	-	748	-
Stage 2	-	-	-	-	565	-

Approach	EB	WB	SB
HCM Control Delay, s	2.1	0	12.4
HCM LOS			B

Minor Lane/Major Mvmt	EBL	EBT	WBT	WBR	SBLn1	SBLn2
Capacity (veh/h)	1314	-	-	-	329	825
HCM Lane V/C Ratio	0.089	-	-	-	0.115	0.089
HCM Control Delay (s)	8	-	-	-	17.4	9.8
HCM Lane LOS	A	-	-	-	C	A
HCM 95th %tile Q(veh)	0.3	-	-	-	0.4	0.3

Intersection	
Int Delay, s/veh	2.5

Movement	EBL	EBT	WBT	WBR	SBL	SBR
Lane Configurations						
Traffic Vol, veh/h	141	435	244	22	5	89
Future Vol, veh/h	141	435	244	22	5	89
Conflicting Peds, #/hr	0	0	0	0	0	0
Sign Control	Free	Free	Free	Free	Stop	Stop
RT Channelized	-	None	-	None	-	None
Storage Length	300	-	-	250	0	125
Veh in Median Storage, #	-	0	0	-	0	-
Grade, %	-	0	0	-	0	-
Peak Hour Factor	91	91	94	94	79	79
Heavy Vehicles, %	2	2	2	2	2	2
Mvmt Flow	155	478	260	23	6	113

Major/Minor	Major1		Major2		Minor2	
Conflicting Flow All	283	0	-	0	1048	260
Stage 1	-	-	-	-	260	-
Stage 2	-	-	-	-	788	-
Critical Hdwy	4.12	-	-	-	6.42	6.22
Critical Hdwy Stg 1	-	-	-	-	5.42	-
Critical Hdwy Stg 2	-	-	-	-	5.42	-
Follow-up Hdwy	2.218	-	-	-	3.518	3.318
Pot Cap-1 Maneuver	1279	-	-	-	252	779
Stage 1	-	-	-	-	783	-
Stage 2	-	-	-	-	448	-
Platoon blocked, %		-	-	-		
Mov Cap-1 Maneuver	1279	-	-	-	222	779
Mov Cap-2 Maneuver	-	-	-	-	222	-
Stage 1	-	-	-	-	688	-
Stage 2	-	-	-	-	448	-

Approach	EB	WB	SB
HCM Control Delay, s	2	0	11
HCM LOS			B

Minor Lane/Major Mvmt	EBL	EBT	WBT	WBR	SBLn1	SBLn2
Capacity (veh/h)	1279	-	-	-	222	779
HCM Lane V/C Ratio	0.121	-	-	-	0.029	0.145
HCM Control Delay (s)	8.2	-	-	-	21.7	10.4
HCM Lane LOS	A	-	-	-	C	B
HCM 95th %tile Q(veh)	0.4	-	-	-	0.1	0.5

Lane Group	WBL	WBR	NBT	NBR	SBL	SBT
Lane Group Flow (vph)	296	65	446	444	111	502
v/c Ratio	0.65	0.14	0.22	0.40	0.21	0.24
Control Delay	25.6	5.5	6.6	2.1	8.1	6.8
Queue Delay	0.0	0.0	0.0	0.0	0.0	0.0
Total Delay	25.6	5.5	6.6	2.1	8.1	6.8
Queue Length 50th (ft)	85	0	32	0	15	36
Queue Length 95th (ft)	150	22	67	36	47	75
Internal Link Dist (ft)	1938		1222			1449
Turn Bay Length (ft)	325			150	1000	
Base Capacity (vph)	771	726	2068	1110	537	2068
Starvation Cap Reductn	0	0	0	0	0	0
Spillback Cap Reductn	0	0	0	0	0	0
Storage Cap Reductn	0	0	0	0	0	0
Reduced v/c Ratio	0.38	0.09	0.22	0.40	0.21	0.24

Intersection Summary

Movement	WBL	WBR	NBT	NBR	SBL	SBT
Lane Configurations						
Traffic Volume (veh/h)	284	62	428	426	101	457
Future Volume (veh/h)	284	62	428	426	101	457
Initial Q (Qb), veh	0	0	0	0	0	0
Ped-Bike Adj(A_pbT)	1.00	1.00		1.00	1.00	
Parking Bus, Adj	1.00	1.00	1.00	1.00	1.00	1.00
Work Zone On Approach	No		No			No
Adj Sat Flow, veh/h/ln	1870	1870	1870	1870	1870	1870
Adj Flow Rate, veh/h	296	65	446	444	111	502
Peak Hour Factor	0.96	0.96	0.96	0.96	0.91	0.91
Percent Heavy Veh, %	2	2	2	2	2	2
Cap, veh/h	380	338	2175	970	487	2175
Arrive On Green	0.21	0.21	0.61	0.61	0.61	0.61
Sat Flow, veh/h	1781	1585	3647	1585	625	3647
Grp Volume(v), veh/h	296	65	446	444	111	502
Grp Sat Flow(s),veh/h/ln	1781	1585	1777	1585	625	1777
Q Serve(g_s), s	8.1	1.7	2.9	7.8	4.9	3.3
Cycle Q Clear(g_c), s	8.1	1.7	2.9	7.8	7.8	3.3
Prop In Lane	1.00	1.00		1.00	1.00	
Lane Grp Cap(c), veh/h	380	338	2175	970	487	2175
V/C Ratio(X)	0.78	0.19	0.21	0.46	0.23	0.23
Avail Cap(c_a), veh/h	848	755	2175	970	487	2175
HCM Platoon Ratio	1.00	1.00	1.00	1.00	1.00	1.00
Upstream Filter(I)	1.00	1.00	1.00	1.00	1.00	1.00
Uniform Delay (d), s/veh	19.1	16.6	4.4	5.4	6.2	4.5
Incr Delay (d2), s/veh	3.5	0.3	0.2	1.6	1.1	0.2
Initial Q Delay(d3),s/veh	0.0	0.0	0.0	0.0	0.0	0.0
%ile BackOfQ(50%),veh/ln	3.3	0.6	0.7	2.1	0.6	0.8
Unsig. Movement Delay, s/veh						
LnGrp Delay(d),s/veh	22.6	16.9	4.6	6.9	7.2	4.8
LnGrp LOS	C	B	A	A	A	A
Approach Vol, veh/h	361		890			613
Approach Delay, s/veh	21.6		5.8			5.2
Approach LOS	C		A			A

Timer - Assigned Phs		2				6	8
Phs Duration (G+Y+Rc), s		36.0				36.0	15.5
Change Period (Y+Rc), s		4.5				4.5	4.5
Max Green Setting (Gmax), s		31.5				31.5	24.5
Max Q Clear Time (g_c+I1), s		9.8				9.8	10.1
Green Ext Time (p_c), s		4.8				4.5	1.0

Intersection Summary	
HCM 6th Ctrl Delay	8.7
HCM 6th LOS	A

Appendix C

TRIP GENERATION

PROJECT DETAILS

Project Name:	Corvallis TIS Rev 3	Type of Project:	
Project No:		City:	
Country:		Built-up Area(Sq.ft):	
Analyst Name:	Scott Barnhart	Clients Name:	
Date:	1/2/2021	ZIP/Postal Code:	
State/Province:		No. of Scenarios:	3
Analysis Region:			

SCENARIO SUMMARY

Scenarios	Name	No. of Land Uses	Phases of Development	No. of Years to Project Traffic	User Group	Estimated New Vehicle Trips		
						Entry	Exit	Total
Scenario - 1	AM Peak	15	1	0		996	1152	2148
Scenario - 2	PM Peak	15	1	0		1047	838	1885
Scenario - 3	Weekday	15	1	0		17167	17167	34334

Scenario - 1

Scenario Name: AM Peak

User Group:

Dev. phase: 1

No. of Years to Project Traffic : 0

Analyst Note:

Warning:

VEHICLE TRIPS BEFORE REDUCTION

Land Use & Data Source	Location	IV	Size	Time Period	Method Rate/Equation	Entry Split%	Exit Split%	Total
210 - Single-Family Detached Housing	General	Dwelling Units	135	Weekday, Peak Hour of	Best Fit (LIN)	25	75	100
Data Source: Trip Gen Manual, 10th Ed	Urban/Suburban			Adjacent Street Traffic,	T = 0.71(X) + 4.80	25%	75%	
210(1) - Single-Family Detached Housing	General	Dwelling Units	140	Weekday, Peak Hour of	Best Fit (LIN)	26	78	104
Data Source: Trip Gen Manual, 10th Ed	Urban/Suburban			Adjacent Street Traffic,	T = 0.71(X) + 4.80	25%	75%	
210(2) - Single-Family Detached Housing	General	Dwelling Units	53	Weekday, Peak Hour of	Best Fit (LIN)	11	32	43
Data Source: Trip Gen Manual, 10th Ed	Urban/Suburban			Adjacent Street Traffic,	T = 0.71(X) + 4.80	25%	75%	
210(3) - Single-Family Detached Housing	General	Dwelling Units	120	Weekday, Peak Hour of	Best Fit (LIN)	22	68	90
Data Source: Trip Gen Manual, 10th Ed	Urban/Suburban			Adjacent Street Traffic,	T = 0.71(X) + 4.80	25%	75%	
210(4) - Single-Family Detached Housing	General	Dwelling Units	117	Weekday, Peak Hour	Best Fit (LIN)	22	66	88
Data Source: Trip Gen Manual, 10th Ed	Urban/Suburban			of Adjacent Street	T = 0.71(X) + 4.80	25%	75%	
210(5) - Single-Family Detached Housing	General	Dwelling Units	102	Weekday, Peak Hour of	Best Fit (LIN)	19	58	77
Data Source: Trip Gen Manual, 10th Ed	Urban/Suburban			Adjacent Street Traffic,	T = 0.71(X) + 4.80	25%	75%	
210(6) - Single-Family Detached Housing	General	Dwelling Units	193	Weekday, Peak Hour of	Best Fit (LIN)	35	106	141
Data Source: Trip Gen Manual, 10th Ed	Urban/Suburban			Adjacent Street Traffic,	T = 0.71(X) + 4.80	25%	75%	
210(7) - Single-Family Detached Housing	General	Dwelling Units	0	Weekday, Peak Hour of	Best Fit (LIN)	0	0	0
Data Source: Trip Gen Manual, 10th Ed	Urban/Suburban			Adjacent Street Traffic,	T = 0.71(X) + 4.80	25%	75%	
220 - Multifamily Housing (Low-Rise)	General	Dwelling Units	140	Weekday, Peak Hour of	Best Fit (LOG)	15	51	66
Data Source: Trip Gen Manual, 10th Ed	Urban/Suburban			Adjacent Street Traffic,	Ln(T) =0.95Ln(X) - 0.51	23%	77%	
220(1) - Multifamily Housing (Low-Rise)	General	Dwelling Units	180	Weekday, Peak Hour of	Best Fit (LOG)	19	64	83
Data Source: Trip Gen Manual, 10th Ed	Urban/Suburban			Adjacent Street Traffic,	Ln(T) =0.95Ln(X) - 0.51	23%	77%	
820 - Shopping Center	General	1000 Sq. Ft. GLA	21	Weekday, Peak Hour of	Best Fit (LIN)	101	62	163
Data Source: Trip Gen Manual, 10th Ed	Urban/Suburban			Adjacent Street Traffic,	T = 0.50(X) + 151.78	62%	38%	
820(1) - Shopping Center	General	1000 Sq. Ft. GLA	263	Weekday, Peak Hour of	Best Fit (LIN)	176	108	284
Data Source: Trip Gen Manual, 10th Ed	Urban/Suburban			Adjacent Street Traffic,	T = 0.50(X) + 151.78	62%	38%	
820(2) - Shopping Center	General	1000 Sq. Ft. GLA	55	Weekday, Peak Hour of	Best Fit (LIN)	111	68	179
Data Source: Trip Gen Manual, 10th Ed	Urban/Suburban			Adjacent Street Traffic,	T = 0.50(X) + 151.78	62%	38%	
820(3) - Shopping Center	General	1000 Sq. Ft. GLA	55	Weekday, Peak Hour	Best Fit (LIN)	111	68	179
Data Source: Trip Gen Manual, 10th Ed	Urban/Suburban			of Adjacent Street	T = 0.50(X) + 151.78	62%	38%	
520 - Elementary School	General	1000 Sq. Ft. GFA	79	Weekday, Peak Hour of	Average	303	248	551
Data Source: Trip Gen Manual, 10th Ed	Urban/Suburban			Adjacent Street Traffic,	6.97	55%	45%	

VEHICLE TO PERSON TRIP CONVERSION

BASELINE SITE VEHICLE CHARACTERISTICS:

Land Use	Baseline Site Vehicle Mode Share		Baseline Site Vehicle Occupancy		Baseline Site Vehicle Directional Split	
	Entry (%)	Exit (%)	Entry	Exit	Entry (%)	Exit (%)
210 - Single-Family Detached Housing	100	100	1	1	25	75
210(1) - Single-Family Detached Housing	100	100	1	1	25	75
210(2) - Single-Family Detached Housing	100	100	1	1	25	75
210(3) - Single-Family Detached Housing	100	100	1	1	25	75
210(4) - Single-Family Detached Housing	100	100	1	1	25	75

210(5) - Single-Family Detached Housing	100	100	1	1	25	75
210(6) - Single-Family Detached Housing	100	100	1	1	25	75
210(7) - Single-Family Detached Housing	100	100	1	1	25	75
220 - Multifamily Housing (Low-Rise)	100	100	1	1	23	77
220(1) - Multifamily Housing (Low-Rise)	100	100	1	1	23	77
820 - Shopping Center	100	100	1	1	62	38
820(1) - Shopping Center	100	100	1	1	62	38
820(2) - Shopping Center	100	100	1	1	62	38
820(3) - Shopping Center	100	100	1	1	62	38
520 - Elementary School	100	100	1	1	55	45

ESTIMATED BASELINE SITE PERSON TRIPS:

Land Use	Person Trips by Vehicle		Person Trips by Other Modes		Total Baseline Site Person Trips	
	Entry	Exit	Entry	Exit	Entry	Exit
210 - Single-Family Detached Housing	25	75	0	0	25	75
	100		0		100	
210(1) - Single-Family Detached Housing	26	78	0	0	26	78
	104		0		104	
210(2) - Single-Family Detached Housing	11	32	0	0	11	32
	43		0		43	
210(3) - Single-Family Detached Housing	22	68	0	0	22	68
	90		0		90	
210(4) - Single-Family Detached Housing	22	66	0	0	22	66
	88		0		88	
210(5) - Single-Family Detached Housing	19	58	0	0	19	58
	77		0		77	
210(6) - Single-Family Detached Housing	35	106	0	0	35	106
	141		0		141	
210(7) - Single-Family Detached Housing	0	0	0	0	0	0
	0		0		0	
220 - Multifamily Housing (Low-Rise)	15	51	0	0	15	51
	66		0		66	
220(1) - Multifamily Housing (Low-Rise)	19	64	0	0	19	64
	83		0		83	
820 - Shopping Center	101	62	0	0	101	62
	163		0		163	
820(1) - Shopping Center	176	108	0	0	176	108
	284		0		284	
820(2) - Shopping Center	111	68	0	0	111	68
	179		0		179	
820(3) - Shopping Center	111	68	0	0	111	68
	179		0		179	
520 - Elementary School	303	248	0	0	303	248
	551		0		551	

VEHICLE TRIPS AFTER MULTI-MODAL ADJUSTMENT

MODE SHARE:

Land Use	Personal Passenger Vehicle		Truck		Other Modes	
	Entry (%)	Exit (%)	Entry (%)	Exit (%)	Entry (%)	Exit (%)
210 - Single-Family Detached Housing	100%	100%	0%	0%	0%	0%
210(1) - Single-Family Detached Housing	100%	100%	0%	0%	0%	0%
210(2) - Single-Family Detached Housing	100%	100%	0%	0%	0%	0%
210(3) - Single-Family Detached Housing	100%	100%	0%	0%	0%	0%
210(4) - Single-Family Detached Housing	100%	100%	0%	0%	0%	0%

210(5) - Single-Family Detached Housing	100%	100%	0%	0%	0%	0%
210(6) - Single-Family Detached Housing	100%	100%	0%	0%	0%	0%
210(7) - Single-Family Detached Housing	100%	100%	0%	0%	0%	0%
220 - Multifamily Housing (Low-Rise)	100%	100%	0%	0%	0%	0%
220(1) - Multifamily Housing (Low-Rise)	100%	100%	0%	0%	0%	0%
820 - Shopping Center	100%	100%	0%	0%	0%	0%
820(1) - Shopping Center	100%	100%	0%	0%	0%	0%
820(2) - Shopping Center	100%	100%	0%	0%	0%	0%
820(3) - Shopping Center	100%	100%	0%	0%	0%	0%
520 - Elementary School	100%	100%	0%	0%	0%	0%

OCCUPANCY:

Land Use	Vehicle	
	Entry	Exit
210 - Single-Family Detached Housing	1.00	1.00
210(1) - Single-Family Detached Housing	1.00	1.00
210(2) - Single-Family Detached Housing	1.00	1.00
210(3) - Single-Family Detached Housing	1.00	1.00
210(4) - Single-Family Detached Housing	1.00	1.00
210(5) - Single-Family Detached Housing	1.00	1.00
210(6) - Single-Family Detached Housing	1.00	1.00
210(7) - Single-Family Detached Housing	1.00	1.00
220 - Multifamily Housing (Low-Rise)	1.00	1.00
220(1) - Multifamily Housing (Low-Rise)	1.00	1.00
820 - Shopping Center	1.00	1.00
820(1) - Shopping Center	1.00	1.00
820(2) - Shopping Center	1.00	1.00
820(3) - Shopping Center	1.00	1.00
520 - Elementary School	1.00	1.00

ADJUSTED VEHICLE TRIPS:

Land Use	Entry				Exit			
	Person Trips	Vehicle Mode Share (%)	Vehicle Occupancy	Vehical Trips	Person Trips	Vehicle Mode Share (%)	Vehicle Occupancy	Vehical Trips
210 - Single-Family Detached Housing	25	100%	1.00	25	75	100%	1.00	75
210(1) - Single-Family Detached Housing	26	100%	1.00	26	78	100%	1.00	78
210(2) - Single-Family Detached Housing	11	100%	1.00	11	32	100%	1.00	32
210(3) - Single-Family Detached Housing	22	100%	1.00	22	68	100%	1.00	68
210(4) - Single-Family Detached Housing	22	100%	1.00	22	66	100%	1.00	66
210(5) - Single-Family Detached Housing	19	100%	1.00	19	58	100%	1.00	58
210(6) - Single-Family Detached Housing	35	100%	1.00	35	106	100%	1.00	106
210(7) - Single-Family Detached Housing	0	100%	1.00	0	0	100%	1.00	0
220 - Multifamily Housing (Low-Rise)	15	100%	1.00	15	51	100%	1.00	51
220(1) - Multifamily Housing (Low-Rise)	19	100%	1.00	19	64	100%	1.00	64
820 - Shopping Center	101	100%	1.00	101	62	100%	1.00	62
820(1) - Shopping Center	176	100%	1.00	176	108	100%	1.00	108
820(2) - Shopping Center	111	100%	1.00	111	68	100%	1.00	68
820(3) - Shopping Center	111	100%	1.00	111	68	100%	1.00	68
520 - Elementary School	303	100%	1.00	303	248	100%	1.00	248

INTERNAL VEHICLE TRIP REDUCTION

LAND USE GROUP ASSIGNMENT:

Land Use	Land Use Group
210 - Single-Family Detached Housing	Residential

210(1) - Single-Family Detached Housing	Residential
210(2) - Single-Family Detached Housing	Residential
210(3) - Single-Family Detached Housing	Residential
210(4) - Single-Family Detached Housing	Residential
210(5) - Single-Family Detached Housing	Residential
210(6) - Single-Family Detached Housing	Residential
210(7) - Single-Family Detached Housing	Residential
220 - Multifamily Housing (Low-Rise)	Residential
220(1) - Multifamily Housing (Low-Rise)	Residential
820 - Shopping Center	Retail
820(1) - Shopping Center	Retail
820(2) - Shopping Center	Retail
820(3) - Shopping Center	Retail
520 - Elementary School	Others

BALANCED PERSON TRIPS:

210 - Single-Family Detached Housing								210(1) - Single-Family Detached Housing
Persons Exit	PAF	UIPTC	Unconstrained Demand	==>>> BALANCED ==>>>	Unconstrained Demand	UIPTC	PAF	Persons Entry
75	1	0	0	**0**	0	0	1	26
Persons Entry	PAF	UIPTC	Unconstrained Demand	<<<== BALANCED <<<==	Unconstrained Demand	UIPTC	PAF	Persons Exit
25	1	0	0	**0**	0	0	1	78

210 - Single-Family Detached Housing								210(2) - Single-Family Detached Housing
Persons Exit	PAF	UIPTC	Unconstrained Demand	==>>> BALANCED ==>>>	Unconstrained Demand	UIPTC	PAF	Persons Entry
75	1	0	0	**0**	0	0	1	11
Persons Entry	PAF	UIPTC	Unconstrained Demand	<<<== BALANCED <<<==	Unconstrained Demand	UIPTC	PAF	Persons Exit
25	1	0	0	**0**	0	0	1	32

210 - Single-Family Detached Housing								210(3) - Single-Family Detached Housing
Persons Exit	PAF	UIPTC	Unconstrained Demand	==>>> BALANCED ==>>>	Unconstrained Demand	UIPTC	PAF	Persons Entry
75	1	0	0	**0**	0	0	1	23
Persons Entry	PAF	UIPTC	Unconstrained Demand	<<<== BALANCED <<<==	Unconstrained Demand	UIPTC	PAF	Persons Exit
25	1	0	0	**0**	0	0	1	68

210 - Single-Family Detached Housing								210(4) - Single-Family Detached Housing
Persons Exit	PAF	UIPTC	Unconstrained Demand	==>>> BALANCED ==>>>	Unconstrained Demand	UIPTC	PAF	Persons Entry
75	1	0	0	**0**	0	0	1	22
Persons Entry	PAF	UIPTC	Unconstrained Demand	<<<== BALANCED <<<==	Unconstrained Demand	UIPTC	PAF	Persons Exit
25	1	0	0	**0**	0	0	1	66

210 - Single-Family Detached Housing								210(5) - Single-Family Detached Housing
Persons Exit	PAF	UIPTC	Unconstrained Demand	==>>> BALANCED ==>>>	Unconstrained Demand	UIPTC	PAF	Persons Entry
75	1	0	0	**0**	0	0	1	19
Persons Entry	PAF	UIPTC	Unconstrained Demand	<<<== BALANCED <<<==	Unconstrained Demand	UIPTC	PAF	Persons Exit
25	1	0	0	**0**	0	0	1	58

210 - Single-Family Detached Housing								210(6) - Single-Family Detached Housing
Persons Exit	PAF	UIPTC	Unconstrained Demand	==>>> BALANCED ==>>>	Unconstrained Demand	UIPTC	PAF	Persons Entry
75	1	0	0	**0**	0	0	1	35
Persons Entry	PAF	UIPTC	Unconstrained Demand	<<<== BALANCED <<<==	Unconstrained Demand	UIPTC	PAF	Persons Exit
25	1	0	0	**0**	0	0	1	106

210 - Single-Family Detached Housing	210(7) - Single-Family Detached Housing

Persons Exit	PAF	UIPTC	Unconstrained Demand	==>>> BALANCED ==>>>	Unconstrained Demand	UIPTC	PAF	Persons Entry
75	1	0	0	**0**	0	0	1	0
Persons Entry	PAF	UIPTC	Unconstrained Demand	<<<== BALANCED <<<==	Unconstrained Demand	UIPTC	PAF	Persons Exit
25	1	0	0	**0**	0	0	1	0
210 - Single-Family Detached Housing								220 - Multifamily Housing (Low-Rise)
Persons Exit	PAF	UIPTC	Unconstrained Demand	==>>> BALANCED ==>>>	Unconstrained Demand	UIPTC	PAF	Persons Entry
75	1	0	0	**0**	0	0	1	15
Persons Entry	PAF	UIPTC	Unconstrained Demand	<<<== BALANCED <<<==	Unconstrained Demand	UIPTC	PAF	Persons Exit
25	1	0	0	**0**	0	0	1	51
210 - Single-Family Detached Housing								220(1) - Multifamily Housing (Low-Rise)
Persons Exit	PAF	UIPTC	Unconstrained Demand	==>>> BALANCED ==>>>	Unconstrained Demand	UIPTC	PAF	Persons Entry
75	1	0	0	**0**	0	0	1	19
Persons Entry	PAF	UIPTC	Unconstrained Demand	<<<== BALANCED <<<==	Unconstrained Demand	UIPTC	PAF	Persons Exit
25	1	0	0	**0**	0	0	1	64
210 - Single-Family Detached Housing								820 - Shopping Center
Persons Exit	PAF	UIPTC	Unconstrained Demand	==>>> BALANCED ==>>>	Unconstrained Demand	UIPTC	PAF	Persons Entry
75	1	0.3	0	**0**	0	0.425	1	101
Persons Entry	PAF	UIPTC	Unconstrained Demand	<<<== BALANCED <<<==	Unconstrained Demand	UIPTC	PAF	Persons Exit
25	1	0.05	0	**0**	0	0.35	1	62
210 - Single-Family Detached Housing								820(1) - Shopping Center
Persons Exit	PAF	UIPTC	Unconstrained Demand	==>>> BALANCED ==>>>	Unconstrained Demand	UIPTC	PAF	Persons Entry
75	1	0.3	0	**0**	1	0.425	1	176
Persons Entry	PAF	UIPTC	Unconstrained Demand	<<<== BALANCED <<<==	Unconstrained Demand	UIPTC	PAF	Persons Exit
25	1	0.05	0	**0**	0	0.35	1	108
210 - Single-Family Detached Housing								820(2) - Shopping Center
Persons Exit	PAF	UIPTC	Unconstrained Demand	==>>> BALANCED ==>>>	Unconstrained Demand	UIPTC	PAF	Persons Entry
75	1	0.3	0	**0**	0	0.425	1	111
Persons Entry	PAF	UIPTC	Unconstrained Demand	<<<== BALANCED <<<==	Unconstrained Demand	UIPTC	PAF	Persons Exit
25	1	0.05	0	**0**	0	0.35	1	68
210 - Single-Family Detached Housing								820(3) - Shopping Center
Persons Exit	PAF	UIPTC	Unconstrained Demand	==>>> BALANCED ==>>>	Unconstrained Demand	UIPTC	PAF	Persons Entry
75	1	0.3	0	**0**	0	0.425	1	111
Persons Entry	PAF	UIPTC	Unconstrained Demand	<<<== BALANCED <<<==	Unconstrained Demand	UIPTC	PAF	Persons Exit
25	1	0.05	0	**0**	0	0.35	1	68
210 - Single-Family Detached Housing								520 - Elementary School
Persons Exit	PAF	UIPTC	Unconstrained Demand	==>>> BALANCED ==>>>	Unconstrained Demand	UIPTC	PAF	Persons Entry
75	1	0	0	**0**	0	0	1	303
Persons Entry	PAF	UIPTC	Unconstrained Demand	<<<== BALANCED <<<==	Unconstrained Demand	UIPTC	PAF	Persons Exit
25	1	0	0	**0**	0	0	1	248
210(1) - Single-Family Detached Housing								210(2) - Single-Family Detached Housing
Persons Exit	PAF	UIPTC	Unconstrained Demand	==>>> BALANCED ==>>>	Unconstrained Demand	UIPTC	PAF	Persons Entry
78	1	0	0	**0**	0	0	1	11
Persons Entry	PAF	UIPTC	Unconstrained Demand	<<<== BALANCED <<<==	Unconstrained Demand	UIPTC	PAF	Persons Exit
26	1	0	0	**0**	0	0	1	32
210(1) - Single-Family Detached Housing								210(3) - Single-Family Detached Housing
Persons Exit	PAF	UIPTC	Unconstrained Demand	==>>> BALANCED ==>>>	Unconstrained Demand	UIPTC	PAF	Persons Entry
78	1	0	0	**0**	0	0	1	23

Persons Entry	PAF	UIPTC	Unconstrained Demand	**<<<== BALANCED <<<==**	Unconstrained Demand	UIPTC	PAF	Persons Exit
26	1	0	0	**0**	0	0	1	68
210(1) - Single-Family Detached Housing								210(4) - Single-Family Detached Housing
Persons Exit	PAF	UIPTC	Unconstrained Demand	**==>>> BALANCED ==>>>**	Unconstrained Demand	UIPTC	PAF	Persons Entry
78	1	0	0	**0**	0	0	1	22
Persons Entry	PAF	UIPTC	Unconstrained Demand	**<<<== BALANCED <<<==**	Unconstrained Demand	UIPTC	PAF	Persons Exit
26	1	0	0	**0**	0	0	1	66
210(1) - Single-Family Detached Housing								210(5) - Single-Family Detached Housing
Persons Exit	PAF	UIPTC	Unconstrained Demand	**==>>> BALANCED ==>>>**	Unconstrained Demand	UIPTC	PAF	Persons Entry
78	1	0	0	**0**	0	0	1	19
Persons Entry	PAF	UIPTC	Unconstrained Demand	**<<<== BALANCED <<<==**	Unconstrained Demand	UIPTC	PAF	Persons Exit
26	1	0	0	**0**	0	0	1	58
210(1) - Single-Family Detached Housing								210(6) - Single-Family Detached Housing
Persons Exit	PAF	UIPTC	Unconstrained Demand	**==>>> BALANCED ==>>>**	Unconstrained Demand	UIPTC	PAF	Persons Entry
78	1	0	0	**0**	0	0	1	35
Persons Entry	PAF	UIPTC	Unconstrained Demand	**<<<== BALANCED <<<==**	Unconstrained Demand	UIPTC	PAF	Persons Exit
26	1	0	0	**0**	0	0	1	106
210(1) - Single-Family Detached Housing								210(7) - Single-Family Detached Housing
Persons Exit	PAF	UIPTC	Unconstrained Demand	**==>>> BALANCED ==>>>**	Unconstrained Demand	UIPTC	PAF	Persons Entry
78	1	0	0	**0**	0	0	1	0
Persons Entry	PAF	UIPTC	Unconstrained Demand	**<<<== BALANCED <<<==**	Unconstrained Demand	UIPTC	PAF	Persons Exit
26	1	0	0	**0**	0	0	1	0
210(1) - Single-Family Detached Housing								220 - Multifamily Housing (Low-Rise)
Persons Exit	PAF	UIPTC	Unconstrained Demand	**==>>> BALANCED ==>>>**	Unconstrained Demand	UIPTC	PAF	Persons Entry
78	1	0	0	**0**	0	0	1	15
Persons Entry	PAF	UIPTC	Unconstrained Demand	**<<<== BALANCED <<<==**	Unconstrained Demand	UIPTC	PAF	Persons Exit
26	1	0	0	**0**	0	0	1	51
210(1) - Single-Family Detached Housing								220(1) - Multifamily Housing (Low-Rise)
Persons Exit	PAF	UIPTC	Unconstrained Demand	**==>>> BALANCED ==>>>**	Unconstrained Demand	UIPTC	PAF	Persons Entry
78	1	0	0	**0**	0	0	1	19
Persons Entry	PAF	UIPTC	Unconstrained Demand	**<<<== BALANCED <<<==**	Unconstrained Demand	UIPTC	PAF	Persons Exit
26	1	0	0	**0**	0	0	1	64
210(1) - Single-Family Detached Housing								820 - Shopping Center
Persons Exit	PAF	UIPTC	Unconstrained Demand	**==>>> BALANCED ==>>>**	Unconstrained Demand	UIPTC	PAF	Persons Entry
78	1	0.3	0	**0**	0	0.425	1	101
Persons Entry	PAF	UIPTC	Unconstrained Demand	**<<<== BALANCED <<<==**	Unconstrained Demand	UIPTC	PAF	Persons Exit
26	1	0.05	0	**0**	0	0.35	1	62
210(1) - Single-Family Detached Housing								820(1) - Shopping Center
Persons Exit	PAF	UIPTC	Unconstrained Demand	**==>>> BALANCED ==>>>**	Unconstrained Demand	UIPTC	PAF	Persons Entry
78	1	0.3	0	**0**	1	0.425	1	176
Persons Entry	PAF	UIPTC	Unconstrained Demand	**<<<== BALANCED <<<==**	Unconstrained Demand	UIPTC	PAF	Persons Exit
26	1	0.05	0	**0**	0	0.35	1	108
210(1) - Single-Family Detached Housing								820(2) - Shopping Center
Persons Exit	PAF	UIPTC	Unconstrained Demand	**==>>> BALANCED ==>>>**	Unconstrained Demand	UIPTC	PAF	Persons Entry
78	1	0.3	0	**0**	0	0.425	1	111
Persons Entry	PAF	UIPTC	Unconstrained Demand	**<<<== BALANCED <<<==**	Unconstrained Demand	UIPTC	PAF	Persons Exit
26	1	0.05	0	**0**	0	0.35	1	68

210(1) - Single-Family Detached Housing								820(3) - Shopping Center
Persons Exit	PAF	UIPTC	Unconstrained Demand	==>>> BALANCED ==>>>	Unconstrained Demand	UIPTC	PAF	Persons Entry
78	1	0.3	0	0	0	0.425	1	111
Persons Entry	PAF	UIPTC	Unconstrained Demand	<<<== BALANCED <<<==	Unconstrained Demand	UIPTC	PAF	Persons Exit
26	1	0.05	0	0	0	0.35	1	68

210(1) - Single-Family Detached Housing								520 - Elementary School
Persons Exit	PAF	UIPTC	Unconstrained Demand	==>>> BALANCED ==>>>	Unconstrained Demand	UIPTC	PAF	Persons Entry
78	1	0	0	0	0	0	1	303
Persons Entry	PAF	UIPTC	Unconstrained Demand	<<<== BALANCED <<<==	Unconstrained Demand	UIPTC	PAF	Persons Exit
26	1	0	0	0	0	0	1	248

210(2) - Single-Family Detached Housing								210(3) - Single-Family Detached Housing
Persons Exit	PAF	UIPTC	Unconstrained Demand	==>>> BALANCED ==>>>	Unconstrained Demand	UIPTC	PAF	Persons Entry
32	1	0	0	0	0	0	1	23
Persons Entry	PAF	UIPTC	Unconstrained Demand	<<<== BALANCED <<<==	Unconstrained Demand	UIPTC	PAF	Persons Exit
11	1	0	0	0	0	0	1	68

210(2) - Single-Family Detached Housing								210(4) - Single-Family Detached Housing
Persons Exit	PAF	UIPTC	Unconstrained Demand	==>>> BALANCED ==>>>	Unconstrained Demand	UIPTC	PAF	Persons Entry
32	1	0	0	0	0	0	1	22
Persons Entry	PAF	UIPTC	Unconstrained Demand	<<<== BALANCED <<<==	Unconstrained Demand	UIPTC	PAF	Persons Exit
11	1	0	0	0	0	0	1	66

210(2) - Single-Family Detached Housing								210(5) - Single-Family Detached Housing
Persons Exit	PAF	UIPTC	Unconstrained Demand	==>>> BALANCED ==>>>	Unconstrained Demand	UIPTC	PAF	Persons Entry
32	1	0	0	0	0	0	1	19
Persons Entry	PAF	UIPTC	Unconstrained Demand	<<<== BALANCED <<<==	Unconstrained Demand	UIPTC	PAF	Persons Exit
11	1	0	0	0	0	0	1	58

210(2) - Single-Family Detached Housing								210(6) - Single-Family Detached Housing
Persons Exit	PAF	UIPTC	Unconstrained Demand	==>>> BALANCED ==>>>	Unconstrained Demand	UIPTC	PAF	Persons Entry
32	1	0	0	0	0	0	1	35
Persons Entry	PAF	UIPTC	Unconstrained Demand	<<<== BALANCED <<<==	Unconstrained Demand	UIPTC	PAF	Persons Exit
11	1	0	0	0	0	0	1	106

210(2) - Single-Family Detached Housing								210(7) - Single-Family Detached Housing
Persons Exit	PAF	UIPTC	Unconstrained Demand	==>>> BALANCED ==>>>	Unconstrained Demand	UIPTC	PAF	Persons Entry
32	1	0	0	0	0	0	1	0
Persons Entry	PAF	UIPTC	Unconstrained Demand	<<<== BALANCED <<<==	Unconstrained Demand	UIPTC	PAF	Persons Exit
11	1	0	0	0	0	0	1	0

210(2) - Single-Family Detached Housing								220 - Multifamily Housing (Low-Rise)
Persons Exit	PAF	UIPTC	Unconstrained Demand	==>>> BALANCED ==>>>	Unconstrained Demand	UIPTC	PAF	Persons Entry
32	1	0	0	0	0	0	1	15
Persons Entry	PAF	UIPTC	Unconstrained Demand	<<<== BALANCED <<<==	Unconstrained Demand	UIPTC	PAF	Persons Exit
11	1	0	0	0	0	0	1	51

210(2) - Single-Family Detached Housing								220(1) - Multifamily Housing (Low-Rise)
Persons Exit	PAF	UIPTC	Unconstrained Demand	==>>> BALANCED ==>>>	Unconstrained Demand	UIPTC	PAF	Persons Entry
32	1	0	0	0	0	0	1	19
Persons Entry	PAF	UIPTC	Unconstrained Demand	<<<== BALANCED <<<==	Unconstrained Demand	UIPTC	PAF	Persons Exit
11	1	0	0	0	0	0	1	64

210(2) - Single-Family Detached Housing								820 - Shopping Center

Persons Exit	PAF	UIPTC	Unconstrained Demand	==>>> BALANCED ==>>>	Unconstrained Demand	UIPTC	PAF	Persons Entry
32	1	0.3	0	0	0	0.425	1	101
Persons Entry	PAF	UIPTC	Unconstrained Demand	<<<== BALANCED <<<==	Unconstrained Demand	UIPTC	PAF	Persons Exit
11	1	0.05	0	0	0	0.35	1	62
210(2) - Single-Family Detached Housing								820(1) - Shopping Center
Persons Exit	PAF	UIPTC	Unconstrained Demand	==>>> BALANCED ==>>>	Unconstrained Demand	UIPTC	PAF	Persons Entry
32	1	0.3	0	0	1	0.425	1	176
Persons Entry	PAF	UIPTC	Unconstrained Demand	<<<== BALANCED <<<==	Unconstrained Demand	UIPTC	PAF	Persons Exit
11	1	0.05	0	0	0	0.35	1	108
210(2) - Single-Family Detached Housing								820(2) - Shopping Center
Persons Exit	PAF	UIPTC	Unconstrained Demand	==>>> BALANCED ==>>>	Unconstrained Demand	UIPTC	PAF	Persons Entry
32	1	0.3	0	0	0	0.425	1	111
Persons Entry	PAF	UIPTC	Unconstrained Demand	<<<== BALANCED <<<==	Unconstrained Demand	UIPTC	PAF	Persons Exit
11	1	0.05	0	0	0	0.35	1	68
210(2) - Single-Family Detached Housing								820(3) - Shopping Center
Persons Exit	PAF	UIPTC	Unconstrained Demand	==>>> BALANCED ==>>>	Unconstrained Demand	UIPTC	PAF	Persons Entry
32	1	0.3	0	0	0	0.425	1	111
Persons Entry	PAF	UIPTC	Unconstrained Demand	<<<== BALANCED <<<==	Unconstrained Demand	UIPTC	PAF	Persons Exit
11	1	0.05	0	0	0	0.35	1	68
210(2) - Single-Family Detached Housing								520 - Elementary School
Persons Exit	PAF	UIPTC	Unconstrained Demand	==>>> BALANCED ==>>>	Unconstrained Demand	UIPTC	PAF	Persons Entry
32	1	0	0	0	0	0	1	303
Persons Entry	PAF	UIPTC	Unconstrained Demand	<<<== BALANCED <<<==	Unconstrained Demand	UIPTC	PAF	Persons Exit
11	1	0	0	0	0	0	1	248
210(3) - Single-Family Detached Housing								210(4) - Single-Family Detached Housing
Persons Exit	PAF	UIPTC	Unconstrained Demand	==>>> BALANCED ==>>>	Unconstrained Demand	UIPTC	PAF	Persons Entry
68	1	0	0	0	0	0	1	22
Persons Entry	PAF	UIPTC	Unconstrained Demand	<<<== BALANCED <<<==	Unconstrained Demand	UIPTC	PAF	Persons Exit
23	1	0	0	0	0	0	1	66
210(3) - Single-Family Detached Housing								210(5) - Single-Family Detached Housing
Persons Exit	PAF	UIPTC	Unconstrained Demand	==>>> BALANCED ==>>>	Unconstrained Demand	UIPTC	PAF	Persons Entry
68	1	0	0	0	0	0	1	19
Persons Entry	PAF	UIPTC	Unconstrained Demand	<<<== BALANCED <<<==	Unconstrained Demand	UIPTC	PAF	Persons Exit
23	1	0	0	0	0	0	1	58
210(3) - Single-Family Detached Housing								210(6) - Single-Family Detached Housing
Persons Exit	PAF	UIPTC	Unconstrained Demand	==>>> BALANCED ==>>>	Unconstrained Demand	UIPTC	PAF	Persons Entry
68	1	0	0	0	0	0	1	35
Persons Entry	PAF	UIPTC	Unconstrained Demand	<<<== BALANCED <<<==	Unconstrained Demand	UIPTC	PAF	Persons Exit
23	1	0	0	0	0	0	1	106
210(3) - Single-Family Detached Housing								210(7) - Single-Family Detached Housing
Persons Exit	PAF	UIPTC	Unconstrained Demand	==>>> BALANCED ==>>>	Unconstrained Demand	UIPTC	PAF	Persons Entry
68	1	0	0	0	0	0	1	0
Persons Entry	PAF	UIPTC	Unconstrained Demand	<<<== BALANCED <<<==	Unconstrained Demand	UIPTC	PAF	Persons Exit
23	1	0	0	0	0	0	1	0
210(3) - Single-Family Detached Housing								220 - Multifamily Housing (Low-Rise)
Persons Exit	PAF	UIPTC	Unconstrained Demand	==>>> BALANCED ==>>>	Unconstrained Demand	UIPTC	PAF	Persons Entry
68	1	0	0	0	0	0	1	15

Persons Entry	PAF	UIPTC	Unconstrained Demand	**<<<== BALANCED <<<==**	Unconstrained Demand	UIPTC	PAF	Persons Exit
23	1	0	0	**0**	0	0	1	51
210(3) - Single-Family Detached Housing								220(1) - Multifamily Housing (Low-Rise)
Persons Exit	PAF	UIPTC	Unconstrained Demand	**==>>> BALANCED ==>>>**	Unconstrained Demand	UIPTC	PAF	Persons Entry
68	1	0	0	**0**	0	0	1	19
Persons Entry	PAF	UIPTC	Unconstrained Demand	**<<<== BALANCED <<<==**	Unconstrained Demand	UIPTC	PAF	Persons Exit
23	1	0	0	**0**	0	0	1	64
210(3) - Single-Family Detached Housing								820 - Shopping Center
Persons Exit	PAF	UIPTC	Unconstrained Demand	**==>>> BALANCED ==>>>**	Unconstrained Demand	UIPTC	PAF	Persons Entry
68	1	0.3	0	**0**	0	0.425	1	101
Persons Entry	PAF	UIPTC	Unconstrained Demand	**<<<== BALANCED <<<==**	Unconstrained Demand	UIPTC	PAF	Persons Exit
23	1	0.05	0	**0**	0	0.35	1	62
210(3) - Single-Family Detached Housing								820(1) - Shopping Center
Persons Exit	PAF	UIPTC	Unconstrained Demand	**==>>> BALANCED ==>>>**	Unconstrained Demand	UIPTC	PAF	Persons Entry
68	1	0.3	0	**0**	1	0.425	1	176
Persons Entry	PAF	UIPTC	Unconstrained Demand	**<<<== BALANCED <<<==**	Unconstrained Demand	UIPTC	PAF	Persons Exit
23	1	0.05	0	**0**	0	0.35	1	108
210(3) - Single-Family Detached Housing								820(2) - Shopping Center
Persons Exit	PAF	UIPTC	Unconstrained Demand	**==>>> BALANCED ==>>>**	Unconstrained Demand	UIPTC	PAF	Persons Entry
68	1	0.3	0	**0**	0	0.425	1	111
Persons Entry	PAF	UIPTC	Unconstrained Demand	**<<<== BALANCED <<<==**	Unconstrained Demand	UIPTC	PAF	Persons Exit
23	1	0.05	0	**0**	0	0.35	1	68
210(3) - Single-Family Detached Housing								820(3) - Shopping Center
Persons Exit	PAF	UIPTC	Unconstrained Demand	**==>>> BALANCED ==>>>**	Unconstrained Demand	UIPTC	PAF	Persons Entry
68	1	0.3	0	**0**	0	0.425	1	111
Persons Entry	PAF	UIPTC	Unconstrained Demand	**<<<== BALANCED <<<==**	Unconstrained Demand	UIPTC	PAF	Persons Exit
23	1	0.05	0	**0**	0	0.35	1	68
210(3) - Single-Family Detached Housing								520 - Elementary School
Persons Exit	PAF	UIPTC	Unconstrained Demand	**==>>> BALANCED ==>>>**	Unconstrained Demand	UIPTC	PAF	Persons Entry
68	1	0	0	**0**	0	0	1	303
Persons Entry	PAF	UIPTC	Unconstrained Demand	**<<<== BALANCED <<<==**	Unconstrained Demand	UIPTC	PAF	Persons Exit
23	1	0	0	**0**	0	0	1	248
210(4) - Single-Family Detached Housing								210(5) - Single-Family Detached Housing
Persons Exit	PAF	UIPTC	Unconstrained Demand	**==>>> BALANCED ==>>>**	Unconstrained Demand	UIPTC	PAF	Persons Entry
66	1	0	0	**0**	0	0	1	19
Persons Entry	PAF	UIPTC	Unconstrained Demand	**<<<== BALANCED <<<==**	Unconstrained Demand	UIPTC	PAF	Persons Exit
22	1	0	0	**0**	0	0	1	58
210(4) - Single-Family Detached Housing								210(6) - Single-Family Detached Housing
Persons Exit	PAF	UIPTC	Unconstrained Demand	**==>>> BALANCED ==>>>**	Unconstrained Demand	UIPTC	PAF	Persons Entry
66	1	0	0	**0**	0	0	1	35
Persons Entry	PAF	UIPTC	Unconstrained Demand	**<<<== BALANCED <<<==**	Unconstrained Demand	UIPTC	PAF	Persons Exit
22	1	0	0	**0**	0	0	1	106
210(4) - Single-Family Detached Housing								210(7) - Single-Family Detached Housing
Persons Exit	PAF	UIPTC	Unconstrained Demand	**==>>> BALANCED ==>>>**	Unconstrained Demand	UIPTC	PAF	Persons Entry
66	1	0	0	**0**	0	0	1	0
Persons Entry	PAF	UIPTC	Unconstrained Demand	**<<<== BALANCED <<<==**	Unconstrained Demand	UIPTC	PAF	Persons Exit
22	1	0	0	**0**	0	0	1	0

210(4) - Single-Family Detached Housing								220 - Multifamily Housing (Low-Rise)
Persons Exit	PAF	UIPTC	Unconstrained Demand	==>>> BALANCED ==>>>	Unconstrained Demand	UIPTC	PAF	Persons Entry
66	1	0	0	**0**	0	0	1	15
Persons Entry	PAF	UIPTC	Unconstrained Demand	<<<== BALANCED <<<==	Unconstrained Demand	UIPTC	PAF	Persons Exit
22	1	0	0	**0**	0	0	1	51

210(4) - Single-Family Detached Housing								220(1) - Multifamily Housing (Low-Rise)
Persons Exit	PAF	UIPTC	Unconstrained Demand	==>>> BALANCED ==>>>	Unconstrained Demand	UIPTC	PAF	Persons Entry
66	1	0	0	**0**	0	0	1	19
Persons Entry	PAF	UIPTC	Unconstrained Demand	<<<== BALANCED <<<==	Unconstrained Demand	UIPTC	PAF	Persons Exit
22	1	0	0	**0**	0	0	1	64

210(4) - Single-Family Detached Housing								820 - Shopping Center
Persons Exit	PAF	UIPTC	Unconstrained Demand	==>>> BALANCED ==>>>	Unconstrained Demand	UIPTC	PAF	Persons Entry
66	1	0.3	0	**0**	0	0.425	1	101
Persons Entry	PAF	UIPTC	Unconstrained Demand	<<<== BALANCED <<<==	Unconstrained Demand	UIPTC	PAF	Persons Exit
22	1	0.05	0	**0**	0	0.35	1	62

210(4) - Single-Family Detached Housing								820(1) - Shopping Center
Persons Exit	PAF	UIPTC	Unconstrained Demand	==>>> BALANCED ==>>>	Unconstrained Demand	UIPTC	PAF	Persons Entry
66	1	0.3	0	**0**	1	0.425	1	176
Persons Entry	PAF	UIPTC	Unconstrained Demand	<<<== BALANCED <<<==	Unconstrained Demand	UIPTC	PAF	Persons Exit
22	1	0.05	0	**0**	0	0.35	1	108

210(4) - Single-Family Detached Housing								820(2) - Shopping Center
Persons Exit	PAF	UIPTC	Unconstrained Demand	==>>> BALANCED ==>>>	Unconstrained Demand	UIPTC	PAF	Persons Entry
66	1	0.3	0	**0**	0	0.425	1	111
Persons Entry	PAF	UIPTC	Unconstrained Demand	<<<== BALANCED <<<==	Unconstrained Demand	UIPTC	PAF	Persons Exit
22	1	0.05	0	**0**	0	0.35	1	68

210(4) - Single-Family Detached Housing								820(3) - Shopping Center
Persons Exit	PAF	UIPTC	Unconstrained Demand	==>>> BALANCED ==>>>	Unconstrained Demand	UIPTC	PAF	Persons Entry
66	1	0.3	0	**0**	0	0.425	1	111
Persons Entry	PAF	UIPTC	Unconstrained Demand	<<<== BALANCED <<<==	Unconstrained Demand	UIPTC	PAF	Persons Exit
22	1	0.05	0	**0**	0	0.35	1	68

210(4) - Single-Family Detached Housing								520 - Elementary School
Persons Exit	PAF	UIPTC	Unconstrained Demand	==>>> BALANCED ==>>>	Unconstrained Demand	UIPTC	PAF	Persons Entry
66	1	0	0	**0**	0	0	1	303
Persons Entry	PAF	UIPTC	Unconstrained Demand	<<<== BALANCED <<<==	Unconstrained Demand	UIPTC	PAF	Persons Exit
22	1	0	0	**0**	0	0	1	248

210(5) - Single-Family Detached Housing								210(6) - Single-Family Detached Housing
Persons Exit	PAF	UIPTC	Unconstrained Demand	==>>> BALANCED ==>>>	Unconstrained Demand	UIPTC	PAF	Persons Entry
58	1	0	0	**0**	0	0	1	35
Persons Entry	PAF	UIPTC	Unconstrained Demand	<<<== BALANCED <<<==	Unconstrained Demand	UIPTC	PAF	Persons Exit
19	1	0	0	**0**	0	0	1	106

210(5) - Single-Family Detached Housing								210(7) - Single-Family Detached Housing
Persons Exit	PAF	UIPTC	Unconstrained Demand	==>>> BALANCED ==>>>	Unconstrained Demand	UIPTC	PAF	Persons Entry
58	1	0	0	**0**	0	0	1	0
Persons Entry	PAF	UIPTC	Unconstrained Demand	<<<== BALANCED <<<==	Unconstrained Demand	UIPTC	PAF	Persons Exit
19	1	0	0	**0**	0	0	1	0

210(5) - Single-Family Detached Housing								220 - Multifamily Housing (Low-Rise)

Persons Exit	PAF	UIPTC	Unconstrained Demand	==>>> BALANCED ==>>>	Unconstrained Demand	UIPTC	PAF	Persons Entry
58	1	0	0	**0**	0	0	1	15
Persons Entry	PAF	UIPTC	Unconstrained Demand	<<<== BALANCED <<<==	Unconstrained Demand	UIPTC	PAF	Persons Exit
19	1	0	0	**0**	0	0	1	51
210(5) - Single-Family Detached Housing								220(1) - Multifamily Housing (Low-Rise)
Persons Exit	PAF	UIPTC	Unconstrained Demand	==>>> BALANCED ==>>>	Unconstrained Demand	UIPTC	PAF	Persons Entry
58	1	0	0	**0**	0	0	1	19
Persons Entry	PAF	UIPTC	Unconstrained Demand	<<<== BALANCED <<<==	Unconstrained Demand	UIPTC	PAF	Persons Exit
19	1	0	0	**0**	0	0	1	64
210(5) - Single-Family Detached Housing								820 - Shopping Center
Persons Exit	PAF	UIPTC	Unconstrained Demand	==>>> BALANCED ==>>>	Unconstrained Demand	UIPTC	PAF	Persons Entry
58	1	0.3	0	**0**	0	0.425	1	101
Persons Entry	PAF	UIPTC	Unconstrained Demand	<<<== BALANCED <<<==	Unconstrained Demand	UIPTC	PAF	Persons Exit
19	1	0.05	0	**0**	0	0.35	1	62
210(5) - Single-Family Detached Housing								820(1) - Shopping Center
Persons Exit	PAF	UIPTC	Unconstrained Demand	==>>> BALANCED ==>>>	Unconstrained Demand	UIPTC	PAF	Persons Entry
58	1	0.3	0	**0**	1	0.425	1	176
Persons Entry	PAF	UIPTC	Unconstrained Demand	<<<== BALANCED <<<==	Unconstrained Demand	UIPTC	PAF	Persons Exit
19	1	0.05	0	**0**	0	0.35	1	108
210(5) - Single-Family Detached Housing								820(2) - Shopping Center
Persons Exit	PAF	UIPTC	Unconstrained Demand	==>>> BALANCED ==>>>	Unconstrained Demand	UIPTC	PAF	Persons Entry
58	1	0.3	0	**0**	0	0.425	1	111
Persons Entry	PAF	UIPTC	Unconstrained Demand	<<<== BALANCED <<<==	Unconstrained Demand	UIPTC	PAF	Persons Exit
19	1	0.05	0	**0**	0	0.35	1	68
210(5) - Single-Family Detached Housing								820(3) - Shopping Center
Persons Exit	PAF	UIPTC	Unconstrained Demand	==>>> BALANCED ==>>>	Unconstrained Demand	UIPTC	PAF	Persons Entry
58	1	0.3	0	**0**	0	0.425	1	111
Persons Entry	PAF	UIPTC	Unconstrained Demand	<<<== BALANCED <<<==	Unconstrained Demand	UIPTC	PAF	Persons Exit
19	1	0.05	0	**0**	0	0.35	1	68
210(5) - Single-Family Detached Housing								520 - Elementary School
Persons Exit	PAF	UIPTC	Unconstrained Demand	==>>> BALANCED ==>>>	Unconstrained Demand	UIPTC	PAF	Persons Entry
58	1	0	0	**0**	0	0	1	303
Persons Entry	PAF	UIPTC	Unconstrained Demand	<<<== BALANCED <<<==	Unconstrained Demand	UIPTC	PAF	Persons Exit
19	1	0	0	**0**	0	0	1	248
210(6) - Single-Family Detached Housing								210(7) - Single-Family Detached Housing
Persons Exit	PAF	UIPTC	Unconstrained Demand	==>>> BALANCED ==>>>	Unconstrained Demand	UIPTC	PAF	Persons Entry
106	1	0	0	**0**	0	0	1	0
Persons Entry	PAF	UIPTC	Unconstrained Demand	<<<== BALANCED <<<==	Unconstrained Demand	UIPTC	PAF	Persons Exit
35	1	0	0	**0**	0	0	1	0
210(6) - Single-Family Detached Housing								220 - Multifamily Housing (Low-Rise)
Persons Exit	PAF	UIPTC	Unconstrained Demand	==>>> BALANCED ==>>>	Unconstrained Demand	UIPTC	PAF	Persons Entry
106	1	0	0	**0**	0	0	1	15
Persons Entry	PAF	UIPTC	Unconstrained Demand	<<<== BALANCED <<<==	Unconstrained Demand	UIPTC	PAF	Persons Exit
35	1	0	0	**0**	0	0	1	51
210(6) - Single-Family Detached Housing								220(1) - Multifamily Housing (Low-Rise)
Persons Exit	PAF	UIPTC	Unconstrained Demand	==>>> BALANCED ==>>>	Unconstrained Demand	UIPTC	PAF	Persons Entry
106	1	0	0	**0**	0	0	1	19

Persons Entry	PAF	UIPTC	Unconstrained Demand	**<<<== BALANCED <<<==**	Unconstrained Demand	UIPTC	PAF	Persons Exit
35	1	0	0	**0**	0	0	1	64
210(6) - Single-Family Detached Housing								820 - Shopping Center
Persons Exit	PAF	UIPTC	Unconstrained Demand	**==>>> BALANCED ==>>>**	Unconstrained Demand	UIPTC	PAF	Persons Entry
106	1	0.3	0	**0**	0	0.425	1	101
Persons Entry	PAF	UIPTC	Unconstrained Demand	**<<<== BALANCED <<<==**	Unconstrained Demand	UIPTC	PAF	Persons Exit
35	1	0.05	0	**0**	0	0.35	1	62
210(6) - Single-Family Detached Housing								820(1) - Shopping Center
Persons Exit	PAF	UIPTC	Unconstrained Demand	**==>>> BALANCED ==>>>**	Unconstrained Demand	UIPTC	PAF	Persons Entry
106	1	0.3	0	**0**	1	0.425	1	176
Persons Entry	PAF	UIPTC	Unconstrained Demand	**<<<== BALANCED <<<==**	Unconstrained Demand	UIPTC	PAF	Persons Exit
35	1	0.05	0	**0**	0	0.35	1	108
210(6) - Single-Family Detached Housing								820(2) - Shopping Center
Persons Exit	PAF	UIPTC	Unconstrained Demand	**==>>> BALANCED ==>>>**	Unconstrained Demand	UIPTC	PAF	Persons Entry
106	1	0.3	0	**0**	0	0.425	1	111
Persons Entry	PAF	UIPTC	Unconstrained Demand	**<<<== BALANCED <<<==**	Unconstrained Demand	UIPTC	PAF	Persons Exit
35	1	0.05	0	**0**	0	0.35	1	68
210(6) - Single-Family Detached Housing								820(3) - Shopping Center
Persons Exit	PAF	UIPTC	Unconstrained Demand	**==>>> BALANCED ==>>>**	Unconstrained Demand	UIPTC	PAF	Persons Entry
106	1	0.3	0	**0**	0	0.425	1	111
Persons Entry	PAF	UIPTC	Unconstrained Demand	**<<<== BALANCED <<<==**	Unconstrained Demand	UIPTC	PAF	Persons Exit
35	1	0.05	0	**0**	0	0.35	1	68
210(6) - Single-Family Detached Housing								520 - Elementary School
Persons Exit	PAF	UIPTC	Unconstrained Demand	**==>>> BALANCED ==>>>**	Unconstrained Demand	UIPTC	PAF	Persons Entry
106	1	0	0	**0**	0	0	1	303
Persons Entry	PAF	UIPTC	Unconstrained Demand	**<<<== BALANCED <<<==**	Unconstrained Demand	UIPTC	PAF	Persons Exit
35	1	0	0	**0**	0	0	1	248
210(7) - Single-Family Detached Housing								220 - Multifamily Housing (Low-Rise)
Persons Exit	PAF	UIPTC	Unconstrained Demand	**==>>> BALANCED ==>>>**	Unconstrained Demand	UIPTC	PAF	Persons Entry
0	1	0	0	**0**	0	0	1	15
Persons Entry	PAF	UIPTC	Unconstrained Demand	**<<<== BALANCED <<<==**	Unconstrained Demand	UIPTC	PAF	Persons Exit
0	1	0	0	**0**	0	0	1	51
210(7) - Single-Family Detached Housing								220(1) - Multifamily Housing (Low-Rise)
Persons Exit	PAF	UIPTC	Unconstrained Demand	**==>>> BALANCED ==>>>**	Unconstrained Demand	UIPTC	PAF	Persons Entry
0	1	0	0	**0**	0	0	1	19
Persons Entry	PAF	UIPTC	Unconstrained Demand	**<<<== BALANCED <<<==**	Unconstrained Demand	UIPTC	PAF	Persons Exit
0	1	0	0	**0**	0	0	1	64
210(7) - Single-Family Detached Housing								820 - Shopping Center
Persons Exit	PAF	UIPTC	Unconstrained Demand	**==>>> BALANCED ==>>>**	Unconstrained Demand	UIPTC	PAF	Persons Entry
0	1	0.3	0	**0**	0	0.425	1	101
Persons Entry	PAF	UIPTC	Unconstrained Demand	**<<<== BALANCED <<<==**	Unconstrained Demand	UIPTC	PAF	Persons Exit
0	1	0.05	0	**0**	0	0.35	1	62
210(7) - Single-Family Detached Housing								820(1) - Shopping Center
Persons Exit	PAF	UIPTC	Unconstrained Demand	**==>>> BALANCED ==>>>**	Unconstrained Demand	UIPTC	PAF	Persons Entry
0	1	0.3	0	**0**	1	0.425	1	176
Persons Entry	PAF	UIPTC	Unconstrained Demand	**<<<== BALANCED <<<==**	Unconstrained Demand	UIPTC	PAF	Persons Exit
0	1	0.05	0	**0**	0	0.35	1	108

210(7) - Single-Family Detached Housing								820(2) - Shopping Center
Persons Exit	PAF	UIPTC	Unconstrained Demand	==>>> BALANCED ==>>>	Unconstrained Demand	UIPTC	PAF	Persons Entry
0	1	0.3	0	0	0	0.425	1	111
Persons Entry	PAF	UIPTC	Unconstrained Demand	<<<== BALANCED <<<==	Unconstrained Demand	UIPTC	PAF	Persons Exit
0	1	0.05	0	0	0	0.35	1	68

210(7) - Single-Family Detached Housing								820(3) - Shopping Center
Persons Exit	PAF	UIPTC	Unconstrained Demand	==>>> BALANCED ==>>>	Unconstrained Demand	UIPTC	PAF	Persons Entry
0	1	0.3	0	0	0	0.425	1	111
Persons Entry	PAF	UIPTC	Unconstrained Demand	<<<== BALANCED <<<==	Unconstrained Demand	UIPTC	PAF	Persons Exit
0	1	0.05	0	0	0	0.35	1	68

210(7) - Single-Family Detached Housing								520 - Elementary School
Persons Exit	PAF	UIPTC	Unconstrained Demand	==>>> BALANCED ==>>>	Unconstrained Demand	UIPTC	PAF	Persons Entry
0	1	0	0	0	0	0	1	303
Persons Entry	PAF	UIPTC	Unconstrained Demand	<<<== BALANCED <<<==	Unconstrained Demand	UIPTC	PAF	Persons Exit
0	1	0	0	0	0	0	1	248

220 - Multifamily Housing (Low-Rise)								220(1) - Multifamily Housing (Low-Rise)
Persons Exit	PAF	UIPTC	Unconstrained Demand	==>>> BALANCED ==>>>	Unconstrained Demand	UIPTC	PAF	Persons Entry
51	1	0	0	0	0	0	1	19
Persons Entry	PAF	UIPTC	Unconstrained Demand	<<<== BALANCED <<<==	Unconstrained Demand	UIPTC	PAF	Persons Exit
15	1	0	0	0	0	0	1	64

220 - Multifamily Housing (Low-Rise)								820 - Shopping Center
Persons Exit	PAF	UIPTC	Unconstrained Demand	==>>> BALANCED ==>>>	Unconstrained Demand	UIPTC	PAF	Persons Entry
51	1	0.3	0	0	0	0.425	1	101
Persons Entry	PAF	UIPTC	Unconstrained Demand	<<<== BALANCED <<<==	Unconstrained Demand	UIPTC	PAF	Persons Exit
15	1	0.05	0	0	0	0.35	1	62

220 - Multifamily Housing (Low-Rise)								820(1) - Shopping Center
Persons Exit	PAF	UIPTC	Unconstrained Demand	==>>> BALANCED ==>>>	Unconstrained Demand	UIPTC	PAF	Persons Entry
51	1	0.3	0	0	1	0.425	1	176
Persons Entry	PAF	UIPTC	Unconstrained Demand	<<<== BALANCED <<<==	Unconstrained Demand	UIPTC	PAF	Persons Exit
15	1	0.05	0	0	0	0.35	1	108

220 - Multifamily Housing (Low-Rise)								820(2) - Shopping Center
Persons Exit	PAF	UIPTC	Unconstrained Demand	==>>> BALANCED ==>>>	Unconstrained Demand	UIPTC	PAF	Persons Entry
51	1	0.3	0	0	0	0.425	1	111
Persons Entry	PAF	UIPTC	Unconstrained Demand	<<<== BALANCED <<<==	Unconstrained Demand	UIPTC	PAF	Persons Exit
15	1	0.05	0	0	0	0.35	1	68

220 - Multifamily Housing (Low-Rise)								820(3) - Shopping Center
Persons Exit	PAF	UIPTC	Unconstrained Demand	==>>> BALANCED ==>>>	Unconstrained Demand	UIPTC	PAF	Persons Entry
51	1	0.3	0	0	0	0.425	1	111
Persons Entry	PAF	UIPTC	Unconstrained Demand	<<<== BALANCED <<<==	Unconstrained Demand	UIPTC	PAF	Persons Exit
15	1	0.05	0	0	0	0.35	1	68

220 - Multifamily Housing (Low-Rise)								520 - Elementary School
Persons Exit	PAF	UIPTC	Unconstrained Demand	==>>> BALANCED ==>>>	Unconstrained Demand	UIPTC	PAF	Persons Entry
51	1	0	0	0	0	0	1	303
Persons Entry	PAF	UIPTC	Unconstrained Demand	<<<== BALANCED <<<==	Unconstrained Demand	UIPTC	PAF	Persons Exit
15	1	0	0	0	0	0	1	248

220(1) - Multifamily Housing (Low-Rise)	820 - Shopping Center

Persons Exit	PAF	UIPTC	Unconstrained Demand	==>>> BALANCED ==>>>	Unconstrained Demand	UIPTC	PAF	Persons Entry
64	1	0.3	0	0	0	0.425	1	101
Persons Entry	PAF	UIPTC	Unconstrained Demand	<<<== BALANCED <<<==	Unconstrained Demand	UIPTC	PAF	Persons Exit
19	1	0.05	0	0	0	0.35	1	62
220(1) - Multifamily Housing (Low-Rise)								820(1) - Shopping Center
Persons Exit	PAF	UIPTC	Unconstrained Demand	==>>> BALANCED ==>>>	Unconstrained Demand	UIPTC	PAF	Persons Entry
64	1	0.3	0	0	1	0.425	1	176
Persons Entry	PAF	UIPTC	Unconstrained Demand	<<<== BALANCED <<<==	Unconstrained Demand	UIPTC	PAF	Persons Exit
19	1	0.05	0	0	0	0.35	1	108
220(1) - Multifamily Housing (Low-Rise)								820(2) - Shopping Center
Persons Exit	PAF	UIPTC	Unconstrained Demand	==>>> BALANCED ==>>>	Unconstrained Demand	UIPTC	PAF	Persons Entry
64	1	0.3	0	0	0	0.425	1	111
Persons Entry	PAF	UIPTC	Unconstrained Demand	<<<== BALANCED <<<==	Unconstrained Demand	UIPTC	PAF	Persons Exit
19	1	0.05	0	0	0	0.35	1	68
220(1) - Multifamily Housing (Low-Rise)								820(3) - Shopping Center
Persons Exit	PAF	UIPTC	Unconstrained Demand	==>>> BALANCED ==>>>	Unconstrained Demand	UIPTC	PAF	Persons Entry
64	1	0.3	0	0	0	0.425	1	111
Persons Entry	PAF	UIPTC	Unconstrained Demand	<<<== BALANCED <<<==	Unconstrained Demand	UIPTC	PAF	Persons Exit
19	1	0.05	0	0	0	0.35	1	68
220(1) - Multifamily Housing (Low-Rise)								520 - Elementary School
Persons Exit	PAF	UIPTC	Unconstrained Demand	==>>> BALANCED ==>>>	Unconstrained Demand	UIPTC	PAF	Persons Entry
64	1	0	0	0	0	0	1	303
Persons Entry	PAF	UIPTC	Unconstrained Demand	<<<== BALANCED <<<==	Unconstrained Demand	UIPTC	PAF	Persons Exit
19	1	0	0	0	0	0	1	248
820 - Shopping Center								820(1) - Shopping Center
Persons Exit	PAF	UIPTC	Unconstrained Demand	==>>> BALANCED ==>>>	Unconstrained Demand	UIPTC	PAF	Persons Entry
62	1	0	0	0	0	0	1	176
Persons Entry	PAF	UIPTC	Unconstrained Demand	<<<== BALANCED <<<==	Unconstrained Demand	UIPTC	PAF	Persons Exit
101	1	0	0	0	0	0	1	108
820 - Shopping Center								820(2) - Shopping Center
Persons Exit	PAF	UIPTC	Unconstrained Demand	==>>> BALANCED ==>>>	Unconstrained Demand	UIPTC	PAF	Persons Entry
62	1	0	0	0	0	0	1	111
Persons Entry	PAF	UIPTC	Unconstrained Demand	<<<== BALANCED <<<==	Unconstrained Demand	UIPTC	PAF	Persons Exit
101	1	0	0	0	0	0	1	68
820 - Shopping Center								820(3) - Shopping Center
Persons Exit	PAF	UIPTC	Unconstrained Demand	==>>> BALANCED ==>>>	Unconstrained Demand	UIPTC	PAF	Persons Entry
62	1	0	0	0	0	0	1	111
Persons Entry	PAF	UIPTC	Unconstrained Demand	<<<== BALANCED <<<==	Unconstrained Demand	UIPTC	PAF	Persons Exit
101	1	0	0	0	0	0	1	68
820 - Shopping Center								520 - Elementary School
Persons Exit	PAF	UIPTC	Unconstrained Demand	==>>> BALANCED ==>>>	Unconstrained Demand	UIPTC	PAF	Persons Entry
62	1	0	0	0	0	0	1	303
Persons Entry	PAF	UIPTC	Unconstrained Demand	<<<== BALANCED <<<==	Unconstrained Demand	UIPTC	PAF	Persons Exit
101	1	0	0	0	0	0	1	248
820(1) - Shopping Center								820(2) - Shopping Center
Persons Exit	PAF	UIPTC	Unconstrained Demand	==>>> BALANCED ==>>>	Unconstrained Demand	UIPTC	PAF	Persons Entry
108	1	0	0	0	0	0	1	111

Persons Entry	PAF	UIPTC	Unconstrained Demand	<<<== BALANCED <<<==	Unconstrained Demand	UIPTC	PAF	Persons Exit
176	1	0	0	**0**	0	0	1	68

820(1) - Shopping Center								820(3) - Shopping Center
Persons Exit	PAF	UIPTC	Unconstrained Demand	==>>> BALANCED ==>>>	Unconstrained Demand	UIPTC	PAF	Persons Entry
108	1	0	0	**0**	0	0	1	111
Persons Entry	PAF	UIPTC	Unconstrained Demand	<<<== BALANCED <<<==	Unconstrained Demand	UIPTC	PAF	Persons Exit
176	1	0	0	**0**	0	0	1	68

820(1) - Shopping Center								520 - Elementary School
Persons Exit	PAF	UIPTC	Unconstrained Demand	==>>> BALANCED ==>>>	Unconstrained Demand	UIPTC	PAF	Persons Entry
108	1	0	0	**0**	0	0	1	303
Persons Entry	PAF	UIPTC	Unconstrained Demand	<<<== BALANCED <<<==	Unconstrained Demand	UIPTC	PAF	Persons Exit
176	1	0	0	**0**	0	0	1	248

820(2) - Shopping Center								820(3) - Shopping Center
Persons Exit	PAF	UIPTC	Unconstrained Demand	==>>> BALANCED ==>>>	Unconstrained Demand	UIPTC	PAF	Persons Entry
68	1	0	0	**0**	0	0	1	111
Persons Entry	PAF	UIPTC	Unconstrained Demand	<<<== BALANCED <<<==	Unconstrained Demand	UIPTC	PAF	Persons Exit
111	1	0	0	**0**	0	0	1	68

820(2) - Shopping Center								520 - Elementary School
Persons Exit	PAF	UIPTC	Unconstrained Demand	==>>> BALANCED ==>>>	Unconstrained Demand	UIPTC	PAF	Persons Entry
68	1	0	0	**0**	0	0	1	303
Persons Entry	PAF	UIPTC	Unconstrained Demand	<<<== BALANCED <<<==	Unconstrained Demand	UIPTC	PAF	Persons Exit
111	1	0	0	**0**	0	0	1	248

820(3) - Shopping Center								520 - Elementary School
Persons Exit	PAF	UIPTC	Unconstrained Demand	==>>> BALANCED ==>>>	Unconstrained Demand	UIPTC	PAF	Persons Entry
68	1	0	0	**0**	0	0	1	303
Persons Entry	PAF	UIPTC	Unconstrained Demand	<<<== BALANCED <<<==	Unconstrained Demand	UIPTC	PAF	Persons Exit
111	1	0	0	**0**	0	0	1	248

INTERNAL PERSON TRIPS:

210 - Single-Family Detached Housing

Internal Person Trips From	Entry	Exit	Total
210(1) - Single-Family Detached Housing	0	0	0
210(2) - Single-Family Detached Housing	0	0	0
210(3) - Single-Family Detached Housing	0	0	0
210(4) - Single-Family Detached Housing	0	0	0
210(5) - Single-Family Detached Housing	0	0	0
210(6) - Single-Family Detached Housing	0	0	0
210(7) - Single-Family Detached Housing	0	0	0
220 - Multifamily Housing (Low-Rise)	0	0	0
220(1) - Multifamily Housing (Low-Rise)	0	0	0
820 - Shopping Center	0	0	0
820(1) - Shopping Center	0	0	0
820(2) - Shopping Center	0	0	0
820(3) - Shopping Center	0	0	0
520 - Elementary School	0	0	0
Total Internal Person Trips	**0**	**0**	**0**

210(1) - Single-Family Detached Housing

Internal Person Trips From	Entry	Exit	Total
210 - Single-Family Detached Housing	0	0	0

210(2) - Single-Family Detached Housing	0	0	0
210(3) - Single-Family Detached Housing	0	0	0
210(4) - Single-Family Detached Housing	0	0	0
210(5) - Single-Family Detached Housing	0	0	0
210(6) - Single-Family Detached Housing	0	0	0
210(7) - Single-Family Detached Housing	0	0	0
220 - Multifamily Housing (Low-Rise)	0	0	0
220(1) - Multifamily Housing (Low-Rise)	0	0	0
820 - Shopping Center	0	0	0
820(1) - Shopping Center	0	0	0
820(2) - Shopping Center	0	0	0
820(3) - Shopping Center	0	0	0
520 - Elementary School	0	0	0
Total Internal Person Trips	**0**	**0**	**0**

210(2) - Single-Family Detached Housing

Internal Person Trips From	Entry	Exit	Total
210 - Single-Family Detached Housing	0	0	0
210(1) - Single-Family Detached Housing	0	0	0
210(3) - Single-Family Detached Housing	0	0	0
210(4) - Single-Family Detached Housing	0	0	0
210(5) - Single-Family Detached Housing	0	0	0
210(6) - Single-Family Detached Housing	0	0	0
210(7) - Single-Family Detached Housing	0	0	0
220 - Multifamily Housing (Low-Rise)	0	0	0
220(1) - Multifamily Housing (Low-Rise)	0	0	0
820 - Shopping Center	0	0	0
820(1) - Shopping Center	0	0	0
820(2) - Shopping Center	0	0	0
820(3) - Shopping Center	0	0	0
520 - Elementary School	0	0	0
Total Internal Person Trips	**0**	**0**	**0**

210(3) - Single-Family Detached Housing

Internal Person Trips From	Entry	Exit	Total
210 - Single-Family Detached Housing	0	0	0
210(1) - Single-Family Detached Housing	0	0	0
210(2) - Single-Family Detached Housing	0	0	0
210(4) - Single-Family Detached Housing	0	0	0
210(5) - Single-Family Detached Housing	0	0	0
210(6) - Single-Family Detached Housing	0	0	0
210(7) - Single-Family Detached Housing	0	0	0
220 - Multifamily Housing (Low-Rise)	0	0	0
220(1) - Multifamily Housing (Low-Rise)	0	0	0
820 - Shopping Center	0	0	0
820(1) - Shopping Center	0	0	0
820(2) - Shopping Center	0	0	0
820(3) - Shopping Center	0	0	0
520 - Elementary School	0	0	0
Total Internal Person Trips	**0**	**0**	**0**

210(4) - Single-Family Detached Housing

Internal Person Trips From	Entry	Exit	Total
210 - Single-Family Detached Housing	0	0	0
210(1) - Single-Family Detached Housing	0	0	0
210(2) - Single-Family Detached Housing	0	0	0

210(3) - Single-Family Detached Housing	0	0	0
210(5) - Single-Family Detached Housing	0	0	0
210(6) - Single-Family Detached Housing	0	0	0
210(7) - Single-Family Detached Housing	0	0	0
220 - Multifamily Housing (Low-Rise)	0	0	0
220(1) - Multifamily Housing (Low-Rise)	0	0	0
820 - Shopping Center	0	0	0
820(1) - Shopping Center	0	0	0
820(2) - Shopping Center	0	0	0
820(3) - Shopping Center	0	0	0
520 - Elementary School	0	0	0
Total Internal Person Trips	**0**	**0**	**0**

210(5) - Single-Family Detached Housing

Internal Person Trips From	Entry	Exit	Total
210 - Single-Family Detached Housing	0	0	0
210(1) - Single-Family Detached Housing	0	0	0
210(2) - Single-Family Detached Housing	0	0	0
210(3) - Single-Family Detached Housing	0	0	0
210(4) - Single-Family Detached Housing	0	0	0
210(6) - Single-Family Detached Housing	0	0	0
210(7) - Single-Family Detached Housing	0	0	0
220 - Multifamily Housing (Low-Rise)	0	0	0
220(1) - Multifamily Housing (Low-Rise)	0	0	0
820 - Shopping Center	0	0	0
820(1) - Shopping Center	0	0	0
820(2) - Shopping Center	0	0	0
820(3) - Shopping Center	0	0	0
520 - Elementary School	0	0	0
Total Internal Person Trips	**0**	**0**	**0**

210(6) - Single-Family Detached Housing

Internal Person Trips From	Entry	Exit	Total
210 - Single-Family Detached Housing	0	0	0
210(1) - Single-Family Detached Housing	0	0	0
210(2) - Single-Family Detached Housing	0	0	0
210(3) - Single-Family Detached Housing	0	0	0
210(4) - Single-Family Detached Housing	0	0	0
210(5) - Single-Family Detached Housing	0	0	0
210(7) - Single-Family Detached Housing	0	0	0
220 - Multifamily Housing (Low-Rise)	0	0	0
220(1) - Multifamily Housing (Low-Rise)	0	0	0
820 - Shopping Center	0	0	0
820(1) - Shopping Center	0	0	0
820(2) - Shopping Center	0	0	0
820(3) - Shopping Center	0	0	0
520 - Elementary School	0	0	0
Total Internal Person Trips	**0**	**0**	**0**

210(7) - Single-Family Detached Housing

Internal Person Trips From	Entry	Exit	Total
210 - Single-Family Detached Housing	0	0	0
210(1) - Single-Family Detached Housing	0	0	0
210(2) - Single-Family Detached Housing	0	0	0
210(3) - Single-Family Detached Housing	0	0	0
210(4) - Single-Family Detached Housing	0	0	0

210(5) - Single-Family Detached Housing	0	0	0
210(6) - Single-Family Detached Housing	0	0	0
220 - Multifamily Housing (Low-Rise)	0	0	0
220(1) - Multifamily Housing (Low-Rise)	0	0	0
820 - Shopping Center	0	0	0
820(1) - Shopping Center	0	0	0
820(2) - Shopping Center	0	0	0
820(3) - Shopping Center	0	0	0
520 - Elementary School	0	0	0
Total Internal Person Trips	**0**	**0**	**0**

220 - Multifamily Housing (Low-Rise)

Internal Person Trips From	Entry	Exit	Total
210 - Single-Family Detached Housing	0	0	0
210(1) - Single-Family Detached Housing	0	0	0
210(2) - Single-Family Detached Housing	0	0	0
210(3) - Single-Family Detached Housing	0	0	0
210(4) - Single-Family Detached Housing	0	0	0
210(5) - Single-Family Detached Housing	0	0	0
210(6) - Single-Family Detached Housing	0	0	0
210(7) - Single-Family Detached Housing	0	0	0
220(1) - Multifamily Housing (Low-Rise)	0	0	0
820 - Shopping Center	0	0	0
820(1) - Shopping Center	0	0	0
820(2) - Shopping Center	0	0	0
820(3) - Shopping Center	0	0	0
520 - Elementary School	0	0	0
Total Internal Person Trips	**0**	**0**	**0**

220(1) - Multifamily Housing (Low-Rise)

Internal Person Trips From	Entry	Exit	Total
210 - Single-Family Detached Housing	0	0	0
210(1) - Single-Family Detached Housing	0	0	0
210(2) - Single-Family Detached Housing	0	0	0
210(3) - Single-Family Detached Housing	0	0	0
210(4) - Single-Family Detached Housing	0	0	0
210(5) - Single-Family Detached Housing	0	0	0
210(6) - Single-Family Detached Housing	0	0	0
210(7) - Single-Family Detached Housing	0	0	0
220 - Multifamily Housing (Low-Rise)	0	0	0
820 - Shopping Center	0	0	0
820(1) - Shopping Center	0	0	0
820(2) - Shopping Center	0	0	0
820(3) - Shopping Center	0	0	0
520 - Elementary School	0	0	0
Total Internal Person Trips	**0**	**0**	**0**

820 - Shopping Center

Internal Person Trips From	Entry	Exit	Total
210 - Single-Family Detached Housing	0	0	0
210(1) - Single-Family Detached Housing	0	0	0
210(2) - Single-Family Detached Housing	0	0	0
210(3) - Single-Family Detached Housing	0	0	0
210(4) - Single-Family Detached Housing	0	0	0
210(5) - Single-Family Detached Housing	0	0	0
210(6) - Single-Family Detached Housing	0	0	0

210(7) - Single-Family Detached Housing	0	0	0
220 - Multifamily Housing (Low-Rise)	0	0	0
220(1) - Multifamily Housing (Low-Rise)	0	0	0
820(1) - Shopping Center	0	0	0
820(2) - Shopping Center	0	0	0
820(3) - Shopping Center	0	0	0
520 - Elementary School	0	0	0
Total Internal Person Trips	**0**	**0**	**0**

820(1) - Shopping Center

Internal Person Trips From	Entry	Exit	Total
210 - Single-Family Detached Housing	0	0	0
210(1) - Single-Family Detached Housing	0	0	0
210(2) - Single-Family Detached Housing	0	0	0
210(3) - Single-Family Detached Housing	0	0	0
210(4) - Single-Family Detached Housing	0	0	0
210(5) - Single-Family Detached Housing	0	0	0
210(6) - Single-Family Detached Housing	0	0	0
210(7) - Single-Family Detached Housing	0	0	0
220 - Multifamily Housing (Low-Rise)	0	0	0
220(1) - Multifamily Housing (Low-Rise)	0	0	0
820 - Shopping Center	0	0	0
820(2) - Shopping Center	0	0	0
820(3) - Shopping Center	0	0	0
520 - Elementary School	0	0	0
Total Internal Person Trips	**0**	**0**	**0**

820(2) - Shopping Center

Internal Person Trips From	Entry	Exit	Total
210 - Single-Family Detached Housing	0	0	0
210(1) - Single-Family Detached Housing	0	0	0
210(2) - Single-Family Detached Housing	0	0	0
210(3) - Single-Family Detached Housing	0	0	0
210(4) - Single-Family Detached Housing	0	0	0
210(5) - Single-Family Detached Housing	0	0	0
210(6) - Single-Family Detached Housing	0	0	0
210(7) - Single-Family Detached Housing	0	0	0
220 - Multifamily Housing (Low-Rise)	0	0	0
220(1) - Multifamily Housing (Low-Rise)	0	0	0
820 - Shopping Center	0	0	0
820(1) - Shopping Center	0	0	0
820(3) - Shopping Center	0	0	0
520 - Elementary School	0	0	0
Total Internal Person Trips	**0**	**0**	**0**

820(3) - Shopping Center

Internal Person Trips From	Entry	Exit	Total
210 - Single-Family Detached Housing	0	0	0
210(1) - Single-Family Detached Housing	0	0	0
210(2) - Single-Family Detached Housing	0	0	0
210(3) - Single-Family Detached Housing	0	0	0
210(4) - Single-Family Detached Housing	0	0	0
210(5) - Single-Family Detached Housing	0	0	0
210(6) - Single-Family Detached Housing	0	0	0
210(7) - Single-Family Detached Housing	0	0	0
220 - Multifamily Housing (Low-Rise)	0	0	0

220(1) - Multifamily Housing (Low-Rise)	0	0	0
820 - Shopping Center	0	0	0
820(1) - Shopping Center	0	0	0
820(2) - Shopping Center	0	0	0
520 - Elementary School	0	0	0
Total Internal Person Trips	**0**	**0**	**0**

520 - Elementary School

Internal Person Trips From	Entry	Exit	Total
210 - Single-Family Detached Housing	0	0	0
210(1) - Single-Family Detached Housing	0	0	0
210(2) - Single-Family Detached Housing	0	0	0
210(3) - Single-Family Detached Housing	0	0	0
210(4) - Single-Family Detached Housing	0	0	0
210(5) - Single-Family Detached Housing	0	0	0
210(6) - Single-Family Detached Housing	0	0	0
210(7) - Single-Family Detached Housing	0	0	0
220 - Multifamily Housing (Low-Rise)	0	0	0
220(1) - Multifamily Housing (Low-Rise)	0	0	0
820 - Shopping Center	0	0	0
820(1) - Shopping Center	0	0	0
820(2) - Shopping Center	0	0	0
820(3) - Shopping Center	0	0	0
Total Internal Person Trips	**0**	**0**	**0**

INTERNAL VEHICLE TRIPS AND CAPTURE:
210 - Single-Family Detached Housing

Total Internal Person Trips	0	0	0
Vehicle Mode Share	100%	100%	-
Vehicle Occupancy	1.00	1.00	-
Total Vehicle Internal Trips	**0**	**0**	**0**
Total External Vehicle Trips	25	75	100
Internal Vehicle Trip Capture	**0%**	**0%**	**0%**

210(1) - Single-Family Detached Housing

Total Internal Person Trips	0	0	0
Vehicle Mode Share	100%	100%	-
Vehicle Occupancy	1.00	1.00	-
Total Vehicle Internal Trips	**0**	**0**	**0**
Total External Vehicle Trips	26	78	104
Internal Vehicle Trip Capture	**0%**	**0%**	**0%**

210(2) - Single-Family Detached Housing

Total Internal Person Trips	0	0	0
Vehicle Mode Share	100%	100%	-
Vehicle Occupancy	1.00	1.00	-
Total Vehicle Internal Trips	**0**	**0**	**0**
Total External Vehicle Trips	11	32	43
Internal Vehicle Trip Capture	**0%**	**0%**	**0%**

210(3) - Single-Family Detached Housing

Total Internal Person Trips	0	0	0

Vehicle Mode Share	100%	100%	-
Vehicle Occupancy	1.00	1.00	-
Total Vehicle Internal Trips	**0**	**0**	**0**
Total External Vehicle Trips	22	68	90
Internal Vehicle Trip Capture	**0%**	**0%**	**0%**

210(4) - Single-Family Detached Housing

Total Internal Person Trips	0	0	0
Vehicle Mode Share	100%	100%	-
Vehicle Occupancy	1.00	1.00	-
Total Vehicle Internal Trips	**0**	**0**	**0**
Total External Vehicle Trips	22	66	88
Internal Vehicle Trip Capture	**0%**	**0%**	**0%**

210(5) - Single-Family Detached Housing

Total Internal Person Trips	0	0	0
Vehicle Mode Share	100%	100%	-
Vehicle Occupancy	1.00	1.00	-
Total Vehicle Internal Trips	**0**	**0**	**0**
Total External Vehicle Trips	19	58	77
Internal Vehicle Trip Capture	**0%**	**0%**	**0%**

210(6) - Single-Family Detached Housing

Total Internal Person Trips	0	0	0
Vehicle Mode Share	100%	100%	-
Vehicle Occupancy	1.00	1.00	-
Total Vehicle Internal Trips	**0**	**0**	**0**
Total External Vehicle Trips	35	106	141
Internal Vehicle Trip Capture	**0%**	**0%**	**0%**

210(7) - Single-Family Detached Housing

Total Internal Person Trips	0	0	0
Vehicle Mode Share	100%	100%	-
Vehicle Occupancy	1.00	1.00	-
Total Vehicle Internal Trips	**0**	**0**	**0**
Total External Vehicle Trips	0	0	0
Internal Vehicle Trip Capture	**0%**	**0%**	**0%**

220 - Multifamily Housing (Low-Rise)

Total Internal Person Trips	0	0	0
Vehicle Mode Share	100%	100%	-
Vehicle Occupancy	1.00	1.00	-
Total Vehicle Internal Trips	**0**	**0**	**0**
Total External Vehicle Trips	15	51	66
Internal Vehicle Trip Capture	**0%**	**0%**	**0%**

220(1) - Multifamily Housing (Low-Rise)

Total Internal Person Trips	0	0	0
Vehicle Mode Share	100%	100%	-
Vehicle Occupancy	1.00	1.00	-

Total Vehicle Internal Trips	**0**	**0**	**0**
Total External Vehicle Trips	19	64	83
Internal Vehicle Trip Capture	**0%**	**0%**	**0%**

820 - Shopping Center

Total Internal Person Trips	0	0	0
Vehicle Mode Share	100%	100%	-
Vehicle Occupancy	1.00	1.00	-
Total Vehicle Internal Trips	**0**	**0**	**0**
Total External Vehicle Trips	101	62	163
Internal Vehicle Trip Capture	**0%**	**0%**	**0%**

820(1) - Shopping Center

Total Internal Person Trips	0	0	0
Vehicle Mode Share	100%	100%	-
Vehicle Occupancy	1.00	1.00	-
Total Vehicle Internal Trips	**0**	**0**	**0**
Total External Vehicle Trips	176	108	284
Internal Vehicle Trip Capture	**0%**	**0%**	**0%**

820(2) - Shopping Center

Total Internal Person Trips	0	0	0
Vehicle Mode Share	100%	100%	-
Vehicle Occupancy	1.00	1.00	-
Total Vehicle Internal Trips	**0**	**0**	**0**
Total External Vehicle Trips	111	68	179
Internal Vehicle Trip Capture	**0%**	**0%**	**0%**

820(3) - Shopping Center

Total Internal Person Trips	0	0	0
Vehicle Mode Share	100%	100%	-
Vehicle Occupancy	1.00	1.00	-
Total Vehicle Internal Trips	**0**	**0**	**0**
Total External Vehicle Trips	111	68	179
Internal Vehicle Trip Capture	**0%**	**0%**	**0%**

520 - Elementary School

Total Internal Person Trips	0	0	0
Vehicle Mode Share	100%	100%	-
Vehicle Occupancy	1.00	1.00	-
Total Vehicle Internal Trips	**0**	**0**	**0**
Total External Vehicle Trips	303	248	551
Internal Vehicle Trip Capture	**0%**	**0%**	**0%**

PASS-BY VEHICLE TRIP REDUCTION

Land Use	External Vehicle Trips		Pass-by Vehicle Trip %		Pass-by Vehicle Trips	
	Entry	Exit	Entry (%)	Exit (%)	Entry	Exit
210 - Single-Family Detached Housing	25	75	0.00%	0.00%	0	0
210(1) - Single-Family Detached Housing	26	78	0.00%	0.00%	0	0

210(2) - Single-Family Detached Housing	11	32	0.00%	0.00%	0	0
210(3) - Single-Family Detached Housing	22	68	0.00%	0.00%	0	0
210(4) - Single-Family Detached Housing	22	66	0.00%	0.00%	0	0
210(5) - Single-Family Detached Housing	19	58	0.00%	0.00%	0	0
210(6) - Single-Family Detached Housing	35	106	0.00%	0.00%	0	0
210(7) - Single-Family Detached Housing	0	0	0.00%	0.00%	0	0
220 - Multifamily Housing (Low-Rise)	15	51	0.00%	0.00%	0	0
220(1) - Multifamily Housing (Low-Rise)	19	64	0.00%	0.00%	0	0
820 - Shopping Center	101	62	0.00%	0.00%	0	0
820(1) - Shopping Center	176	108	0.00%	0.00%	0	0
820(2) - Shopping Center	111	68	0.00%	0.00%	0	0
820(3) - Shopping Center	111	68	0.00%	0.00%	0	0
520 - Elementary School	303	248	0.00%	0.00%	0	0

DIVERTED VEHICLE TRIP REDUCTION

Land Use	External Vehicle Trips		Diverted Vehicle Trip %		Diverted Vehicle Trips	
	Entry	Exit	Entry (%)	Exit (%)	Entry	Exit
210 - Single-Family Detached Housing	25	75	0.00%	0.00%	0	0
210(1) - Single-Family Detached Housing	26	78	0.00%	0.00%	0	0
210(2) - Single-Family Detached Housing	11	32	0.00%	0.00%	0	0
210(3) - Single-Family Detached Housing	22	68	0.00%	0.00%	0	0
210(4) - Single-Family Detached Housing	22	66	0.00%	0.00%	0	0
210(5) - Single-Family Detached Housing	19	58	0.00%	0.00%	0	0
210(6) - Single-Family Detached Housing	35	106	0.00%	0.00%	0	0
210(7) - Single-Family Detached Housing	0	0	0.00%	0.00%	0	0
220 - Multifamily Housing (Low-Rise)	15	51	0.00%	0.00%	0	0
220(1) - Multifamily Housing (Low-Rise)	19	64	0.00%	0.00%	0	0
820 - Shopping Center	101	62	0.00%	0.00%	0	0
820(1) - Shopping Center	176	108	0.00%	0.00%	0	0
820(2) - Shopping Center	111	68	0.00%	0.00%	0	0
820(3) - Shopping Center	111	68	0.00%	0.00%	0	0
520 - Elementary School	303	248	0.00%	0.00%	0	0

EXTRA VEHICLE TRIP REDUCTION

Land Use	(External - (Pass-by + Diverted)) Vehicle Trips		Extra Vehicle Trip Reduction %		Extra Reduced Vehicle Trips	
	Entry	Exit	Entry (%)	Exit (%)	Entry	Exit
210 - Single-Family Detached Housing	25	75	0.00%	0.00%	0	0
210(1) - Single-Family Detached Housing	26	78	0.00%	0.00%	0	0
210(2) - Single-Family Detached Housing	11	32	0.00%	0.00%	0	0
210(3) - Single-Family Detached Housing	22	68	0.00%	0.00%	0	0
210(4) - Single-Family Detached Housing	22	66	0.00%	0.00%	0	0
210(5) - Single-Family Detached Housing	19	58	0.00%	0.00%	0	0
210(6) - Single-Family Detached Housing	35	106	0.00%	0.00%	0	0
210(7) - Single-Family Detached Housing	0	0	0.00%	0.00%	0	0
220 - Multifamily Housing (Low-Rise)	15	51	0.00%	0.00%	0	0
220(1) - Multifamily Housing (Low-Rise)	19	64	0.00%	0.00%	0	0
820 - Shopping Center	101	62	0.00%	0.00%	0	0
820(1) - Shopping Center	176	108	0.00%	0.00%	0	0
820(2) - Shopping Center	111	68	0.00%	0.00%	0	0
820(3) - Shopping Center	111	68	0.00%	0.00%	0	0
520 - Elementary School	303	248	0.00%	0.00%	0	0

NEW VEHICLE TRIPS

Land Use	New Vehicle Trips		
	Entry	Exit	Total
210 - Single-Family Detached Housing	25	75	100
210(1) - Single-Family Detached Housing	26	78	104
210(2) - Single-Family Detached Housing	11	32	43
210(3) - Single-Family Detached Housing	22	68	90
210(4) - Single-Family Detached Housing	22	66	88
210(5) - Single-Family Detached Housing	19	58	77
210(6) - Single-Family Detached Housing	35	106	141
210(7) - Single-Family Detached Housing	0	0	0
220 - Multifamily Housing (Low-Rise)	15	51	66
220(1) - Multifamily Housing (Low-Rise)	19	64	83
820 - Shopping Center	101	62	163
820(1) - Shopping Center	176	108	284
820(2) - Shopping Center	111	68	179
820(3) - Shopping Center	111	68	179
520 - Elementary School	303	248	551

Land Use	New Vehicle Trips (PPV)		
	Entry	Exit	Total
210 - Single-Family Detached Housing	25	75	100
210(1) - Single-Family Detached Housing	26	78	104
210(2) - Single-Family Detached Housing	11	32	43
210(3) - Single-Family Detached Housing	22	68	90
210(4) - Single-Family Detached Housing	22	66	88
210(5) - Single-Family Detached Housing	19	58	77
210(6) - Single-Family Detached Housing	35	106	141
210(7) - Single-Family Detached Housing	0	0	0
220 - Multifamily Housing (Low-Rise)	15	51	66
220(1) - Multifamily Housing (Low-Rise)	19	64	83
820 - Shopping Center	101	62	163
820(1) - Shopping Center	176	108	284
820(2) - Shopping Center	111	68	179
820(3) - Shopping Center	111	68	179
520 - Elementary School	303	248	551

Land Use	New Vehicle Trips (Truck)		
	Entry	Exit	Total
210 - Single-Family Detached Housing	0	0	0
210(1) - Single-Family Detached Housing	0	0	0
210(2) - Single-Family Detached Housing	0	0	0
210(3) - Single-Family Detached Housing	0	0	0
210(4) - Single-Family Detached Housing	0	0	0
210(5) - Single-Family Detached Housing	0	0	0
210(6) - Single-Family Detached Housing	0	0	0
210(7) - Single-Family Detached Housing	0	0	0
220 - Multifamily Housing (Low-Rise)	0	0	0
220(1) - Multifamily Housing (Low-Rise)	0	0	0
820 - Shopping Center	0	0	0
820(1) - Shopping Center	0	0	0
820(2) - Shopping Center	0	0	0
820(3) - Shopping Center	0	0	0
520 - Elementary School	0	0	0

RESULTS

Site Totals	Entry	Exit	Total
Vehicle Trips Before Reduction	997	1152	2149
Vehicle Trips After Multi-modal Adjustment	996	1152	2148
Internal Vehicle Trips	0	0	0
External Vehicle Trips	996	1152	2148
Internal Vehicle Trip Capture	0%	0%	0%
Pass-by Vehicle Trips	0	0	0
Diverted Vehicle Trips	0	0	0
Extra Reduced Vehicle Trips	0	0	0
New Vehicle Trips	996	1152	2148
PPV	996	1152	2148
Truck	0	0	0
Person Trips by Other Modes	0	0	0

Scenario - 2

Scenario Name: PM Peak

User Group:

Dev. phase: 1

No. of Years to Project Traffic : 0

Analyst Note:

Warning:

VEHICLE TRIPS BEFORE REDUCTION

Land Use & Data Source	Location	IV	Size	Time Period	Method Rate/Equation	Entry Split%	Exit Split%	Total
210 - Single-Family Detached Housing	General	Dwelling Units	135	Weekday, Peak Hour of	Best Fit (LOG)	85	50	135
Data Source: Trip Gen Manual, 10th Ed	Urban/Suburban			Adjacent Street Traffic,	Ln(T) =0.96Ln(X) + 0.20	63%	37%	
210(1) - Single-Family Detached Housing	General	Dwelling Units	140	Weekday, Peak Hour of	Best Fit (LOG)	88	52	140
Data Source: Trip Gen Manual, 10th Ed	Urban/Suburban			Adjacent Street Traffic,	Ln(T) =0.96Ln(X) + 0.20	63%	37%	
210(2) - Single-Family Detached Housing	General	Dwelling Units	53	Weekday, Peak Hour of	Best Fit (LOG)	35	20	55
Data Source: Trip Gen Manual, 10th Ed	Urban/Suburban			Adjacent Street Traffic,	Ln(T) =0.96Ln(X) + 0.20	63%	37%	
210(3) - Single-Family Detached Housing	General	Dwelling Units	120	Weekday, Peak Hour of	Best Fit (LOG)	76	45	121
Data Source: Trip Gen Manual, 10th Ed	Urban/Suburban			Adjacent Street Traffic,	Ln(T) =0.96Ln(X) + 0.20	63%	37%	
210(4) - Single-Family Detached Housing	General	Dwelling Units	117	Weekday, Peak Hour	Best Fit (LOG)	74	44	118
Data Source: Trip Gen Manual, 10th Ed	Urban/Suburban			of Adjacent Street	Ln(T) =0.96Ln(X) + 0.20	63%	37%	
210(5) - Single-Family Detached Housing	General	Dwelling Units	102	Weekday, Peak Hour of	Best Fit (LOG)	65	38	103
Data Source: Trip Gen Manual, 10th Ed	Urban/Suburban			Adjacent Street Traffic,	Ln(T) =0.96Ln(X) + 0.20	63%	37%	
210(6) - Single-Family Detached Housing	General	Dwelling Units	193	Weekday, Peak Hour of	Best Fit (LOG)	120	71	191
Data Source: Trip Gen Manual, 10th Ed	Urban/Suburban			Adjacent Street Traffic,	Ln(T) =0.96Ln(X) + 0.20	63%	37%	
210(7) - Single-Family Detached Housing	General	Dwelling Units	0	Weekday, Peak Hour of	Best Fit (LOG)	0	0	0
Data Source: Trip Gen Manual, 10th Ed	Urban/Suburban			Adjacent Street Traffic,	Ln(T) =0.96Ln(X) + 0.20	63%	37%	
220 - Multifamily Housing (Low-Rise)	General	Dwelling Units	140	Weekday, Peak Hour of	Best Fit (LOG)	50	29	79
Data Source: Trip Gen Manual, 10th Ed	Urban/Suburban			Adjacent Street Traffic,	Ln(T) =0.89Ln(X) - 0.02	63%	37%	
220(1) - Multifamily Housing (Low-Rise)	General	Dwelling Units	180	Weekday, Peak Hour of	Best Fit (LOG)	63	37	100
Data Source: Trip Gen Manual, 10th Ed	Urban/Suburban			Adjacent Street Traffic,	Ln(T) =0.89Ln(X) - 0.02	63%	37%	
820 - Shopping Center	General	1000 Sq. Ft. GLA	21	Weekday, Peak Hour of	Best Fit (LOG)	82	89	171
Data Source: Trip Gen Manual, 10th Ed	Urban/Suburban			Adjacent Street Traffic,	Ln(T) =0.74Ln(X) + 2.89	48%	52%	
820(1) - Shopping Center	General	1000 Sq. Ft. GLA	263	Weekday, Peak Hour of	Best Fit (LOG)	533	578	1111
Data Source: Trip Gen Manual, 10th Ed	Urban/Suburban			Adjacent Street Traffic,	Ln(T) =0.74Ln(X) + 2.89	48%	52%	
820(2) - Shopping Center	General	1000 Sq. Ft. GLA	55	Weekday, Peak Hour of	Best Fit (LOG)	168	182	350
Data Source: Trip Gen Manual, 10th Ed	Urban/Suburban			Adjacent Street Traffic,	Ln(T) =0.74Ln(X) + 2.89	48%	52%	
820(3) - Shopping Center	General	1000 Sq. Ft. GLA	55	Weekday, Peak Hour	Best Fit (LOG)	168	182	350
Data Source: Trip Gen Manual, 10th Ed	Urban/Suburban			of Adjacent Street	Ln(T) =0.74Ln(X) + 2.89	48%	52%	
520 - Elementary School	General	1000 Sq. Ft. GFA	79	Weekday, Peak Hour of	Average	49	60	109
Data Source: Trip Gen Manual, 10th Ed	Urban/Suburban			Adjacent Street Traffic,	1.37	45%	55%	

VEHICLE TO PERSON TRIP CONVERSION

BASELINE SITE VEHICLE CHARACTERISTICS:

Land Use	Baseline Site Vehicle Mode Share		Baseline Site Vehicle Occupancy		Baseline Site Vehicle Directional Split	
	Entry (%)	Exit (%)	Entry	Exit	Entry (%)	Exit (%)
210 - Single-Family Detached Housing	100	100	1	1	63	37
210(1) - Single-Family Detached Housing	100	100	1	1	63	37
210(2) - Single-Family Detached Housing	100	100	1	1	63	37
210(3) - Single-Family Detached Housing	100	100	1	1	63	37
210(4) - Single-Family Detached Housing	100	100	1	1	63	37

210(5) - Single-Family Detached Housing	100	100	1	1	63	37
210(6) - Single-Family Detached Housing	100	100	1	1	63	37
210(7) - Single-Family Detached Housing	100	100	1	1	63	37
220 - Multifamily Housing (Low-Rise)	100	100	1	1	63	37
220(1) - Multifamily Housing (Low-Rise)	100	100	1	1	63	37
820 - Shopping Center	100	100	1	1	48	52
820(1) - Shopping Center	100	100	1	1	48	52
820(2) - Shopping Center	100	100	1	1	48	52
820(3) - Shopping Center	100	100	1	1	48	52
520 - Elementary School	100	100	1	1	45	55

ESTIMATED BASELINE SITE PERSON TRIPS:

Land Use	Person Trips by Vehicle		Person Trips by Other Modes		Total Baseline Site Person Trips	
	Entry	Exit	Entry	Exit	Entry	Exit
210 - Single-Family Detached Housing	85	50	0	0	85	50
	135		0		135	
210(1) - Single-Family Detached Housing	88	52	0	0	88	52
	140		0		140	
210(2) - Single-Family Detached Housing	35	20	0	0	35	20
	55		0		55	
210(3) - Single-Family Detached Housing	76	45	0	0	76	45
	121		0		121	
210(4) - Single-Family Detached Housing	74	44	0	0	74	44
	118		0		118	
210(5) - Single-Family Detached Housing	65	38	0	0	65	38
	103		0		103	
210(6) - Single-Family Detached Housing	120	71	0	0	120	71
	191		0		191	
210(7) - Single-Family Detached Housing	0	0	0	0	0	0
	0		0		0	
220 - Multifamily Housing (Low-Rise)	50	29	0	0	50	29
	79		0		79	
220(1) - Multifamily Housing (Low-Rise)	63	37	0	0	63	37
	100		0		100	
820 - Shopping Center	82	89	0	0	82	89
	171		0		171	
820(1) - Shopping Center	533	578	0	0	533	578
	1111		0		1111	
820(2) - Shopping Center	168	182	0	0	168	182
	350		0		350	
820(3) - Shopping Center	168	182	0	0	168	182
	350		0		350	
520 - Elementary School	49	60	0	0	49	60
	109		0		109	

VEHICLE TRIPS AFTER MULTI-MODAL ADJUSTMENT

MODE SHARE:

Land Use	Personal Passenger Vehicle		Truck		Other Modes	
	Entry (%)	Exit (%)	Entry (%)	Exit (%)	Entry (%)	Exit (%)
210 - Single-Family Detached Housing	100%	100%	0%	0%	0%	0%
210(1) - Single-Family Detached Housing	100%	100%	0%	0%	0%	0%
210(2) - Single-Family Detached Housing	100%	100%	0%	0%	0%	0%
210(3) - Single-Family Detached Housing	100%	100%	0%	0%	0%	0%
210(4) - Single-Family Detached Housing	100%	100%	0%	0%	0%	0%

210(5) - Single-Family Detached Housing	100%	100%	0%	0%	0%	0%
210(6) - Single-Family Detached Housing	100%	100%	0%	0%	0%	0%
210(7) - Single-Family Detached Housing	100%	100%	0%	0%	0%	0%
220 - Multifamily Housing (Low-Rise)	100%	100%	0%	0%	0%	0%
220(1) - Multifamily Housing (Low-Rise)	100%	100%	0%	0%	0%	0%
820 - Shopping Center	100%	100%	0%	0%	0%	0%
820(1) - Shopping Center	100%	100%	0%	0%	0%	0%
820(2) - Shopping Center	100%	100%	0%	0%	0%	0%
820(3) - Shopping Center	100%	100%	0%	0%	0%	0%
520 - Elementary School	100%	100%	0%	0%	0%	0%

OCCUPANCY:

Land Use	Vehicle	
	Entry	Exit
210 - Single-Family Detached Housing	1.00	1.00
210(1) - Single-Family Detached Housing	1.00	1.00
210(2) - Single-Family Detached Housing	1.00	1.00
210(3) - Single-Family Detached Housing	1.00	1.00
210(4) - Single-Family Detached Housing	1.00	1.00
210(5) - Single-Family Detached Housing	1.00	1.00
210(6) - Single-Family Detached Housing	1.00	1.00
210(7) - Single-Family Detached Housing	1.00	1.00
220 - Multifamily Housing (Low-Rise)	1.00	1.00
220(1) - Multifamily Housing (Low-Rise)	1.00	1.00
820 - Shopping Center	1.00	1.00
820(1) - Shopping Center	1.00	1.00
820(2) - Shopping Center	1.00	1.00
820(3) - Shopping Center	1.00	1.00
520 - Elementary School	1.00	1.00

ADJUSTED VEHICLE TRIPS:

Land Use	Entry				Exit			
	Person Trips	Vehicle Mode Share (%)	Vehicle Occupancy	Vehical Trips	Person Trips	Vehicle Mode Share (%)	Vehicle Occupancy	Vehical Trips
210 - Single-Family Detached Housing	85	100%	1.00	85	50	100%	1.00	50
210(1) - Single-Family Detached Housing	88	100%	1.00	88	52	100%	1.00	52
210(2) - Single-Family Detached Housing	35	100%	1.00	35	20	100%	1.00	20
210(3) - Single-Family Detached Housing	76	100%	1.00	76	45	100%	1.00	45
210(4) - Single-Family Detached Housing	74	100%	1.00	74	44	100%	1.00	44
210(5) - Single-Family Detached Housing	65	100%	1.00	65	38	100%	1.00	38
210(6) - Single-Family Detached Housing	120	100%	1.00	120	71	100%	1.00	71
210(7) - Single-Family Detached Housing	0	100%	1.00	0	0	100%	1.00	0
220 - Multifamily Housing (Low-Rise)	50	100%	1.00	50	29	100%	1.00	29
220(1) - Multifamily Housing (Low-Rise)	63	100%	1.00	63	37	100%	1.00	37
820 - Shopping Center	82	100%	1.00	82	89	100%	1.00	89
820(1) - Shopping Center	533	100%	1.00	533	578	100%	1.00	578
820(2) - Shopping Center	168	100%	1.00	168	182	100%	1.00	182
820(3) - Shopping Center	168	100%	1.00	168	182	100%	1.00	182
520 - Elementary School	49	100%	1.00	49	60	100%	1.00	60

INTERNAL VEHICLE TRIP REDUCTION

LAND USE GROUP ASSIGNMENT:

Land Use	Land Use Group
210 - Single-Family Detached Housing	Residential

210(1) - Single-Family Detached Housing	Residential
210(2) - Single-Family Detached Housing	Residential
210(3) - Single-Family Detached Housing	Residential
210(4) - Single-Family Detached Housing	Residential
210(5) - Single-Family Detached Housing	Residential
210(6) - Single-Family Detached Housing	Residential
210(7) - Single-Family Detached Housing	Residential
220 - Multifamily Housing (Low-Rise)	Residential
220(1) - Multifamily Housing (Low-Rise)	Residential
820 - Shopping Center	Retail
820(1) - Shopping Center	Retail
820(2) - Shopping Center	Retail
820(3) - Shopping Center	Retail
520 - Elementary School	Others

BALANCED PERSON TRIPS:

210 - Single-Family Detached Housing								210(1) - Single-Family Detached Housing
Persons Exit	PAF	UIPTC	Unconstrained Demand	==>>> BALANCED ==>>>	Unconstrained Demand	UIPTC	PAF	Persons Entry
50	1	0	0	**0**	0	0	1	88
Persons Entry	PAF	UIPTC	Unconstrained Demand	<<<== BALANCED <<<==	Unconstrained Demand	UIPTC	PAF	Persons Exit
85	1	0	0	**0**	0	0	1	52

210 - Single-Family Detached Housing								210(2) - Single-Family Detached Housing
Persons Exit	PAF	UIPTC	Unconstrained Demand	==>>> BALANCED ==>>>	Unconstrained Demand	UIPTC	PAF	Persons Entry
50	1	0	0	**0**	0	0	1	35
Persons Entry	PAF	UIPTC	Unconstrained Demand	<<<== BALANCED <<<==	Unconstrained Demand	UIPTC	PAF	Persons Exit
85	1	0	0	**0**	0	0	1	20

210 - Single-Family Detached Housing								210(3) - Single-Family Detached Housing
Persons Exit	PAF	UIPTC	Unconstrained Demand	==>>> BALANCED ==>>>	Unconstrained Demand	UIPTC	PAF	Persons Entry
50	1	0	0	**0**	0	0	1	76
Persons Entry	PAF	UIPTC	Unconstrained Demand	<<<== BALANCED <<<==	Unconstrained Demand	UIPTC	PAF	Persons Exit
85	1	0	0	**0**	0	0	1	45

210 - Single-Family Detached Housing								210(4) - Single-Family Detached Housing
Persons Exit	PAF	UIPTC	Unconstrained Demand	==>>> BALANCED ==>>>	Unconstrained Demand	UIPTC	PAF	Persons Entry
50	1	0	0	**0**	0	0	1	74
Persons Entry	PAF	UIPTC	Unconstrained Demand	<<<== BALANCED <<<==	Unconstrained Demand	UIPTC	PAF	Persons Exit
85	1	0	0	**0**	0	0	1	44

210 - Single-Family Detached Housing								210(5) - Single-Family Detached Housing
Persons Exit	PAF	UIPTC	Unconstrained Demand	==>>> BALANCED ==>>>	Unconstrained Demand	UIPTC	PAF	Persons Entry
50	1	0	0	**0**	0	0	1	65
Persons Entry	PAF	UIPTC	Unconstrained Demand	<<<== BALANCED <<<==	Unconstrained Demand	UIPTC	PAF	Persons Exit
85	1	0	0	**0**	0	0	1	38

210 - Single-Family Detached Housing								210(6) - Single-Family Detached Housing
Persons Exit	PAF	UIPTC	Unconstrained Demand	==>>> BALANCED ==>>>	Unconstrained Demand	UIPTC	PAF	Persons Entry
50	1	0	0	**0**	0	0	1	120
Persons Entry	PAF	UIPTC	Unconstrained Demand	<<<== BALANCED <<<==	Unconstrained Demand	UIPTC	PAF	Persons Exit
85	1	0	0	**0**	0	0	1	71

210 - Single-Family Detached Housing	210(7) - Single-Family Detached Housing

Persons Exit	PAF	UIPTC	Unconstrained Demand	==>>> BALANCED ==>>>	Unconstrained Demand	UIPTC	PAF	Persons Entry
50	1	0	0	**0**	0	0	1	0
Persons Entry	PAF	UIPTC	Unconstrained Demand	<<<== BALANCED <<<==	Unconstrained Demand	UIPTC	PAF	Persons Exit
85	1	0	0	**0**	0	0	1	0
210 - Single-Family Detached Housing								220 - Multifamily Housing (Low-Rise)
Persons Exit	PAF	UIPTC	Unconstrained Demand	==>>> BALANCED ==>>>	Unconstrained Demand	UIPTC	PAF	Persons Entry
50	1	0	0	**0**	0	0	1	50
Persons Entry	PAF	UIPTC	Unconstrained Demand	<<<== BALANCED <<<==	Unconstrained Demand	UIPTC	PAF	Persons Exit
85	1	0	0	**0**	0	0	1	29
210 - Single-Family Detached Housing								220(1) - Multifamily Housing (Low-Rise)
Persons Exit	PAF	UIPTC	Unconstrained Demand	==>>> BALANCED ==>>>	Unconstrained Demand	UIPTC	PAF	Persons Entry
50	1	0	0	**0**	0	0	1	63
Persons Entry	PAF	UIPTC	Unconstrained Demand	<<<== BALANCED <<<==	Unconstrained Demand	UIPTC	PAF	Persons Exit
85	1	0	0	**0**	0	0	1	37
210 - Single-Family Detached Housing								820 - Shopping Center
Persons Exit	PAF	UIPTC	Unconstrained Demand	==>>> BALANCED ==>>>	Unconstrained Demand	UIPTC	PAF	Persons Entry
50	1	1.05	1	**0**	0	0.25	1	82
Persons Entry	PAF	UIPTC	Unconstrained Demand	<<<== BALANCED <<<==	Unconstrained Demand	UIPTC	PAF	Persons Exit
85	1	1.15	1	**1**	1	0.65	1	89
210 - Single-Family Detached Housing								820(1) - Shopping Center
Persons Exit	PAF	UIPTC	Unconstrained Demand	==>>> BALANCED ==>>>	Unconstrained Demand	UIPTC	PAF	Persons Entry
50	1	1.05	1	**1**	1	0.25	1	533
Persons Entry	PAF	UIPTC	Unconstrained Demand	<<<== BALANCED <<<==	Unconstrained Demand	UIPTC	PAF	Persons Exit
85	1	1.15	1	**1**	4	0.65	1	578
210 - Single-Family Detached Housing								820(2) - Shopping Center
Persons Exit	PAF	UIPTC	Unconstrained Demand	==>>> BALANCED ==>>>	Unconstrained Demand	UIPTC	PAF	Persons Entry
50	1	1.05	1	**0**	0	0.25	1	168
Persons Entry	PAF	UIPTC	Unconstrained Demand	<<<== BALANCED <<<==	Unconstrained Demand	UIPTC	PAF	Persons Exit
85	1	1.15	1	**1**	1	0.65	1	182
210 - Single-Family Detached Housing								820(3) - Shopping Center
Persons Exit	PAF	UIPTC	Unconstrained Demand	==>>> BALANCED ==>>>	Unconstrained Demand	UIPTC	PAF	Persons Entry
50	1	1.05	1	**0**	0	0.25	1	168
Persons Entry	PAF	UIPTC	Unconstrained Demand	<<<== BALANCED <<<==	Unconstrained Demand	UIPTC	PAF	Persons Exit
85	1	1.15	1	**1**	1	0.65	1	182
210 - Single-Family Detached Housing								520 - Elementary School
Persons Exit	PAF	UIPTC	Unconstrained Demand	==>>> BALANCED ==>>>	Unconstrained Demand	UIPTC	PAF	Persons Entry
50	1	0	0	**0**	0	0	1	49
Persons Entry	PAF	UIPTC	Unconstrained Demand	<<<== BALANCED <<<==	Unconstrained Demand	UIPTC	PAF	Persons Exit
85	1	0	0	**0**	0	0	1	60
210(1) - Single-Family Detached Housing								210(2) - Single-Family Detached Housing
Persons Exit	PAF	UIPTC	Unconstrained Demand	==>>> BALANCED ==>>>	Unconstrained Demand	UIPTC	PAF	Persons Entry
52	1	0	0	**0**	0	0	1	35
Persons Entry	PAF	UIPTC	Unconstrained Demand	<<<== BALANCED <<<==	Unconstrained Demand	UIPTC	PAF	Persons Exit
88	1	0	0	**0**	0	0	1	20
210(1) - Single-Family Detached Housing								210(3) - Single-Family Detached Housing
Persons Exit	PAF	UIPTC	Unconstrained Demand	==>>> BALANCED ==>>>	Unconstrained Demand	UIPTC	PAF	Persons Entry
52	1	0	0	**0**	0	0	1	76

Persons Entry	PAF	UIPTC	Unconstrained Demand	**<<<== BALANCED <<<==**	Unconstrained Demand	UIPTC	PAF	Persons Exit
88	1	0	0	**0**	0	0	1	45
210(1) - Single-Family Detached Housing								210(4) - Single-Family Detached Housing
Persons Exit	PAF	UIPTC	Unconstrained Demand	**==>>> BALANCED ==>>>**	Unconstrained Demand	UIPTC	PAF	Persons Entry
52	1	0	0	**0**	0	0	1	74
Persons Entry	PAF	UIPTC	Unconstrained Demand	**<<<== BALANCED <<<==**	Unconstrained Demand	UIPTC	PAF	Persons Exit
88	1	0	0	**0**	0	0	1	44
210(1) - Single-Family Detached Housing								210(5) - Single-Family Detached Housing
Persons Exit	PAF	UIPTC	Unconstrained Demand	**==>>> BALANCED ==>>>**	Unconstrained Demand	UIPTC	PAF	Persons Entry
52	1	0	0	**0**	0	0	1	65
Persons Entry	PAF	UIPTC	Unconstrained Demand	**<<<== BALANCED <<<==**	Unconstrained Demand	UIPTC	PAF	Persons Exit
88	1	0	0	**0**	0	0	1	38
210(1) - Single-Family Detached Housing								210(6) - Single-Family Detached Housing
Persons Exit	PAF	UIPTC	Unconstrained Demand	**==>>> BALANCED ==>>>**	Unconstrained Demand	UIPTC	PAF	Persons Entry
52	1	0	0	**0**	0	0	1	120
Persons Entry	PAF	UIPTC	Unconstrained Demand	**<<<== BALANCED <<<==**	Unconstrained Demand	UIPTC	PAF	Persons Exit
88	1	0	0	**0**	0	0	1	71
210(1) - Single-Family Detached Housing								210(7) - Single-Family Detached Housing
Persons Exit	PAF	UIPTC	Unconstrained Demand	**==>>> BALANCED ==>>>**	Unconstrained Demand	UIPTC	PAF	Persons Entry
52	1	0	0	**0**	0	0	1	0
Persons Entry	PAF	UIPTC	Unconstrained Demand	**<<<== BALANCED <<<==**	Unconstrained Demand	UIPTC	PAF	Persons Exit
88	1	0	0	**0**	0	0	1	0
210(1) - Single-Family Detached Housing								220 - Multifamily Housing (Low-Rise)
Persons Exit	PAF	UIPTC	Unconstrained Demand	**==>>> BALANCED ==>>>**	Unconstrained Demand	UIPTC	PAF	Persons Entry
52	1	0	0	**0**	0	0	1	50
Persons Entry	PAF	UIPTC	Unconstrained Demand	**<<<== BALANCED <<<==**	Unconstrained Demand	UIPTC	PAF	Persons Exit
88	1	0	0	**0**	0	0	1	29
210(1) - Single-Family Detached Housing								220(1) - Multifamily Housing (Low-Rise)
Persons Exit	PAF	UIPTC	Unconstrained Demand	**==>>> BALANCED ==>>>**	Unconstrained Demand	UIPTC	PAF	Persons Entry
52	1	0	0	**0**	0	0	1	63
Persons Entry	PAF	UIPTC	Unconstrained Demand	**<<<== BALANCED <<<==**	Unconstrained Demand	UIPTC	PAF	Persons Exit
88	1	0	0	**0**	0	0	1	37
210(1) - Single-Family Detached Housing								820 - Shopping Center
Persons Exit	PAF	UIPTC	Unconstrained Demand	**==>>> BALANCED ==>>>**	Unconstrained Demand	UIPTC	PAF	Persons Entry
52	1	1.05	1	**0**	0	0.25	1	82
Persons Entry	PAF	UIPTC	Unconstrained Demand	**<<<== BALANCED <<<==**	Unconstrained Demand	UIPTC	PAF	Persons Exit
88	1	1.15	1	**1**	1	0.65	1	89
210(1) - Single-Family Detached Housing								820(1) - Shopping Center
Persons Exit	PAF	UIPTC	Unconstrained Demand	**==>>> BALANCED ==>>>**	Unconstrained Demand	UIPTC	PAF	Persons Entry
52	1	1.05	1	**1**	1	0.25	1	533
Persons Entry	PAF	UIPTC	Unconstrained Demand	**<<<== BALANCED <<<==**	Unconstrained Demand	UIPTC	PAF	Persons Exit
88	1	1.15	1	**1**	4	0.65	1	578
210(1) - Single-Family Detached Housing								820(2) - Shopping Center
Persons Exit	PAF	UIPTC	Unconstrained Demand	**==>>> BALANCED ==>>>**	Unconstrained Demand	UIPTC	PAF	Persons Entry
52	1	1.05	1	**0**	0	0.25	1	168
Persons Entry	PAF	UIPTC	Unconstrained Demand	**<<<== BALANCED <<<==**	Unconstrained Demand	UIPTC	PAF	Persons Exit
88	1	1.15	1	**1**	1	0.65	1	182

210(1) - Single-Family Detached Housing								820(3) - Shopping Center
Persons Exit	PAF	UIPTC	Unconstrained Demand	==>>> BALANCED ==>>>	Unconstrained Demand	UIPTC	PAF	Persons Entry
52	1	1.05	1	**0**	0	0.25	1	168
Persons Entry	PAF	UIPTC	Unconstrained Demand	<<<== BALANCED <<<==	Unconstrained Demand	UIPTC	PAF	Persons Exit
88	1	1.15	1	**1**	1	0.65	1	182

210(1) - Single-Family Detached Housing								520 - Elementary School
Persons Exit	PAF	UIPTC	Unconstrained Demand	==>>> BALANCED ==>>>	Unconstrained Demand	UIPTC	PAF	Persons Entry
52	1	0	0	**0**	0	0	1	49
Persons Entry	PAF	UIPTC	Unconstrained Demand	<<<== BALANCED <<<==	Unconstrained Demand	UIPTC	PAF	Persons Exit
88	1	0	0	**0**	0	0	1	60

210(2) - Single-Family Detached Housing								210(3) - Single-Family Detached Housing
Persons Exit	PAF	UIPTC	Unconstrained Demand	==>>> BALANCED ==>>>	Unconstrained Demand	UIPTC	PAF	Persons Entry
20	1	0	0	**0**	0	0	1	76
Persons Entry	PAF	UIPTC	Unconstrained Demand	<<<== BALANCED <<<==	Unconstrained Demand	UIPTC	PAF	Persons Exit
35	1	0	0	**0**	0	0	1	45

210(2) - Single-Family Detached Housing								210(4) - Single-Family Detached Housing
Persons Exit	PAF	UIPTC	Unconstrained Demand	==>>> BALANCED ==>>>	Unconstrained Demand	UIPTC	PAF	Persons Entry
20	1	0	0	**0**	0	0	1	74
Persons Entry	PAF	UIPTC	Unconstrained Demand	<<<== BALANCED <<<==	Unconstrained Demand	UIPTC	PAF	Persons Exit
35	1	0	0	**0**	0	0	1	44

210(2) - Single-Family Detached Housing								210(5) - Single-Family Detached Housing
Persons Exit	PAF	UIPTC	Unconstrained Demand	==>>> BALANCED ==>>>	Unconstrained Demand	UIPTC	PAF	Persons Entry
20	1	0	0	**0**	0	0	1	65
Persons Entry	PAF	UIPTC	Unconstrained Demand	<<<== BALANCED <<<==	Unconstrained Demand	UIPTC	PAF	Persons Exit
35	1	0	0	**0**	0	0	1	38

210(2) - Single-Family Detached Housing								210(6) - Single-Family Detached Housing
Persons Exit	PAF	UIPTC	Unconstrained Demand	==>>> BALANCED ==>>>	Unconstrained Demand	UIPTC	PAF	Persons Entry
20	1	0	0	**0**	0	0	1	120
Persons Entry	PAF	UIPTC	Unconstrained Demand	<<<== BALANCED <<<==	Unconstrained Demand	UIPTC	PAF	Persons Exit
35	1	0	0	**0**	0	0	1	71

210(2) - Single-Family Detached Housing								210(7) - Single-Family Detached Housing
Persons Exit	PAF	UIPTC	Unconstrained Demand	==>>> BALANCED ==>>>	Unconstrained Demand	UIPTC	PAF	Persons Entry
20	1	0	0	**0**	0	0	1	0
Persons Entry	PAF	UIPTC	Unconstrained Demand	<<<== BALANCED <<<==	Unconstrained Demand	UIPTC	PAF	Persons Exit
35	1	0	0	**0**	0	0	1	0

210(2) - Single-Family Detached Housing								220 - Multifamily Housing (Low-Rise)
Persons Exit	PAF	UIPTC	Unconstrained Demand	==>>> BALANCED ==>>>	Unconstrained Demand	UIPTC	PAF	Persons Entry
20	1	0	0	**0**	0	0	1	50
Persons Entry	PAF	UIPTC	Unconstrained Demand	<<<== BALANCED <<<==	Unconstrained Demand	UIPTC	PAF	Persons Exit
35	1	0	0	**0**	0	0	1	29

210(2) - Single-Family Detached Housing								220(1) - Multifamily Housing (Low-Rise)
Persons Exit	PAF	UIPTC	Unconstrained Demand	==>>> BALANCED ==>>>	Unconstrained Demand	UIPTC	PAF	Persons Entry
20	1	0	0	**0**	0	0	1	63
Persons Entry	PAF	UIPTC	Unconstrained Demand	<<<== BALANCED <<<==	Unconstrained Demand	UIPTC	PAF	Persons Exit
35	1	0	0	**0**	0	0	1	37

210(2) - Single-Family Detached Housing								820 - Shopping Center

Persons Exit	PAF	UIPTC	Unconstrained Demand	==>>> BALANCED ==>>>	Unconstrained Demand	UIPTC	PAF	Persons Entry
20	1	1.05	0	**0**	0	0.25	1	82
Persons Entry	PAF	UIPTC	Unconstrained Demand	<<<== BALANCED <<<==	Unconstrained Demand	UIPTC	PAF	Persons Exit
35	1	1.15	0	**0**	1	0.65	1	89
210(2) - Single-Family Detached Housing								820(1) - Shopping Center
Persons Exit	PAF	UIPTC	Unconstrained Demand	==>>> BALANCED ==>>>	Unconstrained Demand	UIPTC	PAF	Persons Entry
20	1	1.05	0	**0**	1	0.25	1	533
Persons Entry	PAF	UIPTC	Unconstrained Demand	<<<== BALANCED <<<==	Unconstrained Demand	UIPTC	PAF	Persons Exit
35	1	1.15	0	**0**	4	0.65	1	578
210(2) - Single-Family Detached Housing								820(2) - Shopping Center
Persons Exit	PAF	UIPTC	Unconstrained Demand	==>>> BALANCED ==>>>	Unconstrained Demand	UIPTC	PAF	Persons Entry
20	1	1.05	0	**0**	0	0.25	1	168
Persons Entry	PAF	UIPTC	Unconstrained Demand	<<<== BALANCED <<<==	Unconstrained Demand	UIPTC	PAF	Persons Exit
35	1	1.15	0	**0**	1	0.65	1	182
210(2) - Single-Family Detached Housing								820(3) - Shopping Center
Persons Exit	PAF	UIPTC	Unconstrained Demand	==>>> BALANCED ==>>>	Unconstrained Demand	UIPTC	PAF	Persons Entry
20	1	1.05	0	**0**	0	0.25	1	168
Persons Entry	PAF	UIPTC	Unconstrained Demand	<<<== BALANCED <<<==	Unconstrained Demand	UIPTC	PAF	Persons Exit
35	1	1.15	0	**0**	1	0.65	1	182
210(2) - Single-Family Detached Housing								520 - Elementary School
Persons Exit	PAF	UIPTC	Unconstrained Demand	==>>> BALANCED ==>>>	Unconstrained Demand	UIPTC	PAF	Persons Entry
20	1	0	0	**0**	0	0	1	49
Persons Entry	PAF	UIPTC	Unconstrained Demand	<<<== BALANCED <<<==	Unconstrained Demand	UIPTC	PAF	Persons Exit
35	1	0	0	**0**	0	0	1	60
210(3) - Single-Family Detached Housing								210(4) - Single-Family Detached Housing
Persons Exit	PAF	UIPTC	Unconstrained Demand	==>>> BALANCED ==>>>	Unconstrained Demand	UIPTC	PAF	Persons Entry
45	1	0	0	**0**	0	0	1	74
Persons Entry	PAF	UIPTC	Unconstrained Demand	<<<== BALANCED <<<==	Unconstrained Demand	UIPTC	PAF	Persons Exit
76	1	0	0	**0**	0	0	1	44
210(3) - Single-Family Detached Housing								210(5) - Single-Family Detached Housing
Persons Exit	PAF	UIPTC	Unconstrained Demand	==>>> BALANCED ==>>>	Unconstrained Demand	UIPTC	PAF	Persons Entry
45	1	0	0	**0**	0	0	1	65
Persons Entry	PAF	UIPTC	Unconstrained Demand	<<<== BALANCED <<<==	Unconstrained Demand	UIPTC	PAF	Persons Exit
76	1	0	0	**0**	0	0	1	38
210(3) - Single-Family Detached Housing								210(6) - Single-Family Detached Housing
Persons Exit	PAF	UIPTC	Unconstrained Demand	==>>> BALANCED ==>>>	Unconstrained Demand	UIPTC	PAF	Persons Entry
45	1	0	0	**0**	0	0	1	120
Persons Entry	PAF	UIPTC	Unconstrained Demand	<<<== BALANCED <<<==	Unconstrained Demand	UIPTC	PAF	Persons Exit
76	1	0	0	**0**	0	0	1	71
210(3) - Single-Family Detached Housing								210(7) - Single-Family Detached Housing
Persons Exit	PAF	UIPTC	Unconstrained Demand	==>>> BALANCED ==>>>	Unconstrained Demand	UIPTC	PAF	Persons Entry
45	1	0	0	**0**	0	0	1	0
Persons Entry	PAF	UIPTC	Unconstrained Demand	<<<== BALANCED <<<==	Unconstrained Demand	UIPTC	PAF	Persons Exit
76	1	0	0	**0**	0	0	1	0
210(3) - Single-Family Detached Housing								220 - Multifamily Housing (Low-Rise)
Persons Exit	PAF	UIPTC	Unconstrained Demand	==>>> BALANCED ==>>>	Unconstrained Demand	UIPTC	PAF	Persons Entry
45	1	0	0	**0**	0	0	1	50

Persons Entry	PAF	UIPTC	Unconstrained Demand	**<<<== BALANCED <<<==**	Unconstrained Demand	UIPTC	PAF	Persons Exit
76	1	0	0	**0**	0	0	1	29
210(3) - Single-Family Detached Housing								220(1) - Multifamily Housing (Low-Rise)
Persons Exit	PAF	UIPTC	Unconstrained Demand	**==>>> BALANCED ==>>>**	Unconstrained Demand	UIPTC	PAF	Persons Entry
45	1	0	0	**0**	0	0	1	63
Persons Entry	PAF	UIPTC	Unconstrained Demand	**<<<== BALANCED <<<==**	Unconstrained Demand	UIPTC	PAF	Persons Exit
76	1	0	0	**0**	0	0	1	37
210(3) - Single-Family Detached Housing								820 - Shopping Center
Persons Exit	PAF	UIPTC	Unconstrained Demand	**==>>> BALANCED ==>>>**	Unconstrained Demand	UIPTC	PAF	Persons Entry
45	1	1.05	0	**0**	0	0.25	1	82
Persons Entry	PAF	UIPTC	Unconstrained Demand	**<<<== BALANCED <<<==**	Unconstrained Demand	UIPTC	PAF	Persons Exit
76	1	1.15	1	**1**	1	0.65	1	89
210(3) - Single-Family Detached Housing								820(1) - Shopping Center
Persons Exit	PAF	UIPTC	Unconstrained Demand	**==>>> BALANCED ==>>>**	Unconstrained Demand	UIPTC	PAF	Persons Entry
45	1	1.05	0	**0**	1	0.25	1	533
Persons Entry	PAF	UIPTC	Unconstrained Demand	**<<<== BALANCED <<<==**	Unconstrained Demand	UIPTC	PAF	Persons Exit
76	1	1.15	1	**1**	4	0.65	1	578
210(3) - Single-Family Detached Housing								820(2) - Shopping Center
Persons Exit	PAF	UIPTC	Unconstrained Demand	**==>>> BALANCED ==>>>**	Unconstrained Demand	UIPTC	PAF	Persons Entry
45	1	1.05	0	**0**	0	0.25	1	168
Persons Entry	PAF	UIPTC	Unconstrained Demand	**<<<== BALANCED <<<==**	Unconstrained Demand	UIPTC	PAF	Persons Exit
76	1	1.15	1	**1**	1	0.65	1	182
210(3) - Single-Family Detached Housing								820(3) - Shopping Center
Persons Exit	PAF	UIPTC	Unconstrained Demand	**==>>> BALANCED ==>>>**	Unconstrained Demand	UIPTC	PAF	Persons Entry
45	1	1.05	0	**0**	0	0.25	1	168
Persons Entry	PAF	UIPTC	Unconstrained Demand	**<<<== BALANCED <<<==**	Unconstrained Demand	UIPTC	PAF	Persons Exit
76	1	1.15	1	**1**	1	0.65	1	182
210(3) - Single-Family Detached Housing								520 - Elementary School
Persons Exit	PAF	UIPTC	Unconstrained Demand	**==>>> BALANCED ==>>>**	Unconstrained Demand	UIPTC	PAF	Persons Entry
45	1	0	0	**0**	0	0	1	49
Persons Entry	PAF	UIPTC	Unconstrained Demand	**<<<== BALANCED <<<==**	Unconstrained Demand	UIPTC	PAF	Persons Exit
76	1	0	0	**0**	0	0	1	60
210(4) - Single-Family Detached Housing								210(5) - Single-Family Detached Housing
Persons Exit	PAF	UIPTC	Unconstrained Demand	**==>>> BALANCED ==>>>**	Unconstrained Demand	UIPTC	PAF	Persons Entry
44	1	0	0	**0**	0	0	1	65
Persons Entry	PAF	UIPTC	Unconstrained Demand	**<<<== BALANCED <<<==**	Unconstrained Demand	UIPTC	PAF	Persons Exit
74	1	0	0	**0**	0	0	1	38
210(4) - Single-Family Detached Housing								210(6) - Single-Family Detached Housing
Persons Exit	PAF	UIPTC	Unconstrained Demand	**==>>> BALANCED ==>>>**	Unconstrained Demand	UIPTC	PAF	Persons Entry
44	1	0	0	**0**	0	0	1	120
Persons Entry	PAF	UIPTC	Unconstrained Demand	**<<<== BALANCED <<<==**	Unconstrained Demand	UIPTC	PAF	Persons Exit
74	1	0	0	**0**	0	0	1	71
210(4) - Single-Family Detached Housing								210(7) - Single-Family Detached Housing
Persons Exit	PAF	UIPTC	Unconstrained Demand	**==>>> BALANCED ==>>>**	Unconstrained Demand	UIPTC	PAF	Persons Entry
44	1	0	0	**0**	0	0	1	0
Persons Entry	PAF	UIPTC	Unconstrained Demand	**<<<== BALANCED <<<==**	Unconstrained Demand	UIPTC	PAF	Persons Exit
74	1	0	0	**0**	0	0	1	0

210(4) - Single-Family Detached Housing								220 - Multifamily Housing (Low-Rise)
Persons Exit	PAF	UIPTC	Unconstrained Demand	==>>> BALANCED ==>>>	Unconstrained Demand	UIPTC	PAF	Persons Entry
44	1	0	0	**0**	0	0	1	50
Persons Entry	PAF	UIPTC	Unconstrained Demand	<<<== BALANCED <<<==	Unconstrained Demand	UIPTC	PAF	Persons Exit
74	1	0	0	**0**	0	0	1	29

210(4) - Single-Family Detached Housing								220(1) - Multifamily Housing (Low-Rise)
Persons Exit	PAF	UIPTC	Unconstrained Demand	==>>> BALANCED ==>>>	Unconstrained Demand	UIPTC	PAF	Persons Entry
44	1	0	0	**0**	0	0	1	63
Persons Entry	PAF	UIPTC	Unconstrained Demand	<<<== BALANCED <<<==	Unconstrained Demand	UIPTC	PAF	Persons Exit
74	1	0	0	**0**	0	0	1	37

210(4) - Single-Family Detached Housing								820 - Shopping Center
Persons Exit	PAF	UIPTC	Unconstrained Demand	==>>> BALANCED ==>>>	Unconstrained Demand	UIPTC	PAF	Persons Entry
44	1	1.05	0	**0**	0	0.25	1	82
Persons Entry	PAF	UIPTC	Unconstrained Demand	<<<== BALANCED <<<==	Unconstrained Demand	UIPTC	PAF	Persons Exit
74	1	1.15	1	**1**	1	0.65	1	89

210(4) - Single-Family Detached Housing								820(1) - Shopping Center
Persons Exit	PAF	UIPTC	Unconstrained Demand	==>>> BALANCED ==>>>	Unconstrained Demand	UIPTC	PAF	Persons Entry
44	1	1.05	0	**0**	1	0.25	1	533
Persons Entry	PAF	UIPTC	Unconstrained Demand	<<<== BALANCED <<<==	Unconstrained Demand	UIPTC	PAF	Persons Exit
74	1	1.15	1	**1**	4	0.65	1	578

210(4) - Single-Family Detached Housing								820(2) - Shopping Center
Persons Exit	PAF	UIPTC	Unconstrained Demand	==>>> BALANCED ==>>>	Unconstrained Demand	UIPTC	PAF	Persons Entry
44	1	1.05	0	**0**	0	0.25	1	168
Persons Entry	PAF	UIPTC	Unconstrained Demand	<<<== BALANCED <<<==	Unconstrained Demand	UIPTC	PAF	Persons Exit
74	1	1.15	1	**1**	1	0.65	1	182

210(4) - Single-Family Detached Housing								820(3) - Shopping Center
Persons Exit	PAF	UIPTC	Unconstrained Demand	==>>> BALANCED ==>>>	Unconstrained Demand	UIPTC	PAF	Persons Entry
44	1	1.05	0	**0**	0	0.25	1	168
Persons Entry	PAF	UIPTC	Unconstrained Demand	<<<== BALANCED <<<==	Unconstrained Demand	UIPTC	PAF	Persons Exit
74	1	1.15	1	**1**	1	0.65	1	182

210(4) - Single-Family Detached Housing								520 - Elementary School
Persons Exit	PAF	UIPTC	Unconstrained Demand	==>>> BALANCED ==>>>	Unconstrained Demand	UIPTC	PAF	Persons Entry
44	1	0	0	**0**	0	0	1	49
Persons Entry	PAF	UIPTC	Unconstrained Demand	<<<== BALANCED <<<==	Unconstrained Demand	UIPTC	PAF	Persons Exit
74	1	0	0	**0**	0	0	1	60

210(5) - Single-Family Detached Housing								210(6) - Single-Family Detached Housing
Persons Exit	PAF	UIPTC	Unconstrained Demand	==>>> BALANCED ==>>>	Unconstrained Demand	UIPTC	PAF	Persons Entry
38	1	0	0	**0**	0	0	1	120
Persons Entry	PAF	UIPTC	Unconstrained Demand	<<<== BALANCED <<<==	Unconstrained Demand	UIPTC	PAF	Persons Exit
65	1	0	0	**0**	0	0	1	71

210(5) - Single-Family Detached Housing								210(7) - Single-Family Detached Housing
Persons Exit	PAF	UIPTC	Unconstrained Demand	==>>> BALANCED ==>>>	Unconstrained Demand	UIPTC	PAF	Persons Entry
38	1	0	0	**0**	0	0	1	0
Persons Entry	PAF	UIPTC	Unconstrained Demand	<<<== BALANCED <<<==	Unconstrained Demand	UIPTC	PAF	Persons Exit
65	1	0	0	**0**	0	0	1	0

210(5) - Single-Family Detached Housing								220 - Multifamily Housing (Low-Rise)

Persons Exit	PAF	UIPTC	Unconstrained Demand	==>>> BALANCED ==>>>	Unconstrained Demand	UIPTC	PAF	Persons Entry
38	1	0	0	**0**	0	0	1	50
Persons Entry	PAF	UIPTC	Unconstrained Demand	<<<== BALANCED <<<==	Unconstrained Demand	UIPTC	PAF	Persons Exit
65	1	0	0	**0**	0	0	1	29
210(5) - Single-Family Detached Housing								220(1) - Multifamily Housing (Low-Rise)
Persons Exit	PAF	UIPTC	Unconstrained Demand	==>>> BALANCED ==>>>	Unconstrained Demand	UIPTC	PAF	Persons Entry
38	1	0	0	**0**	0	0	1	63
Persons Entry	PAF	UIPTC	Unconstrained Demand	<<<== BALANCED <<<==	Unconstrained Demand	UIPTC	PAF	Persons Exit
65	1	0	0	**0**	0	0	1	37
210(5) - Single-Family Detached Housing								820 - Shopping Center
Persons Exit	PAF	UIPTC	Unconstrained Demand	==>>> BALANCED ==>>>	Unconstrained Demand	UIPTC	PAF	Persons Entry
38	1	1.05	0	**0**	0	0.25	1	82
Persons Entry	PAF	UIPTC	Unconstrained Demand	<<<== BALANCED <<<==	Unconstrained Demand	UIPTC	PAF	Persons Exit
65	1	1.15	1	**1**	1	0.65	1	89
210(5) - Single-Family Detached Housing								820(1) - Shopping Center
Persons Exit	PAF	UIPTC	Unconstrained Demand	==>>> BALANCED ==>>>	Unconstrained Demand	UIPTC	PAF	Persons Entry
38	1	1.05	0	**0**	1	0.25	1	533
Persons Entry	PAF	UIPTC	Unconstrained Demand	<<<== BALANCED <<<==	Unconstrained Demand	UIPTC	PAF	Persons Exit
65	1	1.15	1	**1**	4	0.65	1	578
210(5) - Single-Family Detached Housing								820(2) - Shopping Center
Persons Exit	PAF	UIPTC	Unconstrained Demand	==>>> BALANCED ==>>>	Unconstrained Demand	UIPTC	PAF	Persons Entry
38	1	1.05	0	**0**	0	0.25	1	168
Persons Entry	PAF	UIPTC	Unconstrained Demand	<<<== BALANCED <<<==	Unconstrained Demand	UIPTC	PAF	Persons Exit
65	1	1.15	1	**1**	1	0.65	1	182
210(5) - Single-Family Detached Housing								820(3) - Shopping Center
Persons Exit	PAF	UIPTC	Unconstrained Demand	==>>> BALANCED ==>>>	Unconstrained Demand	UIPTC	PAF	Persons Entry
38	1	1.05	0	**0**	0	0.25	1	168
Persons Entry	PAF	UIPTC	Unconstrained Demand	<<<== BALANCED <<<==	Unconstrained Demand	UIPTC	PAF	Persons Exit
65	1	1.15	1	**1**	1	0.65	1	182
210(5) - Single-Family Detached Housing								520 - Elementary School
Persons Exit	PAF	UIPTC	Unconstrained Demand	==>>> BALANCED ==>>>	Unconstrained Demand	UIPTC	PAF	Persons Entry
38	1	0	0	**0**	0	0	1	49
Persons Entry	PAF	UIPTC	Unconstrained Demand	<<<== BALANCED <<<==	Unconstrained Demand	UIPTC	PAF	Persons Exit
65	1	0	0	**0**	0	0	1	60
210(6) - Single-Family Detached Housing								210(7) - Single-Family Detached Housing
Persons Exit	PAF	UIPTC	Unconstrained Demand	==>>> BALANCED ==>>>	Unconstrained Demand	UIPTC	PAF	Persons Entry
71	1	0	0	**0**	0	0	1	0
Persons Entry	PAF	UIPTC	Unconstrained Demand	<<<== BALANCED <<<==	Unconstrained Demand	UIPTC	PAF	Persons Exit
120	1	0	0	**0**	0	0	1	0
210(6) - Single-Family Detached Housing								220 - Multifamily Housing (Low-Rise)
Persons Exit	PAF	UIPTC	Unconstrained Demand	==>>> BALANCED ==>>>	Unconstrained Demand	UIPTC	PAF	Persons Entry
71	1	0	0	**0**	0	0	1	50
Persons Entry	PAF	UIPTC	Unconstrained Demand	<<<== BALANCED <<<==	Unconstrained Demand	UIPTC	PAF	Persons Exit
120	1	0	0	**0**	0	0	1	29
210(6) - Single-Family Detached Housing								220(1) - Multifamily Housing (Low-Rise)
Persons Exit	PAF	UIPTC	Unconstrained Demand	==>>> BALANCED ==>>>	Unconstrained Demand	UIPTC	PAF	Persons Entry
71	1	0	0	**0**	0	0	1	63

Persons Entry	PAF	UIPTC	Unconstrained Demand	**<<<== BALANCED <<<==**	Unconstrained Demand	UIPTC	PAF	Persons Exit
120	1	0	0	**0**	0	0	1	37
210(6) - Single-Family Detached Housing								820 - Shopping Center
Persons Exit	PAF	UIPTC	Unconstrained Demand	**==>>> BALANCED ==>>>**	Unconstrained Demand	UIPTC	PAF	Persons Entry
71	1	1.05	1	**0**	0	0.25	1	82
Persons Entry	PAF	UIPTC	Unconstrained Demand	**<<<== BALANCED <<<==**	Unconstrained Demand	UIPTC	PAF	Persons Exit
120	1	1.15	1	**1**	1	0.65	1	89
210(6) - Single-Family Detached Housing								820(1) - Shopping Center
Persons Exit	PAF	UIPTC	Unconstrained Demand	**==>>> BALANCED ==>>>**	Unconstrained Demand	UIPTC	PAF	Persons Entry
71	1	1.05	1	**1**	1	0.25	1	533
Persons Entry	PAF	UIPTC	Unconstrained Demand	**<<<== BALANCED <<<==**	Unconstrained Demand	UIPTC	PAF	Persons Exit
120	1	1.15	1	**1**	4	0.65	1	578
210(6) - Single-Family Detached Housing								820(2) - Shopping Center
Persons Exit	PAF	UIPTC	Unconstrained Demand	**==>>> BALANCED ==>>>**	Unconstrained Demand	UIPTC	PAF	Persons Entry
71	1	1.05	1	**0**	0	0.25	1	168
Persons Entry	PAF	UIPTC	Unconstrained Demand	**<<<== BALANCED <<<==**	Unconstrained Demand	UIPTC	PAF	Persons Exit
120	1	1.15	1	**1**	1	0.65	1	182
210(6) - Single-Family Detached Housing								820(3) - Shopping Center
Persons Exit	PAF	UIPTC	Unconstrained Demand	**==>>> BALANCED ==>>>**	Unconstrained Demand	UIPTC	PAF	Persons Entry
71	1	1.05	1	**0**	0	0.25	1	168
Persons Entry	PAF	UIPTC	Unconstrained Demand	**<<<== BALANCED <<<==**	Unconstrained Demand	UIPTC	PAF	Persons Exit
120	1	1.15	1	**1**	1	0.65	1	182
210(6) - Single-Family Detached Housing								520 - Elementary School
Persons Exit	PAF	UIPTC	Unconstrained Demand	**==>>> BALANCED ==>>>**	Unconstrained Demand	UIPTC	PAF	Persons Entry
71	1	0	0	**0**	0	0	1	49
Persons Entry	PAF	UIPTC	Unconstrained Demand	**<<<== BALANCED <<<==**	Unconstrained Demand	UIPTC	PAF	Persons Exit
120	1	0	0	**0**	0	0	1	60
210(7) - Single-Family Detached Housing								220 - Multifamily Housing (Low-Rise)
Persons Exit	PAF	UIPTC	Unconstrained Demand	**==>>> BALANCED ==>>>**	Unconstrained Demand	UIPTC	PAF	Persons Entry
0	1	0	0	**0**	0	0	1	50
Persons Entry	PAF	UIPTC	Unconstrained Demand	**<<<== BALANCED <<<==**	Unconstrained Demand	UIPTC	PAF	Persons Exit
0	1	0	0	**0**	0	0	1	29
210(7) - Single-Family Detached Housing								220(1) - Multifamily Housing (Low-Rise)
Persons Exit	PAF	UIPTC	Unconstrained Demand	**==>>> BALANCED ==>>>**	Unconstrained Demand	UIPTC	PAF	Persons Entry
0	1	0	0	**0**	0	0	1	63
Persons Entry	PAF	UIPTC	Unconstrained Demand	**<<<== BALANCED <<<==**	Unconstrained Demand	UIPTC	PAF	Persons Exit
0	1	0	0	**0**	0	0	1	37
210(7) - Single-Family Detached Housing								820 - Shopping Center
Persons Exit	PAF	UIPTC	Unconstrained Demand	**==>>> BALANCED ==>>>**	Unconstrained Demand	UIPTC	PAF	Persons Entry
0	1	1.05	0	**0**	0	0.25	1	82
Persons Entry	PAF	UIPTC	Unconstrained Demand	**<<<== BALANCED <<<==**	Unconstrained Demand	UIPTC	PAF	Persons Exit
0	1	1.15	0	**0**	1	0.65	1	89
210(7) - Single-Family Detached Housing								820(1) - Shopping Center
Persons Exit	PAF	UIPTC	Unconstrained Demand	**==>>> BALANCED ==>>>**	Unconstrained Demand	UIPTC	PAF	Persons Entry
0	1	1.05	0	**0**	1	0.25	1	533
Persons Entry	PAF	UIPTC	Unconstrained Demand	**<<<== BALANCED <<<==**	Unconstrained Demand	UIPTC	PAF	Persons Exit
0	1	1.15	0	**0**	4	0.65	1	578

210(7) - Single-Family Detached Housing								820(2) - Shopping Center
Persons Exit	PAF	UIPTC	Unconstrained Demand	==>>> BALANCED ==>>>	Unconstrained Demand	UIPTC	PAF	Persons Entry
0	1	1.05	0	**0**	0	0.25	1	168
Persons Entry	PAF	UIPTC	Unconstrained Demand	<<<== BALANCED <<<==	Unconstrained Demand	UIPTC	PAF	Persons Exit
0	1	1.15	0	**0**	1	0.65	1	182

210(7) - Single-Family Detached Housing								820(3) - Shopping Center
Persons Exit	PAF	UIPTC	Unconstrained Demand	==>>> BALANCED ==>>>	Unconstrained Demand	UIPTC	PAF	Persons Entry
0	1	1.05	0	**0**	0	0.25	1	168
Persons Entry	PAF	UIPTC	Unconstrained Demand	<<<== BALANCED <<<==	Unconstrained Demand	UIPTC	PAF	Persons Exit
0	1	1.15	0	**0**	1	0.65	1	182

210(7) - Single-Family Detached Housing								520 - Elementary School
Persons Exit	PAF	UIPTC	Unconstrained Demand	==>>> BALANCED ==>>>	Unconstrained Demand	UIPTC	PAF	Persons Entry
0	1	0	0	**0**	0	0	1	49
Persons Entry	PAF	UIPTC	Unconstrained Demand	<<<== BALANCED <<<==	Unconstrained Demand	UIPTC	PAF	Persons Exit
0	1	0	0	**0**	0	0	1	60

220 - Multifamily Housing (Low-Rise)								220(1) - Multifamily Housing (Low-Rise)
Persons Exit	PAF	UIPTC	Unconstrained Demand	==>>> BALANCED ==>>>	Unconstrained Demand	UIPTC	PAF	Persons Entry
29	1	0	0	**0**	0	0	1	63
Persons Entry	PAF	UIPTC	Unconstrained Demand	<<<== BALANCED <<<==	Unconstrained Demand	UIPTC	PAF	Persons Exit
50	1	0	0	**0**	0	0	1	37

220 - Multifamily Housing (Low-Rise)								820 - Shopping Center
Persons Exit	PAF	UIPTC	Unconstrained Demand	==>>> BALANCED ==>>>	Unconstrained Demand	UIPTC	PAF	Persons Entry
29	1	1.05	0	**0**	0	0.25	1	82
Persons Entry	PAF	UIPTC	Unconstrained Demand	<<<== BALANCED <<<==	Unconstrained Demand	UIPTC	PAF	Persons Exit
50	1	1.15	1	**1**	1	0.65	1	89

220 - Multifamily Housing (Low-Rise)								820(1) - Shopping Center
Persons Exit	PAF	UIPTC	Unconstrained Demand	==>>> BALANCED ==>>>	Unconstrained Demand	UIPTC	PAF	Persons Entry
29	1	1.05	0	**0**	1	0.25	1	533
Persons Entry	PAF	UIPTC	Unconstrained Demand	<<<== BALANCED <<<==	Unconstrained Demand	UIPTC	PAF	Persons Exit
50	1	1.15	1	**1**	4	0.65	1	578

220 - Multifamily Housing (Low-Rise)								820(2) - Shopping Center
Persons Exit	PAF	UIPTC	Unconstrained Demand	==>>> BALANCED ==>>>	Unconstrained Demand	UIPTC	PAF	Persons Entry
29	1	1.05	0	**0**	0	0.25	1	168
Persons Entry	PAF	UIPTC	Unconstrained Demand	<<<== BALANCED <<<==	Unconstrained Demand	UIPTC	PAF	Persons Exit
50	1	1.15	1	**1**	1	0.65	1	182

220 - Multifamily Housing (Low-Rise)								820(3) - Shopping Center
Persons Exit	PAF	UIPTC	Unconstrained Demand	==>>> BALANCED ==>>>	Unconstrained Demand	UIPTC	PAF	Persons Entry
29	1	1.05	0	**0**	0	0.25	1	168
Persons Entry	PAF	UIPTC	Unconstrained Demand	<<<== BALANCED <<<==	Unconstrained Demand	UIPTC	PAF	Persons Exit
50	1	1.15	1	**1**	1	0.65	1	182

220 - Multifamily Housing (Low-Rise)								520 - Elementary School
Persons Exit	PAF	UIPTC	Unconstrained Demand	==>>> BALANCED ==>>>	Unconstrained Demand	UIPTC	PAF	Persons Entry
29	1	0	0	**0**	0	0	1	49
Persons Entry	PAF	UIPTC	Unconstrained Demand	<<<== BALANCED <<<==	Unconstrained Demand	UIPTC	PAF	Persons Exit
50	1	0	0	**0**	0	0	1	60

220(1) - Multifamily Housing (Low-Rise)	820 - Shopping Center

Persons Exit	PAF	UIPTC	Unconstrained Demand	==>>> BALANCED ==>>>	Unconstrained Demand	UIPTC	PAF	Persons Entry
37	1	1.05	0	0	0	0.25	1	82
Persons Entry	PAF	UIPTC	Unconstrained Demand	<<<== BALANCED <<<==	Unconstrained Demand	UIPTC	PAF	Persons Exit
63	1	1.15	1	1	1	0.65	1	89
220(1) - Multifamily Housing (Low-Rise)								820(1) - Shopping Center
Persons Exit	PAF	UIPTC	Unconstrained Demand	==>>> BALANCED ==>>>	Unconstrained Demand	UIPTC	PAF	Persons Entry
37	1	1.05	0	0	1	0.25	1	533
Persons Entry	PAF	UIPTC	Unconstrained Demand	<<<== BALANCED <<<==	Unconstrained Demand	UIPTC	PAF	Persons Exit
63	1	1.15	1	1	4	0.65	1	578
220(1) - Multifamily Housing (Low-Rise)								820(2) - Shopping Center
Persons Exit	PAF	UIPTC	Unconstrained Demand	==>>> BALANCED ==>>>	Unconstrained Demand	UIPTC	PAF	Persons Entry
37	1	1.05	0	0	0	0.25	1	168
Persons Entry	PAF	UIPTC	Unconstrained Demand	<<<== BALANCED <<<==	Unconstrained Demand	UIPTC	PAF	Persons Exit
63	1	1.15	1	1	1	0.65	1	182
220(1) - Multifamily Housing (Low-Rise)								820(3) - Shopping Center
Persons Exit	PAF	UIPTC	Unconstrained Demand	==>>> BALANCED ==>>>	Unconstrained Demand	UIPTC	PAF	Persons Entry
37	1	1.05	0	0	0	0.25	1	168
Persons Entry	PAF	UIPTC	Unconstrained Demand	<<<== BALANCED <<<==	Unconstrained Demand	UIPTC	PAF	Persons Exit
63	1	1.15	1	1	1	0.65	1	182
220(1) - Multifamily Housing (Low-Rise)								520 - Elementary School
Persons Exit	PAF	UIPTC	Unconstrained Demand	==>>> BALANCED ==>>>	Unconstrained Demand	UIPTC	PAF	Persons Entry
37	1	0	0	0	0	0	1	49
Persons Entry	PAF	UIPTC	Unconstrained Demand	<<<== BALANCED <<<==	Unconstrained Demand	UIPTC	PAF	Persons Exit
63	1	0	0	0	0	0	1	60
820 - Shopping Center								820(1) - Shopping Center
Persons Exit	PAF	UIPTC	Unconstrained Demand	==>>> BALANCED ==>>>	Unconstrained Demand	UIPTC	PAF	Persons Entry
89	1	0	0	0	0	0	1	533
Persons Entry	PAF	UIPTC	Unconstrained Demand	<<<== BALANCED <<<==	Unconstrained Demand	UIPTC	PAF	Persons Exit
82	1	0	0	0	0	0	1	578
820 - Shopping Center								820(2) - Shopping Center
Persons Exit	PAF	UIPTC	Unconstrained Demand	==>>> BALANCED ==>>>	Unconstrained Demand	UIPTC	PAF	Persons Entry
89	1	0	0	0	0	0	1	168
Persons Entry	PAF	UIPTC	Unconstrained Demand	<<<== BALANCED <<<==	Unconstrained Demand	UIPTC	PAF	Persons Exit
82	1	0	0	0	0	0	1	182
820 - Shopping Center								820(3) - Shopping Center
Persons Exit	PAF	UIPTC	Unconstrained Demand	==>>> BALANCED ==>>>	Unconstrained Demand	UIPTC	PAF	Persons Entry
89	1	0	0	0	0	0	1	168
Persons Entry	PAF	UIPTC	Unconstrained Demand	<<<== BALANCED <<<==	Unconstrained Demand	UIPTC	PAF	Persons Exit
82	1	0	0	0	0	0	1	182
820 - Shopping Center								520 - Elementary School
Persons Exit	PAF	UIPTC	Unconstrained Demand	==>>> BALANCED ==>>>	Unconstrained Demand	UIPTC	PAF	Persons Entry
89	1	0	0	0	0	0	1	49
Persons Entry	PAF	UIPTC	Unconstrained Demand	<<<== BALANCED <<<==	Unconstrained Demand	UIPTC	PAF	Persons Exit
82	1	0	0	0	0	0	1	60
820(1) - Shopping Center								820(2) - Shopping Center
Persons Exit	PAF	UIPTC	Unconstrained Demand	==>>> BALANCED ==>>>	Unconstrained Demand	UIPTC	PAF	Persons Entry
578	1	0	0	0	0	0	1	168

Persons Entry	PAF	UIPTC	Unconstrained Demand	**<<<== BALANCED <<<==**	Unconstrained Demand	UIPTC	PAF	Persons Exit
533	1	0	0	**0**	0	0	1	182
820(1) - Shopping Center								820(3) - Shopping Center
Persons Exit	PAF	UIPTC	Unconstrained Demand	**==>>> BALANCED ==>>>**	Unconstrained Demand	UIPTC	PAF	Persons Entry
578	1	0	0	**0**	0	0	1	168
Persons Entry	PAF	UIPTC	Unconstrained Demand	**<<<== BALANCED <<<==**	Unconstrained Demand	UIPTC	PAF	Persons Exit
533	1	0	0	**0**	0	0	1	182
820(1) - Shopping Center								520 - Elementary School
Persons Exit	PAF	UIPTC	Unconstrained Demand	**==>>> BALANCED ==>>>**	Unconstrained Demand	UIPTC	PAF	Persons Entry
578	1	0	0	**0**	0	0	1	49
Persons Entry	PAF	UIPTC	Unconstrained Demand	**<<<== BALANCED <<<==**	Unconstrained Demand	UIPTC	PAF	Persons Exit
533	1	0	0	**0**	0	0	1	60
820(2) - Shopping Center								820(3) - Shopping Center
Persons Exit	PAF	UIPTC	Unconstrained Demand	**==>>> BALANCED ==>>>**	Unconstrained Demand	UIPTC	PAF	Persons Entry
182	1	0	0	**0**	0	0	1	168
Persons Entry	PAF	UIPTC	Unconstrained Demand	**<<<== BALANCED <<<==**	Unconstrained Demand	UIPTC	PAF	Persons Exit
168	1	0	0	**0**	0	0	1	182
820(2) - Shopping Center								520 - Elementary School
Persons Exit	PAF	UIPTC	Unconstrained Demand	**==>>> BALANCED ==>>>**	Unconstrained Demand	UIPTC	PAF	Persons Entry
182	1	0	0	**0**	0	0	1	49
Persons Entry	PAF	UIPTC	Unconstrained Demand	**<<<== BALANCED <<<==**	Unconstrained Demand	UIPTC	PAF	Persons Exit
168	1	0	0	**0**	0	0	1	60
820(3) - Shopping Center								520 - Elementary School
Persons Exit	PAF	UIPTC	Unconstrained Demand	**==>>> BALANCED ==>>>**	Unconstrained Demand	UIPTC	PAF	Persons Entry
182	1	0	0	**0**	0	0	1	49
Persons Entry	PAF	UIPTC	Unconstrained Demand	**<<<== BALANCED <<<==**	Unconstrained Demand	UIPTC	PAF	Persons Exit
168	1	0	0	**0**	0	0	1	60

INTERNAL PERSON TRIPS:

210 - Single-Family Detached Housing

Internal Person Trips From	Entry	Exit	Total
210(1) - Single-Family Detached Housing	0	0	0
210(2) - Single-Family Detached Housing	0	0	0
210(3) - Single-Family Detached Housing	0	0	0
210(4) - Single-Family Detached Housing	0	0	0
210(5) - Single-Family Detached Housing	0	0	0
210(6) - Single-Family Detached Housing	0	0	0
210(7) - Single-Family Detached Housing	0	0	0
220 - Multifamily Housing (Low-Rise)	0	0	0
220(1) - Multifamily Housing (Low-Rise)	0	0	0
820 - Shopping Center	1	0	1
820(1) - Shopping Center	1	1	2
820(2) - Shopping Center	1	0	1
820(3) - Shopping Center	1	0	1
520 - Elementary School	0	0	0
Total Internal Person Trips	**4**	**1**	**5**

210(1) - Single-Family Detached Housing

Internal Person Trips From	Entry	Exit	Total
210 - Single-Family Detached Housing	0	0	0

210(2) - Single-Family Detached Housing	0	0	0
210(3) - Single-Family Detached Housing	0	0	0
210(4) - Single-Family Detached Housing	0	0	0
210(5) - Single-Family Detached Housing	0	0	0
210(6) - Single-Family Detached Housing	0	0	0
210(7) - Single-Family Detached Housing	0	0	0
220 - Multifamily Housing (Low-Rise)	0	0	0
220(1) - Multifamily Housing (Low-Rise)	0	0	0
820 - Shopping Center	1	0	1
820(1) - Shopping Center	1	1	2
820(2) - Shopping Center	1	0	1
820(3) - Shopping Center	1	0	1
520 - Elementary School	0	0	0
Total Internal Person Trips	**4**	**1**	**5**

210(2) - Single-Family Detached Housing

Internal Person Trips From	Entry	Exit	Total
210 - Single-Family Detached Housing	0	0	0
210(1) - Single-Family Detached Housing	0	0	0
210(3) - Single-Family Detached Housing	0	0	0
210(4) - Single-Family Detached Housing	0	0	0
210(5) - Single-Family Detached Housing	0	0	0
210(6) - Single-Family Detached Housing	0	0	0
210(7) - Single-Family Detached Housing	0	0	0
220 - Multifamily Housing (Low-Rise)	0	0	0
220(1) - Multifamily Housing (Low-Rise)	0	0	0
820 - Shopping Center	0	0	1
820(1) - Shopping Center	0	0	1
820(2) - Shopping Center	0	0	1
820(3) - Shopping Center	0	0	1
520 - Elementary School	0	0	0
Total Internal Person Trips	**0**	**0**	**0**

210(3) - Single-Family Detached Housing

Internal Person Trips From	Entry	Exit	Total
210 - Single-Family Detached Housing	0	0	0
210(1) - Single-Family Detached Housing	0	0	0
210(2) - Single-Family Detached Housing	0	0	0
210(4) - Single-Family Detached Housing	0	0	0
210(5) - Single-Family Detached Housing	0	0	0
210(6) - Single-Family Detached Housing	0	0	0
210(7) - Single-Family Detached Housing	0	0	0
220 - Multifamily Housing (Low-Rise)	0	0	0
220(1) - Multifamily Housing (Low-Rise)	0	0	0
820 - Shopping Center	1	0	1
820(1) - Shopping Center	1	0	1
820(2) - Shopping Center	1	0	1
820(3) - Shopping Center	1	0	1
520 - Elementary School	0	0	0
Total Internal Person Trips	**4**	**0**	**4**

210(4) - Single-Family Detached Housing

Internal Person Trips From	Entry	Exit	Total
210 - Single-Family Detached Housing	0	0	0
210(1) - Single-Family Detached Housing	0	0	0
210(2) - Single-Family Detached Housing	0	0	0

210(3) - Single-Family Detached Housing	0	0	0
210(5) - Single-Family Detached Housing	0	0	0
210(6) - Single-Family Detached Housing	0	0	0
210(7) - Single-Family Detached Housing	0	0	0
220 - Multifamily Housing (Low-Rise)	0	0	0
220(1) - Multifamily Housing (Low-Rise)	0	0	0
820 - Shopping Center	1	0	1
820(1) - Shopping Center	1	0	1
820(2) - Shopping Center	1	0	1
820(3) - Shopping Center	1	0	1
520 - Elementary School	0	0	0
Total Internal Person Trips	**4**	**0**	**4**

210(5) - Single-Family Detached Housing

Internal Person Trips From	Entry	Exit	Total
210 - Single-Family Detached Housing	0	0	0
210(1) - Single-Family Detached Housing	0	0	0
210(2) - Single-Family Detached Housing	0	0	0
210(3) - Single-Family Detached Housing	0	0	0
210(4) - Single-Family Detached Housing	0	0	0
210(6) - Single-Family Detached Housing	0	0	0
210(7) - Single-Family Detached Housing	0	0	0
220 - Multifamily Housing (Low-Rise)	0	0	0
220(1) - Multifamily Housing (Low-Rise)	0	0	0
820 - Shopping Center	1	0	1
820(1) - Shopping Center	1	0	1
820(2) - Shopping Center	1	0	1
820(3) - Shopping Center	1	0	1
520 - Elementary School	0	0	0
Total Internal Person Trips	**4**	**0**	**4**

210(6) - Single-Family Detached Housing

Internal Person Trips From	Entry	Exit	Total
210 - Single-Family Detached Housing	0	0	0
210(1) - Single-Family Detached Housing	0	0	0
210(2) - Single-Family Detached Housing	0	0	0
210(3) - Single-Family Detached Housing	0	0	0
210(4) - Single-Family Detached Housing	0	0	0
210(5) - Single-Family Detached Housing	0	0	0
210(7) - Single-Family Detached Housing	0	0	0
220 - Multifamily Housing (Low-Rise)	0	0	0
220(1) - Multifamily Housing (Low-Rise)	0	0	0
820 - Shopping Center	1	0	1
820(1) - Shopping Center	1	1	2
820(2) - Shopping Center	1	0	2
820(3) - Shopping Center	1	0	2
520 - Elementary School	0	0	0
Total Internal Person Trips	**4**	**1**	**5**

210(7) - Single-Family Detached Housing

Internal Person Trips From	Entry	Exit	Total
210 - Single-Family Detached Housing	0	0	0
210(1) - Single-Family Detached Housing	0	0	0
210(2) - Single-Family Detached Housing	0	0	0
210(3) - Single-Family Detached Housing	0	0	0
210(4) - Single-Family Detached Housing	0	0	0

210(5) - Single-Family Detached Housing	0	0	0
210(6) - Single-Family Detached Housing	0	0	0
220 - Multifamily Housing (Low-Rise)	0	0	0
220(1) - Multifamily Housing (Low-Rise)	0	0	0
820 - Shopping Center	0	0	0
820(1) - Shopping Center	0	0	0
820(2) - Shopping Center	0	0	0
820(3) - Shopping Center	0	0	0
520 - Elementary School	0	0	0
Total Internal Person Trips	**0**	**0**	**0**

220 - Multifamily Housing (Low-Rise)

Internal Person Trips From	Entry	Exit	Total
210 - Single-Family Detached Housing	0	0	0
210(1) - Single-Family Detached Housing	0	0	0
210(2) - Single-Family Detached Housing	0	0	0
210(3) - Single-Family Detached Housing	0	0	0
210(4) - Single-Family Detached Housing	0	0	0
210(5) - Single-Family Detached Housing	0	0	0
210(6) - Single-Family Detached Housing	0	0	0
210(7) - Single-Family Detached Housing	0	0	0
220(1) - Multifamily Housing (Low-Rise)	0	0	0
820 - Shopping Center	1	0	1
820(1) - Shopping Center	1	0	1
820(2) - Shopping Center	1	0	1
820(3) - Shopping Center	1	0	1
520 - Elementary School	0	0	0
Total Internal Person Trips	**4**	**0**	**4**

220(1) - Multifamily Housing (Low-Rise)

Internal Person Trips From	Entry	Exit	Total
210 - Single-Family Detached Housing	0	0	0
210(1) - Single-Family Detached Housing	0	0	0
210(2) - Single-Family Detached Housing	0	0	0
210(3) - Single-Family Detached Housing	0	0	0
210(4) - Single-Family Detached Housing	0	0	0
210(5) - Single-Family Detached Housing	0	0	0
210(6) - Single-Family Detached Housing	0	0	0
210(7) - Single-Family Detached Housing	0	0	0
220 - Multifamily Housing (Low-Rise)	0	0	0
820 - Shopping Center	1	0	1
820(1) - Shopping Center	1	0	1
820(2) - Shopping Center	1	0	1
820(3) - Shopping Center	1	0	1
520 - Elementary School	0	0	0
Total Internal Person Trips	**4**	**0**	**4**

820 - Shopping Center

Internal Person Trips From	Entry	Exit	Total
210 - Single-Family Detached Housing	0	1	1
210(1) - Single-Family Detached Housing	0	1	1
210(2) - Single-Family Detached Housing	0	0	1
210(3) - Single-Family Detached Housing	0	1	1
210(4) - Single-Family Detached Housing	0	1	1
210(5) - Single-Family Detached Housing	0	1	1
210(6) - Single-Family Detached Housing	0	1	1

210(7) - Single-Family Detached Housing	0	0	0
220 - Multifamily Housing (Low-Rise)	0	1	1
220(1) - Multifamily Housing (Low-Rise)	0	1	1
820(1) - Shopping Center	0	0	0
820(2) - Shopping Center	0	0	0
820(3) - Shopping Center	0	0	0
520 - Elementary School	0	0	0
Total Internal Person Trips	**0**	**8**	**8**

820(1) - Shopping Center

Internal Person Trips From	Entry	Exit	Total
210 - Single-Family Detached Housing	1	1	2
210(1) - Single-Family Detached Housing	1	1	2
210(2) - Single-Family Detached Housing	0	0	1
210(3) - Single-Family Detached Housing	0	1	1
210(4) - Single-Family Detached Housing	0	1	1
210(5) - Single-Family Detached Housing	0	1	1
210(6) - Single-Family Detached Housing	1	1	2
210(7) - Single-Family Detached Housing	0	0	0
220 - Multifamily Housing (Low-Rise)	0	1	1
220(1) - Multifamily Housing (Low-Rise)	0	1	1
820 - Shopping Center	0	0	0
820(2) - Shopping Center	0	0	0
820(3) - Shopping Center	0	0	0
520 - Elementary School	0	0	0
Total Internal Person Trips	**3**	**8**	**11**

820(2) - Shopping Center

Internal Person Trips From	Entry	Exit	Total
210 - Single-Family Detached Housing	0	1	1
210(1) - Single-Family Detached Housing	0	1	1
210(2) - Single-Family Detached Housing	0	0	1
210(3) - Single-Family Detached Housing	0	1	1
210(4) - Single-Family Detached Housing	0	1	1
210(5) - Single-Family Detached Housing	0	1	1
210(6) - Single-Family Detached Housing	0	1	2
210(7) - Single-Family Detached Housing	0	0	0
220 - Multifamily Housing (Low-Rise)	0	1	1
220(1) - Multifamily Housing (Low-Rise)	0	1	1
820 - Shopping Center	0	0	0
820(1) - Shopping Center	0	0	0
820(3) - Shopping Center	0	0	0
520 - Elementary School	0	0	0
Total Internal Person Trips	**0**	**8**	**8**

820(3) - Shopping Center

Internal Person Trips From	Entry	Exit	Total
210 - Single-Family Detached Housing	0	1	1
210(1) - Single-Family Detached Housing	0	1	1
210(2) - Single-Family Detached Housing	0	0	1
210(3) - Single-Family Detached Housing	0	1	1
210(4) - Single-Family Detached Housing	0	1	1
210(5) - Single-Family Detached Housing	0	1	1
210(6) - Single-Family Detached Housing	0	1	2
210(7) - Single-Family Detached Housing	0	0	0
220 - Multifamily Housing (Low-Rise)	0	1	1

220(1) - Multifamily Housing (Low-Rise)	0	1	1
820 - Shopping Center	0	0	0
820(1) - Shopping Center	0	0	0
820(2) - Shopping Center	0	0	0
520 - Elementary School	0	0	0
Total Internal Person Trips	**0**	**8**	**8**

520 - Elementary School

Internal Person Trips From	Entry	Exit	Total
210 - Single-Family Detached Housing	0	0	0
210(1) - Single-Family Detached Housing	0	0	0
210(2) - Single-Family Detached Housing	0	0	0
210(3) - Single-Family Detached Housing	0	0	0
210(4) - Single-Family Detached Housing	0	0	0
210(5) - Single-Family Detached Housing	0	0	0
210(6) - Single-Family Detached Housing	0	0	0
210(7) - Single-Family Detached Housing	0	0	0
220 - Multifamily Housing (Low-Rise)	0	0	0
220(1) - Multifamily Housing (Low-Rise)	0	0	0
820 - Shopping Center	0	0	0
820(1) - Shopping Center	0	0	0
820(2) - Shopping Center	0	0	0
820(3) - Shopping Center	0	0	0
Total Internal Person Trips	**0**	**0**	**0**

INTERNAL VEHICLE TRIPS AND CAPTURE:
210 - Single-Family Detached Housing

Total Internal Person Trips	4	1	5
Vehicle Mode Share	100%	100%	-
Vehicle Occupancy	1.00	1.00	-
Total Vehicle Internal Trips	**4**	**1**	**5**
Total External Vehicle Trips	81	49	130
Internal Vehicle Trip Capture	**5%**	**2%**	**4%**

210(1) - Single-Family Detached Housing

Total Internal Person Trips	4	1	5
Vehicle Mode Share	100%	100%	-
Vehicle Occupancy	1.00	1.00	-
Total Vehicle Internal Trips	**4**	**1**	**5**
Total External Vehicle Trips	84	51	135
Internal Vehicle Trip Capture	**5%**	**2%**	**4%**

210(2) - Single-Family Detached Housing

Total Internal Person Trips	0	0	0
Vehicle Mode Share	100%	100%	-
Vehicle Occupancy	1.00	1.00	-
Total Vehicle Internal Trips	**0**	**0**	**0**
Total External Vehicle Trips	35	20	55
Internal Vehicle Trip Capture	**0%**	**0%**	**0%**

210(3) - Single-Family Detached Housing

Total Internal Person Trips	4	0	4

Vehicle Mode Share	100%	100%	-
Vehicle Occupancy	1.00	1.00	-
Total Vehicle Internal Trips	**4**	**0**	**4**
Total External Vehicle Trips	72	45	117
Internal Vehicle Trip Capture	**5%**	**0%**	**3%**

210(4) - Single-Family Detached Housing

Total Internal Person Trips	4	0	4
Vehicle Mode Share	100%	100%	-
Vehicle Occupancy	1.00	1.00	-
Total Vehicle Internal Trips	**4**	**0**	**4**
Total External Vehicle Trips	70	44	114
Internal Vehicle Trip Capture	**5%**	**0%**	**3%**

210(5) - Single-Family Detached Housing

Total Internal Person Trips	4	0	4
Vehicle Mode Share	100%	100%	-
Vehicle Occupancy	1.00	1.00	-
Total Vehicle Internal Trips	**4**	**0**	**4**
Total External Vehicle Trips	61	38	99
Internal Vehicle Trip Capture	**6%**	**0%**	**4%**

210(6) - Single-Family Detached Housing

Total Internal Person Trips	4	1	5
Vehicle Mode Share	100%	100%	-
Vehicle Occupancy	1.00	1.00	-
Total Vehicle Internal Trips	**4**	**1**	**5**
Total External Vehicle Trips	116	70	186
Internal Vehicle Trip Capture	**3%**	**1%**	**3%**

210(7) - Single-Family Detached Housing

Total Internal Person Trips	0	0	0
Vehicle Mode Share	100%	100%	-
Vehicle Occupancy	1.00	1.00	-
Total Vehicle Internal Trips	**0**	**0**	**0**
Total External Vehicle Trips	0	0	0
Internal Vehicle Trip Capture	**0%**	**0%**	**0%**

220 - Multifamily Housing (Low-Rise)

Total Internal Person Trips	4	0	4
Vehicle Mode Share	100%	100%	-
Vehicle Occupancy	1.00	1.00	-
Total Vehicle Internal Trips	**4**	**0**	**4**
Total External Vehicle Trips	46	29	75
Internal Vehicle Trip Capture	**8%**	**0%**	**5%**

220(1) - Multifamily Housing (Low-Rise)

Total Internal Person Trips	4	0	4
Vehicle Mode Share	100%	100%	-
Vehicle Occupancy	1.00	1.00	-

Total Vehicle Internal Trips	**4**	**0**	**4**
Total External Vehicle Trips	59	37	96
Internal Vehicle Trip Capture	**6%**	**0%**	**4%**

820 - Shopping Center

Total Internal Person Trips	0	8	8
Vehicle Mode Share	100%	100%	-
Vehicle Occupancy	1.00	1.00	-
Total Vehicle Internal Trips	**0**	**8**	**8**
Total External Vehicle Trips	82	81	163
Internal Vehicle Trip Capture	**0%**	**9%**	**5%**

820(1) - Shopping Center

Total Internal Person Trips	3	8	11
Vehicle Mode Share	100%	100%	-
Vehicle Occupancy	1.00	1.00	-
Total Vehicle Internal Trips	**3**	**8**	**11**
Total External Vehicle Trips	530	570	1100
Internal Vehicle Trip Capture	**1%**	**1%**	**1%**

820(2) - Shopping Center

Total Internal Person Trips	0	8	8
Vehicle Mode Share	100%	100%	-
Vehicle Occupancy	1.00	1.00	-
Total Vehicle Internal Trips	**0**	**8**	**8**
Total External Vehicle Trips	168	174	342
Internal Vehicle Trip Capture	**0%**	**4%**	**2%**

820(3) - Shopping Center

Total Internal Person Trips	0	8	8
Vehicle Mode Share	100%	100%	-
Vehicle Occupancy	1.00	1.00	-
Total Vehicle Internal Trips	**0**	**8**	**8**
Total External Vehicle Trips	168	174	342
Internal Vehicle Trip Capture	**0%**	**4%**	**2%**

520 - Elementary School

Total Internal Person Trips	0	0	0
Vehicle Mode Share	100%	100%	-
Vehicle Occupancy	1.00	1.00	-
Total Vehicle Internal Trips	**0**	**0**	**0**
Total External Vehicle Trips	49	60	109
Internal Vehicle Trip Capture	**0%**	**0%**	**0%**

PASS-BY VEHICLE TRIP REDUCTION

Land Use	External Vehicle Trips		Pass-by Vehicle Trip %		Pass-by Vehicle Trips	
	Entry	Exit	Entry (%)	Exit (%)	Entry	Exit
210 - Single-Family Detached Housing	81	49	0.00%	0.00%	0	0
210(1) - Single-Family Detached Housing	84	51	0.00%	0.00%	0	0

210(2) - Single-Family Detached Housing	35	20	0.00%	0.00%	0	0
210(3) - Single-Family Detached Housing	72	45	0.00%	0.00%	0	0
210(4) - Single-Family Detached Housing	70	44	0.00%	0.00%	0	0
210(5) - Single-Family Detached Housing	61	38	0.00%	0.00%	0	0
210(6) - Single-Family Detached Housing	116	70	0.00%	0.00%	0	0
210(7) - Single-Family Detached Housing	0	0	0.00%	0.00%	0	0
220 - Multifamily Housing (Low-Rise)	46	29	0.00%	0.00%	0	0
220(1) - Multifamily Housing (Low-Rise)	59	37	0.00%	0.00%	0	0
820 - Shopping Center	82	81	34.00%	34.00%	28	28
820(1) - Shopping Center	530	570	34.00%	34.00%	180	194
820(2) - Shopping Center	168	174	34.00%	34.00%	57	59
820(3) - Shopping Center	168	174	34.00%	34.00%	57	59
520 - Elementary School	49	60	0.00%	0.00%	0	0

DIVERTED VEHICLE TRIP REDUCTION

Land Use	External Vehicle Trips		Diverted Vehicle Trip %		Diverted Vehicle Trips	
	Entry	Exit	Entry (%)	Exit (%)	Entry	Exit
210 - Single-Family Detached Housing	81	49	0.00%	0.00%	0	0
210(1) - Single-Family Detached Housing	84	51	0.00%	0.00%	0	0
210(2) - Single-Family Detached Housing	35	20	0.00%	0.00%	0	0
210(3) - Single-Family Detached Housing	72	45	0.00%	0.00%	0	0
210(4) - Single-Family Detached Housing	70	44	0.00%	0.00%	0	0
210(5) - Single-Family Detached Housing	61	38	0.00%	0.00%	0	0
210(6) - Single-Family Detached Housing	116	70	0.00%	0.00%	0	0
210(7) - Single-Family Detached Housing	0	0	0.00%	0.00%	0	0
220 - Multifamily Housing (Low-Rise)	46	29	0.00%	0.00%	0	0
220(1) - Multifamily Housing (Low-Rise)	59	37	0.00%	0.00%	0	0
820 - Shopping Center	82	81	26.50%	26.50%	22	21
820(1) - Shopping Center	530	570	26.50%	26.50%	140	151
820(2) - Shopping Center	168	174	26.50%	26.50%	45	46
820(3) - Shopping Center	168	174	26.50%	26.50%	45	46
520 - Elementary School	49	60	0.00%	0.00%	0	0

EXTRA VEHICLE TRIP REDUCTION

Land Use	(External - (Pass-by + Diverted)) Vehicle Trips		Extra Vehicle Trip Reduction %		Extra Reduced Vehicle Trips	
	Entry	Exit	Entry (%)	Exit (%)	Entry	Exit
210 - Single-Family Detached Housing	81	49	0.00%	0.00%	0	0
210(1) - Single-Family Detached Housing	84	51	0.00%	0.00%	0	0
210(2) - Single-Family Detached Housing	35	20	0.00%	0.00%	0	0
210(3) - Single-Family Detached Housing	72	45	0.00%	0.00%	0	0
210(4) - Single-Family Detached Housing	70	44	0.00%	0.00%	0	0
210(5) - Single-Family Detached Housing	61	38	0.00%	0.00%	0	0
210(6) - Single-Family Detached Housing	116	70	0.00%	0.00%	0	0
210(7) - Single-Family Detached Housing	0	0	0.00%	0.00%	0	0
220 - Multifamily Housing (Low-Rise)	46	29	0.00%	0.00%	0	0
220(1) - Multifamily Housing (Low-Rise)	59	37	0.00%	0.00%	0	0
820 - Shopping Center	32	32	0.00%	0.00%	0	0
820(1) - Shopping Center	210	225	0.00%	0.00%	0	0
820(2) - Shopping Center	66	69	0.00%	0.00%	0	0
820(3) - Shopping Center	66	69	0.00%	0.00%	0	0
520 - Elementary School	49	60	0.00%	0.00%	0	0

NEW VEHICLE TRIPS

Land Use	New Vehicle Trips		
	Entry	Exit	Total
210 - Single-Family Detached Housing	81	49	130
210(1) - Single-Family Detached Housing	84	51	135
210(2) - Single-Family Detached Housing	35	20	55
210(3) - Single-Family Detached Housing	72	45	117
210(4) - Single-Family Detached Housing	70	44	114
210(5) - Single-Family Detached Housing	61	38	99
210(6) - Single-Family Detached Housing	116	70	186
210(7) - Single-Family Detached Housing	0	0	0
220 - Multifamily Housing (Low-Rise)	46	29	75
220(1) - Multifamily Housing (Low-Rise)	59	37	96
820 - Shopping Center	32	32	64
820(1) - Shopping Center	210	225	435
820(2) - Shopping Center	66	69	135
820(3) - Shopping Center	66	69	135
520 - Elementary School	49	60	109

Land Use	New Vehicle Trips (PPV)		
	Entry	Exit	Total
210 - Single-Family Detached Housing	81	49	130
210(1) - Single-Family Detached Housing	84	51	135
210(2) - Single-Family Detached Housing	35	20	55
210(3) - Single-Family Detached Housing	72	45	117
210(4) - Single-Family Detached Housing	70	44	114
210(5) - Single-Family Detached Housing	61	38	99
210(6) - Single-Family Detached Housing	116	70	186
210(7) - Single-Family Detached Housing	0	0	0
220 - Multifamily Housing (Low-Rise)	46	29	75
220(1) - Multifamily Housing (Low-Rise)	59	37	96
820 - Shopping Center	32	32	64
820(1) - Shopping Center	210	225	435
820(2) - Shopping Center	66	69	135
820(3) - Shopping Center	66	69	135
520 - Elementary School	49	60	109

Land Use	New Vehicle Trips (Truck)		
	Entry	Exit	Total
210 - Single-Family Detached Housing	0	0	0
210(1) - Single-Family Detached Housing	0	0	0
210(2) - Single-Family Detached Housing	0	0	0
210(3) - Single-Family Detached Housing	0	0	0
210(4) - Single-Family Detached Housing	0	0	0
210(5) - Single-Family Detached Housing	0	0	0
210(6) - Single-Family Detached Housing	0	0	0
210(7) - Single-Family Detached Housing	0	0	0
220 - Multifamily Housing (Low-Rise)	0	0	0
220(1) - Multifamily Housing (Low-Rise)	0	0	0
820 - Shopping Center	0	0	0
820(1) - Shopping Center	0	0	0
820(2) - Shopping Center	0	0	0
820(3) - Shopping Center	0	0	0
520 - Elementary School	0	0	0

RESULTS

Site Totals	Entry	Exit	Total
Vehicle Trips Before Reduction	1656	1477	3133
Vehicle Trips After Multi-modal Adjustment	1656	1477	3133
Internal Vehicle Trips	35	35	70
External Vehicle Trips	1621	1442	3063
Internal Vehicle Trip Capture	2%	2%	2%
Pass-by Vehicle Trips	322	340	662
Diverted Vehicle Trips	252	264	516
Extra Reduced Vehicle Trips	0	0	0
New Vehicle Trips	1047	838	1885
PPV	1047	838	1885
Truck	0	0	0
Person Trips by Other Modes	0	0	0

Scenario - 3

Scenario Name: Weekday

User Group:

Dev. phase: 1

No. of Years to Project Traffic : 0

Analyst Note:

Warning:

VEHICLE TRIPS BEFORE REDUCTION

Land Use & Data Source	Location	IV	Size	Time Period	Method Rate/Equation	Entry Split%	Exit Split%	Total
210 - Single-Family Detached Housing	General Urban/Suburban	Dwelling Units	135	Weekday	Best Fit (LOG)	685	685	1370
Data Source: Trip Gen Manual, 10th Ed					Ln(T) =0.92Ln(X) + 2.71	50%	50%	
210(1) - Single-Family Detached Housing	General Urban/Suburban	Dwelling Units	140	Weekday	Best Fit (LOG)	709	709	1418
Data Source: Trip Gen Manual, 10th Ed					Ln(T) =0.92Ln(X) + 2.71	50%	50%	
210(2) - Single-Family Detached Housing	General Urban/Suburban	Dwelling Units	53	Weekday	Best Fit (LOG)	290	290	580
Data Source: Trip Gen Manual, 10th Ed					Ln(T) =0.92Ln(X) + 2.71	50%	50%	
210(3) - Single-Family Detached Housing	General Urban/Suburban	Dwelling Units	120	Weekday	Best Fit (LOG)	615	615	1230
Data Source: Trip Gen Manual, 10th Ed					Ln(T) =0.92Ln(X) + 2.71	50%	50%	
210(4) - Single-Family Detached Housing	General Urban/Suburban	Dwelling Units	117	Weekday	Best Fit (LOG)	601	601	1202
Data Source: Trip Gen Manual, 10th Ed					Ln(T) =0.92Ln(X) + 2.71	50%	50%	
210(5) - Single-Family Detached Housing	General Urban/Suburban	Dwelling Units	102	Weekday	Best Fit (LOG)	529	529	1058
Data Source: Trip Gen Manual, 10th Ed					Ln(T) =0.92Ln(X) + 2.71	50%	50%	
210(6) - Single-Family Detached Housing	General Urban/Suburban	Dwelling Units	193	Weekday	Best Fit (LOG)	952	952	1904
Data Source: Trip Gen Manual, 10th Ed					Ln(T) =0.92Ln(X) + 2.71	50%	50%	
210(7) - Single-Family Detached Housing	General Urban/Suburban	Dwelling Units	0	Weekday	Best Fit (LOG)	0	0	0
Data Source: Trip Gen Manual, 10th Ed					Ln(T) =0.92Ln(X) + 2.71	50%	50%	
220 - Multifamily Housing (Low-Rise)	General Urban/Suburban	Dwelling Units	140	Weekday	Best Fit (LIN)	509	509	1018
Data Source: Trip Gen Manual, 10th Ed					T = 7.56(X) - 40.86	50%	50%	
220(1) - Multifamily Housing (Low-Rise)	General Urban/Suburban	Dwelling Units	180	Weekday	Best Fit (LIN)	660	660	1320
Data Source: Trip Gen Manual, 10th Ed					T = 7.56(X) - 40.86	50%	50%	
820 - Shopping Center	General Urban/Suburban	1000 Sq. Ft. GLA	21	Weekday	Best Fit (LOG)	1040	1040	2080
Data Source: Trip Gen Manual, 10th Ed					Ln(T) =0.68Ln(X) + 5.57	50%	50%	
820(1) - Shopping Center	General Urban/Suburban	1000 Sq. Ft. GLA	263	Weekday	Best Fit (LOG)	5802	5802	11604
Data Source: Trip Gen Manual, 10th Ed					Ln(T) =0.68Ln(X) + 5.57	50%	50%	
820(2) - Shopping Center	General Urban/Suburban	1000 Sq. Ft. GLA	55	Weekday	Best Fit (LOG)	2002	2002	4004
Data Source: Trip Gen Manual, 10th Ed					Ln(T) =0.68Ln(X) + 5.57	50%	50%	
820(3) - Shopping Center	General Urban/Suburban	1000 Sq. Ft. GLA	55	Weekday	Best Fit (LOG)	2002	2002	4004
Data Source: Trip Gen Manual, 10th Ed					Ln(T) =0.68Ln(X) + 5.57	50%	50%	
520 - Elementary School	General Urban/Suburban	1000 Sq. Ft. GFA	79	Weekday	Average	771	771	1542
Data Source: Trip Gen Manual, 10th Ed					19.52	50%	50%	

VEHICLE TO PERSON TRIP CONVERSION

BASELINE SITE VEHICLE CHARACTERISTICS:

Land Use	Baseline Site Vehicle Mode Share		Baseline Site Vehicle Occupancy		Baseline Site Vehicle Directional Split	
	Entry (%)	Exit (%)	Entry	Exit	Entry (%)	Exit (%)
210 - Single-Family Detached Housing	100	100	1	1	50	50
210(1) - Single-Family Detached Housing	100	100	1	1	50	50
210(2) - Single-Family Detached Housing	100	100	1	1	50	50
210(3) - Single-Family Detached Housing	100	100	1	1	50	50
210(4) - Single-Family Detached Housing	100	100	1	1	50	50

210(5) - Single-Family Detached Housing	100	100	1	1	50	50
210(6) - Single-Family Detached Housing	100	100	1	1	50	50
210(7) - Single-Family Detached Housing	100	100	1	1	50	50
220 - Multifamily Housing (Low-Rise)	100	100	1	1	50	50
220(1) - Multifamily Housing (Low-Rise)	100	100	1	1	50	50
820 - Shopping Center	100	100	1	1	50	50
820(1) - Shopping Center	100	100	1	1	50	50
820(2) - Shopping Center	100	100	1	1	50	50
820(3) - Shopping Center	100	100	1	1	50	50
520 - Elementary School	100	100	1	1	50	50

ESTIMATED BASELINE SITE PERSON TRIPS:

Land Use	Person Trips by Vehicle		Person Trips by Other Modes		Total Baseline Site Person Trips	
	Entry	Exit	Entry	Exit	Entry	Exit
210 - Single-Family Detached Housing	685	685	0	0	685	685
	1370		0		1370	
210(1) - Single-Family Detached Housing	709	709	0	0	709	709
	1418		0		1418	
210(2) - Single-Family Detached Housing	290	290	0	0	290	290
	580		0		580	
210(3) - Single-Family Detached Housing	615	615	0	0	615	615
	1230		0		1230	
210(4) - Single-Family Detached Housing	601	601	0	0	601	601
	1202		0		1202	
210(5) - Single-Family Detached Housing	529	529	0	0	529	529
	1058		0		1058	
210(6) - Single-Family Detached Housing	952	952	0	0	952	952
	1904		0		1904	
210(7) - Single-Family Detached Housing	0	0	0	0	0	0
	0		0		0	
220 - Multifamily Housing (Low-Rise)	509	509	0	0	509	509
	1018		0		1018	
220(1) - Multifamily Housing (Low-Rise)	660	660	0	0	660	660
	1320		0		1320	
820 - Shopping Center	1040	1040	0	0	1040	1040
	2080		0		2080	
820(1) - Shopping Center	5802	5802	0	0	5802	5802
	11604		0		11604	
820(2) - Shopping Center	2002	2002	0	0	2002	2002
	4004		0		4004	
820(3) - Shopping Center	2002	2002	0	0	2002	2002
	4004		0		4004	
520 - Elementary School	771	771	0	0	771	771
	1542		0		1542	

VEHICLE TRIPS AFTER MULTI-MODAL ADJUSTMENT

MODE SHARE:

Land Use	Personal Passenger Vehicle		Truck		Other Modes	
	Entry (%)	Exit (%)	Entry (%)	Exit (%)	Entry (%)	Exit (%)
210 - Single-Family Detached Housing	100%	100%	0%	0%	0%	0%
210(1) - Single-Family Detached Housing	100%	100%	0%	0%	0%	0%
210(2) - Single-Family Detached Housing	100%	100%	0%	0%	0%	0%
210(3) - Single-Family Detached Housing	100%	100%	0%	0%	0%	0%
210(4) - Single-Family Detached Housing	100%	100%	0%	0%	0%	0%

210(5) - Single-Family Detached Housing	100%	100%	0%	0%	0%	0%
210(6) - Single-Family Detached Housing	100%	100%	0%	0%	0%	0%
210(7) - Single-Family Detached Housing	100%	100%	0%	0%	0%	0%
220 - Multifamily Housing (Low-Rise)	100%	100%	0%	0%	0%	0%
220(1) - Multifamily Housing (Low-Rise)	100%	100%	0%	0%	0%	0%
820 - Shopping Center	100%	100%	0%	0%	0%	0%
820(1) - Shopping Center	100%	100%	0%	0%	0%	0%
820(2) - Shopping Center	100%	100%	0%	0%	0%	0%
820(3) - Shopping Center	100%	100%	0%	0%	0%	0%
520 - Elementary School	100%	100%	0%	0%	0%	0%

OCCUPANCY:

Land Use	Vehicle	
	Entry	Exit
210 - Single-Family Detached Housing	1.00	1.00
210(1) - Single-Family Detached Housing	1.00	1.00
210(2) - Single-Family Detached Housing	1.00	1.00
210(3) - Single-Family Detached Housing	1.00	1.00
210(4) - Single-Family Detached Housing	1.00	1.00
210(5) - Single-Family Detached Housing	1.00	1.00
210(6) - Single-Family Detached Housing	1.00	1.00
210(7) - Single-Family Detached Housing	1.00	1.00
220 - Multifamily Housing (Low-Rise)	1.00	1.00
220(1) - Multifamily Housing (Low-Rise)	1.00	1.00
820 - Shopping Center	1.00	1.00
820(1) - Shopping Center	1.00	1.00
820(2) - Shopping Center	1.00	1.00
820(3) - Shopping Center	1.00	1.00
520 - Elementary School	1.00	1.00

ADJUSTED VEHICLE TRIPS:

Land Use	Entry				Exit			
	Person Trips	Vehicle Mode Share (%)	Vehicle Occupancy	Vehical Trips	Person Trips	Vehicle Mode Share (%)	Vehicle Occupancy	Vehical Trips
210 - Single-Family Detached Housing	685	100%	1.00	685	685	100%	1.00	685
210(1) - Single-Family Detached Housing	709	100%	1.00	709	709	100%	1.00	709
210(2) - Single-Family Detached Housing	290	100%	1.00	290	290	100%	1.00	290
210(3) - Single-Family Detached Housing	615	100%	1.00	615	615	100%	1.00	615
210(4) - Single-Family Detached Housing	601	100%	1.00	601	601	100%	1.00	601
210(5) - Single-Family Detached Housing	529	100%	1.00	529	529	100%	1.00	529
210(6) - Single-Family Detached Housing	952	100%	1.00	952	952	100%	1.00	952
210(7) - Single-Family Detached Housing	0	100%	1.00	0	0	100%	1.00	0
220 - Multifamily Housing (Low-Rise)	509	100%	1.00	509	509	100%	1.00	509
220(1) - Multifamily Housing (Low-Rise)	660	100%	1.00	660	660	100%	1.00	660
820 - Shopping Center	1040	100%	1.00	1040	1040	100%	1.00	1040
820(1) - Shopping Center	5802	100%	1.00	5802	5802	100%	1.00	5802
820(2) - Shopping Center	2002	100%	1.00	2002	2002	100%	1.00	2002
820(3) - Shopping Center	2002	100%	1.00	2002	2002	100%	1.00	2002
520 - Elementary School	771	100%	1.00	771	771	100%	1.00	771

INTERNAL VEHICLE TRIP REDUCTION

LAND USE GROUP ASSIGNMENT:

Land Use	Land Use Group
210 - Single-Family Detached Housing	Residential

210(1) - Single-Family Detached Housing	Residential
210(2) - Single-Family Detached Housing	Residential
210(3) - Single-Family Detached Housing	Residential
210(4) - Single-Family Detached Housing	Residential
210(5) - Single-Family Detached Housing	Residential
210(6) - Single-Family Detached Housing	Residential
210(7) - Single-Family Detached Housing	Residential
220 - Multifamily Housing (Low-Rise)	Residential
220(1) - Multifamily Housing (Low-Rise)	Residential
820 - Shopping Center	Retail
820(1) - Shopping Center	Retail
820(2) - Shopping Center	Retail
820(3) - Shopping Center	Retail
520 - Elementary School	Others

BALANCED PERSON TRIPS:

210 - Single-Family Detached Housing								210(1) - Single-Family Detached Housing
Persons Exit	PAF	UIPTC	Unconstrained Demand	==>>> BALANCED ==>>>	Unconstrained Demand	UIPTC	PAF	Persons Entry
685	1	0	0	**0**	0	0	1	709
Persons Entry	PAF	UIPTC	Unconstrained Demand	<<<== BALANCED <<<==	Unconstrained Demand	UIPTC	PAF	Persons Exit
685	1	0	0	**0**	0	0	1	709

210 - Single-Family Detached Housing								210(2) - Single-Family Detached Housing
Persons Exit	PAF	UIPTC	Unconstrained Demand	==>>> BALANCED ==>>>	Unconstrained Demand	UIPTC	PAF	Persons Entry
685	1	0	0	**0**	0	0	1	290
Persons Entry	PAF	UIPTC	Unconstrained Demand	<<<== BALANCED <<<==	Unconstrained Demand	UIPTC	PAF	Persons Exit
685	1	0	0	**0**	0	0	1	290

210 - Single-Family Detached Housing								210(3) - Single-Family Detached Housing
Persons Exit	PAF	UIPTC	Unconstrained Demand	==>>> BALANCED ==>>>	Unconstrained Demand	UIPTC	PAF	Persons Entry
685	1	0	0	**0**	0	0	1	615
Persons Entry	PAF	UIPTC	Unconstrained Demand	<<<== BALANCED <<<==	Unconstrained Demand	UIPTC	PAF	Persons Exit
685	1	0	0	**0**	0	0	1	615

210 - Single-Family Detached Housing								210(4) - Single-Family Detached Housing
Persons Exit	PAF	UIPTC	Unconstrained Demand	==>>> BALANCED ==>>>	Unconstrained Demand	UIPTC	PAF	Persons Entry
685	1	0	0	**0**	0	0	1	601
Persons Entry	PAF	UIPTC	Unconstrained Demand	<<<== BALANCED <<<==	Unconstrained Demand	UIPTC	PAF	Persons Exit
685	1	0	0	**0**	0	0	1	601

210 - Single-Family Detached Housing								210(5) - Single-Family Detached Housing
Persons Exit	PAF	UIPTC	Unconstrained Demand	==>>> BALANCED ==>>>	Unconstrained Demand	UIPTC	PAF	Persons Entry
685	1	0	0	**0**	0	0	1	529
Persons Entry	PAF	UIPTC	Unconstrained Demand	<<<== BALANCED <<<==	Unconstrained Demand	UIPTC	PAF	Persons Exit
685	1	0	0	**0**	0	0	1	529

210 - Single-Family Detached Housing								210(6) - Single-Family Detached Housing
Persons Exit	PAF	UIPTC	Unconstrained Demand	==>>> BALANCED ==>>>	Unconstrained Demand	UIPTC	PAF	Persons Entry
685	1	0	0	**0**	0	0	1	952
Persons Entry	PAF	UIPTC	Unconstrained Demand	<<<== BALANCED <<<==	Unconstrained Demand	UIPTC	PAF	Persons Exit
685	1	0	0	**0**	0	0	1	952

210 - Single-Family Detached Housing	210(7) - Single-Family Detached Housing

Persons Exit	PAF	UIPTC	Unconstrained Demand	==>>> BALANCED ==>>>	Unconstrained Demand	UIPTC	PAF	Persons Entry
685	1	0	0	0	0	0	1	0
Persons Entry	PAF	UIPTC	Unconstrained Demand	<<<== BALANCED <<<==	Unconstrained Demand	UIPTC	PAF	Persons Exit
685	1	0	0	0	0	0	1	0
210 - Single-Family Detached Housing								220 - Multifamily Housing (Low-Rise)
Persons Exit	PAF	UIPTC	Unconstrained Demand	==>>> BALANCED ==>>>	Unconstrained Demand	UIPTC	PAF	Persons Entry
685	1	0	0	0	0	0	1	509
Persons Entry	PAF	UIPTC	Unconstrained Demand	<<<== BALANCED <<<==	Unconstrained Demand	UIPTC	PAF	Persons Exit
685	1	0	0	0	0	0	1	509
210 - Single-Family Detached Housing								220(1) - Multifamily Housing (Low-Rise)
Persons Exit	PAF	UIPTC	Unconstrained Demand	==>>> BALANCED ==>>>	Unconstrained Demand	UIPTC	PAF	Persons Entry
685	1	0	0	0	0	0	1	660
Persons Entry	PAF	UIPTC	Unconstrained Demand	<<<== BALANCED <<<==	Unconstrained Demand	UIPTC	PAF	Persons Exit
685	1	0	0	0	0	0	1	660
210 - Single-Family Detached Housing								820 - Shopping Center
Persons Exit	PAF	UIPTC	Unconstrained Demand	==>>> BALANCED ==>>>	Unconstrained Demand	UIPTC	PAF	Persons Entry
685	1	0	0	0	0	0	1	1040
Persons Entry	PAF	UIPTC	Unconstrained Demand	<<<== BALANCED <<<==	Unconstrained Demand	UIPTC	PAF	Persons Exit
685	1	0	0	0	0	0	1	1040
210 - Single-Family Detached Housing								820(1) - Shopping Center
Persons Exit	PAF	UIPTC	Unconstrained Demand	==>>> BALANCED ==>>>	Unconstrained Demand	UIPTC	PAF	Persons Entry
685	1	0	0	0	0	0	1	5802
Persons Entry	PAF	UIPTC	Unconstrained Demand	<<<== BALANCED <<<==	Unconstrained Demand	UIPTC	PAF	Persons Exit
685	1	0	0	0	0	0	1	5802
210 - Single-Family Detached Housing								820(2) - Shopping Center
Persons Exit	PAF	UIPTC	Unconstrained Demand	==>>> BALANCED ==>>>	Unconstrained Demand	UIPTC	PAF	Persons Entry
685	1	0	0	0	0	0	1	2002
Persons Entry	PAF	UIPTC	Unconstrained Demand	<<<== BALANCED <<<==	Unconstrained Demand	UIPTC	PAF	Persons Exit
685	1	0	0	0	0	0	1	2002
210 - Single-Family Detached Housing								820(3) - Shopping Center
Persons Exit	PAF	UIPTC	Unconstrained Demand	==>>> BALANCED ==>>>	Unconstrained Demand	UIPTC	PAF	Persons Entry
685	1	0	0	0	0	0	1	2002
Persons Entry	PAF	UIPTC	Unconstrained Demand	<<<== BALANCED <<<==	Unconstrained Demand	UIPTC	PAF	Persons Exit
685	1	0	0	0	0	0	1	2002
210 - Single-Family Detached Housing								520 - Elementary School
Persons Exit	PAF	UIPTC	Unconstrained Demand	==>>> BALANCED ==>>>	Unconstrained Demand	UIPTC	PAF	Persons Entry
685	1	0	0	0	0	0	1	771
Persons Entry	PAF	UIPTC	Unconstrained Demand	<<<== BALANCED <<<==	Unconstrained Demand	UIPTC	PAF	Persons Exit
685	1	0	0	0	0	0	1	771
210(1) - Single-Family Detached Housing								210(2) - Single-Family Detached Housing
Persons Exit	PAF	UIPTC	Unconstrained Demand	==>>> BALANCED ==>>>	Unconstrained Demand	UIPTC	PAF	Persons Entry
709	1	0	0	0	0	0	1	290
Persons Entry	PAF	UIPTC	Unconstrained Demand	<<<== BALANCED <<<==	Unconstrained Demand	UIPTC	PAF	Persons Exit
709	1	0	0	0	0	0	1	290
210(1) - Single-Family Detached Housing								210(3) - Single-Family Detached Housing
Persons Exit	PAF	UIPTC	Unconstrained Demand	==>>> BALANCED ==>>>	Unconstrained Demand	UIPTC	PAF	Persons Entry
709	1	0	0	0	0	0	1	615

Persons Entry	PAF	UIPTC	Unconstrained Demand	**<<<== BALANCED <<<==**	Unconstrained Demand	UIPTC	PAF	Persons Exit
709	1	0	0	**0**	0	0	1	615
210(1) - Single-Family Detached Housing								210(4) - Single-Family Detached Housing
Persons Exit	PAF	UIPTC	Unconstrained Demand	**==>>> BALANCED ==>>>**	Unconstrained Demand	UIPTC	PAF	Persons Entry
709	1	0	0	**0**	0	0	1	601
Persons Entry	PAF	UIPTC	Unconstrained Demand	**<<<== BALANCED <<<==**	Unconstrained Demand	UIPTC	PAF	Persons Exit
709	1	0	0	**0**	0	0	1	601
210(1) - Single-Family Detached Housing								210(5) - Single-Family Detached Housing
Persons Exit	PAF	UIPTC	Unconstrained Demand	**==>>> BALANCED ==>>>**	Unconstrained Demand	UIPTC	PAF	Persons Entry
709	1	0	0	**0**	0	0	1	529
Persons Entry	PAF	UIPTC	Unconstrained Demand	**<<<== BALANCED <<<==**	Unconstrained Demand	UIPTC	PAF	Persons Exit
709	1	0	0	**0**	0	0	1	529
210(1) - Single-Family Detached Housing								210(6) - Single-Family Detached Housing
Persons Exit	PAF	UIPTC	Unconstrained Demand	**==>>> BALANCED ==>>>**	Unconstrained Demand	UIPTC	PAF	Persons Entry
709	1	0	0	**0**	0	0	1	952
Persons Entry	PAF	UIPTC	Unconstrained Demand	**<<<== BALANCED <<<==**	Unconstrained Demand	UIPTC	PAF	Persons Exit
709	1	0	0	**0**	0	0	1	952
210(1) - Single-Family Detached Housing								210(7) - Single-Family Detached Housing
Persons Exit	PAF	UIPTC	Unconstrained Demand	**==>>> BALANCED ==>>>**	Unconstrained Demand	UIPTC	PAF	Persons Entry
709	1	0	0	**0**	0	0	1	0
Persons Entry	PAF	UIPTC	Unconstrained Demand	**<<<== BALANCED <<<==**	Unconstrained Demand	UIPTC	PAF	Persons Exit
709	1	0	0	**0**	0	0	1	0
210(1) - Single-Family Detached Housing								220 - Multifamily Housing (Low-Rise)
Persons Exit	PAF	UIPTC	Unconstrained Demand	**==>>> BALANCED ==>>>**	Unconstrained Demand	UIPTC	PAF	Persons Entry
709	1	0	0	**0**	0	0	1	509
Persons Entry	PAF	UIPTC	Unconstrained Demand	**<<<== BALANCED <<<==**	Unconstrained Demand	UIPTC	PAF	Persons Exit
709	1	0	0	**0**	0	0	1	509
210(1) - Single-Family Detached Housing								220(1) - Multifamily Housing (Low-Rise)
Persons Exit	PAF	UIPTC	Unconstrained Demand	**==>>> BALANCED ==>>>**	Unconstrained Demand	UIPTC	PAF	Persons Entry
709	1	0	0	**0**	0	0	1	660
Persons Entry	PAF	UIPTC	Unconstrained Demand	**<<<== BALANCED <<<==**	Unconstrained Demand	UIPTC	PAF	Persons Exit
709	1	0	0	**0**	0	0	1	660
210(1) - Single-Family Detached Housing								820 - Shopping Center
Persons Exit	PAF	UIPTC	Unconstrained Demand	**==>>> BALANCED ==>>>**	Unconstrained Demand	UIPTC	PAF	Persons Entry
709	1	0	0	**0**	0	0	1	1040
Persons Entry	PAF	UIPTC	Unconstrained Demand	**<<<== BALANCED <<<==**	Unconstrained Demand	UIPTC	PAF	Persons Exit
709	1	0	0	**0**	0	0	1	1040
210(1) - Single-Family Detached Housing								820(1) - Shopping Center
Persons Exit	PAF	UIPTC	Unconstrained Demand	**==>>> BALANCED ==>>>**	Unconstrained Demand	UIPTC	PAF	Persons Entry
709	1	0	0	**0**	0	0	1	5802
Persons Entry	PAF	UIPTC	Unconstrained Demand	**<<<== BALANCED <<<==**	Unconstrained Demand	UIPTC	PAF	Persons Exit
709	1	0	0	**0**	0	0	1	5802
210(1) - Single-Family Detached Housing								820(2) - Shopping Center
Persons Exit	PAF	UIPTC	Unconstrained Demand	**==>>> BALANCED ==>>>**	Unconstrained Demand	UIPTC	PAF	Persons Entry
709	1	0	0	**0**	0	0	1	2002
Persons Entry	PAF	UIPTC	Unconstrained Demand	**<<<== BALANCED <<<==**	Unconstrained Demand	UIPTC	PAF	Persons Exit
709	1	0	0	**0**	0	0	1	2002

210(1) - Single-Family Detached Housing								820(3) - Shopping Center
Persons Exit	PAF	UIPTC	Unconstrained Demand	==>>> BALANCED ==>>>	Unconstrained Demand	UIPTC	PAF	Persons Entry
709	1	0	0	**0**	0	0	1	2002
Persons Entry	PAF	UIPTC	Unconstrained Demand	<<<== BALANCED <<<==	Unconstrained Demand	UIPTC	PAF	Persons Exit
709	1	0	0	**0**	0	0	1	2002

210(1) - Single-Family Detached Housing								520 - Elementary School
Persons Exit	PAF	UIPTC	Unconstrained Demand	==>>> BALANCED ==>>>	Unconstrained Demand	UIPTC	PAF	Persons Entry
709	1	0	0	**0**	0	0	1	771
Persons Entry	PAF	UIPTC	Unconstrained Demand	<<<== BALANCED <<<==	Unconstrained Demand	UIPTC	PAF	Persons Exit
709	1	0	0	**0**	0	0	1	771

210(2) - Single-Family Detached Housing								210(3) - Single-Family Detached Housing
Persons Exit	PAF	UIPTC	Unconstrained Demand	==>>> BALANCED ==>>>	Unconstrained Demand	UIPTC	PAF	Persons Entry
290	1	0	0	**0**	0	0	1	615
Persons Entry	PAF	UIPTC	Unconstrained Demand	<<<== BALANCED <<<==	Unconstrained Demand	UIPTC	PAF	Persons Exit
290	1	0	0	**0**	0	0	1	615

210(2) - Single-Family Detached Housing								210(4) - Single-Family Detached Housing
Persons Exit	PAF	UIPTC	Unconstrained Demand	==>>> BALANCED ==>>>	Unconstrained Demand	UIPTC	PAF	Persons Entry
290	1	0	0	**0**	0	0	1	601
Persons Entry	PAF	UIPTC	Unconstrained Demand	<<<== BALANCED <<<==	Unconstrained Demand	UIPTC	PAF	Persons Exit
290	1	0	0	**0**	0	0	1	601

210(2) - Single-Family Detached Housing								210(5) - Single-Family Detached Housing
Persons Exit	PAF	UIPTC	Unconstrained Demand	==>>> BALANCED ==>>>	Unconstrained Demand	UIPTC	PAF	Persons Entry
290	1	0	0	**0**	0	0	1	529
Persons Entry	PAF	UIPTC	Unconstrained Demand	<<<== BALANCED <<<==	Unconstrained Demand	UIPTC	PAF	Persons Exit
290	1	0	0	**0**	0	0	1	529

210(2) - Single-Family Detached Housing								210(6) - Single-Family Detached Housing
Persons Exit	PAF	UIPTC	Unconstrained Demand	==>>> BALANCED ==>>>	Unconstrained Demand	UIPTC	PAF	Persons Entry
290	1	0	0	**0**	0	0	1	952
Persons Entry	PAF	UIPTC	Unconstrained Demand	<<<== BALANCED <<<==	Unconstrained Demand	UIPTC	PAF	Persons Exit
290	1	0	0	**0**	0	0	1	952

210(2) - Single-Family Detached Housing								210(7) - Single-Family Detached Housing
Persons Exit	PAF	UIPTC	Unconstrained Demand	==>>> BALANCED ==>>>	Unconstrained Demand	UIPTC	PAF	Persons Entry
290	1	0	0	**0**	0	0	1	0
Persons Entry	PAF	UIPTC	Unconstrained Demand	<<<== BALANCED <<<==	Unconstrained Demand	UIPTC	PAF	Persons Exit
290	1	0	0	**0**	0	0	1	0

210(2) - Single-Family Detached Housing								220 - Multifamily Housing (Low-Rise)
Persons Exit	PAF	UIPTC	Unconstrained Demand	==>>> BALANCED ==>>>	Unconstrained Demand	UIPTC	PAF	Persons Entry
290	1	0	0	**0**	0	0	1	509
Persons Entry	PAF	UIPTC	Unconstrained Demand	<<<== BALANCED <<<==	Unconstrained Demand	UIPTC	PAF	Persons Exit
290	1	0	0	**0**	0	0	1	509

210(2) - Single-Family Detached Housing								220(1) - Multifamily Housing (Low-Rise)
Persons Exit	PAF	UIPTC	Unconstrained Demand	==>>> BALANCED ==>>>	Unconstrained Demand	UIPTC	PAF	Persons Entry
290	1	0	0	**0**	0	0	1	660
Persons Entry	PAF	UIPTC	Unconstrained Demand	<<<== BALANCED <<<==	Unconstrained Demand	UIPTC	PAF	Persons Exit
290	1	0	0	**0**	0	0	1	660

210(2) - Single-Family Detached Housing								820 - Shopping Center

Persons Exit	PAF	UIPTC	Unconstrained Demand	==>>> BALANCED ==>>>	Unconstrained Demand	UIPTC	PAF	Persons Entry
290	1	0	0	0	0	0	1	1040
Persons Entry	PAF	UIPTC	Unconstrained Demand	<<<== BALANCED <<<==	Unconstrained Demand	UIPTC	PAF	Persons Exit
290	1	0	0	0	0	0	1	1040
210(2) - Single-Family Detached Housing								820(1) - Shopping Center
Persons Exit	PAF	UIPTC	Unconstrained Demand	==>>> BALANCED ==>>>	Unconstrained Demand	UIPTC	PAF	Persons Entry
290	1	0	0	0	0	0	1	5802
Persons Entry	PAF	UIPTC	Unconstrained Demand	<<<== BALANCED <<<==	Unconstrained Demand	UIPTC	PAF	Persons Exit
290	1	0	0	0	0	0	1	5802
210(2) - Single-Family Detached Housing								820(2) - Shopping Center
Persons Exit	PAF	UIPTC	Unconstrained Demand	==>>> BALANCED ==>>>	Unconstrained Demand	UIPTC	PAF	Persons Entry
290	1	0	0	0	0	0	1	2002
Persons Entry	PAF	UIPTC	Unconstrained Demand	<<<== BALANCED <<<==	Unconstrained Demand	UIPTC	PAF	Persons Exit
290	1	0	0	0	0	0	1	2002
210(2) - Single-Family Detached Housing								820(3) - Shopping Center
Persons Exit	PAF	UIPTC	Unconstrained Demand	==>>> BALANCED ==>>>	Unconstrained Demand	UIPTC	PAF	Persons Entry
290	1	0	0	0	0	0	1	2002
Persons Entry	PAF	UIPTC	Unconstrained Demand	<<<== BALANCED <<<==	Unconstrained Demand	UIPTC	PAF	Persons Exit
290	1	0	0	0	0	0	1	2002
210(2) - Single-Family Detached Housing								520 - Elementary School
Persons Exit	PAF	UIPTC	Unconstrained Demand	==>>> BALANCED ==>>>	Unconstrained Demand	UIPTC	PAF	Persons Entry
290	1	0	0	0	0	0	1	771
Persons Entry	PAF	UIPTC	Unconstrained Demand	<<<== BALANCED <<<==	Unconstrained Demand	UIPTC	PAF	Persons Exit
290	1	0	0	0	0	0	1	771
210(3) - Single-Family Detached Housing								210(4) - Single-Family Detached Housing
Persons Exit	PAF	UIPTC	Unconstrained Demand	==>>> BALANCED ==>>>	Unconstrained Demand	UIPTC	PAF	Persons Entry
615	1	0	0	0	0	0	1	601
Persons Entry	PAF	UIPTC	Unconstrained Demand	<<<== BALANCED <<<==	Unconstrained Demand	UIPTC	PAF	Persons Exit
615	1	0	0	0	0	0	1	601
210(3) - Single-Family Detached Housing								210(5) - Single-Family Detached Housing
Persons Exit	PAF	UIPTC	Unconstrained Demand	==>>> BALANCED ==>>>	Unconstrained Demand	UIPTC	PAF	Persons Entry
615	1	0	0	0	0	0	1	529
Persons Entry	PAF	UIPTC	Unconstrained Demand	<<<== BALANCED <<<==	Unconstrained Demand	UIPTC	PAF	Persons Exit
615	1	0	0	0	0	0	1	529
210(3) - Single-Family Detached Housing								210(6) - Single-Family Detached Housing
Persons Exit	PAF	UIPTC	Unconstrained Demand	==>>> BALANCED ==>>>	Unconstrained Demand	UIPTC	PAF	Persons Entry
615	1	0	0	0	0	0	1	952
Persons Entry	PAF	UIPTC	Unconstrained Demand	<<<== BALANCED <<<==	Unconstrained Demand	UIPTC	PAF	Persons Exit
615	1	0	0	0	0	0	1	952
210(3) - Single-Family Detached Housing								210(7) - Single-Family Detached Housing
Persons Exit	PAF	UIPTC	Unconstrained Demand	==>>> BALANCED ==>>>	Unconstrained Demand	UIPTC	PAF	Persons Entry
615	1	0	0	0	0	0	1	0
Persons Entry	PAF	UIPTC	Unconstrained Demand	<<<== BALANCED <<<==	Unconstrained Demand	UIPTC	PAF	Persons Exit
615	1	0	0	0	0	0	1	0
210(3) - Single-Family Detached Housing								220 - Multifamily Housing (Low-Rise)
Persons Exit	PAF	UIPTC	Unconstrained Demand	==>>> BALANCED ==>>>	Unconstrained Demand	UIPTC	PAF	Persons Entry
615	1	0	0	0	0	0	1	509

Persons Entry	PAF	UIPTC	Unconstrained Demand	**<<<== BALANCED <<<==**	Unconstrained Demand	UIPTC	PAF	Persons Exit
615	1	0	0	**0**	0	0	1	509
210(3) - Single-Family Detached Housing								220(1) - Multifamily Housing (Low-Rise)
Persons Exit	PAF	UIPTC	Unconstrained Demand	**==>>> BALANCED ==>>>**	Unconstrained Demand	UIPTC	PAF	Persons Entry
615	1	0	0	**0**	0	0	1	660
Persons Entry	PAF	UIPTC	Unconstrained Demand	**<<<== BALANCED <<<==**	Unconstrained Demand	UIPTC	PAF	Persons Exit
615	1	0	0	**0**	0	0	1	660
210(3) - Single-Family Detached Housing								820 - Shopping Center
Persons Exit	PAF	UIPTC	Unconstrained Demand	**==>>> BALANCED ==>>>**	Unconstrained Demand	UIPTC	PAF	Persons Entry
615	1	0	0	**0**	0	0	1	1040
Persons Entry	PAF	UIPTC	Unconstrained Demand	**<<<== BALANCED <<<==**	Unconstrained Demand	UIPTC	PAF	Persons Exit
615	1	0	0	**0**	0	0	1	1040
210(3) - Single-Family Detached Housing								820(1) - Shopping Center
Persons Exit	PAF	UIPTC	Unconstrained Demand	**==>>> BALANCED ==>>>**	Unconstrained Demand	UIPTC	PAF	Persons Entry
615	1	0	0	**0**	0	0	1	5802
Persons Entry	PAF	UIPTC	Unconstrained Demand	**<<<== BALANCED <<<==**	Unconstrained Demand	UIPTC	PAF	Persons Exit
615	1	0	0	**0**	0	0	1	5802
210(3) - Single-Family Detached Housing								820(2) - Shopping Center
Persons Exit	PAF	UIPTC	Unconstrained Demand	**==>>> BALANCED ==>>>**	Unconstrained Demand	UIPTC	PAF	Persons Entry
615	1	0	0	**0**	0	0	1	2002
Persons Entry	PAF	UIPTC	Unconstrained Demand	**<<<== BALANCED <<<==**	Unconstrained Demand	UIPTC	PAF	Persons Exit
615	1	0	0	**0**	0	0	1	2002
210(3) - Single-Family Detached Housing								820(3) - Shopping Center
Persons Exit	PAF	UIPTC	Unconstrained Demand	**==>>> BALANCED ==>>>**	Unconstrained Demand	UIPTC	PAF	Persons Entry
615	1	0	0	**0**	0	0	1	2002
Persons Entry	PAF	UIPTC	Unconstrained Demand	**<<<== BALANCED <<<==**	Unconstrained Demand	UIPTC	PAF	Persons Exit
615	1	0	0	**0**	0	0	1	2002
210(3) - Single-Family Detached Housing								520 - Elementary School
Persons Exit	PAF	UIPTC	Unconstrained Demand	**==>>> BALANCED ==>>>**	Unconstrained Demand	UIPTC	PAF	Persons Entry
615	1	0	0	**0**	0	0	1	771
Persons Entry	PAF	UIPTC	Unconstrained Demand	**<<<== BALANCED <<<==**	Unconstrained Demand	UIPTC	PAF	Persons Exit
615	1	0	0	**0**	0	0	1	771
210(4) - Single-Family Detached Housing								210(5) - Single-Family Detached Housing
Persons Exit	PAF	UIPTC	Unconstrained Demand	**==>>> BALANCED ==>>>**	Unconstrained Demand	UIPTC	PAF	Persons Entry
601	1	0	0	**0**	0	0	1	529
Persons Entry	PAF	UIPTC	Unconstrained Demand	**<<<== BALANCED <<<==**	Unconstrained Demand	UIPTC	PAF	Persons Exit
601	1	0	0	**0**	0	0	1	529
210(4) - Single-Family Detached Housing								210(6) - Single-Family Detached Housing
Persons Exit	PAF	UIPTC	Unconstrained Demand	**==>>> BALANCED ==>>>**	Unconstrained Demand	UIPTC	PAF	Persons Entry
601	1	0	0	**0**	0	0	1	952
Persons Entry	PAF	UIPTC	Unconstrained Demand	**<<<== BALANCED <<<==**	Unconstrained Demand	UIPTC	PAF	Persons Exit
601	1	0	0	**0**	0	0	1	952
210(4) - Single-Family Detached Housing								210(7) - Single-Family Detached Housing
Persons Exit	PAF	UIPTC	Unconstrained Demand	**==>>> BALANCED ==>>>**	Unconstrained Demand	UIPTC	PAF	Persons Entry
601	1	0	0	**0**	0	0	1	0
Persons Entry	PAF	UIPTC	Unconstrained Demand	**<<<== BALANCED <<<==**	Unconstrained Demand	UIPTC	PAF	Persons Exit
601	1	0	0	**0**	0	0	1	0

210(4) - Single-Family Detached Housing								220 - Multifamily Housing (Low-Rise)
Persons Exit	PAF	UIPTC	Unconstrained Demand	==>>> BALANCED ==>>>	Unconstrained Demand	UIPTC	PAF	Persons Entry
601	1	0	0	**0**	0	0	1	509
Persons Entry	PAF	UIPTC	Unconstrained Demand	<<<== BALANCED <<<==	Unconstrained Demand	UIPTC	PAF	Persons Exit
601	1	0	0	**0**	0	0	1	509

210(4) - Single-Family Detached Housing								220(1) - Multifamily Housing (Low-Rise)
Persons Exit	PAF	UIPTC	Unconstrained Demand	==>>> BALANCED ==>>>	Unconstrained Demand	UIPTC	PAF	Persons Entry
601	1	0	0	**0**	0	0	1	660
Persons Entry	PAF	UIPTC	Unconstrained Demand	<<<== BALANCED <<<==	Unconstrained Demand	UIPTC	PAF	Persons Exit
601	1	0	0	**0**	0	0	1	660

210(4) - Single-Family Detached Housing								820 - Shopping Center
Persons Exit	PAF	UIPTC	Unconstrained Demand	==>>> BALANCED ==>>>	Unconstrained Demand	UIPTC	PAF	Persons Entry
601	1	0	0	**0**	0	0	1	1040
Persons Entry	PAF	UIPTC	Unconstrained Demand	<<<== BALANCED <<<==	Unconstrained Demand	UIPTC	PAF	Persons Exit
601	1	0	0	**0**	0	0	1	1040

210(4) - Single-Family Detached Housing								820(1) - Shopping Center
Persons Exit	PAF	UIPTC	Unconstrained Demand	==>>> BALANCED ==>>>	Unconstrained Demand	UIPTC	PAF	Persons Entry
601	1	0	0	**0**	0	0	1	5802
Persons Entry	PAF	UIPTC	Unconstrained Demand	<<<== BALANCED <<<==	Unconstrained Demand	UIPTC	PAF	Persons Exit
601	1	0	0	**0**	0	0	1	5802

210(4) - Single-Family Detached Housing								820(2) - Shopping Center
Persons Exit	PAF	UIPTC	Unconstrained Demand	==>>> BALANCED ==>>>	Unconstrained Demand	UIPTC	PAF	Persons Entry
601	1	0	0	**0**	0	0	1	2002
Persons Entry	PAF	UIPTC	Unconstrained Demand	<<<== BALANCED <<<==	Unconstrained Demand	UIPTC	PAF	Persons Exit
601	1	0	0	**0**	0	0	1	2002

210(4) - Single-Family Detached Housing								820(3) - Shopping Center
Persons Exit	PAF	UIPTC	Unconstrained Demand	==>>> BALANCED ==>>>	Unconstrained Demand	UIPTC	PAF	Persons Entry
601	1	0	0	**0**	0	0	1	2002
Persons Entry	PAF	UIPTC	Unconstrained Demand	<<<== BALANCED <<<==	Unconstrained Demand	UIPTC	PAF	Persons Exit
601	1	0	0	**0**	0	0	1	2002

210(4) - Single-Family Detached Housing								520 - Elementary School
Persons Exit	PAF	UIPTC	Unconstrained Demand	==>>> BALANCED ==>>>	Unconstrained Demand	UIPTC	PAF	Persons Entry
601	1	0	0	**0**	0	0	1	771
Persons Entry	PAF	UIPTC	Unconstrained Demand	<<<== BALANCED <<<==	Unconstrained Demand	UIPTC	PAF	Persons Exit
601	1	0	0	**0**	0	0	1	771

210(5) - Single-Family Detached Housing								210(6) - Single-Family Detached Housing
Persons Exit	PAF	UIPTC	Unconstrained Demand	==>>> BALANCED ==>>>	Unconstrained Demand	UIPTC	PAF	Persons Entry
529	1	0	0	**0**	0	0	1	952
Persons Entry	PAF	UIPTC	Unconstrained Demand	<<<== BALANCED <<<==	Unconstrained Demand	UIPTC	PAF	Persons Exit
529	1	0	0	**0**	0	0	1	952

210(5) - Single-Family Detached Housing								210(7) - Single-Family Detached Housing
Persons Exit	PAF	UIPTC	Unconstrained Demand	==>>> BALANCED ==>>>	Unconstrained Demand	UIPTC	PAF	Persons Entry
529	1	0	0	**0**	0	0	1	0
Persons Entry	PAF	UIPTC	Unconstrained Demand	<<<== BALANCED <<<==	Unconstrained Demand	UIPTC	PAF	Persons Exit
529	1	0	0	**0**	0	0	1	0

210(5) - Single-Family Detached Housing								220 - Multifamily Housing (Low-Rise)

Persons Exit	PAF	UIPTC	Unconstrained Demand	==>>> BALANCED ==>>>	Unconstrained Demand	UIPTC	PAF	Persons Entry
529	1	0	0	0	0	0	1	509
Persons Entry	PAF	UIPTC	Unconstrained Demand	<<<== BALANCED <<<==	Unconstrained Demand	UIPTC	PAF	Persons Exit
529	1	0	0	0	0	0	1	509
210(5) - Single-Family Detached Housing								220(1) - Multifamily Housing (Low-Rise)
Persons Exit	PAF	UIPTC	Unconstrained Demand	==>>> BALANCED ==>>>	Unconstrained Demand	UIPTC	PAF	Persons Entry
529	1	0	0	0	0	0	1	660
Persons Entry	PAF	UIPTC	Unconstrained Demand	<<<== BALANCED <<<==	Unconstrained Demand	UIPTC	PAF	Persons Exit
529	1	0	0	0	0	0	1	660
210(5) - Single-Family Detached Housing								820 - Shopping Center
Persons Exit	PAF	UIPTC	Unconstrained Demand	==>>> BALANCED ==>>>	Unconstrained Demand	UIPTC	PAF	Persons Entry
529	1	0	0	0	0	0	1	1040
Persons Entry	PAF	UIPTC	Unconstrained Demand	<<<== BALANCED <<<==	Unconstrained Demand	UIPTC	PAF	Persons Exit
529	1	0	0	0	0	0	1	1040
210(5) - Single-Family Detached Housing								820(1) - Shopping Center
Persons Exit	PAF	UIPTC	Unconstrained Demand	==>>> BALANCED ==>>>	Unconstrained Demand	UIPTC	PAF	Persons Entry
529	1	0	0	0	0	0	1	5802
Persons Entry	PAF	UIPTC	Unconstrained Demand	<<<== BALANCED <<<==	Unconstrained Demand	UIPTC	PAF	Persons Exit
529	1	0	0	0	0	0	1	5802
210(5) - Single-Family Detached Housing								820(2) - Shopping Center
Persons Exit	PAF	UIPTC	Unconstrained Demand	==>>> BALANCED ==>>>	Unconstrained Demand	UIPTC	PAF	Persons Entry
529	1	0	0	0	0	0	1	2002
Persons Entry	PAF	UIPTC	Unconstrained Demand	<<<== BALANCED <<<==	Unconstrained Demand	UIPTC	PAF	Persons Exit
529	1	0	0	0	0	0	1	2002
210(5) - Single-Family Detached Housing								820(3) - Shopping Center
Persons Exit	PAF	UIPTC	Unconstrained Demand	==>>> BALANCED ==>>>	Unconstrained Demand	UIPTC	PAF	Persons Entry
529	1	0	0	0	0	0	1	2002
Persons Entry	PAF	UIPTC	Unconstrained Demand	<<<== BALANCED <<<==	Unconstrained Demand	UIPTC	PAF	Persons Exit
529	1	0	0	0	0	0	1	2002
210(5) - Single-Family Detached Housing								520 - Elementary School
Persons Exit	PAF	UIPTC	Unconstrained Demand	==>>> BALANCED ==>>>	Unconstrained Demand	UIPTC	PAF	Persons Entry
529	1	0	0	0	0	0	1	771
Persons Entry	PAF	UIPTC	Unconstrained Demand	<<<== BALANCED <<<==	Unconstrained Demand	UIPTC	PAF	Persons Exit
529	1	0	0	0	0	0	1	771
210(6) - Single-Family Detached Housing								210(7) - Single-Family Detached Housing
Persons Exit	PAF	UIPTC	Unconstrained Demand	==>>> BALANCED ==>>>	Unconstrained Demand	UIPTC	PAF	Persons Entry
952	1	0	0	0	0	0	1	0
Persons Entry	PAF	UIPTC	Unconstrained Demand	<<<== BALANCED <<<==	Unconstrained Demand	UIPTC	PAF	Persons Exit
952	1	0	0	0	0	0	1	0
210(6) - Single-Family Detached Housing								220 - Multifamily Housing (Low-Rise)
Persons Exit	PAF	UIPTC	Unconstrained Demand	==>>> BALANCED ==>>>	Unconstrained Demand	UIPTC	PAF	Persons Entry
952	1	0	0	0	0	0	1	509
Persons Entry	PAF	UIPTC	Unconstrained Demand	<<<== BALANCED <<<==	Unconstrained Demand	UIPTC	PAF	Persons Exit
952	1	0	0	0	0	0	1	509
210(6) - Single-Family Detached Housing								220(1) - Multifamily Housing (Low-Rise)
Persons Exit	PAF	UIPTC	Unconstrained Demand	==>>> BALANCED ==>>>	Unconstrained Demand	UIPTC	PAF	Persons Entry
952	1	0	0	0	0	0	1	660

Persons Entry	PAF	UIPTC	Unconstrained Demand	**<<<== BALANCED <<<==**	Unconstrained Demand	UIPTC	PAF	Persons Exit
952	1	0	0	**0**	0	0	1	660
210(6) - Single-Family Detached Housing								820 - Shopping Center
Persons Exit	PAF	UIPTC	Unconstrained Demand	**==>>> BALANCED ==>>>**	Unconstrained Demand	UIPTC	PAF	Persons Entry
952	1	0	0	**0**	0	0	1	1040
Persons Entry	PAF	UIPTC	Unconstrained Demand	**<<<== BALANCED <<<==**	Unconstrained Demand	UIPTC	PAF	Persons Exit
952	1	0	0	**0**	0	0	1	1040
210(6) - Single-Family Detached Housing								820(1) - Shopping Center
Persons Exit	PAF	UIPTC	Unconstrained Demand	**==>>> BALANCED ==>>>**	Unconstrained Demand	UIPTC	PAF	Persons Entry
952	1	0	0	**0**	0	0	1	5802
Persons Entry	PAF	UIPTC	Unconstrained Demand	**<<<== BALANCED <<<==**	Unconstrained Demand	UIPTC	PAF	Persons Exit
952	1	0	0	**0**	0	0	1	5802
210(6) - Single-Family Detached Housing								820(2) - Shopping Center
Persons Exit	PAF	UIPTC	Unconstrained Demand	**==>>> BALANCED ==>>>**	Unconstrained Demand	UIPTC	PAF	Persons Entry
952	1	0	0	**0**	0	0	1	2002
Persons Entry	PAF	UIPTC	Unconstrained Demand	**<<<== BALANCED <<<==**	Unconstrained Demand	UIPTC	PAF	Persons Exit
952	1	0	0	**0**	0	0	1	2002
210(6) - Single-Family Detached Housing								820(3) - Shopping Center
Persons Exit	PAF	UIPTC	Unconstrained Demand	**==>>> BALANCED ==>>>**	Unconstrained Demand	UIPTC	PAF	Persons Entry
952	1	0	0	**0**	0	0	1	2002
Persons Entry	PAF	UIPTC	Unconstrained Demand	**<<<== BALANCED <<<==**	Unconstrained Demand	UIPTC	PAF	Persons Exit
952	1	0	0	**0**	0	0	1	2002
210(6) - Single-Family Detached Housing								520 - Elementary School
Persons Exit	PAF	UIPTC	Unconstrained Demand	**==>>> BALANCED ==>>>**	Unconstrained Demand	UIPTC	PAF	Persons Entry
952	1	0	0	**0**	0	0	1	771
Persons Entry	PAF	UIPTC	Unconstrained Demand	**<<<== BALANCED <<<==**	Unconstrained Demand	UIPTC	PAF	Persons Exit
952	1	0	0	**0**	0	0	1	771
210(7) - Single-Family Detached Housing								220 - Multifamily Housing (Low-Rise)
Persons Exit	PAF	UIPTC	Unconstrained Demand	**==>>> BALANCED ==>>>**	Unconstrained Demand	UIPTC	PAF	Persons Entry
0	1	0	0	**0**	0	0	1	509
Persons Entry	PAF	UIPTC	Unconstrained Demand	**<<<== BALANCED <<<==**	Unconstrained Demand	UIPTC	PAF	Persons Exit
0	1	0	0	**0**	0	0	1	509
210(7) - Single-Family Detached Housing								220(1) - Multifamily Housing (Low-Rise)
Persons Exit	PAF	UIPTC	Unconstrained Demand	**==>>> BALANCED ==>>>**	Unconstrained Demand	UIPTC	PAF	Persons Entry
0	1	0	0	**0**	0	0	1	660
Persons Entry	PAF	UIPTC	Unconstrained Demand	**<<<== BALANCED <<<==**	Unconstrained Demand	UIPTC	PAF	Persons Exit
0	1	0	0	**0**	0	0	1	660
210(7) - Single-Family Detached Housing								820 - Shopping Center
Persons Exit	PAF	UIPTC	Unconstrained Demand	**==>>> BALANCED ==>>>**	Unconstrained Demand	UIPTC	PAF	Persons Entry
0	1	0	0	**0**	0	0	1	1040
Persons Entry	PAF	UIPTC	Unconstrained Demand	**<<<== BALANCED <<<==**	Unconstrained Demand	UIPTC	PAF	Persons Exit
0	1	0	0	**0**	0	0	1	1040
210(7) - Single-Family Detached Housing								820(1) - Shopping Center
Persons Exit	PAF	UIPTC	Unconstrained Demand	**==>>> BALANCED ==>>>**	Unconstrained Demand	UIPTC	PAF	Persons Entry
0	1	0	0	**0**	0	0	1	5802
Persons Entry	PAF	UIPTC	Unconstrained Demand	**<<<== BALANCED <<<==**	Unconstrained Demand	UIPTC	PAF	Persons Exit
0	1	0	0	**0**	0	0	1	5802

210(7) - Single-Family Detached Housing								820(2) - Shopping Center
Persons Exit	PAF	UIPTC	Unconstrained Demand	==>>> BALANCED ==>>>	Unconstrained Demand	UIPTC	PAF	Persons Entry
0	1	0	0	**0**	0	0	1	2002
Persons Entry	PAF	UIPTC	Unconstrained Demand	<<<== BALANCED <<<==	Unconstrained Demand	UIPTC	PAF	Persons Exit
0	1	0	0	**0**	0	0	1	2002

210(7) - Single-Family Detached Housing								820(3) - Shopping Center
Persons Exit	PAF	UIPTC	Unconstrained Demand	==>>> BALANCED ==>>>	Unconstrained Demand	UIPTC	PAF	Persons Entry
0	1	0	0	**0**	0	0	1	2002
Persons Entry	PAF	UIPTC	Unconstrained Demand	<<<== BALANCED <<<==	Unconstrained Demand	UIPTC	PAF	Persons Exit
0	1	0	0	**0**	0	0	1	2002

210(7) - Single-Family Detached Housing								520 - Elementary School
Persons Exit	PAF	UIPTC	Unconstrained Demand	==>>> BALANCED ==>>>	Unconstrained Demand	UIPTC	PAF	Persons Entry
0	1	0	0	**0**	0	0	1	771
Persons Entry	PAF	UIPTC	Unconstrained Demand	<<<== BALANCED <<<==	Unconstrained Demand	UIPTC	PAF	Persons Exit
0	1	0	0	**0**	0	0	1	771

220 - Multifamily Housing (Low-Rise)								220(1) - Multifamily Housing (Low-Rise)
Persons Exit	PAF	UIPTC	Unconstrained Demand	==>>> BALANCED ==>>>	Unconstrained Demand	UIPTC	PAF	Persons Entry
509	1	0	0	**0**	0	0	1	660
Persons Entry	PAF	UIPTC	Unconstrained Demand	<<<== BALANCED <<<==	Unconstrained Demand	UIPTC	PAF	Persons Exit
509	1	0	0	**0**	0	0	1	660

220 - Multifamily Housing (Low-Rise)								820 - Shopping Center
Persons Exit	PAF	UIPTC	Unconstrained Demand	==>>> BALANCED ==>>>	Unconstrained Demand	UIPTC	PAF	Persons Entry
509	1	0	0	**0**	0	0	1	1040
Persons Entry	PAF	UIPTC	Unconstrained Demand	<<<== BALANCED <<<==	Unconstrained Demand	UIPTC	PAF	Persons Exit
509	1	0	0	**0**	0	0	1	1040

220 - Multifamily Housing (Low-Rise)								820(1) - Shopping Center
Persons Exit	PAF	UIPTC	Unconstrained Demand	==>>> BALANCED ==>>>	Unconstrained Demand	UIPTC	PAF	Persons Entry
509	1	0	0	**0**	0	0	1	5802
Persons Entry	PAF	UIPTC	Unconstrained Demand	<<<== BALANCED <<<==	Unconstrained Demand	UIPTC	PAF	Persons Exit
509	1	0	0	**0**	0	0	1	5802

220 - Multifamily Housing (Low-Rise)								820(2) - Shopping Center
Persons Exit	PAF	UIPTC	Unconstrained Demand	==>>> BALANCED ==>>>	Unconstrained Demand	UIPTC	PAF	Persons Entry
509	1	0	0	**0**	0	0	1	2002
Persons Entry	PAF	UIPTC	Unconstrained Demand	<<<== BALANCED <<<==	Unconstrained Demand	UIPTC	PAF	Persons Exit
509	1	0	0	**0**	0	0	1	2002

220 - Multifamily Housing (Low-Rise)								820(3) - Shopping Center
Persons Exit	PAF	UIPTC	Unconstrained Demand	==>>> BALANCED ==>>>	Unconstrained Demand	UIPTC	PAF	Persons Entry
509	1	0	0	**0**	0	0	1	2002
Persons Entry	PAF	UIPTC	Unconstrained Demand	<<<== BALANCED <<<==	Unconstrained Demand	UIPTC	PAF	Persons Exit
509	1	0	0	**0**	0	0	1	2002

220 - Multifamily Housing (Low-Rise)								520 - Elementary School
Persons Exit	PAF	UIPTC	Unconstrained Demand	==>>> BALANCED ==>>>	Unconstrained Demand	UIPTC	PAF	Persons Entry
509	1	0	0	**0**	0	0	1	771
Persons Entry	PAF	UIPTC	Unconstrained Demand	<<<== BALANCED <<<==	Unconstrained Demand	UIPTC	PAF	Persons Exit
509	1	0	0	**0**	0	0	1	771

220(1) - Multifamily Housing (Low-Rise)								820 - Shopping Center

Persons Exit	PAF	UIPTC	Unconstrained Demand	==>>> BALANCED ==>>>	Unconstrained Demand	UIPTC	PAF	Persons Entry
660	1	0	0	0	0	0	1	1040
Persons Entry	PAF	UIPTC	Unconstrained Demand	<<<== BALANCED <<<==	Unconstrained Demand	UIPTC	PAF	Persons Exit
660	1	0	0	0	0	0	1	1040
220(1) - Multifamily Housing (Low-Rise)								820(1) - Shopping Center
Persons Exit	PAF	UIPTC	Unconstrained Demand	==>>> BALANCED ==>>>	Unconstrained Demand	UIPTC	PAF	Persons Entry
660	1	0	0	0	0	0	1	5802
Persons Entry	PAF	UIPTC	Unconstrained Demand	<<<== BALANCED <<<==	Unconstrained Demand	UIPTC	PAF	Persons Exit
660	1	0	0	0	0	0	1	5802
220(1) - Multifamily Housing (Low-Rise)								820(2) - Shopping Center
Persons Exit	PAF	UIPTC	Unconstrained Demand	==>>> BALANCED ==>>>	Unconstrained Demand	UIPTC	PAF	Persons Entry
660	1	0	0	0	0	0	1	2002
Persons Entry	PAF	UIPTC	Unconstrained Demand	<<<== BALANCED <<<==	Unconstrained Demand	UIPTC	PAF	Persons Exit
660	1	0	0	0	0	0	1	2002
220(1) - Multifamily Housing (Low-Rise)								820(3) - Shopping Center
Persons Exit	PAF	UIPTC	Unconstrained Demand	==>>> BALANCED ==>>>	Unconstrained Demand	UIPTC	PAF	Persons Entry
660	1	0	0	0	0	0	1	2002
Persons Entry	PAF	UIPTC	Unconstrained Demand	<<<== BALANCED <<<==	Unconstrained Demand	UIPTC	PAF	Persons Exit
660	1	0	0	0	0	0	1	2002
220(1) - Multifamily Housing (Low-Rise)								520 - Elementary School
Persons Exit	PAF	UIPTC	Unconstrained Demand	==>>> BALANCED ==>>>	Unconstrained Demand	UIPTC	PAF	Persons Entry
660	1	0	0	0	0	0	1	771
Persons Entry	PAF	UIPTC	Unconstrained Demand	<<<== BALANCED <<<==	Unconstrained Demand	UIPTC	PAF	Persons Exit
660	1	0	0	0	0	0	1	771
820 - Shopping Center								820(1) - Shopping Center
Persons Exit	PAF	UIPTC	Unconstrained Demand	==>>> BALANCED ==>>>	Unconstrained Demand	UIPTC	PAF	Persons Entry
1040	1	0	0	0	0	0	1	5802
Persons Entry	PAF	UIPTC	Unconstrained Demand	<<<== BALANCED <<<==	Unconstrained Demand	UIPTC	PAF	Persons Exit
1040	1	0	0	0	0	0	1	5802
820 - Shopping Center								820(2) - Shopping Center
Persons Exit	PAF	UIPTC	Unconstrained Demand	==>>> BALANCED ==>>>	Unconstrained Demand	UIPTC	PAF	Persons Entry
1040	1	0	0	0	0	0	1	2002
Persons Entry	PAF	UIPTC	Unconstrained Demand	<<<== BALANCED <<<==	Unconstrained Demand	UIPTC	PAF	Persons Exit
1040	1	0	0	0	0	0	1	2002
820 - Shopping Center								820(3) - Shopping Center
Persons Exit	PAF	UIPTC	Unconstrained Demand	==>>> BALANCED ==>>>	Unconstrained Demand	UIPTC	PAF	Persons Entry
1040	1	0	0	0	0	0	1	2002
Persons Entry	PAF	UIPTC	Unconstrained Demand	<<<== BALANCED <<<==	Unconstrained Demand	UIPTC	PAF	Persons Exit
1040	1	0	0	0	0	0	1	2002
820 - Shopping Center								520 - Elementary School
Persons Exit	PAF	UIPTC	Unconstrained Demand	==>>> BALANCED ==>>>	Unconstrained Demand	UIPTC	PAF	Persons Entry
1040	1	0	0	0	0	0	1	771
Persons Entry	PAF	UIPTC	Unconstrained Demand	<<<== BALANCED <<<==	Unconstrained Demand	UIPTC	PAF	Persons Exit
1040	1	0	0	0	0	0	1	771
820(1) - Shopping Center								820(2) - Shopping Center
Persons Exit	PAF	UIPTC	Unconstrained Demand	==>>> BALANCED ==>>>	Unconstrained Demand	UIPTC	PAF	Persons Entry
5802	1	0	0	0	0	0	1	2002

Persons Entry	PAF	UIPTC	Unconstrained Demand	**<<<== BALANCED <<<==**	Unconstrained Demand	UIPTC	PAF	Persons Exit
5802	1	0	0	**0**	0	0	1	2002
820(1) - Shopping Center								820(3) - Shopping Center
Persons Exit	PAF	UIPTC	Unconstrained Demand	**==>>> BALANCED ==>>>**	Unconstrained Demand	UIPTC	PAF	Persons Entry
5802	1	0	0	**0**	0	0	1	2002
Persons Entry	PAF	UIPTC	Unconstrained Demand	**<<<== BALANCED <<<==**	Unconstrained Demand	UIPTC	PAF	Persons Exit
5802	1	0	0	**0**	0	0	1	2002
820(1) - Shopping Center								520 - Elementary School
Persons Exit	PAF	UIPTC	Unconstrained Demand	**==>>> BALANCED ==>>>**	Unconstrained Demand	UIPTC	PAF	Persons Entry
5802	1	0	0	**0**	0	0	1	771
Persons Entry	PAF	UIPTC	Unconstrained Demand	**<<<== BALANCED <<<==**	Unconstrained Demand	UIPTC	PAF	Persons Exit
5802	1	0	0	**0**	0	0	1	771
820(2) - Shopping Center								820(3) - Shopping Center
Persons Exit	PAF	UIPTC	Unconstrained Demand	**==>>> BALANCED ==>>>**	Unconstrained Demand	UIPTC	PAF	Persons Entry
2002	1	0	0	**0**	0	0	1	2002
Persons Entry	PAF	UIPTC	Unconstrained Demand	**<<<== BALANCED <<<==**	Unconstrained Demand	UIPTC	PAF	Persons Exit
2002	1	0	0	**0**	0	0	1	2002
820(2) - Shopping Center								520 - Elementary School
Persons Exit	PAF	UIPTC	Unconstrained Demand	**==>>> BALANCED ==>>>**	Unconstrained Demand	UIPTC	PAF	Persons Entry
2002	1	0	0	**0**	0	0	1	771
Persons Entry	PAF	UIPTC	Unconstrained Demand	**<<<== BALANCED <<<==**	Unconstrained Demand	UIPTC	PAF	Persons Exit
2002	1	0	0	**0**	0	0	1	771
820(3) - Shopping Center								520 - Elementary School
Persons Exit	PAF	UIPTC	Unconstrained Demand	**==>>> BALANCED ==>>>**	Unconstrained Demand	UIPTC	PAF	Persons Entry
2002	1	0	0	**0**	0	0	1	771
Persons Entry	PAF	UIPTC	Unconstrained Demand	**<<<== BALANCED <<<==**	Unconstrained Demand	UIPTC	PAF	Persons Exit
2002	1	0	0	**0**	0	0	1	771

INTERNAL PERSON TRIPS:

210 - Single-Family Detached Housing

Internal Person Trips From	Entry	Exit	Total
210(1) - Single-Family Detached Housing	0	0	0
210(2) - Single-Family Detached Housing	0	0	0
210(3) - Single-Family Detached Housing	0	0	0
210(4) - Single-Family Detached Housing	0	0	0
210(5) - Single-Family Detached Housing	0	0	0
210(6) - Single-Family Detached Housing	0	0	0
210(7) - Single-Family Detached Housing	0	0	0
220 - Multifamily Housing (Low-Rise)	0	0	0
220(1) - Multifamily Housing (Low-Rise)	0	0	0
820 - Shopping Center	0	0	0
820(1) - Shopping Center	0	0	0
820(2) - Shopping Center	0	0	0
820(3) - Shopping Center	0	0	0
520 - Elementary School	0	0	0
Total Internal Person Trips	**0**	**0**	**0**

210(1) - Single-Family Detached Housing

Internal Person Trips From	Entry	Exit	Total
210 - Single-Family Detached Housing	0	0	0

210(2) - Single-Family Detached Housing	0	0	0
210(3) - Single-Family Detached Housing	0	0	0
210(4) - Single-Family Detached Housing	0	0	0
210(5) - Single-Family Detached Housing	0	0	0
210(6) - Single-Family Detached Housing	0	0	0
210(7) - Single-Family Detached Housing	0	0	0
220 - Multifamily Housing (Low-Rise)	0	0	0
220(1) - Multifamily Housing (Low-Rise)	0	0	0
820 - Shopping Center	0	0	0
820(1) - Shopping Center	0	0	0
820(2) - Shopping Center	0	0	0
820(3) - Shopping Center	0	0	0
520 - Elementary School	0	0	0
Total Internal Person Trips	**0**	**0**	**0**

210(2) - Single-Family Detached Housing

Internal Person Trips From	Entry	Exit	Total
210 - Single-Family Detached Housing	0	0	0
210(1) - Single-Family Detached Housing	0	0	0
210(3) - Single-Family Detached Housing	0	0	0
210(4) - Single-Family Detached Housing	0	0	0
210(5) - Single-Family Detached Housing	0	0	0
210(6) - Single-Family Detached Housing	0	0	0
210(7) - Single-Family Detached Housing	0	0	0
220 - Multifamily Housing (Low-Rise)	0	0	0
220(1) - Multifamily Housing (Low-Rise)	0	0	0
820 - Shopping Center	0	0	0
820(1) - Shopping Center	0	0	0
820(2) - Shopping Center	0	0	0
820(3) - Shopping Center	0	0	0
520 - Elementary School	0	0	0
Total Internal Person Trips	**0**	**0**	**0**

210(3) - Single-Family Detached Housing

Internal Person Trips From	Entry	Exit	Total
210 - Single-Family Detached Housing	0	0	0
210(1) - Single-Family Detached Housing	0	0	0
210(2) - Single-Family Detached Housing	0	0	0
210(4) - Single-Family Detached Housing	0	0	0
210(5) - Single-Family Detached Housing	0	0	0
210(6) - Single-Family Detached Housing	0	0	0
210(7) - Single-Family Detached Housing	0	0	0
220 - Multifamily Housing (Low-Rise)	0	0	0
220(1) - Multifamily Housing (Low-Rise)	0	0	0
820 - Shopping Center	0	0	0
820(1) - Shopping Center	0	0	0
820(2) - Shopping Center	0	0	0
820(3) - Shopping Center	0	0	0
520 - Elementary School	0	0	0
Total Internal Person Trips	**0**	**0**	**0**

210(4) - Single-Family Detached Housing

Internal Person Trips From	Entry	Exit	Total
210 - Single-Family Detached Housing	0	0	0
210(1) - Single-Family Detached Housing	0	0	0
210(2) - Single-Family Detached Housing	0	0	0

210(3) - Single-Family Detached Housing	0	0	0
210(5) - Single-Family Detached Housing	0	0	0
210(6) - Single-Family Detached Housing	0	0	0
210(7) - Single-Family Detached Housing	0	0	0
220 - Multifamily Housing (Low-Rise)	0	0	0
220(1) - Multifamily Housing (Low-Rise)	0	0	0
820 - Shopping Center	0	0	0
820(1) - Shopping Center	0	0	0
820(2) - Shopping Center	0	0	0
820(3) - Shopping Center	0	0	0
520 - Elementary School	0	0	0
Total Internal Person Trips	**0**	**0**	**0**

210(5) - Single-Family Detached Housing

Internal Person Trips From	Entry	Exit	Total
210 - Single-Family Detached Housing	0	0	0
210(1) - Single-Family Detached Housing	0	0	0
210(2) - Single-Family Detached Housing	0	0	0
210(3) - Single-Family Detached Housing	0	0	0
210(4) - Single-Family Detached Housing	0	0	0
210(6) - Single-Family Detached Housing	0	0	0
210(7) - Single-Family Detached Housing	0	0	0
220 - Multifamily Housing (Low-Rise)	0	0	0
220(1) - Multifamily Housing (Low-Rise)	0	0	0
820 - Shopping Center	0	0	0
820(1) - Shopping Center	0	0	0
820(2) - Shopping Center	0	0	0
820(3) - Shopping Center	0	0	0
520 - Elementary School	0	0	0
Total Internal Person Trips	**0**	**0**	**0**

210(6) - Single-Family Detached Housing

Internal Person Trips From	Entry	Exit	Total
210 - Single-Family Detached Housing	0	0	0
210(1) - Single-Family Detached Housing	0	0	0
210(2) - Single-Family Detached Housing	0	0	0
210(3) - Single-Family Detached Housing	0	0	0
210(4) - Single-Family Detached Housing	0	0	0
210(5) - Single-Family Detached Housing	0	0	0
210(7) - Single-Family Detached Housing	0	0	0
220 - Multifamily Housing (Low-Rise)	0	0	0
220(1) - Multifamily Housing (Low-Rise)	0	0	0
820 - Shopping Center	0	0	0
820(1) - Shopping Center	0	0	0
820(2) - Shopping Center	0	0	0
820(3) - Shopping Center	0	0	0
520 - Elementary School	0	0	0
Total Internal Person Trips	**0**	**0**	**0**

210(7) - Single-Family Detached Housing

Internal Person Trips From	Entry	Exit	Total
210 - Single-Family Detached Housing	0	0	0
210(1) - Single-Family Detached Housing	0	0	0
210(2) - Single-Family Detached Housing	0	0	0
210(3) - Single-Family Detached Housing	0	0	0
210(4) - Single-Family Detached Housing	0	0	0

210(5) - Single-Family Detached Housing	0	0	0
210(6) - Single-Family Detached Housing	0	0	0
220 - Multifamily Housing (Low-Rise)	0	0	0
220(1) - Multifamily Housing (Low-Rise)	0	0	0
820 - Shopping Center	0	0	0
820(1) - Shopping Center	0	0	0
820(2) - Shopping Center	0	0	0
820(3) - Shopping Center	0	0	0
520 - Elementary School	0	0	0
Total Internal Person Trips	**0**	**0**	**0**

220 - Multifamily Housing (Low-Rise)

Internal Person Trips From	Entry	Exit	Total
210 - Single-Family Detached Housing	0	0	0
210(1) - Single-Family Detached Housing	0	0	0
210(2) - Single-Family Detached Housing	0	0	0
210(3) - Single-Family Detached Housing	0	0	0
210(4) - Single-Family Detached Housing	0	0	0
210(5) - Single-Family Detached Housing	0	0	0
210(6) - Single-Family Detached Housing	0	0	0
210(7) - Single-Family Detached Housing	0	0	0
220(1) - Multifamily Housing (Low-Rise)	0	0	0
820 - Shopping Center	0	0	0
820(1) - Shopping Center	0	0	0
820(2) - Shopping Center	0	0	0
820(3) - Shopping Center	0	0	0
520 - Elementary School	0	0	0
Total Internal Person Trips	**0**	**0**	**0**

220(1) - Multifamily Housing (Low-Rise)

Internal Person Trips From	Entry	Exit	Total
210 - Single-Family Detached Housing	0	0	0
210(1) - Single-Family Detached Housing	0	0	0
210(2) - Single-Family Detached Housing	0	0	0
210(3) - Single-Family Detached Housing	0	0	0
210(4) - Single-Family Detached Housing	0	0	0
210(5) - Single-Family Detached Housing	0	0	0
210(6) - Single-Family Detached Housing	0	0	0
210(7) - Single-Family Detached Housing	0	0	0
220 - Multifamily Housing (Low-Rise)	0	0	0
820 - Shopping Center	0	0	0
820(1) - Shopping Center	0	0	0
820(2) - Shopping Center	0	0	0
820(3) - Shopping Center	0	0	0
520 - Elementary School	0	0	0
Total Internal Person Trips	**0**	**0**	**0**

820 - Shopping Center

Internal Person Trips From	Entry	Exit	Total
210 - Single-Family Detached Housing	0	0	0
210(1) - Single-Family Detached Housing	0	0	0
210(2) - Single-Family Detached Housing	0	0	0
210(3) - Single-Family Detached Housing	0	0	0
210(4) - Single-Family Detached Housing	0	0	0
210(5) - Single-Family Detached Housing	0	0	0
210(6) - Single-Family Detached Housing	0	0	0

210(7) - Single-Family Detached Housing	0	0	0
220 - Multifamily Housing (Low-Rise)	0	0	0
220(1) - Multifamily Housing (Low-Rise)	0	0	0
820(1) - Shopping Center	0	0	0
820(2) - Shopping Center	0	0	0
820(3) - Shopping Center	0	0	0
520 - Elementary School	0	0	0
Total Internal Person Trips	**0**	**0**	**0**

820(1) - Shopping Center

Internal Person Trips From	Entry	Exit	Total
210 - Single-Family Detached Housing	0	0	0
210(1) - Single-Family Detached Housing	0	0	0
210(2) - Single-Family Detached Housing	0	0	0
210(3) - Single-Family Detached Housing	0	0	0
210(4) - Single-Family Detached Housing	0	0	0
210(5) - Single-Family Detached Housing	0	0	0
210(6) - Single-Family Detached Housing	0	0	0
210(7) - Single-Family Detached Housing	0	0	0
220 - Multifamily Housing (Low-Rise)	0	0	0
220(1) - Multifamily Housing (Low-Rise)	0	0	0
820 - Shopping Center	0	0	0
820(2) - Shopping Center	0	0	0
820(3) - Shopping Center	0	0	0
520 - Elementary School	0	0	0
Total Internal Person Trips	**0**	**0**	**0**

820(2) - Shopping Center

Internal Person Trips From	Entry	Exit	Total
210 - Single-Family Detached Housing	0	0	0
210(1) - Single-Family Detached Housing	0	0	0
210(2) - Single-Family Detached Housing	0	0	0
210(3) - Single-Family Detached Housing	0	0	0
210(4) - Single-Family Detached Housing	0	0	0
210(5) - Single-Family Detached Housing	0	0	0
210(6) - Single-Family Detached Housing	0	0	0
210(7) - Single-Family Detached Housing	0	0	0
220 - Multifamily Housing (Low-Rise)	0	0	0
220(1) - Multifamily Housing (Low-Rise)	0	0	0
820 - Shopping Center	0	0	0
820(1) - Shopping Center	0	0	0
820(3) - Shopping Center	0	0	0
520 - Elementary School	0	0	0
Total Internal Person Trips	**0**	**0**	**0**

820(3) - Shopping Center

Internal Person Trips From	Entry	Exit	Total
210 - Single-Family Detached Housing	0	0	0
210(1) - Single-Family Detached Housing	0	0	0
210(2) - Single-Family Detached Housing	0	0	0
210(3) - Single-Family Detached Housing	0	0	0
210(4) - Single-Family Detached Housing	0	0	0
210(5) - Single-Family Detached Housing	0	0	0
210(6) - Single-Family Detached Housing	0	0	0
210(7) - Single-Family Detached Housing	0	0	0
220 - Multifamily Housing (Low-Rise)	0	0	0

220(1) - Multifamily Housing (Low-Rise)	0	0	0
820 - Shopping Center	0	0	0
820(1) - Shopping Center	0	0	0
820(2) - Shopping Center	0	0	0
520 - Elementary School	0	0	0
Total Internal Person Trips	**0**	**0**	**0**

520 - Elementary School

Internal Person Trips From	Entry	Exit	Total
210 - Single-Family Detached Housing	0	0	0
210(1) - Single-Family Detached Housing	0	0	0
210(2) - Single-Family Detached Housing	0	0	0
210(3) - Single-Family Detached Housing	0	0	0
210(4) - Single-Family Detached Housing	0	0	0
210(5) - Single-Family Detached Housing	0	0	0
210(6) - Single-Family Detached Housing	0	0	0
210(7) - Single-Family Detached Housing	0	0	0
220 - Multifamily Housing (Low-Rise)	0	0	0
220(1) - Multifamily Housing (Low-Rise)	0	0	0
820 - Shopping Center	0	0	0
820(1) - Shopping Center	0	0	0
820(2) - Shopping Center	0	0	0
820(3) - Shopping Center	0	0	0
Total Internal Person Trips	**0**	**0**	**0**

INTERNAL VEHICLE TRIPS AND CAPTURE:
210 - Single-Family Detached Housing

Total Internal Person Trips	0	0	0
Vehicle Mode Share	100%	100%	-
Vehicle Occupancy	1.00	1.00	-
Total Vehicle Internal Trips	**0**	**0**	**0**
Total External Vehicle Trips	685	685	1370
Internal Vehicle Trip Capture	**0%**	**0%**	**0%**

210(1) - Single-Family Detached Housing

Total Internal Person Trips	0	0	0
Vehicle Mode Share	100%	100%	-
Vehicle Occupancy	1.00	1.00	-
Total Vehicle Internal Trips	**0**	**0**	**0**
Total External Vehicle Trips	709	709	1418
Internal Vehicle Trip Capture	**0%**	**0%**	**0%**

210(2) - Single-Family Detached Housing

Total Internal Person Trips	0	0	0
Vehicle Mode Share	100%	100%	-
Vehicle Occupancy	1.00	1.00	-
Total Vehicle Internal Trips	**0**	**0**	**0**
Total External Vehicle Trips	290	290	580
Internal Vehicle Trip Capture	**0%**	**0%**	**0%**

210(3) - Single-Family Detached Housing

Total Internal Person Trips	0	0	0

Vehicle Mode Share	100%	100%	-
Vehicle Occupancy	1.00	1.00	-
Total Vehicle Internal Trips	**0**	**0**	**0**
Total External Vehicle Trips	615	615	1230
Internal Vehicle Trip Capture	**0%**	**0%**	**0%**

210(4) - Single-Family Detached Housing

Total Internal Person Trips	0	0	0
Vehicle Mode Share	100%	100%	-
Vehicle Occupancy	1.00	1.00	-
Total Vehicle Internal Trips	**0**	**0**	**0**
Total External Vehicle Trips	601	601	1202
Internal Vehicle Trip Capture	**0%**	**0%**	**0%**

210(5) - Single-Family Detached Housing

Total Internal Person Trips	0	0	0
Vehicle Mode Share	100%	100%	-
Vehicle Occupancy	1.00	1.00	-
Total Vehicle Internal Trips	**0**	**0**	**0**
Total External Vehicle Trips	529	529	1058
Internal Vehicle Trip Capture	**0%**	**0%**	**0%**

210(6) - Single-Family Detached Housing

Total Internal Person Trips	0	0	0
Vehicle Mode Share	100%	100%	-
Vehicle Occupancy	1.00	1.00	-
Total Vehicle Internal Trips	**0**	**0**	**0**
Total External Vehicle Trips	952	952	1904
Internal Vehicle Trip Capture	**0%**	**0%**	**0%**

210(7) - Single-Family Detached Housing

Total Internal Person Trips	0	0	0
Vehicle Mode Share	100%	100%	-
Vehicle Occupancy	1.00	1.00	-
Total Vehicle Internal Trips	**0**	**0**	**0**
Total External Vehicle Trips	0	0	0
Internal Vehicle Trip Capture	**0%**	**0%**	**0%**

220 - Multifamily Housing (Low-Rise)

Total Internal Person Trips	0	0	0
Vehicle Mode Share	100%	100%	-
Vehicle Occupancy	1.00	1.00	-
Total Vehicle Internal Trips	**0**	**0**	**0**
Total External Vehicle Trips	509	509	1018
Internal Vehicle Trip Capture	**0%**	**0%**	**0%**

220(1) - Multifamily Housing (Low-Rise)

Total Internal Person Trips	0	0	0
Vehicle Mode Share	100%	100%	-
Vehicle Occupancy	1.00	1.00	-

Total Vehicle Internal Trips	**0**	**0**	**0**
Total External Vehicle Trips	660	660	1320
Internal Vehicle Trip Capture	**0%**	**0%**	**0%**

820 - Shopping Center

Total Internal Person Trips	0	0	0
Vehicle Mode Share	100%	100%	-
Vehicle Occupancy	1.00	1.00	-
Total Vehicle Internal Trips	**0**	**0**	**0**
Total External Vehicle Trips	1040	1040	2080
Internal Vehicle Trip Capture	**0%**	**0%**	**0%**

820(1) - Shopping Center

Total Internal Person Trips	0	0	0
Vehicle Mode Share	100%	100%	-
Vehicle Occupancy	1.00	1.00	-
Total Vehicle Internal Trips	**0**	**0**	**0**
Total External Vehicle Trips	5802	5802	11604
Internal Vehicle Trip Capture	**0%**	**0%**	**0%**

820(2) - Shopping Center

Total Internal Person Trips	0	0	0
Vehicle Mode Share	100%	100%	-
Vehicle Occupancy	1.00	1.00	-
Total Vehicle Internal Trips	**0**	**0**	**0**
Total External Vehicle Trips	2002	2002	4004
Internal Vehicle Trip Capture	**0%**	**0%**	**0%**

820(3) - Shopping Center

Total Internal Person Trips	0	0	0
Vehicle Mode Share	100%	100%	-
Vehicle Occupancy	1.00	1.00	-
Total Vehicle Internal Trips	**0**	**0**	**0**
Total External Vehicle Trips	2002	2002	4004
Internal Vehicle Trip Capture	**0%**	**0%**	**0%**

520 - Elementary School

Total Internal Person Trips	0	0	0
Vehicle Mode Share	100%	100%	-
Vehicle Occupancy	1.00	1.00	-
Total Vehicle Internal Trips	**0**	**0**	**0**
Total External Vehicle Trips	771	771	1542
Internal Vehicle Trip Capture	**0%**	**0%**	**0%**

PASS-BY VEHICLE TRIP REDUCTION

Land Use	External Vehicle Trips		Pass-by Vehicle Trip %		Pass-by Vehicle Trips	
	Entry	Exit	Entry (%)	Exit (%)	Entry	Exit
210 - Single-Family Detached Housing	685	685	0.00%	0.00%	0	0
210(1) - Single-Family Detached Housing	709	709	0.00%	0.00%	0	0

210(2) - Single-Family Detached Housing	290	290	0.00%	0.00%	0	0
210(3) - Single-Family Detached Housing	615	615	0.00%	0.00%	0	0
210(4) - Single-Family Detached Housing	601	601	0.00%	0.00%	0	0
210(5) - Single-Family Detached Housing	529	529	0.00%	0.00%	0	0
210(6) - Single-Family Detached Housing	952	952	0.00%	0.00%	0	0
210(7) - Single-Family Detached Housing	0	0	0.00%	0.00%	0	0
220 - Multifamily Housing (Low-Rise)	509	509	0.00%	0.00%	0	0
220(1) - Multifamily Housing (Low-Rise)	660	660	0.00%	0.00%	0	0
820 - Shopping Center	1040	1040	0.00%	0.00%	0	0
820(1) - Shopping Center	5802	5802	0.00%	0.00%	0	0
820(2) - Shopping Center	2002	2002	0.00%	0.00%	0	0
820(3) - Shopping Center	2002	2002	0.00%	0.00%	0	0
520 - Elementary School	771	771	0.00%	0.00%	0	0

DIVERTED VEHICLE TRIP REDUCTION

Land Use	External Vehicle Trips		Diverted Vehicle Trip %		Diverted Vehicle Trips	
	Entry	Exit	Entry (%)	Exit (%)	Entry	Exit
210 - Single-Family Detached Housing	685	685	0.00%	0.00%	0	0
210(1) - Single-Family Detached Housing	709	709	0.00%	0.00%	0	0
210(2) - Single-Family Detached Housing	290	290	0.00%	0.00%	0	0
210(3) - Single-Family Detached Housing	615	615	0.00%	0.00%	0	0
210(4) - Single-Family Detached Housing	601	601	0.00%	0.00%	0	0
210(5) - Single-Family Detached Housing	529	529	0.00%	0.00%	0	0
210(6) - Single-Family Detached Housing	952	952	0.00%	0.00%	0	0
210(7) - Single-Family Detached Housing	0	0	0.00%	0.00%	0	0
220 - Multifamily Housing (Low-Rise)	509	509	0.00%	0.00%	0	0
220(1) - Multifamily Housing (Low-Rise)	660	660	0.00%	0.00%	0	0
820 - Shopping Center	1040	1040	0.00%	0.00%	0	0
820(1) - Shopping Center	5802	5802	0.00%	0.00%	0	0
820(2) - Shopping Center	2002	2002	0.00%	0.00%	0	0
820(3) - Shopping Center	2002	2002	0.00%	0.00%	0	0
520 - Elementary School	771	771	0.00%	0.00%	0	0

EXTRA VEHICLE TRIP REDUCTION

Land Use	(External - (Pass-by + Diverted)) Vehicle Trips		Extra Vehicle Trip Reduction %		Extra Reduced Vehicle Trips	
	Entry	Exit	Entry (%)	Exit (%)	Entry	Exit
210 - Single-Family Detached Housing	685	685	0.00%	0.00%	0	0
210(1) - Single-Family Detached Housing	709	709	0.00%	0.00%	0	0
210(2) - Single-Family Detached Housing	290	290	0.00%	0.00%	0	0
210(3) - Single-Family Detached Housing	615	615	0.00%	0.00%	0	0
210(4) - Single-Family Detached Housing	601	601	0.00%	0.00%	0	0
210(5) - Single-Family Detached Housing	529	529	0.00%	0.00%	0	0
210(6) - Single-Family Detached Housing	952	952	0.00%	0.00%	0	0
210(7) - Single-Family Detached Housing	0	0	0.00%	0.00%	0	0
220 - Multifamily Housing (Low-Rise)	509	509	0.00%	0.00%	0	0
220(1) - Multifamily Housing (Low-Rise)	660	660	0.00%	0.00%	0	0
820 - Shopping Center	1040	1040	0.00%	0.00%	0	0
820(1) - Shopping Center	5802	5802	0.00%	0.00%	0	0
820(2) - Shopping Center	2002	2002	0.00%	0.00%	0	0
820(3) - Shopping Center	2002	2002	0.00%	0.00%	0	0
520 - Elementary School	771	771	0.00%	0.00%	0	0

NEW VEHICLE TRIPS

Land Use	New Vehicle Trips		
	Entry	Exit	Total
210 - Single-Family Detached Housing	685	685	1370
210(1) - Single-Family Detached Housing	709	709	1418
210(2) - Single-Family Detached Housing	290	290	580
210(3) - Single-Family Detached Housing	615	615	1230
210(4) - Single-Family Detached Housing	601	601	1202
210(5) - Single-Family Detached Housing	529	529	1058
210(6) - Single-Family Detached Housing	952	952	1904
210(7) - Single-Family Detached Housing	0	0	0
220 - Multifamily Housing (Low-Rise)	509	509	1018
220(1) - Multifamily Housing (Low-Rise)	660	660	1320
820 - Shopping Center	1040	1040	2080
820(1) - Shopping Center	5802	5802	11604
820(2) - Shopping Center	2002	2002	4004
820(3) - Shopping Center	2002	2002	4004
520 - Elementary School	771	771	1542

Land Use	New Vehicle Trips (PPV)		
	Entry	Exit	Total
210 - Single-Family Detached Housing	685	685	1370
210(1) - Single-Family Detached Housing	709	709	1418
210(2) - Single-Family Detached Housing	290	290	580
210(3) - Single-Family Detached Housing	615	615	1230
210(4) - Single-Family Detached Housing	601	601	1202
210(5) - Single-Family Detached Housing	529	529	1058
210(6) - Single-Family Detached Housing	952	952	1904
210(7) - Single-Family Detached Housing	0	0	0
220 - Multifamily Housing (Low-Rise)	509	509	1018
220(1) - Multifamily Housing (Low-Rise)	660	660	1320
820 - Shopping Center	1040	1040	2080
820(1) - Shopping Center	5802	5802	11604
820(2) - Shopping Center	2002	2002	4004
820(3) - Shopping Center	2002	2002	4004
520 - Elementary School	771	771	1542

Land Use	New Vehicle Trips (Truck)		
	Entry	Exit	Total
210 - Single-Family Detached Housing	0	0	0
210(1) - Single-Family Detached Housing	0	0	0
210(2) - Single-Family Detached Housing	0	0	0
210(3) - Single-Family Detached Housing	0	0	0
210(4) - Single-Family Detached Housing	0	0	0
210(5) - Single-Family Detached Housing	0	0	0
210(6) - Single-Family Detached Housing	0	0	0
210(7) - Single-Family Detached Housing	0	0	0
220 - Multifamily Housing (Low-Rise)	0	0	0
220(1) - Multifamily Housing (Low-Rise)	0	0	0
820 - Shopping Center	0	0	0
820(1) - Shopping Center	0	0	0
820(2) - Shopping Center	0	0	0
820(3) - Shopping Center	0	0	0
520 - Elementary School	0	0	0

RESULTS

Site Totals	Entry	Exit	Total
Vehicle Trips Before Reduction	17167	17167	34334
Vehicle Trips After Multi-modal Adjustment	17167	17167	34334
Internal Vehicle Trips	0	0	0
External Vehicle Trips	17167	17167	34334
Internal Vehicle Trip Capture	0%	0%	0%
Pass-by Vehicle Trips	0	0	0
Diverted Vehicle Trips	0	0	0
Extra Reduced Vehicle Trips	0	0	0
New Vehicle Trips	17167	17167	34334
PPV	17167	17167	34334
Truck	0	0	0
Person Trips by Other Modes	0	0	0

Appendix D

2030 BACKGROUND TRAFFIC LEVEL OF SERVICE OUTPUT

Lane Group	EBL	EBT	EBR	WBL	WBT	WBR	NBL	NBT	NBR	SBL	SBT	SBR
Lane Group Flow (vph)	145	64	12	173	96	48	38	438	36	73	412	45
v/c Ratio	0.42	0.14	0.04	0.45	0.20	0.14	0.07	0.25	0.04	0.12	0.22	0.05
Control Delay	19.9	22.2	0.2	19.3	22.4	0.9	7.1	12.4	0.1	7.3	10.6	0.1
Queue Delay	0.0	0.0	0.0	0.0	0.0	0.0	0.0	0.0	0.0	0.0	0.0	0.0
Total Delay	19.9	22.2	0.2	19.3	22.4	0.9	7.1	12.4	0.1	7.3	10.6	0.1
Queue Length 50th (ft)	36	10	0	44	15	0	5	55	0	11	34	0
Queue Length 95th (ft)	73	24	0	86	33	0	17	90	0	27	82	0
Internal Link Dist (ft)		911			760			1157			1874	
Turn Bay Length (ft)	235		450	200		400	700		600			490
Base Capacity (vph)	343	2602	1199	381	2616	1205	582	1754	852	593	1908	916
Starvation Cap Reductn	0	0	0	0	0	0	0	0	0	0	0	0
Spillback Cap Reductn	0	0	0	0	0	0	0	0	0	0	0	0
Storage Cap Reductn	0	0	0	0	0	0	0	0	0	0	0	0
Reduced v/c Ratio	0.42	0.02	0.01	0.45	0.04	0.04	0.07	0.25	0.04	0.12	0.22	0.05

Intersection Summary

Movement	EBL	EBT	EBR	WBL	WBT	WBR	NBL	NBT	NBR	SBL	SBT	SBR
Lane Configurations												
Traffic Volume (veh/h)	133	59	11	159	88	44	35	403	33	67	379	41
Future Volume (veh/h)	133	59	11	159	88	44	35	403	33	67	379	41
Initial Q (Qb), veh	0	0	0	0	0	0	0	0	0	0	0	0
Ped-Bike Adj(A_pbT)	1.00		1.00	1.00		1.00	1.00		1.00	1.00		1.00
Parking Bus, Adj	1.00	1.00	1.00	1.00	1.00	1.00	1.00	1.00	1.00	1.00	1.00	1.00
Work Zone On Approach		No			No			No			No	
Adj Sat Flow, veh/h/ln	1870	1870	1870	1870	1870	1870	1870	1870	1870	1870	1870	1870
Adj Flow Rate, veh/h	145	64	0	173	96	0	38	438	0	73	412	0
Peak Hour Factor	0.92	0.92	0.92	0.92	0.92	0.92	0.92	0.92	0.92	0.92	0.92	0.92
Percent Heavy Veh, %	2	2	2	2	2	2	2	2	2	2	2	2
Cap, veh/h	424	342		445	394		527	1345		529	1424	
Arrive On Green	0.10	0.10	0.00	0.11	0.11	0.00	0.04	0.38	0.00	0.06	0.40	0.00
Sat Flow, veh/h	1781	3554	1585	1781	3554	1585	1781	3554	1585	1781	3554	1585
Grp Volume(v), veh/h	145	64	0	173	96	0	38	438	0	73	412	0
Grp Sat Flow(s),veh/h/ln	1781	1777	1585	1781	1777	1585	1781	1777	1585	1781	1777	1585
Q Serve(g_s), s	3.7	0.8	0.0	4.4	1.3	0.0	0.6	4.5	0.0	1.2	4.0	0.0
Cycle Q Clear(g_c), s	3.7	0.8	0.0	4.4	1.3	0.0	0.6	4.5	0.0	1.2	4.0	0.0
Prop In Lane	1.00		1.00	1.00		1.00	1.00		1.00	1.00		1.00
Lane Grp Cap(c), veh/h	424	342		445	394		527	1345		529	1424	
V/C Ratio(X)	0.34	0.19		0.39	0.24		0.07	0.33		0.14	0.29	
Avail Cap(c_a), veh/h	444	2495		445	2509		628	1345		622	1424	
HCM Platoon Ratio	1.00	1.00	1.00	1.00	1.00	1.00	1.00	1.00	1.00	1.00	1.00	1.00
Upstream Filter(I)	1.00	1.00	0.00	1.00	1.00	0.00	1.00	1.00	0.00	1.00	1.00	0.00
Uniform Delay (d), s/veh	18.2	21.3	0.0	17.8	20.8	0.0	8.9	11.3	0.0	8.6	10.4	0.0
Incr Delay (d2), s/veh	0.5	0.3	0.0	0.6	0.3	0.0	0.1	0.6	0.0	0.1	0.5	0.0
Initial Q Delay(d3),s/veh	0.0	0.0	0.0	0.0	0.0	0.0	0.0	0.0	0.0	0.0	0.0	0.0
%ile BackOfQ(50%),veh/ln	1.4	0.3	0.0	1.7	0.5	0.0	0.2	1.6	0.0	0.4	1.4	0.0
Unsig. Movement Delay, s/veh												
LnGrp Delay(d),s/veh	18.7	21.6	0.0	18.4	21.1	0.0	9.0	11.9	0.0	8.7	10.9	0.0
LnGrp LOS	B	C		B	C		A	B		A	B	
Approach Vol, veh/h		209	A		269	A		476	A		485	A
Approach Delay, s/veh		19.6			19.4			11.7			10.6	
Approach LOS		B			B			B			B	

Timer - Assigned Phs	1	2	3	4	5	6	7	8
Phs Duration (G+Y+Rc), s	7.7	23.9	10.2	9.4	6.6	25.0	9.4	10.2
Change Period (Y+Rc), s	4.5	4.5	4.5	4.5	4.5	4.5	4.5	4.5
Max Green Setting (Gmax), s	5.9	19.4	5.7	36.0	5.0	20.3	5.5	36.2
Max Q Clear Time (g_c+I1), s	3.2	6.5	6.4	2.8	2.6	6.0	5.7	3.3
Green Ext Time (p_c), s	0.0	2.3	0.0	0.3	0.0	2.3	0.0	0.6

Intersection Summary	
HCM 6th Ctrl Delay	13.9
HCM 6th LOS	B

Notes

Unsignalized Delay for [NBR, EBR, WBR, SBR] is excluded from calculations of the approach delay and intersection delay.

Intersection	
Int Delay, s/veh	0.5

Movement	EBT	EBR	WBL	WBT	NBL	NBR
Lane Configurations						
Traffic Vol, veh/h	128	10	2	251	15	2
Future Vol, veh/h	128	10	2	251	15	2
Conflicting Peds, #/hr	0	0	0	0	0	0
Sign Control	Free	Free	Free	Free	Stop	Stop
RT Channelized	-	None	-	None	-	None
Storage Length	-	235	235	-	0	-
Veh in Median Storage, #	0	-	-	0	0	-
Grade, %	0	-	-	0	0	-
Peak Hour Factor	92	92	92	92	92	92
Heavy Vehicles, %	2	2	2	2	2	2
Mvmt Flow	139	11	2	273	16	2

Major/Minor	Major1		Major2		Minor1	
Conflicting Flow All	0	0	150	0	280	70
Stage 1	-	-	-	-	139	-
Stage 2	-	-	-	-	141	-
Critical Hdwy	-	-	4.14	-	6.84	6.94
Critical Hdwy Stg 1	-	-	-	-	5.84	-
Critical Hdwy Stg 2	-	-	-	-	5.84	-
Follow-up Hdwy	-	-	2.22	-	3.52	3.32
Pot Cap-1 Maneuver	-	-	1429	-	687	978
Stage 1	-	-	-	-	873	-
Stage 2	-	-	-	-	871	-
Platoon blocked, %	-	-		-		
Mov Cap-1 Maneuver	-	-	1429	-	686	978
Mov Cap-2 Maneuver	-	-	-	-	686	-
Stage 1	-	-	-	-	873	-
Stage 2	-	-	-	-	870	-

Approach	EB	WB	NB
HCM Control Delay, s	0	0.1	10.2
HCM LOS			B

Minor Lane/Major Mvmt	NBLn1	EBT	EBR	WBL	WBT
Capacity (veh/h)	711	-	-	1429	-
HCM Lane V/C Ratio	0.026	-	-	0.002	-
HCM Control Delay (s)	10.2	-	-	7.5	-
HCM Lane LOS	B	-	-	A	-
HCM 95th %tile Q(veh)	0.1	-	-	0	-

Lane Group	EBL	EBT	EBR	WBL	WBT	WBR	NBL	NBT	NBR	SBL	SBT	SBR
Lane Group Flow (vph)	33	338	45	338	951	504	142	468	138	199	450	39
v/c Ratio	0.17	0.42	0.09	0.67	0.73	0.62	0.47	0.41	0.22	0.58	0.38	0.06
Control Delay	47.2	31.0	0.4	45.1	28.7	10.4	47.5	27.4	3.8	48.8	26.3	0.2
Queue Delay	0.0	0.0	0.0	0.0	0.0	0.0	0.0	0.0	0.0	0.0	0.0	0.0
Total Delay	47.2	31.0	0.4	45.1	28.7	10.4	47.5	27.4	3.8	48.8	26.3	0.2
Queue Length 50th (ft)	10	89	0	106	263	61	45	128	0	63	120	0
Queue Length 95th (ft)	26	130	0	152	336	166	76	176	31	101	166	0
Internal Link Dist (ft)		664			834			2595			1908	
Turn Bay Length (ft)	235		235				455		455	385		385
Base Capacity (vph)	191	1106	607	592	1517	884	324	1143	622	363	1184	638
Starvation Cap Reductn	0	0	0	0	0	0	0	0	0	0	0	0
Spillback Cap Reductn	0	0	0	0	0	0	0	0	0	0	0	0
Storage Cap Reductn	0	0	0	0	0	0	0	0	0	0	0	0
Reduced v/c Ratio	0.17	0.31	0.07	0.57	0.63	0.57	0.44	0.41	0.22	0.55	0.38	0.06

Intersection Summary

Movement	EBL	EBT	EBR	WBL	WBT	WBR	NBL	NBT	NBR	SBL	SBT	SBR
Lane Configurations												
Traffic Volume (veh/h)	30	311	41	311	875	464	131	431	127	183	414	36
Future Volume (veh/h)	30	311	41	311	875	464	131	431	127	183	414	36
Initial Q (Qb), veh	0	0	0	0	0	0	0	0	0	0	0	0
Ped-Bike Adj(A_pbT)	1.00		1.00	1.00		1.00	1.00		1.00	1.00		1.00
Parking Bus, Adj	1.00	1.00	1.00	1.00	1.00	1.00	1.00	1.00	1.00	1.00	1.00	1.00
Work Zone On Approach		No			No			No			No	
Adj Sat Flow, veh/h/ln	1870	1870	1870	1870	1870	1870	1870	1870	1870	1870	1870	1870
Adj Flow Rate, veh/h	33	338	0	338	951	0	142	468	0	199	450	0
Peak Hour Factor	0.92	0.92	0.92	0.92	0.92	0.92	0.92	0.92	0.92	0.92	0.92	0.92
Percent Heavy Veh, %	2	2	2	2	2	2	2	2	2	2	2	2
Cap, veh/h	110	868		432	1199		216	1206		279	1270	
Arrive On Green	0.03	0.24	0.00	0.13	0.34	0.00	0.06	0.34	0.00	0.08	0.36	0.00
Sat Flow, veh/h	3456	3554	1585	3456	3554	1585	3456	3554	1585	3456	3554	1585
Grp Volume(v), veh/h	33	338	0	338	951	0	142	468	0	199	450	0
Grp Sat Flow(s),veh/h/ln	1728	1777	1585	1728	1777	1585	1728	1777	1585	1728	1777	1585
Q Serve(g_s), s	0.8	6.8	0.0	8.1	20.7	0.0	3.4	8.6	0.0	4.8	8.0	0.0
Cycle Q Clear(g_c), s	0.8	6.8	0.0	8.1	20.7	0.0	3.4	8.6	0.0	4.8	8.0	0.0
Prop In Lane	1.00		1.00	1.00		1.00	1.00		1.00	1.00		1.00
Lane Grp Cap(c), veh/h	110	868		432	1199		216	1206		279	1270	
V/C Ratio(X)	0.30	0.39		0.78	0.79		0.66	0.39		0.71	0.35	
Avail Cap(c_a), veh/h	202	1164		627	1601		344	1206		384	1270	
HCM Platoon Ratio	1.00	1.00	1.00	1.00	1.00	1.00	1.00	1.00	1.00	1.00	1.00	1.00
Upstream Filter(I)	1.00	1.00	0.00	1.00	1.00	0.00	1.00	1.00	0.00	1.00	1.00	0.00
Uniform Delay (d), s/veh	40.4	27.0	0.0	36.3	25.6	0.0	39.1	21.5	0.0	38.3	20.2	0.0
Incr Delay (d2), s/veh	1.5	0.3	0.0	4.0	2.0	0.0	3.4	0.9	0.0	3.8	0.8	0.0
Initial Q Delay(d3),s/veh	0.0	0.0	0.0	0.0	0.0	0.0	0.0	0.0	0.0	0.0	0.0	0.0
%ile BackOfQ(50%),veh/ln	0.4	2.8	0.0	3.6	8.7	0.0	1.5	3.6	0.0	2.1	3.3	0.0
Unsig. Movement Delay, s/veh												
LnGrp Delay(d),s/veh	42.0	27.3	0.0	40.2	27.7	0.0	42.5	22.4	0.0	42.1	21.0	0.0
LnGrp LOS	D	C		D	C		D	C		D	C	
Approach Vol, veh/h		371	A		1289	A		610	A		649	A
Approach Delay, s/veh		28.6			31.0			27.1			27.5	
Approach LOS		C			C			C			C	

Timer - Assigned Phs	1	2	3	4	5	6	7	8
Phs Duration (G+Y+Rc), s	11.4	33.5	15.2	25.4	9.9	35.0	7.2	33.3
Change Period (Y+Rc), s	4.5	4.5	4.5	4.5	4.5	4.5	4.5	4.5
Max Green Setting (Gmax), s	9.5	29.0	15.5	28.0	8.5	30.0	5.0	38.5
Max Q Clear Time (g_c+I1), s	6.8	10.6	10.1	8.8	5.4	10.0	2.8	22.7
Green Ext Time (p_c), s	0.2	2.9	0.6	2.1	0.1	2.9	0.0	6.1

Intersection Summary	
HCM 6th Ctrl Delay	29.1
HCM 6th LOS	C

Notes

Unsignalized Delay for [NBR, EBR, WBR, SBR] is excluded from calculations of the approach delay and intersection delay.

Lane Group	WBL	WBR	NBT	NBR	SBL	SBT
Lane Group Flow (vph)	347	130	618	111	30	802
v/c Ratio	0.58	0.21	0.41	0.15	0.09	0.53
Control Delay	16.1	3.7	9.6	2.9	9.1	10.6
Queue Delay	0.0	0.0	0.0	0.0	0.0	0.0
Total Delay	16.1	3.7	9.6	2.9	9.1	10.6
Queue Length 50th (ft)	58	0	44	0	4	61
Queue Length 95th (ft)	154	26	105	22	19	142
Internal Link Dist (ft)	814		2717			2595
Turn Bay Length (ft)	250			250	400	
Base Capacity (vph)	1273	1175	2546	1170	542	2546
Starvation Cap Reductn	0	0	0	0	0	0
Spillback Cap Reductn	0	0	0	0	0	0
Storage Cap Reductn	0	0	0	0	0	0
Reduced v/c Ratio	0.27	0.11	0.24	0.09	0.06	0.32

Intersection Summary

Movement	WBL	WBR	NBT	NBR	SBL	SBT
Lane Configurations						
Traffic Volume (veh/h)	319	120	569	102	28	738
Future Volume (veh/h)	319	120	569	102	28	738
Initial Q (Qb), veh	0	0	0	0	0	0
Ped-Bike Adj(A_pbT)	1.00	1.00		1.00	1.00	
Parking Bus, Adj	1.00	1.00	1.00	1.00	1.00	1.00
Work Zone On Approach	No		No			No
Adj Sat Flow, veh/h/ln	1870	1870	1870	1870	1870	1870
Adj Flow Rate, veh/h	347	130	618	111	30	802
Peak Hour Factor	0.92	0.92	0.92	0.92	0.92	0.92
Percent Heavy Veh, %	2	2	2	2	2	2
Cap, veh/h	502	446	1515	676	456	1515
Arrive On Green	0.28	0.28	0.43	0.43	0.43	0.43
Sat Flow, veh/h	1781	1585	3647	1585	726	3647
Grp Volume(v), veh/h	347	130	618	111	30	802
Grp Sat Flow(s),veh/h/ln	1781	1585	1777	1585	726	1777
Q Serve(g_s), s	5.4	2.0	3.7	1.3	0.9	5.2
Cycle Q Clear(g_c), s	5.4	2.0	3.7	1.3	4.6	5.2
Prop In Lane	1.00	1.00		1.00	1.00	
Lane Grp Cap(c), veh/h	502	446	1515	676	456	1515
V/C Ratio(X)	0.69	0.29	0.41	0.16	0.07	0.53
Avail Cap(c_a), veh/h	1619	1440	3229	1440	806	3229
HCM Platoon Ratio	1.00	1.00	1.00	1.00	1.00	1.00
Upstream Filter(I)	1.00	1.00	1.00	1.00	1.00	1.00
Uniform Delay (d), s/veh	9.9	8.7	6.1	5.5	7.8	6.5
Incr Delay (d2), s/veh	1.7	0.4	0.2	0.1	0.1	0.3
Initial Q Delay(d3),s/veh	0.0	0.0	0.0	0.0	0.0	0.0
%ile BackOfQ(50%),veh/ln	1.6	0.5	0.8	0.3	0.1	1.1
Unsig. Movement Delay, s/veh						
LnGrp Delay(d),s/veh	11.6	9.0	6.3	5.6	7.8	6.8
LnGrp LOS	B	A	A	A	A	A
Approach Vol, veh/h	477		729			832
Approach Delay, s/veh	10.9		6.2			6.9
Approach LOS	B		A			A

Timer - Assigned Phs		2				6	8
Phs Duration (G+Y+Rc), s		17.6				17.6	13.2
Change Period (Y+Rc), s		4.5				4.5	4.5
Max Green Setting (Gmax), s		28.0				28.0	28.0
Max Q Clear Time (g_c+I1), s		5.7				7.2	7.4
Green Ext Time (p_c), s		4.7				6.0	1.5

Intersection Summary	
HCM 6th Ctrl Delay	7.6
HCM 6th LOS	A

Lane Group	EBL	EBT	EBR	WBL	WBT	WBR	NBL	NBT	NBR	SBL	SBT	SBR
Lane Group Flow (vph)	173	175	48	109	325	109	110	304	22	23	177	393
v/c Ratio	0.46	0.14	0.08	0.25	0.25	0.17	0.29	0.27	0.04	0.07	0.16	0.51
Control Delay	12.2	6.9	3.2	8.7	7.3	2.8	11.1	8.9	4.5	9.0	8.5	4.2
Queue Delay	0.0	0.0	0.0	0.0	0.0	0.0	0.0	0.0	0.0	0.0	0.0	0.0
Total Delay	12.2	6.9	3.2	8.7	7.3	2.8	11.1	8.9	4.5	9.0	8.5	4.2
Queue Length 50th (ft)	16	7	0	9	14	0	11	15	0	2	8	0
Queue Length 95th (ft)	65	25	12	39	43	19	45	47	9	14	30	40
Internal Link Dist (ft)		726			925			690			2070	
Turn Bay Length (ft)	300		275	300		275	300		275	300		500
Base Capacity (vph)	930	3183	1428	1074	3183	1435	1072	3183	1426	949	3183	1463
Starvation Cap Reductn	0	0	0	0	0	0	0	0	0	0	0	0
Spillback Cap Reductn	0	0	0	0	0	0	0	0	0	0	0	0
Storage Cap Reductn	0	0	0	0	0	0	0	0	0	0	0	0
Reduced v/c Ratio	0.19	0.05	0.03	0.10	0.10	0.08	0.10	0.10	0.02	0.02	0.06	0.27

Intersection Summary

Movement	EBL	EBT	EBR	WBL	WBT	WBR	NBL	NBT	NBR	SBL	SBT	SBR
Lane Configurations												
Traffic Volume (veh/h)	159	161	44	100	299	100	101	280	20	21	163	362
Future Volume (veh/h)	159	161	44	100	299	100	101	280	20	21	163	362
Initial Q (Qb), veh	0	0	0	0	0	0	0	0	0	0	0	0
Ped-Bike Adj(A_pbT)	1.00		1.00	1.00		1.00	1.00		1.00	1.00		1.00
Parking Bus, Adj	1.00	1.00	1.00	1.00	1.00	1.00	1.00	1.00	1.00	1.00	1.00	1.00
Work Zone On Approach		No			No			No			No	
Adj Sat Flow, veh/h/ln	1870	1870	1870	1870	1870	1870	1870	1870	1870	1870	1870	1870
Adj Flow Rate, veh/h	173	175	48	109	325	109	110	304	22	23	177	393
Peak Hour Factor	0.92	0.92	0.92	0.92	0.92	0.92	0.92	0.92	0.92	0.92	0.92	0.92
Percent Heavy Veh, %	2	2	2	2	2	2	2	2	2	2	2	2
Cap, veh/h	506	1253	559	601	1253	559	504	1274	568	546	1274	568
Arrive On Green	0.35	0.35	0.35	0.35	0.35	0.35	0.36	0.36	0.36	0.36	0.36	0.36
Sat Flow, veh/h	954	3554	1585	1158	3554	1585	842	3554	1585	1054	3554	1585
Grp Volume(v), veh/h	173	175	48	109	325	109	110	304	22	23	177	393
Grp Sat Flow(s),veh/h/ln	954	1777	1585	1158	1777	1585	842	1777	1585	1054	1777	1585
Q Serve(g_s), s	4.9	1.0	0.6	2.2	2.0	1.5	3.2	1.9	0.3	0.5	1.0	6.6
Cycle Q Clear(g_c), s	6.9	1.0	0.6	3.2	2.0	1.5	4.2	1.9	0.3	2.4	1.0	6.6
Prop In Lane	1.00		1.00	1.00		1.00	1.00		1.00	1.00		1.00
Lane Grp Cap(c), veh/h	506	1253	559	601	1253	559	504	1274	568	546	1274	568
V/C Ratio(X)	0.34	0.14	0.09	0.18	0.26	0.19	0.22	0.24	0.04	0.04	0.14	0.69
Avail Cap(c_a), veh/h	1027	3194	1425	1233	3194	1425	959	3194	1425	1115	3194	1425
HCM Platoon Ratio	1.00	1.00	1.00	1.00	1.00	1.00	1.00	1.00	1.00	1.00	1.00	1.00
Upstream Filter(I)	1.00	1.00	1.00	1.00	1.00	1.00	1.00	1.00	1.00	1.00	1.00	1.00
Uniform Delay (d), s/veh	9.7	6.9	6.7	8.0	7.2	7.0	8.2	7.0	6.5	7.8	6.7	8.5
Incr Delay (d2), s/veh	0.4	0.1	0.1	0.1	0.1	0.2	0.2	0.1	0.0	0.0	0.0	1.5
Initial Q Delay(d3),s/veh	0.0	0.0	0.0	0.0	0.0	0.0	0.0	0.0	0.0	0.0	0.0	0.0
%ile BackOfQ(50%),veh/ln	0.7	0.3	0.1	0.4	0.5	0.3	0.4	0.5	0.1	0.1	0.3	1.6
Unsig. Movement Delay, s/veh												
LnGrp Delay(d),s/veh	10.1	6.9	6.8	8.1	7.3	7.2	8.4	7.1	6.5	7.9	6.8	10.0
LnGrp LOS	B	A	A	A	A	A	A	A	A	A	A	B
Approach Vol, veh/h		396			543			436			593	
Approach Delay, s/veh		8.3			7.4			7.4			9.0	
Approach LOS		A			A			A			A	

Timer - Assigned Phs	2	4	6	8
Phs Duration (G+Y+Rc), s	15.7	15.5	15.7	15.5
Change Period (Y+Rc), s	4.5	4.5	4.5	4.5
Max Green Setting (Gmax), s	28.0	28.0	28.0	28.0
Max Q Clear Time (g_c+I1), s	6.2	8.9	8.6	5.2
Green Ext Time (p_c), s	2.7	2.0	2.6	2.9

Intersection Summary	
HCM 6th Ctrl Delay	8.1
HCM 6th LOS	A

Lane Group	EBL	EBT	EBR	WBL	WBT	WBR	NBT	NBR	SBT	SBR
Lane Group Flow (vph)	100	317	16	3	789	35	51	11	68	257
v/c Ratio	0.37	0.20	0.02	0.01	0.50	0.05	0.13	0.02	0.18	0.50
Control Delay	11.8	6.6	2.7	6.3	8.4	3.1	11.6	3.4	12.0	11.2
Queue Delay	0.0	0.0	0.0	0.0	0.0	0.0	0.0	0.0	0.0	0.0
Total Delay	11.8	6.6	2.7	6.3	8.4	3.1	11.6	3.4	12.0	11.2
Queue Length 50th (ft)	10	15	0	0	45	0	7	0	9	22
Queue Length 95th (ft)	46	43	6	3	110	10	29	5	37	85
Internal Link Dist (ft)		2031			726		424		476	
Turn Bay Length (ft)	485		275	235		275				
Base Capacity (vph)	500	2907	1304	856	2907	1306	1110	1304	1097	1317
Starvation Cap Reductn	0	0	0	0	0	0	0	0	0	0
Spillback Cap Reductn	0	0	0	0	0	0	0	0	0	0
Storage Cap Reductn	0	0	0	0	0	0	0	0	0	0
Reduced v/c Ratio	0.20	0.11	0.01	0.00	0.27	0.03	0.05	0.01	0.06	0.20

Intersection Summary

Movement	EBL	EBT	EBR	WBL	WBT	WBR	NBL	NBT	NBR	SBL	SBT	SBR
Lane Configurations												
Traffic Volume (veh/h)	92	292	15	3	726	32	45	2	10	61	2	236
Future Volume (veh/h)	92	292	15	3	726	32	45	2	10	61	2	236
Initial Q (Qb), veh	0	0	0	0	0	0	0	0	0	0	0	0
Ped-Bike Adj(A_pbT)	1.00		1.00	1.00		1.00	1.00		1.00	1.00		1.00
Parking Bus, Adj	1.00	1.00	1.00	1.00	1.00	1.00	1.00	1.00	1.00	1.00	1.00	1.00
Work Zone On Approach		No			No			No			No	
Adj Sat Flow, veh/h/ln	1870	1870	1870	1870	1870	1870	1870	1870	1870	1870	1870	1870
Adj Flow Rate, veh/h	100	317	16	3	789	35	49	2	11	66	2	257
Peak Hour Factor	0.92	0.92	0.92	0.92	0.92	0.92	0.92	0.92	0.92	0.92	0.92	0.92
Percent Heavy Veh, %	2	2	2	2	2	2	2	2	2	2	2	2
Cap, veh/h	251	1333	595	445	1333	595	129	3	748	132	2	748
Arrive On Green	0.38	0.38	0.38	0.38	0.38	0.38	0.47	0.47	0.47	0.47	0.47	0.47
Sat Flow, veh/h	665	3554	1585	1047	3554	1585	20	6	1585	25	5	1585
Grp Volume(v), veh/h	100	317	16	3	789	35	51	0	11	68	0	257
Grp Sat Flow(s),veh/h/ln	665	1777	1585	1047	1777	1585	26	0	1585	30	0	1585
Q Serve(g_s), s	8.4	3.6	0.4	0.1	10.5	0.8	0.5	0.0	0.2	0.5	0.0	6.0
Cycle Q Clear(g_c), s	19.1	3.6	0.4	4.1	10.5	0.8	27.8	0.0	0.2	27.8	0.0	6.0
Prop In Lane	1.00		1.00	1.00		1.00	0.96		1.00	0.97		1.00
Lane Grp Cap(c), veh/h	251	1333	595	445	1333	595	132	0	748	135	0	748
V/C Ratio(X)	0.40	0.24	0.03	0.01	0.59	0.06	0.38	0.00	0.01	0.50	0.00	0.34
Avail Cap(c_a), veh/h	318	1692	755	550	1692	755	137	0	755	141	0	755
HCM Platoon Ratio	1.00	1.00	1.00	1.00	1.00	1.00	1.00	1.00	1.00	1.00	1.00	1.00
Upstream Filter(I)	1.00	1.00	1.00	1.00	1.00	1.00	1.00	0.00	1.00	1.00	0.00	1.00
Uniform Delay (d), s/veh	22.5	12.6	11.6	14.1	14.8	11.7	28.0	0.0	8.3	28.6	0.0	9.8
Incr Delay (d2), s/veh	1.0	0.1	0.0	0.0	0.4	0.0	1.8	0.0	0.0	2.9	0.0	0.3
Initial Q Delay(d3),s/veh	0.0	0.0	0.0	0.0	0.0	0.0	0.0	0.0	0.0	0.0	0.0	0.0
%ile BackOfQ(50%),veh/ln	1.3	1.3	0.1	0.0	3.8	0.3	0.8	0.0	0.1	1.0	0.0	1.8
Unsig. Movement Delay, s/veh												
LnGrp Delay(d),s/veh	23.5	12.7	11.6	14.1	15.2	11.8	29.8	0.0	8.3	31.5	0.0	10.1
LnGrp LOS	C	B	B	B	B	B	C	A	A	C	A	B
Approach Vol, veh/h		433			827			62			325	
Approach Delay, s/veh		15.2			15.0			26.0			14.5	
Approach LOS		B			B			C			B	

Timer - Assigned Phs		2		4		6		8				
Phs Duration (G+Y+Rc), s		32.4		26.9		32.4		26.9				
Change Period (Y+Rc), s		4.5		4.5		4.5		4.5				
Max Green Setting (Gmax), s		28.0		28.0		28.0		28.0				
Max Q Clear Time (g_c+I1), s		29.8		21.1		29.8		12.5				
Green Ext Time (p_c), s		0.0		1.6		0.0		5.1				

Intersection Summary												
HCM 6th Ctrl Delay			15.4									
HCM 6th LOS			B									

Lane Group	EBL	EBT	EBR	WBL	WBT	WBR	NBL	NBT	NBR	SBL	SBT	SBR
Lane Group Flow (vph)	26	191	22	11	271	7	54	5	11	16	5	85
v/c Ratio	0.06	0.16	0.04	0.03	0.23	0.01	0.09	0.00	0.02	0.03	0.00	0.12
Control Delay	5.9	6.0	2.9	5.6	6.2	1.2	6.9	6.2	2.1	6.5	6.2	2.7
Queue Delay	0.0	0.0	0.0	0.0	0.0	0.0	0.0	0.0	0.0	0.0	0.0	0.0
Total Delay	5.9	6.0	2.9	5.6	6.2	1.2	6.9	6.2	2.1	6.5	6.2	2.7
Queue Length 50th (ft)	2	6	0	1	10	0	4	0	0	1	0	0
Queue Length 95th (ft)	8	15	5	5	21	1	15	1	3	6	1	11
Internal Link Dist (ft)		2061			2031			426			951	
Turn Bay Length (ft)	325		275	275		275	250		275	250		275
Base Capacity (vph)	1308	3539	1583	1308	3539	1583	1405	3539	1583	1405	3539	1583
Starvation Cap Reductn	0	0	0	0	0	0	0	0	0	0	0	0
Spillback Cap Reductn	0	0	0	0	0	0	0	0	0	0	0	0
Storage Cap Reductn	0	0	0	0	0	0	0	0	0	0	0	0
Reduced v/c Ratio	0.02	0.05	0.01	0.01	0.08	0.00	0.04	0.00	0.01	0.01	0.00	0.05

Intersection Summary

Movement	EBL	EBT	EBR	WBL	WBT	WBR	NBL	NBT	NBR	SBL	SBT	SBR
Lane Configurations												
Traffic Volume (veh/h)	24	176	20	10	249	6	50	5	10	15	5	78
Future Volume (veh/h)	24	176	20	10	249	6	50	5	10	15	5	78
Initial Q (Qb), veh	0	0	0	0	0	0	0	0	0	0	0	0
Ped-Bike Adj(A_pbT)	1.00		1.00	1.00		1.00	1.00		1.00	1.00		1.00
Parking Bus, Adj	1.00	1.00	1.00	1.00	1.00	1.00	1.00	1.00	1.00	1.00	1.00	1.00
Work Zone On Approach		No			No			No			No	
Adj Sat Flow, veh/h/ln	1870	1870	1870	1870	1870	1870	1870	1870	1870	1870	1870	1870
Adj Flow Rate, veh/h	26	191	22	11	271	7	54	5	11	16	5	85
Peak Hour Factor	0.92	0.92	0.92	0.92	0.92	0.92	0.92	0.92	0.92	0.92	0.92	0.92
Percent Heavy Veh, %	2	2	2	2	2	2	2	2	2	2	2	2
Cap, veh/h	593	890	397	628	890	397	734	951	424	758	951	424
Arrive On Green	0.25	0.25	0.25	0.25	0.25	0.25	0.27	0.27	0.27	0.27	0.27	0.27
Sat Flow, veh/h	1101	3554	1585	1168	3554	1585	1307	3554	1585	1397	3554	1585
Grp Volume(v), veh/h	26	191	22	11	271	7	54	5	11	16	5	85
Grp Sat Flow(s),veh/h/ln	1101	1777	1585	1168	1777	1585	1307	1777	1585	1397	1777	1585
Q Serve(g_s), s	0.4	0.8	0.2	0.1	1.2	0.1	0.6	0.0	0.1	0.2	0.0	0.8
Cycle Q Clear(g_c), s	1.5	0.8	0.2	0.9	1.2	0.1	0.6	0.0	0.1	0.2	0.0	0.8
Prop In Lane	1.00		1.00	1.00		1.00	1.00		1.00	1.00		1.00
Lane Grp Cap(c), veh/h	593	890	397	628	890	397	734	951	424	758	951	424
V/C Ratio(X)	0.04	0.21	0.06	0.02	0.30	0.02	0.07	0.01	0.03	0.02	0.01	0.20
Avail Cap(c_a), veh/h	1968	5328	2376	2088	5328	2376	2343	5328	2376	2479	5328	2376
HCM Platoon Ratio	1.00	1.00	1.00	1.00	1.00	1.00	1.00	1.00	1.00	1.00	1.00	1.00
Upstream Filter(I)	1.00	1.00	1.00	1.00	1.00	1.00	1.00	1.00	1.00	1.00	1.00	1.00
Uniform Delay (d), s/veh	6.3	5.5	5.3	5.9	5.7	5.3	5.2	5.0	5.0	5.1	5.0	5.3
Incr Delay (d2), s/veh	0.0	0.1	0.1	0.0	0.2	0.0	0.0	0.0	0.0	0.0	0.0	0.2
Initial Q Delay(d3),s/veh	0.0	0.0	0.0	0.0	0.0	0.0	0.0	0.0	0.0	0.0	0.0	0.0
%ile BackOfQ(50%),veh/ln	0.0	0.1	0.0	0.0	0.2	0.0	0.1	0.0	0.0	0.0	0.0	0.1
Unsig. Movement Delay, s/veh												
LnGrp Delay(d),s/veh	6.3	5.7	5.4	5.9	5.9	5.3	5.3	5.0	5.1	5.1	5.0	5.5
LnGrp LOS	A	A	A	A	A	A	A	A	A	A	A	A
Approach Vol, veh/h		239			289			70			106	
Approach Delay, s/veh		5.7			5.9			5.2			5.4	
Approach LOS		A			A			A			A	

Timer - Assigned Phs		2		4		6		8				
Phs Duration (G+Y+Rc), s		9.5		9.2		9.5		9.2				
Change Period (Y+Rc), s		4.5		4.5		4.5		4.5				
Max Green Setting (Gmax), s		28.0		28.0		28.0		28.0				
Max Q Clear Time (g_c+I1), s		2.6		3.5		2.8		3.2				
Green Ext Time (p_c), s		0.2		1.3		0.3		1.8				

Intersection Summary												
HCM 6th Ctrl Delay			5.7									
HCM 6th LOS			A									

Lane Group	EBL	EBT	EBR	WBL	WBT	WBR	NBL	NBT	NBR	SBL	SBT	SBR
Lane Group Flow (vph)	66	213	27	16	355	12	109	11	16	12	11	124
v/c Ratio	0.20	0.18	0.05	0.04	0.30	0.02	0.26	0.02	0.03	0.03	0.02	0.22
Control Delay	7.9	6.5	3.3	6.3	7.1	1.9	8.8	6.8	2.9	6.9	6.8	3.1
Queue Delay	0.0	0.0	0.0	0.0	0.0	0.0	0.0	0.0	0.0	0.0	0.0	0.0
Total Delay	7.9	6.5	3.3	6.3	7.1	1.9	8.8	6.8	2.9	6.9	6.8	3.1
Queue Length 50th (ft)	5	8	0	1	14	0	9	1	0	1	1	0
Queue Length 95th (ft)	19	21	7	7	33	3	30	6	5	6	6	16
Internal Link Dist (ft)		1938			2061			478			615	
Turn Bay Length (ft)	300		275	275		250	275		275	275		125
Base Capacity (vph)	875	3084	1383	1003	3084	1383	1385	1847	1570	1385	1847	1571
Starvation Cap Reductn	0	0	0	0	0	0	0	0	0	0	0	0
Spillback Cap Reductn	0	0	0	0	0	0	0	0	0	0	0	0
Storage Cap Reductn	0	0	0	0	0	0	0	0	0	0	0	0
Reduced v/c Ratio	0.08	0.07	0.02	0.02	0.12	0.01	0.08	0.01	0.01	0.01	0.01	0.08

Intersection Summary

Movement	EBL	EBT	EBR	WBL	WBT	WBR	NBL	NBT	NBR	SBL	SBT	SBR
Lane Configurations												
Traffic Volume (veh/h)	61	196	25	15	327	11	100	10	15	11	10	114
Future Volume (veh/h)	61	196	25	15	327	11	100	10	15	11	10	114
Initial Q (Qb), veh	0	0	0	0	0	0	0	0	0	0	0	0
Ped-Bike Adj(A_pbT)	1.00		1.00	1.00		1.00	1.00		1.00	1.00		1.00
Parking Bus, Adj	1.00	1.00	1.00	1.00	1.00	1.00	1.00	1.00	1.00	1.00	1.00	1.00
Work Zone On Approach		No			No			No			No	
Adj Sat Flow, veh/h/ln	1870	1870	1870	1870	1870	1870	1870	1870	1870	1870	1870	1870
Adj Flow Rate, veh/h	66	213	27	16	355	12	109	11	16	12	11	124
Peak Hour Factor	0.92	0.92	0.92	0.92	0.92	0.92	0.92	0.92	0.92	0.92	0.92	0.92
Percent Heavy Veh, %	2	2	2	2	2	2	2	2	2	2	2	2
Cap, veh/h	586	1071	478	652	1071	478	667	467	396	698	467	396
Arrive On Green	0.30	0.30	0.30	0.30	0.30	0.30	0.25	0.25	0.25	0.25	0.25	0.25
Sat Flow, veh/h	1015	3554	1585	1140	3554	1585	1254	1870	1585	1383	1870	1585
Grp Volume(v), veh/h	66	213	27	16	355	12	109	11	16	12	11	124
Grp Sat Flow(s),veh/h/ln	1015	1777	1585	1140	1777	1585	1254	1870	1585	1383	1870	1585
Q Serve(g_s), s	1.1	0.9	0.2	0.2	1.6	0.1	1.4	0.1	0.2	0.1	0.1	1.3
Cycle Q Clear(g_c), s	2.6	0.9	0.2	1.1	1.6	0.1	1.5	0.1	0.2	0.2	0.1	1.3
Prop In Lane	1.00		1.00	1.00		1.00	1.00		1.00	1.00		1.00
Lane Grp Cap(c), veh/h	586	1071	478	652	1071	478	667	467	396	698	467	396
V/C Ratio(X)	0.11	0.20	0.06	0.02	0.33	0.03	0.16	0.02	0.04	0.02	0.02	0.31
Avail Cap(c_a), veh/h	1370	3813	1701	1532	3813	1701	2201	2754	2334	2390	2754	2334
HCM Platoon Ratio	1.00	1.00	1.00	1.00	1.00	1.00	1.00	1.00	1.00	1.00	1.00	1.00
Upstream Filter(I)	1.00	1.00	1.00	1.00	1.00	1.00	1.00	1.00	1.00	1.00	1.00	1.00
Uniform Delay (d), s/veh	6.5	5.2	5.0	5.6	5.4	4.9	6.3	5.7	5.7	5.8	5.7	6.1
Incr Delay (d2), s/veh	0.1	0.1	0.0	0.0	0.2	0.0	0.1	0.0	0.0	0.0	0.0	0.4
Initial Q Delay(d3),s/veh	0.0	0.0	0.0	0.0	0.0	0.0	0.0	0.0	0.0	0.0	0.0	0.0
%ile BackOfQ(50%),veh/ln	0.1	0.1	0.0	0.0	0.2	0.0	0.2	0.0	0.0	0.0	0.0	0.2
Unsig. Movement Delay, s/veh												
LnGrp Delay(d),s/veh	6.5	5.3	5.0	5.6	5.6	4.9	6.4	5.7	5.7	5.8	5.7	6.6
LnGrp LOS	A	A	A	A	A	A	A	A	A	A	A	A
Approach Vol, veh/h		306			383			136			147	
Approach Delay, s/veh		5.5			5.6			6.2			6.4	
Approach LOS		A			A			A			A	

Timer - Assigned Phs	2	4	6	8
Phs Duration (G+Y+Rc), s	9.5	10.5	9.5	10.5
Change Period (Y+Rc), s	4.5	4.5	4.5	4.5
Max Green Setting (Gmax), s	29.5	21.5	29.5	21.5
Max Q Clear Time (g_c+I1), s	3.5	4.6	3.3	3.6
Green Ext Time (p_c), s	0.4	1.5	0.5	2.2

Intersection Summary	
HCM 6th Ctrl Delay	5.8
HCM 6th LOS	A

Lane Group	WBL	WBR	NBT	NBR	SBL	SBT
Lane Group Flow (vph)	860	527	585	300	185	930
v/c Ratio	0.83	0.75	0.44	0.38	0.44	0.48
Control Delay	28.1	15.1	15.2	3.5	10.5	9.5
Queue Delay	0.0	0.0	0.0	0.0	0.0	0.0
Total Delay	28.1	15.1	15.2	3.5	10.5	9.5
Queue Length 50th (ft)	145	56	80	0	31	99
Queue Length 95th (ft)	#233	#183	120	41	59	140
Internal Link Dist (ft)	1938		1222			1449
Turn Bay Length (ft)	325			150	1000	
Base Capacity (vph)	1068	718	1340	786	425	1935
Starvation Cap Reductn	0	0	0	0	0	0
Spillback Cap Reductn	0	0	0	0	0	0
Storage Cap Reductn	0	0	0	0	0	0
Reduced v/c Ratio	0.81	0.73	0.44	0.38	0.44	0.48

Intersection Summary

95th percentile volume exceeds capacity, queue may be longer.
Queue shown is maximum after two cycles.

Movement	WBL	WBR	NBT	NBR	SBL	SBT
Lane Configurations						
Traffic Volume (veh/h)	791	485	538	276	170	856
Future Volume (veh/h)	791	485	538	276	170	856
Initial Q (Qb), veh	0	0	0	0	0	0
Ped-Bike Adj(A_pbT)	1.00	1.00		1.00	1.00	
Parking Bus, Adj	1.00	1.00	1.00	1.00	1.00	1.00
Work Zone On Approach	No		No			No
Adj Sat Flow, veh/h/ln	1870	1870	1870	1870	1870	1870
Adj Flow Rate, veh/h	860	527	585	300	185	930
Peak Hour Factor	0.92	0.92	0.92	0.92	0.92	0.92
Percent Heavy Veh, %	2	2	2	2	2	2
Cap, veh/h	1066	489	1349	602	437	1925
Arrive On Green	0.31	0.31	0.38	0.38	0.09	0.54
Sat Flow, veh/h	3456	1585	3647	1585	1781	3647
Grp Volume(v), veh/h	860	527	585	300	185	930
Grp Sat Flow(s),veh/h/ln	1728	1585	1777	1585	1781	1777
Q Serve(g_s), s	13.7	18.5	7.3	8.7	3.5	9.7
Cycle Q Clear(g_c), s	13.7	18.5	7.3	8.7	3.5	9.7
Prop In Lane	1.00	1.00		1.00	1.00	
Lane Grp Cap(c), veh/h	1066	489	1349	602	437	1925
V/C Ratio(X)	0.81	1.08	0.43	0.50	0.42	0.48
Avail Cap(c_a), veh/h	1066	489	1349	602	445	1925
HCM Platoon Ratio	1.00	1.00	1.00	1.00	1.00	1.00
Upstream Filter(I)	1.00	1.00	1.00	1.00	1.00	1.00
Uniform Delay (d), s/veh	19.1	20.8	13.8	14.2	9.4	8.5
Incr Delay (d2), s/veh	4.7	63.4	1.0	2.9	0.7	0.9
Initial Q Delay(d3),s/veh	0.0	0.0	0.0	0.0	0.0	0.0
%ile BackOfQ(50%),veh/ln	5.6	14.7	2.8	3.2	1.2	3.2
Unsig. Movement Delay, s/veh						
LnGrp Delay(d),s/veh	23.8	84.2	14.8	17.2	10.1	9.4
LnGrp LOS	C	F	B	B	B	A
Approach Vol, veh/h	1387		885			1115
Approach Delay, s/veh	46.7		15.6			9.5
Approach LOS	D		B			A

Timer - Assigned Phs	1	2				6	8
Phs Duration (G+Y+Rc), s	9.7	27.3				37.0	23.0
Change Period (Y+Rc), s	4.5	4.5				4.5	4.5
Max Green Setting (Gmax), s	5.5	22.5				32.5	18.5
Max Q Clear Time (g_c+I1), s	5.5	10.7				11.7	20.5
Green Ext Time (p_c), s	0.0	4.0				6.8	0.0

Intersection Summary	
HCM 6th Ctrl Delay	26.4
HCM 6th LOS	C

Lane Group	WBL	WBR	NBT	NBR	SBL	SBT
Lane Group Flow (vph)	860	527	585	300	185	930
v/c Ratio	0.85	0.63	0.46	0.19	0.41	0.48
Control Delay	29.2	12.4	16.3	0.3	9.9	9.3
Queue Delay	0.0	0.0	0.0	0.0	0.0	0.0
Total Delay	29.2	12.4	16.3	0.3	9.9	9.3
Queue Length 50th (ft)	146	94	84	0	31	98
Queue Length 95th (ft)	#235	184	125	0	58	138
Internal Link Dist (ft)	1938		1222			1449
Turn Bay Length (ft)	325			150	1000	
Base Capacity (vph)	1060	840	1272	1583	453	1952
Starvation Cap Reductn	0	0	0	0	0	0
Spillback Cap Reductn	0	0	0	0	0	0
Storage Cap Reductn	0	0	0	0	0	0
Reduced v/c Ratio	0.81	0.63	0.46	0.19	0.41	0.48

Intersection Summary

95th percentile volume exceeds capacity, queue may be longer.
Queue shown is maximum after two cycles.

Movement	WBL	WBR	NBT	NBR	SBL	SBT
Lane Configurations						
Traffic Volume (veh/h)	791	485	538	276	170	856
Future Volume (veh/h)	791	485	538	276	170	856
Initial Q (Qb), veh	0	0	0	0	0	0
Ped-Bike Adj(A_pbT)	1.00	1.00		1.00	1.00	
Parking Bus, Adj	1.00	1.00	1.00	1.00	1.00	1.00
Work Zone On Approach	No		No			No
Adj Sat Flow, veh/h/ln	1870	1870	1870	1870	1870	1870
Adj Flow Rate, veh/h	860	527	585	0	185	930
Peak Hour Factor	0.92	0.92	0.92	0.92	0.92	0.92
Percent Heavy Veh, %	2	2	2	2	2	2
Cap, veh/h	1054	623	1357		493	1937
Arrive On Green	0.30	0.30	0.38	0.00	0.09	0.54
Sat Flow, veh/h	3456	1585	3647	1585	1781	3647
Grp Volume(v), veh/h	860	527	585	0	185	930
Grp Sat Flow(s),veh/h/ln	1728	1585	1777	1585	1781	1777
Q Serve(g_s), s	13.8	18.1	7.3	0.0	3.5	9.7
Cycle Q Clear(g_c), s	13.8	18.1	7.3	0.0	3.5	9.7
Prop In Lane	1.00	1.00		1.00	1.00	
Lane Grp Cap(c), veh/h	1054	623	1357		493	1937
V/C Ratio(X)	0.82	0.85	0.43		0.38	0.48
Avail Cap(c_a), veh/h	1054	623	1357		547	1937
HCM Platoon Ratio	1.00	1.00	1.00	1.00	1.00	1.00
Upstream Filter(I)	1.00	1.00	1.00	0.00	1.00	1.00
Uniform Delay (d), s/veh	19.3	16.6	13.7	0.0	9.2	8.4
Incr Delay (d2), s/veh	5.1	10.5	1.0	0.0	0.5	0.9
Initial Q Delay(d3),s/veh	0.0	0.0	0.0	0.0	0.0	0.0
%ile BackOfQ(50%),veh/ln	5.7	7.5	2.8	0.0	1.2	3.2
Unsig. Movement Delay, s/veh						
LnGrp Delay(d),s/veh	24.4	27.0	14.7	0.0	9.7	9.3
LnGrp LOS	C	C	B		A	A
Approach Vol, veh/h	1387		585	A		1115
Approach Delay, s/veh	25.4		14.7			9.3
Approach LOS	C		B			A

Timer - Assigned Phs	1	2				6	8
Phs Duration (G+Y+Rc), s	9.8	27.4				37.2	22.8
Change Period (Y+Rc), s	4.5	4.5				4.5	4.5
Max Green Setting (Gmax), s	7.1	21.1				32.7	18.3
Max Q Clear Time (g_c+I1), s	5.5	9.3				11.7	20.1
Green Ext Time (p_c), s	0.1	3.1				6.9	0.0

Intersection Summary	
HCM 6th Ctrl Delay	17.6
HCM 6th LOS	B

Notes

Unsignalized Delay for [NBR] is excluded from calculations of the approach delay and intersection delay.

Lane Group	EBL	EBT	EBR	WBL	WBT	WBR	NBL	NBT	NBR	SBL	SBT	SBR
Lane Group Flow (vph)	168	247	95	126	185	62	52	533	135	59	658	239
v/c Ratio	0.46	0.33	0.21	0.35	0.31	0.16	0.14	0.39	0.19	0.14	0.48	0.31
Control Delay	19.0	21.8	3.5	17.0	22.1	1.2	8.8	14.5	4.1	8.7	15.4	3.8
Queue Delay	0.0	0.0	0.0	0.0	0.0	0.0	0.0	0.0	0.0	0.0	0.0	0.0
Total Delay	19.0	21.8	3.5	17.0	22.1	1.2	8.8	14.5	4.1	8.7	15.4	3.8
Queue Length 50th (ft)	43	41	0	31	30	0	8	72	0	9	92	0
Queue Length 95th (ft)	83	71	19	64	55	3	24	119	31	27	149	40
Internal Link Dist (ft)		911			760			1157			1874	
Turn Bay Length (ft)	235		450	200		400	700		600			490
Base Capacity (vph)	369	2380	1108	358	2380	1108	372	1367	695	427	1371	759
Starvation Cap Reductn	0	0	0	0	0	0	0	0	0	0	0	0
Spillback Cap Reductn	0	0	0	0	0	0	0	0	0	0	0	0
Storage Cap Reductn	0	0	0	0	0	0	0	0	0	0	0	0
Reduced v/c Ratio	0.46	0.10	0.09	0.35	0.08	0.06	0.14	0.39	0.19	0.14	0.48	0.31

Intersection Summary

Movement	EBL	EBT	EBR	WBL	WBT	WBR	NBL	NBT	NBR	SBL	SBT	SBR
Lane Configurations												
Traffic Volume (veh/h)	155	227	87	116	170	57	48	490	124	54	605	220
Future Volume (veh/h)	155	227	87	116	170	57	48	490	124	54	605	220
Initial Q (Qb), veh	0	0	0	0	0	0	0	0	0	0	0	0
Ped-Bike Adj(A_pbT)	1.00		1.00	1.00		1.00	1.00		1.00	1.00		1.00
Parking Bus, Adj	1.00	1.00	1.00	1.00	1.00	1.00	1.00	1.00	1.00	1.00	1.00	1.00
Work Zone On Approach		No			No			No			No	
Adj Sat Flow, veh/h/ln	1870	1870	1870	1870	1870	1870	1870	1870	1870	1870	1870	1870
Adj Flow Rate, veh/h	168	247	0	126	185	0	52	533	0	59	658	0
Peak Hour Factor	0.92	0.92	0.92	0.92	0.92	0.92	0.92	0.92	0.92	0.92	0.92	0.92
Percent Heavy Veh, %	2	2	2	2	2	2	2	2	2	2	2	2
Cap, veh/h	393	474		361	428		424	1385		479	1401	
Arrive On Green	0.10	0.13	0.00	0.08	0.12	0.00	0.05	0.39	0.00	0.05	0.39	0.00
Sat Flow, veh/h	1781	3554	1585	1781	3554	1585	1781	3554	1585	1781	3554	1585
Grp Volume(v), veh/h	168	247	0	126	185	0	52	533	0	59	658	0
Grp Sat Flow(s),veh/h/ln	1781	1777	1585	1781	1777	1585	1781	1777	1585	1781	1777	1585
Q Serve(g_s), s	4.3	3.4	0.0	3.2	2.6	0.0	0.9	5.7	0.0	1.0	7.3	0.0
Cycle Q Clear(g_c), s	4.3	3.4	0.0	3.2	2.6	0.0	0.9	5.7	0.0	1.0	7.3	0.0
Prop In Lane	1.00		1.00	1.00		1.00	1.00		1.00	1.00		1.00
Lane Grp Cap(c), veh/h	393	474		361	428		424	1385		479	1401	
V/C Ratio(X)	0.43	0.52		0.35	0.43		0.12	0.38		0.12	0.47	
Avail Cap(c_a), veh/h	393	2416		385	2416		502	1385		553	1401	
HCM Platoon Ratio	1.00	1.00	1.00	1.00	1.00	1.00	1.00	1.00	1.00	1.00	1.00	1.00
Upstream Filter(I)	1.00	1.00	0.00	1.00	1.00	0.00	1.00	1.00	0.00	1.00	1.00	0.00
Uniform Delay (d), s/veh	18.1	21.4	0.0	18.2	21.7	0.0	9.1	11.6	0.0	8.8	12.0	0.0
Incr Delay (d2), s/veh	0.7	0.9	0.0	0.6	0.7	0.0	0.1	0.8	0.0	0.1	1.1	0.0
Initial Q Delay(d3),s/veh	0.0	0.0	0.0	0.0	0.0	0.0	0.0	0.0	0.0	0.0	0.0	0.0
%ile BackOfQ(50%),veh/ln	1.7	1.4	0.0	1.3	1.0	0.0	0.3	2.1	0.0	0.3	2.7	0.0
Unsig. Movement Delay, s/veh												
LnGrp Delay(d),s/veh	18.8	22.3	0.0	18.8	22.4	0.0	9.2	12.4	0.0	8.9	13.1	0.0
LnGrp LOS	B	C		B	C		A	B		A	B	
Approach Vol, veh/h		415	A		311	A		585	A		717	A
Approach Delay, s/veh		20.9			20.9			12.1			12.7	
Approach LOS		C			C			B			B	

Timer - Assigned Phs	1	2	3	4	5	6	7	8
Phs Duration (G+Y+Rc), s	7.4	25.2	8.9	11.6	7.2	25.4	9.6	10.9
Change Period (Y+Rc), s	4.5	4.5	4.5	4.5	4.5	4.5	4.5	4.5
Max Green Setting (Gmax), s	5.1	20.7	5.1	36.1	5.0	20.8	5.1	36.1
Max Q Clear Time (g_c+I1), s	3.0	7.7	5.2	5.4	2.9	9.3	6.3	4.6
Green Ext Time (p_c), s	0.0	2.9	0.0	1.6	0.0	3.4	0.0	1.2

Intersection Summary	
HCM 6th Ctrl Delay	15.5
HCM 6th LOS	B

Notes

Unsignalized Delay for [NBR, EBR, WBR, SBR] is excluded from calculations of the approach delay and intersection delay.

Intersection	
Int Delay, s/veh	0.3

Movement	EBT	EBR	WBL	WBT	NBL	NBR
Lane Configurations						
Traffic Vol, veh/h	377	11	4	270	9	5
Future Vol, veh/h	377	11	4	270	9	5
Conflicting Peds, #/hr	0	0	0	0	0	0
Sign Control	Free	Free	Free	Free	Stop	Stop
RT Channelized	-	None	-	None	-	None
Storage Length	-	235	235	-	0	-
Veh in Median Storage, #	0	-	-	0	0	-
Grade, %	0	-	-	0	0	-
Peak Hour Factor	92	92	92	92	92	92
Heavy Vehicles, %	2	2	2	2	2	2
Mvmt Flow	410	12	4	293	10	5

Major/Minor	Major1		Major2		Minor1	
Conflicting Flow All	0	0	422	0	565	205
Stage 1	-	-	-	-	410	-
Stage 2	-	-	-	-	155	-
Critical Hdwy	-	-	4.14	-	6.84	6.94
Critical Hdwy Stg 1	-	-	-	-	5.84	-
Critical Hdwy Stg 2	-	-	-	-	5.84	-
Follow-up Hdwy	-	-	2.22	-	3.52	3.32
Pot Cap-1 Maneuver	-	-	1134	-	455	802
Stage 1	-	-	-	-	638	-
Stage 2	-	-	-	-	857	-
Platoon blocked, %	-	-		-		
Mov Cap-1 Maneuver	-	-	1134	-	453	802
Mov Cap-2 Maneuver	-	-	-	-	453	-
Stage 1	-	-	-	-	638	-
Stage 2	-	-	-	-	854	-

Approach	EB	WB	NB
HCM Control Delay, s	0	0.1	11.9
HCM LOS			B

Minor Lane/Major Mvmt	NBLn1	EBT	EBR	WBL	WBT
Capacity (veh/h)	536	-	-	1134	-
HCM Lane V/C Ratio	0.028	-	-	0.004	-
HCM Control Delay (s)	11.9	-	-	8.2	-
HCM Lane LOS	B	-	-	A	-
HCM 95th %tile Q(veh)	0.1	-	-	0	-

Lane Group	EBL	EBT	EBR	WBL	WBT	WBR	NBL	NBT	NBR	SBL	SBT	SBR
Lane Group Flow (vph)	61	1125	132	266	668	387	109	202	424	633	279	57
v/c Ratio	0.40	0.95	0.17	0.90	0.48	0.35	0.53	0.25	0.27	0.93	0.21	0.07
Control Delay	65.0	56.1	4.0	88.6	29.8	2.9	65.8	39.3	0.4	69.2	26.9	1.2
Queue Delay	0.0	0.0	0.0	0.0	0.0	0.0	0.0	0.0	0.0	0.0	0.0	0.0
Total Delay	65.0	56.1	4.0	88.6	29.8	2.9	65.8	39.3	0.4	69.2	26.9	1.2
Queue Length 50th (ft)	24	454	0	109	212	19	44	69	0	257	79	0
Queue Length 95th (ft)	48	#595	36	#190	270	59	75	104	0	#365	113	8
Internal Link Dist (ft)		664			834			2595			1908	
Turn Bay Length (ft)	235		235				455		455	385		385
Base Capacity (vph)	154	1199	761	294	1390	1117	210	824	1583	686	1315	768
Starvation Cap Reductn	0	0	0	0	0	0	0	0	0	0	0	0
Spillback Cap Reductn	0	0	0	0	0	0	0	0	0	0	0	0
Storage Cap Reductn	0	0	0	0	0	0	0	0	0	0	0	0
Reduced v/c Ratio	0.40	0.94	0.17	0.90	0.48	0.35	0.52	0.25	0.27	0.92	0.21	0.07

Intersection Summary

95th percentile volume exceeds capacity, queue may be longer.
Queue shown is maximum after two cycles.

Movement	EBL	EBT	EBR	WBL	WBT	WBR	NBL	NBT	NBR	SBL	SBT	SBR
Lane Configurations												
Traffic Volume (veh/h)	56	1035	121	245	615	356	100	186	390	582	257	52
Future Volume (veh/h)	56	1035	121	245	615	356	100	186	390	582	257	52
Initial Q (Qb), veh	0	0	0	0	0	0	0	0	0	0	0	0
Ped-Bike Adj(A_pbT)	1.00		1.00	1.00		1.00	1.00		1.00	1.00		1.00
Parking Bus, Adj	1.00	1.00	1.00	1.00	1.00	1.00	1.00	1.00	1.00	1.00	1.00	1.00
Work Zone On Approach		No			No			No			No	
Adj Sat Flow, veh/h/ln	1870	1870	1870	1870	1870	1870	1870	1870	1870	1870	1870	1870
Adj Flow Rate, veh/h	61	1125	0	266	668	0	109	202	0	633	279	0
Peak Hour Factor	0.92	0.92	0.92	0.92	0.92	0.92	0.92	0.92	0.92	0.92	0.92	0.92
Percent Heavy Veh, %	2	2	2	2	2	2	2	2	2	2	2	2
Cap, veh/h	111	1191		297	1383		161	830		683	1367	
Arrive On Green	0.03	0.34	0.00	0.09	0.39	0.00	0.05	0.23	0.00	0.20	0.38	0.00
Sat Flow, veh/h	3456	3554	1585	3456	3554	1585	3456	3554	1585	3456	3554	1585
Grp Volume(v), veh/h	61	1125	0	266	668	0	109	202	0	633	279	0
Grp Sat Flow(s),veh/h/ln	1728	1777	1585	1728	1777	1585	1728	1777	1585	1728	1777	1585
Q Serve(g_s), s	2.1	37.6	0.0	9.3	17.3	0.0	3.8	5.6	0.0	22.0	6.4	0.0
Cycle Q Clear(g_c), s	2.1	37.6	0.0	9.3	17.3	0.0	3.8	5.6	0.0	22.0	6.4	0.0
Prop In Lane	1.00		1.00	1.00		1.00	1.00		1.00	1.00		1.00
Lane Grp Cap(c), veh/h	111	1191		297	1383		161	830		683	1367	
V/C Ratio(X)	0.55	0.94		0.89	0.48		0.68	0.24		0.93	0.20	
Avail Cap(c_a), veh/h	156	1208		297	1383		212	830		694	1367	
HCM Platoon Ratio	1.00	1.00	1.00	1.00	1.00	1.00	1.00	1.00	1.00	1.00	1.00	1.00
Upstream Filter(I)	1.00	1.00	0.00	1.00	1.00	0.00	1.00	1.00	0.00	1.00	1.00	0.00
Uniform Delay (d), s/veh	58.2	39.5	0.0	55.2	28.0	0.0	57.3	38.0	0.0	48.1	25.1	0.0
Incr Delay (d2), s/veh	4.2	14.5	0.0	27.3	0.3	0.0	5.3	0.7	0.0	18.4	0.3	0.0
Initial Q Delay(d3),s/veh	0.0	0.0	0.0	0.0	0.0	0.0	0.0	0.0	0.0	0.0	0.0	0.0
%ile BackOfQ(50%),veh/ln	1.0	18.6	0.0	5.2	7.4	0.0	1.8	2.6	0.0	11.2	2.8	0.0
Unsig. Movement Delay, s/veh												
LnGrp Delay(d),s/veh	62.3	53.9	0.0	82.5	28.3	0.0	62.6	38.7	0.0	66.5	25.4	0.0
LnGrp LOS	E	D		F	C		E	D		E	C	
Approach Vol, veh/h		1186	A		934	A		311	A		912	A
Approach Delay, s/veh		54.4			43.7			47.1			53.9	
Approach LOS		D			D			D			D	

Timer - Assigned Phs	1	2	3	4	5	6	7	8
Phs Duration (G+Y+Rc), s	28.6	33.0	15.0	45.4	10.2	51.4	8.4	52.0
Change Period (Y+Rc), s	4.5	4.5	4.5	4.5	4.5	4.5	4.5	4.5
Max Green Setting (Gmax), s	24.5	28.5	10.5	41.5	7.5	45.5	5.5	46.5
Max Q Clear Time (g_c+I1), s	24.0	7.6	11.3	39.6	5.8	8.4	4.1	19.3
Green Ext Time (p_c), s	0.2	1.2	0.0	1.3	0.0	2.0	0.0	5.0

Intersection Summary	
HCM 6th Ctrl Delay	50.6
HCM 6th LOS	D

Notes

User approved pedestrian interval to be less than phase max green.

Unsignalized Delay for [NBR, EBR, WBR, SBR] is excluded from calculations of the approach delay and intersection delay.

Lane Group	WBL	WBR	NBT	NBR	SBL	SBT
Lane Group Flow (vph)	245	91	642	395	107	572
v/c Ratio	0.49	0.18	0.38	0.41	0.29	0.34
Control Delay	15.3	4.4	7.6	2.5	9.6	7.3
Queue Delay	0.0	0.0	0.0	0.0	0.0	0.0
Total Delay	15.3	4.4	7.6	2.5	9.6	7.3
Queue Length 50th (ft)	36	0	38	0	12	33
Queue Length 95th (ft)	100	22	82	32	43	72
Internal Link Dist (ft)	814		2717			2595
Turn Bay Length (ft)	250			250	400	
Base Capacity (vph)	1309	1194	2164	1121	462	2164
Starvation Cap Reductn	0	0	0	0	0	0
Spillback Cap Reductn	0	0	0	0	0	0
Storage Cap Reductn	0	0	0	0	0	0
Reduced v/c Ratio	0.19	0.08	0.30	0.35	0.23	0.26

Intersection Summary

Movement	WBL	WBR	NBT	NBR	SBL	SBT
Lane Configurations						
Traffic Volume (veh/h)	225	84	591	363	98	526
Future Volume (veh/h)	225	84	591	363	98	526
Initial Q (Qb), veh	0	0	0	0	0	0
Ped-Bike Adj(A_pbT)	1.00	1.00		1.00	1.00	
Parking Bus, Adj	1.00	1.00	1.00	1.00	1.00	1.00
Work Zone On Approach	No		No			No
Adj Sat Flow, veh/h/ln	1870	1870	1870	1870	1870	1870
Adj Flow Rate, veh/h	245	91	642	395	107	572
Peak Hour Factor	0.92	0.92	0.92	0.92	0.92	0.92
Percent Heavy Veh, %	2	2	2	2	2	2
Cap, veh/h	379	338	1706	761	444	1706
Arrive On Green	0.21	0.21	0.48	0.48	0.48	0.48
Sat Flow, veh/h	1781	1585	3647	1585	544	3647
Grp Volume(v), veh/h	245	91	642	395	107	572
Grp Sat Flow(s),veh/h/ln	1781	1585	1777	1585	544	1777
Q Serve(g_s), s	3.7	1.4	3.4	5.1	4.6	2.9
Cycle Q Clear(g_c), s	3.7	1.4	3.4	5.1	7.9	2.9
Prop In Lane	1.00	1.00		1.00	1.00	
Lane Grp Cap(c), veh/h	379	338	1706	761	444	1706
V/C Ratio(X)	0.65	0.27	0.38	0.52	0.24	0.34
Avail Cap(c_a), veh/h	1701	1514	2788	1243	610	2788
HCM Platoon Ratio	1.00	1.00	1.00	1.00	1.00	1.00
Upstream Filter(I)	1.00	1.00	1.00	1.00	1.00	1.00
Uniform Delay (d), s/veh	10.5	9.6	4.8	5.3	7.3	4.7
Incr Delay (d2), s/veh	1.8	0.4	0.1	0.6	0.3	0.1
Initial Q Delay(d3),s/veh	0.0	0.0	0.0	0.0	0.0	0.0
%ile BackOfQ(50%),veh/ln	1.2	0.4	0.6	0.8	0.3	0.5
Unsig. Movement Delay, s/veh						
LnGrp Delay(d),s/veh	12.4	10.1	5.0	5.8	7.6	4.8
LnGrp LOS	B	B	A	A	A	A
Approach Vol, veh/h	336		1037			679
Approach Delay, s/veh	11.7		5.3			5.3
Approach LOS	B		A			A

Timer - Assigned Phs		2				6	8
Phs Duration (G+Y+Rc), s		18.6				18.6	10.7
Change Period (Y+Rc), s		4.5				4.5	4.5
Max Green Setting (Gmax), s		23.0				23.0	28.0
Max Q Clear Time (g_c+I1), s		7.1				9.9	5.7
Green Ext Time (p_c), s		5.4				4.2	1.0

Intersection Summary	
HCM 6th Ctrl Delay	6.3
HCM 6th LOS	A

Lane Group	EBL	EBT	EBR	WBL	WBT	WBR	NBL	NBT	NBR	SBL	SBT	SBR
Lane Group Flow (vph)	420	304	112	65	262	87	71	177	43	87	262	249
v/c Ratio	0.71	0.16	0.12	0.11	0.14	0.10	0.27	0.21	0.10	0.31	0.31	0.44
Control Delay	15.9	5.4	1.9	5.8	5.3	1.9	18.7	15.7	6.8	19.0	16.2	5.6
Queue Delay	0.0	0.0	0.0	0.0	0.0	0.0	0.0	0.0	0.0	0.0	0.0	0.0
Total Delay	15.9	5.4	1.9	5.8	5.3	1.9	18.7	15.7	6.8	19.0	16.2	5.6
Queue Length 50th (ft)	61	15	0	6	13	0	15	18	0	18	28	0
Queue Length 95th (ft)	#199	40	17	25	35	15	47	44	19	54	62	44
Internal Link Dist (ft)		726			925			690			2070	
Turn Bay Length (ft)	300		275	300		275	300		275	300		500
Base Capacity (vph)	837	2696	1232	804	2696	1227	761	2452	1109	825	2452	1173
Starvation Cap Reductn	0	0	0	0	0	0	0	0	0	0	0	0
Spillback Cap Reductn	0	0	0	0	0	0	0	0	0	0	0	0
Storage Cap Reductn	0	0	0	0	0	0	0	0	0	0	0	0
Reduced v/c Ratio	0.50	0.11	0.09	0.08	0.10	0.07	0.09	0.07	0.04	0.11	0.11	0.21

Intersection Summary

95th percentile volume exceeds capacity, queue may be longer.
Queue shown is maximum after two cycles.

Movement	EBL	EBT	EBR	WBL	WBT	WBR	NBL	NBT	NBR	SBL	SBT	SBR
Lane Configurations												
Traffic Volume (veh/h)	386	280	103	60	241	80	65	163	40	80	241	229
Future Volume (veh/h)	386	280	103	60	241	80	65	163	40	80	241	229
Initial Q (Qb), veh	0	0	0	0	0	0	0	0	0	0	0	0
Ped-Bike Adj(A_pbT)	1.00		1.00	1.00		1.00	1.00		1.00	1.00		1.00
Parking Bus, Adj	1.00	1.00	1.00	1.00	1.00	1.00	1.00	1.00	1.00	1.00	1.00	1.00
Work Zone On Approach		No			No			No			No	
Adj Sat Flow, veh/h/ln	1870	1870	1870	1870	1870	1870	1870	1870	1870	1870	1870	1870
Adj Flow Rate, veh/h	420	304	112	65	262	87	71	177	43	87	262	249
Peak Hour Factor	0.92	0.92	0.92	0.92	0.92	0.92	0.92	0.92	0.92	0.92	0.92	0.92
Percent Heavy Veh, %	2	2	2	2	2	2	2	2	2	2	2	2
Cap, veh/h	680	1881	839	644	1881	839	346	906	404	423	906	404
Arrive On Green	0.53	0.53	0.53	0.53	0.53	0.53	0.25	0.25	0.25	0.25	0.25	0.25
Sat Flow, veh/h	1032	3554	1585	970	3554	1585	889	3554	1585	1161	3554	1585
Grp Volume(v), veh/h	420	304	112	65	262	87	71	177	43	87	262	249
Grp Sat Flow(s),veh/h/ln	1032	1777	1585	970	1777	1585	889	1777	1585	1161	1777	1585
Q Serve(g_s), s	14.6	1.8	1.5	1.5	1.6	1.1	2.9	1.6	0.9	2.7	2.5	5.8
Cycle Q Clear(g_c), s	16.1	1.8	1.5	3.4	1.6	1.1	5.4	1.6	0.9	4.3	2.5	5.8
Prop In Lane	1.00		1.00	1.00		1.00	1.00		1.00	1.00		1.00
Lane Grp Cap(c), veh/h	680	1881	839	644	1881	839	346	906	404	423	906	404
V/C Ratio(X)	0.62	0.16	0.13	0.10	0.14	0.10	0.20	0.20	0.11	0.21	0.29	0.62
Avail Cap(c_a), veh/h	938	2768	1235	886	2768	1235	727	2427	1083	920	2427	1083
HCM Platoon Ratio	1.00	1.00	1.00	1.00	1.00	1.00	1.00	1.00	1.00	1.00	1.00	1.00
Upstream Filter(I)	1.00	1.00	1.00	1.00	1.00	1.00	1.00	1.00	1.00	1.00	1.00	1.00
Uniform Delay (d), s/veh	9.1	5.1	5.0	5.9	5.0	4.9	14.7	12.2	11.9	13.9	12.5	13.7
Incr Delay (d2), s/veh	0.9	0.0	0.1	0.1	0.0	0.1	0.3	0.1	0.1	0.2	0.2	1.5
Initial Q Delay(d3),s/veh	0.0	0.0	0.0	0.0	0.0	0.0	0.0	0.0	0.0	0.0	0.0	0.0
%ile BackOfQ(50%),veh/ln	2.3	0.4	0.3	0.2	0.4	0.2	0.5	0.5	0.3	0.6	0.8	1.9
Unsig. Movement Delay, s/veh												
LnGrp Delay(d),s/veh	10.0	5.1	5.0	6.0	5.0	4.9	15.0	12.3	12.0	14.1	12.7	15.3
LnGrp LOS	A	A	A	A	A	A	B	B	B	B	B	B
Approach Vol, veh/h		836			414			291			598	
Approach Delay, s/veh		7.6			5.2			12.9			14.0	
Approach LOS		A			A			B			B	

Timer - Assigned Phs	2	4	6	8
Phs Duration (G+Y+Rc), s	15.1	26.6	15.1	26.6
Change Period (Y+Rc), s	4.5	4.5	4.5	4.5
Max Green Setting (Gmax), s	28.5	32.5	28.5	32.5
Max Q Clear Time (g_c+I1), s	7.4	18.1	7.8	5.4
Green Ext Time (p_c), s	1.6	4.0	2.8	2.4

Intersection Summary	
HCM 6th Ctrl Delay	9.6
HCM 6th LOS	A

Lane Group	EBL	EBT	EBR	WBL	WBT	WBR	NBT	NBR	SBT	SBR
Lane Group Flow (vph)	313	742	54	11	448	122	36	7	91	227
v/c Ratio	0.61	0.37	0.06	0.03	0.22	0.13	0.13	0.02	0.34	0.45
Control Delay	12.2	5.6	1.9	4.6	4.8	1.6	15.9	2.5	19.0	6.2
Queue Delay	0.0	0.0	0.0	0.0	0.0	0.0	0.0	0.0	0.0	0.0
Total Delay	12.2	5.6	1.9	4.6	4.8	1.6	15.9	2.5	19.0	6.2
Queue Length 50th (ft)	37	37	0	1	21	0	8	0	20	0
Queue Length 95th (ft)	120	78	10	6	46	15	25	3	51	40
Internal Link Dist (ft)		2031			726		424		476	
Turn Bay Length (ft)	485		275	235		275				
Base Capacity (vph)	646	2493	1131	479	2493	1151	970	1155	958	1211
Starvation Cap Reductn	0	0	0	0	0	0	0	0	0	0
Spillback Cap Reductn	0	0	0	0	0	0	0	0	0	0
Storage Cap Reductn	0	0	0	0	0	0	0	0	0	0
Reduced v/c Ratio	0.48	0.30	0.05	0.02	0.18	0.11	0.04	0.01	0.09	0.19

Intersection Summary

Movement	EBL	EBT	EBR	WBL	WBT	WBR	NBL	NBT	NBR	SBL	SBT	SBR
Lane Configurations												
Traffic Volume (veh/h)	288	683	50	10	412	112	29	4	6	80	4	209
Future Volume (veh/h)	288	683	50	10	412	112	29	4	6	80	4	209
Initial Q (Qb), veh	0	0	0	0	0	0	0	0	0	0	0	0
Ped-Bike Adj(A_pbT)	1.00		1.00	1.00		1.00	1.00		1.00	1.00		1.00
Parking Bus, Adj	1.00	1.00	1.00	1.00	1.00	1.00	1.00	1.00	1.00	1.00	1.00	1.00
Work Zone On Approach		No			No			No			No	
Adj Sat Flow, veh/h/ln	1870	1870	1870	1870	1870	1870	1870	1870	1870	1870	1870	1870
Adj Flow Rate, veh/h	313	742	54	11	448	122	32	4	7	87	4	227
Peak Hour Factor	0.92	0.92	0.92	0.92	0.92	0.92	0.92	0.92	0.92	0.92	0.92	0.92
Percent Heavy Veh, %	2	2	2	2	2	2	2	2	2	2	2	2
Cap, veh/h	397	1504	671	296	1504	671	106	7	695	110	3	695
Arrive On Green	0.42	0.42	0.42	0.42	0.42	0.42	0.44	0.44	0.44	0.44	0.44	0.44
Sat Flow, veh/h	842	3554	1585	682	3554	1585	2	17	1585	3	6	1585
Grp Volume(v), veh/h	313	742	54	11	448	122	36	0	7	91	0	227
Grp Sat Flow(s),veh/h/ln	842	1777	1585	682	1777	1585	19	0	1585	9	0	1585
Q Serve(g_s), s	22.1	9.9	1.3	0.8	5.4	3.1	0.1	0.0	0.2	0.1	0.0	6.1
Cycle Q Clear(g_c), s	27.5	9.9	1.3	10.6	5.4	3.1	28.5	0.0	0.2	28.5	0.0	6.1
Prop In Lane	1.00		1.00	1.00		1.00	0.89		1.00	0.96		1.00
Lane Grp Cap(c), veh/h	397	1504	671	296	1504	671	113	0	695	112	0	695
V/C Ratio(X)	0.79	0.49	0.08	0.04	0.30	0.18	0.32	0.00	0.01	0.81	0.00	0.33
Avail Cap(c_a), veh/h	397	1504	671	296	1504	671	113	0	695	113	0	695
HCM Platoon Ratio	1.00	1.00	1.00	1.00	1.00	1.00	1.00	1.00	1.00	1.00	1.00	1.00
Upstream Filter(I)	1.00	1.00	1.00	1.00	1.00	1.00	1.00	0.00	1.00	1.00	0.00	1.00
Uniform Delay (d), s/veh	22.4	13.7	11.2	17.5	12.4	11.7	26.8	0.0	10.3	31.7	0.0	12.0
Incr Delay (d2), s/veh	10.2	0.3	0.1	0.1	0.1	0.1	1.6	0.0	0.0	34.2	0.0	0.3
Initial Q Delay(d3),s/veh	0.0	0.0	0.0	0.0	0.0	0.0	0.0	0.0	0.0	0.0	0.0	0.0
%ile BackOfQ(50%),veh/ln	5.6	3.6	0.4	0.1	2.0	1.0	0.6	0.0	0.1	2.4	0.0	2.0
Unsig. Movement Delay, s/veh												
LnGrp Delay(d),s/veh	32.5	13.9	11.2	17.6	12.5	11.8	28.4	0.0	10.3	65.9	0.0	12.2
LnGrp LOS	C	B	B	B	B	B	C	A	B	E	A	B
Approach Vol, veh/h		1109			581			43			318	
Approach Delay, s/veh		19.0			12.4			25.5			27.6	
Approach LOS		B			B			C			C	

Timer - Assigned Phs	2	4	6	8
Phs Duration (G+Y+Rc), s	33.0	32.0	33.0	32.0
Change Period (Y+Rc), s	4.5	4.5	4.5	4.5
Max Green Setting (Gmax), s	28.5	27.5	28.5	27.5
Max Q Clear Time (g_c+I1), s	30.5	29.5	30.5	12.6
Green Ext Time (p_c), s	0.0	0.0	0.0	3.0

Intersection Summary	
HCM 6th Ctrl Delay	18.6
HCM 6th LOS	B

Lane Group	EBL	EBT	EBR	WBL	WBT	WBR	NBL	NBT	NBR	SBL	SBT	SBR
Lane Group Flow (vph)	151	436	65	22	267	45	27	54	27	42	33	83
v/c Ratio	0.34	0.30	0.10	0.06	0.19	0.07	0.08	0.06	0.07	0.13	0.04	0.18
Control Delay	7.7	5.8	2.1	5.0	5.3	2.2	9.8	9.1	5.3	10.2	9.1	4.4
Queue Delay	0.0	0.0	0.0	0.0	0.0	0.0	0.0	0.0	0.0	0.0	0.0	0.0
Total Delay	7.7	5.8	2.1	5.0	5.3	2.2	9.8	9.1	5.3	10.2	9.1	4.4
Queue Length 50th (ft)	11	16	0	1	10	0	3	2	0	4	1	0
Queue Length 95th (ft)	34	35	9	8	22	8	15	11	10	20	8	18
Internal Link Dist (ft)		2061			2031			426			951	
Turn Bay Length (ft)	325		275	275		275	250		275	250		275
Base Capacity (vph)	1047	3390	1519	891	3390	1518	1309	3390	1517	1284	3390	1520
Starvation Cap Reductn	0	0	0	0	0	0	0	0	0	0	0	0
Spillback Cap Reductn	0	0	0	0	0	0	0	0	0	0	0	0
Storage Cap Reductn	0	0	0	0	0	0	0	0	0	0	0	0
Reduced v/c Ratio	0.14	0.13	0.04	0.02	0.08	0.03	0.02	0.02	0.02	0.03	0.01	0.05

Intersection Summary

Movement	EBL	EBT	EBR	WBL	WBT	WBR	NBL	NBT	NBR	SBL	SBT	SBR
Lane Configurations												
Traffic Volume (veh/h)	139	401	60	20	246	41	25	50	25	39	30	76
Future Volume (veh/h)	139	401	60	20	246	41	25	50	25	39	30	76
Initial Q (Qb), veh	0	0	0	0	0	0	0	0	0	0	0	0
Ped-Bike Adj(A_pbT)	1.00		1.00	1.00		1.00	1.00		1.00	1.00		1.00
Parking Bus, Adj	1.00	1.00	1.00	1.00	1.00	1.00	1.00	1.00	1.00	1.00	1.00	1.00
Work Zone On Approach		No			No			No			No	
Adj Sat Flow, veh/h/ln	1870	1870	1870	1870	1870	1870	1870	1870	1870	1870	1870	1870
Adj Flow Rate, veh/h	151	436	65	22	267	45	27	54	27	42	33	83
Peak Hour Factor	0.92	0.92	0.92	0.92	0.92	0.92	0.92	0.92	0.92	0.92	0.92	0.92
Percent Heavy Veh, %	2	2	2	2	2	2	2	2	2	2	2	2
Cap, veh/h	686	1433	639	594	1433	639	569	757	338	572	757	338
Arrive On Green	0.40	0.40	0.40	0.40	0.40	0.40	0.21	0.21	0.21	0.21	0.21	0.21
Sat Flow, veh/h	1067	3554	1585	897	3554	1585	1276	3554	1585	1317	3554	1585
Grp Volume(v), veh/h	151	436	65	22	267	45	27	54	27	42	33	83
Grp Sat Flow(s),veh/h/ln	1067	1777	1585	897	1777	1585	1276	1777	1585	1317	1777	1585
Q Serve(g_s), s	2.5	2.0	0.6	0.4	1.1	0.4	0.4	0.3	0.3	0.6	0.2	1.0
Cycle Q Clear(g_c), s	3.6	2.0	0.6	2.4	1.1	0.4	0.6	0.3	0.3	0.9	0.2	1.0
Prop In Lane	1.00		1.00	1.00		1.00	1.00		1.00	1.00		1.00
Lane Grp Cap(c), veh/h	686	1433	639	594	1433	639	569	757	338	572	757	338
V/C Ratio(X)	0.22	0.30	0.10	0.04	0.19	0.07	0.05	0.07	0.08	0.07	0.04	0.25
Avail Cap(c_a), veh/h	1529	4241	1891	1303	4241	1891	1820	4241	1891	1863	4241	1891
HCM Platoon Ratio	1.00	1.00	1.00	1.00	1.00	1.00	1.00	1.00	1.00	1.00	1.00	1.00
Upstream Filter(I)	1.00	1.00	1.00	1.00	1.00	1.00	1.00	1.00	1.00	1.00	1.00	1.00
Uniform Delay (d), s/veh	5.7	4.8	4.4	5.6	4.5	4.3	7.6	7.4	7.4	7.7	7.3	7.7
Incr Delay (d2), s/veh	0.2	0.1	0.1	0.0	0.1	0.0	0.0	0.0	0.1	0.1	0.0	0.4
Initial Q Delay(d3),s/veh	0.0	0.0	0.0	0.0	0.0	0.0	0.0	0.0	0.0	0.0	0.0	0.0
%ile BackOfQ(50%),veh/ln	0.3	0.3	0.1	0.0	0.2	0.1	0.1	0.1	0.1	0.1	0.0	0.2
Unsig. Movement Delay, s/veh												
LnGrp Delay(d),s/veh	5.8	4.9	4.4	5.6	4.6	4.3	7.6	7.4	7.5	7.8	7.4	8.0
LnGrp LOS	A	A	A	A	A	A	A	A	A	A	A	A
Approach Vol, veh/h		652			334			108			158	
Approach Delay, s/veh		5.1			4.6			7.5			7.8	
Approach LOS		A			A			A			A	

Timer - Assigned Phs		2		4		6		8				
Phs Duration (G+Y+Rc), s		9.5		14.0		9.5		14.0				
Change Period (Y+Rc), s		4.5		4.5		4.5		4.5				
Max Green Setting (Gmax), s		28.0		28.0		28.0		28.0				
Max Q Clear Time (g_c+I1), s		2.6		5.6		3.0		4.4				
Green Ext Time (p_c), s		0.4		3.8		0.5		2.0				

Intersection Summary												
HCM 6th Ctrl Delay			5.5									
HCM 6th LOS			A									

Lane Group	EBL	EBT	EBR	WBL	WBT	WBR	NBL	NBT	NBR	SBL	SBT	SBR
Lane Group Flow (vph)	192	593	71	43	334	30	163	5	16	7	5	122
v/c Ratio	0.45	0.40	0.10	0.13	0.23	0.04	0.40	0.01	0.03	0.02	0.01	0.22
Control Delay	10.9	7.5	2.5	7.2	6.6	3.1	14.0	10.0	4.2	10.2	10.0	4.2
Queue Delay	0.0	0.0	0.0	0.0	0.0	0.0	0.0	0.0	0.0	0.0	0.0	0.0
Total Delay	10.9	7.5	2.5	7.2	6.6	3.1	14.0	10.0	4.2	10.2	10.0	4.2
Queue Length 50th (ft)	20	32	0	4	16	0	21	1	0	1	1	0
Queue Length 95th (ft)	65	70	13	18	40	9	70	6	7	7	6	25
Internal Link Dist (ft)		1938			2061			478			615	
Turn Bay Length (ft)	300		275	275		250	275		275	275		125
Base Capacity (vph)	717	2477	1129	558	2477	1117	1221	1619	1379	1221	1619	1391
Starvation Cap Reductn	0	0	0	0	0	0	0	0	0	0	0	0
Spillback Cap Reductn	0	0	0	0	0	0	0	0	0	0	0	0
Storage Cap Reductn	0	0	0	0	0	0	0	0	0	0	0	0
Reduced v/c Ratio	0.27	0.24	0.06	0.08	0.13	0.03	0.13	0.00	0.01	0.01	0.00	0.09

Intersection Summary

Movement	EBL	EBT	EBR	WBL	WBT	WBR	NBL	NBT	NBR	SBL	SBT	SBR
Lane Configurations												
Traffic Volume (veh/h)	177	546	65	40	307	28	150	5	15	6	5	112
Future Volume (veh/h)	177	546	65	40	307	28	150	5	15	6	5	112
Initial Q (Qb), veh	0	0	0	0	0	0	0	0	0	0	0	0
Ped-Bike Adj(A_pbT)	1.00		1.00	1.00		1.00	1.00		1.00	1.00		1.00
Parking Bus, Adj	1.00	1.00	1.00	1.00	1.00	1.00	1.00	1.00	1.00	1.00	1.00	1.00
Work Zone On Approach		No			No			No			No	
Adj Sat Flow, veh/h/ln	1870	1870	1870	1870	1870	1870	1870	1870	1870	1870	1870	1870
Adj Flow Rate, veh/h	192	593	71	43	334	30	163	5	16	7	5	122
Peak Hour Factor	0.92	0.92	0.92	0.92	0.92	0.92	0.92	0.92	0.92	0.92	0.92	0.92
Percent Heavy Veh, %	2	2	2	2	2	2	2	2	2	2	2	2
Cap, veh/h	666	1584	707	529	1584	707	541	403	342	568	403	342
Arrive On Green	0.45	0.45	0.45	0.45	0.45	0.45	0.22	0.22	0.22	0.22	0.22	0.22
Sat Flow, veh/h	1018	3554	1585	772	3554	1585	1264	1870	1585	1391	1870	1585
Grp Volume(v), veh/h	192	593	71	43	334	30	163	5	16	7	5	122
Grp Sat Flow(s),veh/h/ln	1018	1777	1585	772	1777	1585	1264	1870	1585	1391	1870	1585
Q Serve(g_s), s	3.8	3.0	0.7	1.0	1.5	0.3	3.1	0.1	0.2	0.1	0.1	1.7
Cycle Q Clear(g_c), s	5.3	3.0	0.7	4.0	1.5	0.3	3.2	0.1	0.2	0.2	0.1	1.7
Prop In Lane	1.00		1.00	1.00		1.00	1.00		1.00	1.00		1.00
Lane Grp Cap(c), veh/h	666	1584	707	529	1584	707	541	403	342	568	403	342
V/C Ratio(X)	0.29	0.37	0.10	0.08	0.21	0.04	0.30	0.01	0.05	0.01	0.01	0.36
Avail Cap(c_a), veh/h	1043	2901	1294	815	2901	1294	1661	2062	1747	1801	2062	1747
HCM Platoon Ratio	1.00	1.00	1.00	1.00	1.00	1.00	1.00	1.00	1.00	1.00	1.00	1.00
Upstream Filter(I)	1.00	1.00	1.00	1.00	1.00	1.00	1.00	1.00	1.00	1.00	1.00	1.00
Uniform Delay (d), s/veh	6.1	4.9	4.3	6.2	4.5	4.2	9.4	8.2	8.3	8.3	8.2	8.9
Incr Delay (d2), s/veh	0.2	0.1	0.1	0.1	0.1	0.0	0.3	0.0	0.1	0.0	0.0	0.6
Initial Q Delay(d3),s/veh	0.0	0.0	0.0	0.0	0.0	0.0	0.0	0.0	0.0	0.0	0.0	0.0
%ile BackOfQ(50%),veh/ln	0.4	0.5	0.1	0.1	0.2	0.0	0.6	0.0	0.1	0.0	0.0	0.4
Unsig. Movement Delay, s/veh												
LnGrp Delay(d),s/veh	6.4	5.0	4.3	6.3	4.6	4.2	9.7	8.2	8.3	8.3	8.2	9.5
LnGrp LOS	A	A	A	A	A	A	A	A	A	A	A	A
Approach Vol, veh/h		856			407			184			134	
Approach Delay, s/veh		5.3			4.7			9.6			9.4	
Approach LOS		A			A			A			A	

Timer - Assigned Phs	2	4	6	8
Phs Duration (G+Y+Rc), s	10.2	16.3	10.2	16.3
Change Period (Y+Rc), s	4.5	4.5	4.5	4.5
Max Green Setting (Gmax), s	29.3	21.7	29.3	21.7
Max Q Clear Time (g_c+I1), s	5.2	7.3	3.7	6.0
Green Ext Time (p_c), s	0.6	4.5	0.4	2.3

Intersection Summary	
HCM 6th Ctrl Delay	6.0
HCM 6th LOS	A

Lane Group	WBL	WBR	NBT	NBR	SBL	SBT
Lane Group Flow (vph)	575	355	1190	973	599	607
v/c Ratio	0.86	0.60	0.87	1.05	1.08	0.24
Control Delay	48.6	8.3	34.2	57.9	86.4	5.1
Queue Delay	0.0	0.0	0.0	0.0	0.0	0.0
Total Delay	48.6	8.3	34.2	57.9	86.4	5.1
Queue Length 50th (ft)	162	0	324	~410	~335	56
Queue Length 95th (ft)	#244	73	#450	#649	#542	76
Internal Link Dist (ft)	1938		1222			1449
Turn Bay Length (ft)	325			150	1000	
Base Capacity (vph)	694	603	1365	929	556	2489
Starvation Cap Reductn	0	0	0	0	0	0
Spillback Cap Reductn	0	0	0	0	0	0
Storage Cap Reductn	0	0	0	0	0	0
Reduced v/c Ratio	0.83	0.59	0.87	1.05	1.08	0.24

Intersection Summary

~ Volume exceeds capacity, queue is theoretically infinite.
Queue shown is maximum after two cycles.

95th percentile volume exceeds capacity, queue may be longer.
Queue shown is maximum after two cycles.

Movement	WBL	WBR	NBT	NBR	SBL	SBT
Lane Configurations						
Traffic Volume (veh/h)	529	327	1095	895	551	558
Future Volume (veh/h)	529	327	1095	895	551	558
Initial Q (Qb), veh	0	0	0	0	0	0
Ped-Bike Adj(A_pbT)	1.00	1.00		1.00	1.00	
Parking Bus, Adj	1.00	1.00	1.00	1.00	1.00	1.00
Work Zone On Approach	No		No			No
Adj Sat Flow, veh/h/ln	1870	1870	1870	1870	1870	1870
Adj Flow Rate, veh/h	575	355	1190	973	599	607
Peak Hour Factor	0.92	0.92	0.92	0.92	0.92	0.92
Percent Heavy Veh, %	2	2	2	2	2	2
Cap, veh/h	695	319	1362	608	566	2484
Arrive On Green	0.20	0.20	0.38	0.38	0.27	0.70
Sat Flow, veh/h	3456	1585	3647	1585	1781	3647
Grp Volume(v), veh/h	575	355	1190	973	599	607
Grp Sat Flow(s),veh/h/ln	1728	1585	1777	1585	1781	1777
Q Serve(g_s), s	14.4	18.1	27.9	34.5	23.9	5.6
Cycle Q Clear(g_c), s	14.4	18.1	27.9	34.5	23.9	5.6
Prop In Lane	1.00	1.00		1.00	1.00	
Lane Grp Cap(c), veh/h	695	319	1362	608	566	2484
V/C Ratio(X)	0.83	1.11	0.87	1.60	1.06	0.24
Avail Cap(c_a), veh/h	695	319	1362	608	566	2484
HCM Platoon Ratio	1.00	1.00	1.00	1.00	1.00	1.00
Upstream Filter(I)	1.00	1.00	1.00	1.00	1.00	1.00
Uniform Delay (d), s/veh	34.5	36.0	25.7	27.7	26.1	4.9
Incr Delay (d2), s/veh	8.2	84.6	8.0	278.3	53.9	0.2
Initial Q Delay(d3),s/veh	0.0	0.0	0.0	0.0	0.0	0.0
%ile BackOfQ(50%),veh/ln	6.7	14.3	12.7	59.3	15.0	1.8
Unsig. Movement Delay, s/veh						
LnGrp Delay(d),s/veh	42.6	120.5	33.7	306.0	80.1	5.2
LnGrp LOS	D	F	C	F	F	A
Approach Vol, veh/h	930		2163			1206
Approach Delay, s/veh	72.4		156.2			42.4
Approach LOS	E		F			D

Timer - Assigned Phs	1	2				6	8
Phs Duration (G+Y+Rc), s	28.4	39.0				67.4	22.6
Change Period (Y+Rc), s	4.5	4.5				4.5	4.5
Max Green Setting (Gmax), s	23.9	34.5				62.9	18.1
Max Q Clear Time (g_c+I1), s	25.9	36.5				7.6	20.1
Green Ext Time (p_c), s	0.0	0.0				4.9	0.0

Intersection Summary	
HCM 6th Ctrl Delay	106.1
HCM 6th LOS	F

Lane Group	WBL	WBR	NBT	NBR	SBL	SBT
Lane Group Flow (vph)	575	355	1190	973	599	607
v/c Ratio	0.86	0.42	0.91	0.61	1.02	0.24
Control Delay	48.6	14.0	39.3	1.8	67.9	5.1
Queue Delay	0.0	0.0	0.0	0.0	0.0	0.0
Total Delay	48.6	14.0	39.3	1.8	67.9	5.1
Queue Length 50th (ft)	162	109	335	0	~316	56
Queue Length 95th (ft)	#244	175	#470	0	#523	76
Internal Link Dist (ft)	1938		1222			1449
Turn Bay Length (ft)	325			150	1000	
Base Capacity (vph)	694	847	1301	1583	588	2489
Starvation Cap Reductn	0	0	0	0	0	0
Spillback Cap Reductn	0	0	0	0	0	0
Storage Cap Reductn	0	0	0	0	0	0
Reduced v/c Ratio	0.83	0.42	0.91	0.61	1.02	0.24

Intersection Summary

~ Volume exceeds capacity, queue is theoretically infinite.
Queue shown is maximum after two cycles.

95th percentile volume exceeds capacity, queue may be longer.
Queue shown is maximum after two cycles.

Movement	WBL	WBR	NBT	NBR	SBL	SBT
Lane Configurations						
Traffic Volume (veh/h)	529	327	1095	895	551	558
Future Volume (veh/h)	529	327	1095	895	551	558
Initial Q (Qb), veh	0	0	0	0	0	0
Ped-Bike Adj(A_pbT)	1.00	1.00		1.00	1.00	
Parking Bus, Adj	1.00	1.00	1.00	1.00	1.00	1.00
Work Zone On Approach	No		No			No
Adj Sat Flow, veh/h/ln	1870	1870	1870	1870	1870	1870
Adj Flow Rate, veh/h	575	355	1190	0	599	607
Peak Hour Factor	0.92	0.92	0.92	0.92	0.92	0.92
Percent Heavy Veh, %	2	2	2	2	2	2
Cap, veh/h	664	759	1314		616	2512
Arrive On Green	0.19	0.19	0.37	0.00	0.29	0.71
Sat Flow, veh/h	3456	1585	3647	1585	1781	3647
Grp Volume(v), veh/h	575	355	1190	0	599	607
Grp Sat Flow(s),veh/h/ln	1728	1585	1777	1585	1781	1777
Q Serve(g_s), s	14.4	13.4	28.2	0.0	24.2	5.4
Cycle Q Clear(g_c), s	14.4	13.4	28.2	0.0	24.2	5.4
Prop In Lane	1.00	1.00		1.00	1.00	
Lane Grp Cap(c), veh/h	664	759	1314		616	2512
V/C Ratio(X)	0.87	0.47	0.91		0.97	0.24
Avail Cap(c_a), veh/h	703	777	1314		616	2512
HCM Platoon Ratio	1.00	1.00	1.00	1.00	1.00	1.00
Upstream Filter(I)	1.00	1.00	1.00	0.00	1.00	1.00
Uniform Delay (d), s/veh	34.8	15.6	26.6	0.0	24.0	4.6
Incr Delay (d2), s/veh	10.7	0.4	10.6	0.0	29.3	0.2
Initial Q Delay(d3),s/veh	0.0	0.0	0.0	0.0	0.0	0.0
%ile BackOfQ(50%),veh/ln	6.9	4.7	13.3	0.0	11.4	1.7
Unsig. Movement Delay, s/veh						
LnGrp Delay(d),s/veh	45.5	16.0	37.1	0.0	53.4	4.8
LnGrp LOS	D	B	D		D	A
Approach Vol, veh/h	930		1190	A		1206
Approach Delay, s/veh	34.2		37.1			28.9
Approach LOS	C		D			C

Timer - Assigned Phs	1	2				6	8
Phs Duration (G+Y+Rc), s	30.0	37.4				67.4	21.6
Change Period (Y+Rc), s	4.5	4.5				4.5	4.5
Max Green Setting (Gmax), s	25.5	32.9				62.9	18.1
Max Q Clear Time (g_c+I1), s	26.2	30.2				7.4	16.4
Green Ext Time (p_c), s	0.0	1.9				4.9	0.7

Intersection Summary	
HCM 6th Ctrl Delay	33.4
HCM 6th LOS	C

Notes

Unsignalized Delay for [NBR] is excluded from calculations of the approach delay and intersection delay.

Appendix E

2030 TOTAL TRAFFIC LEVEL OF SERVICE OUTPUT

Lane Group	EBL	EBT	EBR	WBL	WBT	WBR	NBL	NBT	NBR	SBL	SBT	SBR
Lane Group Flow (vph)	145	103	12	437	145	197	38	438	287	187	412	45
v/c Ratio	0.56	0.28	0.03	0.83	0.18	0.39	0.09	0.41	0.42	0.38	0.27	0.06
Control Delay	27.1	33.6	0.2	35.2	23.1	6.4	11.7	22.8	5.3	13.6	16.1	0.1
Queue Delay	0.0	0.0	0.0	0.0	0.0	0.0	0.0	0.0	0.0	0.0	0.0	0.0
Total Delay	27.1	33.6	0.2	35.2	23.1	6.4	11.7	22.8	5.3	13.6	16.1	0.1
Queue Length 50th (ft)	45	24	0	166	28	0	9	86	0	47	72	0
Queue Length 95th (ft)	83	47	0	#281	51	48	24	136	55	88	110	0
Internal Link Dist (ft)		911			760			1157			1874	
Turn Bay Length (ft)	235		450	200		400	700		600			490
Base Capacity (vph)	259	1779	896	528	2332	1110	414	1072	679	531	1509	764
Starvation Cap Reductn	0	0	0	0	0	0	0	0	0	0	0	0
Spillback Cap Reductn	0	0	0	0	0	0	0	0	0	0	0	0
Storage Cap Reductn	0	0	0	0	0	0	0	0	0	0	0	0
Reduced v/c Ratio	0.56	0.06	0.01	0.83	0.06	0.18	0.09	0.41	0.42	0.35	0.27	0.06

Intersection Summary

95th percentile volume exceeds capacity, queue may be longer.
Queue shown is maximum after two cycles.

Movement	EBL	EBT	EBR	WBL	WBT	WBR	NBL	NBT	NBR	SBL	SBT	SBR
Lane Configurations												
Traffic Volume (veh/h)	133	59	11	159	88	44	35	403	33	67	379	41
Future Volume (veh/h)	133	95	11	402	133	181	35	403	264	172	379	41
Initial Q (Qb), veh	0	0	0	0	0	0	0	0	0	0	0	0
Ped-Bike Adj(A_pbT)	1.00		1.00	1.00		1.00	1.00		1.00	1.00		1.00
Parking Bus, Adj	1.00	1.00	1.00	1.00	1.00	1.00	1.00	1.00	1.00	1.00	1.00	1.00
Work Zone On Approach		No			No			No			No	
Adj Sat Flow, veh/h/ln	1870	1870	1870	1870	1870	1870	1870	1870	1870	1870	1870	1870
Adj Flow Rate, veh/h	145	103	0	437	145	0	38	438	0	187	412	0
Peak Hour Factor	0.92	0.92	0.92	0.92	0.92	0.92	0.92	0.92	0.92	0.92	0.92	0.92
Percent Heavy Veh, %	2	2	2	2	2	2	2	2	2	2	2	2
Cap, veh/h	345	249		588	798		478	1215		504	1414	
Arrive On Green	0.09	0.07	0.00	0.24	0.22	0.00	0.04	0.34	0.00	0.09	0.40	0.00
Sat Flow, veh/h	1781	3554	1585	1781	3554	1585	1781	3554	1585	1781	3554	1585
Grp Volume(v), veh/h	145	103	0	437	145	0	38	438	0	187	412	0
Grp Sat Flow(s),veh/h/ln	1781	1777	1585	1781	1777	1585	1781	1777	1585	1781	1777	1585
Q Serve(g_s), s	5.3	2.0	0.0	15.3	2.4	0.0	1.0	6.6	0.0	4.6	5.6	0.0
Cycle Q Clear(g_c), s	5.3	2.0	0.0	15.3	2.4	0.0	1.0	6.6	0.0	4.6	5.6	0.0
Prop In Lane	1.00		1.00	1.00		1.00	1.00		1.00	1.00		1.00
Lane Grp Cap(c), veh/h	345	249		588	798		478	1215		504	1414	
V/C Ratio(X)	0.42	0.41		0.74	0.18		0.08	0.36		0.37	0.29	
Avail Cap(c_a), veh/h	345	1792		592	2350		539	1215		650	1414	
HCM Platoon Ratio	1.00	1.00	1.00	1.00	1.00	1.00	1.00	1.00	1.00	1.00	1.00	1.00
Upstream Filter(I)	1.00	1.00	0.00	1.00	1.00	0.00	1.00	1.00	0.00	1.00	1.00	0.00
Uniform Delay (d), s/veh	27.5	31.8	0.0	20.7	22.4	0.0	14.1	17.6	0.0	12.4	14.6	0.0
Incr Delay (d2), s/veh	0.8	1.1	0.0	5.0	0.1	0.0	0.1	0.8	0.0	0.5	0.5	0.0
Initial Q Delay(d3),s/veh	0.0	0.0	0.0	0.0	0.0	0.0	0.0	0.0	0.0	0.0	0.0	0.0
%ile BackOfQ(50%),veh/ln	2.2	0.9	0.0	6.7	1.0	0.0	0.4	2.7	0.0	1.7	2.2	0.0
Unsig. Movement Delay, s/veh												
LnGrp Delay(d),s/veh	28.3	32.9	0.0	25.7	22.5	0.0	14.1	18.5	0.0	12.8	15.2	0.0
LnGrp LOS	C	C		C	C		B	B		B	B	
Approach Vol, veh/h		248	A		582	A		476	A		599	A
Approach Delay, s/veh		30.2			24.9			18.1			14.4	
Approach LOS		C			C			B			B	

Timer - Assigned Phs	1	2	3	4	5	6	7	8
Phs Duration (G+Y+Rc), s	11.1	28.9	21.8	9.5	7.1	32.9	10.8	20.5
Change Period (Y+Rc), s	4.5	4.5	4.5	4.5	4.5	4.5	4.5	4.5
Max Green Setting (Gmax), s	12.5	21.0	17.5	36.0	5.1	28.4	6.3	47.2
Max Q Clear Time (g_c+I1), s	6.6	8.6	17.3	4.0	3.0	7.6	7.3	4.4
Green Ext Time (p_c), s	0.2	2.3	0.0	0.6	0.0	2.7	0.0	1.0

Intersection Summary	
HCM 6th Ctrl Delay	20.6
HCM 6th LOS	C

Notes

Unsignalized Delay for [NBR, EBR, WBR, SBR] is excluded from calculations of the approach delay and intersection delay.

Intersection	
Int Delay, s/veh	0.3

Movement	EBT	EBR	WBL	WBT	NBL	NBR
Lane Configurations						
Traffic Vol, veh/h	128	10	2	251	15	2
Future Vol, veh/h	500	10	2	676	15	2
Conflicting Peds, #/hr	0	0	0	0	0	0
Sign Control	Free	Free	Free	Free	Stop	Stop
RT Channelized	-	None	-	None	-	None
Storage Length	-	235	235	-	0	-
Veh in Median Storage, #	0	-	-	0	0	-
Grade, %	0	-	-	0	0	-
Peak Hour Factor	92	92	92	92	92	92
Heavy Vehicles, %	2	2	2	2	2	2
Mvmt Flow	543	11	2	735	16	2

Major/Minor	Major1		Major2		Minor1	
Conflicting Flow All	0	0	554	0	915	272
Stage 1	-	-	-	-	543	-
Stage 2	-	-	-	-	372	-
Critical Hdwy	-	-	4.14	-	6.84	6.94
Critical Hdwy Stg 1	-	-	-	-	5.84	-
Critical Hdwy Stg 2	-	-	-	-	5.84	-
Follow-up Hdwy	-	-	2.22	-	3.52	3.32
Pot Cap-1 Maneuver	-	-	1012	-	272	726
Stage 1	-	-	-	-	546	-
Stage 2	-	-	-	-	667	-
Platoon blocked, %	-	-		-		
Mov Cap-1 Maneuver	-	-	1012	-	271	726
Mov Cap-2 Maneuver	-	-	-	-	271	-
Stage 1	-	-	-	-	546	-
Stage 2	-	-	-	-	666	-

Approach	EB	WB	NB
HCM Control Delay, s	0	0	18.1
HCM LOS			C

Minor Lane/Major Mvmt	NBLn1	EBT	EBR	WBL	WBT
Capacity (veh/h)	293	-	-	1012	-
HCM Lane V/C Ratio	0.063	-	-	0.002	-
HCM Control Delay (s)	18.1	-	-	8.6	-
HCM Lane LOS	C	-	-	A	-
HCM 95th %tile Q(veh)	0.2	-	-	0	-

Lane Group	EBL	EBT	EBR	WBL	WBT	WBR	NBL	NBT	NBR	SBL	SBT	SBR
Lane Group Flow (vph)	72	363	110	357	971	504	142	509	161	199	483	70
v/c Ratio	0.36	0.41	0.21	0.70	0.75	0.65	0.48	0.46	0.27	0.60	0.42	0.11
Control Delay	50.6	30.7	2.3	47.3	30.6	13.4	48.9	29.3	5.5	50.6	28.0	0.4
Queue Delay	0.0	0.0	0.0	0.0	0.0	0.0	0.0	0.0	0.0	0.0	0.0	0.0
Total Delay	50.6	30.7	2.3	47.3	30.6	13.4	48.9	29.3	5.5	50.6	28.0	0.4
Queue Length 50th (ft)	23	97	0	111	273	90	45	141	0	63	131	0
Queue Length 95th (ft)	46	138	14	160	349	203	76	192	45	101	179	0
Internal Link Dist (ft)		664			834			1448			1908	
Turn Bay Length (ft)	225		100				455		455	385		385
Base Capacity (vph)	202	1065	591	572	1446	832	313	1105	607	351	1143	622
Starvation Cap Reductn	0	0	0	0	0	0	0	0	0	0	0	0
Spillback Cap Reductn	0	0	0	0	0	0	0	0	0	0	0	0
Storage Cap Reductn	0	0	0	0	0	0	0	0	0	0	0	0
Reduced v/c Ratio	0.36	0.34	0.19	0.62	0.67	0.61	0.45	0.46	0.27	0.57	0.42	0.11

Intersection Summary

Movement	EBL	EBT	EBR	WBL	WBT	WBR	NBL	NBT	NBR	SBL	SBT	SBR
Lane Configurations												
Traffic Volume (veh/h)	30	311	41	311	875	464	131	431	127	183	414	36
Future Volume (veh/h)	66	334	101	328	893	464	131	468	148	183	444	64
Initial Q (Qb), veh	0	0	0	0	0	0	0	0	0	0	0	0
Ped-Bike Adj(A_pbT)	1.00		1.00	1.00		1.00	1.00		1.00	1.00		1.00
Parking Bus, Adj	1.00	1.00	1.00	1.00	1.00	1.00	1.00	1.00	1.00	1.00	1.00	1.00
Work Zone On Approach		No			No			No			No	
Adj Sat Flow, veh/h/ln	1870	1870	1870	1870	1870	1870	1870	1870	1870	1870	1870	1870
Adj Flow Rate, veh/h	72	363	0	357	971	0	142	509	0	199	483	0
Peak Hour Factor	0.92	0.92	0.92	0.92	0.92	0.92	0.92	0.92	0.92	0.92	0.92	0.92
Percent Heavy Veh, %	2	2	2	2	2	2	2	2	2	2	2	2
Cap, veh/h	163	910		447	1203		215	1172		277	1235	
Arrive On Green	0.05	0.26	0.00	0.13	0.34	0.00	0.06	0.33	0.00	0.08	0.35	0.00
Sat Flow, veh/h	3456	3554	1585	3456	3554	1585	3456	3554	1585	3456	3554	1585
Grp Volume(v), veh/h	72	363	0	357	971	0	142	509	0	199	483	0
Grp Sat Flow(s),veh/h/ln	1728	1777	1585	1728	1777	1585	1728	1777	1585	1728	1777	1585
Q Serve(g_s), s	1.8	7.4	0.0	8.8	21.9	0.0	3.5	9.9	0.0	4.9	9.0	0.0
Cycle Q Clear(g_c), s	1.8	7.4	0.0	8.8	21.9	0.0	3.5	9.9	0.0	4.9	9.0	0.0
Prop In Lane	1.00		1.00	1.00		1.00	1.00		1.00	1.00		1.00
Lane Grp Cap(c), veh/h	163	910		447	1203		215	1172		277	1235	
V/C Ratio(X)	0.44	0.40		0.80	0.81		0.66	0.43		0.72	0.39	
Avail Cap(c_a), veh/h	216	1131		609	1535		334	1172		373	1235	
HCM Platoon Ratio	1.00	1.00	1.00	1.00	1.00	1.00	1.00	1.00	1.00	1.00	1.00	1.00
Upstream Filter(I)	1.00	1.00	0.00	1.00	1.00	0.00	1.00	1.00	0.00	1.00	1.00	0.00
Uniform Delay (d), s/veh	40.8	27.1	0.0	37.2	26.5	0.0	40.3	23.1	0.0	39.5	21.7	0.0
Incr Delay (d2), s/veh	1.9	0.3	0.0	5.3	2.6	0.0	3.5	1.2	0.0	4.3	0.9	0.0
Initial Q Delay(d3),s/veh	0.0	0.0	0.0	0.0	0.0	0.0	0.0	0.0	0.0	0.0	0.0	0.0
%ile BackOfQ(50%),veh/ln	0.8	3.1	0.0	4.0	9.3	0.0	1.6	4.2	0.0	2.2	3.8	0.0
Unsig. Movement Delay, s/veh												
LnGrp Delay(d),s/veh	42.7	27.4	0.0	42.5	29.1	0.0	43.8	24.2	0.0	43.8	22.6	0.0
LnGrp LOS	D	C		D	C		D	C		D	C	
Approach Vol, veh/h		435	A		1328	A		651	A		682	A
Approach Delay, s/veh		29.9			32.7			28.5			28.8	
Approach LOS		C			C			C			C	

Timer - Assigned Phs	1	2	3	4	5	6	7	8
Phs Duration (G+Y+Rc), s	11.5	33.5	15.9	27.0	10.0	35.1	8.6	34.3
Change Period (Y+Rc), s	4.5	4.5	4.5	4.5	4.5	4.5	4.5	4.5
Max Green Setting (Gmax), s	9.5	29.0	15.5	28.0	8.5	30.0	5.5	38.0
Max Q Clear Time (g_c+I1), s	6.9	11.9	10.8	9.4	5.5	11.0	3.8	23.9
Green Ext Time (p_c), s	0.2	3.1	0.6	2.2	0.1	3.1	0.0	5.9

Intersection Summary	
HCM 6th Ctrl Delay	30.5
HCM 6th LOS	C

Notes

Unsignalized Delay for [NBR, EBR, WBR, SBR] is excluded from calculations of the approach delay and intersection delay.

Lane Group	EBL	EBT	WBL	WBT	NBL	NBT	NBR	SBL	SBT	SBR
Lane Group Flow (vph)	58	75	319	131	149	569	102	28	807	24
v/c Ratio	0.13	0.12	0.67	0.20	0.63	0.36	0.13	0.08	0.51	0.03
Control Delay	12.1	5.6	21.9	4.2	28.0	10.6	3.3	10.5	12.0	4.9
Queue Delay	0.0	0.0	0.0	0.0	0.0	0.0	0.0	0.0	0.0	0.0
Total Delay	12.1	5.6	21.9	4.2	28.0	10.6	3.3	10.5	12.0	4.9
Queue Length 50th (ft)	11	3	77	2	30	52	0	4	80	0
Queue Length 95th (ft)	33	24	165	29	#129	112	23	20	166	11
Internal Link Dist (ft)		818		800		2717			1066	
Turn Bay Length (ft)			250		250		250	400		200
Base Capacity (vph)	774	1040	814	1038	330	2185	1016	485	2185	987
Starvation Cap Reductn	0	0	0	0	0	0	0	0	0	0
Spillback Cap Reductn	0	0	0	0	0	0	0	0	0	0
Storage Cap Reductn	0	0	0	0	0	0	0	0	0	0
Reduced v/c Ratio	0.07	0.07	0.39	0.13	0.45	0.26	0.10	0.06	0.37	0.02

Intersection Summary

95th percentile volume exceeds capacity, queue may be longer.
Queue shown is maximum after two cycles.

Movement	EBL	EBT	EBR	WBL	WBT	WBR	NBL	NBT	NBR	SBL	SBT	SBR
Lane Configurations												
Traffic Volume (veh/h)	0	0	0	319	0	120	0	569	102	28	738	0
Future Volume (veh/h)	58	18	57	319	11	120	149	569	102	28	807	24
Initial Q (Qb), veh	0	0	0	0	0	0	0	0	0	0	0	0
Ped-Bike Adj(A_pbT)	1.00		1.00	1.00		1.00	1.00		1.00	1.00		1.00
Parking Bus, Adj	1.00	1.00	1.00	1.00	1.00	1.00	1.00	1.00	1.00	1.00	1.00	1.00
Work Zone On Approach		No			No			No			No	
Adj Sat Flow, veh/h/ln	1870	1870	1870	1870	1870	1870	1870	1870	1870	1870	1870	1870
Adj Flow Rate, veh/h	58	18	57	319	11	120	149	569	102	28	807	24
Peak Hour Factor	1.00	1.00	1.00	1.00	1.00	1.00	1.00	1.00	1.00	1.00	1.00	1.00
Percent Heavy Veh, %	2	2	2	2	2	2	2	2	2	2	2	2
Cap, veh/h	500	131	416	555	45	489	366	1677	748	441	1677	748
Arrive On Green	0.33	0.33	0.33	0.33	0.33	0.33	0.47	0.47	0.47	0.47	0.47	0.47
Sat Flow, veh/h	1259	395	1250	1325	135	1471	660	3554	1585	767	3554	1585
Grp Volume(v), veh/h	58	0	75	319	0	131	149	569	102	28	807	24
Grp Sat Flow(s),veh/h/ln	1259	0	1645	1325	0	1606	660	1777	1585	767	1777	1585
Q Serve(g_s), s	1.6	0.0	1.5	10.2	0.0	2.7	9.2	4.6	1.7	1.1	7.1	0.4
Cycle Q Clear(g_c), s	4.3	0.0	1.5	11.7	0.0	2.7	16.3	4.6	1.7	5.7	7.1	0.4
Prop In Lane	1.00		0.76	1.00		0.92	1.00		1.00	1.00		1.00
Lane Grp Cap(c), veh/h	500	0	547	555	0	534	366	1677	748	441	1677	748
V/C Ratio(X)	0.12	0.00	0.14	0.58	0.00	0.25	0.41	0.34	0.14	0.06	0.48	0.03
Avail Cap(c_a), veh/h	849	0	1003	922	0	978	457	2166	966	547	2166	966
HCM Platoon Ratio	1.00	1.00	1.00	1.00	1.00	1.00	1.00	1.00	1.00	1.00	1.00	1.00
Upstream Filter(I)	1.00	0.00	1.00	1.00	0.00	1.00	1.00	1.00	1.00	1.00	1.00	1.00
Uniform Delay (d), s/veh	12.7	0.0	10.7	14.8	0.0	11.2	13.9	7.6	6.9	9.4	8.3	6.5
Incr Delay (d2), s/veh	0.1	0.0	0.1	0.9	0.0	0.2	0.7	0.1	0.1	0.1	0.2	0.0
Initial Q Delay(d3),s/veh	0.0	0.0	0.0	0.0	0.0	0.0	0.0	0.0	0.0	0.0	0.0	0.0
%ile BackOfQ(50%),veh/ln	0.4	0.0	0.5	2.7	0.0	0.8	1.0	0.9	0.3	0.1	1.5	0.1
Unsig. Movement Delay, s/veh												
LnGrp Delay(d),s/veh	12.8	0.0	10.8	15.8	0.0	11.4	14.6	7.8	6.9	9.5	8.5	6.5
LnGrp LOS	B	A	B	B	A	B	B	A	A	A	A	A
Approach Vol, veh/h		133			450			820			859	
Approach Delay, s/veh		11.7			14.5			8.9			8.5	
Approach LOS		B			B			A			A	

Timer - Assigned Phs		2		4		6		8				
Phs Duration (G+Y+Rc), s		26.2		19.8		26.2		19.8				
Change Period (Y+Rc), s		4.5		4.5		4.5		4.5				
Max Green Setting (Gmax), s		28.0		28.0		28.0		28.0				
Max Q Clear Time (g_c+I1), s		18.3		6.3		9.1		13.7				
Green Ext Time (p_c), s		3.4		0.5		4.9		1.6				

Intersection Summary												
HCM 6th Ctrl Delay			10.0									
HCM 6th LOS			B									

Lane Group	EBL	EBT	EBR	WBL	WBT	WBR	NBL	NBT	NBR	SBL	SBT	SBR
Lane Group Flow (vph)	309	175	71	109	325	109	122	330	22	23	203	504
v/c Ratio	0.51	0.09	0.08	0.37	0.37	0.23	0.41	0.36	0.05	0.09	0.22	0.65
Control Delay	23.1	6.1	2.5	18.6	15.5	5.3	18.4	14.6	0.2	13.7	13.6	6.6
Queue Delay	0.0	0.0	0.0	0.0	0.0	0.0	0.0	0.0	0.0	0.0	0.0	0.0
Total Delay	23.1	6.1	2.5	18.6	15.5	5.3	18.4	14.6	0.2	13.7	13.6	6.6
Queue Length 50th (ft)	34	8	0	21	33	0	24	33	0	4	20	3
Queue Length 95th (ft)	#104	29	16	66	75	29	68	70	0	19	46	59
Internal Link Dist (ft)		726			925			690			2070	
Turn Bay Length (ft)	300		275	300		275	300		275	300		500
Base Capacity (vph)	606	3183	1431	787	2333	1080	848	2583	1177	751	2583	1287
Starvation Cap Reductn	0	0	0	0	0	0	0	0	0	0	0	0
Spillback Cap Reductn	0	0	0	0	0	0	0	0	0	0	0	0
Storage Cap Reductn	0	0	0	0	0	0	0	0	0	0	0	0
Reduced v/c Ratio	0.51	0.05	0.05	0.14	0.14	0.10	0.14	0.13	0.02	0.03	0.08	0.39

Intersection Summary

95th percentile volume exceeds capacity, queue may be longer.
Queue shown is maximum after two cycles.

Movement	EBL	EBT	EBR	WBL	WBT	WBR	NBL	NBT	NBR	SBL	SBT	SBR
Lane Configurations												
Traffic Volume (veh/h)	159	161	44	100	299	100	101	280	20	21	163	362
Future Volume (veh/h)	284	161	65	100	299	100	112	304	20	21	187	464
Initial Q (Qb), veh	0	0	0	0	0	0	0	0	0	0	0	0
Ped-Bike Adj(A_pbT)	1.00		1.00	1.00		1.00	1.00		1.00	1.00		1.00
Parking Bus, Adj	1.00	1.00	1.00	1.00	1.00	1.00	1.00	1.00	1.00	1.00	1.00	1.00
Work Zone On Approach		No			No			No			No	
Adj Sat Flow, veh/h/ln	1870	1870	1870	1870	1870	1870	1870	1870	1870	1870	1870	1870
Adj Flow Rate, veh/h	309	175	71	109	325	109	122	330	22	23	203	504
Peak Hour Factor	0.92	0.92	0.92	0.92	0.92	0.92	0.92	0.92	0.92	0.92	0.92	0.92
Percent Heavy Veh, %	2	2	2	2	2	2	2	2	2	2	2	2
Cap, veh/h	448	1480	660	370	678	302	417	1392	621	493	1392	621
Arrive On Green	0.13	0.42	0.42	0.19	0.19	0.19	0.39	0.39	0.39	0.39	0.39	0.39
Sat Flow, veh/h	3456	3554	1585	1134	3554	1585	741	3554	1585	1029	3554	1585
Grp Volume(v), veh/h	309	175	71	109	325	109	122	330	22	23	203	504
Grp Sat Flow(s),veh/h/ln	1728	1777	1585	1134	1777	1585	741	1777	1585	1029	1777	1585
Q Serve(g_s), s	4.0	1.4	1.3	4.0	3.8	2.8	6.0	2.9	0.4	0.7	1.7	13.3
Cycle Q Clear(g_c), s	4.0	1.4	1.3	4.0	3.8	2.8	7.7	2.9	0.4	3.6	1.7	13.3
Prop In Lane	1.00		1.00	1.00		1.00	1.00		1.00	1.00		1.00
Lane Grp Cap(c), veh/h	448	1480	660	370	678	302	417	1392	621	493	1392	621
V/C Ratio(X)	0.69	0.12	0.11	0.29	0.48	0.36	0.29	0.24	0.04	0.05	0.15	0.81
Avail Cap(c_a), veh/h	553	3033	1353	831	2123	947	617	2351	1049	770	2351	1049
HCM Platoon Ratio	1.00	1.00	1.00	1.00	1.00	1.00	1.00	1.00	1.00	1.00	1.00	1.00
Upstream Filter(I)	1.00	1.00	1.00	1.00	1.00	1.00	1.00	1.00	1.00	1.00	1.00	1.00
Uniform Delay (d), s/veh	19.5	8.4	8.4	17.0	16.9	16.5	11.7	9.6	8.8	10.8	9.2	12.7
Incr Delay (d2), s/veh	2.7	0.0	0.1	0.4	0.5	0.7	0.4	0.1	0.0	0.0	0.0	2.6
Initial Q Delay(d3),s/veh	0.0	0.0	0.0	0.0	0.0	0.0	0.0	0.0	0.0	0.0	0.0	0.0
%ile BackOfQ(50%),veh/ln	1.6	0.4	0.4	1.0	1.4	1.0	0.9	0.9	0.1	0.1	0.6	4.2
Unsig. Movement Delay, s/veh												
LnGrp Delay(d),s/veh	22.2	8.4	8.4	17.4	17.4	17.2	12.1	9.6	8.8	10.8	9.2	15.3
LnGrp LOS	C	A	A	B	B	B	B	A	A	B	A	B
Approach Vol, veh/h		555			543			474			730	
Approach Delay, s/veh		16.1			17.4			10.2			13.5	
Approach LOS		B			B			B			B	

Timer - Assigned Phs		2		4		6	7	8				
Phs Duration (G+Y+Rc), s		22.9		24.0		22.9	10.6	13.4				
Change Period (Y+Rc), s		4.5		4.5		4.5	4.5	4.5				
Max Green Setting (Gmax), s		31.0		40.0		31.0	7.5	28.0				
Max Q Clear Time (g_c+I1), s		9.7		3.4		15.3	6.0	6.0				
Green Ext Time (p_c), s		3.1		1.4		3.1	0.2	2.9				

Intersection Summary												
HCM 6th Ctrl Delay			14.4									
HCM 6th LOS			B									

Lane Group	EBL	EBT	EBR	WBL	WBT	WBR	NBT	NBR	SBT	SBR
Lane Group Flow (vph)	125	453	16	3	900	47	51	11	91	353
v/c Ratio	0.58	0.28	0.02	0.01	0.56	0.06	0.11	0.02	0.21	0.63
Control Delay	24.5	8.7	3.3	8.3	11.0	3.6	12.4	2.7	13.4	16.9
Queue Delay	0.0	0.0	0.0	0.0	0.0	0.0	0.0	0.0	0.0	0.0
Total Delay	24.5	8.7	3.3	8.3	11.0	3.6	12.4	2.7	13.4	16.9
Queue Length 50th (ft)	21	33	0	0	77	0	10	0	18	65
Queue Length 95th (ft)	#106	80	7	5	173	15	30	5	47	145
Internal Link Dist (ft)		2031			726		424		524	
Turn Bay Length (ft)	485		275	235		275				235
Base Capacity (vph)	314	2339	1054	604	2339	1062	940	1081	913	1093
Starvation Cap Reductn	0	0	0	0	0	0	0	0	0	0
Spillback Cap Reductn	0	0	0	0	0	0	0	0	0	0
Storage Cap Reductn	0	0	0	0	0	0	0	0	0	0
Reduced v/c Ratio	0.40	0.19	0.02	0.00	0.38	0.04	0.05	0.01	0.10	0.32

Intersection Summary

95th percentile volume exceeds capacity, queue may be longer.
Queue shown is maximum after two cycles.

Movement	EBL	EBT	EBR	WBL	WBT	WBR	NBL	NBT	NBR	SBL	SBT	SBR
Lane Configurations												
Traffic Volume (veh/h)	92	292	15	3	726	32	45	2	10	61	2	236
Future Volume (veh/h)	115	417	15	3	828	43	45	2	10	82	2	325
Initial Q (Qb), veh	0	0	0	0	0	0	0	0	0	0	0	0
Ped-Bike Adj(A_pbT)	1.00		1.00	1.00		1.00	1.00		1.00	1.00		1.00
Parking Bus, Adj	1.00	1.00	1.00	1.00	1.00	1.00	1.00	1.00	1.00	1.00	1.00	1.00
Work Zone On Approach		No			No			No			No	
Adj Sat Flow, veh/h/ln	1870	1870	1870	1870	1870	1870	1870	1870	1870	1870	1870	1870
Adj Flow Rate, veh/h	125	453	16	3	900	47	49	2	11	89	2	353
Peak Hour Factor	0.92	0.92	0.92	0.92	0.92	0.92	0.92	0.92	0.92	0.92	0.92	0.92
Percent Heavy Veh, %	2	2	2	2	2	2	2	2	2	2	2	2
Cap, veh/h	245	1503	671	424	1503	671	109	2	695	110	1	695
Arrive On Green	0.42	0.42	0.42	0.42	0.42	0.42	0.44	0.44	0.44	0.44	0.44	0.44
Sat Flow, veh/h	592	3554	1585	924	3554	1585	0	5	1585	0	3	1585
Grp Volume(v), veh/h	125	453	16	3	900	47	51	0	11	91	0	353
Grp Sat Flow(s),veh/h/ln	592	1777	1585	924	1777	1585	6	0	1585	3	0	1585
Q Serve(g_s), s	13.4	5.5	0.4	0.1	12.7	1.1	0.0	0.0	0.3	0.0	0.0	10.5
Cycle Q Clear(g_c), s	26.2	5.5	0.4	5.6	12.7	1.1	28.5	0.0	0.3	28.5	0.0	10.5
Prop In Lane	1.00		1.00	1.00		1.00	0.96		1.00	0.98		1.00
Lane Grp Cap(c), veh/h	245	1503	671	424	1503	671	111	0	695	111	0	695
V/C Ratio(X)	0.51	0.30	0.02	0.01	0.60	0.07	0.46	0.00	0.02	0.82	0.00	0.51
Avail Cap(c_a), veh/h	245	1504	671	424	1504	671	111	0	695	111	0	695
HCM Platoon Ratio	1.00	1.00	1.00	1.00	1.00	1.00	1.00	1.00	1.00	1.00	1.00	1.00
Upstream Filter(I)	1.00	1.00	1.00	1.00	1.00	1.00	1.00	0.00	1.00	1.00	0.00	1.00
Uniform Delay (d), s/veh	24.6	12.4	10.9	14.3	14.5	11.1	31.2	0.0	10.3	32.1	0.0	13.2
Incr Delay (d2), s/veh	1.7	0.1	0.0	0.0	0.7	0.0	2.9	0.0	0.0	36.4	0.0	0.6
Initial Q Delay(d3),s/veh	0.0	0.0	0.0	0.0	0.0	0.0	0.0	0.0	0.0	0.0	0.0	0.0
%ile BackOfQ(50%),veh/ln	1.9	2.0	0.1	0.0	4.7	0.4	0.9	0.0	0.1	2.5	0.0	3.4
Unsig. Movement Delay, s/veh												
LnGrp Delay(d),s/veh	26.3	12.5	10.9	14.3	15.1	11.2	34.1	0.0	10.3	68.5	0.0	13.8
LnGrp LOS	C	B	B	B	B	B	C	A	B	E	A	B
Approach Vol, veh/h		594			950			62			444	
Approach Delay, s/veh		15.4			14.9			29.9			25.0	
Approach LOS		B			B			C			C	

Timer - Assigned Phs	2	4	6	8
Phs Duration (G+Y+Rc), s	33.0	32.0	33.0	32.0
Change Period (Y+Rc), s	4.5	4.5	4.5	4.5
Max Green Setting (Gmax), s	28.5	27.5	28.5	27.5
Max Q Clear Time (g_c+I1), s	30.5	28.2	30.5	14.7
Green Ext Time (p_c), s	0.0	0.0	0.0	5.3

Intersection Summary	
HCM 6th Ctrl Delay	17.7
HCM 6th LOS	B

Lane Group	EBL	EBT	EBR	WBL	WBT	WBR	NBL	NBT	NBR	SBL	SBT	SBR
Lane Group Flow (vph)	71	352	20	10	478	7	50	5	10	16	5	220
v/c Ratio	0.22	0.27	0.03	0.03	0.37	0.01	0.13	0.01	0.02	0.04	0.01	0.38
Control Delay	7.4	6.1	2.6	5.4	6.7	1.2	8.6	7.4	2.3	7.8	7.4	3.8
Queue Delay	0.0	0.0	0.0	0.0	0.0	0.0	0.0	0.0	0.0	0.0	0.0	0.0
Total Delay	7.4	6.1	2.6	5.4	6.7	1.2	8.6	7.4	2.3	7.8	7.4	3.8
Queue Length 50th (ft)	5	13	0	1	18	0	4	0	0	1	0	0
Queue Length 95th (ft)	19	30	5	5	40	2	17	2	3	8	2	23
Internal Link Dist (ft)		2061			2031			478			1056	
Turn Bay Length (ft)	325		275	275		275	250		275	250		275
Base Capacity (vph)	878	3483	1558	992	3483	1558	1383	3483	1558	1383	3483	1561
Starvation Cap Reductn	0	0	0	0	0	0	0	0	0	0	0	0
Spillback Cap Reductn	0	0	0	0	0	0	0	0	0	0	0	0
Storage Cap Reductn	0	0	0	0	0	0	0	0	0	0	0	0
Reduced v/c Ratio	0.08	0.10	0.01	0.01	0.14	0.00	0.04	0.00	0.01	0.01	0.00	0.14

Intersection Summary

Movement	EBL	EBT	EBR	WBL	WBT	WBR	NBL	NBT	NBR	SBL	SBT	SBR
Lane Configurations												
Traffic Volume (veh/h)	24	176	20	10	249	6	50	5	10	15	5	78
Future Volume (veh/h)	65	324	20	10	440	6	50	5	10	15	5	202
Initial Q (Qb), veh	0	0	0	0	0	0	0	0	0	0	0	0
Ped-Bike Adj(A_pbT)	1.00		1.00	1.00		1.00	1.00		1.00	1.00		1.00
Parking Bus, Adj	1.00	1.00	1.00	1.00	1.00	1.00	1.00	1.00	1.00	1.00	1.00	1.00
Work Zone On Approach		No			No			No			No	
Adj Sat Flow, veh/h/ln	1870	1870	1870	1870	1870	1870	1870	1870	1870	1870	1870	1870
Adj Flow Rate, veh/h	71	352	20	10	478	7	50	5	10	16	5	220
Peak Hour Factor	0.92	0.92	1.00	1.00	0.92	0.92	1.00	1.00	1.00	0.92	1.00	0.92
Percent Heavy Veh, %	2	2	2	2	2	2	2	2	2	2	2	2
Cap, veh/h	557	1301	580	612	1301	580	592	863	385	651	863	385
Arrive On Green	0.37	0.37	0.37	0.37	0.37	0.37	0.24	0.24	0.24	0.24	0.24	0.24
Sat Flow, veh/h	911	3554	1585	1010	3554	1585	1156	3554	1585	1398	3554	1585
Grp Volume(v), veh/h	71	352	20	10	478	7	50	5	10	16	5	220
Grp Sat Flow(s),veh/h/ln	911	1777	1585	1010	1777	1585	1156	1777	1585	1398	1777	1585
Q Serve(g_s), s	1.4	1.6	0.2	0.2	2.3	0.1	0.8	0.0	0.1	0.2	0.0	2.8
Cycle Q Clear(g_c), s	3.7	1.6	0.2	1.8	2.3	0.1	0.8	0.0	0.1	0.2	0.0	2.8
Prop In Lane	1.00		1.00	1.00		1.00	1.00		1.00	1.00		1.00
Lane Grp Cap(c), veh/h	557	1301	580	612	1301	580	592	863	385	651	863	385
V/C Ratio(X)	0.13	0.27	0.03	0.02	0.37	0.01	0.08	0.01	0.03	0.02	0.01	0.57
Avail Cap(c_a), veh/h	1331	4323	1928	1472	4323	1928	1718	4323	1928	2013	4323	1928
HCM Platoon Ratio	1.00	1.00	1.00	1.00	1.00	1.00	1.00	1.00	1.00	1.00	1.00	1.00
Upstream Filter(I)	1.00	1.00	1.00	1.00	1.00	1.00	1.00	1.00	1.00	1.00	1.00	1.00
Uniform Delay (d), s/veh	6.7	5.1	4.7	5.8	5.3	4.6	6.9	6.6	6.6	6.7	6.6	7.7
Incr Delay (d2), s/veh	0.1	0.1	0.0	0.0	0.2	0.0	0.1	0.0	0.0	0.0	0.0	1.3
Initial Q Delay(d3),s/veh	0.0	0.0	0.0	0.0	0.0	0.0	0.0	0.0	0.0	0.0	0.0	0.0
%ile BackOfQ(50%),veh/ln	0.2	0.2	0.0	0.0	0.4	0.0	0.1	0.0	0.0	0.0	0.0	0.6
Unsig. Movement Delay, s/veh												
LnGrp Delay(d),s/veh	6.8	5.2	4.7	5.8	5.5	4.7	7.0	6.6	6.7	6.7	6.6	9.0
LnGrp LOS	A	A	A	A	A	A	A	A	A	A	A	A
Approach Vol, veh/h		443			495			65			241	
Approach Delay, s/veh		5.5			5.5			6.9			8.8	
Approach LOS		A			A			A			A	

Timer - Assigned Phs		2		4		6		8				
Phs Duration (G+Y+Rc), s		10.1		12.9		10.1		12.9				
Change Period (Y+Rc), s		4.5		4.5		4.5		4.5				
Max Green Setting (Gmax), s		28.0		28.0		28.0		28.0				
Max Q Clear Time (g_c+I1), s		2.8		5.7		4.8		4.3				
Green Ext Time (p_c), s		0.2		2.8		0.8		3.3				

Intersection Summary												
HCM 6th Ctrl Delay			6.2									
HCM 6th LOS			A									

Lane Group	EBL	EBT	EBR	WBL	WBT	WBR	NBL	NBT	NBR	SBL	SBT	SBR
Lane Group Flow (vph)	66	418	25	35	698	12	100	5	25	12	5	124
v/c Ratio	0.22	0.28	0.04	0.09	0.47	0.02	0.27	0.01	0.06	0.03	0.01	0.26
Control Delay	7.6	6.2	2.7	5.8	7.3	1.6	12.1	9.8	5.4	10.0	9.8	6.6
Queue Delay	0.0	0.0	0.0	0.0	0.0	0.0	0.0	0.0	0.0	0.0	0.0	0.0
Total Delay	7.6	6.2	2.7	5.8	7.3	1.6	12.1	9.8	5.4	10.0	9.8	6.6
Queue Length 50th (ft)	5	18	0	3	34	0	11	1	0	1	1	5
Queue Length 95th (ft)	22	41	7	13	71	3	44	6	11	10	6	33
Internal Link Dist (ft)		1938			2061			454			615	
Turn Bay Length (ft)	300		275	275		250	275		275	275		125
Base Capacity (vph)	538	2652	1193	707	2652	1193	1307	1733	1474	1307	1733	1478
Starvation Cap Reductn	0	0	0	0	0	0	0	0	0	0	0	0
Spillback Cap Reductn	0	0	0	0	0	0	0	0	0	0	0	0
Storage Cap Reductn	0	0	0	0	0	0	0	0	0	0	0	0
Reduced v/c Ratio	0.12	0.16	0.02	0.05	0.26	0.01	0.08	0.00	0.02	0.01	0.00	0.08

Intersection Summary

Movement	EBL	EBT	EBR	WBL	WBT	WBR	NBL	NBT	NBR	SBL	SBT	SBR
Lane Configurations												
Traffic Volume (veh/h)	61	196	25	35	327	11	100	5	25	11	5	114
Future Volume (veh/h)	61	385	25	35	642	11	100	5	25	11	5	114
Initial Q (Qb), veh	0	0	0	0	0	0	0	0	0	0	0	0
Ped-Bike Adj(A_pbT)	1.00		1.00	1.00		1.00	1.00		1.00	1.00		1.00
Parking Bus, Adj	1.00	1.00	1.00	1.00	1.00	1.00	1.00	1.00	1.00	1.00	1.00	1.00
Work Zone On Approach		No			No			No			No	
Adj Sat Flow, veh/h/ln	1870	1870	1870	1870	1870	1870	1870	1870	1870	1870	1870	1870
Adj Flow Rate, veh/h	66	418	25	35	698	12	100	5	25	12	5	124
Peak Hour Factor	0.92	0.92	1.00	1.00	0.92	0.92	1.00	1.00	1.00	0.92	1.00	0.92
Percent Heavy Veh, %	2	2	2	2	2	2	2	2	2	2	2	2
Cap, veh/h	503	1482	661	621	1482	661	560	389	330	584	389	330
Arrive On Green	0.42	0.42	0.42	0.42	0.42	0.42	0.21	0.21	0.21	0.21	0.21	0.21
Sat Flow, veh/h	739	3554	1585	947	3554	1585	1261	1870	1585	1380	1870	1585
Grp Volume(v), veh/h	66	418	25	35	698	12	100	5	25	12	5	124
Grp Sat Flow(s),veh/h/ln	739	1777	1585	947	1777	1585	1261	1870	1585	1380	1870	1585
Q Serve(g_s), s	1.7	1.9	0.2	0.6	3.4	0.1	1.6	0.1	0.3	0.2	0.1	1.6
Cycle Q Clear(g_c), s	5.1	1.9	0.2	2.5	3.4	0.1	1.7	0.1	0.3	0.2	0.1	1.6
Prop In Lane	1.00		1.00	1.00		1.00	1.00		1.00	1.00		1.00
Lane Grp Cap(c), veh/h	503	1482	661	621	1482	661	560	389	330	584	389	330
V/C Ratio(X)	0.13	0.28	0.04	0.06	0.47	0.02	0.18	0.01	0.08	0.02	0.01	0.38
Avail Cap(c_a), veh/h	856	3181	1419	1074	3181	1419	1846	2297	1947	1992	2297	1947
HCM Platoon Ratio	1.00	1.00	1.00	1.00	1.00	1.00	1.00	1.00	1.00	1.00	1.00	1.00
Upstream Filter(I)	1.00	1.00	1.00	1.00	1.00	1.00	1.00	1.00	1.00	1.00	1.00	1.00
Uniform Delay (d), s/veh	6.9	4.6	4.1	5.4	5.1	4.1	8.2	7.5	7.6	7.6	7.5	8.2
Incr Delay (d2), s/veh	0.1	0.1	0.0	0.0	0.2	0.0	0.2	0.0	0.1	0.0	0.0	0.7
Initial Q Delay(d3),s/veh	0.0	0.0	0.0	0.0	0.0	0.0	0.0	0.0	0.0	0.0	0.0	0.0
%ile BackOfQ(50%),veh/ln	0.2	0.3	0.0	0.1	0.5	0.0	0.3	0.0	0.1	0.0	0.0	0.4
Unsig. Movement Delay, s/veh												
LnGrp Delay(d),s/veh	7.1	4.7	4.2	5.5	5.3	4.1	8.4	7.6	7.7	7.6	7.6	8.9
LnGrp LOS	A	A	A	A	A	A	A	A	A	A	A	A
Approach Vol, veh/h		509			745			130			141	
Approach Delay, s/veh		5.0			5.3			8.2			8.7	
Approach LOS		A			A			A			A	

Timer - Assigned Phs	2	4	6	8
Phs Duration (G+Y+Rc), s	9.5	14.5	9.5	14.5
Change Period (Y+Rc), s	4.5	4.5	4.5	4.5
Max Green Setting (Gmax), s	29.5	21.5	29.5	21.5
Max Q Clear Time (g_c+I1), s	3.7	7.1	3.6	5.4
Green Ext Time (p_c), s	0.4	2.9	0.4	4.6

Intersection Summary	
HCM 6th Ctrl Delay	5.8
HCM 6th LOS	A

Lane Group	WBL	WBR	NBT	NBR	SBL	SBT
Lane Group Flow (vph)	1202	527	836	505	185	1195
v/c Ratio	0.93	0.61	0.70	0.32	0.65	0.68
Control Delay	35.8	14.1	24.0	0.5	22.7	16.0
Queue Delay	0.0	0.0	0.0	0.0	0.0	0.0
Total Delay	35.8	14.1	24.0	0.5	22.7	16.0
Queue Length 50th (ft)	248	132	162	0	42	194
Queue Length 95th (ft)	#378	226	224	0	#100	263
Internal Link Dist (ft)	1938		1222			1449
Turn Bay Length (ft)	325			150	1000	
Base Capacity (vph)	1306	863	1189	1583	284	1753
Starvation Cap Reductn	0	0	0	0	0	0
Spillback Cap Reductn	0	0	0	0	0	0
Storage Cap Reductn	0	0	0	0	0	0
Reduced v/c Ratio	0.92	0.61	0.70	0.32	0.65	0.68

Intersection Summary

95th percentile volume exceeds capacity, queue may be longer.
Queue shown is maximum after two cycles.

Movement	WBL	WBR	NBT	NBR	SBL	SBT
Lane Configurations						
Traffic Volume (veh/h)	791	485	538	276	170	856
Future Volume (veh/h)	1106	485	769	465	170	1099
Initial Q (Qb), veh	0	0	0	0	0	0
Ped-Bike Adj(A_pbT)	1.00	1.00		1.00	1.00	
Parking Bus, Adj	1.00	1.00	1.00	1.00	1.00	1.00
Work Zone On Approach	No		No			No
Adj Sat Flow, veh/h/ln	1870	1870	1870	1870	1870	1870
Adj Flow Rate, veh/h	1202	527	836	0	185	1195
Peak Hour Factor	0.92	0.92	0.92	0.92	0.92	0.92
Percent Heavy Veh, %	2	2	2	2	2	2
Cap, veh/h	1298	736	1214		353	1760
Arrive On Green	0.38	0.38	0.34	0.00	0.09	0.50
Sat Flow, veh/h	3456	1585	3647	1585	1781	3647
Grp Volume(v), veh/h	1202	527	836	0	185	1195
Grp Sat Flow(s),veh/h/ln	1728	1585	1777	1585	1781	1777
Q Serve(g_s), s	23.2	18.6	14.1	0.0	4.4	17.8
Cycle Q Clear(g_c), s	23.2	18.6	14.1	0.0	4.4	17.8
Prop In Lane	1.00	1.00		1.00	1.00	
Lane Grp Cap(c), veh/h	1298	736	1214		353	1760
V/C Ratio(X)	0.93	0.72	0.69		0.52	0.68
Avail Cap(c_a), veh/h	1315	744	1214		364	1760
HCM Platoon Ratio	1.00	1.00	1.00	1.00	1.00	1.00
Upstream Filter(I)	1.00	1.00	1.00	0.00	1.00	1.00
Uniform Delay (d), s/veh	20.8	15.0	19.7	0.0	13.9	13.4
Incr Delay (d2), s/veh	11.3	3.3	3.2	0.0	1.3	2.1
Initial Q Delay(d3),s/veh	0.0	0.0	0.0	0.0	0.0	0.0
%ile BackOfQ(50%),veh/ln	10.5	6.6	5.9	0.0	1.7	6.7
Unsig. Movement Delay, s/veh						
LnGrp Delay(d),s/veh	32.1	18.2	22.9	0.0	15.2	15.5
LnGrp LOS	C	B	C		B	B
Approach Vol, veh/h	1729		836	A		1380
Approach Delay, s/veh	27.9		22.9			15.5
Approach LOS	C		C			B

Timer - Assigned Phs	1	2				6	8
Phs Duration (G+Y+Rc), s	10.7	28.3				39.0	30.7
Change Period (Y+Rc), s	4.5	4.5				4.5	4.5
Max Green Setting (Gmax), s	6.6	23.4				34.5	26.5
Max Q Clear Time (g_c+I1), s	6.4	16.1				19.8	25.2
Green Ext Time (p_c), s	0.0	3.3				7.5	1.0

Intersection Summary	
HCM 6th Ctrl Delay	22.5
HCM 6th LOS	C

Notes

Unsignalized Delay for [NBR] is excluded from calculations of the approach delay and intersection delay.

Intersection	
Int Delay, s/veh	3.2

Movement	EBT	EBR	WBL	WBT	NBL	NBR
Lane Configurations						
Traffic Vol, veh/h	130	0	0	253	0	0
Future Vol, veh/h	380	122	27	520	158	38
Conflicting Peds, #/hr	0	0	0	0	0	0
Sign Control	Free	Free	Free	Free	Stop	Stop
RT Channelized	-	None	-	None	-	None
Storage Length	-	235	235	-	200	0
Veh in Median Storage, #	0	-	-	0	0	-
Grade, %	0	-	-	0	0	-
Peak Hour Factor	100	100	100	100	100	100
Heavy Vehicles, %	2	2	2	2	2	2
Mvmt Flow	380	122	27	520	158	38

Major/Minor	Major1		Major2		Minor1	
Conflicting Flow All	0	0	502	0	694	190
Stage 1	-	-	-	-	380	-
Stage 2	-	-	-	-	314	-
Critical Hdwy	-	-	4.14	-	6.84	6.94
Critical Hdwy Stg 1	-	-	-	-	5.84	-
Critical Hdwy Stg 2	-	-	-	-	5.84	-
Follow-up Hdwy	-	-	2.22	-	3.52	3.32
Pot Cap-1 Maneuver	-	-	1059	-	377	820
Stage 1	-	-	-	-	661	-
Stage 2	-	-	-	-	714	-
Platoon blocked, %	-	-		-		
Mov Cap-1 Maneuver	-	-	1059	-	368	820
Mov Cap-2 Maneuver	-	-	-	-	368	-
Stage 1	-	-	-	-	661	-
Stage 2	-	-	-	-	696	-

Approach	EB	WB	NB
HCM Control Delay, s	0	0.4	19.5
HCM LOS			C

Minor Lane/Major Mvmt	NBLn1	NBLn2	EBT	EBR	WBL	WBT
Capacity (veh/h)	368	820	-	-	1059	-
HCM Lane V/C Ratio	0.429	0.046	-	-	0.025	-
HCM Control Delay (s)	21.9	9.6	-	-	8.5	-
HCM Lane LOS	C	A	-	-	A	-
HCM 95th %tile Q(veh)	2.1	0.1	-	-	0.1	-

Intersection	
Int Delay, s/veh	5

Movement	EBT	EBR	WBL	WBT	NBL	NBR
Lane Configurations						
Traffic Vol, veh/h	130	0	0	253	0	0
Future Vol, veh/h	226	192	21	278	269	23
Conflicting Peds, #/hr	0	0	0	0	0	0
Sign Control	Free	Free	Free	Free	Stop	Stop
RT Channelized	-	None	-	None	-	None
Storage Length	-	235	235	-	0	0
Veh in Median Storage, #	0	-	-	0	0	-
Grade, %	0	-	-	0	0	-
Peak Hour Factor	100	100	100	100	100	100
Heavy Vehicles, %	2	2	2	2	2	2
Mvmt Flow	226	192	21	278	269	23

Major/Minor	Major1		Major2		Minor1	
Conflicting Flow All	0	0	418	0	407	113
Stage 1	-	-	-	-	226	-
Stage 2	-	-	-	-	181	-
Critical Hdwy	-	-	4.14	-	6.84	6.94
Critical Hdwy Stg 1	-	-	-	-	5.84	-
Critical Hdwy Stg 2	-	-	-	-	5.84	-
Follow-up Hdwy	-	-	2.22	-	3.52	3.32
Pot Cap-1 Maneuver	-	-	1138	-	572	918
Stage 1	-	-	-	-	790	-
Stage 2	-	-	-	-	832	-
Platoon blocked, %	-	-		-		
Mov Cap-1 Maneuver	-	-	1138	-	562	918
Mov Cap-2 Maneuver	-	-	-	-	562	-
Stage 1	-	-	-	-	790	-
Stage 2	-	-	-	-	817	-

Approach	EB	WB	NB
HCM Control Delay, s	0	0.6	16.5
HCM LOS			C

Minor Lane/Major Mvmt	NBLn1	NBLn2	EBT	EBR	WBL	WBT
Capacity (veh/h)	562	918	-	-	1138	-
HCM Lane V/C Ratio	0.479	0.025	-	-	0.018	-
HCM Control Delay (s)	17.1	9	-	-	8.2	-
HCM Lane LOS	C	A	-	-	A	-
HCM 95th %tile Q(veh)	2.6	0.1	-	-	0.1	-

Intersection	
Int Delay, s/veh	4.4

Movement	EBL	EBT	EBR	WBL	WBT	WBR	NBL	NBT	NBR	SBL	SBT	SBR
Lane Configurations												
Traffic Vol, veh/h	0	0	0	0	0	0	0	0	0	0	0	0
Future Vol, veh/h	84	0	13	14	0	40	13	72	11	13	24	112
Conflicting Peds, #/hr	0	0	0	0	0	0	0	0	0	0	0	0
Sign Control	Stop	Stop	Stop	Stop	Stop	Stop	Free	Free	Free	Free	Free	Free
RT Channelized	-	-	None	-	-	None	-	-	None	-	-	None
Storage Length	-	-	-	-	-	-	-	-	-	-	-	-
Veh in Median Storage, #	-	0	-	-	0	-	-	0	-	-	0	-
Grade, %	-	0	-	-	0	-	-	0	-	-	0	-
Peak Hour Factor	100	100	100	100	100	100	100	100	100	100	100	100
Heavy Vehicles, %	2	2	2	2	2	2	2	2	2	2	2	2
Mvmt Flow	84	0	13	14	0	40	13	72	11	13	24	112

Major/Minor	Minor2			Minor1			Major1			Major2		
Conflicting Flow All	230	215	80	217	266	78	136	0	0	83	0	0
Stage 1	106	106	-	104	104	-	-	-	-	-	-	-
Stage 2	124	109	-	113	162	-	-	-	-	-	-	-
Critical Hdwy	7.12	6.52	6.22	7.12	6.52	6.22	4.12	-	-	4.12	-	-
Critical Hdwy Stg 1	6.12	5.52	-	6.12	5.52	-	-	-	-	-	-	-
Critical Hdwy Stg 2	6.12	5.52	-	6.12	5.52	-	-	-	-	-	-	-
Follow-up Hdwy	3.518	4.018	3.318	3.518	4.018	3.318	2.218	-	-	2.218	-	-
Pot Cap-1 Maneuver	725	683	980	739	640	983	1448	-	-	1514	-	-
Stage 1	900	807	-	902	809	-	-	-	-	-	-	-
Stage 2	880	805	-	892	764	-	-	-	-	-	-	-
Platoon blocked, %								-	-		-	-
Mov Cap-1 Maneuver	686	671	980	719	628	983	1448	-	-	1514	-	-
Mov Cap-2 Maneuver	686	671	-	719	628	-	-	-	-	-	-	-
Stage 1	892	800	-	894	802	-	-	-	-	-	-	-
Stage 2	837	798	-	872	757	-	-	-	-	-	-	-

Approach	EB	WB	NB	SB
HCM Control Delay, s	10.8	9.3	1	0.6
HCM LOS	B	A		

Minor Lane/Major Mvmt	NBL	NBT	NBR	EBLn1	WBLn1	SBL	SBT	SBR
Capacity (veh/h)	1448	-	-	715	898	1514	-	-
HCM Lane V/C Ratio	0.009	-	-	0.136	0.06	0.009	-	-
HCM Control Delay (s)	7.5	0	-	10.8	9.3	7.4	0	-
HCM Lane LOS	A	A	-	B	A	A	A	-
HCM 95th %tile Q(veh)	0	-	-	0.5	0.2	0	-	-

Intersection	
Int Delay, s/veh	8

Movement	EBL	EBT	EBR	WBL	WBT	WBR	NBL	NBT	NBR	SBL	SBT	SBR
Lane Configurations												
Traffic Vol, veh/h	0	0	0	0	0	0	0	0	0	0	0	0
Future Vol, veh/h	38	17	69	110	10	58	23	0	85	38	0	13
Conflicting Peds, #/hr	0	0	0	0	0	0	0	0	0	0	0	0
Sign Control	Stop	Stop	Stop	Stop	Stop	Stop	Free	Free	Free	Free	Free	Free
RT Channelized	-	-	None	-	-	None	-	-	None	-	-	None
Storage Length	-	-	-	-	-	-	-	-	-	-	-	-
Veh in Median Storage, #	-	0	-	-	0	-	-	0	-	-	0	-
Grade, %	-	0	-	-	0	-	-	0	-	-	0	-
Peak Hour Factor	100	100	100	100	100	100	100	100	100	100	100	100
Heavy Vehicles, %	2	2	2	2	2	2	2	2	2	2	2	2
Mvmt Flow	38	17	69	110	10	58	23	0	85	38	0	13

Major/Minor	Minor2			Minor1			Major1			Major2		
Conflicting Flow All	206	214	7	215	178	43	13	0	0	85	0	0
Stage 1	83	83	-	89	89	-	-	-	-	-	-	-
Stage 2	123	131	-	126	89	-	-	-	-	-	-	-
Critical Hdwy	7.12	6.52	6.22	7.12	6.52	6.22	4.12	-	-	4.12	-	-
Critical Hdwy Stg 1	6.12	5.52	-	6.12	5.52	-	-	-	-	-	-	-
Critical Hdwy Stg 2	6.12	5.52	-	6.12	5.52	-	-	-	-	-	-	-
Follow-up Hdwy	3.518	4.018	3.318	3.518	4.018	3.318	2.218	-	-	2.218	-	-
Pot Cap-1 Maneuver	752	684	1075	742	716	1027	1606	-	-	1512	-	-
Stage 1	925	826	-	918	821	-	-	-	-	-	-	-
Stage 2	881	788	-	878	821	-	-	-	-	-	-	-
Platoon blocked, %								-	-		-	-
Mov Cap-1 Maneuver	681	657	1075	660	687	1027	1606	-	-	1512	-	-
Mov Cap-2 Maneuver	681	657	-	660	687	-	-	-	-	-	-	-
Stage 1	911	805	-	904	809	-	-	-	-	-	-	-
Stage 2	809	776	-	784	800	-	-	-	-	-	-	-

Approach	EB	WB	NB	SB
HCM Control Delay, s	10	11.3	1.5	5.5
HCM LOS	B	B		

Minor Lane/Major Mvmt	NBL	NBT	NBR	EBLn1	WBLn1	SBL	SBT	SBR
Capacity (veh/h)	1606	-	-	850	749	1512	-	-
HCM Lane V/C Ratio	0.014	-	-	0.146	0.238	0.025	-	-
HCM Control Delay (s)	7.3	0	-	10	11.3	7.4	0	-
HCM Lane LOS	A	A	-	B	B	A	A	-
HCM 95th %tile Q(veh)	0	-	-	0.5	0.9	0.1	-	-

Intersection	
Int Delay, s/veh	1.8

Movement	EBL	EBT	WBT	WBR	SBL	SBR
Lane Configurations						
Traffic Vol, veh/h	0	0	0	0	0	0
Future Vol, veh/h	13	127	139	11	15	39
Conflicting Peds, #/hr	0	0	0	0	0	0
Sign Control	Free	Free	Free	Free	Stop	Stop
RT Channelized	-	None	-	None	-	None
Storage Length	-	-	-	-	-	-
Veh in Median Storage, #	-	0	0	-	0	-
Grade, %	-	0	0	-	0	-
Peak Hour Factor	100	100	100	100	100	100
Heavy Vehicles, %	2	2	2	2	2	2
Mvmt Flow	13	127	139	11	15	39

Major/Minor	Major1		Major2		Minor2	
Conflicting Flow All	150	0	-	0	298	145
Stage 1	-	-	-	-	145	-
Stage 2	-	-	-	-	153	-
Critical Hdwy	4.12	-	-	-	6.42	6.22
Critical Hdwy Stg 1	-	-	-	-	5.42	-
Critical Hdwy Stg 2	-	-	-	-	5.42	-
Follow-up Hdwy	2.218	-	-	-	3.518	3.318
Pot Cap-1 Maneuver	1431	-	-	-	693	902
Stage 1	-	-	-	-	882	-
Stage 2	-	-	-	-	875	-
Platoon blocked, %		-	-	-		
Mov Cap-1 Maneuver	1431	-	-	-	686	902
Mov Cap-2 Maneuver	-	-	-	-	686	-
Stage 1	-	-	-	-	873	-
Stage 2	-	-	-	-	875	-

Approach	EB	WB	SB
HCM Control Delay, s	0.7	0	9.6
HCM LOS			A

Minor Lane/Major Mvmt	EBL	EBT	WBT	WBR	SBLn1
Capacity (veh/h)	1431	-	-	-	829
HCM Lane V/C Ratio	0.009	-	-	-	0.065
HCM Control Delay (s)	7.5	0	-	-	9.6
HCM Lane LOS	A	A	-	-	A
HCM 95th %tile Q(veh)	0	-	-	-	0.2

Intersection	
Int Delay, s/veh	3.7

Movement	EBL	EBT	EBR	WBL	WBT	WBR	NBL	NBT	NBR	SBL	SBT	SBR
Lane Configurations												
Traffic Vol, veh/h	0	0	0	0	0	0	0	0	0	0	0	0
Future Vol, veh/h	6	25	118	175	120	8	0	0	0	5	9	20
Conflicting Peds, #/hr	0	0	0	0	0	0	0	0	0	0	0	0
Sign Control	Free	Free	Free	Free	Free	Free	Stop	Stop	Stop	Stop	Stop	Stop
RT Channelized	-	-	None	-	-	None	-	-	None	-	-	None
Storage Length	-	-	-	-	-	-	-	-	-	-	-	-
Veh in Median Storage, #	-	0	-	-	0	-	-	0	-	-	0	-
Grade, %	-	0	-	-	0	-	-	0	-	-	0	-
Peak Hour Factor	100	100	100	100	100	100	100	100	100	100	100	100
Heavy Vehicles, %	2	2	2	2	2	2	2	2	2	2	2	2
Mvmt Flow	6	25	118	175	120	8	0	0	0	5	9	20

Major/Minor	Major1			Major2			Minor1			Minor2		
Conflicting Flow All	128	0	0	143	0	0	585	574	84	570	629	124
Stage 1	-	-	-	-	-	-	96	96	-	474	474	-
Stage 2	-	-	-	-	-	-	489	478	-	96	155	-
Critical Hdwy	4.12	-	-	4.12	-	-	7.12	6.52	6.22	7.12	6.52	6.22
Critical Hdwy Stg 1	-	-	-	-	-	-	6.12	5.52	-	6.12	5.52	-
Critical Hdwy Stg 2	-	-	-	-	-	-	6.12	5.52	-	6.12	5.52	-
Follow-up Hdwy	2.218	-	-	2.218	-	-	3.518	4.018	3.318	3.518	4.018	3.318
Pot Cap-1 Maneuver	1458	-	-	1440	-	-	422	429	975	432	399	927
Stage 1	-	-	-	-	-	-	911	815	-	571	558	-
Stage 2	-	-	-	-	-	-	561	556	-	911	769	-
Platoon blocked, %		-	-		-	-						
Mov Cap-1 Maneuver	1458	-	-	1440	-	-	363	371	975	387	345	927
Mov Cap-2 Maneuver	-	-	-	-	-	-	363	371	-	387	345	-
Stage 1	-	-	-	-	-	-	906	811	-	568	485	-
Stage 2	-	-	-	-	-	-	468	483	-	906	765	-

Approach	EB	WB	NB	SB
HCM Control Delay, s	0.3	4.5	0	11.8
HCM LOS			A	B

Minor Lane/Major Mvmt	NBLn1	EBL	EBT	EBR	WBL	WBT	WBR	SBLn1
Capacity (veh/h)	-	1458	-	-	1440	-	-	561
HCM Lane V/C Ratio	-	0.004	-	-	0.122	-	-	0.061
HCM Control Delay (s)	0	7.5	0	-	7.8	0	-	11.8
HCM Lane LOS	A	A	A	-	A	A	-	B
HCM 95th %tile Q(veh)	-	0	-	-	0.4	-	-	0.2

Intersection	
Int Delay, s/veh	9

Movement	EBL	EBT	EBR	WBL	WBT	WBR	NBL	NBT	NBR	SBL	SBT	SBR
Lane Configurations												
Traffic Vol, veh/h	0	0	0	0	0	0	0	0	0	0	0	0
Future Vol, veh/h	1	10	19	56	93	1	196	12	90	4	16	14
Conflicting Peds, #/hr	0	0	0	0	0	0	0	0	0	0	0	0
Sign Control	Free	Free	Free	Free	Free	Free	Stop	Stop	Stop	Stop	Stop	Stop
RT Channelized	-	-	None	-	-	None	-	-	None	-	-	None
Storage Length	-	-	-	-	-	-	-	-	-	-	-	-
Veh in Median Storage, #	-	0	-	-	0	-	-	0	-	-	0	-
Grade, %	-	0	-	-	0	-	-	0	-	-	0	-
Peak Hour Factor	100	100	100	100	100	100	100	100	100	100	100	100
Heavy Vehicles, %	2	2	2	2	2	2	2	2	2	2	2	2
Mvmt Flow	1	10	19	56	93	1	196	12	90	4	16	14

Major/Minor	Major1			Major2			Minor1			Minor2		
Conflicting Flow All	94	0	0	29	0	0	243	228	20	279	237	94
Stage 1	-	-	-	-	-	-	22	22	-	206	206	-
Stage 2	-	-	-	-	-	-	221	206	-	73	31	-
Critical Hdwy	4.12	-	-	4.12	-	-	7.12	6.52	6.22	7.12	6.52	6.22
Critical Hdwy Stg 1	-	-	-	-	-	-	6.12	5.52	-	6.12	5.52	-
Critical Hdwy Stg 2	-	-	-	-	-	-	6.12	5.52	-	6.12	5.52	-
Follow-up Hdwy	2.218	-	-	2.218	-	-	3.518	4.018	3.318	3.518	4.018	3.318
Pot Cap-1 Maneuver	1500	-	-	1584	-	-	711	671	1058	673	664	963
Stage 1	-	-	-	-	-	-	996	877	-	796	731	-
Stage 2	-	-	-	-	-	-	781	731	-	937	869	-
Platoon blocked, %		-	-		-	-						
Mov Cap-1 Maneuver	1500	-	-	1584	-	-	668	646	1058	590	639	963
Mov Cap-2 Maneuver	-	-	-	-	-	-	668	646	-	590	639	-
Stage 1	-	-	-	-	-	-	995	876	-	795	704	-
Stage 2	-	-	-	-	-	-	724	704	-	845	868	-

Approach	EB	WB	NB	SB
HCM Control Delay, s	0.2	2.7	12.9	10.2
HCM LOS			B	B

Minor Lane/Major Mvmt	NBLn1	EBL	EBT	EBR	WBL	WBT	WBR	SBLn1
Capacity (veh/h)	751	1500	-	-	1584	-	-	733
HCM Lane V/C Ratio	0.397	0.001	-	-	0.035	-	-	0.046
HCM Control Delay (s)	12.9	7.4	0	-	7.4	0	-	10.2
HCM Lane LOS	B	A	A	-	A	A	-	B
HCM 95th %tile Q(veh)	1.9	0	-	-	0.1	-	-	0.1

Intersection	
Int Delay, s/veh	7

Movement	EBL	EBT	EBR	WBL	WBT	WBR	NBL	NBT	NBR	SBL	SBT	SBR
Lane Configurations												
Traffic Vol, veh/h	0	0	0	0	0	0	0	0	0	0	0	0
Future Vol, veh/h	183	7	55	24	0	22	0	93	8	5	86	0
Conflicting Peds, #/hr	0	0	0	0	0	0	0	0	0	0	0	0
Sign Control	Stop	Stop	Stop	Stop	Stop	Stop	Free	Free	Free	Free	Free	Free
RT Channelized	-	-	None	-	-	None	-	-	None	-	-	None
Storage Length	-	-	-	-	-	-	-	-	-	-	-	-
Veh in Median Storage, #	-	0	-	-	0	-	-	0	-	-	0	-
Grade, %	-	0	-	-	0	-	-	0	-	-	0	-
Peak Hour Factor	100	100	100	100	100	100	100	100	100	100	100	100
Heavy Vehicles, %	2	2	2	2	2	2	2	2	2	2	2	2
Mvmt Flow	183	7	55	24	0	22	0	93	8	5	86	0

Major/Minor	Minor2			Minor1			Major1			Major2		
Conflicting Flow All	204	197	86	224	193	97	86	0	0	101	0	0
Stage 1	96	96	-	97	97	-	-	-	-	-	-	-
Stage 2	108	101	-	127	96	-	-	-	-	-	-	-
Critical Hdwy	7.12	6.52	6.22	7.12	6.52	6.22	4.12	-	-	4.12	-	-
Critical Hdwy Stg 1	6.12	5.52	-	6.12	5.52	-	-	-	-	-	-	-
Critical Hdwy Stg 2	6.12	5.52	-	6.12	5.52	-	-	-	-	-	-	-
Follow-up Hdwy	3.518	4.018	3.318	3.518	4.018	3.318	2.218	-	-	2.218	-	-
Pot Cap-1 Maneuver	754	699	973	732	702	959	1510	-	-	1491	-	-
Stage 1	911	815	-	910	815	-	-	-	-	-	-	-
Stage 2	897	811	-	877	815	-	-	-	-	-	-	-
Platoon blocked, %								-	-		-	-
Mov Cap-1 Maneuver	734	696	973	683	699	959	1510	-	-	1491	-	-
Mov Cap-2 Maneuver	734	696	-	683	699	-	-	-	-	-	-	-
Stage 1	911	812	-	910	815	-	-	-	-	-	-	-
Stage 2	876	811	-	817	812	-	-	-	-	-	-	-

Approach	EB	WB	NB	SB
HCM Control Delay, s	11.8	9.8	0	0.4
HCM LOS	B	A		

Minor Lane/Major Mvmt	NBL	NBT	NBR	EBLn1	WBLn1	SBL	SBT	SBR
Capacity (veh/h)	1510	-	-	776	792	1491	-	-
HCM Lane V/C Ratio	-	-	-	0.316	0.058	0.003	-	-
HCM Control Delay (s)	0	-	-	11.8	9.8	7.4	0	-
HCM Lane LOS	A	-	-	B	A	A	A	-
HCM 95th %tile Q(veh)	0	-	-	1.4	0.2	0	-	-

Intersection	
Int Delay, s/veh	3

Movement	EBL	EBT	EBR	WBL	WBT	WBR	NBL	NBT	NBR	SBL	SBT	SBR
Lane Configurations												
Traffic Vol, veh/h	0	0	0	0	0	0	0	0	0	0	0	0
Future Vol, veh/h	14	76	14	6	101	3	31	0	13	12	0	18
Conflicting Peds, #/hr	0	0	0	0	0	0	0	0	0	0	0	0
Sign Control	Free	Free	Free	Free	Free	Free	Stop	Stop	Stop	Stop	Stop	Stop
RT Channelized	-	-	None	-	-	None	-	-	None	-	-	None
Storage Length	-	-	-	-	-	-	-	-	-	-	-	-
Veh in Median Storage, #	-	0	-	-	0	-	-	0	-	-	0	-
Grade, %	-	0	-	-	0	-	-	0	-	-	0	-
Peak Hour Factor	100	100	100	100	100	100	100	100	100	100	100	100
Heavy Vehicles, %	2	2	2	2	2	2	2	2	2	2	2	2
Mvmt Flow	14	76	14	6	101	3	31	0	13	12	0	18

Major/Minor	Major1			Major2			Minor1			Minor2		
Conflicting Flow All	104	0	0	90	0	0	235	227	83	233	233	103
Stage 1	-	-	-	-	-	-	111	111	-	115	115	-
Stage 2	-	-	-	-	-	-	124	116	-	118	118	-
Critical Hdwy	4.12	-	-	4.12	-	-	7.12	6.52	6.22	7.12	6.52	6.22
Critical Hdwy Stg 1	-	-	-	-	-	-	6.12	5.52	-	6.12	5.52	-
Critical Hdwy Stg 2	-	-	-	-	-	-	6.12	5.52	-	6.12	5.52	-
Follow-up Hdwy	2.218	-	-	2.218	-	-	3.518	4.018	3.318	3.518	4.018	3.318
Pot Cap-1 Maneuver	1488	-	-	1505	-	-	720	672	976	722	667	952
Stage 1	-	-	-	-	-	-	894	804	-	890	800	-
Stage 2	-	-	-	-	-	-	880	800	-	887	798	-
Platoon blocked, %		-	-		-	-						
Mov Cap-1 Maneuver	1488	-	-	1505	-	-	699	663	976	705	658	952
Mov Cap-2 Maneuver	-	-	-	-	-	-	699	663	-	705	658	-
Stage 1	-	-	-	-	-	-	885	796	-	881	797	-
Stage 2	-	-	-	-	-	-	860	797	-	866	790	-

Approach	EB	WB	NB	SB
HCM Control Delay, s	1	0.4	10	9.5
HCM LOS			B	A

Minor Lane/Major Mvmt	NBLn1	EBL	EBT	EBR	WBL	WBT	WBR	SBLn1
Capacity (veh/h)	763	1488	-	-	1505	-	-	835
HCM Lane V/C Ratio	0.058	0.009	-	-	0.004	-	-	0.036
HCM Control Delay (s)	10	7.4	0	-	7.4	0	-	9.5
HCM Lane LOS	B	A	A	-	A	A	-	A
HCM 95th %tile Q(veh)	0.2	0	-	-	0	-	-	0.1

Intersection	
Int Delay, s/veh	3.3

Movement	EBL	EBT	EBR	WBL	WBT	WBR	NBL	NBT	NBR	SBL	SBT	SBR
Lane Configurations												
Traffic Vol, veh/h	0	0	0	0	0	0	0	0	0	0	0	0
Future Vol, veh/h	10	84	7	13	63	6	29	0	15	8	0	18
Conflicting Peds, #/hr	0	0	0	0	0	0	0	0	0	0	0	0
Sign Control	Free	Free	Free	Free	Free	Free	Stop	Stop	Stop	Stop	Stop	Stop
RT Channelized	-	-	None	-	-	None	-	-	None	-	-	None
Storage Length	-	-	-	-	-	-	-	-	-	-	-	-
Veh in Median Storage, #	-	0	-	-	0	-	-	0	-	-	0	-
Grade, %	-	0	-	-	0	-	-	0	-	-	0	-
Peak Hour Factor	100	100	100	100	100	100	100	100	100	100	100	100
Heavy Vehicles, %	2	2	2	2	2	2	2	2	2	2	2	2
Mvmt Flow	10	84	7	13	63	6	29	0	15	8	0	18

Major/Minor	Major1			Major2			Minor1			Minor2		
Conflicting Flow All	69	0	0	91	0	0	209	203	88	207	203	66
Stage 1	-	-	-	-	-	-	108	108	-	92	92	-
Stage 2	-	-	-	-	-	-	101	95	-	115	111	-
Critical Hdwy	4.12	-	-	4.12	-	-	7.12	6.52	6.22	7.12	6.52	6.22
Critical Hdwy Stg 1	-	-	-	-	-	-	6.12	5.52	-	6.12	5.52	-
Critical Hdwy Stg 2	-	-	-	-	-	-	6.12	5.52	-	6.12	5.52	-
Follow-up Hdwy	2.218	-	-	2.218	-	-	3.518	4.018	3.318	3.518	4.018	3.318
Pot Cap-1 Maneuver	1532	-	-	1504	-	-	748	693	970	751	693	998
Stage 1	-	-	-	-	-	-	897	806	-	915	819	-
Stage 2	-	-	-	-	-	-	905	816	-	890	804	-
Platoon blocked, %		-	-		-	-						
Mov Cap-1 Maneuver	1532	-	-	1504	-	-	726	682	970	731	682	998
Mov Cap-2 Maneuver	-	-	-	-	-	-	726	682	-	731	682	-
Stage 1	-	-	-	-	-	-	891	800	-	909	812	-
Stage 2	-	-	-	-	-	-	881	809	-	870	798	-

Approach	EB	WB	NB	SB
HCM Control Delay, s	0.7	1.2	9.8	9.1
HCM LOS			A	A

Minor Lane/Major Mvmt	NBLn1	EBL	EBT	EBR	WBL	WBT	WBR	SBLn1
Capacity (veh/h)	794	1532	-	-	1504	-	-	897
HCM Lane V/C Ratio	0.055	0.007	-	-	0.009	-	-	0.029
HCM Control Delay (s)	9.8	7.4	0	-	7.4	0	-	9.1
HCM Lane LOS	A	A	A	-	A	A	-	A
HCM 95th %tile Q(veh)	0.2	0	-	-	0	-	-	0.1

Intersection	
Int Delay, s/veh	3

Movement	EBL	EBT	EBR	WBL	WBT	WBR	NBL	NBT	NBR	SBL	SBT	SBR
Lane Configurations												
Traffic Vol, veh/h	0	0	0	0	0	0	0	0	0	0	0	0
Future Vol, veh/h	61	0	4	13	0	59	7	172	8	18	95	100
Conflicting Peds, #/hr	0	0	0	0	0	0	0	0	0	0	0	0
Sign Control	Stop	Stop	Stop	Stop	Stop	Stop	Free	Free	Free	Free	Free	Free
RT Channelized	-	-	None	-	-	None	-	-	None	-	-	None
Storage Length	-	-	-	-	-	-	150	-	-	150	-	-
Veh in Median Storage, #	-	0	-	-	0	-	-	0	-	-	0	-
Grade, %	-	0	-	-	0	-	-	0	-	-	0	-
Peak Hour Factor	100	100	100	100	100	100	100	100	100	100	100	100
Heavy Vehicles, %	2	2	2	2	2	2	2	2	2	2	2	2
Mvmt Flow	61	0	4	13	0	59	7	172	8	18	95	100

Major/Minor	Minor2			Minor1			Major1			Major2		
Conflicting Flow All	281	375	98	274	421	90	195	0	0	180	0	0
Stage 1	181	181	-	190	190	-	-	-	-	-	-	-
Stage 2	100	194	-	84	231	-	-	-	-	-	-	-
Critical Hdwy	7.54	6.54	6.94	7.54	6.54	6.94	4.14	-	-	4.14	-	-
Critical Hdwy Stg 1	6.54	5.54	-	6.54	5.54	-	-	-	-	-	-	-
Critical Hdwy Stg 2	6.54	5.54	-	6.54	5.54	-	-	-	-	-	-	-
Follow-up Hdwy	3.52	4.02	3.32	3.52	4.02	3.32	2.22	-	-	2.22	-	-
Pot Cap-1 Maneuver	649	555	939	657	522	950	1375	-	-	1393	-	-
Stage 1	803	749	-	794	742	-	-	-	-	-	-	-
Stage 2	895	739	-	915	712	-	-	-	-	-	-	-
Platoon blocked, %								-	-		-	-
Mov Cap-1 Maneuver	599	543	939	644	511	950	1375	-	-	1393	-	-
Mov Cap-2 Maneuver	599	543	-	644	511	-	-	-	-	-	-	-
Stage 1	798	738	-	789	738	-	-	-	-	-	-	-
Stage 2	834	735	-	897	701	-	-	-	-	-	-	-

Approach	EB	WB	NB	SB
HCM Control Delay, s	11.6	9.5	0.3	0.6
HCM LOS	B	A		

Minor Lane/Major Mvmt	NBL	NBT	NBR	EBLn1	WBLn1	SBL	SBT	SBR
Capacity (veh/h)	1375	-	-	613	875	1393	-	-
HCM Lane V/C Ratio	0.005	-	-	0.106	0.082	0.013	-	-
HCM Control Delay (s)	7.6	0	-	11.6	9.5	7.6	0	-
HCM Lane LOS	A	A	-	B	A	A	A	-
HCM 95th %tile Q(veh)	0	-	-	0.4	0.3	0	-	-

Intersection	
Int Delay, s/veh	4.8

Movement	EBL	EBT	EBR	WBL	WBT	WBR	NBL	NBT	NBR	SBL	SBT	SBR
Lane Configurations												
Traffic Vol, veh/h	0	0	0	0	0	0	0	0	0	0	0	0
Future Vol, veh/h	79	0	18	12	0	38	11	70	8	13	76	23
Conflicting Peds, #/hr	0	0	0	0	0	0	0	0	0	0	0	0
Sign Control	Stop	Stop	Stop	Stop	Stop	Stop	Free	Free	Free	Free	Free	Free
RT Channelized	-	-	None	-	-	None	-	-	None	-	-	None
Storage Length	-	-	-	-	-	-	-	-	-	-	-	-
Veh in Median Storage, #	-	0	-	-	0	-	-	0	-	-	0	-
Grade, %	-	0	-	-	0	-	-	0	-	-	0	-
Peak Hour Factor	100	100	100	100	100	100	100	100	100	100	100	100
Heavy Vehicles, %	2	2	2	2	2	2	2	2	2	2	2	2
Mvmt Flow	79	0	18	12	0	38	11	70	8	13	76	23

Major/Minor	Minor2			Minor1			Major1			Major2		
Conflicting Flow All	229	214	50	160	221	74	99	0	0	78	0	0
Stage 1	114	114	-	96	96	-	-	-	-	-	-	-
Stage 2	115	100	-	64	125	-	-	-	-	-	-	-
Critical Hdwy	7.33	6.53	6.93	7.33	6.53	6.23	4.13	-	-	4.13	-	-
Critical Hdwy Stg 1	6.53	5.53	-	6.13	5.53	-	-	-	-	-	-	-
Critical Hdwy Stg 2	6.13	5.53	-	6.53	5.53	-	-	-	-	-	-	-
Follow-up Hdwy	3.519	4.019	3.319	3.519	4.019	3.319	2.219	-	-	2.219	-	-
Pot Cap-1 Maneuver	716	683	1008	798	677	987	1493	-	-	1519	-	-
Stage 1	879	801	-	910	815	-	-	-	-	-	-	-
Stage 2	889	812	-	940	792	-	-	-	-	-	-	-
Platoon blocked, %								-	-		-	-
Mov Cap-1 Maneuver	680	672	1008	774	666	987	1493	-	-	1519	-	-
Mov Cap-2 Maneuver	680	672	-	774	666	-	-	-	-	-	-	-
Stage 1	873	794	-	904	809	-	-	-	-	-	-	-
Stage 2	848	806	-	915	785	-	-	-	-	-	-	-

Approach	EB	WB	NB	SB
HCM Control Delay, s	10.7	9.1	0.9	0.9
HCM LOS	B	A		

Minor Lane/Major Mvmt	NBL	NBT	NBR	EBLn1	WBLn1	SBL	SBT	SBR
Capacity (veh/h)	1493	-	-	724	926	1519	-	-
HCM Lane V/C Ratio	0.007	-	-	0.134	0.054	0.009	-	-
HCM Control Delay (s)	7.4	-	-	10.7	9.1	7.4	0	-
HCM Lane LOS	A	-	-	B	A	A	A	-
HCM 95th %tile Q(veh)	0	-	-	0.5	0.2	0	-	-

Intersection	
Intersection Delay, s/veh	3.3
Intersection LOS	A

Approach	EB	WB	NB	SB
Entry Lanes	1	1	2	2
Conflicting Circle Lanes	1	1	1	1
Adj Approach Flow, veh/h	107	38	133	106
Demand Flow Rate, veh/h	109	38	135	109
Vehicles Circulating, veh/h	86	113	74	61
Vehicles Exiting, veh/h	84	96	121	90
Ped Vol Crossing Leg, #/h	0	0	0	0
Ped Cap Adj	1.000	1.000	1.000	1.000
Approach Delay, s/veh	3.6	3.2	3.2	3.1
Approach LOS	A	A	A	A

Lane	Left	Left	Left	Right	Left	Right
Designated Moves	LTR	LTR	LT	R	LT	R
Assumed Moves	LTR	LTR	LT	R	LT	R
RT Channelized						
Lane Util	1.000	1.000	0.504	0.496	0.633	0.367
Follow-Up Headway, s	2.609	2.609	2.535	2.535	2.535	2.535
Critical Headway, s	4.976	4.976	4.544	4.544	4.544	4.544
Entry Flow, veh/h	109	38	68	67	69	40
Cap Entry Lane, veh/h	1264	1230	1328	1328	1343	1343
Entry HV Adj Factor	0.982	1.000	0.978	0.985	0.974	0.975
Flow Entry, veh/h	107	38	67	66	67	39
Cap Entry, veh/h	1241	1230	1299	1308	1309	1310
V/C Ratio	0.086	0.031	0.051	0.050	0.051	0.030
Control Delay, s/veh	3.6	3.2	3.2	3.2	3.2	3.0
LOS	A	A	A	A	A	A
95th %tile Queue, veh	0	0	0	0	0	0

Intersection	
Int Delay, s/veh	3.6

Movement	EBT	EBR	WBL	WBT	NBL	NBR
Lane Configurations						
Traffic Vol, veh/h	0	0	0	0	0	0
Future Vol, veh/h	84	35	81	103	30	49
Conflicting Peds, #/hr	0	0	0	0	0	0
Sign Control	Free	Free	Free	Free	Stop	Stop
RT Channelized	-	None	-	None	-	None
Storage Length	-	-	150	-	-	150
Veh in Median Storage, #	0	-	-	0	0	-
Grade, %	0	-	-	0	0	-
Peak Hour Factor	100	100	100	100	100	100
Heavy Vehicles, %	2	2	2	2	2	2
Mvmt Flow	84	35	81	103	30	49

Major/Minor	Major1		Major2		Minor1	
Conflicting Flow All	0	0	119	0	316	60
Stage 1	-	-	-	-	102	-
Stage 2	-	-	-	-	214	-
Critical Hdwy	-	-	4.14	-	6.84	6.94
Critical Hdwy Stg 1	-	-	-	-	5.84	-
Critical Hdwy Stg 2	-	-	-	-	5.84	-
Follow-up Hdwy	-	-	2.22	-	3.52	3.32
Pot Cap-1 Maneuver	-	-	1467	-	652	993
Stage 1	-	-	-	-	911	-
Stage 2	-	-	-	-	801	-
Platoon blocked, %	-	-		-		
Mov Cap-1 Maneuver	-	-	1467	-	616	993
Mov Cap-2 Maneuver	-	-	-	-	616	-
Stage 1	-	-	-	-	911	-
Stage 2	-	-	-	-	757	-

Approach	EB	WB	NB
HCM Control Delay, s	0	3.3	9.7
HCM LOS			A

Minor Lane/Major Mvmt	NBLn1	NBLn2	EBT	EBR	WBL	WBT
Capacity (veh/h)	616	993	-	-	1467	-
HCM Lane V/C Ratio	0.049	0.049	-	-	0.055	-
HCM Control Delay (s)	11.1	8.8	-	-	7.6	-
HCM Lane LOS	B	A	-	-	A	-
HCM 95th %tile Q(veh)	0.2	0.2	-	-	0.2	-

Intersection	
Int Delay, s/veh	6.5

Movement	WBL	WBR	NBT	NBR	SBL	SBT
Lane Configurations						
Traffic Vol, veh/h	0	0	0	0	0	0
Future Vol, veh/h	0	61	18	0	101	15
Conflicting Peds, #/hr	0	0	0	0	0	0
Sign Control	Stop	Stop	Free	Free	Free	Free
RT Channelized	-	None	-	None	-	None
Storage Length	-	-	-	-	-	-
Veh in Median Storage, #	0	-	0	-	-	0
Grade, %	0	-	0	-	-	0
Peak Hour Factor	100	100	100	100	100	100
Heavy Vehicles, %	2	2	2	2	2	2
Mvmt Flow	0	61	18	0	101	15

Major/Minor	Minor1		Major1		Major2	
Conflicting Flow All	235	18	0	0	18	0
Stage 1	18	-	-	-	-	-
Stage 2	217	-	-	-	-	-
Critical Hdwy	6.42	6.22	-	-	4.12	-
Critical Hdwy Stg 1	5.42	-	-	-	-	-
Critical Hdwy Stg 2	5.42	-	-	-	-	-
Follow-up Hdwy	3.518	3.318	-	-	2.218	-
Pot Cap-1 Maneuver	753	1061	-	-	1599	-
Stage 1	1005	-	-	-	-	-
Stage 2	819	-	-	-	-	-
Platoon blocked, %			-	-		-
Mov Cap-1 Maneuver	705	1061	-	-	1599	-
Mov Cap-2 Maneuver	705	-	-	-	-	-
Stage 1	1005	-	-	-	-	-
Stage 2	767	-	-	-	-	-

Approach	WB	NB	SB
HCM Control Delay, s	8.6	0	6.4
HCM LOS	A		

Minor Lane/Major Mvmt	NBT	NBR	WBLn1	SBL	SBT
Capacity (veh/h)	-	-	1061	1599	-
HCM Lane V/C Ratio	-	-	0.057	0.063	-
HCM Control Delay (s)	-	-	8.6	7.4	0
HCM Lane LOS	-	-	A	A	A
HCM 95th %tile Q(veh)	-	-	0.2	0.2	-

Intersection	
Int Delay, s/veh	0.5

Movement	EBL	EBR	NBL	NBT	SBT	SBR
Lane Configurations						
Traffic Vol, veh/h	0	0	0	689	766	0
Future Vol, veh/h	0	69	0	747	790	83
Conflicting Peds, #/hr	0	0	0	0	0	0
Sign Control	Stop	Stop	Free	Free	Free	Free
RT Channelized	-	None	-	None	-	None
Storage Length	-	0	-	-	-	-
Veh in Median Storage, #	0	-	-	0	0	-
Grade, %	0	-	-	0	0	-
Peak Hour Factor	100	100	100	100	100	100
Heavy Vehicles, %	2	2	2	2	2	2
Mvmt Flow	0	69	0	747	790	83

Major/Minor	Minor2		Major1		Major2	
Conflicting Flow All	-	437	-	0	-	0
Stage 1	-	-	-	-	-	-
Stage 2	-	-	-	-	-	-
Critical Hdwy	-	6.94	-	-	-	-
Critical Hdwy Stg 1	-	-	-	-	-	-
Critical Hdwy Stg 2	-	-	-	-	-	-
Follow-up Hdwy	-	3.32	-	-	-	-
Pot Cap-1 Maneuver	0	567	0	-	-	-
Stage 1	0	-	0	-	-	-
Stage 2	0	-	0	-	-	-
Platoon blocked, %				-	-	-
Mov Cap-1 Maneuver	-	567	-	-	-	-
Mov Cap-2 Maneuver	-	-	-	-	-	-
Stage 1	-	-	-	-	-	-
Stage 2	-	-	-	-	-	-

Approach	EB	NB	SB
HCM Control Delay, s	12.2	0	0
HCM LOS	B		

Minor Lane/Major Mvmt	NBT	EBLn1	SBT	SBR
Capacity (veh/h)	-	567	-	-
HCM Lane V/C Ratio	-	0.122	-	-
HCM Control Delay (s)	-	12.2	-	-
HCM Lane LOS	-	B	-	-
HCM 95th %tile Q(veh)	-	0.4	-	-

Intersection	
Int Delay, s/veh	1.1

Movement	EBT	EBR	WBL	WBT	NBL	NBR
Lane Configurations						
Traffic Vol, veh/h	0	0	0	0	0	0
Future Vol, veh/h	136	6	8	132	18	13
Conflicting Peds, #/hr	0	0	0	0	0	0
Sign Control	Free	Free	Free	Free	Stop	Stop
RT Channelized	-	None	-	None	-	None
Storage Length	-	-	-	-	0	-
Veh in Median Storage, #	0	-	-	0	0	-
Grade, %	0	-	-	0	0	-
Peak Hour Factor	100	100	100	100	100	100
Heavy Vehicles, %	2	2	2	2	2	2
Mvmt Flow	136	6	8	132	18	13

Major/Minor	Major1		Major2		Minor1	
Conflicting Flow All	0	0	142	0	287	139
Stage 1	-	-	-	-	139	-
Stage 2	-	-	-	-	148	-
Critical Hdwy	-	-	4.12	-	6.42	6.22
Critical Hdwy Stg 1	-	-	-	-	5.42	-
Critical Hdwy Stg 2	-	-	-	-	5.42	-
Follow-up Hdwy	-	-	2.218	-	3.518	3.318
Pot Cap-1 Maneuver	-	-	1441	-	703	909
Stage 1	-	-	-	-	888	-
Stage 2	-	-	-	-	880	-
Platoon blocked, %	-	-		-		
Mov Cap-1 Maneuver	-	-	1441	-	699	909
Mov Cap-2 Maneuver	-	-	-	-	699	-
Stage 1	-	-	-	-	888	-
Stage 2	-	-	-	-	875	-

Approach	EB	WB	NB
HCM Control Delay, s	0	0.4	9.8
HCM LOS			A

Minor Lane/Major Mvmt	NBLn1	EBT	EBR	WBL	WBT
Capacity (veh/h)	774	-	-	1441	-
HCM Lane V/C Ratio	0.04	-	-	0.006	-
HCM Control Delay (s)	9.8	-	-	7.5	0
HCM Lane LOS	A	-	-	A	A
HCM 95th %tile Q(veh)	0.1	-	-	0	-

Intersection	
Int Delay, s/veh	2.3

Movement	EBL	EBR	NBL	NBT	SBT	SBR
Lane Configurations						
Traffic Vol, veh/h	0	0	0	0	0	0
Future Vol, veh/h	67	0	0	41	124	55
Conflicting Peds, #/hr	0	0	0	0	0	0
Sign Control	Stop	Stop	Free	Free	Free	Free
RT Channelized	-	None	-	None	-	None
Storage Length	0	-	0	-	-	-
Veh in Median Storage, #	0	-	-	0	0	-
Grade, %	0	-	-	0	0	-
Peak Hour Factor	100	100	100	100	100	100
Heavy Vehicles, %	2	2	2	2	2	2
Mvmt Flow	67	0	0	41	124	55

Major/Minor	Minor2		Major1		Major2	
Conflicting Flow All	193	152	179	0	-	0
Stage 1	152	-	-	-	-	-
Stage 2	41	-	-	-	-	-
Critical Hdwy	6.42	6.22	4.12	-	-	-
Critical Hdwy Stg 1	5.42	-	-	-	-	-
Critical Hdwy Stg 2	5.42	-	-	-	-	-
Follow-up Hdwy	3.518	3.318	2.218	-	-	-
Pot Cap-1 Maneuver	796	894	1397	-	-	-
Stage 1	876	-	-	-	-	-
Stage 2	981	-	-	-	-	-
Platoon blocked, %				-	-	-
Mov Cap-1 Maneuver	796	894	1397	-	-	-
Mov Cap-2 Maneuver	796	-	-	-	-	-
Stage 1	876	-	-	-	-	-
Stage 2	981	-	-	-	-	-

Approach	EB	NB	SB
HCM Control Delay, s	9.9	0	0
HCM LOS	A		

Minor Lane/Major Mvmt	NBL	NBT	EBLn1	SBT	SBR
Capacity (veh/h)	1397	-	796	-	-
HCM Lane V/C Ratio	-	-	0.084	-	-
HCM Control Delay (s)	0	-	9.9	-	-
HCM Lane LOS	A	-	A	-	-
HCM 95th %tile Q(veh)	0	-	0.3	-	-

Intersection	
Int Delay, s/veh	3.7

Movement	WBL	WBR	NBT	NBR	SBL	SBT
Lane Configurations						
Traffic Vol, veh/h	0	0	0	0	0	0
Future Vol, veh/h	0	67	34	0	55	110
Conflicting Peds, #/hr	0	0	0	0	0	0
Sign Control	Stop	Stop	Free	Free	Free	Free
RT Channelized	-	None	-	None	-	None
Storage Length	0	-	-	-	-	-
Veh in Median Storage, #	0	-	0	-	-	0
Grade, %	0	-	0	-	-	0
Peak Hour Factor	100	100	100	100	100	100
Heavy Vehicles, %	2	2	2	2	2	2
Mvmt Flow	0	67	34	0	55	110

Major/Minor	Minor1		Major1		Major2	
Conflicting Flow All	254	34	0	0	34	0
Stage 1	34	-	-	-	-	-
Stage 2	220	-	-	-	-	-
Critical Hdwy	6.42	6.22	-	-	4.12	-
Critical Hdwy Stg 1	5.42	-	-	-	-	-
Critical Hdwy Stg 2	5.42	-	-	-	-	-
Follow-up Hdwy	3.518	3.318	-	-	2.218	-
Pot Cap-1 Maneuver	735	1039	-	-	1578	-
Stage 1	988	-	-	-	-	-
Stage 2	817	-	-	-	-	-
Platoon blocked, %			-	-		-
Mov Cap-1 Maneuver	708	1039	-	-	1578	-
Mov Cap-2 Maneuver	708	-	-	-	-	-
Stage 1	988	-	-	-	-	-
Stage 2	787	-	-	-	-	-

Approach	WB	NB	SB
HCM Control Delay, s	8.7	0	2.5
HCM LOS	A		

Minor Lane/Major Mvmt	NBT	NBR	WBLn1	SBL	SBT
Capacity (veh/h)	-	-	1039	1578	-
HCM Lane V/C Ratio	-	-	0.064	0.035	-
HCM Control Delay (s)	-	-	8.7	7.4	0
HCM Lane LOS	-	-	A	A	A
HCM 95th %tile Q(veh)	-	-	0.2	0.1	-

Lane Group	EBL	EBT	EBR	WBL	WBT	WBR	NBL	NBT	NBR	SBL	SBT	SBR
Lane Group Flow (vph)	72	363	110	357	971	504	142	509	161	199	483	70
v/c Ratio	0.40	0.32	0.17	0.70	0.82	0.62	0.51	0.40	0.17	0.53	0.35	0.09
Control Delay	60.8	37.1	3.0	54.2	40.4	20.2	58.1	30.2	2.9	53.2	26.7	2.1
Queue Delay	0.0	0.0	0.0	0.0	0.0	0.0	0.0	0.0	0.0	0.0	0.0	0.0
Total Delay	60.8	37.1	3.0	54.2	40.4	20.2	58.1	30.2	2.9	53.2	26.7	2.1
Queue Length 50th (ft)	27	81	0	131	344	222	53	150	0	73	136	0
Queue Length 95th (ft)	53	113	24	186	426	305	89	223	35	111	192	16
Internal Link Dist (ft)		664			834			1448			1908	
Turn Bay Length (ft)	225		235				455		455	385		385
Base Capacity (vph)	183	1377	640	606	1394	947	301	1271	981	675	1376	813
Starvation Cap Reductn	0	0	0	0	0	0	0	0	0	0	0	0
Spillback Cap Reductn	0	0	0	0	0	0	0	0	0	0	0	0
Storage Cap Reductn	0	0	0	0	0	0	0	0	0	0	0	0
Reduced v/c Ratio	0.39	0.26	0.17	0.59	0.70	0.53	0.47	0.40	0.16	0.29	0.35	0.09

Intersection Summary

Movement	EBL	EBT	EBR	WBL	WBT	WBR	NBL	NBT	NBR	SBL	SBT	SBR
Lane Configurations												
Traffic Volume (veh/h)	30	311	41	311	875	464	131	431	127	183	414	36
Future Volume (veh/h)	66	334	101	328	893	464	131	468	148	183	444	64
Initial Q (Qb), veh	0	0	0	0	0	0	0	0	0	0	0	0
Ped-Bike Adj(A_pbT)	1.00		1.00	1.00		1.00	1.00		1.00	1.00		1.00
Parking Bus, Adj	1.00	1.00	1.00	1.00	1.00	1.00	1.00	1.00	1.00	1.00	1.00	1.00
Work Zone On Approach		No			No			No			No	
Adj Sat Flow, veh/h/ln	1870	1870	1870	1870	1870	1870	1870	1870	1870	1870	1870	1870
Adj Flow Rate, veh/h	72	363	0	357	971	0	142	509	0	199	483	0
Peak Hour Factor	0.92	0.92	0.92	0.92	0.92	0.92	0.92	0.92	0.92	0.92	0.92	0.92
Percent Heavy Veh, %	2	2	2	2	2	2	2	2	2	2	2	2
Cap, veh/h	143	1240		436	1165		205	1358		275	1431	
Arrive On Green	0.04	0.24	0.00	0.13	0.33	0.00	0.06	0.38	0.00	0.08	0.40	0.00
Sat Flow, veh/h	3456	5106	1585	3456	3554	1585	3456	3554	1585	3456	3554	1585
Grp Volume(v), veh/h	72	363	0	357	971	0	142	509	0	199	483	0
Grp Sat Flow(s),veh/h/ln	1728	1702	1585	1728	1777	1585	1728	1777	1585	1728	1777	1585
Q Serve(g_s), s	2.2	6.2	0.0	10.7	26.9	0.0	4.3	11.0	0.0	6.0	10.0	0.0
Cycle Q Clear(g_c), s	2.2	6.2	0.0	10.7	26.9	0.0	4.3	11.0	0.0	6.0	10.0	0.0
Prop In Lane	1.00		1.00	1.00		1.00	1.00		1.00	1.00		1.00
Lane Grp Cap(c), veh/h	143	1240		436	1165		205	1358		275	1431	
V/C Ratio(X)	0.50	0.29		0.82	0.83		0.69	0.37		0.72	0.34	
Avail Cap(c_a), veh/h	191	1433		632	1451		315	1358		704	1431	
HCM Platoon Ratio	1.00	1.00	1.00	1.00	1.00	1.00	1.00	1.00	1.00	1.00	1.00	1.00
Upstream Filter(I)	1.00	1.00	0.00	1.00	1.00	0.00	1.00	1.00	0.00	1.00	1.00	0.00
Uniform Delay (d), s/veh	50.0	32.9	0.0	45.4	33.1	0.0	49.2	23.7	0.0	47.9	22.0	0.0
Incr Delay (d2), s/veh	2.7	0.1	0.0	5.5	3.6	0.0	4.2	0.8	0.0	3.6	0.6	0.0
Initial Q Delay(d3),s/veh	0.0	0.0	0.0	0.0	0.0	0.0	0.0	0.0	0.0	0.0	0.0	0.0
%ile BackOfQ(50%),veh/ln	1.0	2.6	0.0	4.9	11.9	0.0	2.0	4.7	0.0	2.7	4.3	0.0
Unsig. Movement Delay, s/veh												
LnGrp Delay(d),s/veh	52.7	33.0	0.0	50.9	36.7	0.0	53.3	24.5	0.0	51.5	22.7	0.0
LnGrp LOS	D	C		D	D		D	C		D	C	
Approach Vol, veh/h		435	A		1328	A		651	A		682	A
Approach Delay, s/veh		36.3			40.5			30.8			31.1	
Approach LOS		D			D			C			C	

Timer - Assigned Phs	1	2	3	4	5	6	7	8
Phs Duration (G+Y+Rc), s	13.0	45.2	18.0	30.4	10.8	47.4	8.9	39.4
Change Period (Y+Rc), s	4.5	4.5	4.5	4.5	4.5	4.5	4.5	4.5
Max Green Setting (Gmax), s	21.7	30.9	19.5	29.9	9.7	42.9	5.9	43.5
Max Q Clear Time (g_c+I1), s	8.0	13.0	12.7	8.2	6.3	12.0	4.2	28.9
Green Ext Time (p_c), s	0.5	3.2	0.7	2.4	0.1	3.5	0.0	6.0

Intersection Summary	
HCM 6th Ctrl Delay	35.8
HCM 6th LOS	D

Notes

Unsignalized Delay for [NBR, EBR, WBR, SBR] is excluded from calculations of the approach delay and intersection delay.

Lane Group	EBL	EBT	EBR	WBL	WBT	WBR	NBL	NBT	SBL	SBT
Lane Group Flow (vph)	125	453	16	3	900	47	49	13	89	355
v/c Ratio	0.54	0.27	0.02	0.01	0.54	0.06	0.20	0.03	0.21	0.63
Control Delay	20.0	8.1	3.7	7.7	10.1	3.1	16.7	9.2	15.4	16.0
Queue Delay	0.0	0.0	0.0	0.0	0.0	0.0	0.0	0.0	0.0	0.0
Total Delay	20.0	8.1	3.7	7.7	10.1	3.1	16.7	9.2	15.4	16.0
Queue Length 50th (ft)	18	28	0	0	67	0	8	0	14	43
Queue Length 95th (ft)	88	84	7	4	181	14	42	12	63	175
Internal Link Dist (ft)		2031			726			424		524
Turn Bay Length (ft)	485		275	235		275	235		235	
Base Capacity (vph)	426	3093	1386	800	3093	1389	552	1130	967	1134
Starvation Cap Reductn	0	0	0	0	0	0	0	0	0	0
Spillback Cap Reductn	0	0	0	0	0	0	0	0	0	0
Storage Cap Reductn	0	0	0	0	0	0	0	0	0	0
Reduced v/c Ratio	0.29	0.15	0.01	0.00	0.29	0.03	0.09	0.01	0.09	0.31

Intersection Summary

Movement	EBL	EBT	EBR	WBL	WBT	WBR	NBL	NBT	NBR	SBL	SBT	SBR
Lane Configurations												
Traffic Volume (veh/h)	92	292	15	3	726	32	45	2	10	61	2	236
Future Volume (veh/h)	115	417	15	3	828	43	45	2	10	82	2	325
Initial Q (Qb), veh	0	0	0	0	0	0	0	0	0	0	0	0
Ped-Bike Adj(A_pbT)	1.00		1.00	1.00		1.00	1.00		1.00	1.00		1.00
Parking Bus, Adj	1.00	1.00	1.00	1.00	1.00	1.00	1.00	1.00	1.00	1.00	1.00	1.00
Work Zone On Approach		No			No			No			No	
Adj Sat Flow, veh/h/ln	1870	1870	1870	1870	1870	1870	1870	1870	1870	1870	1870	1870
Adj Flow Rate, veh/h	125	453	16	3	900	47	49	2	11	89	2	353
Peak Hour Factor	0.92	0.92	0.92	0.92	0.92	0.92	0.92	0.92	0.92	0.92	0.92	0.92
Percent Heavy Veh, %	2	2	2	2	2	2	2	2	2	2	2	2
Cap, veh/h	355	1770	789	553	1770	789	263	75	414	575	3	475
Arrive On Green	0.50	0.50	0.50	0.50	0.50	0.50	0.30	0.30	0.30	0.30	0.30	0.30
Sat Flow, veh/h	592	3554	1585	924	3554	1585	1026	250	1373	1401	9	1577
Grp Volume(v), veh/h	125	453	16	3	900	47	49	0	13	89	0	355
Grp Sat Flow(s),veh/h/ln	592	1777	1585	924	1777	1585	1026	0	1623	1401	0	1586
Q Serve(g_s), s	8.1	3.3	0.2	0.1	7.6	0.7	2.0	0.0	0.3	2.1	0.0	9.0
Cycle Q Clear(g_c), s	15.7	3.3	0.2	3.4	7.6	0.7	11.1	0.0	0.3	2.4	0.0	9.0
Prop In Lane	1.00		1.00	1.00		1.00	1.00		0.85	1.00		0.99
Lane Grp Cap(c), veh/h	355	1770	789	553	1770	789	263	0	489	575	0	478
V/C Ratio(X)	0.35	0.26	0.02	0.01	0.51	0.06	0.19	0.00	0.03	0.15	0.00	0.74
Avail Cap(c_a), veh/h	621	3369	1503	969	3369	1503	606	0	1032	1043	0	1009
HCM Platoon Ratio	1.00	1.00	1.00	1.00	1.00	1.00	1.00	1.00	1.00	1.00	1.00	1.00
Upstream Filter(I)	1.00	1.00	1.00	1.00	1.00	1.00	1.00	0.00	1.00	1.00	0.00	1.00
Uniform Delay (d), s/veh	12.8	6.5	5.7	7.4	7.6	5.8	19.1	0.0	11.0	11.9	0.0	14.1
Incr Delay (d2), s/veh	0.6	0.1	0.0	0.0	0.2	0.0	0.3	0.0	0.0	0.1	0.0	2.3
Initial Q Delay(d3),s/veh	0.0	0.0	0.0	0.0	0.0	0.0	0.0	0.0	0.0	0.0	0.0	0.0
%ile BackOfQ(50%),veh/ln	0.9	0.9	0.1	0.0	2.1	0.2	0.5	0.0	0.1	0.6	0.0	3.0
Unsig. Movement Delay, s/veh												
LnGrp Delay(d),s/veh	13.4	6.5	5.7	7.4	7.8	5.9	19.4	0.0	11.1	12.0	0.0	16.4
LnGrp LOS	B	A	A	A	A	A	B	A	B	B	A	B
Approach Vol, veh/h		594			950			62			444	
Approach Delay, s/veh		8.0			7.7			17.7			15.5	
Approach LOS		A			A			B			B	

Timer - Assigned Phs		2		4		6		8				
Phs Duration (G+Y+Rc), s		18.0		26.8		18.0		26.8				
Change Period (Y+Rc), s		4.5		4.5		4.5		4.5				
Max Green Setting (Gmax), s		28.5		42.5		28.5		42.5				
Max Q Clear Time (g_c+I1), s		13.1		17.7		11.0		9.6				
Green Ext Time (p_c), s		0.2		4.6		2.5		7.8				

Intersection Summary												
HCM 6th Ctrl Delay			9.8									
HCM 6th LOS			A									

Lane Group	EBL	EBT	EBR	WBL	WBT	WBR	NBL	NBT	NBR	SBL	SBT	SBR
Lane Group Flow (vph)	168	302	95	310	227	191	52	533	425	222	658	239
v/c Ratio	0.49	0.53	0.24	0.79	0.31	0.40	0.14	0.48	0.54	0.48	0.42	0.29
Control Delay	23.3	32.4	2.3	35.5	26.1	6.8	11.5	23.0	5.4	14.1	16.8	3.5
Queue Delay	0.0	0.0	0.0	0.0	0.0	0.0	0.0	0.0	0.0	0.0	0.0	0.0
Total Delay	23.3	32.4	2.3	35.5	26.1	6.8	11.5	23.0	5.4	14.1	16.8	3.5
Queue Length 50th (ft)	55	70	0	112	48	0	11	102	0	53	116	0
Queue Length 95th (ft)	99	107	8	#176	77	49	30	164	64	102	177	43
Internal Link Dist (ft)		911			760			1157			1874	
Turn Bay Length (ft)	235		450	200		400	700		600			490
Base Capacity (vph)	345	1718	852	395	1894	936	363	1117	790	499	1558	830
Starvation Cap Reductn	0	0	0	0	0	0	0	0	0	0	0	0
Spillback Cap Reductn	0	0	0	0	0	0	0	0	0	0	0	0
Storage Cap Reductn	0	0	0	0	0	0	0	0	0	0	0	0
Reduced v/c Ratio	0.49	0.18	0.11	0.78	0.12	0.20	0.14	0.48	0.54	0.44	0.42	0.29

Intersection Summary

95th percentile volume exceeds capacity, queue may be longer.
Queue shown is maximum after two cycles.

Movement	EBL	EBT	EBR	WBL	WBT	WBR	NBL	NBT	NBR	SBL	SBT	SBR
Lane Configurations												
Traffic Volume (veh/h)	155	227	87	116	170	57	48	490	124	54	605	220
Future Volume (veh/h)	155	278	87	285	209	176	48	490	391	204	605	220
Initial Q (Qb), veh	0	0	0	0	0	0	0	0	0	0	0	0
Ped-Bike Adj(A_pbT)	1.00		1.00	1.00		1.00	1.00		1.00	1.00		1.00
Parking Bus, Adj	1.00	1.00	1.00	1.00	1.00	1.00	1.00	1.00	1.00	1.00	1.00	1.00
Work Zone On Approach		No			No			No			No	
Adj Sat Flow, veh/h/ln	1870	1870	1870	1870	1870	1870	1870	1870	1870	1870	1870	1870
Adj Flow Rate, veh/h	168	302	0	310	227	0	52	533	0	222	658	0
Peak Hour Factor	0.92	0.92	0.92	0.92	0.92	0.92	0.92	0.92	0.92	0.92	0.92	0.92
Percent Heavy Veh, %	2	2	2	2	2	2	2	2	2	2	2	2
Cap, veh/h	422	485		422	668		405	1289		503	1497	
Arrive On Green	0.09	0.14	0.00	0.15	0.19	0.00	0.04	0.36	0.00	0.10	0.42	0.00
Sat Flow, veh/h	1781	3554	1585	1781	3554	1585	1781	3554	1585	1781	3554	1585
Grp Volume(v), veh/h	168	302	0	310	227	0	52	533	0	222	658	0
Grp Sat Flow(s),veh/h/ln	1781	1777	1585	1781	1777	1585	1781	1777	1585	1781	1777	1585
Q Serve(g_s), s	5.7	5.8	0.0	10.5	4.0	0.0	1.3	8.1	0.0	5.2	9.4	0.0
Cycle Q Clear(g_c), s	5.7	5.8	0.0	10.5	4.0	0.0	1.3	8.1	0.0	5.2	9.4	0.0
Prop In Lane	1.00		1.00	1.00		1.00	1.00		1.00	1.00		1.00
Lane Grp Cap(c), veh/h	422	485		422	668		405	1289		503	1497	
V/C Ratio(X)	0.40	0.62		0.73	0.34		0.13	0.41		0.44	0.44	
Avail Cap(c_a), veh/h	422	1784		422	1967		457	1289		629	1497	
HCM Platoon Ratio	1.00	1.00	1.00	1.00	1.00	1.00	1.00	1.00	1.00	1.00	1.00	1.00
Upstream Filter(I)	1.00	1.00	0.00	1.00	1.00	0.00	1.00	1.00	0.00	1.00	1.00	0.00
Uniform Delay (d), s/veh	23.4	29.2	0.0	21.8	25.3	0.0	13.2	17.1	0.0	11.6	14.7	0.0
Incr Delay (d2), s/veh	0.6	1.3	0.0	6.6	0.3	0.0	0.1	1.0	0.0	0.6	0.9	0.0
Initial Q Delay(d3),s/veh	0.0	0.0	0.0	0.0	0.0	0.0	0.0	0.0	0.0	0.0	0.0	0.0
%ile BackOfQ(50%),veh/ln	2.4	2.5	0.0	4.9	1.6	0.0	0.5	3.2	0.0	1.9	3.7	0.0
Unsig. Movement Delay, s/veh												
LnGrp Delay(d),s/veh	24.0	30.5	0.0	28.4	25.6	0.0	13.3	18.1	0.0	12.2	15.7	0.0
LnGrp LOS	C	C		C	C		B	B		B	B	
Approach Vol, veh/h		470	A		537	A		585	A		880	A
Approach Delay, s/veh		28.2			27.2			17.7			14.8	
Approach LOS		C			C			B			B	

Timer - Assigned Phs	1	2	3	4	5	6	7	8
Phs Duration (G+Y+Rc), s	11.9	30.5	15.0	14.3	7.7	34.7	11.3	18.0
Change Period (Y+Rc), s	4.5	4.5	4.5	4.5	4.5	4.5	4.5	4.5
Max Green Setting (Gmax), s	12.5	23.0	10.5	36.0	5.3	30.2	6.8	39.7
Max Q Clear Time (g_c+I1), s	7.2	10.1	12.5	7.8	3.3	11.4	7.7	6.0
Green Ext Time (p_c), s	0.3	2.9	0.0	2.0	0.0	4.4	0.0	1.5

Intersection Summary	
HCM 6th Ctrl Delay	20.7
HCM 6th LOS	C

Notes

Unsignalized Delay for [NBR, EBR, WBR, SBR] is excluded from calculations of the approach delay and intersection delay.

Intersection	
Int Delay, s/veh	0.3

Movement	EBT	EBR	WBL	WBT	NBL	NBR
Lane Configurations						
Traffic Vol, veh/h	377	11	4	270	9	5
Future Vol, veh/h	845	11	4	597	9	5
Conflicting Peds, #/hr	0	0	0	0	0	0
Sign Control	Free	Free	Free	Free	Stop	Stop
RT Channelized	-	None	-	None	-	None
Storage Length	-	235	235	-	0	-
Veh in Median Storage, #	0	-	-	0	0	-
Grade, %	0	-	-	0	0	-
Peak Hour Factor	92	92	92	92	92	92
Heavy Vehicles, %	2	2	2	2	2	2
Mvmt Flow	918	12	4	649	10	5

Major/Minor	Major1		Major2		Minor1	
Conflicting Flow All	0	0	930	0	1251	459
Stage 1	-	-	-	-	918	-
Stage 2	-	-	-	-	333	-
Critical Hdwy	-	-	4.14	-	6.84	6.94
Critical Hdwy Stg 1	-	-	-	-	5.84	-
Critical Hdwy Stg 2	-	-	-	-	5.84	-
Follow-up Hdwy	-	-	2.22	-	3.52	3.32
Pot Cap-1 Maneuver	-	-	731	-	165	549
Stage 1	-	-	-	-	349	-
Stage 2	-	-	-	-	698	-
Platoon blocked, %	-	-		-		
Mov Cap-1 Maneuver	-	-	731	-	164	549
Mov Cap-2 Maneuver	-	-	-	-	164	-
Stage 1	-	-	-	-	349	-
Stage 2	-	-	-	-	695	-

Approach	EB	WB	NB
HCM Control Delay, s	0	0.1	22.7
HCM LOS			C

Minor Lane/Major Mvmt	NBLn1	EBT	EBR	WBL	WBT
Capacity (veh/h)	219	-	-	731	-
HCM Lane V/C Ratio	0.069	-	-	0.006	-
HCM Control Delay (s)	22.7	-	-	10	-
HCM Lane LOS	C	-	-	A	-
HCM 95th %tile Q(veh)	0.2	-	-	0	-

Lane Group	EBL	EBT	EBR	WBL	WBT	WBR	NBL	NBT	NBR	SBL	SBT	SBR
Lane Group Flow (vph)	91	1145	209	292	698	387	109	241	449	633	325	101
v/c Ratio	0.49	0.97	0.33	0.88	0.52	0.46	0.51	0.29	0.91	0.94	0.25	0.15
Control Delay	68.6	61.8	9.6	85.3	33.3	4.5	67.4	42.0	53.4	75.2	29.4	2.9
Queue Delay	0.0	0.0	0.0	0.0	0.0	0.0	0.0	0.0	0.0	0.0	0.0	0.0
Total Delay	68.6	61.8	9.6	85.3	33.3	4.5	67.4	42.0	53.4	75.2	29.4	2.9
Queue Length 50th (ft)	39	498	26	127	238	0	46	88	249	273	100	0
Queue Length 95th (ft)	68	#646	86	#208	300	64	78	127	#450	#387	137	24
Internal Link Dist (ft)		664			834			1448			1908	
Turn Bay Length (ft)	225		100				455		455	385		385
Base Capacity (vph)	192	1185	639	330	1331	837	224	831	496	674	1300	661
Starvation Cap Reductn	0	0	0	0	0	0	0	0	0	0	0	0
Spillback Cap Reductn	0	0	0	0	0	0	0	0	0	0	0	0
Storage Cap Reductn	0	0	0	0	0	0	0	0	0	0	0	0
Reduced v/c Ratio	0.47	0.97	0.33	0.88	0.52	0.46	0.49	0.29	0.91	0.94	0.25	0.15

Intersection Summary

95th percentile volume exceeds capacity, queue may be longer.
Queue shown is maximum after two cycles.

Movement	EBL	EBT	EBR	WBL	WBT	WBR	NBL	NBT	NBR	SBL	SBT	SBR
Lane Configurations												
Traffic Volume (veh/h)	56	1035	121	245	615	356	100	186	390	582	257	52
Future Volume (veh/h)	84	1053	192	269	642	356	100	222	413	582	299	93
Initial Q (Qb), veh	0	0	0	0	0	0	0	0	0	0	0	0
Ped-Bike Adj(A_pbT)	1.00		1.00	1.00		1.00	1.00		1.00	1.00		1.00
Parking Bus, Adj	1.00	1.00	1.00	1.00	1.00	1.00	1.00	1.00	1.00	1.00	1.00	1.00
Work Zone On Approach		No			No			No			No	
Adj Sat Flow, veh/h/ln	1870	1870	1870	1870	1870	1870	1870	1870	1870	1870	1870	1870
Adj Flow Rate, veh/h	91	1145	0	292	698	0	109	241	0	633	325	0
Peak Hour Factor	0.92	0.92	0.92	0.92	0.92	0.92	0.92	0.92	0.92	0.92	0.92	0.92
Percent Heavy Veh, %	2	2	2	2	2	2	2	2	2	2	2	2
Cap, veh/h	139	1188		333	1387		159	835		677	1368	
Arrive On Green	0.04	0.33	0.00	0.10	0.39	0.00	0.05	0.23	0.00	0.20	0.38	0.00
Sat Flow, veh/h	3456	3554	1585	3456	3554	1585	3456	3554	1585	3456	3554	1585
Grp Volume(v), veh/h	91	1145	0	292	698	0	109	241	0	633	325	0
Grp Sat Flow(s),veh/h/ln	1728	1777	1585	1728	1777	1585	1728	1777	1585	1728	1777	1585
Q Serve(g_s), s	3.4	41.1	0.0	10.8	19.3	0.0	4.0	7.2	0.0	23.4	8.0	0.0
Cycle Q Clear(g_c), s	3.4	41.1	0.0	10.8	19.3	0.0	4.0	7.2	0.0	23.4	8.0	0.0
Prop In Lane	1.00		1.00	1.00		1.00	1.00		1.00	1.00		1.00
Lane Grp Cap(c), veh/h	139	1188		333	1387		159	835		677	1368	
V/C Ratio(X)	0.66	0.96		0.88	0.50		0.69	0.29		0.93	0.24	
Avail Cap(c_a), veh/h	194	1191		333	1387		226	835		679	1368	
HCM Platoon Ratio	1.00	1.00	1.00	1.00	1.00	1.00	1.00	1.00	1.00	1.00	1.00	1.00
Upstream Filter(I)	1.00	1.00	0.00	1.00	1.00	0.00	1.00	1.00	0.00	1.00	1.00	0.00
Uniform Delay (d), s/veh	61.4	42.5	0.0	57.9	30.0	0.0	61.0	40.8	0.0	51.4	27.0	0.0
Incr Delay (d2), s/veh	5.2	18.1	0.0	22.3	0.3	0.0	5.1	0.9	0.0	20.2	0.4	0.0
Initial Q Delay(d3),s/veh	0.0	0.0	0.0	0.0	0.0	0.0	0.0	0.0	0.0	0.0	0.0	0.0
%ile BackOfQ(50%),veh/ln	1.6	20.8	0.0	5.8	8.4	0.0	1.9	3.3	0.0	12.0	3.5	0.0
Unsig. Movement Delay, s/veh												
LnGrp Delay(d),s/veh	66.6	60.5	0.0	80.2	30.3	0.0	66.1	41.6	0.0	71.6	27.4	0.0
LnGrp LOS	E	E		F	C		E	D		E	C	
Approach Vol, veh/h		1236	A		990	A		350	A		958	A
Approach Delay, s/veh		61.0			45.0			49.3			56.6	
Approach LOS		E			D			D			E	

Timer - Assigned Phs	1	2	3	4	5	6	7	8
Phs Duration (G+Y+Rc), s	29.9	35.0	17.0	47.9	10.5	54.5	9.7	55.2
Change Period (Y+Rc), s	4.5	4.5	4.5	4.5	4.5	4.5	4.5	4.5
Max Green Setting (Gmax), s	25.5	30.5	12.5	43.5	8.5	47.5	7.3	48.7
Max Q Clear Time (g_c+I1), s	25.4	9.2	12.8	43.1	6.0	10.0	5.4	21.3
Green Ext Time (p_c), s	0.0	1.4	0.0	0.3	0.1	2.3	0.0	5.3

Intersection Summary	
HCM 6th Ctrl Delay	54.2
HCM 6th LOS	D

Notes

Unsignalized Delay for [NBR, EBR, WBR, SBR] is excluded from calculations of the approach delay and intersection delay.

Lane Group	EBL	EBT	WBL	WBT	NBL	NBT	NBR	SBL	SBT	SBR
Lane Group Flow (vph)	59	48	225	104	148	591	363	98	670	38
v/c Ratio	0.15	0.09	0.56	0.19	0.44	0.35	0.38	0.26	0.40	0.05
Control Delay	11.7	6.3	18.0	5.3	13.7	8.2	2.6	10.0	8.5	3.4
Queue Delay	0.0	0.0	0.0	0.0	0.0	0.0	0.0	0.0	0.0	0.0
Total Delay	11.7	6.3	18.0	5.3	13.7	8.2	2.6	10.0	8.5	3.4
Queue Length 50th (ft)	9	2	39	3	20	39	0	12	46	0
Queue Length 95th (ft)	30	18	98	27	74	90	36	45	103	12
Internal Link Dist (ft)		818		800		2717			1066	
Turn Bay Length (ft)			250		250		250	400		200
Base Capacity (vph)	888	1161	934	1157	404	2008	1055	453	2008	914
Starvation Cap Reductn	0	0	0	0	0	0	0	0	0	0
Spillback Cap Reductn	0	0	0	0	0	0	0	0	0	0
Storage Cap Reductn	0	0	0	0	0	0	0	0	0	0
Reduced v/c Ratio	0.07	0.04	0.24	0.09	0.37	0.29	0.34	0.22	0.33	0.04

Intersection Summary

Movement	EBL	EBT	EBR	WBL	WBT	WBR	NBL	NBT	NBR	SBL	SBT	SBR
Lane Configurations												
Traffic Volume (veh/h)	0	0	0	225	0	84	0	591	363	98	526	0
Future Volume (veh/h)	59	14	34	225	20	84	148	591	363	98	670	38
Initial Q (Qb), veh	0	0	0	0	0	0	0	0	0	0	0	0
Ped-Bike Adj(A_pbT)	1.00		1.00	1.00		1.00	1.00		1.00	1.00		1.00
Parking Bus, Adj	1.00	1.00	1.00	1.00	1.00	1.00	1.00	1.00	1.00	1.00	1.00	1.00
Work Zone On Approach		No			No			No			No	
Adj Sat Flow, veh/h/ln	1870	1870	1870	1870	1870	1870	1870	1870	1870	1870	1870	1870
Adj Flow Rate, veh/h	59	14	34	225	20	84	148	591	363	98	670	38
Peak Hour Factor	1.00	1.00	1.00	1.00	1.00	1.00	1.00	1.00	1.00	1.00	1.00	1.00
Percent Heavy Veh, %	2	2	2	2	2	2	2	2	2	2	2	2
Cap, veh/h	486	127	309	539	83	347	471	1680	749	427	1680	749
Arrive On Green	0.26	0.26	0.26	0.26	0.26	0.26	0.47	0.47	0.47	0.47	0.47	0.47
Sat Flow, veh/h	1290	484	1175	1357	314	1319	741	3554	1585	588	3554	1585
Grp Volume(v), veh/h	59	0	48	225	0	104	148	591	363	98	670	38
Grp Sat Flow(s),veh/h/ln	1290	0	1659	1357	0	1633	741	1777	1585	588	1777	1585
Q Serve(g_s), s	1.3	0.0	0.7	5.1	0.0	1.7	5.5	3.6	5.3	4.3	4.2	0.4
Cycle Q Clear(g_c), s	3.0	0.0	0.7	5.9	0.0	1.7	9.7	3.6	5.3	7.9	4.2	0.4
Prop In Lane	1.00		0.71	1.00		0.81	1.00		1.00	1.00		1.00
Lane Grp Cap(c), veh/h	486	0	437	539	0	430	471	1680	749	427	1680	749
V/C Ratio(X)	0.12	0.00	0.11	0.42	0.00	0.24	0.31	0.35	0.48	0.23	0.40	0.05
Avail Cap(c_a), veh/h	1205	0	1361	1295	0	1340	620	2396	1069	546	2396	1069
HCM Platoon Ratio	1.00	1.00	1.00	1.00	1.00	1.00	1.00	1.00	1.00	1.00	1.00	1.00
Upstream Filter(I)	1.00	0.00	1.00	1.00	0.00	1.00	1.00	1.00	1.00	1.00	1.00	1.00
Uniform Delay (d), s/veh	11.1	0.0	9.5	11.8	0.0	9.9	9.0	5.7	6.1	8.2	5.8	4.9
Incr Delay (d2), s/veh	0.1	0.0	0.1	0.5	0.0	0.3	0.4	0.1	0.5	0.3	0.2	0.0
Initial Q Delay(d3),s/veh	0.0	0.0	0.0	0.0	0.0	0.0	0.0	0.0	0.0	0.0	0.0	0.0
%ile BackOfQ(50%),veh/ln	0.3	0.0	0.2	1.2	0.0	0.5	0.4	0.4	0.6	0.3	0.4	0.0
Unsig. Movement Delay, s/veh												
LnGrp Delay(d),s/veh	11.2	0.0	9.6	12.3	0.0	10.2	9.4	5.8	6.6	8.5	6.0	4.9
LnGrp LOS	B	A	A	B	A	B	A	A	A	A	A	A
Approach Vol, veh/h		107			329			1102			806	
Approach Delay, s/veh		10.5			11.6			6.6			6.2	
Approach LOS		B			B			A			A	

Timer - Assigned Phs	2	4	6	8
Phs Duration (G+Y+Rc), s	20.6	13.5	20.6	13.5
Change Period (Y+Rc), s	4.5	4.5	4.5	4.5
Max Green Setting (Gmax), s	23.0	28.0	23.0	28.0
Max Q Clear Time (g_c+I1), s	11.7	5.0	9.9	7.9
Green Ext Time (p_c), s	4.4	0.4	4.1	1.2

Intersection Summary	
HCM 6th Ctrl Delay	7.3
HCM 6th LOS	A

Lane Group	EBL	EBT	EBR	WBL	WBT	WBR	NBL	NBT	NBR	SBL	SBT	SBR
Lane Group Flow (vph)	547	304	129	65	262	87	92	211	43	87	288	416
v/c Ratio	0.59	0.15	0.14	0.31	0.37	0.23	0.34	0.24	0.10	0.30	0.32	0.59
Control Delay	20.1	6.0	1.9	23.9	20.6	7.3	20.6	16.5	2.7	19.5	17.1	6.1
Queue Delay	0.0	0.0	0.0	0.0	0.0	0.0	0.0	0.0	0.0	0.0	0.0	0.0
Total Delay	20.1	6.0	1.9	23.9	20.6	7.3	20.6	16.5	2.7	19.5	17.1	6.1
Queue Length 50th (ft)	68	18	0	16	34	0	21	24	0	20	34	0
Queue Length 95th (ft)	148	46	20	54	77	31	63	56	11	59	74	57
Internal Link Dist (ft)		726			925			690			2070	
Turn Bay Length (ft)	300		275	300		275	300		275	300		500
Base Capacity (vph)	1235	3288	1480	607	2037	948	683	2256	1035	736	2256	1159
Starvation Cap Reductn	0	0	0	0	0	0	0	0	0	0	0	0
Spillback Cap Reductn	0	0	0	0	0	0	0	0	0	0	0	0
Storage Cap Reductn	0	0	0	0	0	0	0	0	0	0	0	0
Reduced v/c Ratio	0.44	0.09	0.09	0.11	0.13	0.09	0.13	0.09	0.04	0.12	0.13	0.36

Intersection Summary

Movement	EBL	EBT	EBR	WBL	WBT	WBR	NBL	NBT	NBR	SBL	SBT	SBR
Lane Configurations												
Traffic Volume (veh/h)	386	280	103	60	241	80	65	163	40	80	241	229
Future Volume (veh/h)	503	280	119	60	241	80	85	194	40	80	265	383
Initial Q (Qb), veh	0	0	0	0	0	0	0	0	0	0	0	0
Ped-Bike Adj(A_pbT)	1.00		1.00	1.00		1.00	1.00		1.00	1.00		1.00
Parking Bus, Adj	1.00	1.00	1.00	1.00	1.00	1.00	1.00	1.00	1.00	1.00	1.00	1.00
Work Zone On Approach		No			No			No			No	
Adj Sat Flow, veh/h/ln	1870	1870	1870	1870	1870	1870	1870	1870	1870	1870	1870	1870
Adj Flow Rate, veh/h	547	304	129	65	262	87	92	211	43	87	288	416
Peak Hour Factor	0.92	0.92	0.92	0.92	0.92	0.92	0.92	0.92	0.92	0.92	0.92	0.92
Percent Heavy Veh, %	2	2	2	2	2	2	2	2	2	2	2	2
Cap, veh/h	751	1657	739	298	554	247	365	1236	551	494	1236	551
Arrive On Green	0.22	0.47	0.47	0.16	0.16	0.16	0.35	0.35	0.35	0.35	0.35	0.35
Sat Flow, veh/h	3456	3554	1585	955	3554	1585	743	3554	1585	1126	3554	1585
Grp Volume(v), veh/h	547	304	129	65	262	87	92	211	43	87	288	416
Grp Sat Flow(s),veh/h/ln	1728	1777	1585	955	1777	1585	743	1777	1585	1126	1777	1585
Q Serve(g_s), s	7.1	2.4	2.3	3.0	3.3	2.4	4.9	2.0	0.9	2.8	2.8	11.2
Cycle Q Clear(g_c), s	7.1	2.4	2.3	3.0	3.3	2.4	7.6	2.0	0.9	4.8	2.8	11.2
Prop In Lane	1.00		1.00	1.00		1.00	1.00		1.00	1.00		1.00
Lane Grp Cap(c), veh/h	751	1657	739	298	554	247	365	1236	551	494	1236	551
V/C Ratio(X)	0.73	0.18	0.17	0.22	0.47	0.35	0.25	0.17	0.08	0.18	0.23	0.75
Avail Cap(c_a), veh/h	1250	3671	1638	701	2056	917	582	2276	1015	823	2276	1015
HCM Platoon Ratio	1.00	1.00	1.00	1.00	1.00	1.00	1.00	1.00	1.00	1.00	1.00	1.00
Upstream Filter(I)	1.00	1.00	1.00	1.00	1.00	1.00	1.00	1.00	1.00	1.00	1.00	1.00
Uniform Delay (d), s/veh	17.6	7.5	7.5	18.5	18.6	18.2	13.9	10.9	10.6	12.6	11.2	14.0
Incr Delay (d2), s/veh	1.4	0.1	0.1	0.4	0.6	0.9	0.4	0.1	0.1	0.2	0.1	2.1
Initial Q Delay(d3),s/veh	0.0	0.0	0.0	0.0	0.0	0.0	0.0	0.0	0.0	0.0	0.0	0.0
%ile BackOfQ(50%),veh/ln	2.6	0.7	0.6	0.6	1.2	0.8	0.7	0.7	0.3	0.6	0.9	3.6
Unsig. Movement Delay, s/veh												
LnGrp Delay(d),s/veh	19.0	7.6	7.6	18.9	19.2	19.1	14.3	11.0	10.6	12.8	11.3	16.1
LnGrp LOS	B	A	A	B	B	B	B	B	B	B	B	B
Approach Vol, veh/h		980			414			346			791	
Approach Delay, s/veh		14.0			19.2			11.8			14.0	
Approach LOS		B			B			B			B	

Timer - Assigned Phs	2	4	6	7	8
Phs Duration (G+Y+Rc), s	21.3	27.1	21.3	15.0	12.0
Change Period (Y+Rc), s	4.5	4.5	4.5	4.5	4.5
Max Green Setting (Gmax), s	31.0	50.0	31.0	17.5	28.0
Max Q Clear Time (g_c+I1), s	9.6	4.4	13.2	9.1	5.3
Green Ext Time (p_c), s	2.1	2.6	3.6	1.4	2.3

Intersection Summary	
HCM 6th Ctrl Delay	14.5
HCM 6th LOS	B

Lane Group	EBL	EBT	EBR	WBL	WBT	WBR	NBT	NBR	SBT	SBR
Lane Group Flow (vph)	393	870	54	11	615	143	36	7	108	292
v/c Ratio	0.73	0.36	0.05	0.03	0.25	0.13	0.16	0.02	0.49	0.59
Control Delay	17.7	4.9	1.5	4.2	4.4	1.2	27.4	5.5	35.1	9.9
Queue Delay	0.0	0.0	0.0	0.0	0.0	0.0	0.0	0.0	0.0	0.0
Total Delay	17.7	4.9	1.5	4.2	4.4	1.2	27.4	5.5	35.1	9.9
Queue Length 50th (ft)	77	59	0	1	38	0	14	0	45	6
Queue Length 95th (ft)	#303	114	10	7	76	16	39	5	92	68
Internal Link Dist (ft)		2031			726		424		524	
Turn Bay Length (ft)	485		275	235		275				235
Base Capacity (vph)	612	2781	1255	452	2781	1274	596	713	586	857
Starvation Cap Reductn	0	0	0	0	0	0	0	0	0	0
Spillback Cap Reductn	0	0	0	0	0	0	0	0	0	0
Storage Cap Reductn	0	0	0	0	0	0	0	0	0	0
Reduced v/c Ratio	0.64	0.31	0.04	0.02	0.22	0.11	0.06	0.01	0.18	0.34

Intersection Summary

95th percentile volume exceeds capacity, queue may be longer.
Queue shown is maximum after two cycles.

Movement	EBL	EBT	EBR	WBL	WBT	WBR	NBL	NBT	NBR	SBL	SBT	SBR
Lane Configurations												
Traffic Volume (veh/h)	288	683	50	10	412	112	29	4	6	80	4	209
Future Volume (veh/h)	362	800	50	10	566	132	29	4	6	96	4	269
Initial Q (Qb), veh	0	0	0	0	0	0	0	0	0	0	0	0
Ped-Bike Adj(A_pbT)	1.00		1.00	1.00		1.00	1.00		1.00	1.00		1.00
Parking Bus, Adj	1.00	1.00	1.00	1.00	1.00	1.00	1.00	1.00	1.00	1.00	1.00	1.00
Work Zone On Approach		No			No			No			No	
Adj Sat Flow, veh/h/ln	1870	1870	1870	1870	1870	1870	1870	1870	1870	1870	1870	1870
Adj Flow Rate, veh/h	393	870	54	11	615	143	32	4	7	104	4	292
Peak Hour Factor	0.92	0.92	0.92	0.92	0.92	0.92	0.92	0.92	0.92	0.92	0.92	0.92
Percent Heavy Veh, %	2	2	2	2	2	2	2	2	2	2	2	2
Cap, veh/h	431	2073	925	351	2073	925	76	5	502	79	2	502
Arrive On Green	0.58	0.58	0.58	0.58	0.58	0.58	0.32	0.32	0.32	0.32	0.32	0.32
Sat Flow, veh/h	707	3554	1585	605	3554	1585	0	16	1585	0	5	1585
Grp Volume(v), veh/h	393	870	54	11	615	143	36	0	7	108	0	292
Grp Sat Flow(s),veh/h/ln	707	1777	1585	605	1777	1585	16	0	1585	5	0	1585
Q Serve(g_s), s	44.7	12.2	1.3	0.9	7.8	3.7	0.0	0.0	0.3	0.0	0.0	13.9
Cycle Q Clear(g_c), s	52.5	12.2	1.3	13.1	7.8	3.7	28.5	0.0	0.3	28.5	0.0	13.9
Prop In Lane	1.00		1.00	1.00		1.00	0.89		1.00	0.96		1.00
Lane Grp Cap(c), veh/h	431	2073	925	351	2073	925	81	0	502	80	0	502
V/C Ratio(X)	0.91	0.42	0.06	0.03	0.30	0.15	0.45	0.00	0.01	1.35	0.00	0.58
Avail Cap(c_a), veh/h	431	2073	925	351	2073	925	81	0	502	80	0	502
HCM Platoon Ratio	1.00	1.00	1.00	1.00	1.00	1.00	1.00	1.00	1.00	1.00	1.00	1.00
Upstream Filter(I)	1.00	1.00	1.00	1.00	1.00	1.00	1.00	0.00	1.00	1.00	0.00	1.00
Uniform Delay (d), s/veh	25.1	10.3	8.1	14.0	9.4	8.6	40.9	0.0	21.1	44.4	0.0	25.8
Incr Delay (d2), s/veh	23.5	0.1	0.0	0.0	0.1	0.1	3.8	0.0	0.0	218.9	0.0	1.7
Initial Q Delay(d3),s/veh	0.0	0.0	0.0	0.0	0.0	0.0	0.0	0.0	0.0	0.0	0.0	0.0
%ile BackOfQ(50%),veh/ln	11.4	4.4	0.4	0.1	2.8	1.2	0.9	0.0	0.1	6.6	0.0	5.3
Unsig. Movement Delay, s/veh												
LnGrp Delay(d),s/veh	48.6	10.5	8.1	14.0	9.5	8.7	44.7	0.0	21.1	263.3	0.0	27.5
LnGrp LOS	D	B	A	B	A	A	D	A	C	F	A	C
Approach Vol, veh/h		1317			769			43			400	
Approach Delay, s/veh		21.8			9.4			40.9			91.1	
Approach LOS		C			A			D			F	

Timer - Assigned Phs	2	4	6	8
Phs Duration (G+Y+Rc), s	33.0	57.0	33.0	57.0
Change Period (Y+Rc), s	4.5	4.5	4.5	4.5
Max Green Setting (Gmax), s	28.5	52.5	28.5	52.5
Max Q Clear Time (g_c+I1), s	30.5	54.5	30.5	15.1
Green Ext Time (p_c), s	0.0	0.0	0.0	5.5

Intersection Summary	
HCM 6th Ctrl Delay	29.3
HCM 6th LOS	C

Lane Group	EBL	EBT	EBR	WBL	WBT	WBR	NBL	NBT	NBR	SBL	SBT	SBR
Lane Group Flow (vph)	312	643	60	20	500	45	25	50	25	42	30	174
v/c Ratio	0.60	0.30	0.06	0.04	0.24	0.05	0.10	0.08	0.08	0.18	0.05	0.41
Control Delay	11.0	4.4	1.5	3.8	4.1	1.6	17.8	16.7	9.1	18.7	16.6	7.2
Queue Delay	0.0	0.0	0.0	0.0	0.0	0.0	0.0	0.0	0.0	0.0	0.0	0.0
Total Delay	11.0	4.4	1.5	3.8	4.1	1.6	17.8	16.7	9.1	18.7	16.6	7.2
Queue Length 50th (ft)	33	28	0	1	21	0	5	5	0	9	3	0
Queue Length 95th (ft)	110	58	9	8	45	8	22	17	15	31	12	39
Internal Link Dist (ft)		2061			2031			478			1056	
Turn Bay Length (ft)	325		275	275		275	250		275	250		275
Base Capacity (vph)	678	2747	1242	590	2747	1239	1015	2618	1177	996	2618	1216
Starvation Cap Reductn	0	0	0	0	0	0	0	0	0	0	0	0
Spillback Cap Reductn	0	0	0	0	0	0	0	0	0	0	0	0
Storage Cap Reductn	0	0	0	0	0	0	0	0	0	0	0	0
Reduced v/c Ratio	0.46	0.23	0.05	0.03	0.18	0.04	0.02	0.02	0.02	0.04	0.01	0.14

Intersection Summary

Movement	EBL	EBT	EBR	WBL	WBT	WBR	NBL	NBT	NBR	SBL	SBT	SBR
Lane Configurations												
Traffic Volume (veh/h)	139	401	60	20	246	41	25	50	25	39	30	76
Future Volume (veh/h)	287	592	60	20	460	41	25	50	25	39	30	160
Initial Q (Qb), veh	0	0	0	0	0	0	0	0	0	0	0	0
Ped-Bike Adj(A_pbT)	1.00		1.00	1.00		1.00	1.00		1.00	1.00		1.00
Parking Bus, Adj	1.00	1.00	1.00	1.00	1.00	1.00	1.00	1.00	1.00	1.00	1.00	1.00
Work Zone On Approach		No			No			No			No	
Adj Sat Flow, veh/h/ln	1870	1870	1870	1870	1870	1870	1870	1870	1870	1870	1870	1870
Adj Flow Rate, veh/h	312	643	60	20	500	45	25	50	25	42	30	174
Peak Hour Factor	0.92	0.92	1.00	1.00	0.92	0.92	1.00	1.00	1.00	0.92	1.00	0.92
Percent Heavy Veh, %	2	2	2	2	2	2	2	2	2	2	2	2
Cap, veh/h	632	2042	911	555	2042	911	400	637	284	419	637	284
Arrive On Green	0.57	0.57	0.57	0.57	0.57	0.57	0.18	0.18	0.18	0.18	0.18	0.18
Sat Flow, veh/h	862	3554	1585	744	3554	1585	1178	3554	1585	1325	3554	1585
Grp Volume(v), veh/h	312	643	60	20	500	45	25	50	25	42	30	174
Grp Sat Flow(s),veh/h/ln	862	1777	1585	744	1777	1585	1178	1777	1585	1325	1777	1585
Q Serve(g_s), s	10.3	3.4	0.6	0.5	2.5	0.5	0.7	0.4	0.5	1.0	0.3	3.7
Cycle Q Clear(g_c), s	12.8	3.4	0.6	4.0	2.5	0.5	0.9	0.4	0.5	1.4	0.3	3.7
Prop In Lane	1.00		1.00	1.00		1.00	1.00		1.00	1.00		1.00
Lane Grp Cap(c), veh/h	632	2042	911	555	2042	911	400	637	284	419	637	284
V/C Ratio(X)	0.49	0.31	0.07	0.04	0.24	0.05	0.06	0.08	0.09	0.10	0.05	0.61
Avail Cap(c_a), veh/h	879	3061	1365	768	3061	1365	1139	2867	1279	1250	2867	1279
HCM Platoon Ratio	1.00	1.00	1.00	1.00	1.00	1.00	1.00	1.00	1.00	1.00	1.00	1.00
Upstream Filter(I)	1.00	1.00	1.00	1.00	1.00	1.00	1.00	1.00	1.00	1.00	1.00	1.00
Uniform Delay (d), s/veh	7.0	4.0	3.4	5.1	3.8	3.4	12.8	12.5	12.5	13.1	12.4	13.8
Incr Delay (d2), s/veh	0.6	0.1	0.0	0.0	0.1	0.0	0.1	0.1	0.1	0.1	0.0	2.1
Initial Q Delay(d3),s/veh	0.0	0.0	0.0	0.0	0.0	0.0	0.0	0.0	0.0	0.0	0.0	0.0
%ile BackOfQ(50%),veh/ln	1.1	0.6	0.1	0.1	0.4	0.1	0.1	0.1	0.1	0.3	0.1	1.2
Unsig. Movement Delay, s/veh												
LnGrp Delay(d),s/veh	7.6	4.1	3.5	5.1	3.9	3.4	12.9	12.5	12.6	13.2	12.5	16.0
LnGrp LOS	A	A	A	A	A	A	B	B	B	B	B	B
Approach Vol, veh/h		1015			565			100			246	
Approach Delay, s/veh		5.2			3.9			12.7			15.1	
Approach LOS		A			A			B			B	

Timer - Assigned Phs		2		4		6		8				
Phs Duration (G+Y+Rc), s		11.1		25.5		11.1		25.5				
Change Period (Y+Rc), s		4.5		4.5		4.5		4.5				
Max Green Setting (Gmax), s		29.5		31.5		29.5		31.5				
Max Q Clear Time (g_c+I1), s		2.9		14.8		5.7		6.0				
Green Ext Time (p_c), s		0.4		6.2		0.9		3.8				

Intersection Summary												
HCM 6th Ctrl Delay			6.4									
HCM 6th LOS			A									

Lane Group	EBL	EBT	EBR	WBL	WBT	WBR	NBL	NBT	NBR	SBL	SBT	SBR
Lane Group Flow (vph)	192	962	65	40	658	30	150	5	15	7	5	122
v/c Ratio	0.49	0.52	0.08	0.16	0.35	0.04	0.44	0.01	0.04	0.02	0.01	0.26
Control Delay	12.0	7.6	2.3	7.5	6.4	2.8	17.8	11.4	4.3	11.7	11.4	5.9
Queue Delay	0.0	0.0	0.0	0.0	0.0	0.0	0.0	0.0	0.0	0.0	0.0	0.0
Total Delay	12.0	7.6	2.3	7.5	6.4	2.8	17.8	11.4	4.3	11.7	11.4	5.9
Queue Length 50th (ft)	23	60	0	4	37	0	30	1	0	1	1	3
Queue Length 95th (ft)	79	121	12	18	76	8	67	6	7	7	6	29
Internal Link Dist (ft)		1938			2061			454			615	
Turn Bay Length (ft)	300		275	275		250	275		275	275		125
Base Capacity (vph)	436	2061	949	280	2061	934	1036	1374	1174	1036	1374	1195
Starvation Cap Reductn	0	0	0	0	0	0	0	0	0	0	0	0
Spillback Cap Reductn	0	0	0	0	0	0	0	0	0	0	0	0
Storage Cap Reductn	0	0	0	0	0	0	0	0	0	0	0	0
Reduced v/c Ratio	0.44	0.47	0.07	0.14	0.32	0.03	0.14	0.00	0.01	0.01	0.00	0.10

Intersection Summary

Movement	EBL	EBT	EBR	WBL	WBT	WBR	NBL	NBT	NBR	SBL	SBT	SBR
Lane Configurations												
Traffic Volume (veh/h)	177	546	65	40	307	28	150	5	15	6	5	112
Future Volume (veh/h)	177	885	65	40	605	28	150	5	15	6	5	112
Initial Q (Qb), veh	0	0	0	0	0	0	0	0	0	0	0	0
Ped-Bike Adj(A_pbT)	1.00		1.00	1.00		1.00	1.00		1.00	1.00		1.00
Parking Bus, Adj	1.00	1.00	1.00	1.00	1.00	1.00	1.00	1.00	1.00	1.00	1.00	1.00
Work Zone On Approach		No			No			No			No	
Adj Sat Flow, veh/h/ln	1870	1870	1870	1870	1870	1870	1870	1870	1870	1870	1870	1870
Adj Flow Rate, veh/h	192	962	65	40	658	30	150	5	15	7	5	122
Peak Hour Factor	0.92	0.92	1.00	1.00	0.92	0.92	1.00	1.00	1.00	0.92	1.00	0.92
Percent Heavy Veh, %	2	2	2	2	2	2	2	2	2	2	2	2
Cap, veh/h	546	1915	854	420	1915	854	453	352	298	477	352	298
Arrive On Green	0.54	0.54	0.54	0.54	0.54	0.54	0.19	0.19	0.19	0.19	0.19	0.19
Sat Flow, veh/h	755	3554	1585	549	3554	1585	1264	1870	1585	1392	1870	1585
Grp Volume(v), veh/h	192	962	65	40	658	30	150	5	15	7	5	122
Grp Sat Flow(s),veh/h/ln	755	1777	1585	549	1777	1585	1264	1870	1585	1392	1870	1585
Q Serve(g_s), s	6.4	5.6	0.7	1.6	3.5	0.3	3.6	0.1	0.3	0.1	0.1	2.2
Cycle Q Clear(g_c), s	9.8	5.6	0.7	7.3	3.5	0.3	3.7	0.1	0.3	0.2	0.1	2.2
Prop In Lane	1.00		1.00	1.00		1.00	1.00		1.00	1.00		1.00
Lane Grp Cap(c), veh/h	546	1915	854	420	1915	854	453	352	298	477	352	298
V/C Ratio(X)	0.35	0.50	0.08	0.10	0.34	0.04	0.33	0.01	0.05	0.01	0.01	0.41
Avail Cap(c_a), veh/h	654	2425	1082	499	2425	1082	1308	1616	1370	1419	1616	1370
HCM Platoon Ratio	1.00	1.00	1.00	1.00	1.00	1.00	1.00	1.00	1.00	1.00	1.00	1.00
Upstream Filter(I)	1.00	1.00	1.00	1.00	1.00	1.00	1.00	1.00	1.00	1.00	1.00	1.00
Uniform Delay (d), s/veh	7.1	4.8	3.7	7.1	4.3	3.6	12.4	10.9	11.0	11.0	10.9	11.8
Incr Delay (d2), s/veh	0.4	0.2	0.0	0.1	0.1	0.0	0.4	0.0	0.1	0.0	0.0	0.9
Initial Q Delay(d3),s/veh	0.0	0.0	0.0	0.0	0.0	0.0	0.0	0.0	0.0	0.0	0.0	0.0
%ile BackOfQ(50%),veh/ln	0.7	0.9	0.1	0.1	0.6	0.0	0.8	0.0	0.1	0.0	0.0	0.7
Unsig. Movement Delay, s/veh												
LnGrp Delay(d),s/veh	7.5	5.0	3.7	7.2	4.4	3.6	12.8	10.9	11.0	11.0	10.9	12.7
LnGrp LOS	A	A	A	A	A	A	B	B	B	B	B	B
Approach Vol, veh/h		1219			728			170			134	
Approach Delay, s/veh		5.3			4.5			12.6			12.5	
Approach LOS		A			A			B			B	

Timer - Assigned Phs		2		4		6		8				
Phs Duration (G+Y+Rc), s		10.7		22.3		10.7		22.3				
Change Period (Y+Rc), s		4.5		4.5		4.5		4.5				
Max Green Setting (Gmax), s		28.5		22.5		28.5		22.5				
Max Q Clear Time (g_c+I1), s		5.7		11.8		4.2		9.3				
Green Ext Time (p_c), s		0.5		5.9		0.4		4.2				

Intersection Summary	
HCM 6th Ctrl Delay	6.0
HCM 6th LOS	A

Lane Group	WBL	WBR	NBT	NBR	SBL	SBT
Lane Group Flow (vph)	899	355	1480	1341	599	790
v/c Ratio	1.03	0.41	1.10	0.85	1.17	0.33
Control Delay	82.7	17.5	93.8	5.9	129.8	8.8
Queue Delay	0.0	0.0	0.0	0.0	0.0	0.0
Total Delay	82.7	17.5	93.8	5.9	129.8	8.8
Queue Length 50th (ft)	~384	152	~686	0	~504	124
Queue Length 95th (ft)	#511	225	#825	0	#731	156
Internal Link Dist (ft)	1938		1222			1449
Turn Bay Length (ft)	325			150	1000	
Base Capacity (vph)	872	866	1341	1583	511	2374
Starvation Cap Reductn	0	0	0	0	0	0
Spillback Cap Reductn	0	0	0	0	0	0
Storage Cap Reductn	0	0	0	0	0	0
Reduced v/c Ratio	1.03	0.41	1.10	0.85	1.17	0.33

Intersection Summary

~ Volume exceeds capacity, queue is theoretically infinite.
Queue shown is maximum after two cycles.

95th percentile volume exceeds capacity, queue may be longer.
Queue shown is maximum after two cycles.

Movement	WBL	WBR	NBT	NBR	SBL	SBT
Lane Configurations						
Traffic Volume (veh/h)	529	327	1095	895	551	558
Future Volume (veh/h)	827	327	1362	1234	551	727
Initial Q (Qb), veh	0	0	0	0	0	0
Ped-Bike Adj(A_pbT)	1.00	1.00		1.00	1.00	
Parking Bus, Adj	1.00	1.00	1.00	1.00	1.00	1.00
Work Zone On Approach	No		No			No
Adj Sat Flow, veh/h/ln	1870	1870	1870	1870	1870	1870
Adj Flow Rate, veh/h	899	355	1480	0	599	790
Peak Hour Factor	0.92	0.92	0.92	0.92	0.92	0.92
Percent Heavy Veh, %	2	2	2	2	2	2
Cap, veh/h	878	806	1347		513	2384
Arrive On Green	0.25	0.25	0.38	0.00	0.25	0.67
Sat Flow, veh/h	3456	1585	3647	1585	1781	3647
Grp Volume(v), veh/h	899	355	1480	0	599	790
Grp Sat Flow(s),veh/h/ln	1728	1585	1777	1585	1781	1777
Q Serve(g_s), s	30.5	17.0	45.5	0.0	30.5	11.3
Cycle Q Clear(g_c), s	30.5	17.0	45.5	0.0	30.5	11.3
Prop In Lane	1.00	1.00		1.00	1.00	
Lane Grp Cap(c), veh/h	878	806	1347		513	2384
V/C Ratio(X)	1.02	0.44	1.10		1.17	0.33
Avail Cap(c_a), veh/h	878	806	1347		513	2384
HCM Platoon Ratio	1.00	1.00	1.00	1.00	1.00	1.00
Upstream Filter(I)	1.00	1.00	1.00	0.00	1.00	1.00
Uniform Delay (d), s/veh	44.8	18.7	37.3	0.0	38.1	8.4
Incr Delay (d2), s/veh	36.5	0.4	56.1	0.0	95.1	0.4
Initial Q Delay(d3),s/veh	0.0	0.0	0.0	0.0	0.0	0.0
%ile BackOfQ(50%),veh/ln	17.4	6.3	29.8	0.0	27.7	4.2
Unsig. Movement Delay, s/veh						
LnGrp Delay(d),s/veh	81.2	19.1	93.3	0.0	133.2	8.7
LnGrp LOS	F	B	F		F	A
Approach Vol, veh/h	1254		1480	A		1389
Approach Delay, s/veh	63.6		93.3			62.4
Approach LOS	E		F			E

Timer - Assigned Phs	1	2				6	8
Phs Duration (G+Y+Rc), s	35.0	50.0				85.0	35.0
Change Period (Y+Rc), s	4.5	4.5				4.5	4.5
Max Green Setting (Gmax), s	30.5	45.5				80.5	30.5
Max Q Clear Time (g_c+I1), s	32.5	47.5				13.3	32.5
Green Ext Time (p_c), s	0.0	0.0				6.8	0.0

Intersection Summary	
HCM 6th Ctrl Delay	73.9
HCM 6th LOS	E

Notes

Unsignalized Delay for [NBR] is excluded from calculations of the approach delay and intersection delay.

Intersection	
Int Delay, s/veh	3.4

Movement	EBT	EBR	WBL	WBT	NBL	NBR
Lane Configurations						
Traffic Vol, veh/h	382	0	0	274	0	0
Future Vol, veh/h	711	139	41	487	114	29
Conflicting Peds, #/hr	0	0	0	0	0	0
Sign Control	Free	Free	Free	Free	Stop	Stop
RT Channelized	-	None	-	None	-	None
Storage Length	-	235	235	-	200	0
Veh in Median Storage, #	0	-	-	0	0	-
Grade, %	0	-	-	0	0	-
Peak Hour Factor	100	100	100	100	100	100
Heavy Vehicles, %	2	2	2	2	2	2
Mvmt Flow	711	139	41	487	114	29

Major/Minor	Major1		Major2		Minor1	
Conflicting Flow All	0	0	850	0	1037	356
Stage 1	-	-	-	-	711	-
Stage 2	-	-	-	-	326	-
Critical Hdwy	-	-	4.14	-	6.84	6.94
Critical Hdwy Stg 1	-	-	-	-	5.84	-
Critical Hdwy Stg 2	-	-	-	-	5.84	-
Follow-up Hdwy	-	-	2.22	-	3.52	3.32
Pot Cap-1 Maneuver	-	-	784	-	227	640
Stage 1	-	-	-	-	448	-
Stage 2	-	-	-	-	704	-
Platoon blocked, %	-	-		-		
Mov Cap-1 Maneuver	-	-	784	-	215	640
Mov Cap-2 Maneuver	-	-	-	-	215	-
Stage 1	-	-	-	-	448	-
Stage 2	-	-	-	-	667	-

Approach	EB	WB	NB
HCM Control Delay, s	0	0.8	33.5
HCM LOS			D

Minor Lane/Major Mvmt	NBLn1	NBLn2	EBT	EBR	WBL	WBT
Capacity (veh/h)	215	640	-	-	784	-
HCM Lane V/C Ratio	0.53	0.045	-	-	0.052	-
HCM Control Delay (s)	39.2	10.9	-	-	9.8	-
HCM Lane LOS	E	B	-	-	A	-
HCM 95th %tile Q(veh)	2.8	0.1	-	-	0.2	-

Intersection	
Int Delay, s/veh	4.9

Movement	EBT	EBR	WBL	WBT	NBL	NBR
Lane Configurations						
Traffic Vol, veh/h	382	0	0	274	0	0
Future Vol, veh/h	481	259	28	314	214	18
Conflicting Peds, #/hr	0	0	0	0	0	0
Sign Control	Free	Free	Free	Free	Stop	Stop
RT Channelized	-	None	-	None	-	None
Storage Length	-	235	235	-	0	0
Veh in Median Storage, #	0	-	-	0	0	-
Grade, %	0	-	-	0	0	-
Peak Hour Factor	100	100	100	100	100	100
Heavy Vehicles, %	2	2	2	2	2	2
Mvmt Flow	481	259	28	314	214	18

Major/Minor	Major1		Major2		Minor1	
Conflicting Flow All	0	0	740	0	694	241
Stage 1	-	-	-	-	481	-
Stage 2	-	-	-	-	213	-
Critical Hdwy	-	-	4.14	-	6.84	6.94
Critical Hdwy Stg 1	-	-	-	-	5.84	-
Critical Hdwy Stg 2	-	-	-	-	5.84	-
Follow-up Hdwy	-	-	2.22	-	3.52	3.32
Pot Cap-1 Maneuver	-	-	862	-	377	760
Stage 1	-	-	-	-	588	-
Stage 2	-	-	-	-	802	-
Platoon blocked, %	-	-		-		
Mov Cap-1 Maneuver	-	-	862	-	365	760
Mov Cap-2 Maneuver	-	-	-	-	365	-
Stage 1	-	-	-	-	588	-
Stage 2	-	-	-	-	776	-

Approach	EB	WB	NB
HCM Control Delay, s	0	0.8	26.5
HCM LOS			D

Minor Lane/Major Mvmt	NBLn1	NBLn2	EBT	EBR	WBL	WBT
Capacity (veh/h)	365	760	-	-	862	-
HCM Lane V/C Ratio	0.586	0.024	-	-	0.032	-
HCM Control Delay (s)	27.9	9.9	-	-	9.3	-
HCM Lane LOS	D	A	-	-	A	-
HCM 95th %tile Q(veh)	3.6	0.1	-	-	0.1	-

Intersection	
Int Delay, s/veh	3.8

Movement	EBL	EBT	EBR	WBL	WBT	WBR	NBL	NBT	NBR	SBL	SBT	SBR
Lane Configurations												
Traffic Vol, veh/h	0	0	0	0	0	0	0	0	0	0	0	0
Future Vol, veh/h	74	0	5	3	0	21	6	48	3	28	75	77
Conflicting Peds, #/hr	0	0	0	0	0	0	0	0	0	0	0	0
Sign Control	Stop	Stop	Stop	Stop	Stop	Stop	Free	Free	Free	Free	Free	Free
RT Channelized	-	-	None	-	-	None	-	-	None	-	-	None
Storage Length	-	-	-	-	-	-	-	-	-	-	-	-
Veh in Median Storage, #	-	0	-	-	0	-	-	0	-	-	0	-
Grade, %	-	0	-	-	0	-	-	0	-	-	0	-
Peak Hour Factor	100	100	100	100	100	100	100	100	100	100	100	100
Heavy Vehicles, %	2	2	2	2	2	2	2	2	2	2	2	2
Mvmt Flow	74	0	5	3	0	21	6	48	3	28	75	77

Major/Minor	Minor2			Minor1			Major1			Major2		
Conflicting Flow All	242	233	114	234	270	50	152	0	0	51	0	0
Stage 1	170	170	-	62	62	-	-	-	-	-	-	-
Stage 2	72	63	-	172	208	-	-	-	-	-	-	-
Critical Hdwy	7.12	6.52	6.22	7.12	6.52	6.22	4.12	-	-	4.12	-	-
Critical Hdwy Stg 1	6.12	5.52	-	6.12	5.52	-	-	-	-	-	-	-
Critical Hdwy Stg 2	6.12	5.52	-	6.12	5.52	-	-	-	-	-	-	-
Follow-up Hdwy	3.518	4.018	3.318	3.518	4.018	3.318	2.218	-	-	2.218	-	-
Pot Cap-1 Maneuver	712	667	939	721	636	1018	1429	-	-	1555	-	-
Stage 1	832	758	-	949	843	-	-	-	-	-	-	-
Stage 2	938	842	-	830	730	-	-	-	-	-	-	-
Platoon blocked, %								-	-		-	-
Mov Cap-1 Maneuver	684	651	939	704	621	1018	1429	-	-	1555	-	-
Mov Cap-2 Maneuver	684	651	-	704	621	-	-	-	-	-	-	-
Stage 1	829	743	-	945	840	-	-	-	-	-	-	-
Stage 2	915	839	-	809	715	-	-	-	-	-	-	-

Approach	EB	WB	NB	SB
HCM Control Delay, s	10.8	8.8	0.8	1.1
HCM LOS	B	A		

Minor Lane/Major Mvmt	NBL	NBT	NBR	EBLn1	WBLn1	SBL	SBT	SBR
Capacity (veh/h)	1429	-	-	696	964	1555	-	-
HCM Lane V/C Ratio	0.004	-	-	0.114	0.025	0.018	-	-
HCM Control Delay (s)	7.5	0	-	10.8	8.8	7.4	0	-
HCM Lane LOS	A	A	-	B	A	A	A	-
HCM 95th %tile Q(veh)	0	-	-	0.4	0.1	0.1	-	-

Intersection	
Int Delay, s/veh	6.5

Movement	EBL	EBT	EBR	WBL	WBT	WBR	NBL	NBT	NBR	SBL	SBT	SBR
Lane Configurations												
Traffic Vol, veh/h	0	0	0	0	0	0	0	0	0	0	0	0
Future Vol, veh/h	25	6	44	53	10	32	72	0	87	43	0	40
Conflicting Peds, #/hr	0	0	0	0	0	0	0	0	0	0	0	0
Sign Control	Stop	Stop	Stop	Stop	Stop	Stop	Free	Free	Free	Free	Free	Free
RT Channelized	-	-	None	-	-	None	-	-	None	-	-	None
Storage Length	-	-	-	-	-	-	-	-	-	-	-	-
Veh in Median Storage, #	-	0	-	-	0	-	-	0	-	-	0	-
Grade, %	-	0	-	-	0	-	-	0	-	-	0	-
Peak Hour Factor	100	100	100	100	100	100	100	100	100	100	100	100
Heavy Vehicles, %	2	2	2	2	2	2	2	2	2	2	2	2
Mvmt Flow	25	6	44	53	10	32	72	0	87	43	0	40

Major/Minor	Minor2			Minor1			Major1			Major2		
Conflicting Flow All	315	337	20	319	314	44	40	0	0	87	0	0
Stage 1	106	106	-	188	188	-	-	-	-	-	-	-
Stage 2	209	231	-	131	126	-	-	-	-	-	-	-
Critical Hdwy	7.12	6.52	6.22	7.12	6.52	6.22	4.12	-	-	4.12	-	-
Critical Hdwy Stg 1	6.12	5.52	-	6.12	5.52	-	-	-	-	-	-	-
Critical Hdwy Stg 2	6.12	5.52	-	6.12	5.52	-	-	-	-	-	-	-
Follow-up Hdwy	3.518	4.018	3.318	3.518	4.018	3.318	2.218	-	-	2.218	-	-
Pot Cap-1 Maneuver	638	584	1058	634	601	1026	1570	-	-	1509	-	-
Stage 1	900	807	-	814	745	-	-	-	-	-	-	-
Stage 2	793	713	-	873	792	-	-	-	-	-	-	-
Platoon blocked, %								-	-		-	-
Mov Cap-1 Maneuver	574	539	1058	567	555	1026	1570	-	-	1509	-	-
Mov Cap-2 Maneuver	574	539	-	567	555	-	-	-	-	-	-	-
Stage 1	856	784	-	774	708	-	-	-	-	-	-	-
Stage 2	720	678	-	806	769	-	-	-	-	-	-	-

Approach	EB	WB	NB	SB
HCM Control Delay, s	10.1	11.3	3.4	3.9
HCM LOS	B	B		

Minor Lane/Major Mvmt	NBL	NBT	NBR	EBLn1	WBLn1	SBL	SBT	SBR
Capacity (veh/h)	1570	-	-	779	666	1509	-	-
HCM Lane V/C Ratio	0.046	-	-	0.096	0.143	0.028	-	-
HCM Control Delay (s)	7.4	0	-	10.1	11.3	7.5	0	-
HCM Lane LOS	A	A	-	B	B	A	A	-
HCM 95th %tile Q(veh)	0.1	-	-	0.3	0.5	0.1	-	-

Intersection	
Int Delay, s/veh	3.1

Movement	EBL	EBT	WBT	WBR	SBL	SBR
Lane Configurations						
Traffic Vol, veh/h	0	0	0	0	0	0
Future Vol, veh/h	58	78	65	8	5	30
Conflicting Peds, #/hr	0	0	0	0	0	0
Sign Control	Free	Free	Free	Free	Stop	Stop
RT Channelized	-	None	-	None	-	None
Storage Length	-	-	-	-	-	-
Veh in Median Storage, #	-	0	0	-	0	-
Grade, %	-	0	0	-	0	-
Peak Hour Factor	100	100	100	100	100	100
Heavy Vehicles, %	2	2	2	2	2	2
Mvmt Flow	58	78	65	8	5	30

Major/Minor	Major1		Major2		Minor2	
Conflicting Flow All	73	0	-	0	263	69
Stage 1	-	-	-	-	69	-
Stage 2	-	-	-	-	194	-
Critical Hdwy	4.12	-	-	-	6.42	6.22
Critical Hdwy Stg 1	-	-	-	-	5.42	-
Critical Hdwy Stg 2	-	-	-	-	5.42	-
Follow-up Hdwy	2.218	-	-	-	3.518	3.318
Pot Cap-1 Maneuver	1527	-	-	-	726	994
Stage 1	-	-	-	-	954	-
Stage 2	-	-	-	-	839	-
Platoon blocked, %		-	-	-		
Mov Cap-1 Maneuver	1527	-	-	-	697	994
Mov Cap-2 Maneuver	-	-	-	-	697	-
Stage 1	-	-	-	-	916	-
Stage 2	-	-	-	-	839	-

Approach	EB	WB	SB
HCM Control Delay, s	3.2	0	9
HCM LOS			A

Minor Lane/Major Mvmt	EBL	EBT	WBT	WBR	SBLn1
Capacity (veh/h)	1527	-	-	-	937
HCM Lane V/C Ratio	0.038	-	-	-	0.037
HCM Control Delay (s)	7.5	0	-	-	9
HCM Lane LOS	A	A	-	-	A
HCM 95th %tile Q(veh)	0.1	-	-	-	0.1

Intersection	
Int Delay, s/veh	2.9

Movement	EBL	EBT	EBR	WBL	WBT	WBR	NBL	NBT	NBR	SBL	SBT	SBR
Lane Configurations												
Traffic Vol, veh/h	0	0	0	0	0	0	0	0	0	0	0	0
Future Vol, veh/h	21	29	18	26	54	7	0	0	0	3	1	14
Conflicting Peds, #/hr	0	0	0	0	0	0	0	0	0	0	0	0
Sign Control	Free	Free	Free	Free	Free	Free	Stop	Stop	Stop	Stop	Stop	Stop
RT Channelized	-	-	None	-	-	None	-	-	None	-	-	None
Storage Length	-	-	-	-	-	-	-	-	-	-	-	-
Veh in Median Storage, #	-	0	-	-	0	-	-	0	-	-	0	-
Grade, %	-	0	-	-	0	-	-	0	-	-	0	-
Peak Hour Factor	100	100	100	100	100	100	100	100	100	100	100	100
Heavy Vehicles, %	2	2	2	2	2	2	2	2	2	2	2	2
Mvmt Flow	21	29	18	26	54	7	0	0	0	3	1	14

Major/Minor	Major1			Major2			Minor1			Minor2		
Conflicting Flow All	61	0	0	47	0	0	197	193	38	190	199	58
Stage 1	-	-	-	-	-	-	80	80	-	110	110	-
Stage 2	-	-	-	-	-	-	117	113	-	80	89	-
Critical Hdwy	4.12	-	-	4.12	-	-	7.12	6.52	6.22	7.12	6.52	6.22
Critical Hdwy Stg 1	-	-	-	-	-	-	6.12	5.52	-	6.12	5.52	-
Critical Hdwy Stg 2	-	-	-	-	-	-	6.12	5.52	-	6.12	5.52	-
Follow-up Hdwy	2.218	-	-	2.218	-	-	3.518	4.018	3.318	3.518	4.018	3.318
Pot Cap-1 Maneuver	1542	-	-	1560	-	-	762	702	1034	770	697	1008
Stage 1	-	-	-	-	-	-	929	828	-	895	804	-
Stage 2	-	-	-	-	-	-	888	802	-	929	821	-
Platoon blocked, %		-	-		-	-						
Mov Cap-1 Maneuver	1542	-	-	1560	-	-	733	680	1034	752	675	1008
Mov Cap-2 Maneuver	-	-	-	-	-	-	733	680	-	752	675	-
Stage 1	-	-	-	-	-	-	916	816	-	882	790	-
Stage 2	-	-	-	-	-	-	860	788	-	916	810	-

Approach	EB	WB	NB	SB
HCM Control Delay, s	2.3	2.2	0	8.9
HCM LOS			A	A

Minor Lane/Major Mvmt	NBLn1	EBL	EBT	EBR	WBL	WBT	WBR	SBLn1
Capacity (veh/h)	-	1542	-	-	1560	-	-	930
HCM Lane V/C Ratio	-	0.014	-	-	0.017	-	-	0.019
HCM Control Delay (s)	0	7.4	0	-	7.3	0	-	8.9
HCM Lane LOS	A	A	A	-	A	A	-	A
HCM 95th %tile Q(veh)	-	0	-	-	0.1	-	-	0.1

Intersection	
Int Delay, s/veh	7.2

Movement	EBL	EBT	EBR	WBL	WBT	WBR	NBL	NBT	NBR	SBL	SBT	SBR
Lane Configurations												
Traffic Vol, veh/h	0	0	0	0	0	0	0	0	0	0	0	0
Future Vol, veh/h	5	6	21	43	24	4	58	19	56	2	11	5
Conflicting Peds, #/hr	0	0	0	0	0	0	0	0	0	0	0	0
Sign Control	Free	Free	Free	Free	Free	Free	Stop	Stop	Stop	Stop	Stop	Stop
RT Channelized	-	-	None	-	-	None	-	-	None	-	-	None
Storage Length	-	-	-	-	-	-	-	-	-	-	-	-
Veh in Median Storage, #	-	0	-	-	0	-	-	0	-	-	0	-
Grade, %	-	0	-	-	0	-	-	0	-	-	0	-
Peak Hour Factor	100	100	100	100	100	100	100	100	100	100	100	100
Heavy Vehicles, %	2	2	2	2	2	2	2	2	2	2	2	2
Mvmt Flow	5	6	21	43	24	4	58	19	56	2	11	5

Major/Minor	Major1			Major2			Minor1			Minor2		
Conflicting Flow All	28	0	0	27	0	0	147	141	17	176	149	26
Stage 1	-	-	-	-	-	-	27	27	-	112	112	-
Stage 2	-	-	-	-	-	-	120	114	-	64	37	-
Critical Hdwy	4.12	-	-	4.12	-	-	7.12	6.52	6.22	7.12	6.52	6.22
Critical Hdwy Stg 1	-	-	-	-	-	-	6.12	5.52	-	6.12	5.52	-
Critical Hdwy Stg 2	-	-	-	-	-	-	6.12	5.52	-	6.12	5.52	-
Follow-up Hdwy	2.218	-	-	2.218	-	-	3.518	4.018	3.318	3.518	4.018	3.318
Pot Cap-1 Maneuver	1585	-	-	1587	-	-	821	750	1062	786	743	1050
Stage 1	-	-	-	-	-	-	990	873	-	893	803	-
Stage 2	-	-	-	-	-	-	884	801	-	947	864	-
Platoon blocked, %		-	-		-	-						
Mov Cap-1 Maneuver	1585	-	-	1587	-	-	788	727	1062	713	720	1050
Mov Cap-2 Maneuver	-	-	-	-	-	-	788	727	-	713	720	-
Stage 1	-	-	-	-	-	-	987	870	-	890	781	-
Stage 2	-	-	-	-	-	-	843	779	-	875	861	-

Approach	EB	WB	NB	SB
HCM Control Delay, s	1.1	4.4	9.9	9.7
HCM LOS			A	A

Minor Lane/Major Mvmt	NBLn1	EBL	EBT	EBR	WBL	WBT	WBR	SBLn1
Capacity (veh/h)	872	1585	-	-	1587	-	-	788
HCM Lane V/C Ratio	0.153	0.003	-	-	0.027	-	-	0.023
HCM Control Delay (s)	9.9	7.3	0	-	7.3	0	-	9.7
HCM Lane LOS	A	A	A	-	A	A	-	A
HCM 95th %tile Q(veh)	0.5	0	-	-	0.1	-	-	0.1

Intersection	
Int Delay, s/veh	3.5

Movement	EBL	EBT	EBR	WBL	WBT	WBR	NBL	NBT	NBR	SBL	SBT	SBR
Lane Configurations												
Traffic Vol, veh/h	0	0	0	0	0	0	0	0	0	0	0	0
Future Vol, veh/h	45	2	13	15	0	8	0	80	25	14	61	0
Conflicting Peds, #/hr	0	0	0	0	0	0	0	0	0	0	0	0
Sign Control	Stop	Stop	Stop	Stop	Stop	Stop	Free	Free	Free	Free	Free	Free
RT Channelized	-	-	None	-	-	None	-	-	None	-	-	None
Storage Length	-	-	-	-	-	-	-	-	-	-	-	-
Veh in Median Storage, #	-	0	-	-	0	-	-	0	-	-	0	-
Grade, %	-	0	-	-	0	-	-	0	-	-	0	-
Peak Hour Factor	100	100	100	100	100	100	100	100	100	100	100	100
Heavy Vehicles, %	2	2	2	2	2	2	2	2	2	2	2	2
Mvmt Flow	45	2	13	15	0	8	0	80	25	14	61	0

Major/Minor	Minor2			Minor1			Major1			Major2		
Conflicting Flow All	186	194	61	190	182	93	61	0	0	105	0	0
Stage 1	89	89	-	93	93	-	-	-	-	-	-	-
Stage 2	97	105	-	97	89	-	-	-	-	-	-	-
Critical Hdwy	7.12	6.52	6.22	7.12	6.52	6.22	4.12	-	-	4.12	-	-
Critical Hdwy Stg 1	6.12	5.52	-	6.12	5.52	-	-	-	-	-	-	-
Critical Hdwy Stg 2	6.12	5.52	-	6.12	5.52	-	-	-	-	-	-	-
Follow-up Hdwy	3.518	4.018	3.318	3.518	4.018	3.318	2.218	-	-	2.218	-	-
Pot Cap-1 Maneuver	775	701	1004	770	712	964	1542	-	-	1486	-	-
Stage 1	918	821	-	914	818	-	-	-	-	-	-	-
Stage 2	910	808	-	910	821	-	-	-	-	-	-	-
Platoon blocked, %								-	-		-	-
Mov Cap-1 Maneuver	763	694	1004	752	705	964	1542	-	-	1486	-	-
Mov Cap-2 Maneuver	763	694	-	752	705	-	-	-	-	-	-	-
Stage 1	918	813	-	914	818	-	-	-	-	-	-	-
Stage 2	902	808	-	887	813	-	-	-	-	-	-	-

Approach	EB	WB	NB	SB
HCM Control Delay, s	9.9	9.6	0	1.4
HCM LOS	A	A		

Minor Lane/Major Mvmt	NBL	NBT	NBR	EBLn1	WBLn1	SBL	SBT	SBR
Capacity (veh/h)	1542	-	-	802	814	1486	-	-
HCM Lane V/C Ratio	-	-	-	0.075	0.028	0.009	-	-
HCM Control Delay (s)	0	-	-	9.9	9.6	7.4	0	-
HCM Lane LOS	A	-	-	A	A	A	A	-
HCM 95th %tile Q(veh)	0	-	-	0.2	0.1	0	-	-

Intersection	
Int Delay, s/veh	3.2

Movement	EBL	EBT	EBR	WBL	WBT	WBR	NBL	NBT	NBR	SBL	SBT	SBR
Lane Configurations												
Traffic Vol, veh/h	0	0	0	0	0	0	0	0	0	0	0	0
Future Vol, veh/h	15	25	24	15	49	14	16	0	7	10	0	6
Conflicting Peds, #/hr	0	0	0	0	0	0	0	0	0	0	0	0
Sign Control	Free	Free	Free	Free	Free	Free	Stop	Stop	Stop	Stop	Stop	Stop
RT Channelized	-	-	None	-	-	None	-	-	None	-	-	None
Storage Length	-	-	-	-	-	-	-	-	-	-	-	-
Veh in Median Storage, #	-	0	-	-	0	-	-	0	-	-	0	-
Grade, %	-	0	-	-	0	-	-	0	-	-	0	-
Peak Hour Factor	100	100	100	100	100	100	100	100	100	100	100	100
Heavy Vehicles, %	2	2	2	2	2	2	2	2	2	2	2	2
Mvmt Flow	15	25	24	15	49	14	16	0	7	10	0	6

Major/Minor	Major1			Major2			Minor1			Minor2		
Conflicting Flow All	63	0	0	49	0	0	156	160	37	157	165	56
Stage 1	-	-	-	-	-	-	67	67	-	86	86	-
Stage 2	-	-	-	-	-	-	89	93	-	71	79	-
Critical Hdwy	4.12	-	-	4.12	-	-	7.12	6.52	6.22	7.12	6.52	6.22
Critical Hdwy Stg 1	-	-	-	-	-	-	6.12	5.52	-	6.12	5.52	-
Critical Hdwy Stg 2	-	-	-	-	-	-	6.12	5.52	-	6.12	5.52	-
Follow-up Hdwy	2.218	-	-	2.218	-	-	3.518	4.018	3.318	3.518	4.018	3.318
Pot Cap-1 Maneuver	1540	-	-	1558	-	-	810	732	1035	809	728	1011
Stage 1	-	-	-	-	-	-	943	839	-	922	824	-
Stage 2	-	-	-	-	-	-	918	818	-	939	829	-
Platoon blocked, %		-	-		-	-						
Mov Cap-1 Maneuver	1540	-	-	1558	-	-	793	717	1035	791	713	1011
Mov Cap-2 Maneuver	-	-	-	-	-	-	793	717	-	791	713	-
Stage 1	-	-	-	-	-	-	934	831	-	913	816	-
Stage 2	-	-	-	-	-	-	903	810	-	923	821	-

Approach	EB	WB	NB	SB
HCM Control Delay, s	1.7	1.4	9.3	9.3
HCM LOS			A	A

Minor Lane/Major Mvmt	NBLn1	EBL	EBT	EBR	WBL	WBT	WBR	SBLn1
Capacity (veh/h)	854	1540	-	-	1558	-	-	861
HCM Lane V/C Ratio	0.027	0.01	-	-	0.01	-	-	0.019
HCM Control Delay (s)	9.3	7.4	0	-	7.3	0	-	9.3
HCM Lane LOS	A	A	A	-	A	A	-	A
HCM 95th %tile Q(veh)	0.1	0	-	-	0	-	-	0.1

Intersection	
Int Delay, s/veh	3.2

Movement	EBL	EBT	EBR	WBL	WBT	WBR	NBL	NBT	NBR	SBL	SBT	SBR
Lane Configurations												
Traffic Vol, veh/h	0	0	0	0	0	0	0	0	0	0	0	0
Future Vol, veh/h	2	38	2	37	57	23	15	0	8	8	0	6
Conflicting Peds, #/hr	0	0	0	0	0	0	0	0	0	0	0	0
Sign Control	Free	Free	Free	Free	Free	Free	Stop	Stop	Stop	Stop	Stop	Stop
RT Channelized	-	-	None	-	-	None	-	-	None	-	-	None
Storage Length	-	-	-	-	-	-	-	-	-	-	-	-
Veh in Median Storage, #	-	0	-	-	0	-	-	0	-	-	0	-
Grade, %	-	0	-	-	0	-	-	0	-	-	0	-
Peak Hour Factor	100	100	100	100	100	100	100	100	100	100	100	100
Heavy Vehicles, %	2	2	2	2	2	2	2	2	2	2	2	2
Mvmt Flow	2	38	2	37	57	23	15	0	8	8	0	6

Major/Minor	Major1			Major2			Minor1			Minor2		
Conflicting Flow All	80	0	0	40	0	0	189	197	39	190	187	69
Stage 1	-	-	-	-	-	-	43	43	-	143	143	-
Stage 2	-	-	-	-	-	-	146	154	-	47	44	-
Critical Hdwy	4.12	-	-	4.12	-	-	7.12	6.52	6.22	7.12	6.52	6.22
Critical Hdwy Stg 1	-	-	-	-	-	-	6.12	5.52	-	6.12	5.52	-
Critical Hdwy Stg 2	-	-	-	-	-	-	6.12	5.52	-	6.12	5.52	-
Follow-up Hdwy	2.218	-	-	2.218	-	-	3.518	4.018	3.318	3.518	4.018	3.318
Pot Cap-1 Maneuver	1518	-	-	1570	-	-	771	699	1033	770	708	994
Stage 1	-	-	-	-	-	-	971	859	-	860	779	-
Stage 2	-	-	-	-	-	-	857	770	-	967	858	-
Platoon blocked, %		-	-		-	-						
Mov Cap-1 Maneuver	1518	-	-	1570	-	-	751	681	1033	749	690	994
Mov Cap-2 Maneuver	-	-	-	-	-	-	751	681	-	749	690	-
Stage 1	-	-	-	-	-	-	970	858	-	859	760	-
Stage 2	-	-	-	-	-	-	831	751	-	959	857	-

Approach	EB	WB	NB	SB
HCM Control Delay, s	0.4	2.3	9.5	9.4
HCM LOS			A	A

Minor Lane/Major Mvmt	NBLn1	EBL	EBT	EBR	WBL	WBT	WBR	SBLn1
Capacity (veh/h)	830	1518	-	-	1570	-	-	837
HCM Lane V/C Ratio	0.028	0.001	-	-	0.024	-	-	0.017
HCM Control Delay (s)	9.5	7.4	0	-	7.3	0	-	9.4
HCM Lane LOS	A	A	A	-	A	A	-	A
HCM 95th %tile Q(veh)	0.1	0	-	-	0.1	-	-	0.1

Intersection	
Int Delay, s/veh	2.9

Movement	EBL	EBT	EBR	WBL	WBT	WBR	NBL	NBT	NBR	SBL	SBT	SBR
Lane Configurations												
Traffic Vol, veh/h	0	0	0	0	0	0	0	0	0	0	0	0
Future Vol, veh/h	54	0	4	4	0	35	4	143	6	55	180	52
Conflicting Peds, #/hr	0	0	0	0	0	0	0	0	0	0	0	0
Sign Control	Stop	Stop	Stop	Stop	Stop	Stop	Free	Free	Free	Free	Free	Free
RT Channelized	-	-	None	-	-	None	-	-	None	-	-	None
Storage Length	-	-	-	-	-	-	150	-	-	150	-	-
Veh in Median Storage, #	-	0	-	-	0	-	-	0	-	-	0	-
Grade, %	-	0	-	-	0	-	-	0	-	-	0	-
Peak Hour Factor	100	100	100	100	100	100	100	100	100	100	100	100
Heavy Vehicles, %	2	2	2	2	2	2	2	2	2	2	2	2
Mvmt Flow	54	0	4	4	0	35	4	143	6	55	180	52

Major/Minor	Minor2			Minor1			Major1			Major2		
Conflicting Flow All	396	473	116	354	496	75	232	0	0	149	0	0
Stage 1	316	316	-	154	154	-	-	-	-	-	-	-
Stage 2	80	157	-	200	342	-	-	-	-	-	-	-
Critical Hdwy	7.54	6.54	6.94	7.54	6.54	6.94	4.14	-	-	4.14	-	-
Critical Hdwy Stg 1	6.54	5.54	-	6.54	5.54	-	-	-	-	-	-	-
Critical Hdwy Stg 2	6.54	5.54	-	6.54	5.54	-	-	-	-	-	-	-
Follow-up Hdwy	3.52	4.02	3.32	3.52	4.02	3.32	2.22	-	-	2.22	-	-
Pot Cap-1 Maneuver	538	488	914	576	474	971	1333	-	-	1430	-	-
Stage 1	670	654	-	833	769	-	-	-	-	-	-	-
Stage 2	919	767	-	783	637	-	-	-	-	-	-	-
Platoon blocked, %								-	-		-	-
Mov Cap-1 Maneuver	500	465	914	553	452	971	1333	-	-	1430	-	-
Mov Cap-2 Maneuver	500	465	-	553	452	-	-	-	-	-	-	-
Stage 1	668	625	-	831	767	-	-	-	-	-	-	-
Stage 2	883	765	-	745	609	-	-	-	-	-	-	-

Approach	EB	WB	NB	SB
HCM Control Delay, s	12.9	9.2	0.2	1.5
HCM LOS	B	A		

Minor Lane/Major Mvmt	NBL	NBT	NBR	EBLn1	WBLn1	SBL	SBT	SBR
Capacity (veh/h)	1333	-	-	516	901	1430	-	-
HCM Lane V/C Ratio	0.003	-	-	0.112	0.043	0.038	-	-
HCM Control Delay (s)	7.7	0	-	12.9	9.2	7.6	0.1	-
HCM Lane LOS	A	A	-	B	A	A	A	-
HCM 95th %tile Q(veh)	0	-	-	0.4	0.1	0.1	-	-

Intersection	
Int Delay, s/veh	3.4

Movement	EBL	EBT	EBR	WBL	WBT	WBR	NBL	NBT	NBR	SBL	SBT	SBR
Lane Configurations												
Traffic Vol, veh/h	0	0	0	0	0	0	0	0	0	0	0	0
Future Vol, veh/h	52	0	6	3	0	24	7	77	5	38	75	75
Conflicting Peds, #/hr	0	0	0	0	0	0	0	0	0	0	0	0
Sign Control	Stop	Stop	Stop	Stop	Stop	Stop	Free	Free	Free	Free	Free	Free
RT Channelized	-	-	None	-	-	None	-	-	None	-	-	None
Storage Length	-	-	-	-	-	-	-	-	-	-	-	-
Veh in Median Storage, #	-	0	-	-	0	-	-	0	-	-	0	-
Grade, %	-	0	-	-	0	-	-	0	-	-	0	-
Peak Hour Factor	100	100	100	100	100	100	100	100	100	100	100	100
Heavy Vehicles, %	2	2	2	2	2	2	2	2	2	2	2	2
Mvmt Flow	52	0	6	3	0	24	7	77	5	38	75	75

Major/Minor	Minor2			Minor1			Major1			Major2		
Conflicting Flow All	295	285	75	208	320	80	150	0	0	82	0	0
Stage 1	189	189	-	94	94	-	-	-	-	-	-	-
Stage 2	106	96	-	114	226	-	-	-	-	-	-	-
Critical Hdwy	7.33	6.53	6.93	7.33	6.53	6.23	4.13	-	-	4.13	-	-
Critical Hdwy Stg 1	6.53	5.53	-	6.13	5.53	-	-	-	-	-	-	-
Critical Hdwy Stg 2	6.13	5.53	-	6.53	5.53	-	-	-	-	-	-	-
Follow-up Hdwy	3.519	4.019	3.319	3.519	4.019	3.319	2.219	-	-	2.219	-	-
Pot Cap-1 Maneuver	646	624	972	740	596	980	1430	-	-	1514	-	-
Stage 1	795	743	-	912	817	-	-	-	-	-	-	-
Stage 2	899	815	-	879	716	-	-	-	-	-	-	-
Platoon blocked, %								-	-		-	-
Mov Cap-1 Maneuver	614	603	972	717	576	980	1430	-	-	1514	-	-
Mov Cap-2 Maneuver	614	603	-	717	576	-	-	-	-	-	-	-
Stage 1	791	722	-	907	813	-	-	-	-	-	-	-
Stage 2	873	811	-	849	696	-	-	-	-	-	-	-

Approach	EB	WB	NB	SB
HCM Control Delay, s	11.2	8.9	0.6	1.5
HCM LOS	B	A		

Minor Lane/Major Mvmt	NBL	NBT	NBR	EBLn1	WBLn1	SBL	SBT	SBR
Capacity (veh/h)	1430	-	-	638	942	1514	-	-
HCM Lane V/C Ratio	0.005	-	-	0.091	0.029	0.025	-	-
HCM Control Delay (s)	7.5	-	-	11.2	8.9	7.4	0.1	-
HCM Lane LOS	A	-	-	B	A	A	A	-
HCM 95th %tile Q(veh)	0	-	-	0.3	0.1	0.1	-	-

Intersection	
Intersection Delay, s/veh	3.4
Intersection LOS	A

Approach	EB	WB	NB	SB
Entry Lanes	1	1	2	2
Conflicting Circle Lanes	1	1	1	1
Adj Approach Flow, veh/h	54	81	189	84
Demand Flow Rate, veh/h	55	83	193	86
Vehicles Circulating, veh/h	92	133	54	126
Vehicles Exiting, veh/h	120	114	93	90
Ped Vol Crossing Leg, #/h	0	0	0	0
Ped Cap Adj	1.000	1.000	1.000	1.000
Approach Delay, s/veh	3.3	3.6	3.3	3.2
Approach LOS	A	A	A	A

Lane	Left	Left	Left	Right	Left	Right
Designated Moves	LTR	LTR	LT	R	LT	R
Assumed Moves	LTR	LTR	LT	R	LT	R
RT Channelized						
Lane Util	1.000	1.000	0.585	0.415	0.640	0.360
Follow-Up Headway, s	2.609	2.609	2.535	2.535	2.535	2.535
Critical Headway, s	4.976	4.976	4.544	4.544	4.544	4.544
Entry Flow, veh/h	55	83	113	80	55	31
Cap Entry Lane, veh/h	1256	1205	1352	1352	1266	1266
Entry HV Adj Factor	0.982	0.976	0.978	0.975	0.974	0.968
Flow Entry, veh/h	54	81	111	78	54	30
Cap Entry, veh/h	1233	1176	1322	1318	1234	1225
V/C Ratio	0.044	0.069	0.084	0.059	0.043	0.024
Control Delay, s/veh	3.3	3.6	3.4	3.2	3.3	3.1
LOS	A	A	A	A	A	A
95th %tile Queue, veh	0	0	0	0	0	0

Intersection	
Int Delay, s/veh	1.6

Movement	EBT	EBR	WBL	WBT	NBL	NBR
Lane Configurations						
Traffic Vol, veh/h	0	0	0	0	0	0
Future Vol, veh/h	80	11	27	179	10	27
Conflicting Peds, #/hr	0	0	0	0	0	0
Sign Control	Free	Free	Free	Free	Stop	Stop
RT Channelized	-	None	-	None	-	None
Storage Length	-	-	150	-	-	150
Veh in Median Storage, #	0	-	-	0	0	-
Grade, %	0	-	-	0	0	-
Peak Hour Factor	100	100	100	100	100	100
Heavy Vehicles, %	2	2	2	2	2	2
Mvmt Flow	80	11	27	179	10	27

Major/Minor	Major1		Major2		Minor1	
Conflicting Flow All	0	0	91	0	230	46
Stage 1	-	-	-	-	86	-
Stage 2	-	-	-	-	144	-
Critical Hdwy	-	-	4.14	-	6.84	6.94
Critical Hdwy Stg 1	-	-	-	-	5.84	-
Critical Hdwy Stg 2	-	-	-	-	5.84	-
Follow-up Hdwy	-	-	2.22	-	3.52	3.32
Pot Cap-1 Maneuver	-	-	1502	-	738	1014
Stage 1	-	-	-	-	927	-
Stage 2	-	-	-	-	868	-
Platoon blocked, %	-	-		-		
Mov Cap-1 Maneuver	-	-	1502	-	725	1014
Mov Cap-2 Maneuver	-	-	-	-	725	-
Stage 1	-	-	-	-	927	-
Stage 2	-	-	-	-	852	-

Approach	EB	WB	NB
HCM Control Delay, s	0	1	9
HCM LOS			A

Minor Lane/Major Mvmt	NBLn1	NBLn2	EBT	EBR	WBL	WBT
Capacity (veh/h)	725	1014	-	-	1502	-
HCM Lane V/C Ratio	0.014	0.027	-	-	0.018	-
HCM Control Delay (s)	10	8.6	-	-	7.4	-
HCM Lane LOS	B	A	-	-	A	-
HCM 95th %tile Q(veh)	0	0.1	-	-	0.1	-

Intersection	
Int Delay, s/veh	7.1

Movement	WBL	WBR	NBT	NBR	SBL	SBT
Lane Configurations						
Traffic Vol, veh/h	0	0	0	0	0	0
Future Vol, veh/h	0	34	3	0	34	4
Conflicting Peds, #/hr	0	0	0	0	0	0
Sign Control	Stop	Stop	Free	Free	Free	Free
RT Channelized	-	None	-	None	-	None
Storage Length	-	-	-	-	-	-
Veh in Median Storage, #	0	-	0	-	-	0
Grade, %	0	-	0	-	-	0
Peak Hour Factor	100	100	100	100	100	100
Heavy Vehicles, %	2	2	2	2	2	2
Mvmt Flow	0	34	3	0	34	4

Major/Minor	Minor1		Major1		Major2	
Conflicting Flow All	75	3	0	0	3	0
Stage 1	3	-	-	-	-	-
Stage 2	72	-	-	-	-	-
Critical Hdwy	6.42	6.22	-	-	4.12	-
Critical Hdwy Stg 1	5.42	-	-	-	-	-
Critical Hdwy Stg 2	5.42	-	-	-	-	-
Follow-up Hdwy	3.518	3.318	-	-	2.218	-
Pot Cap-1 Maneuver	928	1081	-	-	1619	-
Stage 1	1020	-	-	-	-	-
Stage 2	951	-	-	-	-	-
Platoon blocked, %			-	-		-
Mov Cap-1 Maneuver	909	1081	-	-	1619	-
Mov Cap-2 Maneuver	909	-	-	-	-	-
Stage 1	1020	-	-	-	-	-
Stage 2	931	-	-	-	-	-

Approach	WB	NB	SB
HCM Control Delay, s	8.4	0	6.5
HCM LOS	A		

Minor Lane/Major Mvmt	NBT	NBR	WBLn1	SBL	SBT
Capacity (veh/h)	-	-	1081	1619	-
HCM Lane V/C Ratio	-	-	0.031	0.021	-
HCM Control Delay (s)	-	-	8.4	7.3	0
HCM Lane LOS	-	-	A	A	A
HCM 95th %tile Q(veh)	-	-	0.1	0.1	-

Intersection	
Int Delay, s/veh	1.1

Movement	EBL	EBR	NBL	NBT	SBT	SBR
Lane Configurations						
Traffic Vol, veh/h	0	0	0	675	623	0
Future Vol, veh/h	0	144	0	734	661	99
Conflicting Peds, #/hr	0	0	0	0	0	0
Sign Control	Stop	Stop	Free	Free	Free	Free
RT Channelized	-	None	-	None	-	None
Storage Length	-	0	-	-	-	-
Veh in Median Storage, #	0	-	-	0	0	-
Grade, %	0	-	-	0	0	-
Peak Hour Factor	100	100	100	100	100	100
Heavy Vehicles, %	2	2	2	2	2	2
Mvmt Flow	0	144	0	734	661	99

Major/Minor	Minor2		Major1		Major2	
Conflicting Flow All	-	380	-	0	-	0
Stage 1	-	-	-	-	-	-
Stage 2	-	-	-	-	-	-
Critical Hdwy	-	6.94	-	-	-	-
Critical Hdwy Stg 1	-	-	-	-	-	-
Critical Hdwy Stg 2	-	-	-	-	-	-
Follow-up Hdwy	-	3.32	-	-	-	-
Pot Cap-1 Maneuver	0	618	0	-	-	-
Stage 1	0	-	0	-	-	-
Stage 2	0	-	0	-	-	-
Platoon blocked, %				-	-	-
Mov Cap-1 Maneuver	-	618	-	-	-	-
Mov Cap-2 Maneuver	-	-	-	-	-	-
Stage 1	-	-	-	-	-	-
Stage 2	-	-	-	-	-	-

Approach	EB	NB	SB
HCM Control Delay, s	12.6	0	0
HCM LOS	B		

Minor Lane/Major Mvmt	NBT	EBLn1	SBT	SBR
Capacity (veh/h)	-	618	-	-
HCM Lane V/C Ratio	-	0.233	-	-
HCM Control Delay (s)	-	12.6	-	-
HCM Lane LOS	-	B	-	-
HCM 95th %tile Q(veh)	-	0.9	-	-

Intersection	
Int Delay, s/veh	1.1

Movement	EBT	EBR	WBL	WBT	NBL	NBR
Lane Configurations						
Traffic Vol, veh/h	0	0	0	0	0	0
Future Vol, veh/h	64	19	6	62	11	4
Conflicting Peds, #/hr	0	0	0	0	0	0
Sign Control	Free	Free	Free	Free	Stop	Stop
RT Channelized	-	None	-	None	-	None
Storage Length	-	-	-	-	0	-
Veh in Median Storage, #	0	-	-	0	0	-
Grade, %	0	-	-	0	0	-
Peak Hour Factor	100	100	100	100	100	100
Heavy Vehicles, %	2	2	2	2	2	2
Mvmt Flow	64	19	6	62	11	4

Major/Minor	Major1		Major2		Minor1	
Conflicting Flow All	0	0	83	0	148	74
Stage 1	-	-	-	-	74	-
Stage 2	-	-	-	-	74	-
Critical Hdwy	-	-	4.12	-	6.42	6.22
Critical Hdwy Stg 1	-	-	-	-	5.42	-
Critical Hdwy Stg 2	-	-	-	-	5.42	-
Follow-up Hdwy	-	-	2.218	-	3.518	3.318
Pot Cap-1 Maneuver	-	-	1514	-	844	988
Stage 1	-	-	-	-	949	-
Stage 2	-	-	-	-	949	-
Platoon blocked, %	-	-		-		
Mov Cap-1 Maneuver	-	-	1514	-	841	988
Mov Cap-2 Maneuver	-	-	-	-	841	-
Stage 1	-	-	-	-	949	-
Stage 2	-	-	-	-	945	-

Approach	EB	WB	NB
HCM Control Delay, s	0	0.7	9.2
HCM LOS			A

Minor Lane/Major Mvmt	NBLn1	EBT	EBR	WBL	WBT
Capacity (veh/h)	876	-	-	1514	-
HCM Lane V/C Ratio	0.017	-	-	0.004	-
HCM Control Delay (s)	9.2	-	-	7.4	0
HCM Lane LOS	A	-	-	A	A
HCM 95th %tile Q(veh)	0.1	-	-	0	-

Intersection	
Int Delay, s/veh	0.4

Movement	EBL	EBR	NBL	NBT	SBT	SBR
Lane Configurations						
Traffic Vol, veh/h	0	0	0	0	0	0
Future Vol, veh/h	11	0	0	148	84	13
Conflicting Peds, #/hr	0	0	0	0	0	0
Sign Control	Stop	Stop	Free	Free	Free	Free
RT Channelized	-	None	-	None	-	None
Storage Length	0	-	0	-	-	-
Veh in Median Storage, #	0	-	-	0	0	-
Grade, %	0	-	-	0	0	-
Peak Hour Factor	100	100	100	100	100	100
Heavy Vehicles, %	2	2	2	2	2	2
Mvmt Flow	11	0	0	148	84	13

Major/Minor	Minor2		Major1		Major2	
Conflicting Flow All	239	91	97	0	-	0
Stage 1	91	-	-	-	-	-
Stage 2	148	-	-	-	-	-
Critical Hdwy	6.42	6.22	4.12	-	-	-
Critical Hdwy Stg 1	5.42	-	-	-	-	-
Critical Hdwy Stg 2	5.42	-	-	-	-	-
Follow-up Hdwy	3.518	3.318	2.218	-	-	-
Pot Cap-1 Maneuver	749	967	1496	-	-	-
Stage 1	933	-	-	-	-	-
Stage 2	880	-	-	-	-	-
Platoon blocked, %				-	-	-
Mov Cap-1 Maneuver	749	967	1496	-	-	-
Mov Cap-2 Maneuver	749	-	-	-	-	-
Stage 1	933	-	-	-	-	-
Stage 2	880	-	-	-	-	-

Approach	EB	NB	SB
HCM Control Delay, s	9.9	0	0
HCM LOS	A		

Minor Lane/Major Mvmt	NBL	NBT	EBLn1	SBT	SBR
Capacity (veh/h)	1496	-	749	-	-
HCM Lane V/C Ratio	-	-	0.015	-	-
HCM Control Delay (s)	0	-	9.9	-	-
HCM Lane LOS	A	-	A	-	-
HCM 95th %tile Q(veh)	0	-	0	-	-

Intersection	
Int Delay, s/veh	1

Movement	WBL	WBR	NBT	NBR	SBL	SBT
Lane Configurations						
Traffic Vol, veh/h	0	0	0	0	0	0
Future Vol, veh/h	0	11	94	0	13	76
Conflicting Peds, #/hr	0	0	0	0	0	0
Sign Control	Stop	Stop	Free	Free	Free	Free
RT Channelized	-	None	-	None	-	None
Storage Length	0	-	-	-	-	-
Veh in Median Storage, #	0	-	0	-	-	0
Grade, %	0	-	0	-	-	0
Peak Hour Factor	100	100	100	100	100	100
Heavy Vehicles, %	2	2	2	2	2	2
Mvmt Flow	0	11	94	0	13	76

Major/Minor	Minor1		Major1		Major2	
Conflicting Flow All	196	94	0	0	94	0
Stage 1	94	-	-	-	-	-
Stage 2	102	-	-	-	-	-
Critical Hdwy	6.42	6.22	-	-	4.12	-
Critical Hdwy Stg 1	5.42	-	-	-	-	-
Critical Hdwy Stg 2	5.42	-	-	-	-	-
Follow-up Hdwy	3.518	3.318	-	-	2.218	-
Pot Cap-1 Maneuver	793	963	-	-	1500	-
Stage 1	930	-	-	-	-	-
Stage 2	922	-	-	-	-	-
Platoon blocked, %			-	-		-
Mov Cap-1 Maneuver	786	963	-	-	1500	-
Mov Cap-2 Maneuver	786	-	-	-	-	-
Stage 1	930	-	-	-	-	-
Stage 2	914	-	-	-	-	-

Approach	WB	NB	SB
HCM Control Delay, s	8.8	0	1.1
HCM LOS	A		

Minor Lane/Major Mvmt	NBT	NBR	WBLn1	SBL	SBT
Capacity (veh/h)	-	-	963	1500	-
HCM Lane V/C Ratio	-	-	0.011	0.009	-
HCM Control Delay (s)	-	-	8.8	7.4	0
HCM Lane LOS	-	-	A	A	A
HCM 95th %tile Q(veh)	-	-	0	0	-

Lane Group	EBL	EBT	EBR	WBL	WBT	WBR	NBL	NBT	NBR	SBL	SBT	SBR
Lane Group Flow (vph)	91	1145	209	292	698	387	109	241	449	633	325	101
v/c Ratio	0.45	0.88	0.29	0.74	0.63	0.38	0.45	0.26	0.63	0.87	0.23	0.12
Control Delay	61.9	51.1	4.6	62.8	37.8	4.7	59.5	36.1	26.1	58.5	23.8	4.0
Queue Delay	0.0	0.0	0.0	0.0	0.0	0.0	0.0	0.0	0.0	0.0	0.0	0.0
Total Delay	61.9	51.1	4.6	62.8	37.8	4.7	59.5	36.1	26.1	58.5	23.8	4.0
Queue Length 50th (ft)	35	313	0	113	241	35	42	78	217	243	86	2
Queue Length 95th (ft)	63	#373	50	161	306	86	72	116	334	#328	121	31
Internal Link Dist (ft)		664			834			1448			1908	
Turn Bay Length (ft)	225		235				455		455	385		385
Base Capacity (vph)	206	1322	717	421	1142	1031	258	931	726	771	1435	844
Starvation Cap Reductn	0	0	0	0	0	0	0	0	0	0	0	0
Spillback Cap Reductn	0	0	0	0	0	0	0	0	0	0	0	0
Storage Cap Reductn	0	0	0	0	0	0	0	0	0	0	0	0
Reduced v/c Ratio	0.44	0.87	0.29	0.69	0.61	0.38	0.42	0.26	0.62	0.82	0.23	0.12

Intersection Summary

95th percentile volume exceeds capacity, queue may be longer.
Queue shown is maximum after two cycles.

Movement	EBL	EBT	EBR	WBL	WBT	WBR	NBL	NBT	NBR	SBL	SBT	SBR
Lane Configurations												
Traffic Volume (veh/h)	56	1035	121	245	615	356	100	186	390	582	257	52
Future Volume (veh/h)	84	1053	192	269	642	356	100	222	413	582	299	93
Initial Q (Qb), veh	0	0	0	0	0	0	0	0	0	0	0	0
Ped-Bike Adj(A_pbT)	1.00		1.00	1.00		1.00	1.00		1.00	1.00		1.00
Parking Bus, Adj	1.00	1.00	1.00	1.00	1.00	1.00	1.00	1.00	1.00	1.00	1.00	1.00
Work Zone On Approach		No			No			No			No	
Adj Sat Flow, veh/h/ln	1870	1870	1870	1870	1870	1870	1870	1870	1870	1870	1870	1870
Adj Flow Rate, veh/h	91	1145	0	292	698	0	109	241	0	633	325	0
Peak Hour Factor	0.92	0.92	0.92	0.92	0.92	0.92	0.92	0.92	0.92	0.92	0.92	0.92
Percent Heavy Veh, %	2	2	2	2	2	2	2	2	2	2	2	2
Cap, veh/h	145	1323		358	1139		166	962		712	1524	
Arrive On Green	0.04	0.26	0.00	0.10	0.32	0.00	0.05	0.27	0.00	0.21	0.43	0.00
Sat Flow, veh/h	3456	5106	1585	3456	3554	1585	3456	3554	1585	3456	3554	1585
Grp Volume(v), veh/h	91	1145	0	292	698	0	109	241	0	633	325	0
Grp Sat Flow(s),veh/h/ln	1728	1702	1585	1728	1777	1585	1728	1777	1585	1728	1777	1585
Q Serve(g_s), s	2.9	24.0	0.0	9.3	18.6	0.0	3.5	5.9	0.0	19.9	6.4	0.0
Cycle Q Clear(g_c), s	2.9	24.0	0.0	9.3	18.6	0.0	3.5	5.9	0.0	19.9	6.4	0.0
Prop In Lane	1.00		1.00	1.00		1.00	1.00		1.00	1.00		1.00
Lane Grp Cap(c), veh/h	145	1323		358	1139		166	962		712	1524	
V/C Ratio(X)	0.63	0.87		0.82	0.61		0.66	0.25		0.89	0.21	
Avail Cap(c_a), veh/h	219	1401		448	1210		275	962		818	1524	
HCM Platoon Ratio	1.00	1.00	1.00	1.00	1.00	1.00	1.00	1.00	1.00	1.00	1.00	1.00
Upstream Filter(I)	1.00	1.00	0.00	1.00	1.00	0.00	1.00	1.00	0.00	1.00	1.00	0.00
Uniform Delay (d), s/veh	52.7	39.6	0.0	49.1	32.2	0.0	52.4	31.9	0.0	43.2	20.1	0.0
Incr Delay (d2), s/veh	4.4	5.7	0.0	9.2	0.8	0.0	4.4	0.6	0.0	10.8	0.3	0.0
Initial Q Delay(d3),s/veh	0.0	0.0	0.0	0.0	0.0	0.0	0.0	0.0	0.0	0.0	0.0	0.0
%ile BackOfQ(50%),veh/ln	1.3	10.6	0.0	4.4	8.1	0.0	1.6	2.6	0.0	9.5	2.7	0.0
Unsig. Movement Delay, s/veh												
LnGrp Delay(d),s/veh	57.1	45.3	0.0	58.3	33.0	0.0	56.8	32.6	0.0	54.0	20.4	0.0
LnGrp LOS	E	D		E	C		E	C		D	C	
Approach Vol, veh/h		1236	A		990	A		350	A		958	A
Approach Delay, s/veh		46.2			40.5			40.1			42.6	
Approach LOS		D			D			D			D	

Timer - Assigned Phs	1	2	3	4	5	6	7	8
Phs Duration (G+Y+Rc), s	27.6	34.8	16.1	33.5	9.9	52.5	9.2	40.4
Change Period (Y+Rc), s	4.5	4.5	4.5	4.5	4.5	4.5	4.5	4.5
Max Green Setting (Gmax), s	26.5	30.3	14.5	30.7	8.9	47.9	7.1	38.1
Max Q Clear Time (g_c+I1), s	21.9	7.9	11.3	26.0	5.5	8.4	4.9	20.6
Green Ext Time (p_c), s	1.1	1.5	0.3	3.0	0.1	2.3	0.0	4.6

Intersection Summary	
HCM 6th Ctrl Delay	43.0
HCM 6th LOS	D

Notes

User approved pedestrian interval to be less than phase max green.

Unsignalized Delay for [NBR, EBR, WBR, SBR] is excluded from calculations of the approach delay and intersection delay.

Lane Group	EBL	EBT	EBR	WBL	WBT	WBR	NBL	NBT	SBL	SBT
Lane Group Flow (vph)	393	870	54	11	615	143	32	11	104	296
v/c Ratio	0.73	0.36	0.05	0.03	0.25	0.13	0.27	0.04	0.44	0.63
Control Delay	18.9	5.1	1.7	4.6	4.5	1.3	28.0	15.1	29.2	12.3
Queue Delay	0.0	0.0	0.0	0.0	0.0	0.0	0.0	0.0	0.0	0.0
Total Delay	18.9	5.1	1.7	4.6	4.5	1.3	28.0	15.1	29.2	12.3
Queue Length 50th (ft)	71	54	0	1	34	0	11	1	36	17
Queue Length 95th (ft)	#291	116	11	7	77	17	32	12	76	78
Internal Link Dist (ft)		2031			726			424		524
Turn Bay Length (ft)	485		275	235		275	235		235	
Base Capacity (vph)	536	2433	1105	396	2433	1133	319	763	629	849
Starvation Cap Reductn	0	0	0	0	0	0	0	0	0	0
Spillback Cap Reductn	0	0	0	0	0	0	0	0	0	0
Storage Cap Reductn	0	0	0	0	0	0	0	0	0	0
Reduced v/c Ratio	0.73	0.36	0.05	0.03	0.25	0.13	0.10	0.01	0.17	0.35

Intersection Summary

95th percentile volume exceeds capacity, queue may be longer.
Queue shown is maximum after two cycles.

Movement	EBL	EBT	EBR	WBL	WBT	WBR	NBL	NBT	NBR	SBL	SBT	SBR
Lane Configurations												
Traffic Volume (veh/h)	288	683	50	10	412	112	29	4	6	80	4	209
Future Volume (veh/h)	362	800	50	10	566	132	29	4	6	96	4	269
Initial Q (Qb), veh	0	0	0	0	0	0	0	0	0	0	0	0
Ped-Bike Adj(A_pbT)	1.00		1.00	1.00		1.00	1.00		1.00	1.00		1.00
Parking Bus, Adj	1.00	1.00	1.00	1.00	1.00	1.00	1.00	1.00	1.00	1.00	1.00	1.00
Work Zone On Approach		No			No			No			No	
Adj Sat Flow, veh/h/ln	1870	1870	1870	1870	1870	1870	1870	1870	1870	1870	1870	1870
Adj Flow Rate, veh/h	393	870	54	11	615	143	32	4	7	104	4	292
Peak Hour Factor	0.92	0.92	0.92	0.92	0.92	0.92	0.92	0.92	0.92	0.92	0.92	0.92
Percent Heavy Veh, %	2	2	2	2	2	2	2	2	2	2	2	2
Cap, veh/h	499	2248	1003	417	2248	1003	170	143	250	428	5	368
Arrive On Green	0.63	0.63	0.63	0.63	0.63	0.63	0.23	0.23	0.23	0.23	0.23	0.23
Sat Flow, veh/h	707	3554	1585	605	3554	1585	1083	610	1068	1404	21	1567
Grp Volume(v), veh/h	393	870	54	11	615	143	32	0	11	104	0	296
Grp Sat Flow(s),veh/h/ln	707	1777	1585	605	1777	1585	1083	0	1678	1404	0	1588
Q Serve(g_s), s	37.7	8.1	0.9	0.6	5.2	2.5	1.9	0.0	0.3	4.2	0.0	11.9
Cycle Q Clear(g_c), s	42.9	8.1	0.9	8.7	5.2	2.5	13.8	0.0	0.3	4.5	0.0	11.9
Prop In Lane	1.00		1.00	1.00		1.00	1.00		0.64	1.00		0.99
Lane Grp Cap(c), veh/h	499	2248	1003	417	2248	1003	170	0	394	428	0	373
V/C Ratio(X)	0.79	0.39	0.05	0.03	0.27	0.14	0.19	0.00	0.03	0.24	0.00	0.79
Avail Cap(c_a), veh/h	499	2248	1003	417	2248	1003	365	0	695	681	0	658
HCM Platoon Ratio	1.00	1.00	1.00	1.00	1.00	1.00	1.00	1.00	1.00	1.00	1.00	1.00
Upstream Filter(I)	1.00	1.00	1.00	1.00	1.00	1.00	1.00	0.00	1.00	1.00	0.00	1.00
Uniform Delay (d), s/veh	15.1	6.1	4.7	8.2	5.5	5.0	30.9	0.0	20.0	21.7	0.0	24.4
Incr Delay (d2), s/veh	8.2	0.1	0.0	0.0	0.1	0.1	0.5	0.0	0.0	0.3	0.0	3.9
Initial Q Delay(d3),s/veh	0.0	0.0	0.0	0.0	0.0	0.0	0.0	0.0	0.0	0.0	0.0	0.0
%ile BackOfQ(50%),veh/ln	6.0	2.4	0.2	0.1	1.5	0.7	0.5	0.0	0.1	1.3	0.0	4.6
Unsig. Movement Delay, s/veh												
LnGrp Delay(d),s/veh	23.3	6.2	4.8	8.2	5.6	5.1	31.4	0.0	20.0	22.0	0.0	28.3
LnGrp LOS	C	A	A	A	A	A	C	A	C	C	A	C
Approach Vol, veh/h		1317			769			43			400	
Approach Delay, s/veh		11.2			5.5			28.5			26.7	
Approach LOS		B			A			C			C	

Timer - Assigned Phs	2	4	6	8
Phs Duration (G+Y+Rc), s	20.4	47.4	20.4	47.4
Change Period (Y+Rc), s	4.5	4.5	4.5	4.5
Max Green Setting (Gmax), s	28.1	42.9	28.1	42.9
Max Q Clear Time (g_c+I1), s	15.8	44.9	13.9	10.7
Green Ext Time (p_c), s	0.1	0.0	1.9	5.4

Intersection Summary	
HCM 6th Ctrl Delay	12.2
HCM 6th LOS	B

Appendix F

2040 BACKGROUND TRAFFIC LEVEL OF SERVICE OUTPUT

Lane Group	EBL	EBT	EBR	WBL	WBT	WBR	NBL	NBT	NBR	SBL	SBT	SBR
Lane Group Flow (vph)	182	80	15	217	120	60	48	550	45	91	517	57
v/c Ratio	0.60	0.20	0.05	0.69	0.28	0.20	0.09	0.33	0.06	0.18	0.29	0.07
Control Delay	29.0	27.9	0.4	33.4	28.5	2.4	6.8	12.9	0.1	7.2	11.2	0.4
Queue Delay	0.0	0.0	0.0	0.0	0.0	0.0	0.0	0.0	0.0	0.0	0.0	0.0
Total Delay	29.0	27.9	0.4	33.4	28.5	2.4	6.8	12.9	0.1	7.2	11.2	0.4
Queue Length 50th (ft)	59	15	0	72	23	0	7	75	0	14	68	0
Queue Length 95th (ft)	109	34	0	#135	46	6	20	116	0	33	105	3
Internal Link Dist (ft)		911			760			1157			1874	
Turn Bay Length (ft)	235		450	200		400	700		600			490
Base Capacity (vph)	305	2097	987	314	2119	996	530	1664	808	514	1809	868
Starvation Cap Reductn	0	0	0	0	0	0	0	0	0	0	0	0
Spillback Cap Reductn	0	0	0	0	0	0	0	0	0	0	0	0
Storage Cap Reductn	0	0	0	0	0	0	0	0	0	0	0	0
Reduced v/c Ratio	0.60	0.04	0.02	0.69	0.06	0.06	0.09	0.33	0.06	0.18	0.29	0.07

Intersection Summary

95th percentile volume exceeds capacity, queue may be longer.
Queue shown is maximum after two cycles.

Movement	EBL	EBT	EBR	WBL	WBT	WBR	NBL	NBT	NBR	SBL	SBT	SBR
Lane Configurations												
Traffic Volume (veh/h)	167	74	14	200	110	55	44	506	41	84	476	52
Future Volume (veh/h)	167	74	14	200	110	55	44	506	41	84	476	52
Initial Q (Qb), veh	0	0	0	0	0	0	0	0	0	0	0	0
Ped-Bike Adj(A_pbT)	1.00		1.00	1.00		1.00	1.00		1.00	1.00		1.00
Parking Bus, Adj	1.00	1.00	1.00	1.00	1.00	1.00	1.00	1.00	1.00	1.00	1.00	1.00
Work Zone On Approach		No			No			No			No	
Adj Sat Flow, veh/h/ln	1870	1870	1870	1870	1870	1870	1870	1870	1870	1870	1870	1870
Adj Flow Rate, veh/h	182	80	0	217	120	0	48	550	0	91	517	0
Peak Hour Factor	0.92	0.92	0.92	0.92	0.92	0.92	0.92	0.92	0.92	0.92	0.92	0.92
Percent Heavy Veh, %	2	2	2	2	2	2	2	2	2	2	2	2
Cap, veh/h	368	286		387	309		538	1623		536	1689	
Arrive On Green	0.10	0.08	0.00	0.11	0.09	0.00	0.05	0.46	0.00	0.06	0.48	0.00
Sat Flow, veh/h	1781	3554	1585	1781	3554	1585	1781	3554	1585	1781	3554	1585
Grp Volume(v), veh/h	182	80	0	217	120	0	48	550	0	91	517	0
Grp Sat Flow(s),veh/h/ln	1781	1777	1585	1781	1777	1585	1781	1777	1585	1781	1777	1585
Q Serve(g_s), s	5.8	1.3	0.0	6.7	2.0	0.0	0.9	6.2	0.0	1.6	5.5	0.0
Cycle Q Clear(g_c), s	5.8	1.3	0.0	6.7	2.0	0.0	0.9	6.2	0.0	1.6	5.5	0.0
Prop In Lane	1.00		1.00	1.00		1.00	1.00		1.00	1.00		1.00
Lane Grp Cap(c), veh/h	368	286		387	309		538	1623		536	1689	
V/C Ratio(X)	0.50	0.28		0.56	0.39		0.09	0.34		0.17	0.31	
Avail Cap(c_a), veh/h	368	2065		387	2088		601	1623		595	1689	
HCM Platoon Ratio	1.00	1.00	1.00	1.00	1.00	1.00	1.00	1.00	1.00	1.00	1.00	1.00
Upstream Filter(I)	1.00	1.00	0.00	1.00	1.00	0.00	1.00	1.00	0.00	1.00	1.00	0.00
Uniform Delay (d), s/veh	23.1	26.8	0.0	23.3	26.7	0.0	8.1	10.8	0.0	7.8	10.0	0.0
Incr Delay (d2), s/veh	1.0	0.5	0.0	1.8	0.8	0.0	0.1	0.6	0.0	0.1	0.5	0.0
Initial Q Delay(d3),s/veh	0.0	0.0	0.0	0.0	0.0	0.0	0.0	0.0	0.0	0.0	0.0	0.0
%ile BackOfQ(50%),veh/ln	2.4	0.5	0.0	2.9	0.8	0.0	0.3	2.2	0.0	0.5	2.0	0.0
Unsig. Movement Delay, s/veh												
LnGrp Delay(d),s/veh	24.1	27.3	0.0	25.1	27.5	0.0	8.1	11.4	0.0	8.0	10.4	0.0
LnGrp LOS	C	C		C	C		A	B		A	B	
Approach Vol, veh/h		262	A		337	A		598	A		608	A
Approach Delay, s/veh		25.1			26.0			11.1			10.1	
Approach LOS		C			C			B			B	

Timer - Assigned Phs	1	2	3	4	5	6	7	8
Phs Duration (G+Y+Rc), s	8.5	32.8	11.2	9.5	7.3	33.9	10.8	9.9
Change Period (Y+Rc), s	4.5	4.5	4.5	4.5	4.5	4.5	4.5	4.5
Max Green Setting (Gmax), s	6.0	28.3	6.7	36.0	5.0	29.3	6.3	36.4
Max Q Clear Time (g_c+I1), s	3.6	8.2	8.7	3.3	2.9	7.5	7.8	4.0
Green Ext Time (p_c), s	0.0	3.7	0.0	0.5	0.0	3.5	0.0	0.7

Intersection Summary	
HCM 6th Ctrl Delay	15.6
HCM 6th LOS	B

Notes

Unsignalized Delay for [NBR, EBR, WBR, SBR] is excluded from calculations of the approach delay and intersection delay.

Intersection	
Int Delay, s/veh	0.5

Movement	EBT	EBR	WBL	WBT	NBL	NBR
Lane Configurations						
Traffic Vol, veh/h	161	13	2	315	19	3
Future Vol, veh/h	161	13	2	315	19	3
Conflicting Peds, #/hr	0	0	0	0	0	0
Sign Control	Free	Free	Free	Free	Stop	Stop
RT Channelized	-	None	-	None	-	None
Storage Length	-	235	235	-	0	-
Veh in Median Storage, #	0	-	-	0	0	-
Grade, %	0	-	-	0	0	-
Peak Hour Factor	92	92	92	92	92	92
Heavy Vehicles, %	2	2	2	2	2	2
Mvmt Flow	175	14	2	342	21	3

Major/Minor	Major1		Major2		Minor1	
Conflicting Flow All	0	0	189	0	350	88
Stage 1	-	-	-	-	175	-
Stage 2	-	-	-	-	175	-
Critical Hdwy	-	-	4.14	-	6.84	6.94
Critical Hdwy Stg 1	-	-	-	-	5.84	-
Critical Hdwy Stg 2	-	-	-	-	5.84	-
Follow-up Hdwy	-	-	2.22	-	3.52	3.32
Pot Cap-1 Maneuver	-	-	1382	-	621	953
Stage 1	-	-	-	-	838	-
Stage 2	-	-	-	-	838	-
Platoon blocked, %	-	-		-		
Mov Cap-1 Maneuver	-	-	1382	-	620	953
Mov Cap-2 Maneuver	-	-	-	-	620	-
Stage 1	-	-	-	-	838	-
Stage 2	-	-	-	-	837	-

Approach	EB	WB	NB
HCM Control Delay, s	0	0	10.7
HCM LOS			B

Minor Lane/Major Mvmt	NBLn1	EBT	EBR	WBL	WBT
Capacity (veh/h)	651	-	-	1382	-
HCM Lane V/C Ratio	0.037	-	-	0.002	-
HCM Control Delay (s)	10.7	-	-	7.6	-
HCM Lane LOS	B	-	-	A	-
HCM 95th %tile Q(veh)	0.1	-	-	0	-

Lane Group	EBL	EBT	EBR	WBL	WBT	WBR	NBL	NBT	NBR	SBL	SBT	SBR
Lane Group Flow (vph)	41	424	55	425	1195	633	178	588	174	250	565	49
v/c Ratio	0.23	0.48	0.11	0.80	0.85	0.76	0.54	0.55	0.29	0.71	0.52	0.08
Control Delay	48.4	32.1	0.4	51.5	33.8	18.5	48.4	31.2	5.8	54.8	30.4	0.3
Queue Delay	0.0	0.0	0.0	0.0	0.0	0.0	0.0	0.0	0.0	0.0	0.0	0.0
Total Delay	48.4	32.1	0.4	51.5	33.8	18.5	48.4	31.2	5.8	54.8	30.4	0.3
Queue Length 50th (ft)	13	116	0	136	365	166	56	168	0	80	161	0
Queue Length 95th (ft)	30	162	0	#204	#468	323	91	225	49	#134	216	0
Internal Link Dist (ft)		664			834			2595			1908	
Turn Bay Length (ft)	225		100				455		455	385		385
Base Capacity (vph)	180	1045	583	565	1441	845	358	1064	597	358	1085	599
Starvation Cap Reductn	0	0	0	0	0	0	0	0	0	0	0	0
Spillback Cap Reductn	0	0	0	0	0	0	0	0	0	0	0	0
Storage Cap Reductn	0	0	0	0	0	0	0	0	0	0	0	0
Reduced v/c Ratio	0.23	0.41	0.09	0.75	0.83	0.75	0.50	0.55	0.29	0.70	0.52	0.08

Intersection Summary

95th percentile volume exceeds capacity, queue may be longer.
Queue shown is maximum after two cycles.

Movement	EBL	EBT	EBR	WBL	WBT	WBR	NBL	NBT	NBR	SBL	SBT	SBR
Lane Configurations												
Traffic Volume (veh/h)	38	390	51	391	1099	582	164	541	160	230	520	45
Future Volume (veh/h)	38	390	51	391	1099	582	164	541	160	230	520	45
Initial Q (Qb), veh	0	0	0	0	0	0	0	0	0	0	0	0
Ped-Bike Adj(A_pbT)	1.00		1.00	1.00		1.00	1.00		1.00	1.00		1.00
Parking Bus, Adj	1.00	1.00	1.00	1.00	1.00	1.00	1.00	1.00	1.00	1.00	1.00	1.00
Work Zone On Approach		No			No			No			No	
Adj Sat Flow, veh/h/ln	1870	1870	1870	1870	1870	1870	1870	1870	1870	1870	1870	1870
Adj Flow Rate, veh/h	41	424	0	425	1195	0	178	588	0	250	565	0
Peak Hour Factor	0.92	0.92	0.92	0.92	0.92	0.92	0.92	0.92	0.92	0.92	0.92	0.92
Percent Heavy Veh, %	2	2	2	2	2	2	2	2	2	2	2	2
Cap, veh/h	120	961		502	1353		251	1070		321	1143	
Arrive On Green	0.03	0.27	0.00	0.15	0.38	0.00	0.07	0.30	0.00	0.09	0.32	0.00
Sat Flow, veh/h	3456	3554	1585	3456	3554	1585	3456	3554	1585	3456	3554	1585
Grp Volume(v), veh/h	41	424	0	425	1195	0	178	588	0	250	565	0
Grp Sat Flow(s),veh/h/ln	1728	1777	1585	1728	1777	1585	1728	1777	1585	1728	1777	1585
Q Serve(g_s), s	1.1	9.4	0.0	11.3	29.7	0.0	4.8	13.1	0.0	6.7	12.1	0.0
Cycle Q Clear(g_c), s	1.1	9.4	0.0	11.3	29.7	0.0	4.8	13.1	0.0	6.7	12.1	0.0
Prop In Lane	1.00		1.00	1.00		1.00	1.00		1.00	1.00		1.00
Lane Grp Cap(c), veh/h	120	961		502	1353		251	1070		321	1143	
V/C Ratio(X)	0.34	0.44		0.85	0.88		0.71	0.55		0.78	0.49	
Avail Cap(c_a), veh/h	183	1052		570	1450		362	1070		362	1143	
HCM Platoon Ratio	1.00	1.00	1.00	1.00	1.00	1.00	1.00	1.00	1.00	1.00	1.00	1.00
Upstream Filter(I)	1.00	1.00	0.00	1.00	1.00	0.00	1.00	1.00	0.00	1.00	1.00	0.00
Uniform Delay (d), s/veh	44.6	28.6	0.0	39.4	27.3	0.0	42.9	27.7	0.0	42.0	25.9	0.0
Incr Delay (d2), s/veh	1.7	0.3	0.0	10.4	6.5	0.0	3.7	2.0	0.0	9.3	1.5	0.0
Initial Q Delay(d3),s/veh	0.0	0.0	0.0	0.0	0.0	0.0	0.0	0.0	0.0	0.0	0.0	0.0
%ile BackOfQ(50%),veh/ln	0.5	4.0	0.0	5.5	13.3	0.0	2.1	5.8	0.0	3.2	5.3	0.0
Unsig. Movement Delay, s/veh												
LnGrp Delay(d),s/veh	46.3	28.9	0.0	49.8	33.8	0.0	46.6	29.7	0.0	51.3	27.4	0.0
LnGrp LOS	D	C		D	C		D	C		D	C	
Approach Vol, veh/h		465	A		1620	A		766	A		815	A
Approach Delay, s/veh		30.4			38.0			33.6			34.7	
Approach LOS		C			D			C			C	

Timer - Assigned Phs	1	2	3	4	5	6	7	8
Phs Duration (G+Y+Rc), s	13.3	33.0	18.2	30.1	11.4	34.9	7.8	40.5
Change Period (Y+Rc), s	4.5	4.5	4.5	4.5	4.5	4.5	4.5	4.5
Max Green Setting (Gmax), s	9.9	28.5	15.6	28.0	9.9	28.5	5.0	38.6
Max Q Clear Time (g_c+I1), s	8.7	15.1	13.3	11.4	6.8	14.1	3.1	31.7
Green Ext Time (p_c), s	0.1	3.3	0.4	2.5	0.2	3.3	0.0	4.4

Intersection Summary	
HCM 6th Ctrl Delay	35.4
HCM 6th LOS	D

Notes

Unsignalized Delay for [NBR, EBR, WBR, SBR] is excluded from calculations of the approach delay and intersection delay.

Lane Group	WBL	WBR	NBT	NBR	SBL	SBT
Lane Group Flow (vph)	435	164	776	139	38	1008
v/c Ratio	0.45	0.33	0.46	0.17	0.13	0.60
Control Delay	13.7	9.5	7.8	2.1	7.3	9.2
Queue Delay	0.0	0.0	0.0	0.0	0.0	0.0
Total Delay	13.7	9.5	7.8	2.1	7.3	9.2
Queue Length 50th (ft)	39	15	49	0	4	69
Queue Length 95th (ft)	76	52	96	19	17	134
Internal Link Dist (ft)	814		2717			2595
Turn Bay Length (ft)	250			250	400	
Base Capacity (vph)	2584	1209	2188	1031	383	2188
Starvation Cap Reductn	0	0	0	0	0	0
Spillback Cap Reductn	0	0	0	0	0	0
Storage Cap Reductn	0	0	0	0	0	0
Reduced v/c Ratio	0.17	0.14	0.35	0.13	0.10	0.46

Intersection Summary

Movement	WBL	WBR	NBT	NBR	SBL	SBT
Lane Configurations						
Traffic Volume (veh/h)	400	151	714	128	35	927
Future Volume (veh/h)	400	151	714	128	35	927
Initial Q (Qb), veh	0	0	0	0	0	0
Ped-Bike Adj(A_pbT)	1.00	1.00		1.00	1.00	
Parking Bus, Adj	1.00	1.00	1.00	1.00	1.00	1.00
Work Zone On Approach	No		No			No
Adj Sat Flow, veh/h/ln	1870	1870	1870	1870	1870	1870
Adj Flow Rate, veh/h	435	164	776	139	38	1008
Peak Hour Factor	0.92	0.92	0.92	0.92	0.92	0.92
Percent Heavy Veh, %	2	2	2	2	2	2
Cap, veh/h	827	379	1693	755	429	1693
Arrive On Green	0.24	0.24	0.48	0.48	0.48	0.48
Sat Flow, veh/h	3456	1585	3647	1585	610	3647
Grp Volume(v), veh/h	435	164	776	139	38	1008
Grp Sat Flow(s),veh/h/ln	1728	1585	1777	1585	610	1777
Q Serve(g_s), s	3.5	2.8	4.6	1.6	1.4	6.6
Cycle Q Clear(g_c), s	3.5	2.8	4.6	1.6	6.0	6.6
Prop In Lane	1.00	1.00		1.00	1.00	
Lane Grp Cap(c), veh/h	827	379	1693	755	429	1693
V/C Ratio(X)	0.53	0.43	0.46	0.18	0.09	0.60
Avail Cap(c_a), veh/h	3057	1402	2582	1152	582	2582
HCM Platoon Ratio	1.00	1.00	1.00	1.00	1.00	1.00
Upstream Filter(I)	1.00	1.00	1.00	1.00	1.00	1.00
Uniform Delay (d), s/veh	10.5	10.2	5.5	4.8	7.6	6.1
Incr Delay (d2), s/veh	0.5	0.8	0.2	0.1	0.1	0.3
Initial Q Delay(d3),s/veh	0.0	0.0	0.0	0.0	0.0	0.0
%ile BackOfQ(50%),veh/ln	1.0	0.8	0.9	0.3	0.1	1.3
Unsig. Movement Delay, s/veh						
LnGrp Delay(d),s/veh	11.0	11.0	5.7	4.9	7.7	6.4
LnGrp LOS	B	B	A	A	A	A
Approach Vol, veh/h	599		915			1046
Approach Delay, s/veh	11.0		5.6			6.4
Approach LOS	B		A			A

Timer - Assigned Phs		2				6	8
Phs Duration (G+Y+Rc), s		19.6				19.6	12.1
Change Period (Y+Rc), s		4.5				4.5	4.5
Max Green Setting (Gmax), s		23.0				23.0	28.0
Max Q Clear Time (g_c+I1), s		6.6				8.6	5.5
Green Ext Time (p_c), s		5.4				6.5	2.1

Intersection Summary	
HCM 6th Ctrl Delay	7.2
HCM 6th LOS	A

Lane Group	EBL	EBT	EBR	WBL	WBT	WBR	NBL	NBT	NBR	SBL	SBT	SBR
Lane Group Flow (vph)	216	220	60	136	408	136	138	383	27	28	223	493
v/c Ratio	0.59	0.16	0.09	0.31	0.30	0.20	0.34	0.31	0.05	0.08	0.18	0.65
Control Delay	18.4	9.0	3.8	11.9	9.6	3.2	13.2	10.4	5.0	10.5	9.8	8.7
Queue Delay	0.0	0.0	0.0	0.0	0.0	0.0	0.0	0.0	0.0	0.0	0.0	0.0
Total Delay	18.4	9.0	3.8	11.9	9.6	3.2	13.2	10.4	5.0	10.5	9.8	8.7
Queue Length 50th (ft)	30	13	0	16	25	0	19	26	0	3	14	23
Queue Length 95th (ft)	123	45	18	69	80	27	70	75	12	20	46	118
Internal Link Dist (ft)		726			925			690			2070	
Turn Bay Length (ft)	300		275	300		275	300		275	300		500
Base Capacity (vph)	727	2697	1221	872	2697	1239	869	2697	1213	745	2697	1282
Starvation Cap Reductn	0	0	0	0	0	0	0	0	0	0	0	0
Spillback Cap Reductn	0	0	0	0	0	0	0	0	0	0	0	0
Storage Cap Reductn	0	0	0	0	0	0	0	0	0	0	0	0
Reduced v/c Ratio	0.30	0.08	0.05	0.16	0.15	0.11	0.16	0.14	0.02	0.04	0.08	0.38

Intersection Summary

Movement	EBL	EBT	EBR	WBL	WBT	WBR	NBL	NBT	NBR	SBL	SBT	SBR
Lane Configurations												
Traffic Volume (veh/h)	199	202	55	125	375	125	127	352	25	26	205	454
Future Volume (veh/h)	199	202	55	125	375	125	127	352	25	26	205	454
Initial Q (Qb), veh	0	0	0	0	0	0	0	0	0	0	0	0
Ped-Bike Adj(A_pbT)	1.00		1.00	1.00		1.00	1.00		1.00	1.00		1.00
Parking Bus, Adj	1.00	1.00	1.00	1.00	1.00	1.00	1.00	1.00	1.00	1.00	1.00	1.00
Work Zone On Approach		No			No			No			No	
Adj Sat Flow, veh/h/ln	1870	1870	1870	1870	1870	1870	1870	1870	1870	1870	1870	1870
Adj Flow Rate, veh/h	216	220	60	136	408	136	138	383	27	28	223	493
Peak Hour Factor	0.92	0.92	0.92	0.92	0.92	0.92	0.92	0.92	0.92	0.92	0.92	0.92
Percent Heavy Veh, %	2	2	2	2	2	2	2	2	2	2	2	2
Cap, veh/h	446	1433	639	565	1433	639	422	1387	619	474	1387	619
Arrive On Green	0.40	0.40	0.40	0.40	0.40	0.40	0.39	0.39	0.39	0.39	0.39	0.39
Sat Flow, veh/h	862	3554	1585	1099	3554	1585	735	3554	1585	976	3554	1585
Grp Volume(v), veh/h	216	220	60	136	408	136	138	383	27	28	223	493
Grp Sat Flow(s),veh/h/ln	862	1777	1585	1099	1777	1585	735	1777	1585	976	1777	1585
Q Serve(g_s), s	9.8	1.7	1.0	3.9	3.4	2.4	6.6	3.2	0.5	0.9	1.8	12.0
Cycle Q Clear(g_c), s	13.2	1.7	1.0	5.6	3.4	2.4	8.3	3.2	0.5	4.1	1.8	12.0
Prop In Lane	1.00		1.00	1.00		1.00	1.00		1.00	1.00		1.00
Lane Grp Cap(c), veh/h	446	1433	639	565	1433	639	422	1387	619	474	1387	619
V/C Ratio(X)	0.48	0.15	0.09	0.24	0.28	0.21	0.33	0.28	0.04	0.06	0.16	0.80
Avail Cap(c_a), veh/h	652	2280	1017	827	2280	1017	607	2280	1017	719	2280	1017
HCM Platoon Ratio	1.00	1.00	1.00	1.00	1.00	1.00	1.00	1.00	1.00	1.00	1.00	1.00
Upstream Filter(I)	1.00	1.00	1.00	1.00	1.00	1.00	1.00	1.00	1.00	1.00	1.00	1.00
Uniform Delay (d), s/veh	13.2	8.3	8.1	10.1	8.8	8.5	11.4	9.1	8.2	10.5	8.7	11.8
Incr Delay (d2), s/veh	0.8	0.0	0.1	0.2	0.1	0.2	0.4	0.1	0.0	0.1	0.1	2.4
Initial Q Delay(d3),s/veh	0.0	0.0	0.0	0.0	0.0	0.0	0.0	0.0	0.0	0.0	0.0	0.0
%ile BackOfQ(50%),veh/ln	1.6	0.5	0.3	0.8	1.0	0.7	0.9	1.0	0.1	0.2	0.5	3.6
Unsig. Movement Delay, s/veh												
LnGrp Delay(d),s/veh	14.0	8.3	8.1	10.3	8.9	8.7	11.8	9.2	8.3	10.5	8.7	14.2
LnGrp LOS	B	A	A	B	A	A	B	A	A	B	A	B
Approach Vol, veh/h		496			680			548			744	
Approach Delay, s/veh		10.8			9.1			9.8			12.4	
Approach LOS		B			A			A			B	

Timer - Assigned Phs	2	4	6	8
Phs Duration (G+Y+Rc), s	21.5	22.1	21.5	22.1
Change Period (Y+Rc), s	4.5	4.5	4.5	4.5
Max Green Setting (Gmax), s	28.0	28.0	28.0	28.0
Max Q Clear Time (g_c+I1), s	10.3	15.2	14.0	7.6
Green Ext Time (p_c), s	3.4	2.4	3.0	3.7

Intersection Summary	
HCM 6th Ctrl Delay	10.6
HCM 6th LOS	B

Lane Group	EBL	EBT	EBR	WBL	WBT	WBR	NBT	NBR	SBT	SBR
Lane Group Flow (vph)	126	399	21	4	990	43	63	13	86	322
v/c Ratio	0.60	0.23	0.03	0.01	0.56	0.05	0.16	0.03	0.22	0.62
Control Delay	25.5	7.8	3.8	7.8	10.4	3.3	15.0	4.5	15.7	18.4
Queue Delay	0.0	0.0	0.0	0.0	0.0	0.0	0.0	0.0	0.0	0.0
Total Delay	25.5	7.8	3.8	7.8	10.4	3.3	15.0	4.5	15.7	18.4
Queue Length 50th (ft)	22	28	0	1	87	0	14	0	19	64
Queue Length 95th (ft)	#113	69	9	5	190	14	39	7	51	147
Internal Link Dist (ft)		2031			726		424		476	
Turn Bay Length (ft)	485		275	235		275				
Base Capacity (vph)	302	2514	1131	684	2514	1137	871	1031	858	1045
Starvation Cap Reductn	0	0	0	0	0	0	0	0	0	0
Spillback Cap Reductn	0	0	0	0	0	0	0	0	0	0
Storage Cap Reductn	0	0	0	0	0	0	0	0	0	0
Reduced v/c Ratio	0.42	0.16	0.02	0.01	0.39	0.04	0.07	0.01	0.10	0.31

Intersection Summary

95th percentile volume exceeds capacity, queue may be longer.
Queue shown is maximum after two cycles.

Movement	EBL	EBT	EBR	WBL	WBT	WBR	NBL	NBT	NBR	SBL	SBT	SBR
Lane Configurations												
Traffic Volume (veh/h)	116	367	19	4	911	40	56	2	12	77	2	296
Future Volume (veh/h)	116	367	19	4	911	40	56	2	12	77	2	296
Initial Q (Qb), veh	0	0	0	0	0	0	0	0	0	0	0	0
Ped-Bike Adj(A_pbT)	1.00		1.00	1.00		1.00	1.00		1.00	1.00		1.00
Parking Bus, Adj	1.00	1.00	1.00	1.00	1.00	1.00	1.00	1.00	1.00	1.00	1.00	1.00
Work Zone On Approach		No			No			No			No	
Adj Sat Flow, veh/h/ln	1870	1870	1870	1870	1870	1870	1870	1870	1870	1870	1870	1870
Adj Flow Rate, veh/h	126	399	21	4	990	43	61	2	13	84	2	322
Peak Hour Factor	0.92	0.92	0.92	0.92	0.92	0.92	0.92	0.92	0.92	0.92	0.92	0.92
Percent Heavy Veh, %	2	2	2	2	2	2	2	2	2	2	2	2
Cap, veh/h	242	1643	733	485	1643	733	102	2	648	102	1	648
Arrive On Green	0.46	0.46	0.46	0.46	0.46	0.46	0.41	0.41	0.41	0.41	0.41	0.41
Sat Flow, veh/h	546	3554	1585	967	3554	1585	0	4	1585	0	3	1585
Grp Volume(v), veh/h	126	399	21	4	990	43	63	0	13	86	0	322
Grp Sat Flow(s),veh/h/ln	546	1777	1585	967	1777	1585	4	0	1585	3	0	1585
Q Serve(g_s), s	15.6	4.7	0.5	0.2	14.5	1.0	0.0	0.0	0.3	0.0	0.0	10.5
Cycle Q Clear(g_c), s	30.1	4.7	0.5	4.9	14.5	1.0	28.5	0.0	0.3	28.5	0.0	10.5
Prop In Lane	1.00		1.00	1.00		1.00	0.97		1.00	0.98		1.00
Lane Grp Cap(c), veh/h	242	1643	733	485	1643	733	103	0	648	103	0	648
V/C Ratio(X)	0.52	0.24	0.03	0.01	0.60	0.06	0.61	0.00	0.02	0.83	0.00	0.50
Avail Cap(c_a), veh/h	244	1656	739	488	1656	739	103	0	648	103	0	648
HCM Platoon Ratio	1.00	1.00	1.00	1.00	1.00	1.00	1.00	1.00	1.00	1.00	1.00	1.00
Upstream Filter(I)	1.00	1.00	1.00	1.00	1.00	1.00	1.00	0.00	1.00	1.00	0.00	1.00
Uniform Delay (d), s/veh	25.2	11.4	10.2	12.8	14.0	10.4	34.1	0.0	12.3	34.5	0.0	15.3
Incr Delay (d2), s/veh	1.9	0.1	0.0	0.0	0.6	0.0	10.0	0.0	0.0	41.2	0.0	0.6
Initial Q Delay(d3),s/veh	0.0	0.0	0.0	0.0	0.0	0.0	0.0	0.0	0.0	0.0	0.0	0.0
%ile BackOfQ(50%),veh/ln	2.0	1.7	0.2	0.0	5.3	0.3	1.3	0.0	0.1	2.6	0.0	3.6
Unsig. Movement Delay, s/veh												
LnGrp Delay(d),s/veh	27.1	11.4	10.2	12.8	14.6	10.4	44.0	0.0	12.3	75.6	0.0	15.9
LnGrp LOS	C	B	B	B	B	B	D	A	B	E	A	B
Approach Vol, veh/h		546			1037			76			408	
Approach Delay, s/veh		15.0			14.4			38.6			28.5	
Approach LOS		B			B			D			C	

Timer - Assigned Phs	2	4	6	8
Phs Duration (G+Y+Rc), s	33.0	36.7	33.0	36.7
Change Period (Y+Rc), s	4.5	4.5	4.5	4.5
Max Green Setting (Gmax), s	28.5	32.5	28.5	32.5
Max Q Clear Time (g_c+I1), s	30.5	32.1	30.5	16.5
Green Ext Time (p_c), s	0.0	0.2	0.0	6.6

Intersection Summary	
HCM 6th Ctrl Delay	18.2
HCM 6th LOS	B

Lane Group	EBL	EBT	EBR	WBL	WBT	WBR	NBL	NBT	NBR	SBL	SBT	SBR
Lane Group Flow (vph)	33	240	27	14	339	9	68	7	14	21	7	107
v/c Ratio	0.10	0.21	0.05	0.04	0.29	0.02	0.17	0.01	0.03	0.05	0.01	0.20
Control Delay	6.4	6.2	3.1	5.8	6.6	1.5	7.8	6.5	2.8	6.9	6.5	3.1
Queue Delay	0.0	0.0	0.0	0.0	0.0	0.0	0.0	0.0	0.0	0.0	0.0	0.0
Total Delay	6.4	6.2	3.1	5.8	6.6	1.5	7.8	6.5	2.8	6.9	6.5	3.1
Queue Length 50th (ft)	2	8	0	1	13	0	5	0	0	2	0	0
Queue Length 95th (ft)	10	20	6	5	27	2	19	2	4	8	2	13
Internal Link Dist (ft)		2061			2031			426			951	
Turn Bay Length (ft)	325		275	275		275	250		275	250		275
Base Capacity (vph)	1021	3539	1583	1123	3539	1583	1403	3539	1583	1403	3539	1583
Starvation Cap Reductn	0	0	0	0	0	0	0	0	0	0	0	0
Spillback Cap Reductn	0	0	0	0	0	0	0	0	0	0	0	0
Storage Cap Reductn	0	0	0	0	0	0	0	0	0	0	0	0
Reduced v/c Ratio	0.03	0.07	0.02	0.01	0.10	0.01	0.05	0.00	0.01	0.01	0.00	0.07

Intersection Summary

Movement	EBL	EBT	EBR	WBL	WBT	WBR	NBL	NBT	NBR	SBL	SBT	SBR
Lane Configurations												
Traffic Volume (veh/h)	30	221	25	13	312	8	63	6	13	19	6	98
Future Volume (veh/h)	30	221	25	13	312	8	63	6	13	19	6	98
Initial Q (Qb), veh	0	0	0	0	0	0	0	0	0	0	0	0
Ped-Bike Adj(A_pbT)	1.00		1.00	1.00		1.00	1.00		1.00	1.00		1.00
Parking Bus, Adj	1.00	1.00	1.00	1.00	1.00	1.00	1.00	1.00	1.00	1.00	1.00	1.00
Work Zone On Approach		No			No			No			No	
Adj Sat Flow, veh/h/ln	1870	1870	1870	1870	1870	1870	1870	1870	1870	1870	1870	1870
Adj Flow Rate, veh/h	33	240	27	14	339	9	68	7	14	21	7	107
Peak Hour Factor	0.92	0.92	0.92	0.92	0.92	0.92	0.92	0.92	0.92	0.92	0.92	0.92
Percent Heavy Veh, %	2	2	2	2	2	2	2	2	2	2	2	2
Cap, veh/h	586	1021	455	629	1021	455	690	905	403	719	905	403
Arrive On Green	0.29	0.29	0.29	0.29	0.29	0.29	0.25	0.25	0.25	0.25	0.25	0.25
Sat Flow, veh/h	1033	3554	1585	1112	3554	1585	1279	3554	1585	1391	3554	1585
Grp Volume(v), veh/h	33	240	27	14	339	9	68	7	14	21	7	107
Grp Sat Flow(s),veh/h/ln	1033	1777	1585	1112	1777	1585	1279	1777	1585	1391	1777	1585
Q Serve(g_s), s	0.5	1.0	0.2	0.2	1.5	0.1	0.8	0.0	0.1	0.2	0.0	1.1
Cycle Q Clear(g_c), s	2.0	1.0	0.2	1.2	1.5	0.1	0.9	0.0	0.1	0.3	0.0	1.1
Prop In Lane	1.00		1.00	1.00		1.00	1.00		1.00	1.00		1.00
Lane Grp Cap(c), veh/h	586	1021	455	629	1021	455	690	905	403	719	905	403
V/C Ratio(X)	0.06	0.24	0.06	0.02	0.33	0.02	0.10	0.01	0.03	0.03	0.01	0.27
Avail Cap(c_a), veh/h	1761	5065	2259	1895	5065	2259	2187	5065	2259	2347	5065	2259
HCM Platoon Ratio	1.00	1.00	1.00	1.00	1.00	1.00	1.00	1.00	1.00	1.00	1.00	1.00
Upstream Filter(I)	1.00	1.00	1.00	1.00	1.00	1.00	1.00	1.00	1.00	1.00	1.00	1.00
Uniform Delay (d), s/veh	6.3	5.4	5.1	5.8	5.5	5.0	5.8	5.5	5.5	5.6	5.5	5.9
Incr Delay (d2), s/veh	0.0	0.1	0.1	0.0	0.2	0.0	0.1	0.0	0.0	0.0	0.0	0.3
Initial Q Delay(d3),s/veh	0.0	0.0	0.0	0.0	0.0	0.0	0.0	0.0	0.0	0.0	0.0	0.0
%ile BackOfQ(50%),veh/ln	0.1	0.1	0.0	0.0	0.2	0.0	0.1	0.0	0.0	0.0	0.0	0.2
Unsig. Movement Delay, s/veh												
LnGrp Delay(d),s/veh	6.3	5.5	5.1	5.8	5.7	5.0	5.8	5.5	5.5	5.6	5.5	6.2
LnGrp LOS	A	A	A	A	A	A	A	A	A	A	A	A
Approach Vol, veh/h		300			362			89			135	
Approach Delay, s/veh		5.5			5.7			5.8			6.1	
Approach LOS		A			A			A			A	

Timer - Assigned Phs	2	4	6	8
Phs Duration (G+Y+Rc), s	9.5	10.1	9.5	10.1
Change Period (Y+Rc), s	4.5	4.5	4.5	4.5
Max Green Setting (Gmax), s	28.0	28.0	28.0	28.0
Max Q Clear Time (g_c+I1), s	2.9	4.0	3.1	3.5
Green Ext Time (p_c), s	0.2	1.7	0.4	2.3

Intersection Summary	
HCM 6th Ctrl Delay	5.7
HCM 6th LOS	A

Lane Group	EBL	EBT	EBR	WBL	WBT	WBR	NBL	NBT	NBR	SBL	SBT	SBR
Lane Group Flow (vph)	83	267	35	48	446	15	137	7	35	15	7	155
v/c Ratio	0.25	0.21	0.06	0.12	0.35	0.03	0.33	0.01	0.07	0.04	0.01	0.27
Control Delay	8.6	6.6	3.1	7.0	7.3	2.4	10.5	7.5	4.0	7.8	7.5	3.4
Queue Delay	0.0	0.0	0.0	0.0	0.0	0.0	0.0	0.0	0.0	0.0	0.0	0.0
Total Delay	8.6	6.6	3.1	7.0	7.3	2.4	10.5	7.5	4.0	7.8	7.5	3.4
Queue Length 50th (ft)	7	11	0	4	20	0	13	1	0	1	1	0
Queue Length 95th (ft)	26	28	8	16	45	4	44	5	10	9	5	21
Internal Link Dist (ft)		1938			2061			478			615	
Turn Bay Length (ft)	300		275	275		250	275		275	275		235
Base Capacity (vph)	879	3382	1514	1044	3382	1514	1181	1568	1338	1181	1568	1357
Starvation Cap Reductn	0	0	0	0	0	0	0	0	0	0	0	0
Spillback Cap Reductn	0	0	0	0	0	0	0	0	0	0	0	0
Storage Cap Reductn	0	0	0	0	0	0	0	0	0	0	0	0
Reduced v/c Ratio	0.09	0.08	0.02	0.05	0.13	0.01	0.12	0.00	0.03	0.01	0.00	0.11

Intersection Summary

Movement	EBL	EBT	EBR	WBL	WBT	WBR	NBL	NBT	NBR	SBL	SBT	SBR
Lane Configurations												
Traffic Volume (veh/h)	76	246	32	44	410	14	126	6	32	14	6	143
Future Volume (veh/h)	76	246	32	44	410	14	126	6	32	14	6	143
Initial Q (Qb), veh	0	0	0	0	0	0	0	0	0	0	0	0
Ped-Bike Adj(A_pbT)	1.00		1.00	1.00		1.00	1.00		1.00	1.00		1.00
Parking Bus, Adj	1.00	1.00	1.00	1.00	1.00	1.00	1.00	1.00	1.00	1.00	1.00	1.00
Work Zone On Approach		No			No			No			No	
Adj Sat Flow, veh/h/ln	1870	1870	1870	1870	1870	1870	1870	1870	1870	1870	1870	1870
Adj Flow Rate, veh/h	83	267	35	48	446	15	137	7	35	15	7	155
Peak Hour Factor	0.92	0.92	0.92	0.92	0.92	0.92	0.92	0.92	0.92	0.92	0.92	0.92
Percent Heavy Veh, %	2	2	2	2	2	2	2	2	2	2	2	2
Cap, veh/h	578	1272	567	660	1272	567	607	429	363	639	429	363
Arrive On Green	0.36	0.36	0.36	0.36	0.36	0.36	0.23	0.23	0.23	0.23	0.23	0.23
Sat Flow, veh/h	931	3554	1585	1077	3554	1585	1224	1870	1585	1365	1870	1585
Grp Volume(v), veh/h	83	267	35	48	446	15	137	7	35	15	7	155
Grp Sat Flow(s),veh/h/ln	931	1777	1585	1077	1777	1585	1224	1870	1585	1365	1870	1585
Q Serve(g_s), s	1.6	1.1	0.3	0.7	2.0	0.1	2.1	0.1	0.4	0.2	0.1	1.8
Cycle Q Clear(g_c), s	3.6	1.1	0.3	1.8	2.0	0.1	2.2	0.1	0.4	0.3	0.1	1.8
Prop In Lane	1.00		1.00	1.00		1.00	1.00		1.00	1.00		1.00
Lane Grp Cap(c), veh/h	578	1272	567	660	1272	567	607	429	363	639	429	363
V/C Ratio(X)	0.14	0.21	0.06	0.07	0.35	0.03	0.23	0.02	0.10	0.02	0.02	0.43
Avail Cap(c_a), veh/h	1461	4645	2072	1682	4645	2072	1590	1930	1636	1734	1930	1636
HCM Platoon Ratio	1.00	1.00	1.00	1.00	1.00	1.00	1.00	1.00	1.00	1.00	1.00	1.00
Upstream Filter(I)	1.00	1.00	1.00	1.00	1.00	1.00	1.00	1.00	1.00	1.00	1.00	1.00
Uniform Delay (d), s/veh	6.5	4.9	4.6	5.5	5.1	4.5	7.3	6.5	6.6	6.6	6.5	7.2
Incr Delay (d2), s/veh	0.1	0.1	0.0	0.0	0.2	0.0	0.2	0.0	0.1	0.0	0.0	0.8
Initial Q Delay(d3),s/veh	0.0	0.0	0.0	0.0	0.0	0.0	0.0	0.0	0.0	0.0	0.0	0.0
%ile BackOfQ(50%),veh/ln	0.2	0.2	0.0	0.1	0.3	0.0	0.3	0.0	0.1	0.0	0.0	0.4
Unsig. Movement Delay, s/veh												
LnGrp Delay(d),s/veh	6.6	4.9	4.6	5.5	5.3	4.6	7.5	6.5	6.7	6.6	6.5	8.0
LnGrp LOS	A	A	A	A	A	A	A	A	A	A	A	A
Approach Vol, veh/h		385			509			179			177	
Approach Delay, s/veh		5.3			5.3			7.3			7.8	
Approach LOS		A			A			A			A	

Timer - Assigned Phs		2		4		6		8				
Phs Duration (G+Y+Rc), s		9.5		12.3		9.5		12.3				
Change Period (Y+Rc), s		4.5		4.5		4.5		4.5				
Max Green Setting (Gmax), s		22.5		28.5		22.5		28.5				
Max Q Clear Time (g_c+I1), s		4.2		5.6		3.8		4.0				
Green Ext Time (p_c), s		0.5		2.3		0.5		3.3				

Intersection Summary	
HCM 6th Ctrl Delay	5.9
HCM 6th LOS	A

Lane Group	WBL	WBR	NBT	NBR	SBL	SBT
Lane Group Flow (vph)	1079	662	734	376	233	1168
v/c Ratio	0.93	0.76	0.59	0.24	0.58	0.60
Control Delay	40.0	19.6	23.9	0.4	15.6	13.9
Queue Delay	0.0	0.0	0.0	0.0	0.0	0.0
Total Delay	40.0	19.6	23.9	0.4	15.6	13.9
Queue Length 50th (ft)	261	213	159	0	57	194
Queue Length 95th (ft)	#385	348	218	0	96	255
Internal Link Dist (ft)	1938		1222			1449
Turn Bay Length (ft)	325			290	1000	
Base Capacity (vph)	1187	901	1246	1583	431	1936
Starvation Cap Reductn	0	0	0	0	0	0
Spillback Cap Reductn	0	0	0	0	0	0
Storage Cap Reductn	0	0	0	0	0	0
Reduced v/c Ratio	0.91	0.73	0.59	0.24	0.54	0.60

Intersection Summary

95th percentile volume exceeds capacity, queue may be longer.
Queue shown is maximum after two cycles.

Movement	WBL	WBR	NBT	NBR	SBL	SBT
Lane Configurations						
Traffic Volume (veh/h)	993	609	675	346	214	1075
Future Volume (veh/h)	993	609	675	346	214	1075
Initial Q (Qb), veh	0	0	0	0	0	0
Ped-Bike Adj(A_pbT)	1.00	1.00		1.00	1.00	
Parking Bus, Adj	1.00	1.00	1.00	1.00	1.00	1.00
Work Zone On Approach	No		No			No
Adj Sat Flow, veh/h/ln	1870	1870	1870	1870	1870	1870
Adj Flow Rate, veh/h	1079	662	734	0	233	1168
Peak Hour Factor	0.92	0.92	0.92	0.92	0.92	0.92
Percent Heavy Veh, %	2	2	2	2	2	2
Cap, veh/h	1188	705	1373		434	1932
Arrive On Green	0.34	0.34	0.39	0.00	0.10	0.54
Sat Flow, veh/h	3456	1585	3647	1585	1781	3647
Grp Volume(v), veh/h	1079	662	734	0	233	1168
Grp Sat Flow(s),veh/h/ln	1728	1585	1777	1585	1781	1777
Q Serve(g_s), s	23.8	27.5	12.8	0.0	5.9	17.9
Cycle Q Clear(g_c), s	23.8	27.5	12.8	0.0	5.9	17.9
Prop In Lane	1.00	1.00		1.00	1.00	
Lane Grp Cap(c), veh/h	1188	705	1373		434	1932
V/C Ratio(X)	0.91	0.94	0.53		0.54	0.60
Avail Cap(c_a), veh/h	1188	705	1373		532	1932
HCM Platoon Ratio	1.00	1.00	1.00	1.00	1.00	1.00
Upstream Filter(I)	1.00	1.00	1.00	0.00	1.00	1.00
Uniform Delay (d), s/veh	25.0	21.2	19.0	0.0	13.0	12.4
Incr Delay (d2), s/veh	10.3	20.3	1.5	0.0	1.0	1.4
Initial Q Delay(d3),s/veh	0.0	0.0	0.0	0.0	0.0	0.0
%ile BackOfQ(50%),veh/ln	10.9	14.7	5.3	0.0	2.2	6.7
Unsig. Movement Delay, s/veh						
LnGrp Delay(d),s/veh	35.3	41.5	20.5	0.0	14.0	13.8
LnGrp LOS	D	D	C		B	B
Approach Vol, veh/h	1741		734	A		1401
Approach Delay, s/veh	37.7		20.5			13.8
Approach LOS	D		C			B

Timer - Assigned Phs	1	2				6	8
Phs Duration (G+Y+Rc), s	12.6	35.4				48.0	32.0
Change Period (Y+Rc), s	4.5	4.5				4.5	4.5
Max Green Setting (Gmax), s	12.5	26.5				43.5	27.5
Max Q Clear Time (g_c+I1), s	7.9	14.8				19.9	29.5
Green Ext Time (p_c), s	0.3	3.9				9.5	0.0

Intersection Summary	
HCM 6th Ctrl Delay	25.8
HCM 6th LOS	C

Notes

Unsignalized Delay for [NBR] is excluded from calculations of the approach delay and intersection delay.

Lane Group	EBL	EBT	EBR	WBL	WBT	WBR	NBL	NBT	NBR	SBL	SBT	SBR
Lane Group Flow (vph)	41	424	55	425	1195	633	178	588	174	250	565	49
v/c Ratio	0.23	0.32	0.08	0.78	0.87	0.73	0.65	0.53	0.20	0.93	0.51	0.07
Control Delay	48.9	29.3	0.2	49.9	35.6	20.3	56.2	30.1	5.3	85.3	29.9	0.2
Queue Delay	0.0	0.0	0.0	0.0	0.0	0.0	0.0	0.0	0.0	0.0	0.0	0.0
Total Delay	48.9	29.3	0.2	49.9	35.6	20.3	56.2	30.1	5.3	85.3	29.9	0.2
Queue Length 50th (ft)	13	77	0	134	359	243	58	164	17	83	157	0
Queue Length 95th (ft)	30	106	0	187	451	387	#101	220	51	#162	212	0
Internal Link Dist (ft)		664			834			2595			1908	
Turn Bay Length (ft)	235		235	275		455	455		455	385		385
Base Capacity (vph)	180	1498	680	595	1468	873	277	1115	904	270	1111	722
Starvation Cap Reductn	0	0	0	0	0	0	0	0	0	0	0	0
Spillback Cap Reductn	0	0	0	0	0	0	0	0	0	0	0	0
Storage Cap Reductn	0	0	0	0	0	0	0	0	0	0	0	0
Reduced v/c Ratio	0.23	0.28	0.08	0.71	0.81	0.73	0.64	0.53	0.19	0.93	0.51	0.07

Intersection Summary

95th percentile volume exceeds capacity, queue may be longer.
Queue shown is maximum after two cycles.

Movement	EBL	EBT	EBR	WBL	WBT	WBR	NBL	NBT	NBR	SBL	SBT	SBR
Lane Configurations												
Traffic Volume (veh/h)	38	390	51	391	1099	582	164	541	160	230	520	45
Future Volume (veh/h)	38	390	51	391	1099	582	164	541	160	230	520	45
Initial Q (Qb), veh	0	0	0	0	0	0	0	0	0	0	0	0
Ped-Bike Adj(A_pbT)	1.00		1.00	1.00		1.00	1.00		1.00	1.00		1.00
Parking Bus, Adj	1.00	1.00	1.00	1.00	1.00	1.00	1.00	1.00	1.00	1.00	1.00	1.00
Work Zone On Approach		No			No			No			No	
Adj Sat Flow, veh/h/ln	1870	1870	1870	1870	1870	1870	1870	1870	1870	1870	1870	1870
Adj Flow Rate, veh/h	41	424	0	425	1195	0	178	588	0	250	565	0
Peak Hour Factor	0.92	0.92	0.92	0.92	0.92	0.92	0.92	0.92	0.92	0.92	0.92	0.92
Percent Heavy Veh, %	2	2	2	2	2	2	2	2	2	2	2	2
Cap, veh/h	120	1388		505	1362		246	1118		272	1144	
Arrive On Green	0.03	0.27	0.00	0.15	0.38	0.00	0.07	0.31	0.00	0.08	0.32	0.00
Sat Flow, veh/h	3456	5106	1585	3456	3554	1585	3456	3554	1585	3456	3554	1585
Grp Volume(v), veh/h	41	424	0	425	1195	0	178	588	0	250	565	0
Grp Sat Flow(s),veh/h/ln	1728	1702	1585	1728	1777	1585	1728	1777	1585	1728	1777	1585
Q Serve(g_s), s	1.1	6.3	0.0	11.4	29.8	0.0	4.8	13.0	0.0	6.9	12.2	0.0
Cycle Q Clear(g_c), s	1.1	6.3	0.0	11.4	29.8	0.0	4.8	13.0	0.0	6.9	12.2	0.0
Prop In Lane	1.00		1.00	1.00		1.00	1.00		1.00	1.00		1.00
Lane Grp Cap(c), veh/h	120	1388		505	1362		246	1118		272	1144	
V/C Ratio(X)	0.34	0.31		0.84	0.88		0.72	0.53		0.92	0.49	
Avail Cap(c_a), veh/h	181	1499		598	1472		279	1118		272	1144	
HCM Platoon Ratio	1.00	1.00	1.00	1.00	1.00	1.00	1.00	1.00	1.00	1.00	1.00	1.00
Upstream Filter(I)	1.00	1.00	0.00	1.00	1.00	0.00	1.00	1.00	0.00	1.00	1.00	0.00
Uniform Delay (d), s/veh	45.0	27.6	0.0	39.6	27.3	0.0	43.4	26.8	0.0	43.6	26.1	0.0
Incr Delay (d2), s/veh	1.7	0.1	0.0	9.2	6.0	0.0	7.7	1.8	0.0	34.1	1.5	0.0
Initial Q Delay(d3),s/veh	0.0	0.0	0.0	0.0	0.0	0.0	0.0	0.0	0.0	0.0	0.0	0.0
%ile BackOfQ(50%),veh/ln	0.5	2.5	0.0	5.4	13.3	0.0	2.3	5.7	0.0	4.2	5.3	0.0
Unsig. Movement Delay, s/veh												
LnGrp Delay(d),s/veh	46.6	27.7	0.0	48.8	33.3	0.0	51.1	28.6	0.0	77.8	27.6	0.0
LnGrp LOS	D	C		D	C		D	C		E	C	
Approach Vol, veh/h		465	A		1620	A		766	A		815	A
Approach Delay, s/veh		29.4			37.4			33.8			43.0	
Approach LOS		C			D			C			D	

Timer - Assigned Phs	1	2	3	4	5	6	7	8
Phs Duration (G+Y+Rc), s	12.0	34.5	18.4	30.4	11.3	35.2	7.8	41.0
Change Period (Y+Rc), s	4.5	4.5	4.5	4.5	4.5	4.5	4.5	4.5
Max Green Setting (Gmax), s	7.5	30.0	16.5	28.0	7.7	29.8	5.0	39.5
Max Q Clear Time (g_c+I1), s	8.9	15.0	13.4	8.3	6.8	14.2	3.1	31.8
Green Ext Time (p_c), s	0.0	3.5	0.5	2.8	0.0	3.4	0.0	4.7

Intersection Summary	
HCM 6th Ctrl Delay	36.9
HCM 6th LOS	D

Notes

Unsignalized Delay for [NBR, EBR, WBR, SBR] is excluded from calculations of the approach delay and intersection delay.

Lane Group	EBL	EBT	EBR	WBL	WBT	WBR	NBL	NBT	SBL	SBT
Lane Group Flow (vph)	126	399	21	4	990	43	61	15	84	324
v/c Ratio	0.60	0.23	0.03	0.01	0.57	0.05	0.24	0.03	0.20	0.62
Control Delay	26.0	7.8	3.8	7.8	10.5	3.3	17.0	8.4	15.4	18.4
Queue Delay	0.0	0.0	0.0	0.0	0.0	0.0	0.0	0.0	0.0	0.0
Total Delay	26.0	7.8	3.8	7.8	10.5	3.3	17.0	8.4	15.4	18.4
Queue Length 50th (ft)	22	28	0	1	88	0	14	0	18	65
Queue Length 95th (ft)	#114	69	9	5	191	14	41	11	50	148
Internal Link Dist (ft)		2031			726			424		476
Turn Bay Length (ft)	485		275	235		275	235		235	
Base Capacity (vph)	299	2510	1129	682	2510	1135	551	1049	897	1043
Starvation Cap Reductn	0	0	0	0	0	0	0	0	0	0
Spillback Cap Reductn	0	0	0	0	0	0	0	0	0	0
Storage Cap Reductn	0	0	0	0	0	0	0	0	0	0
Reduced v/c Ratio	0.42	0.16	0.02	0.01	0.39	0.04	0.11	0.01	0.09	0.31

Intersection Summary

95th percentile volume exceeds capacity, queue may be longer.
Queue shown is maximum after two cycles.

Movement	EBL	EBT	EBR	WBL	WBT	WBR	NBL	NBT	NBR	SBL	SBT	SBR
Lane Configurations												
Traffic Volume (veh/h)	116	367	19	4	911	40	56	2	12	77	2	296
Future Volume (veh/h)	116	367	19	4	911	40	56	2	12	77	2	296
Initial Q (Qb), veh	0	0	0	0	0	0	0	0	0	0	0	0
Ped-Bike Adj(A_pbT)	1.00		1.00	1.00		1.00	1.00		1.00	1.00		1.00
Parking Bus, Adj	1.00	1.00	1.00	1.00	1.00	1.00	1.00	1.00	1.00	1.00	1.00	1.00
Work Zone On Approach		No			No			No			No	
Adj Sat Flow, veh/h/ln	1870	1870	1870	1870	1870	1870	1870	1870	1870	1870	1870	1870
Adj Flow Rate, veh/h	126	399	21	4	990	43	61	2	13	84	2	322
Peak Hour Factor	0.92	0.92	0.92	0.92	0.92	0.92	0.92	0.92	0.92	0.92	0.92	0.92
Percent Heavy Veh, %	2	2	2	2	2	2	2	2	2	2	2	2
Cap, veh/h	337	1817	811	596	1817	811	271	62	403	553	3	453
Arrive On Green	0.51	0.51	0.51	0.51	0.51	0.51	0.29	0.29	0.29	0.29	0.29	0.29
Sat Flow, veh/h	546	3554	1585	967	3554	1585	1056	216	1402	1398	10	1577
Grp Volume(v), veh/h	126	399	21	4	990	43	61	0	15	84	0	324
Grp Sat Flow(s),veh/h/ln	546	1777	1585	967	1777	1585	1056	0	1618	1398	0	1587
Q Serve(g_s), s	9.1	2.8	0.3	0.1	8.4	0.6	2.5	0.0	0.3	2.1	0.0	8.2
Cycle Q Clear(g_c), s	17.5	2.8	0.3	2.9	8.4	0.6	10.6	0.0	0.3	2.4	0.0	8.2
Prop In Lane	1.00		1.00	1.00		1.00	1.00		0.87	1.00		0.99
Lane Grp Cap(c), veh/h	337	1817	811	596	1817	811	271	0	465	553	0	456
V/C Ratio(X)	0.37	0.22	0.03	0.01	0.54	0.05	0.22	0.00	0.03	0.15	0.00	0.71
Avail Cap(c_a), veh/h	455	2583	1152	804	2583	1152	641	0	1031	1043	0	1011
HCM Platoon Ratio	1.00	1.00	1.00	1.00	1.00	1.00	1.00	1.00	1.00	1.00	1.00	1.00
Upstream Filter(I)	1.00	1.00	1.00	1.00	1.00	1.00	1.00	0.00	1.00	1.00	0.00	1.00
Uniform Delay (d), s/veh	13.3	6.0	5.4	6.8	7.4	5.5	19.0	0.0	11.5	12.3	0.0	14.3
Incr Delay (d2), s/veh	0.7	0.1	0.0	0.0	0.3	0.0	0.4	0.0	0.0	0.1	0.0	2.1
Initial Q Delay(d3),s/veh	0.0	0.0	0.0	0.0	0.0	0.0	0.0	0.0	0.0	0.0	0.0	0.0
%ile BackOfQ(50%),veh/ln	1.0	0.7	0.1	0.0	2.3	0.1	0.6	0.0	0.1	0.6	0.0	2.7
Unsig. Movement Delay, s/veh												
LnGrp Delay(d),s/veh	14.0	6.1	5.4	6.8	7.7	5.5	19.4	0.0	11.5	12.4	0.0	16.3
LnGrp LOS	B	A	A	A	A	A	B	A	B	B	A	B
Approach Vol, veh/h		546			1037			76			408	
Approach Delay, s/veh		7.9			7.6			17.9			15.5	
Approach LOS		A			A			B			B	

Timer - Assigned Phs	2	4	6	8
Phs Duration (G+Y+Rc), s	17.3	27.4	17.3	27.4
Change Period (Y+Rc), s	4.5	4.5	4.5	4.5
Max Green Setting (Gmax), s	28.5	32.5	28.5	32.5
Max Q Clear Time (g_c+I1), s	12.6	19.5	10.2	10.4
Green Ext Time (p_c), s	0.2	3.3	2.3	7.7

Intersection Summary	
HCM 6th Ctrl Delay	9.6
HCM 6th LOS	A

Lane Group	EBL	EBT	EBR	WBL	WBT	WBR	NBL	NBT	NBR	SBL	SBT	SBR
Lane Group Flow (vph)	211	310	118	158	232	78	65	668	170	74	826	300
v/c Ratio	0.63	0.51	0.32	0.52	0.38	0.21	0.20	0.43	0.21	0.19	0.52	0.34
Control Delay	29.5	29.4	7.8	25.9	27.6	3.4	9.4	15.4	3.4	9.1	16.5	3.2
Queue Delay	0.0	0.0	0.0	0.0	0.0	0.0	0.0	0.0	0.0	0.0	0.0	0.0
Total Delay	29.5	29.4	7.8	25.9	27.6	3.4	9.4	15.4	3.4	9.1	16.5	3.2
Queue Length 50th (ft)	71	65	0	52	47	0	11	102	0	13	133	0
Queue Length 95th (ft)	125	102	38	95	78	15	31	164	34	35	208	44
Internal Link Dist (ft)		911			760			1157			1874	
Turn Bay Length (ft)	235		450	200		400	700		600			490
Base Capacity (vph)	335	1869	893	302	1869	893	330	1566	795	397	1574	870
Starvation Cap Reductn	0	0	0	0	0	0	0	0	0	0	0	0
Spillback Cap Reductn	0	0	0	0	0	0	0	0	0	0	0	0
Storage Cap Reductn	0	0	0	0	0	0	0	0	0	0	0	0
Reduced v/c Ratio	0.63	0.17	0.13	0.52	0.12	0.09	0.20	0.43	0.21	0.19	0.52	0.34

Intersection Summary

Movement	EBL	EBT	EBR	WBL	WBT	WBR	NBL	NBT	NBR	SBL	SBT	SBR
Lane Configurations												
Traffic Volume (veh/h)	194	285	109	145	213	72	60	615	156	68	760	276
Future Volume (veh/h)	194	285	109	145	213	72	60	615	156	68	760	276
Initial Q (Qb), veh	0	0	0	0	0	0	0	0	0	0	0	0
Ped-Bike Adj(A_pbT)	1.00		1.00	1.00		1.00	1.00		1.00	1.00		1.00
Parking Bus, Adj	1.00	1.00	1.00	1.00	1.00	1.00	1.00	1.00	1.00	1.00	1.00	1.00
Work Zone On Approach		No			No			No			No	
Adj Sat Flow, veh/h/ln	1870	1870	1870	1870	1870	1870	1870	1870	1870	1870	1870	1870
Adj Flow Rate, veh/h	211	310	0	158	232	0	65	668	0	74	826	0
Peak Hour Factor	0.92	0.92	0.92	0.92	0.92	0.92	0.92	0.92	0.92	0.92	0.92	0.92
Percent Heavy Veh, %	2	2	2	2	2	2	2	2	2	2	2	2
Cap, veh/h	349	508		319	508		392	1601		455	1613	
Arrive On Green	0.08	0.14	0.00	0.08	0.14	0.00	0.05	0.45	0.00	0.06	0.45	0.00
Sat Flow, veh/h	1781	3554	1585	1781	3554	1585	1781	3554	1585	1781	3554	1585
Grp Volume(v), veh/h	211	310	0	158	232	0	65	668	0	74	826	0
Grp Sat Flow(s),veh/h/ln	1781	1777	1585	1781	1777	1585	1781	1777	1585	1781	1777	1585
Q Serve(g_s), s	5.5	5.5	0.0	5.1	4.0	0.0	1.3	8.5	0.0	1.4	11.1	0.0
Cycle Q Clear(g_c), s	5.5	5.5	0.0	5.1	4.0	0.0	1.3	8.5	0.0	1.4	11.1	0.0
Prop In Lane	1.00		1.00	1.00		1.00	1.00		1.00	1.00		1.00
Lane Grp Cap(c), veh/h	349	508		319	508		392	1601		455	1613	
V/C Ratio(X)	0.60	0.61		0.50	0.46		0.17	0.42		0.16	0.51	
Avail Cap(c_a), veh/h	349	1914		319	1914		432	1601		494	1613	
HCM Platoon Ratio	1.00	1.00	1.00	1.00	1.00	1.00	1.00	1.00	1.00	1.00	1.00	1.00
Upstream Filter(I)	1.00	1.00	0.00	1.00	1.00	0.00	1.00	1.00	0.00	1.00	1.00	0.00
Uniform Delay (d), s/veh	23.9	27.0	0.0	22.3	26.3	0.0	9.6	12.5	0.0	9.1	13.0	0.0
Incr Delay (d2), s/veh	2.9	1.2	0.0	1.2	0.6	0.0	0.2	0.8	0.0	0.2	1.2	0.0
Initial Q Delay(d3),s/veh	0.0	0.0	0.0	0.0	0.0	0.0	0.0	0.0	0.0	0.0	0.0	0.0
%ile BackOfQ(50%),veh/ln	3.3	2.3	0.0	2.1	1.7	0.0	0.4	3.2	0.0	0.5	4.2	0.0
Unsig. Movement Delay, s/veh												
LnGrp Delay(d),s/veh	26.8	28.2	0.0	23.5	27.0	0.0	9.8	13.3	0.0	9.3	14.2	0.0
LnGrp LOS	C	C		C	C		A	B		A	B	
Approach Vol, veh/h		521	A		390	A		733	A		900	A
Approach Delay, s/veh		27.6			25.6			13.0			13.8	
Approach LOS		C			C			B			B	

Timer - Assigned Phs	1	2	3	4	5	6	7	8
Phs Duration (G+Y+Rc), s	8.2	34.7	10.0	14.1	8.0	34.9	10.0	14.1
Change Period (Y+Rc), s	4.5	4.5	4.5	4.5	4.5	4.5	4.5	4.5
Max Green Setting (Gmax), s	5.2	30.2	5.5	36.1	5.0	30.4	5.5	36.1
Max Q Clear Time (g_c+I1), s	3.4	10.5	7.1	7.5	3.3	13.1	7.5	6.0
Green Ext Time (p_c), s	0.0	4.5	0.0	2.1	0.0	5.5	0.0	1.5

Intersection Summary	
HCM 6th Ctrl Delay	18.2
HCM 6th LOS	B

Notes

Unsignalized Delay for [NBR, EBR, WBR, SBR] is excluded from calculations of the approach delay and intersection delay.

Intersection	
Int Delay, s/veh	0.3

Movement	EBT	EBR	WBL	WBT	NBL	NBR
Lane Configurations						
Traffic Vol, veh/h	473	14	5	339	11	6
Future Vol, veh/h	473	14	5	339	11	6
Conflicting Peds, #/hr	0	0	0	0	0	0
Sign Control	Free	Free	Free	Free	Stop	Stop
RT Channelized	-	None	-	None	-	None
Storage Length	-	235	235	-	0	-
Veh in Median Storage, #	0	-	-	0	0	-
Grade, %	0	-	-	0	0	-
Peak Hour Factor	92	92	92	92	92	92
Heavy Vehicles, %	2	2	2	2	2	2
Mvmt Flow	514	15	5	368	12	7

Major/Minor	Major1		Major2		Minor1	
Conflicting Flow All	0	0	529	0	708	257
Stage 1	-	-	-	-	514	-
Stage 2	-	-	-	-	194	-
Critical Hdwy	-	-	4.14	-	6.84	6.94
Critical Hdwy Stg 1	-	-	-	-	5.84	-
Critical Hdwy Stg 2	-	-	-	-	5.84	-
Follow-up Hdwy	-	-	2.22	-	3.52	3.32
Pot Cap-1 Maneuver	-	-	1034	-	369	742
Stage 1	-	-	-	-	565	-
Stage 2	-	-	-	-	820	-
Platoon blocked, %	-	-		-		
Mov Cap-1 Maneuver	-	-	1034	-	367	742
Mov Cap-2 Maneuver	-	-	-	-	367	-
Stage 1	-	-	-	-	565	-
Stage 2	-	-	-	-	816	-

Approach	EB	WB	NB
HCM Control Delay, s	0	0.1	13.4
HCM LOS			B

Minor Lane/Major Mvmt	NBLn1	EBT	EBR	WBL	WBT
Capacity (veh/h)	447	-	-	1034	-
HCM Lane V/C Ratio	0.041	-	-	0.005	-
HCM Control Delay (s)	13.4	-	-	8.5	-
HCM Lane LOS	B	-	-	A	-
HCM 95th %tile Q(veh)	0.1	-	-	0	-

Lane Group	EBL	EBT	EBR	WBL	WBT	WBR	NBL	NBT	NBR	SBL	SBT	SBR
Lane Group Flow (vph)	76	1412	165	334	839	486	137	253	532	795	351	71
v/c Ratio	0.46	1.15	0.26	1.13	0.61	0.53	0.58	0.29	1.07	1.18	0.27	0.11
Control Delay	76.6	118.2	7.7	150.3	38.2	4.8	75.3	45.7	96.8	145.1	32.6	1.3
Queue Delay	0.0	0.0	0.0	0.0	0.0	0.0	0.0	0.0	0.0	0.0	0.0	0.0
Total Delay	76.6	118.2	7.7	150.3	38.2	4.8	75.3	45.7	96.8	145.1	32.6	1.3
Queue Length 50th (ft)	36	~820	11	~187	334	0	65	103	~443	~462	122	0
Queue Length 95th (ft)	64	#960	63	#290	404	74	102	144	#675	#591	163	8
Internal Link Dist (ft)		664			834			2595			1908	
Turn Bay Length (ft)	225		100				455		455	385		385
Base Capacity (vph)	168	1232	647	295	1368	909	255	866	498	674	1316	660
Starvation Cap Reductn	0	0	0	0	0	0	0	0	0	0	0	0
Spillback Cap Reductn	0	0	0	0	0	0	0	0	0	0	0	0
Storage Cap Reductn	0	0	0	0	0	0	0	0	0	0	0	0
Reduced v/c Ratio	0.45	1.15	0.26	1.13	0.61	0.53	0.54	0.29	1.07	1.18	0.27	0.11

Intersection Summary

~ Volume exceeds capacity, queue is theoretically infinite.
Queue shown is maximum after two cycles.

95th percentile volume exceeds capacity, queue may be longer.
Queue shown is maximum after two cycles.

Movement	EBL	EBT	EBR	WBL	WBT	WBR	NBL	NBT	NBR	SBL	SBT	SBR
Lane Configurations												
Traffic Volume (veh/h)	70	1299	152	307	772	447	126	233	489	731	323	65
Future Volume (veh/h)	70	1299	152	307	772	447	126	233	489	731	323	65
Initial Q (Qb), veh	0	0	0	0	0	0	0	0	0	0	0	0
Ped-Bike Adj(A_pbT)	1.00		1.00	1.00		1.00	1.00		1.00	1.00		1.00
Parking Bus, Adj	1.00	1.00	1.00	1.00	1.00	1.00	1.00	1.00	1.00	1.00	1.00	1.00
Work Zone On Approach		No			No			No			No	
Adj Sat Flow, veh/h/ln	1870	1870	1870	1870	1870	1870	1870	1870	1870	1870	1870	1870
Adj Flow Rate, veh/h	76	1412	0	334	839	0	137	253	0	795	351	0
Peak Hour Factor	0.92	0.92	0.92	0.92	0.92	0.92	0.92	0.92	0.92	0.92	0.92	0.92
Percent Heavy Veh, %	2	2	2	2	2	2	2	2	2	2	2	2
Cap, veh/h	118	1238		298	1423		185	870		679	1379	
Arrive On Green	0.03	0.35	0.00	0.09	0.40	0.00	0.05	0.24	0.00	0.20	0.39	0.00
Sat Flow, veh/h	3456	3554	1585	3456	3554	1585	3456	3554	1585	3456	3554	1585
Grp Volume(v), veh/h	76	1412	0	334	839	0	137	253	0	795	351	0
Grp Sat Flow(s),veh/h/ln	1728	1777	1585	1728	1777	1585	1728	1777	1585	1728	1777	1585
Q Serve(g_s), s	3.1	50.5	0.0	12.5	26.9	0.0	5.7	8.4	0.0	28.5	9.7	0.0
Cycle Q Clear(g_c), s	3.1	50.5	0.0	12.5	26.9	0.0	5.7	8.4	0.0	28.5	9.7	0.0
Prop In Lane	1.00		1.00	1.00		1.00	1.00		1.00	1.00		1.00
Lane Grp Cap(c), veh/h	118	1238		298	1423		185	870		679	1379	
V/C Ratio(X)	0.65	1.14		1.12	0.59		0.74	0.29		1.17	0.25	
Avail Cap(c_a), veh/h	169	1238		298	1423		257	870		679	1379	
HCM Platoon Ratio	1.00	1.00	1.00	1.00	1.00	1.00	1.00	1.00	1.00	1.00	1.00	1.00
Upstream Filter(I)	1.00	1.00	0.00	1.00	1.00	0.00	1.00	1.00	0.00	1.00	1.00	0.00
Uniform Delay (d), s/veh	69.2	47.2	0.0	66.3	34.1	0.0	67.6	44.5	0.0	58.3	30.1	0.0
Incr Delay (d2), s/veh	5.8	73.5	0.0	88.8	0.6	0.0	7.1	0.8	0.0	91.9	0.4	0.0
Initial Q Delay(d3),s/veh	0.0	0.0	0.0	0.0	0.0	0.0	0.0	0.0	0.0	0.0	0.0	0.0
%ile BackOfQ(50%),veh/ln	1.5	34.8	0.0	9.2	11.8	0.0	2.7	3.8	0.0	21.1	4.3	0.0
Unsig. Movement Delay, s/veh												
LnGrp Delay(d),s/veh	75.0	120.8	0.0	155.1	34.8	0.0	74.7	45.4	0.0	150.1	30.6	0.0
LnGrp LOS	E	F		F	C		E	D		F	C	
Approach Vol, veh/h		1488	A		1173	A		390	A		1146	A
Approach Delay, s/veh		118.5			69.0			55.7			113.5	
Approach LOS		F			E			E			F	

Timer - Assigned Phs	1	2	3	4	5	6	7	8
Phs Duration (G+Y+Rc), s	33.0	40.0	17.0	55.0	12.2	60.8	9.4	62.6
Change Period (Y+Rc), s	4.5	4.5	4.5	4.5	4.5	4.5	4.5	4.5
Max Green Setting (Gmax), s	28.5	35.5	12.5	50.5	10.8	53.2	7.1	55.9
Max Q Clear Time (g_c+I1), s	30.5	10.4	14.5	52.5	7.7	11.7	5.1	28.9
Green Ext Time (p_c), s	0.0	1.6	0.0	0.0	0.1	2.5	0.0	6.6

Intersection Summary	
HCM 6th Ctrl Delay	97.5
HCM 6th LOS	F

Notes

User approved pedestrian interval to be less than phase max green.

Unsignalized Delay for [NBR, EBR, WBR, SBR] is excluded from calculations of the approach delay and intersection delay.

Lane Group	WBL	WBR	NBT	NBR	SBL	SBT
Lane Group Flow (vph)	307	114	807	496	134	717
v/c Ratio	0.39	0.28	0.42	0.46	0.40	0.38
Control Delay	14.7	9.0	6.3	2.3	10.3	6.0
Queue Delay	0.0	0.0	0.0	0.0	0.0	0.0
Total Delay	14.7	9.0	6.3	2.3	10.3	6.0
Queue Length 50th (ft)	30	9	45	0	14	38
Queue Length 95th (ft)	56	37	83	30	49	72
Internal Link Dist (ft)	814		2717			2595
Turn Bay Length (ft)	250			250	400	
Base Capacity (vph)	2504	1172	2120	1147	368	2120
Starvation Cap Reductn	0	0	0	0	0	0
Spillback Cap Reductn	0	0	0	0	0	0
Storage Cap Reductn	0	0	0	0	0	0
Reduced v/c Ratio	0.12	0.10	0.38	0.43	0.36	0.34

Intersection Summary

Movement	WBL	WBR	NBT	NBR	SBL	SBT
Lane Configurations						
Traffic Volume (veh/h)	282	105	742	456	123	660
Future Volume (veh/h)	282	105	742	456	123	660
Initial Q (Qb), veh	0	0	0	0	0	0
Ped-Bike Adj(A_pbT)	1.00	1.00		1.00	1.00	
Parking Bus, Adj	1.00	1.00	1.00	1.00	1.00	1.00
Work Zone On Approach	No		No			No
Adj Sat Flow, veh/h/ln	1870	1870	1870	1870	1870	1870
Adj Flow Rate, veh/h	307	114	807	496	134	717
Peak Hour Factor	0.92	0.92	0.92	0.92	0.92	0.92
Percent Heavy Veh, %	2	2	2	2	2	2
Cap, veh/h	613	281	1995	890	392	1995
Arrive On Green	0.18	0.18	0.56	0.56	0.56	0.56
Sat Flow, veh/h	3456	1585	3647	1585	423	3647
Grp Volume(v), veh/h	307	114	807	496	134	717
Grp Sat Flow(s),veh/h/ln	1728	1585	1777	1585	423	1777
Q Serve(g_s), s	2.8	2.2	4.4	6.9	9.1	3.8
Cycle Q Clear(g_c), s	2.8	2.2	4.4	6.9	13.5	3.8
Prop In Lane	1.00	1.00		1.00	1.00	
Lane Grp Cap(c), veh/h	613	281	1995	890	392	1995
V/C Ratio(X)	0.50	0.41	0.40	0.56	0.34	0.36
Avail Cap(c_a), veh/h	2810	1289	2373	1059	437	2373
HCM Platoon Ratio	1.00	1.00	1.00	1.00	1.00	1.00
Upstream Filter(I)	1.00	1.00	1.00	1.00	1.00	1.00
Uniform Delay (d), s/veh	12.8	12.6	4.3	4.8	8.1	4.1
Incr Delay (d2), s/veh	0.6	0.9	0.1	0.5	0.5	0.1
Initial Q Delay(d3),s/veh	0.0	0.0	0.0	0.0	0.0	0.0
%ile BackOfQ(50%),veh/ln	0.9	0.7	0.7	1.1	0.6	0.6
Unsig. Movement Delay, s/veh						
LnGrp Delay(d),s/veh	13.4	13.5	4.4	5.4	8.6	4.3
LnGrp LOS	B	B	A	A	A	A
Approach Vol, veh/h	421		1303			851
Approach Delay, s/veh	13.4		4.8			4.9
Approach LOS	B		A			A

Timer - Assigned Phs		2				6	8
Phs Duration (G+Y+Rc), s		23.8				23.8	10.6
Change Period (Y+Rc), s		4.5				4.5	4.5
Max Green Setting (Gmax), s		23.0				23.0	28.0
Max Q Clear Time (g_c+I1), s		8.9				15.5	4.8
Green Ext Time (p_c), s		6.5				3.8	1.5

Intersection Summary	
HCM 6th Ctrl Delay	6.3
HCM 6th LOS	A

Lane Group	EBL	EBT	EBR	WBL	WBT	WBR	NBL	NBT	NBR	SBL	SBT	SBR
Lane Group Flow (vph)	526	383	140	82	328	110	88	223	54	110	329	312
v/c Ratio	0.83	0.18	0.14	0.14	0.15	0.11	0.39	0.27	0.13	0.42	0.40	0.52
Control Delay	24.0	5.8	1.7	6.5	5.7	1.7	29.8	23.4	8.1	29.7	24.4	6.6
Queue Delay	0.0	0.0	0.0	0.0	0.0	0.0	0.0	0.0	0.0	0.0	0.0	0.0
Total Delay	24.0	5.8	1.7	6.5	5.7	1.7	29.8	23.4	8.1	29.7	24.4	6.6
Queue Length 50th (ft)	129	27	0	11	22	0	31	40	0	40	62	0
Queue Length 95th (ft)	#433	63	20	37	54	18	79	77	26	93	110	58
Internal Link Dist (ft)		726			925			690			2070	
Turn Bay Length (ft)	300		275	300		275	300		275	300		500
Base Capacity (vph)	835	2863	1307	791	2863	1302	473	1704	790	549	1704	924
Starvation Cap Reductn	0	0	0	0	0	0	0	0	0	0	0	0
Spillback Cap Reductn	0	0	0	0	0	0	0	0	0	0	0	0
Storage Cap Reductn	0	0	0	0	0	0	0	0	0	0	0	0
Reduced v/c Ratio	0.63	0.13	0.11	0.10	0.11	0.08	0.19	0.13	0.07	0.20	0.19	0.34

Intersection Summary

95th percentile volume exceeds capacity, queue may be longer.
Queue shown is maximum after two cycles.

Movement	EBL	EBT	EBR	WBL	WBT	WBR	NBL	NBT	NBR	SBL	SBT	SBR
Lane Configurations												
Traffic Volume (veh/h)	484	352	129	75	302	101	81	205	50	101	303	287
Future Volume (veh/h)	484	352	129	75	302	101	81	205	50	101	303	287
Initial Q (Qb), veh	0	0	0	0	0	0	0	0	0	0	0	0
Ped-Bike Adj(A_pbT)	1.00		1.00	1.00		1.00	1.00		1.00	1.00		1.00
Parking Bus, Adj	1.00	1.00	1.00	1.00	1.00	1.00	1.00	1.00	1.00	1.00	1.00	1.00
Work Zone On Approach		No			No			No			No	
Adj Sat Flow, veh/h/ln	1870	1870	1870	1870	1870	1870	1870	1870	1870	1870	1870	1870
Adj Flow Rate, veh/h	526	383	140	82	328	110	88	223	54	110	329	312
Peak Hour Factor	0.92	0.92	0.92	0.92	0.92	0.92	0.92	0.92	0.92	0.92	0.92	0.92
Percent Heavy Veh, %	2	2	2	2	2	2	2	2	2	2	2	2
Cap, veh/h	658	2233	996	609	2233	996	234	894	399	318	894	399
Arrive On Green	0.63	0.63	0.63	0.63	0.63	0.63	0.25	0.25	0.25	0.25	0.25	0.25
Sat Flow, veh/h	951	3554	1585	879	3554	1585	788	3554	1585	1102	3554	1585
Grp Volume(v), veh/h	526	383	140	82	328	110	88	223	54	110	329	312
Grp Sat Flow(s),veh/h/ln	951	1777	1585	879	1777	1585	788	1777	1585	1102	1777	1585
Q Serve(g_s), s	38.0	3.4	2.7	3.2	2.8	2.1	7.8	3.8	2.0	6.6	5.7	13.8
Cycle Q Clear(g_c), s	40.9	3.4	2.7	6.6	2.8	2.1	13.5	3.8	2.0	10.4	5.7	13.8
Prop In Lane	1.00		1.00	1.00		1.00	1.00		1.00	1.00		1.00
Lane Grp Cap(c), veh/h	658	2233	996	609	2233	996	234	894	399	318	894	399
V/C Ratio(X)	0.80	0.17	0.14	0.13	0.15	0.11	0.38	0.25	0.14	0.35	0.37	0.78
Avail Cap(c_a), veh/h	726	2487	1109	672	2487	1109	335	1350	602	460	1350	602
HCM Platoon Ratio	1.00	1.00	1.00	1.00	1.00	1.00	1.00	1.00	1.00	1.00	1.00	1.00
Upstream Filter(I)	1.00	1.00	1.00	1.00	1.00	1.00	1.00	1.00	1.00	1.00	1.00	1.00
Uniform Delay (d), s/veh	14.1	5.8	5.7	7.2	5.7	5.6	28.7	22.4	21.7	26.6	23.2	26.2
Incr Delay (d2), s/veh	5.8	0.0	0.1	0.1	0.0	0.0	1.0	0.1	0.2	0.6	0.3	3.8
Initial Q Delay(d3),s/veh	0.0	0.0	0.0	0.0	0.0	0.0	0.0	0.0	0.0	0.0	0.0	0.0
%ile BackOfQ(50%),veh/ln	7.7	1.1	0.8	0.5	0.9	0.6	1.5	1.5	0.7	1.7	2.3	5.4
Unsig. Movement Delay, s/veh												
LnGrp Delay(d),s/veh	19.9	5.8	5.7	7.3	5.7	5.6	29.7	22.6	21.9	27.2	23.4	30.0
LnGrp LOS	B	A	A	A	A	A	C	C	C	C	C	C
Approach Vol, veh/h		1049			520			365			751	
Approach Delay, s/veh		12.9			6.0			24.2			26.7	
Approach LOS		B			A			C			C	

Timer - Assigned Phs	2	4	6	8
Phs Duration (G+Y+Rc), s	23.4	51.6	23.4	51.6
Change Period (Y+Rc), s	4.5	4.5	4.5	4.5
Max Green Setting (Gmax), s	28.5	52.5	28.5	52.5
Max Q Clear Time (g_c+I1), s	15.5	42.9	15.8	8.6
Green Ext Time (p_c), s	1.7	4.3	3.1	3.3

Intersection Summary	
HCM 6th Ctrl Delay	16.9
HCM 6th LOS	B

Lane Group	EBL	EBT	EBR	WBL	WBT	WBR	NBT	NBR	SBT	SBR
Lane Group Flow (vph)	392	932	68	14	562	153	45	9	114	285
v/c Ratio	0.72	0.40	0.06	0.04	0.24	0.14	0.18	0.03	0.47	0.54
Control Delay	17.1	5.5	1.4	4.5	4.6	1.2	26.7	7.4	32.9	8.1
Queue Delay	0.0	0.0	0.0	0.0	0.0	0.0	0.0	0.0	0.0	0.0
Total Delay	17.1	5.5	1.4	4.5	4.6	1.2	26.7	7.4	32.9	8.1
Queue Length 50th (ft)	75	66	0	1	35	0	16	0	43	0
Queue Length 95th (ft)	#250	128	11	8	71	17	45	8	96	59
Internal Link Dist (ft)		2031			726		424		476	
Turn Bay Length (ft)	485		275	235		275				
Base Capacity (vph)	677	2921	1318	435	2921	1333	645	781	638	918
Starvation Cap Reductn	0	0	0	0	0	0	0	0	0	0
Spillback Cap Reductn	0	0	0	0	0	0	0	0	0	0
Storage Cap Reductn	0	0	0	0	0	0	0	0	0	0
Reduced v/c Ratio	0.58	0.32	0.05	0.03	0.19	0.11	0.07	0.01	0.18	0.31

Intersection Summary

95th percentile volume exceeds capacity, queue may be longer.
Queue shown is maximum after two cycles.

Movement	EBL	EBT	EBR	WBL	WBT	WBR	NBL	NBT	NBR	SBL	SBT	SBR
Lane Configurations												
Traffic Volume (veh/h)	361	857	63	13	517	141	37	5	8	100	5	262
Future Volume (veh/h)	361	857	63	13	517	141	37	5	8	100	5	262
Initial Q (Qb), veh	0	0	0	0	0	0	0	0	0	0	0	0
Ped-Bike Adj(A_pbT)	1.00		1.00	1.00		1.00	1.00		1.00	1.00		1.00
Parking Bus, Adj	1.00	1.00	1.00	1.00	1.00	1.00	1.00	1.00	1.00	1.00	1.00	1.00
Work Zone On Approach		No			No			No			No	
Adj Sat Flow, veh/h/ln	1870	1870	1870	1870	1870	1870	1870	1870	1870	1870	1870	1870
Adj Flow Rate, veh/h	392	932	68	14	562	153	40	5	9	109	5	285
Peak Hour Factor	0.92	0.92	0.92	0.92	0.92	0.92	0.92	0.92	0.92	0.92	0.92	0.92
Percent Heavy Veh, %	2	2	2	2	2	2	2	2	2	2	2	2
Cap, veh/h	452	2073	925	325	2073	925	76	5	502	78	2	502
Arrive On Green	0.58	0.58	0.58	0.58	0.58	0.58	0.32	0.32	0.32	0.32	0.32	0.32
Sat Flow, veh/h	736	3554	1585	563	3554	1585	0	16	1585	0	6	1585
Grp Volume(v), veh/h	392	932	68	14	562	153	45	0	9	114	0	285
Grp Sat Flow(s),veh/h/ln	736	1777	1585	563	1777	1585	16	0	1585	6	0	1585
Q Serve(g_s), s	45.5	13.3	1.7	1.3	7.0	4.0	0.0	0.0	0.4	0.0	0.0	13.5
Cycle Q Clear(g_c), s	52.5	13.3	1.7	14.6	7.0	4.0	28.5	0.0	0.4	28.5	0.0	13.5
Prop In Lane	1.00		1.00	1.00		1.00	0.89		1.00	0.96		1.00
Lane Grp Cap(c), veh/h	452	2073	925	325	2073	925	81	0	502	80	0	502
V/C Ratio(X)	0.87	0.45	0.07	0.04	0.27	0.17	0.56	0.00	0.02	1.42	0.00	0.57
Avail Cap(c_a), veh/h	452	2073	925	325	2073	925	81	0	502	80	0	502
HCM Platoon Ratio	1.00	1.00	1.00	1.00	1.00	1.00	1.00	1.00	1.00	1.00	1.00	1.00
Upstream Filter(I)	1.00	1.00	1.00	1.00	1.00	1.00	1.00	0.00	1.00	1.00	0.00	1.00
Uniform Delay (d), s/veh	23.5	10.6	8.2	14.7	9.3	8.6	41.7	0.0	21.1	44.3	0.0	25.6
Incr Delay (d2), s/veh	16.3	0.2	0.0	0.1	0.1	0.1	8.2	0.0	0.0	248.0	0.0	1.5
Initial Q Delay(d3),s/veh	0.0	0.0	0.0	0.0	0.0	0.0	0.0	0.0	0.0	0.0	0.0	0.0
%ile BackOfQ(50%),veh/ln	10.0	4.8	0.5	0.2	2.5	1.3	1.2	0.0	0.1	7.3	0.0	5.1
Unsig. Movement Delay, s/veh												
LnGrp Delay(d),s/veh	39.8	10.7	8.2	14.8	9.3	8.7	50.0	0.0	21.1	292.3	0.0	27.1
LnGrp LOS	D	B	A	B	A	A	D	A	C	F	A	C
Approach Vol, veh/h		1392			729			54			399	
Approach Delay, s/veh		18.8			9.3			45.2			102.9	
Approach LOS		B			A			D			F	

Timer - Assigned Phs		2		4		6		8				
Phs Duration (G+Y+Rc), s		33.0		57.0		33.0		57.0				
Change Period (Y+Rc), s		4.5		4.5		4.5		4.5				
Max Green Setting (Gmax), s		28.5		52.5		28.5		52.5				
Max Q Clear Time (g_c+I1), s		30.5		54.5		30.5		16.6				
Green Ext Time (p_c), s		0.0		0.0		0.0		5.0				

Intersection Summary												
HCM 6th Ctrl Delay			29.7									
HCM 6th LOS			C									

Lane Group	EBL	EBT	EBR	WBL	WBT	WBR	NBL	NBT	NBR	SBL	SBT	SBR
Lane Group Flow (vph)	190	548	83	27	336	57	35	68	35	53	41	103
v/c Ratio	0.41	0.35	0.11	0.07	0.21	0.08	0.11	0.08	0.09	0.17	0.05	0.23
Control Delay	8.5	5.8	1.8	4.9	5.1	1.9	12.2	11.1	6.2	12.7	11.1	5.2
Queue Delay	0.0	0.0	0.0	0.0	0.0	0.0	0.0	0.0	0.0	0.0	0.0	0.0
Total Delay	8.5	5.8	1.8	4.9	5.1	1.9	12.2	11.1	6.2	12.7	11.1	5.2
Queue Length 50th (ft)	16	23	0	2	13	0	4	4	0	6	2	0
Queue Length 95th (ft)	49	48	11	9	30	9	22	17	15	30	12	26
Internal Link Dist (ft)		2061			2031			426			951	
Turn Bay Length (ft)	325		275	275		275	250		275	250		275
Base Capacity (vph)	920	3185	1433	749	3185	1430	1222	3185	1428	1190	3185	1435
Starvation Cap Reductn	0	0	0	0	0	0	0	0	0	0	0	0
Spillback Cap Reductn	0	0	0	0	0	0	0	0	0	0	0	0
Storage Cap Reductn	0	0	0	0	0	0	0	0	0	0	0	0
Reduced v/c Ratio	0.21	0.17	0.06	0.04	0.11	0.04	0.03	0.02	0.02	0.04	0.01	0.07

Intersection Summary

Movement	EBL	EBT	EBR	WBL	WBT	WBR	NBL	NBT	NBR	SBL	SBT	SBR
Lane Configurations												
Traffic Volume (veh/h)	175	504	76	25	309	52	32	63	32	49	38	95
Future Volume (veh/h)	175	504	76	25	309	52	32	63	32	49	38	95
Initial Q (Qb), veh	0	0	0	0	0	0	0	0	0	0	0	0
Ped-Bike Adj(A_pbT)	1.00		1.00	1.00		1.00	1.00		1.00	1.00		1.00
Parking Bus, Adj	1.00	1.00	1.00	1.00	1.00	1.00	1.00	1.00	1.00	1.00	1.00	1.00
Work Zone On Approach		No			No			No			No	
Adj Sat Flow, veh/h/ln	1870	1870	1870	1870	1870	1870	1870	1870	1870	1870	1870	1870
Adj Flow Rate, veh/h	190	548	83	27	336	57	35	68	35	53	41	103
Peak Hour Factor	0.92	0.92	0.92	0.92	0.92	0.92	0.92	0.92	0.92	0.92	0.92	0.92
Percent Heavy Veh, %	2	2	2	2	2	2	2	2	2	2	2	2
Cap, veh/h	680	1651	736	567	1651	736	502	680	303	502	680	303
Arrive On Green	0.46	0.46	0.46	0.46	0.46	0.46	0.19	0.19	0.19	0.19	0.19	0.19
Sat Flow, veh/h	991	3554	1585	796	3554	1585	1244	3554	1585	1291	3554	1585
Grp Volume(v), veh/h	190	548	83	27	336	57	35	68	35	53	41	103
Grp Sat Flow(s),veh/h/ln	991	1777	1585	796	1777	1585	1244	1777	1585	1291	1777	1585
Q Serve(g_s), s	3.7	2.6	0.8	0.6	1.5	0.5	0.6	0.4	0.5	0.9	0.2	1.5
Cycle Q Clear(g_c), s	5.1	2.6	0.8	3.1	1.5	0.5	0.9	0.4	0.5	1.3	0.2	1.5
Prop In Lane	1.00		1.00	1.00		1.00	1.00		1.00	1.00		1.00
Lane Grp Cap(c), veh/h	680	1651	736	567	1651	736	502	680	303	502	680	303
V/C Ratio(X)	0.28	0.33	0.11	0.05	0.20	0.08	0.07	0.10	0.12	0.11	0.06	0.34
Avail Cap(c_a), veh/h	1281	3806	1698	1050	3806	1698	1596	3806	1698	1638	3806	1698
HCM Platoon Ratio	1.00	1.00	1.00	1.00	1.00	1.00	1.00	1.00	1.00	1.00	1.00	1.00
Upstream Filter(I)	1.00	1.00	1.00	1.00	1.00	1.00	1.00	1.00	1.00	1.00	1.00	1.00
Uniform Delay (d), s/veh	5.7	4.4	4.0	5.4	4.1	3.9	9.0	8.7	8.7	9.3	8.6	9.1
Incr Delay (d2), s/veh	0.2	0.1	0.1	0.0	0.1	0.0	0.1	0.1	0.2	0.1	0.0	0.7
Initial Q Delay(d3),s/veh	0.0	0.0	0.0	0.0	0.0	0.0	0.0	0.0	0.0	0.0	0.0	0.0
%ile BackOfQ(50%),veh/ln	0.4	0.3	0.1	0.1	0.2	0.1	0.1	0.1	0.1	0.2	0.1	0.4
Unsig. Movement Delay, s/veh												
LnGrp Delay(d),s/veh	5.9	4.5	4.0	5.5	4.2	3.9	9.1	8.8	8.9	9.4	8.7	9.8
LnGrp LOS	A	A	A	A	A	A	A	A	A	A	A	A
Approach Vol, veh/h		821			420			138			197	
Approach Delay, s/veh		4.8			4.2			8.9			9.5	
Approach LOS		A			A			A			A	

Timer - Assigned Phs		2		4		6		8				
Phs Duration (G+Y+Rc), s		9.5		16.6		9.5		16.6				
Change Period (Y+Rc), s		4.5		4.5		4.5		4.5				
Max Green Setting (Gmax), s		28.0		28.0		28.0		28.0				
Max Q Clear Time (g_c+I1), s		2.9		7.1		3.5		5.1				
Green Ext Time (p_c), s		0.6		5.0		0.7		2.6				

Intersection Summary												
HCM 6th Ctrl Delay			5.6									
HCM 6th LOS			A									

Lane Group	EBL	EBT	EBR	WBL	WBT	WBR	NBL	NBT	NBR	SBL	SBT	SBR
Lane Group Flow (vph)	241	745	89	54	418	38	204	7	21	9	7	152
v/c Ratio	0.55	0.45	0.11	0.18	0.25	0.05	0.50	0.01	0.04	0.02	0.01	0.27
Control Delay	13.7	8.3	2.4	8.5	7.0	3.0	18.2	12.3	5.6	12.5	12.3	4.5
Queue Delay	0.0	0.0	0.0	0.0	0.0	0.0	0.0	0.0	0.0	0.0	0.0	0.0
Total Delay	13.7	8.3	2.4	8.5	7.0	3.0	18.2	12.3	5.6	12.5	12.3	4.5
Queue Length 50th (ft)	32	48	0	6	24	0	36	1	0	1	1	0
Queue Length 95th (ft)	104	108	16	26	58	11	103	9	10	10	9	32
Internal Link Dist (ft)		1938			2061			478			615	
Turn Bay Length (ft)	300		275	275		250	275		275	275		235
Base Capacity (vph)	705	2642	1204	478	2642	1191	859	1140	980	859	1140	1028
Starvation Cap Reductn	0	0	0	0	0	0	0	0	0	0	0	0
Spillback Cap Reductn	0	0	0	0	0	0	0	0	0	0	0	0
Storage Cap Reductn	0	0	0	0	0	0	0	0	0	0	0	0
Reduced v/c Ratio	0.34	0.28	0.07	0.11	0.16	0.03	0.24	0.01	0.02	0.01	0.01	0.15

Intersection Summary

Movement	EBL	EBT	EBR	WBL	WBT	WBR	NBL	NBT	NBR	SBL	SBT	SBR
Lane Configurations												
Traffic Volume (veh/h)	222	685	82	50	385	35	188	6	19	8	6	140
Future Volume (veh/h)	222	685	82	50	385	35	188	6	19	8	6	140
Initial Q (Qb), veh	0	0	0	0	0	0	0	0	0	0	0	0
Ped-Bike Adj(A_pbT)	1.00		1.00	1.00		1.00	1.00		1.00	1.00		1.00
Parking Bus, Adj	1.00	1.00	1.00	1.00	1.00	1.00	1.00	1.00	1.00	1.00	1.00	1.00
Work Zone On Approach		No			No			No			No	
Adj Sat Flow, veh/h/ln	1870	1870	1870	1870	1870	1870	1870	1870	1870	1870	1870	1870
Adj Flow Rate, veh/h	241	745	89	54	418	38	204	7	21	9	7	152
Peak Hour Factor	0.92	0.92	0.92	0.92	0.92	0.92	0.92	0.92	0.92	0.92	0.92	0.92
Percent Heavy Veh, %	2	2	2	2	2	2	2	2	2	2	2	2
Cap, veh/h	620	1800	803	455	1800	803	491	437	370	527	437	370
Arrive On Green	0.51	0.51	0.51	0.51	0.51	0.51	0.23	0.23	0.23	0.23	0.23	0.23
Sat Flow, veh/h	935	3554	1585	658	3554	1585	1227	1870	1585	1382	1870	1585
Grp Volume(v), veh/h	241	745	89	54	418	38	204	7	21	9	7	152
Grp Sat Flow(s),veh/h/ln	935	1777	1585	658	1777	1585	1227	1870	1585	1382	1870	1585
Q Serve(g_s), s	6.7	4.5	1.0	1.9	2.3	0.4	5.3	0.1	0.4	0.2	0.1	2.8
Cycle Q Clear(g_c), s	9.0	4.5	1.0	6.5	2.3	0.4	5.4	0.1	0.4	0.3	0.1	2.8
Prop In Lane	1.00		1.00	1.00		1.00	1.00		1.00	1.00		1.00
Lane Grp Cap(c), veh/h	620	1800	803	455	1800	803	491	437	370	527	437	370
V/C Ratio(X)	0.39	0.41	0.11	0.12	0.23	0.05	0.42	0.02	0.06	0.02	0.02	0.41
Avail Cap(c_a), veh/h	916	2924	1304	663	2924	1304	1002	1215	1030	1102	1215	1030
HCM Platoon Ratio	1.00	1.00	1.00	1.00	1.00	1.00	1.00	1.00	1.00	1.00	1.00	1.00
Upstream Filter(I)	1.00	1.00	1.00	1.00	1.00	1.00	1.00	1.00	1.00	1.00	1.00	1.00
Uniform Delay (d), s/veh	7.3	5.3	4.5	7.4	4.8	4.3	12.3	10.2	10.3	10.3	10.2	11.3
Incr Delay (d2), s/veh	0.4	0.2	0.1	0.1	0.1	0.0	0.6	0.0	0.1	0.0	0.0	0.7
Initial Q Delay(d3),s/veh	0.0	0.0	0.0	0.0	0.0	0.0	0.0	0.0	0.0	0.0	0.0	0.0
%ile BackOfQ(50%),veh/ln	0.9	0.9	0.2	0.2	0.5	0.1	1.2	0.0	0.1	0.0	0.0	0.8
Unsig. Movement Delay, s/veh												
LnGrp Delay(d),s/veh	7.7	5.5	4.5	7.5	4.8	4.3	12.9	10.2	10.4	10.3	10.2	12.0
LnGrp LOS	A	A	A	A	A	A	B	B	B	B	B	B
Approach Vol, veh/h		1075			510			232			168	
Approach Delay, s/veh		5.9			5.1			12.6			11.8	
Approach LOS		A			A			B			B	

Timer - Assigned Phs		2		4		6		8				
Phs Duration (G+Y+Rc), s		12.6		22.0		12.6		22.0				
Change Period (Y+Rc), s		4.5		4.5		4.5		4.5				
Max Green Setting (Gmax), s		22.5		28.5		22.5		28.5				
Max Q Clear Time (g_c+I1), s		7.4		11.0		4.8		8.5				
Green Ext Time (p_c), s		0.7		6.5		0.5		3.3				

Intersection Summary												
HCM 6th Ctrl Delay			7.0									
HCM 6th LOS			A									

Lane Group	WBL	WBR	NBT	NBR	SBL	SBT
Lane Group Flow (vph)	722	446	1495	1222	752	761
v/c Ratio	1.12	0.52	1.09	0.77	1.22	0.29
Control Delay	118.9	20.4	88.4	3.7	146.6	5.6
Queue Delay	0.0	0.0	0.0	0.0	0.0	0.0
Total Delay	118.9	20.4	88.4	3.7	146.6	5.6
Queue Length 50th (ft)	~332	211	~686	0	~669	90
Queue Length 95th (ft)	#453	305	#825	0	#910	114
Internal Link Dist (ft)	1938		1222			1449
Turn Bay Length (ft)	325			290	1000	
Base Capacity (vph)	643	853	1371	1583	614	2610
Starvation Cap Reductn	0	0	0	0	0	0
Spillback Cap Reductn	0	0	0	0	0	0
Storage Cap Reductn	0	0	0	0	0	0
Reduced v/c Ratio	1.12	0.52	1.09	0.77	1.22	0.29

Intersection Summary

~ Volume exceeds capacity, queue is theoretically infinite.
Queue shown is maximum after two cycles.

95th percentile volume exceeds capacity, queue may be longer.
Queue shown is maximum after two cycles.

Movement	WBL	WBR	NBT	NBR	SBL	SBT
Lane Configurations						
Traffic Volume (veh/h)	664	410	1375	1124	692	700
Future Volume (veh/h)	664	410	1375	1124	692	700
Initial Q (Qb), veh	0	0	0	0	0	0
Ped-Bike Adj(A_pbT)	1.00	1.00		1.00	1.00	
Parking Bus, Adj	1.00	1.00	1.00	1.00	1.00	1.00
Work Zone On Approach	No		No			No
Adj Sat Flow, veh/h/ln	1870	1870	1870	1870	1870	1870
Adj Flow Rate, veh/h	722	446	1495	0	752	761
Peak Hour Factor	0.92	0.92	0.92	0.92	0.92	0.92
Percent Heavy Veh, %	2	2	2	2	2	2
Cap, veh/h	648	793	1377		617	2621
Arrive On Green	0.19	0.19	0.39	0.00	0.31	0.74
Sat Flow, veh/h	3456	1585	3647	1585	1781	3647
Grp Volume(v), veh/h	722	446	1495	0	752	761
Grp Sat Flow(s),veh/h/ln	1728	1585	1777	1585	1781	1777
Q Serve(g_s), s	22.5	22.5	46.5	0.0	37.5	8.6
Cycle Q Clear(g_c), s	22.5	22.5	46.5	0.0	37.5	8.6
Prop In Lane	1.00	1.00		1.00	1.00	
Lane Grp Cap(c), veh/h	648	793	1377		617	2621
V/C Ratio(X)	1.11	0.56	1.09		1.22	0.29
Avail Cap(c_a), veh/h	648	793	1377		617	2621
HCM Platoon Ratio	1.00	1.00	1.00	1.00	1.00	1.00
Upstream Filter(I)	1.00	1.00	1.00	0.00	1.00	1.00
Uniform Delay (d), s/veh	48.7	20.9	36.8	0.0	36.1	5.3
Incr Delay (d2), s/veh	71.0	0.9	51.1	0.0	112.9	0.3
Initial Q Delay(d3),s/veh	0.0	0.0	0.0	0.0	0.0	0.0
%ile BackOfQ(50%),veh/ln	16.0	8.7	29.5	0.0	36.1	2.9
Unsig. Movement Delay, s/veh						
LnGrp Delay(d),s/veh	119.8	21.8	87.8	0.0	149.1	5.5
LnGrp LOS	F	C	F		F	A
Approach Vol, veh/h	1168		1495	A		1513
Approach Delay, s/veh	82.4		87.8			76.9
Approach LOS	F		F			E

Timer - Assigned Phs	1	2				6	8
Phs Duration (G+Y+Rc), s	42.0	51.0				93.0	27.0
Change Period (Y+Rc), s	4.5	4.5				4.5	4.5
Max Green Setting (Gmax), s	37.5	46.5				88.5	22.5
Max Q Clear Time (g_c+I1), s	39.5	48.5				10.6	24.5
Green Ext Time (p_c), s	0.0	0.0				6.5	0.0

Intersection Summary	
HCM 6th Ctrl Delay	82.3
HCM 6th LOS	F

Notes

Unsignalized Delay for [NBR] is excluded from calculations of the approach delay and intersection delay.

Lane Group	EBL	EBT	EBR	WBL	WBT	WBR	NBL	NBT	NBR	SBL	SBT	SBR
Lane Group Flow (vph)	76	1412	165	334	839	486	137	253	532	795	351	71
v/c Ratio	0.46	0.91	0.22	0.97	0.66	0.45	0.59	0.34	0.88	0.94	0.25	0.09
Control Delay	72.1	54.0	5.7	101.2	39.2	7.8	71.6	46.5	52.1	69.6	28.4	3.0
Queue Delay	0.0	0.0	0.0	0.0	0.0	0.0	0.0	0.0	0.0	0.0	0.0	0.0
Total Delay	72.1	54.0	5.7	101.2	39.2	7.8	71.6	46.5	52.1	69.6	28.4	3.0
Queue Length 50th (ft)	34	435	8	153	323	105	61	100	381	353	108	0
Queue Length 95th (ft)	61	500	53	#252	396	175	96	142	#595	#474	147	21
Internal Link Dist (ft)		664			834			2595			1908	
Turn Bay Length (ft)	235		235	275		455	455		455	385		385
Base Capacity (vph)	166	1570	739	345	1277	1092	242	753	604	855	1382	792
Starvation Cap Reductn	0	0	0	0	0	0	0	0	0	0	0	0
Spillback Cap Reductn	0	0	0	0	0	0	0	0	0	0	0	0
Storage Cap Reductn	0	0	0	0	0	0	0	0	0	0	0	0
Reduced v/c Ratio	0.46	0.90	0.22	0.97	0.66	0.45	0.57	0.34	0.88	0.93	0.25	0.09

Intersection Summary

95th percentile volume exceeds capacity, queue may be longer.
Queue shown is maximum after two cycles.

Movement	EBL	EBT	EBR	WBL	WBT	WBR	NBL	NBT	NBR	SBL	SBT	SBR
Lane Configurations												
Traffic Volume (veh/h)	70	1299	152	307	772	447	126	233	489	731	323	65
Future Volume (veh/h)	70	1299	152	307	772	447	126	233	489	731	323	65
Initial Q (Qb), veh	0	0	0	0	0	0	0	0	0	0	0	0
Ped-Bike Adj(A_pbT)	1.00		1.00	1.00		1.00	1.00		1.00	1.00		1.00
Parking Bus, Adj	1.00	1.00	1.00	1.00	1.00	1.00	1.00	1.00	1.00	1.00	1.00	1.00
Work Zone On Approach		No			No			No			No	
Adj Sat Flow, veh/h/ln	1870	1870	1870	1870	1870	1870	1870	1870	1870	1870	1870	1870
Adj Flow Rate, veh/h	76	1412	0	334	839	0	137	253	0	795	351	0
Peak Hour Factor	0.92	0.92	0.92	0.92	0.92	0.92	0.92	0.92	0.92	0.92	0.92	0.92
Percent Heavy Veh, %	2	2	2	2	2	2	2	2	2	2	2	2
Cap, veh/h	120	1553		351	1318		188	761		846	1438	
Arrive On Green	0.03	0.30	0.00	0.10	0.37	0.00	0.05	0.21	0.00	0.24	0.40	0.00
Sat Flow, veh/h	3456	5106	1585	3456	3554	1585	3456	3554	1585	3456	3554	1585
Grp Volume(v), veh/h	76	1412	0	334	839	0	137	253	0	795	351	0
Grp Sat Flow(s),veh/h/ln	1728	1702	1585	1728	1777	1585	1728	1777	1585	1728	1777	1585
Q Serve(g_s), s	2.9	35.4	0.0	12.8	25.9	0.0	5.2	8.0	0.0	30.0	8.7	0.0
Cycle Q Clear(g_c), s	2.9	35.4	0.0	12.8	25.9	0.0	5.2	8.0	0.0	30.0	8.7	0.0
Prop In Lane	1.00		1.00	1.00		1.00	1.00		1.00	1.00		1.00
Lane Grp Cap(c), veh/h	120	1553		351	1318		188	761		846	1438	
V/C Ratio(X)	0.63	0.91		0.95	0.64		0.73	0.33		0.94	0.24	
Avail Cap(c_a), veh/h	169	1593		351	1318		247	761		870	1438	
HCM Platoon Ratio	1.00	1.00	1.00	1.00	1.00	1.00	1.00	1.00	1.00	1.00	1.00	1.00
Upstream Filter(I)	1.00	1.00	0.00	1.00	1.00	0.00	1.00	1.00	0.00	1.00	1.00	0.00
Uniform Delay (d), s/veh	63.4	44.5	0.0	59.5	34.5	0.0	61.9	44.2	0.0	49.3	26.2	0.0
Incr Delay (d2), s/veh	5.4	8.0	0.0	35.7	1.0	0.0	7.4	1.2	0.0	17.4	0.4	0.0
Initial Q Delay(d3),s/veh	0.0	0.0	0.0	0.0	0.0	0.0	0.0	0.0	0.0	0.0	0.0	0.0
%ile BackOfQ(50%),veh/ln	1.4	16.0	0.0	7.3	11.4	0.0	2.5	3.7	0.0	15.0	3.8	0.0
Unsig. Movement Delay, s/veh												
LnGrp Delay(d),s/veh	68.8	52.5	0.0	95.2	35.5	0.0	69.3	45.4	0.0	66.7	26.6	0.0
LnGrp LOS	E	D		F	D		E	D		E	C	
Approach Vol, veh/h		1488	A		1173	A		390	A		1146	A
Approach Delay, s/veh		53.3			52.5			53.8			54.4	
Approach LOS		D			D			D			D	

Timer - Assigned Phs	1	2	3	4	5	6	7	8
Phs Duration (G+Y+Rc), s	37.1	33.0	18.0	45.0	11.7	58.4	9.1	53.9
Change Period (Y+Rc), s	4.5	4.5	4.5	4.5	4.5	4.5	4.5	4.5
Max Green Setting (Gmax), s	33.5	28.5	13.5	41.5	9.5	52.5	6.5	48.5
Max Q Clear Time (g_c+I1), s	32.0	10.0	14.8	37.4	7.2	10.7	4.9	27.9
Green Ext Time (p_c), s	0.6	1.4	0.0	3.1	0.1	2.5	0.0	6.0

Intersection Summary	
HCM 6th Ctrl Delay	53.4
HCM 6th LOS	D

Notes

User approved pedestrian interval to be less than phase max green.

Unsignalized Delay for [NBR, EBR, WBR, SBR] is excluded from calculations of the approach delay and intersection delay.

Lane Group	EBL	EBT	EBR	WBL	WBT	WBR	NBL	NBT	SBL	SBT
Lane Group Flow (vph)	392	932	68	14	562	153	40	14	109	290
v/c Ratio	0.72	0.40	0.06	0.04	0.24	0.14	0.34	0.05	0.44	0.56
Control Delay	16.4	5.3	1.4	4.3	4.4	1.2	34.2	17.5	31.9	8.7
Queue Delay	0.0	0.0	0.0	0.0	0.0	0.0	0.0	0.0	0.0	0.0
Total Delay	16.4	5.3	1.4	4.3	4.4	1.2	34.2	17.5	31.9	8.7
Queue Length 50th (ft)	73	64	0	1	34	0	15	2	41	2
Queue Length 95th (ft)	#234	123	11	8	67	16	45	16	92	63
Internal Link Dist (ft)		2031			726			424		476
Turn Bay Length (ft)	485		275	235		275	235		235	
Base Capacity (vph)	683	2944	1328	440	2944	1342	331	835	687	928
Starvation Cap Reductn	0	0	0	0	0	0	0	0	0	0
Spillback Cap Reductn	0	0	0	0	0	0	0	0	0	0
Storage Cap Reductn	0	0	0	0	0	0	0	0	0	0
Reduced v/c Ratio	0.57	0.32	0.05	0.03	0.19	0.11	0.12	0.02	0.16	0.31

Intersection Summary

95th percentile volume exceeds capacity, queue may be longer.
Queue shown is maximum after two cycles.

Movement	EBL	EBT	EBR	WBL	WBT	WBR	NBL	NBT	NBR	SBL	SBT	SBR
Lane Configurations												
Traffic Volume (veh/h)	361	857	63	13	517	141	37	5	8	100	5	262
Future Volume (veh/h)	361	857	63	13	517	141	37	5	8	100	5	262
Initial Q (Qb), veh	0	0	0	0	0	0	0	0	0	0	0	0
Ped-Bike Adj(A_pbT)	1.00		1.00	1.00		1.00	1.00		1.00	1.00		1.00
Parking Bus, Adj	1.00	1.00	1.00	1.00	1.00	1.00	1.00	1.00	1.00	1.00	1.00	1.00
Work Zone On Approach		No			No			No			No	
Adj Sat Flow, veh/h/ln	1870	1870	1870	1870	1870	1870	1870	1870	1870	1870	1870	1870
Adj Flow Rate, veh/h	392	932	68	14	562	153	40	5	9	109	5	285
Peak Hour Factor	0.92	0.92	0.92	0.92	0.92	0.92	0.92	0.92	0.92	0.92	0.92	0.92
Percent Heavy Veh, %	2	2	2	2	2	2	2	2	2	2	2	2
Cap, veh/h	522	2302	1027	389	2302	1027	163	140	252	413	6	366
Arrive On Green	0.65	0.65	0.65	0.65	0.65	0.65	0.23	0.23	0.23	0.23	0.23	0.23
Sat Flow, veh/h	736	3554	1585	563	3554	1585	1089	599	1078	1400	27	1562
Grp Volume(v), veh/h	392	932	68	14	562	153	40	0	14	109	0	290
Grp Sat Flow(s),veh/h/ln	736	1777	1585	563	1777	1585	1089	0	1676	1400	0	1589
Q Serve(g_s), s	36.4	9.5	1.2	0.9	5.0	2.9	2.7	0.0	0.5	5.0	0.0	13.0
Cycle Q Clear(g_c), s	41.4	9.5	1.2	10.5	5.0	2.9	15.8	0.0	0.5	5.5	0.0	13.0
Prop In Lane	1.00		1.00	1.00		1.00	1.00		0.64	1.00		0.98
Lane Grp Cap(c), veh/h	522	2302	1027	389	2302	1027	163	0	393	413	0	372
V/C Ratio(X)	0.75	0.40	0.07	0.04	0.24	0.15	0.24	0.00	0.04	0.26	0.00	0.78
Avail Cap(c_a), veh/h	553	2447	1092	412	2447	1092	315	0	627	609	0	594
HCM Platoon Ratio	1.00	1.00	1.00	1.00	1.00	1.00	1.00	1.00	1.00	1.00	1.00	1.00
Upstream Filter(I)	1.00	1.00	1.00	1.00	1.00	1.00	1.00	0.00	1.00	1.00	0.00	1.00
Uniform Delay (d), s/veh	14.3	6.4	4.9	8.9	5.6	5.2	34.7	0.0	22.5	24.7	0.0	27.3
Incr Delay (d2), s/veh	5.4	0.1	0.0	0.0	0.1	0.1	0.8	0.0	0.0	0.3	0.0	3.6
Initial Q Delay(d3),s/veh	0.0	0.0	0.0	0.0	0.0	0.0	0.0	0.0	0.0	0.0	0.0	0.0
%ile BackOfQ(50%),veh/ln	5.8	2.9	0.3	0.1	1.5	0.8	0.7	0.0	0.2	1.6	0.0	5.1
Unsig. Movement Delay, s/veh												
LnGrp Delay(d),s/veh	19.7	6.5	5.0	8.9	5.7	5.3	35.5	0.0	22.6	25.0	0.0	30.9
LnGrp LOS	B	A	A	A	A	A	D	A	C	C	A	C
Approach Vol, veh/h		1392			729			54			399	
Approach Delay, s/veh		10.1			5.7			32.1			29.3	
Approach LOS		B			A			C			C	

Timer - Assigned Phs	2	4	6	8
Phs Duration (G+Y+Rc), s	22.3	53.9	22.3	53.9
Change Period (Y+Rc), s	4.5	4.5	4.5	4.5
Max Green Setting (Gmax), s	28.5	52.5	28.5	52.5
Max Q Clear Time (g_c+I1), s	17.8	43.4	15.0	12.5
Green Ext Time (p_c), s	0.1	6.0	1.8	5.1

Intersection Summary	
HCM 6th Ctrl Delay	12.3
HCM 6th LOS	B

Appendix G

2040 TOTAL TRAFFIC LEVEL OF SERVICE OUTPUT

Lane Group	EBL	EBT	EBR	WBL	WBT	WBR	NBL	NBT	NBR	SBL	SBT	SBR
Lane Group Flow (vph)	182	120	15	482	168	209	48	550	296	205	517	57
v/c Ratio	0.61	0.35	0.05	0.94	0.22	0.42	0.12	0.44	0.40	0.46	0.32	0.07
Control Delay	30.3	39.6	0.3	53.1	28.8	7.1	11.9	23.2	4.5	14.9	16.6	0.2
Queue Delay	0.0	0.0	0.0	0.0	0.0	0.0	0.0	0.0	0.0	0.0	0.0	0.0
Total Delay	30.3	39.6	0.3	53.1	28.8	7.1	11.9	23.2	4.5	14.9	16.6	0.2
Queue Length 50th (ft)	69	33	0	226	40	0	12	120	0	57	99	0
Queue Length 95th (ft)	119	60	0	#366	67	54	30	174	53	101	144	0
Internal Link Dist (ft)		911			760			1157			1874	
Turn Bay Length (ft)	235		450	200		400	700		600			490
Base Capacity (vph)	304	1489	773	520	1919	954	407	1246	749	467	1622	802
Starvation Cap Reductn	0	0	0	0	0	0	0	0	0	0	0	0
Spillback Cap Reductn	0	0	0	0	0	0	0	0	0	0	0	0
Storage Cap Reductn	0	0	0	0	0	0	0	0	0	0	0	0
Reduced v/c Ratio	0.60	0.08	0.02	0.93	0.09	0.22	0.12	0.44	0.40	0.44	0.32	0.07

Intersection Summary

95th percentile volume exceeds capacity, queue may be longer.
Queue shown is maximum after two cycles.

Movement	EBL	EBT	EBR	WBL	WBT	WBR	NBL	NBT	NBR	SBL	SBT	SBR
Lane Configurations												
Traffic Volume (veh/h)	167	74	14	200	110	55	44	506	41	84	476	52
Future Volume (veh/h)	167	110	14	443	155	192	44	506	272	189	476	52
Initial Q (Qb), veh	0	0	0	0	0	0	0	0	0	0	0	0
Ped-Bike Adj(A_pbT)	1.00		1.00	1.00		1.00	1.00		1.00	1.00		1.00
Parking Bus, Adj	1.00	1.00	1.00	1.00	1.00	1.00	1.00	1.00	1.00	1.00	1.00	1.00
Work Zone On Approach		No			No			No			No	
Adj Sat Flow, veh/h/ln	1870	1870	1870	1870	1870	1870	1870	1870	1870	1870	1870	1870
Adj Flow Rate, veh/h	182	120	0	482	168	0	48	550	0	205	517	0
Peak Hour Factor	0.92	0.92	0.92	0.92	0.92	0.92	0.92	0.92	0.92	0.92	0.92	0.92
Percent Heavy Veh, %	2	2	2	2	2	2	2	2	2	2	2	2
Cap, veh/h	363	233		549	680		464	1386		487	1565	
Arrive On Green	0.11	0.07	0.00	0.24	0.19	0.00	0.04	0.39	0.00	0.09	0.44	0.00
Sat Flow, veh/h	1781	3554	1585	1781	3554	1585	1781	3554	1585	1781	3554	1585
Grp Volume(v), veh/h	182	120	0	482	168	0	48	550	0	205	517	0
Grp Sat Flow(s),veh/h/ln	1781	1777	1585	1781	1777	1585	1781	1777	1585	1781	1777	1585
Q Serve(g_s), s	7.8	2.7	0.0	19.5	3.3	0.0	1.3	9.2	0.0	5.4	7.9	0.0
Cycle Q Clear(g_c), s	7.8	2.7	0.0	19.5	3.3	0.0	1.3	9.2	0.0	5.4	7.9	0.0
Prop In Lane	1.00		1.00	1.00		1.00	1.00		1.00	1.00		1.00
Lane Grp Cap(c), veh/h	363	233		549	680		464	1386		487	1565	
V/C Ratio(X)	0.50	0.51		0.88	0.25		0.10	0.40		0.42	0.33	
Avail Cap(c_a), veh/h	363	1548		549	1995		502	1386		573	1565	
HCM Platoon Ratio	1.00	1.00	1.00	1.00	1.00	1.00	1.00	1.00	1.00	1.00	1.00	1.00
Upstream Filter(I)	1.00	1.00	0.00	1.00	1.00	0.00	1.00	1.00	0.00	1.00	1.00	0.00
Uniform Delay (d), s/veh	31.3	37.3	0.0	26.2	28.4	0.0	13.9	18.2	0.0	12.6	15.2	0.0
Incr Delay (d2), s/veh	1.1	1.8	0.0	14.9	0.2	0.0	0.1	0.9	0.0	0.6	0.6	0.0
Initial Q Delay(d3),s/veh	0.0	0.0	0.0	0.0	0.0	0.0	0.0	0.0	0.0	0.0	0.0	0.0
%ile BackOfQ(50%),veh/ln	3.3	1.2	0.0	10.6	1.4	0.0	0.5	3.8	0.0	2.1	3.1	0.0
Unsig. Movement Delay, s/veh												
LnGrp Delay(d),s/veh	32.4	39.1	0.0	41.2	28.6	0.0	14.0	19.1	0.0	13.2	15.7	0.0
LnGrp LOS	C	D		D	C		B	B		B	B	
Approach Vol, veh/h		302	A		650	A		598	A		722	A
Approach Delay, s/veh		35.0			37.9			18.6			15.0	
Approach LOS		D			D			B			B	

Timer - Assigned Phs	1	2	3	4	5	6	7	8
Phs Duration (G+Y+Rc), s	12.0	36.7	24.0	9.9	7.8	40.9	13.6	20.3
Change Period (Y+Rc), s	4.5	4.5	4.5	4.5	4.5	4.5	4.5	4.5
Max Green Setting (Gmax), s	11.5	30.0	19.5	36.0	5.1	36.4	9.1	46.4
Max Q Clear Time (g_c+I1), s	7.4	11.2	21.5	4.7	3.3	9.9	9.8	5.3
Green Ext Time (p_c), s	0.2	3.6	0.0	0.7	0.0	3.7	0.0	1.1

Intersection Summary	
HCM 6th Ctrl Delay	25.2
HCM 6th LOS	C

Notes

Unsignalized Delay for [NBR, EBR, WBR, SBR] is excluded from calculations of the approach delay and intersection delay.

Intersection	
Int Delay, s/veh	0.3

Movement	EBT	EBR	WBL	WBT	NBL	NBR
Lane Configurations						
Traffic Vol, veh/h	161	13	2	315	19	3
Future Vol, veh/h	533	13	2	740	19	3
Conflicting Peds, #/hr	0	0	0	0	0	0
Sign Control	Free	Free	Free	Free	Stop	Stop
RT Channelized	-	None	-	None	-	None
Storage Length	-	235	235	-	0	-
Veh in Median Storage, #	0	-	-	0	0	-
Grade, %	0	-	-	0	0	-
Peak Hour Factor	92	92	92	92	92	92
Heavy Vehicles, %	2	2	2	2	2	2
Mvmt Flow	579	14	2	804	21	3

Major/Minor	Major1		Major2		Minor1	
Conflicting Flow All	0	0	593	0	985	290
Stage 1	-	-	-	-	579	-
Stage 2	-	-	-	-	406	-
Critical Hdwy	-	-	4.14	-	6.84	6.94
Critical Hdwy Stg 1	-	-	-	-	5.84	-
Critical Hdwy Stg 2	-	-	-	-	5.84	-
Follow-up Hdwy	-	-	2.22	-	3.52	3.32
Pot Cap-1 Maneuver	-	-	979	-	245	707
Stage 1	-	-	-	-	524	-
Stage 2	-	-	-	-	641	-
Platoon blocked, %	-	-		-		
Mov Cap-1 Maneuver	-	-	979	-	245	707
Mov Cap-2 Maneuver	-	-	-	-	245	-
Stage 1	-	-	-	-	524	-
Stage 2	-	-	-	-	640	-

Approach	EB	WB	NB
HCM Control Delay, s	0	0	19.7
HCM LOS			C

Minor Lane/Major Mvmt	NBLn1	EBT	EBR	WBL	WBT
Capacity (veh/h)	269	-	-	979	-
HCM Lane V/C Ratio	0.089	-	-	0.002	-
HCM Control Delay (s)	19.7	-	-	8.7	-
HCM Lane LOS	C	-	-	A	-
HCM 95th %tile Q(veh)	0.3	-	-	0	-

Lane Group	EBL	EBT	EBR	WBL	WBT	WBR	NBL	NBT	NBR	SBL	SBT	SBR
Lane Group Flow (vph)	80	438	121	437	1204	633	178	628	187	250	598	79
v/c Ratio	0.50	0.32	0.17	0.84	0.91	0.72	0.58	0.62	0.23	0.58	0.52	0.11
Control Delay	62.5	32.8	2.5	59.9	43.9	21.9	55.5	37.1	7.2	50.2	32.0	2.5
Queue Delay	0.0	0.0	0.0	0.0	0.0	0.0	0.0	0.0	0.0	0.0	0.0	0.0
Total Delay	62.5	32.8	2.5	59.9	43.9	21.9	55.5	37.1	7.2	50.2	32.0	2.5
Queue Length 50th (ft)	28	90	0	155	416	287	62	202	24	86	181	0
Queue Length 95th (ft)	54	122	23	#230	#550	411	100	272	67	126	237	18
Internal Link Dist (ft)		664			834			1448			1908	
Turn Bay Length (ft)	225		100				455		455	385		385
Base Capacity (vph)	159	1382	729	542	1358	917	330	1021	835	511	1149	713
Starvation Cap Reductn	0	0	0	0	0	0	0	0	0	0	0	0
Spillback Cap Reductn	0	0	0	0	0	0	0	0	0	0	0	0
Storage Cap Reductn	0	0	0	0	0	0	0	0	0	0	0	0
Reduced v/c Ratio	0.50	0.32	0.17	0.81	0.89	0.69	0.54	0.62	0.22	0.49	0.52	0.11

Intersection Summary

95th percentile volume exceeds capacity, queue may be longer.
Queue shown is maximum after two cycles.

Movement	EBL	EBT	EBR	WBL	WBT	WBR	NBL	NBT	NBR	SBL	SBT	SBR
Lane Configurations												
Traffic Volume (veh/h)	38	390	51	391	1099	582	164	541	160	230	520	45
Future Volume (veh/h)	74	403	111	402	1108	582	164	578	172	230	550	73
Initial Q (Qb), veh	0	0	0	0	0	0	0	0	0	0	0	0
Ped-Bike Adj(A_pbT)	1.00		1.00	1.00		1.00	1.00		1.00	1.00		1.00
Parking Bus, Adj	1.00	1.00	1.00	1.00	1.00	1.00	1.00	1.00	1.00	1.00	1.00	1.00
Work Zone On Approach		No			No			No			No	
Adj Sat Flow, veh/h/ln	1870	1870	1870	1870	1870	1870	1870	1870	1870	1870	1870	1870
Adj Flow Rate, veh/h	80	438	0	437	1204	0	178	628	0	250	598	0
Peak Hour Factor	0.92	0.92	0.92	0.92	0.92	0.92	0.92	0.92	0.92	0.92	0.92	0.92
Percent Heavy Veh, %	2	2	2	2	2	2	2	2	2	2	2	2
Cap, veh/h	149	1397		506	1339		244	1113		325	1196	
Arrive On Green	0.04	0.27	0.00	0.15	0.38	0.00	0.07	0.31	0.00	0.09	0.34	0.00
Sat Flow, veh/h	3456	5106	1585	3456	3554	1585	3456	3554	1585	3456	3554	1585
Grp Volume(v), veh/h	80	438	0	437	1204	0	178	628	0	250	598	0
Grp Sat Flow(s),veh/h/ln	1728	1702	1585	1728	1777	1585	1728	1777	1585	1728	1777	1585
Q Serve(g_s), s	2.4	7.1	0.0	12.9	33.3	0.0	5.3	15.4	0.0	7.4	14.0	0.0
Cycle Q Clear(g_c), s	2.4	7.1	0.0	12.9	33.3	0.0	5.3	15.4	0.0	7.4	14.0	0.0
Prop In Lane	1.00		1.00	1.00		1.00	1.00		1.00	1.00		1.00
Lane Grp Cap(c), veh/h	149	1397		506	1339		244	1113		325	1196	
V/C Ratio(X)	0.54	0.31		0.86	0.90		0.73	0.56		0.77	0.50	
Avail Cap(c_a), veh/h	166	1439		567	1414		345	1113		533	1196	
HCM Platoon Ratio	1.00	1.00	1.00	1.00	1.00	1.00	1.00	1.00	1.00	1.00	1.00	1.00
Upstream Filter(I)	1.00	1.00	0.00	1.00	1.00	0.00	1.00	1.00	0.00	1.00	1.00	0.00
Uniform Delay (d), s/veh	48.9	30.1	0.0	43.5	30.6	0.0	47.5	29.9	0.0	46.1	27.6	0.0
Incr Delay (d2), s/veh	3.0	0.1	0.0	12.0	7.8	0.0	4.6	2.1	0.0	3.8	1.5	0.0
Initial Q Delay(d3),s/veh	0.0	0.0	0.0	0.0	0.0	0.0	0.0	0.0	0.0	0.0	0.0	0.0
%ile BackOfQ(50%),veh/ln	1.1	2.9	0.0	6.3	15.3	0.0	2.4	6.8	0.0	3.3	6.1	0.0
Unsig. Movement Delay, s/veh												
LnGrp Delay(d),s/veh	51.8	30.2	0.0	55.5	38.4	0.0	52.1	32.0	0.0	49.9	29.1	0.0
LnGrp LOS	D	C		E	D		D	C		D	C	
Approach Vol, veh/h		518	A		1641	A		806	A		848	A
Approach Delay, s/veh		33.6			43.0			36.4			35.2	
Approach LOS		C			D			D			D	

Timer - Assigned Phs	1	2	3	4	5	6	7	8
Phs Duration (G+Y+Rc), s	14.3	37.2	19.8	33.0	11.9	39.6	9.0	43.8
Change Period (Y+Rc), s	4.5	4.5	4.5	4.5	4.5	4.5	4.5	4.5
Max Green Setting (Gmax), s	16.1	29.4	17.1	29.4	10.4	35.1	5.0	41.5
Max Q Clear Time (g_c+I1), s	9.4	17.4	14.9	9.1	7.3	16.0	4.4	35.3
Green Ext Time (p_c), s	0.5	3.4	0.4	2.9	0.2	3.9	0.0	4.0

Intersection Summary	
HCM 6th Ctrl Delay	38.6
HCM 6th LOS	D

Notes

Unsignalized Delay for [NBR, EBR, WBR, SBR] is excluded from calculations of the approach delay and intersection delay.

Lane Group	EBL	EBT	WBL	WBT	NBL	NBT	NBR	SBL	SBT	SBR
Lane Group Flow (vph)	49	87	400	162	157	714	128	35	999	23
v/c Ratio	0.30	0.31	0.73	0.32	0.44	0.34	0.13	0.13	0.73	0.03
Control Delay	32.2	13.9	29.6	6.7	10.9	7.4	1.8	14.3	20.0	0.1
Queue Delay	0.0	0.0	0.0	0.0	0.0	0.0	0.0	0.0	0.0	0.0
Total Delay	32.2	13.9	29.6	6.7	10.9	7.4	1.8	14.3	20.0	0.1
Queue Length 50th (ft)	18	6	66	3	25	67	0	9	170	0
Queue Length 95th (ft)	50	44	112	44	57	109	19	27	252	0
Internal Link Dist (ft)		818		800		2717			1066	
Turn Bay Length (ft)			250		250		250	400		200
Base Capacity (vph)	579	816	546	1077	362	2554	1178	370	1849	888
Starvation Cap Reductn	0	0	0	0	0	0	0	0	0	0
Spillback Cap Reductn	0	0	0	0	0	0	0	0	0	0
Storage Cap Reductn	0	0	0	0	0	0	0	0	0	0
Reduced v/c Ratio	0.08	0.11	0.73	0.15	0.43	0.28	0.11	0.09	0.54	0.03

Intersection Summary

Movement	EBL	EBT	EBR	WBL	WBT	WBR	NBL	NBT	NBR	SBL	SBT	SBR
Lane Configurations												
Traffic Volume (veh/h)	0	0	0	400	0	151	0	714	128	35	927	0
Future Volume (veh/h)	49	18	69	400	11	151	157	714	128	35	999	23
Initial Q (Qb), veh	0	0	0	0	0	0	0	0	0	0	0	0
Ped-Bike Adj(A_pbT)	1.00		1.00	1.00		1.00	1.00		1.00	1.00		1.00
Parking Bus, Adj	1.00	1.00	1.00	1.00	1.00	1.00	1.00	1.00	1.00	1.00	1.00	1.00
Work Zone On Approach		No			No			No			No	
Adj Sat Flow, veh/h/ln	1870	1870	1870	1870	1870	1870	1870	1870	1870	1870	1870	1870
Adj Flow Rate, veh/h	49	18	69	400	11	151	157	714	128	35	999	23
Peak Hour Factor	1.00	1.00	1.00	1.00	1.00	1.00	1.00	1.00	1.00	1.00	1.00	1.00
Percent Heavy Veh, %	2	2	2	2	2	2	2	2	2	2	2	2
Cap, veh/h	254	33	127	718	30	414	365	1972	880	387	1375	613
Arrive On Green	0.10	0.10	0.10	0.10	0.28	0.28	0.08	0.55	0.55	0.39	0.39	0.39
Sat Flow, veh/h	1224	339	1298	3456	109	1493	1781	3554	1585	653	3554	1585
Grp Volume(v), veh/h	49	0	87	400	0	162	157	714	128	35	999	23
Grp Sat Flow(s),veh/h/ln	1224	0	1637	1728	0	1602	1781	1777	1585	653	1777	1585
Q Serve(g_s), s	2.0	0.0	2.7	5.1	0.0	4.4	2.5	6.0	2.1	1.9	12.9	0.5
Cycle Q Clear(g_c), s	2.0	0.0	2.7	5.1	0.0	4.4	2.5	6.0	2.1	1.9	12.9	0.5
Prop In Lane	1.00		0.79	1.00		0.93	1.00		1.00	1.00		1.00
Lane Grp Cap(c), veh/h	254	0	161	718	0	444	365	1972	880	387	1375	613
V/C Ratio(X)	0.19	0.00	0.54	0.56	0.00	0.36	0.43	0.36	0.15	0.09	0.73	0.04
Avail Cap(c_a), veh/h	773	0	855	718	0	1123	484	2876	1283	510	2041	910
HCM Platoon Ratio	1.00	1.00	1.00	1.00	1.00	1.00	1.00	1.00	1.00	1.00	1.00	1.00
Upstream Filter(I)	1.00	0.00	1.00	1.00	0.00	1.00	1.00	1.00	1.00	1.00	1.00	1.00
Uniform Delay (d), s/veh	22.7	0.0	23.0	18.4	0.0	15.6	10.0	6.6	5.8	10.7	14.0	10.2
Incr Delay (d2), s/veh	0.4	0.0	2.8	1.0	0.0	0.5	0.8	0.1	0.1	0.1	0.7	0.0
Initial Q Delay(d3),s/veh	0.0	0.0	0.0	0.0	0.0	0.0	0.0	0.0	0.0	0.0	0.0	0.0
%ile BackOfQ(50%),veh/ln	0.6	0.0	1.1	2.0	0.0	1.5	0.6	1.2	0.5	0.2	3.7	0.1
Unsig. Movement Delay, s/veh												
LnGrp Delay(d),s/veh	23.1	0.0	25.9	19.4	0.0	16.1	10.8	6.8	5.9	10.8	14.8	10.3
LnGrp LOS	C	A	C	B	A	B	B	A	A	B	B	B
Approach Vol, veh/h		136			562			999			1057	
Approach Delay, s/veh		24.9			18.4			7.3			14.5	
Approach LOS		C			B			A			B	

Timer - Assigned Phs		2	3	4	5	6		8				
Phs Duration (G+Y+Rc), s		34.3	9.6	9.8	9.0	25.2		19.4				
Change Period (Y+Rc), s		4.5	4.5	4.5	4.5	4.5		4.5				
Max Green Setting (Gmax), s		43.4	5.1	28.0	8.1	30.8		37.6				
Max Q Clear Time (g_c+I1), s		8.0	7.1	4.7	4.5	14.9		6.4				
Green Ext Time (p_c), s		5.1	0.0	0.6	0.1	5.9		1.0				

Intersection Summary	
HCM 6th Ctrl Delay	13.2
HCM 6th LOS	B

Lane Group	EBL	EBT	EBR	WBL	WBT	WBR	NBL	NBT	NBR	SBL	SBT	SBR
Lane Group Flow (vph)	352	230	83	136	413	145	150	409	27	45	249	604
v/c Ratio	0.64	0.12	0.09	0.43	0.42	0.27	0.50	0.42	0.05	0.18	0.26	0.64
Control Delay	30.2	6.8	2.5	20.4	16.3	4.8	21.9	16.2	0.2	16.2	14.9	9.0
Queue Delay	0.0	0.0	0.0	0.0	0.0	0.0	0.0	0.0	0.0	0.0	0.0	0.0
Total Delay	30.2	6.8	2.5	20.4	16.3	4.8	21.9	16.2	0.2	16.2	14.9	9.0
Queue Length 50th (ft)	45	13	0	29	46	0	33	46	0	9	26	52
Queue Length 95th (ft)	#151	40	18	86	100	33	93	97	0	34	62	194
Internal Link Dist (ft)		726			925			690			2070	
Turn Bay Length (ft)	300		275	300		275	300		275	300		500
Base Capacity (vph)	552	2969	1341	680	2124	1008	739	2352	1079	621	2352	950
Starvation Cap Reductn	0	0	0	0	0	0	0	0	0	0	0	0
Spillback Cap Reductn	0	0	0	0	0	0	0	0	0	0	0	0
Storage Cap Reductn	0	0	0	0	0	0	0	0	0	0	0	0
Reduced v/c Ratio	0.64	0.08	0.06	0.20	0.19	0.14	0.20	0.17	0.03	0.07	0.11	0.64

Intersection Summary

95th percentile volume exceeds capacity, queue may be longer.
Queue shown is maximum after two cycles.

Movement	EBL	EBT	EBR	WBL	WBT	WBR	NBL	NBT	NBR	SBL	SBT	SBR
Lane Configurations												
Traffic Volume (veh/h)	199	202	55	125	375	125	127	352	25	26	205	454
Future Volume (veh/h)	324	212	76	125	380	133	138	376	25	41	229	556
Initial Q (Qb), veh	0	0	0	0	0	0	0	0	0	0	0	0
Ped-Bike Adj(A_pbT)	1.00		1.00	1.00		1.00	1.00		1.00	1.00		1.00
Parking Bus, Adj	1.00	1.00	1.00	1.00	1.00	1.00	1.00	1.00	1.00	1.00	1.00	1.00
Work Zone On Approach		No			No			No			No	
Adj Sat Flow, veh/h/ln	1870	1870	1870	1870	1870	1870	1870	1870	1870	1870	1870	1870
Adj Flow Rate, veh/h	352	230	83	136	413	145	150	409	27	45	249	604
Peak Hour Factor	0.92	0.92	0.92	0.92	0.92	0.92	0.92	0.92	0.92	0.92	0.92	0.92
Percent Heavy Veh, %	2	2	2	2	2	2	2	2	2	2	2	2
Cap, veh/h	466	1559	696	368	784	350	359	1403	626	434	1403	840
Arrive On Green	0.13	0.44	0.44	0.22	0.22	0.22	0.39	0.39	0.39	0.39	0.39	0.39
Sat Flow, veh/h	3456	3554	1585	1067	3554	1585	647	3554	1585	953	3554	1585
Grp Volume(v), veh/h	352	230	83	136	413	145	150	409	27	45	249	604
Grp Sat Flow(s),veh/h/ln	1728	1777	1585	1067	1777	1585	647	1777	1585	953	1777	1585
Q Serve(g_s), s	5.3	2.1	1.7	6.2	5.5	4.2	10.6	4.3	0.6	1.8	2.5	15.7
Cycle Q Clear(g_c), s	5.3	2.1	1.7	6.2	5.5	4.2	13.1	4.3	0.6	6.1	2.5	15.7
Prop In Lane	1.00		1.00	1.00		1.00	1.00		1.00	1.00		1.00
Lane Grp Cap(c), veh/h	466	1559	696	368	784	350	359	1403	626	434	1403	840
V/C Ratio(X)	0.75	0.15	0.12	0.37	0.53	0.41	0.42	0.29	0.04	0.10	0.18	0.72
Avail Cap(c_a), veh/h	479	2629	1173	686	1841	821	475	2038	909	604	2038	1123
HCM Platoon Ratio	1.00	1.00	1.00	1.00	1.00	1.00	1.00	1.00	1.00	1.00	1.00	1.00
Upstream Filter(I)	1.00	1.00	1.00	1.00	1.00	1.00	1.00	1.00	1.00	1.00	1.00	1.00
Uniform Delay (d), s/veh	22.5	9.1	9.0	18.8	18.6	18.1	14.9	11.2	10.1	13.3	10.6	9.7
Incr Delay (d2), s/veh	6.5	0.0	0.1	0.6	0.6	0.8	0.8	0.1	0.0	0.1	0.1	1.5
Initial Q Delay(d3),s/veh	0.0	0.0	0.0	0.0	0.0	0.0	0.0	0.0	0.0	0.0	0.0	0.0
%ile BackOfQ(50%),veh/ln	2.4	0.7	0.5	1.4	2.1	1.5	1.4	1.5	0.2	0.4	0.8	4.4
Unsig. Movement Delay, s/veh												
LnGrp Delay(d),s/veh	29.1	9.1	9.1	19.4	19.1	18.9	15.7	11.3	10.1	13.4	10.7	11.2
LnGrp LOS	C	A	A	B	B	B	B	B	B	B	B	B
Approach Vol, veh/h		665			694			586			898	
Approach Delay, s/veh		19.7			19.1			12.4			11.1	
Approach LOS		B			B			B			B	

Timer - Assigned Phs		2		4		6	7	8
Phs Duration (G+Y+Rc), s		25.8		28.2		25.8	11.8	16.4
Change Period (Y+Rc), s		4.5		4.5		4.5	4.5	4.5
Max Green Setting (Gmax), s		31.0		40.0		31.0	7.5	28.0
Max Q Clear Time (g_c+I1), s		15.1		4.1		17.7	7.3	8.2
Green Ext Time (p_c), s		3.8		1.8		3.7	0.0	3.8

Intersection Summary			
HCM 6th Ctrl Delay			15.3
HCM 6th LOS			B

Lane Group	EBL	EBT	EBR	WBL	WBT	WBR	NBL	NBT	SBL	SBT
Lane Group Flow (vph)	151	535	21	4	1101	61	61	15	117	420
v/c Ratio	0.61	0.27	0.02	0.01	0.77	0.09	0.27	0.04	0.30	0.76
Control Delay	25.1	10.7	0.1	17.0	24.7	0.2	18.2	11.8	18.3	20.7
Queue Delay	0.0	0.0	0.0	0.0	0.0	0.0	0.0	0.0	0.0	0.0
Total Delay	25.1	10.7	0.1	17.0	24.7	0.2	18.2	11.8	18.3	20.7
Queue Length 50th (ft)	31	62	0	1	214	0	18	1	36	75
Queue Length 95th (ft)	#116	128	0	8	#416	0	40	14	68	173
Internal Link Dist (ft)		2031			726			424		524
Turn Bay Length (ft)	485		275	235		275	235		235	
Base Capacity (vph)	249	2104	972	376	1578	780	230	730	391	837
Starvation Cap Reductn	0	0	0	0	0	0	0	0	0	0
Spillback Cap Reductn	0	0	0	0	0	0	0	0	0	0
Storage Cap Reductn	0	0	0	0	0	0	0	0	0	0
Reduced v/c Ratio	0.61	0.25	0.02	0.01	0.70	0.08	0.27	0.02	0.30	0.50

Intersection Summary

95th percentile volume exceeds capacity, queue may be longer.
Queue shown is maximum after two cycles.

Movement	EBL	EBT	EBR	WBL	WBT	WBR	NBL	NBT	NBR	SBL	SBT	SBR
Lane Configurations												
Traffic Volume (veh/h)	116	367	19	4	911	40	56	2	12	77	2	296
Future Volume (veh/h)	139	492	19	4	1013	56	56	2	12	108	2	385
Initial Q (Qb), veh	0	0	0	0	0	0	0	0	0	0	0	0
Ped-Bike Adj(A_pbT)	1.00		1.00	1.00		1.00	1.00		1.00	1.00		1.00
Parking Bus, Adj	1.00	1.00	1.00	1.00	1.00	1.00	1.00	1.00	1.00	1.00	1.00	1.00
Work Zone On Approach		No			No			No			No	
Adj Sat Flow, veh/h/ln	1870	1870	1870	1870	1870	1870	1870	1870	1870	1870	1870	1870
Adj Flow Rate, veh/h	151	535	21	4	1101	61	61	2	13	117	2	418
Peak Hour Factor	0.92	0.92	0.92	0.92	0.92	0.92	0.92	0.92	0.92	0.92	0.92	0.92
Percent Heavy Veh, %	2	2	2	2	2	2	2	2	2	2	2	2
Cap, veh/h	240	1694	756	395	1253	559	224	61	395	595	2	473
Arrive On Green	0.07	0.48	0.48	0.35	0.35	0.35	0.05	0.28	0.28	0.07	0.30	0.30
Sat Flow, veh/h	1781	3554	1585	853	3554	1585	1781	216	1402	1781	8	1579
Grp Volume(v), veh/h	151	535	21	4	1101	61	61	0	15	117	0	420
Grp Sat Flow(s),veh/h/ln	1781	1777	1585	853	1777	1585	1781	0	1618	1781	0	1586
Q Serve(g_s), s	3.9	7.1	0.5	0.2	22.3	2.0	1.8	0.0	0.5	3.5	0.0	19.3
Cycle Q Clear(g_c), s	3.9	7.1	0.5	0.2	22.3	2.0	1.8	0.0	0.5	3.5	0.0	19.3
Prop In Lane	1.00		1.00	1.00		1.00	1.00		0.87	1.00		1.00
Lane Grp Cap(c), veh/h	240	1694	756	395	1253	559	224	0	456	595	0	475
V/C Ratio(X)	0.63	0.32	0.03	0.01	0.88	0.11	0.27	0.00	0.03	0.20	0.00	0.88
Avail Cap(c_a), veh/h	240	1762	786	411	1322	590	256	0	602	595	0	590
HCM Platoon Ratio	1.00	1.00	1.00	1.00	1.00	1.00	1.00	1.00	1.00	1.00	1.00	1.00
Upstream Filter(I)	1.00	1.00	1.00	1.00	1.00	1.00	1.00	0.00	1.00	1.00	0.00	1.00
Uniform Delay (d), s/veh	18.0	12.4	10.6	16.1	23.3	16.7	20.1	0.0	19.9	17.5	0.0	25.6
Incr Delay (d2), s/veh	5.1	0.1	0.0	0.0	6.8	0.1	0.6	0.0	0.0	0.2	0.0	12.7
Initial Q Delay(d3),s/veh	0.0	0.0	0.0	0.0	0.0	0.0	0.0	0.0	0.0	0.0	0.0	0.0
%ile BackOfQ(50%),veh/ln	1.8	2.6	0.2	0.0	9.9	0.7	0.8	0.0	0.2	1.4	0.0	8.5
Unsig. Movement Delay, s/veh												
LnGrp Delay(d),s/veh	23.1	12.5	10.6	16.1	30.1	16.8	20.7	0.0	20.0	17.6	0.0	38.2
LnGrp LOS	C	B	B	B	C	B	C	A	B	B	A	D
Approach Vol, veh/h		707			1166			76			537	
Approach Delay, s/veh		14.7			29.3			20.6			33.8	
Approach LOS		B			C			C			C	

Timer - Assigned Phs	1	2		4	5	6	7	8
Phs Duration (G+Y+Rc), s	9.5	26.1		41.0	8.1	27.5	9.5	31.5
Change Period (Y+Rc), s	4.5	4.5		4.5	4.5	4.5	4.5	4.5
Max Green Setting (Gmax), s	5.0	28.5		38.0	5.0	28.5	5.0	28.5
Max Q Clear Time (g_c+I1), s	5.5	2.5		9.1	3.8	21.3	5.9	24.3
Green Ext Time (p_c), s	0.0	0.0		4.0	0.0	1.6	0.0	2.8

Intersection Summary	
HCM 6th Ctrl Delay	25.8
HCM 6th LOS	C

Lane Group	EBL	EBT	EBR	WBL	WBT	WBR	NBL	NBT	NBR	SBL	SBT	SBR
Lane Group Flow (vph)	77	401	25	13	547	9	63	6	13	21	6	241
v/c Ratio	0.24	0.30	0.04	0.04	0.40	0.01	0.17	0.01	0.03	0.06	0.01	0.42
Control Delay	8.1	6.5	3.2	5.8	7.1	1.5	9.3	8.0	3.2	8.5	8.0	5.0
Queue Delay	0.0	0.0	0.0	0.0	0.0	0.0	0.0	0.0	0.0	0.0	0.0	0.0
Total Delay	8.1	6.5	3.2	5.8	7.1	1.5	9.3	8.0	3.2	8.5	8.0	5.0
Queue Length 50th (ft)	6	15	0	1	22	0	6	0	0	2	0	3
Queue Length 95th (ft)	25	40	7	7	55	3	24	2	5	11	2	34
Internal Link Dist (ft)		2061			2031			478			1056	
Turn Bay Length (ft)	325		275	275		275	250		275	250		275
Base Capacity (vph)	799	3385	1515	919	3385	1515	1344	3385	1515	1344	3385	1523
Starvation Cap Reductn	0	0	0	0	0	0	0	0	0	0	0	0
Spillback Cap Reductn	0	0	0	0	0	0	0	0	0	0	0	0
Storage Cap Reductn	0	0	0	0	0	0	0	0	0	0	0	0
Reduced v/c Ratio	0.10	0.12	0.02	0.01	0.16	0.01	0.05	0.00	0.01	0.02	0.00	0.16

Intersection Summary

Movement	EBL	EBT	EBR	WBL	WBT	WBR	NBL	NBT	NBR	SBL	SBT	SBR
Lane Configurations												
Traffic Volume (veh/h)	30	221	25	13	312	8	63	6	13	19	6	98
Future Volume (veh/h)	71	369	25	13	503	8	63	6	13	19	6	222
Initial Q (Qb), veh	0	0	0	0	0	0	0	0	0	0	0	0
Ped-Bike Adj(A_pbT)	1.00		1.00	1.00		1.00	1.00		1.00	1.00		1.00
Parking Bus, Adj	1.00	1.00	1.00	1.00	1.00	1.00	1.00	1.00	1.00	1.00	1.00	1.00
Work Zone On Approach		No			No			No			No	
Adj Sat Flow, veh/h/ln	1870	1870	1870	1870	1870	1870	1870	1870	1870	1870	1870	1870
Adj Flow Rate, veh/h	77	401	25	13	547	9	63	6	13	21	6	241
Peak Hour Factor	0.92	0.92	1.00	1.00	0.92	0.92	1.00	1.00	1.00	0.92	1.00	0.92
Percent Heavy Veh, %	2	2	2	2	2	2	2	2	2	2	2	2
Cap, veh/h	526	1386	618	589	1386	618	570	887	396	634	887	396
Arrive On Green	0.39	0.39	0.39	0.39	0.39	0.39	0.25	0.25	0.25	0.25	0.25	0.25
Sat Flow, veh/h	853	3554	1585	961	3554	1585	1133	3554	1585	1393	3554	1585
Grp Volume(v), veh/h	77	401	25	13	547	9	63	6	13	21	6	241
Grp Sat Flow(s),veh/h/ln	853	1777	1585	961	1777	1585	1133	1777	1585	1393	1777	1585
Q Serve(g_s), s	1.8	1.9	0.2	0.2	2.8	0.1	1.1	0.0	0.2	0.3	0.0	3.4
Cycle Q Clear(g_c), s	4.6	1.9	0.2	2.2	2.8	0.1	1.1	0.0	0.2	0.3	0.0	3.4
Prop In Lane	1.00		1.00	1.00		1.00	1.00		1.00	1.00		1.00
Lane Grp Cap(c), veh/h	526	1386	618	589	1386	618	570	887	396	634	887	396
V/C Ratio(X)	0.15	0.29	0.04	0.02	0.39	0.01	0.11	0.01	0.03	0.03	0.01	0.61
Avail Cap(c_a), veh/h	1150	3984	1777	1292	3984	1777	1557	3984	1777	1849	3984	1777
HCM Platoon Ratio	1.00	1.00	1.00	1.00	1.00	1.00	1.00	1.00	1.00	1.00	1.00	1.00
Upstream Filter(I)	1.00	1.00	1.00	1.00	1.00	1.00	1.00	1.00	1.00	1.00	1.00	1.00
Uniform Delay (d), s/veh	7.1	5.2	4.7	6.0	5.5	4.7	7.5	7.0	7.1	7.2	7.0	8.3
Incr Delay (d2), s/veh	0.1	0.1	0.0	0.0	0.2	0.0	0.1	0.0	0.0	0.0	0.0	1.5
Initial Q Delay(d3),s/veh	0.0	0.0	0.0	0.0	0.0	0.0	0.0	0.0	0.0	0.0	0.0	0.0
%ile BackOfQ(50%),veh/ln	0.2	0.3	0.0	0.0	0.5	0.0	0.2	0.0	0.0	0.1	0.0	0.8
Unsig. Movement Delay, s/veh												
LnGrp Delay(d),s/veh	7.3	5.4	4.7	6.0	5.7	4.7	7.6	7.0	7.1	7.2	7.0	9.8
LnGrp LOS	A	A	A	A	A	A	A	A	A	A	A	A
Approach Vol, veh/h		503			569			82			268	
Approach Delay, s/veh		5.6			5.7			7.4			9.5	
Approach LOS		A			A			A			A	

Timer - Assigned Phs	2	4	6	8
Phs Duration (G+Y+Rc), s	10.7	14.2	10.7	14.2
Change Period (Y+Rc), s	4.5	4.5	4.5	4.5
Max Green Setting (Gmax), s	28.0	28.0	28.0	28.0
Max Q Clear Time (g_c+I1), s	3.1	6.6	5.4	4.8
Green Ext Time (p_c), s	0.3	3.2	0.9	3.9

Intersection Summary	
HCM 6th Ctrl Delay	6.5
HCM 6th LOS	A

Lane Group	EBL	EBT	EBR	WBL	WBT	WBR	NBL	NBT	NBR	SBL	SBT	SBR
Lane Group Flow (vph)	83	473	32	44	788	15	126	6	32	15	6	155
v/c Ratio	0.30	0.29	0.04	0.11	0.49	0.02	0.34	0.01	0.07	0.04	0.01	0.31
Control Delay	9.3	6.3	2.7	6.2	7.6	2.0	14.2	10.8	5.8	11.1	10.8	6.2
Queue Delay	0.0	0.0	0.0	0.0	0.0	0.0	0.0	0.0	0.0	0.0	0.0	0.0
Total Delay	9.3	6.3	2.7	6.2	7.6	2.0	14.2	10.8	5.8	11.1	10.8	6.2
Queue Length 50th (ft)	8	22	0	4	42	0	17	1	0	2	1	4
Queue Length 95th (ft)	32	53	9	17	92	4	59	7	14	12	7	37
Internal Link Dist (ft)		1938			2061			454			615	
Turn Bay Length (ft)	300		275	275		250	275		275	275		125
Base Capacity (vph)	533	3034	1362	768	3034	1361	994	1319	1130	994	1319	1156
Starvation Cap Reductn	0	0	0	0	0	0	0	0	0	0	0	0
Spillback Cap Reductn	0	0	0	0	0	0	0	0	0	0	0	0
Storage Cap Reductn	0	0	0	0	0	0	0	0	0	0	0	0
Reduced v/c Ratio	0.16	0.16	0.02	0.06	0.26	0.01	0.13	0.00	0.03	0.02	0.00	0.13

Intersection Summary

Movement	EBL	EBT	EBR	WBL	WBT	WBR	NBL	NBT	NBR	SBL	SBT	SBR
Lane Configurations												
Traffic Volume (veh/h)	76	246	32	44	410	14	126	6	32	14	6	143
Future Volume (veh/h)	76	435	32	44	725	14	126	6	32	14	6	143
Initial Q (Qb), veh	0	0	0	0	0	0	0	0	0	0	0	0
Ped-Bike Adj(A_pbT)	1.00		1.00	1.00		1.00	1.00		1.00	1.00		1.00
Parking Bus, Adj	1.00	1.00	1.00	1.00	1.00	1.00	1.00	1.00	1.00	1.00	1.00	1.00
Work Zone On Approach		No			No			No			No	
Adj Sat Flow, veh/h/ln	1870	1870	1870	1870	1870	1870	1870	1870	1870	1870	1870	1870
Adj Flow Rate, veh/h	83	473	32	44	788	15	126	6	32	15	6	155
Peak Hour Factor	0.92	0.92	1.00	1.00	0.92	0.92	1.00	1.00	1.00	0.92	1.00	0.92
Percent Heavy Veh, %	2	2	2	2	2	2	2	2	2	2	2	2
Cap, veh/h	489	1670	745	620	1670	745	501	354	300	528	354	300
Arrive On Green	0.47	0.47	0.47	0.47	0.47	0.47	0.19	0.19	0.19	0.19	0.19	0.19
Sat Flow, veh/h	678	3554	1585	894	3554	1585	1225	1870	1585	1370	1870	1585
Grp Volume(v), veh/h	83	473	32	44	788	15	126	6	32	15	6	155
Grp Sat Flow(s),veh/h/ln	678	1777	1585	894	1777	1585	1225	1870	1585	1370	1870	1585
Q Serve(g_s), s	2.5	2.1	0.3	0.8	4.0	0.1	2.5	0.1	0.4	0.2	0.1	2.3
Cycle Q Clear(g_c), s	6.5	2.1	0.3	3.0	4.0	0.1	2.5	0.1	0.4	0.3	0.1	2.3
Prop In Lane	1.00		1.00	1.00		1.00	1.00		1.00	1.00		1.00
Lane Grp Cap(c), veh/h	489	1670	745	620	1670	745	501	354	300	528	354	300
V/C Ratio(X)	0.17	0.28	0.04	0.07	0.47	0.02	0.25	0.02	0.11	0.03	0.02	0.52
Avail Cap(c_a), veh/h	901	3834	1710	1164	3834	1710	1313	1593	1350	1436	1593	1350
HCM Platoon Ratio	1.00	1.00	1.00	1.00	1.00	1.00	1.00	1.00	1.00	1.00	1.00	1.00
Upstream Filter(I)	1.00	1.00	1.00	1.00	1.00	1.00	1.00	1.00	1.00	1.00	1.00	1.00
Uniform Delay (d), s/veh	7.0	4.3	3.8	5.2	4.8	3.7	9.7	8.7	8.9	8.8	8.7	9.6
Incr Delay (d2), s/veh	0.2	0.1	0.0	0.0	0.2	0.0	0.3	0.0	0.2	0.0	0.0	1.4
Initial Q Delay(d3),s/veh	0.0	0.0	0.0	0.0	0.0	0.0	0.0	0.0	0.0	0.0	0.0	0.0
%ile BackOfQ(50%),veh/ln	0.2	0.3	0.0	0.1	0.6	0.0	0.5	0.0	0.1	0.0	0.0	0.6
Unsig. Movement Delay, s/veh												
LnGrp Delay(d),s/veh	7.1	4.4	3.8	5.2	5.0	3.8	10.0	8.7	9.0	8.9	8.7	11.0
LnGrp LOS	A	A	A	A	A	A	A	A	A	A	A	B
Approach Vol, veh/h		588			847			164			176	
Approach Delay, s/veh		4.7			5.0			9.8			10.7	
Approach LOS		A			A			A			B	

Timer - Assigned Phs	2	4	6	8
Phs Duration (G+Y+Rc), s	9.5	16.9	9.5	16.9
Change Period (Y+Rc), s	4.5	4.5	4.5	4.5
Max Green Setting (Gmax), s	22.5	28.5	22.5	28.5
Max Q Clear Time (g_c+I1), s	4.5	8.5	4.3	6.0
Green Ext Time (p_c), s	0.5	3.9	0.5	6.1

Intersection Summary	
HCM 6th Ctrl Delay	5.9
HCM 6th LOS	A

Lane Group	WBL	WBR	NBT	NBR	SBL	SBT
Lane Group Flow (vph)	1422	662	985	582	233	1433
v/c Ratio	0.99	0.71	0.95	0.37	0.79	0.88
Control Delay	45.7	16.0	46.5	0.7	35.0	26.0
Queue Delay	0.0	0.0	0.0	0.0	0.0	0.0
Total Delay	45.7	16.0	46.5	0.7	35.0	26.0
Queue Length 50th (ft)	327	193	234	0	64	302
Queue Length 95th (ft)	#483	320	#359	0	#165	#420
Internal Link Dist (ft)	1938		1222			1449
Turn Bay Length (ft)	325			150	1000	
Base Capacity (vph)	1432	935	1033	1583	295	1637
Starvation Cap Reductn	0	0	0	0	0	0
Spillback Cap Reductn	0	0	0	0	0	0
Storage Cap Reductn	0	0	0	0	0	0
Reduced v/c Ratio	0.99	0.71	0.95	0.37	0.79	0.88

Intersection Summary

95th percentile volume exceeds capacity, queue may be longer.
Queue shown is maximum after two cycles.

Movement	WBL	WBR	NBT	NBR	SBL	SBT
Lane Configurations						
Traffic Volume (veh/h)	993	609	675	346	214	1075
Future Volume (veh/h)	1308	609	906	535	214	1318
Initial Q (Qb), veh	0	0	0	0	0	0
Ped-Bike Adj(A_pbT)	1.00	1.00		1.00	1.00	
Parking Bus, Adj	1.00	1.00	1.00	1.00	1.00	1.00
Work Zone On Approach	No		No			No
Adj Sat Flow, veh/h/ln	1870	1870	1870	1870	1870	1870
Adj Flow Rate, veh/h	1422	662	985	0	233	1433
Peak Hour Factor	0.92	0.92	0.92	0.92	0.92	0.92
Percent Heavy Veh, %	2	2	2	2	2	2
Cap, veh/h	1442	837	1038		305	1644
Arrive On Green	0.42	0.42	0.29	0.00	0.11	0.46
Sat Flow, veh/h	3456	1585	3647	1585	1781	3647
Grp Volume(v), veh/h	1422	662	985	0	233	1433
Grp Sat Flow(s),veh/h/ln	1728	1585	1777	1585	1781	1777
Q Serve(g_s), s	30.6	25.4	20.4	0.0	6.4	27.2
Cycle Q Clear(g_c), s	30.6	25.4	20.4	0.0	6.4	27.2
Prop In Lane	1.00	1.00		1.00	1.00	
Lane Grp Cap(c), veh/h	1442	837	1038		305	1644
V/C Ratio(X)	0.99	0.79	0.95		0.76	0.87
Avail Cap(c_a), veh/h	1442	837	1038		305	1644
HCM Platoon Ratio	1.00	1.00	1.00	1.00	1.00	1.00
Upstream Filter(I)	1.00	1.00	1.00	0.00	1.00	1.00
Uniform Delay (d), s/veh	21.6	14.3	26.0	0.0	17.8	18.1
Incr Delay (d2), s/veh	20.3	5.2	18.1	0.0	10.9	6.7
Initial Q Delay(d3),s/veh	0.0	0.0	0.0	0.0	0.0	0.0
%ile BackOfQ(50%),veh/ln	15.2	9.1	10.7	0.0	3.3	11.5
Unsig. Movement Delay, s/veh						
LnGrp Delay(d),s/veh	42.0	19.5	44.1	0.0	28.8	24.8
LnGrp LOS	D	B	D		C	C
Approach Vol, veh/h	2084		985	A		1666
Approach Delay, s/veh	34.8		44.1			25.4
Approach LOS	C		D			C

Timer - Assigned Phs	1	2			6	8
Phs Duration (G+Y+Rc), s	12.8	26.4			39.2	35.8
Change Period (Y+Rc), s	4.5	4.5			4.5	4.5
Max Green Setting (Gmax), s	8.3	21.9			34.7	31.3
Max Q Clear Time (g_c+I1), s	8.4	22.4			29.2	32.6
Green Ext Time (p_c), s	0.0	0.0			4.1	0.0

Intersection Summary	
HCM 6th Ctrl Delay	33.4
HCM 6th LOS	C

Notes

Unsignalized Delay for [NBR] is excluded from calculations of the approach delay and intersection delay.

Intersection	
Int Delay, s/veh	3.3

Movement	EBT	EBR	WBL	WBT	NBL	NBR
Lane Configurations						
Traffic Vol, veh/h	164	0	0	317	0	0
Future Vol, veh/h	414	122	22	584	158	31
Conflicting Peds, #/hr	0	0	0	0	0	0
Sign Control	Free	Free	Free	Free	Stop	Stop
RT Channelized	-	None	-	None	-	None
Storage Length	-	235	235	-	200	0
Veh in Median Storage, #	0	-	-	0	0	-
Grade, %	0	-	-	0	0	-
Peak Hour Factor	100	100	100	100	100	100
Heavy Vehicles, %	2	2	2	2	2	2
Mvmt Flow	414	122	22	584	158	31

Major/Minor	Major1		Major2		Minor1	
Conflicting Flow All	0	0	536	0	750	207
Stage 1	-	-	-	-	414	-
Stage 2	-	-	-	-	336	-
Critical Hdwy	-	-	4.14	-	6.84	6.94
Critical Hdwy Stg 1	-	-	-	-	5.84	-
Critical Hdwy Stg 2	-	-	-	-	5.84	-
Follow-up Hdwy	-	-	2.22	-	3.52	3.32
Pot Cap-1 Maneuver	-	-	1028	-	347	799
Stage 1	-	-	-	-	635	-
Stage 2	-	-	-	-	696	-
Platoon blocked, %	-	-		-		
Mov Cap-1 Maneuver	-	-	1028	-	340	799
Mov Cap-2 Maneuver	-	-	-	-	340	-
Stage 1	-	-	-	-	635	-
Stage 2	-	-	-	-	681	-

Approach	EB	WB	NB
HCM Control Delay, s	0	0.3	22.1
HCM LOS			C

Minor Lane/Major Mvmt	NBLn1	NBLn2	EBT	EBR	WBL	WBT
Capacity (veh/h)	340	799	-	-	1028	-
HCM Lane V/C Ratio	0.465	0.039	-	-	0.021	-
HCM Control Delay (s)	24.5	9.7	-	-	8.6	-
HCM Lane LOS	C	A	-	-	A	-
HCM 95th %tile Q(veh)	2.4	0.1	-	-	0.1	-

Intersection	
Int Delay, s/veh	4.9

Movement	EBT	EBR	WBL	WBT	NBL	NBR
Lane Configurations						
Traffic Vol, veh/h	164	0	0	317	0	0
Future Vol, veh/h	253	192	17	337	269	20
Conflicting Peds, #/hr	0	0	0	0	0	0
Sign Control	Free	Free	Free	Free	Stop	Stop
RT Channelized	-	None	-	None	-	None
Storage Length	-	235	235	-	0	0
Veh in Median Storage, #	0	-	-	0	0	-
Grade, %	0	-	-	0	0	-
Peak Hour Factor	100	100	100	100	100	100
Heavy Vehicles, %	2	2	2	2	2	2
Mvmt Flow	253	192	17	337	269	20

Major/Minor	Major1		Major2		Minor1	
Conflicting Flow All	0	0	445	0	456	127
Stage 1	-	-	-	-	253	-
Stage 2	-	-	-	-	203	-
Critical Hdwy	-	-	4.14	-	6.84	6.94
Critical Hdwy Stg 1	-	-	-	-	5.84	-
Critical Hdwy Stg 2	-	-	-	-	5.84	-
Follow-up Hdwy	-	-	2.22	-	3.52	3.32
Pot Cap-1 Maneuver	-	-	1112	-	533	900
Stage 1	-	-	-	-	766	-
Stage 2	-	-	-	-	811	-
Platoon blocked, %	-	-		-		
Mov Cap-1 Maneuver	-	-	1112	-	525	900
Mov Cap-2 Maneuver	-	-	-	-	525	-
Stage 1	-	-	-	-	766	-
Stage 2	-	-	-	-	799	-

Approach	EB	WB	NB
HCM Control Delay, s	0	0.4	18.1
HCM LOS			C

Minor Lane/Major Mvmt	NBLn1	NBLn2	EBT	EBR	WBL	WBT
Capacity (veh/h)	525	900	-	-	1112	-
HCM Lane V/C Ratio	0.512	0.022	-	-	0.015	-
HCM Control Delay (s)	18.8	9.1	-	-	8.3	-
HCM Lane LOS	C	A	-	-	A	-
HCM 95th %tile Q(veh)	2.9	0.1	-	-	0	-

Intersection	
Int Delay, s/veh	4.6

Movement	EBL	EBT	EBR	WBL	WBT	WBR	NBL	NBT	NBR	SBL	SBT	SBR
Lane Configurations												
Traffic Vol, veh/h	0	0	0	0	0	0	0	0	0	0	0	0
Future Vol, veh/h	83	0	15	14	0	40	16	66	11	13	22	109
Conflicting Peds, #/hr	0	0	0	0	0	0	0	0	0	0	0	0
Sign Control	Stop	Stop	Stop	Stop	Stop	Stop	Free	Free	Free	Free	Free	Free
RT Channelized	-	-	None	-	-	None	-	-	None	-	-	None
Storage Length	-	-	-	-	-	-	-	-	-	-	-	-
Veh in Median Storage, #	-	0	-	-	0	-	-	0	-	-	0	-
Grade, %	-	0	-	-	0	-	-	0	-	-	0	-
Peak Hour Factor	100	100	100	100	100	100	100	100	100	100	100	100
Heavy Vehicles, %	2	2	2	2	2	2	2	2	2	2	2	2
Mvmt Flow	83	0	15	14	0	40	16	66	11	13	22	109

Major/Minor	Minor2			Minor1			Major1			Major2		
Conflicting Flow All	227	212	77	214	261	72	131	0	0	77	0	0
Stage 1	103	103	-	104	104	-	-	-	-	-	-	-
Stage 2	124	109	-	110	157	-	-	-	-	-	-	-
Critical Hdwy	7.12	6.52	6.22	7.12	6.52	6.22	4.12	-	-	4.12	-	-
Critical Hdwy Stg 1	6.12	5.52	-	6.12	5.52	-	-	-	-	-	-	-
Critical Hdwy Stg 2	6.12	5.52	-	6.12	5.52	-	-	-	-	-	-	-
Follow-up Hdwy	3.518	4.018	3.318	3.518	4.018	3.318	2.218	-	-	2.218	-	-
Pot Cap-1 Maneuver	728	685	984	743	644	990	1454	-	-	1522	-	-
Stage 1	903	810	-	902	809	-	-	-	-	-	-	-
Stage 2	880	805	-	895	768	-	-	-	-	-	-	-
Platoon blocked, %								-	-		-	-
Mov Cap-1 Maneuver	687	671	984	720	630	990	1454	-	-	1522	-	-
Mov Cap-2 Maneuver	687	671	-	720	630	-	-	-	-	-	-	-
Stage 1	892	803	-	891	799	-	-	-	-	-	-	-
Stage 2	834	795	-	873	761	-	-	-	-	-	-	-

Approach	EB	WB	NB	SB
HCM Control Delay, s	10.8	9.2	1.3	0.7
HCM LOS	B	A		

Minor Lane/Major Mvmt	NBL	NBT	NBR	EBLn1	WBLn1	SBL	SBT	SBR
Capacity (veh/h)	1454	-	-	720	902	1522	-	-
HCM Lane V/C Ratio	0.011	-	-	0.136	0.06	0.009	-	-
HCM Control Delay (s)	7.5	0	-	10.8	9.2	7.4	0	-
HCM Lane LOS	A	A	-	B	A	A	A	-
HCM 95th %tile Q(veh)	0	-	-	0.5	0.2	0	-	-

Intersection	
Int Delay, s/veh	8.1

Movement	EBL	EBT	EBR	WBL	WBT	WBR	NBL	NBT	NBR	SBL	SBT	SBR
Lane Configurations												
Traffic Vol, veh/h	0	0	0	0	0	0	0	0	0	0	0	0
Future Vol, veh/h	34	20	69	110	11	59	23	0	85	39	0	12
Conflicting Peds, #/hr	0	0	0	0	0	0	0	0	0	0	0	0
Sign Control	Stop	Stop	Stop	Stop	Stop	Stop	Free	Free	Free	Free	Free	Free
RT Channelized	-	-	None	-	-	None	-	-	None	-	-	None
Storage Length	-	-	-	-	-	-	-	-	-	-	-	-
Veh in Median Storage, #	-	0	-	-	0	-	-	0	-	-	0	-
Grade, %	-	0	-	-	0	-	-	0	-	-	0	-
Peak Hour Factor	100	100	100	100	100	100	100	100	100	100	100	100
Heavy Vehicles, %	2	2	2	2	2	2	2	2	2	2	2	2
Mvmt Flow	34	20	69	110	11	59	23	0	85	39	0	12

Major/Minor	Minor2			Minor1			Major1			Major2		
Conflicting Flow All	208	215	6	218	179	43	12	0	0	85	0	0
Stage 1	84	84	-	89	89	-	-	-	-	-	-	-
Stage 2	124	131	-	129	90	-	-	-	-	-	-	-
Critical Hdwy	7.12	6.52	6.22	7.12	6.52	6.22	4.12	-	-	4.12	-	-
Critical Hdwy Stg 1	6.12	5.52	-	6.12	5.52	-	-	-	-	-	-	-
Critical Hdwy Stg 2	6.12	5.52	-	6.12	5.52	-	-	-	-	-	-	-
Follow-up Hdwy	3.518	4.018	3.318	3.518	4.018	3.318	2.218	-	-	2.218	-	-
Pot Cap-1 Maneuver	749	683	1077	738	715	1027	1607	-	-	1512	-	-
Stage 1	924	825	-	918	821	-	-	-	-	-	-	-
Stage 2	880	788	-	875	820	-	-	-	-	-	-	-
Platoon blocked, %								-	-		-	-
Mov Cap-1 Maneuver	676	655	1077	654	686	1027	1607	-	-	1512	-	-
Mov Cap-2 Maneuver	676	655	-	654	686	-	-	-	-	-	-	-
Stage 1	910	804	-	904	809	-	-	-	-	-	-	-
Stage 2	806	776	-	778	799	-	-	-	-	-	-	-

Approach	EB	WB	NB	SB
HCM Control Delay, s	10	11.4	1.5	5.7
HCM LOS	B	B		

Minor Lane/Major Mvmt	NBL	NBT	NBR	EBLn1	WBLn1	SBL	SBT	SBR
Capacity (veh/h)	1607	-	-	849	745	1512	-	-
HCM Lane V/C Ratio	0.014	-	-	0.145	0.242	0.026	-	-
HCM Control Delay (s)	7.3	0	-	10	11.4	7.4	0	-
HCM Lane LOS	A	A	-	B	B	A	A	-
HCM 95th %tile Q(veh)	0	-	-	0.5	0.9	0.1	-	-

Intersection	
Int Delay, s/veh	1.7

Movement	EBL	EBT	WBT	WBR	SBL	SBR
Lane Configurations						
Traffic Vol, veh/h	0	0	0	0	0	0
Future Vol, veh/h	12	132	143	12	17	37
Conflicting Peds, #/hr	0	0	0	0	0	0
Sign Control	Free	Free	Free	Free	Stop	Stop
RT Channelized	-	None	-	None	-	None
Storage Length	-	-	-	-	-	-
Veh in Median Storage, #	-	0	0	-	0	-
Grade, %	-	0	0	-	0	-
Peak Hour Factor	100	100	100	100	100	100
Heavy Vehicles, %	2	2	2	2	2	2
Mvmt Flow	12	132	143	12	17	37

Major/Minor	Major1		Major2		Minor2	
Conflicting Flow All	155	0	-	0	305	149
Stage 1	-	-	-	-	149	-
Stage 2	-	-	-	-	156	-
Critical Hdwy	4.12	-	-	-	6.42	6.22
Critical Hdwy Stg 1	-	-	-	-	5.42	-
Critical Hdwy Stg 2	-	-	-	-	5.42	-
Follow-up Hdwy	2.218	-	-	-	3.518	3.318
Pot Cap-1 Maneuver	1425	-	-	-	687	898
Stage 1	-	-	-	-	879	-
Stage 2	-	-	-	-	872	-
Platoon blocked, %		-	-	-		
Mov Cap-1 Maneuver	1425	-	-	-	681	898
Mov Cap-2 Maneuver	-	-	-	-	681	-
Stage 1	-	-	-	-	871	-
Stage 2	-	-	-	-	872	-

Approach	EB	WB	SB
HCM Control Delay, s	0.6	0	9.7
HCM LOS			A

Minor Lane/Major Mvmt	EBL	EBT	WBT	WBR	SBLn1
Capacity (veh/h)	1425	-	-	-	816
HCM Lane V/C Ratio	0.008	-	-	-	0.066
HCM Control Delay (s)	7.5	0	-	-	9.7
HCM Lane LOS	A	A	-	-	A
HCM 95th %tile Q(veh)	0	-	-	-	0.2

Intersection	
Int Delay, s/veh	3.7

Movement	EBL	EBT	EBR	WBL	WBT	WBR	NBL	NBT	NBR	SBL	SBT	SBR
Lane Configurations												
Traffic Vol, veh/h	0	0	0	0	0	0	0	0	0	0	0	0
Future Vol, veh/h	6	33	118	175	125	8	0	0	0	4	9	20
Conflicting Peds, #/hr	0	0	0	0	0	0	0	0	0	0	0	0
Sign Control	Free	Free	Free	Free	Free	Free	Stop	Stop	Stop	Stop	Stop	Stop
RT Channelized	-	-	None	-	-	None	-	-	None	-	-	None
Storage Length	-	-	-	-	-	-	-	-	-	-	-	-
Veh in Median Storage, #	-	0	-	-	0	-	-	0	-	-	0	-
Grade, %	-	0	-	-	0	-	-	0	-	-	0	-
Peak Hour Factor	100	100	100	100	100	100	100	100	100	100	100	100
Heavy Vehicles, %	2	2	2	2	2	2	2	2	2	2	2	2
Mvmt Flow	6	33	118	175	125	8	0	0	0	4	9	20

Major/Minor	Major1			Major2			Minor1			Minor2		
Conflicting Flow All	133	0	0	151	0	0	598	587	92	583	642	129
Stage 1	-	-	-	-	-	-	104	104	-	479	479	-
Stage 2	-	-	-	-	-	-	494	483	-	104	163	-
Critical Hdwy	4.12	-	-	4.12	-	-	7.12	6.52	6.22	7.12	6.52	6.22
Critical Hdwy Stg 1	-	-	-	-	-	-	6.12	5.52	-	6.12	5.52	-
Critical Hdwy Stg 2	-	-	-	-	-	-	6.12	5.52	-	6.12	5.52	-
Follow-up Hdwy	2.218	-	-	2.218	-	-	3.518	4.018	3.318	3.518	4.018	3.318
Pot Cap-1 Maneuver	1452	-	-	1430	-	-	414	422	965	424	392	921
Stage 1	-	-	-	-	-	-	902	809	-	568	555	-
Stage 2	-	-	-	-	-	-	557	553	-	902	763	-
Platoon blocked, %		-	-		-	-						
Mov Cap-1 Maneuver	1452	-	-	1430	-	-	356	365	965	379	339	921
Mov Cap-2 Maneuver	-	-	-	-	-	-	356	365	-	379	339	-
Stage 1	-	-	-	-	-	-	897	805	-	565	482	-
Stage 2	-	-	-	-	-	-	464	480	-	897	759	-

Approach	EB	WB	NB	SB
HCM Control Delay, s	0.3	4.5	0	11.8
HCM LOS			A	B

Minor Lane/Major Mvmt	NBLn1	EBL	EBT	EBR	WBL	WBT	WBR	SBLn1
Capacity (veh/h)	-	1452	-	-	1430	-	-	561
HCM Lane V/C Ratio	-	0.004	-	-	0.122	-	-	0.059
HCM Control Delay (s)	0	7.5	0	-	7.9	0	-	11.8
HCM Lane LOS	A	A	A	-	A	A	-	B
HCM 95th %tile Q(veh)	-	0	-	-	0.4	-	-	0.2

Intersection	
Int Delay, s/veh	9

Movement	EBL	EBT	EBR	WBL	WBT	WBR	NBL	NBT	NBR	SBL	SBT	SBR
Lane Configurations												
Traffic Vol, veh/h	0	0	0	0	0	0	0	0	0	0	0	0
Future Vol, veh/h	1	9	27	55	93	1	201	12	89	4	17	14
Conflicting Peds, #/hr	0	0	0	0	0	0	0	0	0	0	0	0
Sign Control	Free	Free	Free	Free	Free	Free	Stop	Stop	Stop	Stop	Stop	Stop
RT Channelized	-	-	None	-	-	None	-	-	None	-	-	None
Storage Length	-	-	-	-	-	-	-	-	-	-	-	-
Veh in Median Storage, #	-	0	-	-	0	-	-	0	-	-	0	-
Grade, %	-	0	-	-	0	-	-	0	-	-	0	-
Peak Hour Factor	100	100	100	100	100	100	100	100	100	100	100	100
Heavy Vehicles, %	2	2	2	2	2	2	2	2	2	2	2	2
Mvmt Flow	1	9	27	55	93	1	201	12	89	4	17	14

Major/Minor	Major1			Major2			Minor1			Minor2		
Conflicting Flow All	94	0	0	36	0	0	244	229	23	279	242	94
Stage 1	-	-	-	-	-	-	25	25	-	204	204	-
Stage 2	-	-	-	-	-	-	219	204	-	75	38	-
Critical Hdwy	4.12	-	-	4.12	-	-	7.12	6.52	6.22	7.12	6.52	6.22
Critical Hdwy Stg 1	-	-	-	-	-	-	6.12	5.52	-	6.12	5.52	-
Critical Hdwy Stg 2	-	-	-	-	-	-	6.12	5.52	-	6.12	5.52	-
Follow-up Hdwy	2.218	-	-	2.218	-	-	3.518	4.018	3.318	3.518	4.018	3.318
Pot Cap-1 Maneuver	1500	-	-	1575	-	-	710	671	1054	673	660	963
Stage 1	-	-	-	-	-	-	993	874	-	798	733	-
Stage 2	-	-	-	-	-	-	783	733	-	934	863	-
Platoon blocked, %		-	-		-	-						
Mov Cap-1 Maneuver	1500	-	-	1575	-	-	665	646	1054	590	635	963
Mov Cap-2 Maneuver	-	-	-	-	-	-	665	646	-	590	635	-
Stage 1	-	-	-	-	-	-	992	873	-	797	706	-
Stage 2	-	-	-	-	-	-	725	706	-	843	862	-

Approach	EB	WB	NB	SB
HCM Control Delay, s	0.2	2.7	13.1	10.2
HCM LOS			B	B

Minor Lane/Major Mvmt	NBLn1	EBL	EBT	EBR	WBL	WBT	WBR	SBLn1
Capacity (veh/h)	745	1500	-	-	1575	-	-	728
HCM Lane V/C Ratio	0.405	0.001	-	-	0.035	-	-	0.048
HCM Control Delay (s)	13.1	7.4	0	-	7.4	0	-	10.2
HCM Lane LOS	B	A	A	-	A	A	-	B
HCM 95th %tile Q(veh)	2	0	-	-	0.1	-	-	0.2

Intersection	
Int Delay, s/veh	6.9

Movement	EBL	EBT	EBR	WBL	WBT	WBR	NBL	NBT	NBR	SBL	SBT	SBR
Lane Configurations												
Traffic Vol, veh/h	0	0	0	0	0	0	0	0	0	0	0	0
Future Vol, veh/h	183	7	55	25	0	21	0	98	8	4	95	0
Conflicting Peds, #/hr	0	0	0	0	0	0	0	0	0	0	0	0
Sign Control	Stop	Stop	Stop	Stop	Stop	Stop	Free	Free	Free	Free	Free	Free
RT Channelized	-	-	None	-	-	None	-	-	None	-	-	None
Storage Length	-	-	-	-	-	-	-	-	-	-	-	-
Veh in Median Storage, #	-	0	-	-	0	-	-	0	-	-	0	-
Grade, %	-	0	-	-	0	-	-	0	-	-	0	-
Peak Hour Factor	100	100	100	100	100	100	100	100	100	100	100	100
Heavy Vehicles, %	2	2	2	2	2	2	2	2	2	2	2	2
Mvmt Flow	183	7	55	25	0	21	0	98	8	4	95	0

Major/Minor	Minor2			Minor1			Major1			Major2		
Conflicting Flow All	216	209	95	236	205	102	95	0	0	106	0	0
Stage 1	103	103	-	102	102	-	-	-	-	-	-	-
Stage 2	113	106	-	134	103	-	-	-	-	-	-	-
Critical Hdwy	7.12	6.52	6.22	7.12	6.52	6.22	4.12	-	-	4.12	-	-
Critical Hdwy Stg 1	6.12	5.52	-	6.12	5.52	-	-	-	-	-	-	-
Critical Hdwy Stg 2	6.12	5.52	-	6.12	5.52	-	-	-	-	-	-	-
Follow-up Hdwy	3.518	4.018	3.318	3.518	4.018	3.318	2.218	-	-	2.218	-	-
Pot Cap-1 Maneuver	740	688	962	718	691	953	1499	-	-	1485	-	-
Stage 1	903	810	-	904	811	-	-	-	-	-	-	-
Stage 2	892	807	-	869	810	-	-	-	-	-	-	-
Platoon blocked, %								-	-		-	-
Mov Cap-1 Maneuver	722	686	962	670	689	953	1499	-	-	1485	-	-
Mov Cap-2 Maneuver	722	686	-	670	689	-	-	-	-	-	-	-
Stage 1	903	808	-	904	811	-	-	-	-	-	-	-
Stage 2	872	807	-	810	808	-	-	-	-	-	-	-

Approach	EB	WB	NB	SB
HCM Control Delay, s	11.9	9.9	0	0.3
HCM LOS	B	A		

Minor Lane/Major Mvmt	NBL	NBT	NBR	EBLn1	WBLn1	SBL	SBT	SBR
Capacity (veh/h)	1499	-	-	764	775	1485	-	-
HCM Lane V/C Ratio	-	-	-	0.321	0.059	0.003	-	-
HCM Control Delay (s)	0	-	-	11.9	9.9	7.4	0	-
HCM Lane LOS	A	-	-	B	A	A	A	-
HCM 95th %tile Q(veh)	0	-	-	1.4	0.2	0	-	-

Intersection	
Int Delay, s/veh	3

Movement	EBL	EBT	EBR	WBL	WBT	WBR	NBL	NBT	NBR	SBL	SBT	SBR
Lane Configurations												
Traffic Vol, veh/h	0	0	0	0	0	0	0	0	0	0	0	0
Future Vol, veh/h	14	74	14	6	100	4	31	0	11	11	0	18
Conflicting Peds, #/hr	0	0	0	0	0	0	0	0	0	0	0	0
Sign Control	Free	Free	Free	Free	Free	Free	Stop	Stop	Stop	Stop	Stop	Stop
RT Channelized	-	-	None	-	-	None	-	-	None	-	-	None
Storage Length	-	-	-	-	-	-	-	-	-	-	-	-
Veh in Median Storage, #	-	0	-	-	0	-	-	0	-	-	0	-
Grade, %	-	0	-	-	0	-	-	0	-	-	0	-
Peak Hour Factor	100	100	100	100	100	100	100	100	100	100	100	100
Heavy Vehicles, %	2	2	2	2	2	2	2	2	2	2	2	2
Mvmt Flow	14	74	14	6	100	4	31	0	11	11	0	18

Major/Minor	Major1			Major2			Minor1			Minor2		
Conflicting Flow All	104	0	0	88	0	0	232	225	81	229	230	102
Stage 1	-	-	-	-	-	-	109	109	-	114	114	-
Stage 2	-	-	-	-	-	-	123	116	-	115	116	-
Critical Hdwy	4.12	-	-	4.12	-	-	7.12	6.52	6.22	7.12	6.52	6.22
Critical Hdwy Stg 1	-	-	-	-	-	-	6.12	5.52	-	6.12	5.52	-
Critical Hdwy Stg 2	-	-	-	-	-	-	6.12	5.52	-	6.12	5.52	-
Follow-up Hdwy	2.218	-	-	2.218	-	-	3.518	4.018	3.318	3.518	4.018	3.318
Pot Cap-1 Maneuver	1488	-	-	1508	-	-	723	674	979	726	670	953
Stage 1	-	-	-	-	-	-	896	805	-	891	801	-
Stage 2	-	-	-	-	-	-	881	800	-	890	800	-
Platoon blocked, %		-	-		-	-						
Mov Cap-1 Maneuver	1488	-	-	1508	-	-	702	665	979	710	661	953
Mov Cap-2 Maneuver	-	-	-	-	-	-	702	665	-	710	661	-
Stage 1	-	-	-	-	-	-	887	797	-	882	798	-
Stage 2	-	-	-	-	-	-	861	797	-	871	792	-

Approach	EB	WB	NB	SB
HCM Control Delay, s	1	0.4	10	9.4
HCM LOS			B	A

Minor Lane/Major Mvmt	NBLn1	EBL	EBT	EBR	WBL	WBT	WBR	SBLn1
Capacity (veh/h)	758	1488	-	-	1508	-	-	843
HCM Lane V/C Ratio	0.055	0.009	-	-	0.004	-	-	0.034
HCM Control Delay (s)	10	7.4	0	-	7.4	0	-	9.4
HCM Lane LOS	B	A	A	-	A	A	-	A
HCM 95th %tile Q(veh)	0.2	0	-	-	0	-	-	0.1

Intersection	
Int Delay, s/veh	3.4

Movement	EBL	EBT	EBR	WBL	WBT	WBR	NBL	NBT	NBR	SBL	SBT	SBR
Lane Configurations												
Traffic Vol, veh/h	0	0	0	0	0	0	0	0	0	0	0	0
Future Vol, veh/h	10	79	7	13	63	6	29	0	17	7	0	18
Conflicting Peds, #/hr	0	0	0	0	0	0	0	0	0	0	0	0
Sign Control	Free	Free	Free	Free	Free	Free	Stop	Stop	Stop	Stop	Stop	Stop
RT Channelized	-	-	None	-	-	None	-	-	None	-	-	None
Storage Length	-	-	-	-	-	-	-	-	-	-	-	-
Veh in Median Storage, #	-	0	-	-	0	-	-	0	-	-	0	-
Grade, %	-	0	-	-	0	-	-	0	-	-	0	-
Peak Hour Factor	100	100	100	100	100	100	100	100	100	100	100	100
Heavy Vehicles, %	2	2	2	2	2	2	2	2	2	2	2	2
Mvmt Flow	10	79	7	13	63	6	29	0	17	7	0	18

Major/Minor	Major1			Major2			Minor1			Minor2		
Conflicting Flow All	69	0	0	86	0	0	204	198	83	203	198	66
Stage 1	-	-	-	-	-	-	103	103	-	92	92	-
Stage 2	-	-	-	-	-	-	101	95	-	111	106	-
Critical Hdwy	4.12	-	-	4.12	-	-	7.12	6.52	6.22	7.12	6.52	6.22
Critical Hdwy Stg 1	-	-	-	-	-	-	6.12	5.52	-	6.12	5.52	-
Critical Hdwy Stg 2	-	-	-	-	-	-	6.12	5.52	-	6.12	5.52	-
Follow-up Hdwy	2.218	-	-	2.218	-	-	3.518	4.018	3.318	3.518	4.018	3.318
Pot Cap-1 Maneuver	1532	-	-	1510	-	-	754	698	976	755	698	998
Stage 1	-	-	-	-	-	-	903	810	-	915	819	-
Stage 2	-	-	-	-	-	-	905	816	-	894	807	-
Platoon blocked, %		-	-		-	-						
Mov Cap-1 Maneuver	1532	-	-	1510	-	-	731	687	976	733	687	998
Mov Cap-2 Maneuver	-	-	-	-	-	-	731	687	-	733	687	-
Stage 1	-	-	-	-	-	-	897	804	-	909	812	-
Stage 2	-	-	-	-	-	-	881	809	-	872	801	-

Approach	EB	WB	NB	SB
HCM Control Delay, s	0.8	1.2	9.7	9.1
HCM LOS			A	A

Minor Lane/Major Mvmt	NBLn1	EBL	EBT	EBR	WBL	WBT	WBR	SBLn1
Capacity (veh/h)	806	1532	-	-	1510	-	-	906
HCM Lane V/C Ratio	0.057	0.007	-	-	0.009	-	-	0.028
HCM Control Delay (s)	9.7	7.4	0	-	7.4	0	-	9.1
HCM Lane LOS	A	A	A	-	A	A	-	A
HCM 95th %tile Q(veh)	0.2	0	-	-	0	-	-	0.1

Intersection	
Int Delay, s/veh	3.1

Movement	EBL	EBT	EBR	WBL	WBT	WBR	NBL	NBT	NBR	SBL	SBT	SBR
Lane Configurations												
Traffic Vol, veh/h	0	0	0	0	0	0	0	0	0	0	0	0
Future Vol, veh/h	60	0	6	15	0	58	10	171	8	17	94	98
Conflicting Peds, #/hr	0	0	0	0	0	0	0	0	0	0	0	0
Sign Control	Stop	Stop	Stop	Stop	Stop	Stop	Free	Free	Free	Free	Free	Free
RT Channelized	-	-	None	-	-	None	-	-	None	-	-	None
Storage Length	-	-	-	-	-	-	-	-	-	-	-	-
Veh in Median Storage, #	-	0	-	-	0	-	-	0	-	-	0	-
Grade, %	-	0	-	-	0	-	-	0	-	-	0	-
Peak Hour Factor	100	100	100	100	100	100	100	100	100	100	100	100
Heavy Vehicles, %	2	2	2	2	2	2	2	2	2	2	2	2
Mvmt Flow	60	0	6	15	0	58	10	171	8	17	94	98

Major/Minor	Minor2			Minor1			Major1			Major2		
Conflicting Flow All	283	376	96	276	421	90	192	0	0	179	0	0
Stage 1	177	177	-	195	195	-	-	-	-	-	-	-
Stage 2	106	199	-	81	226	-	-	-	-	-	-	-
Critical Hdwy	7.54	6.54	6.94	7.54	6.54	6.94	4.14	-	-	4.14	-	-
Critical Hdwy Stg 1	6.54	5.54	-	6.54	5.54	-	-	-	-	-	-	-
Critical Hdwy Stg 2	6.54	5.54	-	6.54	5.54	-	-	-	-	-	-	-
Follow-up Hdwy	3.52	4.02	3.32	3.52	4.02	3.32	2.22	-	-	2.22	-	-
Pot Cap-1 Maneuver	647	554	942	655	522	950	1379	-	-	1394	-	-
Stage 1	808	752	-	788	738	-	-	-	-	-	-	-
Stage 2	888	735	-	918	716	-	-	-	-	-	-	-
Platoon blocked, %								-	-		-	-
Mov Cap-1 Maneuver	597	542	942	640	511	950	1379	-	-	1394	-	-
Mov Cap-2 Maneuver	597	542	-	640	511	-	-	-	-	-	-	-
Stage 1	802	741	-	782	732	-	-	-	-	-	-	-
Stage 2	827	729	-	899	706	-	-	-	-	-	-	-

Approach	EB	WB	NB	SB
HCM Control Delay, s	11.5	9.6	0.4	0.6
HCM LOS	B	A		

Minor Lane/Major Mvmt	NBL	NBT	NBR	EBLn1	WBLn1	SBL	SBT	SBR
Capacity (veh/h)	1379	-	-	618	864	1394	-	-
HCM Lane V/C Ratio	0.007	-	-	0.107	0.084	0.012	-	-
HCM Control Delay (s)	7.6	0	-	11.5	9.6	7.6	0	-
HCM Lane LOS	A	A	-	B	A	A	A	-
HCM 95th %tile Q(veh)	0	-	-	0.4	0.3	0	-	-

Intersection	
Int Delay, s/veh	4.6

Movement	EBL	EBT	EBR	WBL	WBT	WBR	NBL	NBT	NBR	SBL	SBT	SBR
Lane Configurations												
Traffic Vol, veh/h	0	0	0	0	0	0	0	0	0	0	0	0
Future Vol, veh/h	79	0	21	13	0	37	11	73	8	12	80	23
Conflicting Peds, #/hr	0	0	0	0	0	0	0	0	0	0	0	0
Sign Control	Stop	Stop	Stop	Stop	Stop	Stop	Free	Free	Free	Free	Free	Free
RT Channelized	-	-	None	-	-	None	-	-	None	-	-	None
Storage Length	-	-	-	-	-	-	-	-	-	-	-	-
Veh in Median Storage, #	-	0	-	-	0	-	-	0	-	-	0	-
Grade, %	-	0	-	-	0	-	-	0	-	-	0	-
Peak Hour Factor	100	100	100	100	100	100	100	100	100	100	100	100
Heavy Vehicles, %	2	2	2	2	2	2	2	2	2	2	2	2
Mvmt Flow	79	0	21	13	0	37	11	73	8	12	80	23

Major/Minor	Minor2			Minor1			Major1			Major2		
Conflicting Flow All	175	219	52	163	226	41	103	0	0	81	0	0
Stage 1	116	116	-	99	99	-	-	-	-	-	-	-
Stage 2	59	103	-	64	127	-	-	-	-	-	-	-
Critical Hdwy	7.54	6.54	6.94	7.54	6.54	6.94	4.14	-	-	4.14	-	-
Critical Hdwy Stg 1	6.54	5.54	-	6.54	5.54	-	-	-	-	-	-	-
Critical Hdwy Stg 2	6.54	5.54	-	6.54	5.54	-	-	-	-	-	-	-
Follow-up Hdwy	3.52	4.02	3.32	3.52	4.02	3.32	2.22	-	-	2.22	-	-
Pot Cap-1 Maneuver	771	678	1005	786	672	1021	1487	-	-	1515	-	-
Stage 1	876	799	-	896	812	-	-	-	-	-	-	-
Stage 2	946	809	-	939	790	-	-	-	-	-	-	-
Platoon blocked, %								-	-		-	-
Mov Cap-1 Maneuver	734	667	1005	760	661	1021	1487	-	-	1515	-	-
Mov Cap-2 Maneuver	734	667	-	760	661	-	-	-	-	-	-	-
Stage 1	869	793	-	889	806	-	-	-	-	-	-	-
Stage 2	904	803	-	912	784	-	-	-	-	-	-	-

Approach	EB	WB	NB	SB
HCM Control Delay, s	10.3	9.1	0.9	0.8
HCM LOS	B	A		

Minor Lane/Major Mvmt	NBL	NBT	NBR	EBLn1	WBLn1	SBL	SBT	SBR
Capacity (veh/h)	1487	-	-	778	937	1515	-	-
HCM Lane V/C Ratio	0.007	-	-	0.129	0.053	0.008	-	-
HCM Control Delay (s)	7.4	0	-	10.3	9.1	7.4	0	-
HCM Lane LOS	A	A	-	B	A	A	A	-
HCM 95th %tile Q(veh)	0	-	-	0.4	0.2	0	-	-

Intersection	
Intersection Delay, s/veh	3.3
Intersection LOS	A

Approach	EB	WB	NB	SB
Entry Lanes	1	1	2	2
Conflicting Circle Lanes	1	1	1	1
Adj Approach Flow, veh/h	103	36	140	114
Demand Flow Rate, veh/h	105	36	143	117
Vehicles Circulating, veh/h	92	117	74	59
Vehicles Exiting, veh/h	84	100	123	94
Ped Vol Crossing Leg, #/h	0	0	0	0
Ped Cap Adj	1.000	1.000	1.000	1.000
Approach Delay, s/veh	3.6	3.2	3.2	3.1
Approach LOS	A	A	A	A

Lane	Left	Left	Left	Right	Left	Right
Designated Moves	LTR	LTR	LT	R	LT	R
Assumed Moves	LTR	LTR	LT	R	LT	R
RT Channelized						
Lane Util	1.000	1.000	0.503	0.497	0.658	0.342
Follow-Up Headway, s	2.609	2.609	2.535	2.535	2.535	2.535
Critical Headway, s	4.976	4.976	4.544	4.544	4.544	4.544
Entry Flow, veh/h	105	36	72	71	77	40
Cap Entry Lane, veh/h	1256	1225	1328	1328	1346	1346
Entry HV Adj Factor	0.981	1.000	0.978	0.986	0.975	0.975
Flow Entry, veh/h	103	36	70	70	75	39
Cap Entry, veh/h	1232	1225	1299	1309	1312	1312
V/C Ratio	0.084	0.029	0.054	0.053	0.057	0.030
Control Delay, s/veh	3.6	3.2	3.2	3.2	3.2	3.0
LOS	A	A	A	A	A	A
95th %tile Queue, veh	0	0	0	0	0	0

Intersection	
Int Delay, s/veh	3.5

Movement	EBT	EBR	WBL	WBT	NBL	NBR
Lane Configurations						
Traffic Vol, veh/h	0	0	0	0	0	0
Future Vol, veh/h	86	35	81	110	30	50
Conflicting Peds, #/hr	0	0	0	0	0	0
Sign Control	Free	Free	Free	Free	Stop	Stop
RT Channelized	-	None	-	None	-	None
Storage Length	-	-	150	-	-	150
Veh in Median Storage, #	0	-	-	0	0	-
Grade, %	0	-	-	0	0	-
Peak Hour Factor	100	100	100	100	100	100
Heavy Vehicles, %	2	2	2	2	2	2
Mvmt Flow	86	35	81	110	30	50

Major/Minor	Major1		Major2		Minor1	
Conflicting Flow All	0	0	121	0	321	61
Stage 1	-	-	-	-	104	-
Stage 2	-	-	-	-	217	-
Critical Hdwy	-	-	4.14	-	6.84	6.94
Critical Hdwy Stg 1	-	-	-	-	5.84	-
Critical Hdwy Stg 2	-	-	-	-	5.84	-
Follow-up Hdwy	-	-	2.22	-	3.52	3.32
Pot Cap-1 Maneuver	-	-	1464	-	648	991
Stage 1	-	-	-	-	909	-
Stage 2	-	-	-	-	798	-
Platoon blocked, %	-	-		-		
Mov Cap-1 Maneuver	-	-	1464	-	612	991
Mov Cap-2 Maneuver	-	-	-	-	612	-
Stage 1	-	-	-	-	909	-
Stage 2	-	-	-	-	754	-

Approach	EB	WB	NB
HCM Control Delay, s	0	3.2	9.7
HCM LOS			A

Minor Lane/Major Mvmt	NBLn1	NBLn2	EBT	EBR	WBL	WBT
Capacity (veh/h)	612	991	-	-	1464	-
HCM Lane V/C Ratio	0.049	0.05	-	-	0.055	-
HCM Control Delay (s)	11.2	8.8	-	-	7.6	-
HCM Lane LOS	B	A	-	-	A	-
HCM 95th %tile Q(veh)	0.2	0.2	-	-	0.2	-

Intersection	
Int Delay, s/veh	6.5

Movement	WBL	WBR	NBT	NBR	SBL	SBT
Lane Configurations						
Traffic Vol, veh/h	0	0	0	0	0	0
Future Vol, veh/h	0	62	18	0	101	15
Conflicting Peds, #/hr	0	0	0	0	0	0
Sign Control	Stop	Stop	Free	Free	Free	Free
RT Channelized	-	None	-	None	-	None
Storage Length	-	-	-	-	-	-
Veh in Median Storage, #	0	-	0	-	-	0
Grade, %	0	-	0	-	-	0
Peak Hour Factor	100	100	100	100	100	100
Heavy Vehicles, %	2	2	2	2	2	2
Mvmt Flow	0	62	18	0	101	15

Major/Minor	Minor1		Major1		Major2	
Conflicting Flow All	235	18	0	0	18	0
Stage 1	18	-	-	-	-	-
Stage 2	217	-	-	-	-	-
Critical Hdwy	6.42	6.22	-	-	4.12	-
Critical Hdwy Stg 1	5.42	-	-	-	-	-
Critical Hdwy Stg 2	5.42	-	-	-	-	-
Follow-up Hdwy	3.518	3.318	-	-	2.218	-
Pot Cap-1 Maneuver	753	1061	-	-	1599	-
Stage 1	1005	-	-	-	-	-
Stage 2	819	-	-	-	-	-
Platoon blocked, %			-	-		-
Mov Cap-1 Maneuver	705	1061	-	-	1599	-
Mov Cap-2 Maneuver	705	-	-	-	-	-
Stage 1	1005	-	-	-	-	-
Stage 2	767	-	-	-	-	-

Approach	WB	NB	SB
HCM Control Delay, s	8.6	0	6.4
HCM LOS	A		

Minor Lane/Major Mvmt	NBT	NBR	WBLn1	SBL	SBT
Capacity (veh/h)	-	-	1061	1599	-
HCM Lane V/C Ratio	-	-	0.058	0.063	-
HCM Control Delay (s)	-	-	8.6	7.4	0
HCM Lane LOS	-	-	A	A	A
HCM 95th %tile Q(veh)	-	-	0.2	0.2	-

Intersection	
Int Delay, s/veh	0.5

Movement	EBL	EBR	NBL	NBT	SBT	SBR
Lane Configurations						
Traffic Vol, veh/h	0	0	0	865	962	0
Future Vol, veh/h	0	72	0	914	985	78
Conflicting Peds, #/hr	0	0	0	0	0	0
Sign Control	Stop	Stop	Free	Free	Free	Free
RT Channelized	-	None	-	None	-	None
Storage Length	-	0	-	-	-	-
Veh in Median Storage, #	0	-	-	0	0	-
Grade, %	0	-	-	0	0	-
Peak Hour Factor	100	100	100	100	100	100
Heavy Vehicles, %	2	2	2	2	2	2
Mvmt Flow	0	72	0	914	985	78

Major/Minor	Minor2		Major1		Major2	
Conflicting Flow All	-	532	-	0	-	0
Stage 1	-	-	-	-	-	-
Stage 2	-	-	-	-	-	-
Critical Hdwy	-	6.94	-	-	-	-
Critical Hdwy Stg 1	-	-	-	-	-	-
Critical Hdwy Stg 2	-	-	-	-	-	-
Follow-up Hdwy	-	3.32	-	-	-	-
Pot Cap-1 Maneuver	0	492	0	-	-	-
Stage 1	0	-	0	-	-	-
Stage 2	0	-	0	-	-	-
Platoon blocked, %				-	-	-
Mov Cap-1 Maneuver	-	492	-	-	-	-
Mov Cap-2 Maneuver	-	-	-	-	-	-
Stage 1	-	-	-	-	-	-
Stage 2	-	-	-	-	-	-

Approach	EB	NB	SB
HCM Control Delay, s	13.6	0	0
HCM LOS	B		

Minor Lane/Major Mvmt	NBT	EBLn1	SBT	SBR
Capacity (veh/h)	-	492	-	-
HCM Lane V/C Ratio	-	0.146	-	-
HCM Control Delay (s)	-	13.6	-	-
HCM Lane LOS	-	B	-	-
HCM 95th %tile Q(veh)	-	0.5	-	-

Intersection	
Int Delay, s/veh	1.1

Movement	EBT	EBR	WBL	WBT	NBL	NBR
Lane Configurations						
Traffic Vol, veh/h	0	0	0	0	0	0
Future Vol, veh/h	143	6	8	137	18	14
Conflicting Peds, #/hr	0	0	0	0	0	0
Sign Control	Free	Free	Free	Free	Stop	Stop
RT Channelized	-	None	-	None	-	None
Storage Length	-	-	-	-	0	-
Veh in Median Storage, #	0	-	-	0	0	-
Grade, %	0	-	-	0	0	-
Peak Hour Factor	100	100	100	100	100	100
Heavy Vehicles, %	2	2	2	2	2	2
Mvmt Flow	143	6	8	137	18	14

Major/Minor	Major1		Major2		Minor1	
Conflicting Flow All	0	0	149	0	299	146
Stage 1	-	-	-	-	146	-
Stage 2	-	-	-	-	153	-
Critical Hdwy	-	-	4.12	-	6.42	6.22
Critical Hdwy Stg 1	-	-	-	-	5.42	-
Critical Hdwy Stg 2	-	-	-	-	5.42	-
Follow-up Hdwy	-	-	2.218	-	3.518	3.318
Pot Cap-1 Maneuver	-	-	1432	-	692	901
Stage 1	-	-	-	-	881	-
Stage 2	-	-	-	-	875	-
Platoon blocked, %	-	-		-		
Mov Cap-1 Maneuver	-	-	1432	-	688	901
Mov Cap-2 Maneuver	-	-	-	-	688	-
Stage 1	-	-	-	-	881	-
Stage 2	-	-	-	-	870	-

Approach	EB	WB	NB
HCM Control Delay, s	0	0.4	9.9
HCM LOS			A

Minor Lane/Major Mvmt	NBLn1	EBT	EBR	WBL	WBT
Capacity (veh/h)	767	-	-	1432	-
HCM Lane V/C Ratio	0.042	-	-	0.006	-
HCM Control Delay (s)	9.9	-	-	7.5	0
HCM Lane LOS	A	-	-	A	A
HCM 95th %tile Q(veh)	0.1	-	-	0	-

Intersection	
Int Delay, s/veh	2.3

Movement	EBL	EBR	NBL	NBT	SBT	SBR
Lane Configurations						
Traffic Vol, veh/h	0	0	0	0	0	0
Future Vol, veh/h	67	0	0	41	124	55
Conflicting Peds, #/hr	0	0	0	0	0	0
Sign Control	Stop	Stop	Free	Free	Free	Free
RT Channelized	-	None	-	None	-	None
Storage Length	0	-	0	-	-	-
Veh in Median Storage, #	0	-	-	0	0	-
Grade, %	0	-	-	0	0	-
Peak Hour Factor	100	100	100	100	100	100
Heavy Vehicles, %	2	2	2	2	2	2
Mvmt Flow	67	0	0	41	124	55

Major/Minor	Minor2		Major1		Major2	
Conflicting Flow All	193	152	179	0	-	0
Stage 1	152	-	-	-	-	-
Stage 2	41	-	-	-	-	-
Critical Hdwy	6.42	6.22	4.12	-	-	-
Critical Hdwy Stg 1	5.42	-	-	-	-	-
Critical Hdwy Stg 2	5.42	-	-	-	-	-
Follow-up Hdwy	3.518	3.318	2.218	-	-	-
Pot Cap-1 Maneuver	796	894	1397	-	-	-
Stage 1	876	-	-	-	-	-
Stage 2	981	-	-	-	-	-
Platoon blocked, %				-	-	-
Mov Cap-1 Maneuver	796	894	1397	-	-	-
Mov Cap-2 Maneuver	796	-	-	-	-	-
Stage 1	876	-	-	-	-	-
Stage 2	981	-	-	-	-	-

Approach	EB	NB	SB
HCM Control Delay, s	9.9	0	0
HCM LOS	A		

Minor Lane/Major Mvmt	NBL	NBT	EBLn1	SBT	SBR
Capacity (veh/h)	1397	-	796	-	-
HCM Lane V/C Ratio	-	-	0.084	-	-
HCM Control Delay (s)	0	-	9.9	-	-
HCM Lane LOS	A	-	A	-	-
HCM 95th %tile Q(veh)	0	-	0.3	-	-

Intersection	
Int Delay, s/veh	3.5

Movement	WBL	WBR	NBT	NBR	SBL	SBT
Lane Configurations						
Traffic Vol, veh/h	0	0	0	0	0	0
Future Vol, veh/h	0	67	39	0	55	120
Conflicting Peds, #/hr	0	0	0	0	0	0
Sign Control	Stop	Stop	Free	Free	Free	Free
RT Channelized	-	None	-	None	-	None
Storage Length	0	-	-	-	-	-
Veh in Median Storage, #	0	-	0	-	-	0
Grade, %	0	-	0	-	-	0
Peak Hour Factor	100	100	100	100	100	100
Heavy Vehicles, %	2	2	2	2	2	2
Mvmt Flow	0	67	39	0	55	120

Major/Minor	Minor1		Major1		Major2	
Conflicting Flow All	269	39	0	0	39	0
Stage 1	39	-	-	-	-	-
Stage 2	230	-	-	-	-	-
Critical Hdwy	6.42	6.22	-	-	4.12	-
Critical Hdwy Stg 1	5.42	-	-	-	-	-
Critical Hdwy Stg 2	5.42	-	-	-	-	-
Follow-up Hdwy	3.518	3.318	-	-	2.218	-
Pot Cap-1 Maneuver	720	1033	-	-	1571	-
Stage 1	983	-	-	-	-	-
Stage 2	808	-	-	-	-	-
Platoon blocked, %			-	-		-
Mov Cap-1 Maneuver	693	1033	-	-	1571	-
Mov Cap-2 Maneuver	693	-	-	-	-	-
Stage 1	983	-	-	-	-	-
Stage 2	777	-	-	-	-	-

Approach	WB	NB	SB
HCM Control Delay, s	8.7	0	2.3
HCM LOS	A		

Minor Lane/Major Mvmt	NBT	NBR	WBLn1	SBL	SBT
Capacity (veh/h)	-	-	1033	1571	-
HCM Lane V/C Ratio	-	-	0.065	0.035	-
HCM Control Delay (s)	-	-	8.7	7.4	0
HCM Lane LOS	-	-	A	A	A
HCM 95th %tile Q(veh)	-	-	0.2	0.1	-

Lane Group	EBT	EBR	WBL	WBT	NBL	NBR
Lane Group Flow (vph)	414	122	22	584	158	31
v/c Ratio	0.33	0.20	0.07	0.46	0.23	0.05
Control Delay	7.8	2.7	7.0	8.8	8.6	4.0
Queue Delay	0.0	0.0	0.0	0.0	0.0	0.0
Total Delay	7.8	2.7	7.0	8.8	8.6	4.0
Queue Length 50th (ft)	24	0	2	35	16	0
Queue Length 95th (ft)	41	16	10	58	47	10
Internal Link Dist (ft)	1563			2662	389	
Turn Bay Length (ft)		235	235		200	
Base Capacity (vph)	2267	1035	592	2267	680	627
Starvation Cap Reductn	0	0	0	0	0	0
Spillback Cap Reductn	0	0	0	0	0	0
Storage Cap Reductn	0	0	0	0	0	0
Reduced v/c Ratio	0.18	0.12	0.04	0.26	0.23	0.05

Intersection Summary

Movement	EBT	EBR	WBL	WBT	NBL	NBR
Lane Configurations						
Traffic Volume (veh/h)	164	0	0	317	0	0
Future Volume (veh/h)	414	122	22	584	158	31
Initial Q (Qb), veh	0	0	0	0	0	0
Ped-Bike Adj(A_pbT)		1.00	1.00		1.00	1.00
Parking Bus, Adj	1.00	1.00	1.00	1.00	1.00	1.00
Work Zone On Approach	No			No	No	
Adj Sat Flow, veh/h/ln	1870	1870	1870	1870	1870	1870
Adj Flow Rate, veh/h	414	122	22	584	158	31
Peak Hour Factor	1.00	1.00	1.00	1.00	1.00	1.00
Percent Heavy Veh, %	2	2	2	2	2	2
Cap, veh/h	1130	477	429	1130	729	649
Arrive On Green	0.32	0.30	0.30	0.32	0.41	0.41
Sat Flow, veh/h	3647	1585	869	3647	1781	1585
Grp Volume(v), veh/h	414	122	22	584	158	31
Grp Sat Flow(s),veh/h/ln	1777	1585	869	1777	1781	1585
Q Serve(g_s), s	2.6	1.7	0.6	3.9	1.7	0.3
Cycle Q Clear(g_c), s	2.6	1.7	3.2	3.9	1.7	0.3
Prop In Lane		1.00	1.00		1.00	1.00
Lane Grp Cap(c), veh/h	1130	477	429	1130	729	649
V/C Ratio(X)	0.37	0.26	0.05	0.52	0.22	0.05
Avail Cap(c_a), veh/h	2423	1054	745	2423	729	649
HCM Platoon Ratio	1.00	1.00	1.00	1.00	1.00	1.00
Upstream Filter(I)	1.00	1.00	1.00	1.00	1.00	1.00
Uniform Delay (d), s/veh	7.7	7.8	9.4	8.2	5.6	5.2
Incr Delay (d2), s/veh	0.2	0.3	0.0	0.4	0.7	0.1
Initial Q Delay(d3),s/veh	0.0	0.0	0.0	0.0	0.0	0.0
%ile BackOfQ(50%),veh/ln	0.4	0.3	0.1	0.6	0.5	0.1
Unsig. Movement Delay, s/veh						
LnGrp Delay(d),s/veh	7.9	8.0	9.4	8.5	6.3	5.4
LnGrp LOS	A	A	A	A	A	A
Approach Vol, veh/h	536			606	189	
Approach Delay, s/veh	7.9			8.6	6.1	
Approach LOS	A			A	A	

Timer - Assigned Phs		2		4			8
Phs Duration (G+Y+Rc), s		16.0		13.3			13.3
Change Period (Y+Rc), s		4.5		4.5			4.5
Max Green Setting (Gmax), s		11.5		19.5			19.5
Max Q Clear Time (g_c+I1), s		3.7		4.6			5.9
Green Ext Time (p_c), s		0.3		2.3			2.9

Intersection Summary	
HCM 6th Ctrl Delay	8.0
HCM 6th LOS	A

Lane Group	EBT	EBR	WBL	WBT	NBL	NBR
Lane Group Flow (vph)	253	192	17	337	269	20
v/c Ratio	0.21	0.30	0.04	0.27	0.30	0.02
Control Delay	7.4	3.2	7.6	7.6	7.3	3.3
Queue Delay	0.0	0.0	0.0	0.0	0.0	0.0
Total Delay	7.4	3.2	7.6	7.6	7.3	3.3
Queue Length 50th (ft)	11	0	1	15	23	0
Queue Length 95th (ft)	30	23	9	39	62	6
Internal Link Dist (ft)	2662			2074	294	
Turn Bay Length (ft)		235	235			
Base Capacity (vph)	2611	1198	855	2611	1306	1173
Starvation Cap Reductn	0	0	0	0	0	0
Spillback Cap Reductn	0	0	0	0	0	0
Storage Cap Reductn	0	0	0	0	0	0
Reduced v/c Ratio	0.10	0.16	0.02	0.13	0.21	0.02

Intersection Summary

Movement	EBT	EBR	WBL	WBT	NBL	NBR
Lane Configurations						
Traffic Volume (veh/h)	164	0	0	317	0	0
Future Volume (veh/h)	253	192	17	337	269	20
Initial Q (Qb), veh	0	0	0	0	0	0
Ped-Bike Adj(A_pbT)		1.00	1.00		1.00	1.00
Parking Bus, Adj	1.00	1.00	1.00	1.00	1.00	1.00
Work Zone On Approach	No			No	No	
Adj Sat Flow, veh/h/ln	1870	1870	1870	1870	1870	1870
Adj Flow Rate, veh/h	253	192	17	337	269	20
Peak Hour Factor	1.00	1.00	1.00	1.00	1.00	1.00
Percent Heavy Veh, %	2	2	2	2	2	2
Cap, veh/h	1088	445	579	1088	515	458
Arrive On Green	0.31	0.28	0.28	0.31	0.29	0.29
Sat Flow, veh/h	3647	1585	945	3647	1781	1585
Grp Volume(v), veh/h	253	192	17	337	269	20
Grp Sat Flow(s),veh/h/ln	1777	1585	945	1777	1781	1585
Q Serve(g_s), s	1.1	2.0	0.3	1.4	2.5	0.2
Cycle Q Clear(g_c), s	1.1	2.0	1.3	1.4	2.5	0.2
Prop In Lane		1.00	1.00		1.00	1.00
Lane Grp Cap(c), veh/h	1088	445	579	1088	515	458
V/C Ratio(X)	0.23	0.43	0.03	0.31	0.52	0.04
Avail Cap(c_a), veh/h	3327	1444	1175	3327	1668	1484
HCM Platoon Ratio	1.00	1.00	1.00	1.00	1.00	1.00
Upstream Filter(I)	1.00	1.00	1.00	1.00	1.00	1.00
Uniform Delay (d), s/veh	5.1	5.8	6.0	5.3	5.9	5.1
Incr Delay (d2), s/veh	0.1	0.7	0.0	0.2	0.8	0.0
Initial Q Delay(d3),s/veh	0.0	0.0	0.0	0.0	0.0	0.0
%ile BackOfQ(50%),veh/ln	0.0	0.1	0.0	0.0	0.4	0.0
Unsig. Movement Delay, s/veh						
LnGrp Delay(d),s/veh	5.2	6.5	6.0	5.4	6.7	5.1
LnGrp LOS	A	A	A	A	A	A
Approach Vol, veh/h	445			354	289	
Approach Delay, s/veh	5.8			5.4	6.6	
Approach LOS	A			A	A	

Timer - Assigned Phs		2		4			8
Phs Duration (G+Y+Rc), s		9.7		10.0			10.0
Change Period (Y+Rc), s		4.5		4.5			4.5
Max Green Setting (Gmax), s		18.0		18.0			18.0
Max Q Clear Time (g_c+I1), s		4.5		4.0			3.4
Green Ext Time (p_c), s		0.7		1.7			1.6

Intersection Summary	
HCM 6th Ctrl Delay	5.9
HCM 6th LOS	A

Lane Group	EBL	EBT	EBR	WBL	WBT	WBR	NBL	NBT	NBR	SBL	SBT	SBR
Lane Group Flow (vph)	211	364	118	348	274	208	65	668	480	238	826	300
v/c Ratio	0.55	0.63	0.29	0.86	0.36	0.41	0.22	0.54	0.58	0.58	0.53	0.35
Control Delay	28.3	43.6	3.1	45.1	34.0	7.2	15.3	28.6	8.1	19.5	22.8	3.6
Queue Delay	0.0	0.0	0.0	0.0	0.0	0.0	0.0	0.0	0.0	0.0	0.0	0.0
Total Delay	28.3	43.6	3.1	45.1	34.0	7.2	15.3	28.6	8.1	19.5	22.8	3.6
Queue Length 50th (ft)	93	115	0	169	78	0	20	177	28	79	205	0
Queue Length 95th (ft)	150	162	13	#279	116	56	45	265	131	140	288	51
Internal Link Dist (ft)		911			760			1157			1874	
Turn Bay Length (ft)	235		450	200		400	700		600			490
Base Capacity (vph)	394	1314	699	422	1518	798	303	1242	825	464	1566	867
Starvation Cap Reductn	0	0	0	0	0	0	0	0	0	0	0	0
Spillback Cap Reductn	0	0	0	0	0	0	0	0	0	0	0	0
Storage Cap Reductn	0	0	0	0	0	0	0	0	0	0	0	0
Reduced v/c Ratio	0.54	0.28	0.17	0.82	0.18	0.26	0.21	0.54	0.58	0.51	0.53	0.35

Intersection Summary

95th percentile volume exceeds capacity, queue may be longer.
Queue shown is maximum after two cycles.

Movement	EBL	EBT	EBR	WBL	WBT	WBR	NBL	NBT	NBR	SBL	SBT	SBR
Lane Configurations												
Traffic Volume (veh/h)	194	285	109	145	213	72	60	615	156	68	760	276
Future Volume (veh/h)	194	335	109	320	252	191	60	615	442	219	760	276
Initial Q (Qb), veh	0	0	0	0	0	0	0	0	0	0	0	0
Ped-Bike Adj(A_pbT)	1.00		1.00	1.00		1.00	1.00		1.00	1.00		1.00
Parking Bus, Adj	1.00	1.00	1.00	1.00	1.00	1.00	1.00	1.00	1.00	1.00	1.00	1.00
Work Zone On Approach		No			No			No			No	
Adj Sat Flow, veh/h/ln	1870	1870	1870	1870	1870	1870	1870	1870	1870	1870	1870	1870
Adj Flow Rate, veh/h	211	364	0	348	274	0	65	668	0	238	826	0
Peak Hour Factor	0.92	0.92	0.92	0.92	0.92	0.92	0.92	0.92	0.92	0.92	0.92	0.92
Percent Heavy Veh, %	2	2	2	2	2	2	2	2	2	2	2	2
Cap, veh/h	442	512		444	728		335	1370		442	1575	
Arrive On Green	0.12	0.14	0.00	0.18	0.20	0.00	0.04	0.39	0.00	0.10	0.44	0.00
Sat Flow, veh/h	1781	3554	1585	1781	3554	1585	1781	3554	1585	1781	3554	1585
Grp Volume(v), veh/h	211	364	0	348	274	0	65	668	0	238	826	0
Grp Sat Flow(s),veh/h/ln	1781	1777	1585	1781	1777	1585	1781	1777	1585	1781	1777	1585
Q Serve(g_s), s	9.4	9.3	0.0	15.1	6.3	0.0	2.1	13.5	0.0	7.2	16.1	0.0
Cycle Q Clear(g_c), s	9.4	9.3	0.0	15.1	6.3	0.0	2.1	13.5	0.0	7.2	16.1	0.0
Prop In Lane	1.00		1.00	1.00		1.00	1.00		1.00	1.00		1.00
Lane Grp Cap(c), veh/h	442	512		444	728		335	1370		442	1575	
V/C Ratio(X)	0.48	0.71		0.78	0.38		0.19	0.49		0.54	0.52	
Avail Cap(c_a), veh/h	451	1344		450	1553		376	1370		571	1575	
HCM Platoon Ratio	1.00	1.00	1.00	1.00	1.00	1.00	1.00	1.00	1.00	1.00	1.00	1.00
Upstream Filter(I)	1.00	1.00	0.00	1.00	1.00	0.00	1.00	1.00	0.00	1.00	1.00	0.00
Uniform Delay (d), s/veh	29.3	38.8	0.0	26.3	32.6	0.0	16.8	22.1	0.0	15.2	19.2	0.0
Incr Delay (d2), s/veh	0.8	1.8	0.0	8.7	0.3	0.0	0.3	1.2	0.0	1.0	1.3	0.0
Initial Q Delay(d3),s/veh	0.0	0.0	0.0	0.0	0.0	0.0	0.0	0.0	0.0	0.0	0.0	0.0
%ile BackOfQ(50%),veh/ln	4.1	4.1	0.0	7.3	2.7	0.0	0.8	5.7	0.0	2.9	6.7	0.0
Unsig. Movement Delay, s/veh												
LnGrp Delay(d),s/veh	30.1	40.7	0.0	35.0	32.9	0.0	17.1	23.4	0.0	16.2	20.5	0.0
LnGrp LOS	C	D		C	C		B	C		B	C	
Approach Vol, veh/h		575	A		622	A		733	A		1064	A
Approach Delay, s/veh		36.8			34.1			22.8			19.5	
Approach LOS		D			C			C			B	

Timer - Assigned Phs	1	2	3	4	5	6	7	8
Phs Duration (G+Y+Rc), s	14.1	41.2	21.7	18.2	8.6	46.7	15.9	24.0
Change Period (Y+Rc), s	4.5	4.5	4.5	4.5	4.5	4.5	4.5	4.5
Max Green Setting (Gmax), s	16.5	32.0	17.5	36.0	6.3	42.2	11.9	41.6
Max Q Clear Time (g_c+I1), s	9.2	15.5	17.1	11.3	4.1	18.1	11.4	8.3
Green Ext Time (p_c), s	0.4	4.2	0.1	2.4	0.0	6.3	0.0	1.9

Intersection Summary	
HCM 6th Ctrl Delay	26.7
HCM 6th LOS	C

Notes

Unsignalized Delay for [NBR, EBR, WBR, SBR] is excluded from calculations of the approach delay and intersection delay.

Intersection	
Int Delay, s/veh	0.3

Movement	EBT	EBR	WBL	WBT	NBL	NBR
Lane Configurations						
Traffic Vol, veh/h	473	14	5	339	11	6
Future Vol, veh/h	960	14	5	672	11	6
Conflicting Peds, #/hr	0	0	0	0	0	0
Sign Control	Free	Free	Free	Free	Stop	Stop
RT Channelized	-	None	-	None	-	None
Storage Length	-	235	235	-	0	-
Veh in Median Storage, #	0	-	-	0	0	-
Grade, %	0	-	-	0	0	-
Peak Hour Factor	92	92	92	92	92	92
Heavy Vehicles, %	2	2	2	2	2	2
Mvmt Flow	1043	15	5	730	12	7

Major/Minor	Major1		Major2		Minor1	
Conflicting Flow All	0	0	1058	0	1418	522
Stage 1	-	-	-	-	1043	-
Stage 2	-	-	-	-	375	-
Critical Hdwy	-	-	4.14	-	6.84	6.94
Critical Hdwy Stg 1	-	-	-	-	5.84	-
Critical Hdwy Stg 2	-	-	-	-	5.84	-
Follow-up Hdwy	-	-	2.22	-	3.52	3.32
Pot Cap-1 Maneuver	-	-	654	-	128	499
Stage 1	-	-	-	-	300	-
Stage 2	-	-	-	-	665	-
Platoon blocked, %	-	-		-		
Mov Cap-1 Maneuver	-	-	654	-	127	499
Mov Cap-2 Maneuver	-	-	-	-	127	-
Stage 1	-	-	-	-	300	-
Stage 2	-	-	-	-	660	-

Approach	EB	WB	NB
HCM Control Delay, s	0	0.1	28.4
HCM LOS			D

Minor Lane/Major Mvmt	NBLn1	EBT	EBR	WBL	WBT
Capacity (veh/h)	172	-	-	654	-
HCM Lane V/C Ratio	0.107	-	-	0.008	-
HCM Control Delay (s)	28.4	-	-	10.6	-
HCM Lane LOS	D	-	-	B	-
HCM 95th %tile Q(veh)	0.4	-	-	0	-

Lane Group	EBL	EBT	EBR	WBL	WBT	WBR	NBL	NBT	NBR	SBL	SBT	SBR
Lane Group Flow (vph)	105	1423	242	349	854	486	137	292	543	795	397	115
v/c Ratio	0.46	0.92	0.34	0.98	0.71	0.47	0.54	0.39	0.89	0.96	0.30	0.15
Control Delay	64.9	54.4	14.8	100.9	41.3	9.7	65.9	45.9	51.3	70.9	29.1	11.0
Queue Delay	0.0	0.0	0.0	0.0	0.0	0.0	0.0	0.0	0.0	0.0	0.0	0.0
Total Delay	64.9	54.4	14.8	100.9	41.3	9.7	65.9	45.9	51.3	70.9	29.1	11.0
Queue Length 50th (ft)	44	424	69	153	330	128	58	112	372	342	123	28
Queue Length 95th (ft)	75	#514	134	#254	407	207	92	157	#590	#468	165	63
Internal Link Dist (ft)		664			834			1448			1908	
Turn Bay Length (ft)	225		100				455		455	385		385
Base Capacity (vph)	250	1545	728	356	1206	1044	277	748	611	831	1342	798
Starvation Cap Reductn	0	0	0	0	0	0	0	0	0	0	0	0
Spillback Cap Reductn	0	0	0	0	0	0	0	0	0	0	0	0
Storage Cap Reductn	0	0	0	0	0	0	0	0	0	0	0	0
Reduced v/c Ratio	0.42	0.92	0.33	0.98	0.71	0.47	0.49	0.39	0.89	0.96	0.30	0.14

Intersection Summary

95th percentile volume exceeds capacity, queue may be longer.
Queue shown is maximum after two cycles.

Movement	EBL	EBT	EBR	WBL	WBT	WBR	NBL	NBT	NBR	SBL	SBT	SBR
Lane Configurations												
Traffic Volume (veh/h)	70	1299	152	307	772	447	126	233	489	731	323	65
Future Volume (veh/h)	97	1309	223	321	786	447	126	269	500	731	365	106
Initial Q (Qb), veh	0	0	0	0	0	0	0	0	0	0	0	0
Ped-Bike Adj(A_pbT)	1.00		1.00	1.00		1.00	1.00		1.00	1.00		1.00
Parking Bus, Adj	1.00	1.00	1.00	1.00	1.00	1.00	1.00	1.00	1.00	1.00	1.00	1.00
Work Zone On Approach		No			No			No			No	
Adj Sat Flow, veh/h/ln	1870	1870	1870	1870	1870	1870	1870	1870	1870	1870	1870	1870
Adj Flow Rate, veh/h	105	1423	0	349	854	0	137	292	0	795	397	0
Peak Hour Factor	0.92	0.92	0.92	0.92	0.92	0.92	0.92	0.92	0.92	0.92	0.92	0.92
Percent Heavy Veh, %	2	2	2	2	2	2	2	2	2	2	2	2
Cap, veh/h	155	1537		361	1281		190	756		838	1422	
Arrive On Green	0.04	0.30	0.00	0.10	0.36	0.00	0.05	0.21	0.00	0.24	0.40	0.00
Sat Flow, veh/h	3456	5106	1585	3456	3554	1585	3456	3554	1585	3456	3554	1585
Grp Volume(v), veh/h	105	1423	0	349	854	0	137	292	0	795	397	0
Grp Sat Flow(s),veh/h/ln	1728	1702	1585	1728	1777	1585	1728	1777	1585	1728	1777	1585
Q Serve(g_s), s	3.9	34.9	0.0	13.0	26.2	0.0	5.0	9.1	0.0	29.3	9.8	0.0
Cycle Q Clear(g_c), s	3.9	34.9	0.0	13.0	26.2	0.0	5.0	9.1	0.0	29.3	9.8	0.0
Prop In Lane	1.00		1.00	1.00		1.00	1.00		1.00	1.00		1.00
Lane Grp Cap(c), veh/h	155	1537		361	1281		190	756		838	1422	
V/C Ratio(X)	0.68	0.93		0.97	0.67		0.72	0.39		0.95	0.28	
Avail Cap(c_a), veh/h	254	1560		361	1281		281	756		842	1422	
HCM Platoon Ratio	1.00	1.00	1.00	1.00	1.00	1.00	1.00	1.00	1.00	1.00	1.00	1.00
Upstream Filter(I)	1.00	1.00	0.00	1.00	1.00	0.00	1.00	1.00	0.00	1.00	1.00	0.00
Uniform Delay (d), s/veh	60.8	43.8	0.0	57.7	34.8	0.0	60.1	43.7	0.0	48.2	26.2	0.0
Incr Delay (d2), s/veh	5.0	9.7	0.0	38.6	1.3	0.0	5.1	1.5	0.0	19.6	0.5	0.0
Initial Q Delay(d3),s/veh	0.0	0.0	0.0	0.0	0.0	0.0	0.0	0.0	0.0	0.0	0.0	0.0
%ile BackOfQ(50%),veh/ln	1.8	16.0	0.0	7.6	11.5	0.0	2.3	4.2	0.0	14.8	4.3	0.0
Unsig. Movement Delay, s/veh												
LnGrp Delay(d),s/veh	65.9	53.5	0.0	96.3	36.1	0.0	65.2	45.1	0.0	67.7	26.7	0.0
LnGrp LOS	E	D		F	D		E	D		E	C	
Approach Vol, veh/h		1528	A		1203	A		429	A		1192	A
Approach Delay, s/veh		54.3			53.6			51.6			54.1	
Approach LOS		D			D			D			D	

Timer - Assigned Phs	1	2	3	4	5	6	7	8
Phs Duration (G+Y+Rc), s	35.9	32.0	18.0	43.4	11.6	56.3	10.3	51.1
Change Period (Y+Rc), s	4.5	4.5	4.5	4.5	4.5	4.5	4.5	4.5
Max Green Setting (Gmax), s	31.5	27.5	13.5	39.5	10.5	48.5	9.5	43.5
Max Q Clear Time (g_c+I1), s	31.3	11.1	15.0	36.9	7.0	11.8	5.9	28.2
Green Ext Time (p_c), s	0.1	1.6	0.0	2.0	0.1	2.9	0.1	5.4

Intersection Summary	
HCM 6th Ctrl Delay	53.8
HCM 6th LOS	D

Notes

Unsignalized Delay for [NBR, EBR, WBR, SBR] is excluded from calculations of the approach delay and intersection delay.

Lane Group	EBL	EBT	WBL	WBT	NBL	NBT	NBR	SBL	SBT	SBR
Lane Group Flow (vph)	51	61	307	136	173	807	496	134	880	37
v/c Ratio	0.28	0.22	0.51	0.27	0.54	0.41	0.45	0.57	0.68	0.06
Control Delay	27.3	12.9	19.1	9.0	14.3	8.5	2.4	26.5	18.3	0.1
Queue Delay	0.0	0.0	0.0	0.0	0.0	0.0	0.0	0.0	0.0	0.0
Total Delay	27.3	12.9	19.1	9.0	14.3	8.5	2.4	26.5	18.3	0.1
Queue Length 50th (ft)	16	5	42	13	27	77	0	36	130	0
Queue Length 95th (ft)	45	33	71	48	#64	126	37	#100	200	0
Internal Link Dist (ft)		818		800		2717			1066	
Turn Bay Length (ft)			250		250		250	400		200
Base Capacity (vph)	662	900	601	1181	321	2247	1186	287	1576	784
Starvation Cap Reductn	0	0	0	0	0	0	0	0	0	0
Spillback Cap Reductn	0	0	0	0	0	0	0	0	0	0
Storage Cap Reductn	0	0	0	0	0	0	0	0	0	0
Reduced v/c Ratio	0.08	0.07	0.51	0.12	0.54	0.36	0.42	0.47	0.56	0.05

Intersection Summary

95th percentile volume exceeds capacity, queue may be longer.
Queue shown is maximum after two cycles.

Movement	EBL	EBT	EBR	WBL	WBT	WBR	NBL	NBT	NBR	SBL	SBT	SBR
Lane Configurations												
Traffic Volume (veh/h)	0	0	0	282	0	105	0	742	456	123	660	0
Future Volume (veh/h)	47	15	41	282	20	105	159	742	456	123	810	34
Initial Q (Qb), veh	0	0	0	0	0	0	0	0	0	0	0	0
Ped-Bike Adj(A_pbT)	1.00		1.00	1.00		1.00	1.00		1.00	1.00		1.00
Parking Bus, Adj	1.00	1.00	1.00	1.00	1.00	1.00	1.00	1.00	1.00	1.00	1.00	1.00
Work Zone On Approach		No			No			No			No	
Adj Sat Flow, veh/h/ln	1870	1870	1870	1870	1870	1870	1870	1870	1870	1870	1870	1870
Adj Flow Rate, veh/h	51	16	45	307	22	114	173	807	496	134	880	37
Peak Hour Factor	0.92	0.92	0.92	0.92	0.92	0.92	0.92	0.92	0.92	0.92	0.92	0.92
Percent Heavy Veh, %	2	2	2	2	2	2	2	2	2	2	2	2
Cap, veh/h	250	40	112	744	71	368	404	1991	888	300	1382	617
Arrive On Green	0.09	0.09	0.09	0.09	0.27	0.27	0.09	0.56	0.56	0.39	0.39	0.39
Sat Flow, veh/h	1253	433	1218	3456	263	1362	1781	3554	1585	423	3554	1585
Grp Volume(v), veh/h	51	0	61	307	0	136	173	807	496	134	880	37
Grp Sat Flow(s),veh/h/ln	1253	0	1651	1728	0	1625	1781	1777	1585	423	1777	1585
Q Serve(g_s), s	2.0	0.0	1.9	4.0	0.0	3.5	2.8	6.9	10.6	15.1	10.7	0.8
Cycle Q Clear(g_c), s	2.0	0.0	1.9	4.0	0.0	3.5	2.8	6.9	10.6	15.1	10.7	0.8
Prop In Lane	1.00		0.74	1.00		0.84	1.00		1.00	1.00		1.00
Lane Grp Cap(c), veh/h	250	0	151	744	0	439	404	1991	888	300	1382	617
V/C Ratio(X)	0.20	0.00	0.40	0.41	0.00	0.31	0.43	0.41	0.56	0.45	0.64	0.06
Avail Cap(c_a), veh/h	796	0	870	744	0	1146	434	2239	999	322	1571	701
HCM Platoon Ratio	1.00	1.00	1.00	1.00	1.00	1.00	1.00	1.00	1.00	1.00	1.00	1.00
Upstream Filter(I)	1.00	0.00	1.00	1.00	0.00	1.00	1.00	1.00	1.00	1.00	1.00	1.00
Uniform Delay (d), s/veh	22.9	0.0	22.8	17.8	0.0	15.4	9.1	6.6	7.5	14.5	13.2	10.2
Incr Delay (d2), s/veh	0.4	0.0	1.7	0.4	0.0	0.4	0.7	0.1	0.6	1.0	0.7	0.0
Initial Q Delay(d3),s/veh	0.0	0.0	0.0	0.0	0.0	0.0	0.0	0.0	0.0	0.0	0.0	0.0
%ile BackOfQ(50%),veh/ln	0.6	0.0	0.7	1.5	0.0	1.2	0.7	1.3	2.7	1.1	3.1	0.2
Unsig. Movement Delay, s/veh												
LnGrp Delay(d),s/veh	23.3	0.0	24.5	18.1	0.0	15.8	9.8	6.8	8.0	15.6	13.9	10.2
LnGrp LOS	C	A	C	B	A	B	A	A	A	B	B	B
Approach Vol, veh/h		112			443			1476			1051	
Approach Delay, s/veh		23.9			17.4			7.6			14.0	
Approach LOS		C			B			A			B	

Timer - Assigned Phs		2	3	4	5	6		8				
Phs Duration (G+Y+Rc), s		34.3	9.5	9.4	9.1	25.2		18.9				
Change Period (Y+Rc), s		4.5	4.5	4.5	4.5	4.5		4.5				
Max Green Setting (Gmax), s		33.5	5.0	28.0	5.5	23.5		37.5				
Max Q Clear Time (g_c+I1), s		12.6	6.0	4.0	4.8	17.1		5.5				
Green Ext Time (p_c), s		6.8	0.0	0.5	0.0	3.6		0.8				

Intersection Summary	
HCM 6th Ctrl Delay	11.8
HCM 6th LOS	B

Lane Group	EBL	EBT	EBR	WBL	WBT	WBR	NBL	NBT	NBR	SBL	SBT	SBR
Lane Group Flow (vph)	653	391	157	82	340	122	109	257	54	124	355	479
v/c Ratio	0.61	0.18	0.15	0.40	0.45	0.28	0.49	0.32	0.13	0.49	0.44	0.44
Control Delay	21.8	5.8	1.7	26.4	21.9	6.6	27.9	19.4	4.4	26.7	20.6	4.1
Queue Delay	0.0	0.0	0.0	0.0	0.0	0.0	0.0	0.0	0.0	0.0	0.0	0.0
Total Delay	21.8	5.8	1.7	26.4	21.9	6.6	27.9	19.4	4.4	26.7	20.6	4.1
Queue Length 50th (ft)	90	24	0	23	51	0	31	36	0	35	52	25
Queue Length 95th (ft)	#204	60	22	66	98	36	81	72	17	89	98	87
Internal Link Dist (ft)		726			925			690			2070	
Turn Bay Length (ft)	300		275	300		275	300		275	300		500
Base Capacity (vph)	1089	3135	1420	492	1796	864	542	1989	921	620	1989	1093
Starvation Cap Reductn	0	0	0	0	0	0	0	0	0	0	0	0
Spillback Cap Reductn	0	0	0	0	0	0	0	0	0	0	0	0
Storage Cap Reductn	0	0	0	0	0	0	0	0	0	0	0	0
Reduced v/c Ratio	0.60	0.12	0.11	0.17	0.19	0.14	0.20	0.13	0.06	0.20	0.18	0.44

Intersection Summary

95th percentile volume exceeds capacity, queue may be longer.
Queue shown is maximum after two cycles.

Movement	EBL	EBT	EBR	WBL	WBT	WBR	NBL	NBT	NBR	SBL	SBT	SBR
Lane Configurations												
Traffic Volume (veh/h)	484	352	129	75	302	101	81	205	50	101	303	287
Future Volume (veh/h)	601	360	144	75	313	112	100	236	50	114	327	441
Initial Q (Qb), veh	0	0	0	0	0	0	0	0	0	0	0	0
Ped-Bike Adj(A_pbT)	1.00		1.00	1.00		1.00	1.00		1.00	1.00		1.00
Parking Bus, Adj	1.00	1.00	1.00	1.00	1.00	1.00	1.00	1.00	1.00	1.00	1.00	1.00
Work Zone On Approach		No			No			No			No	
Adj Sat Flow, veh/h/ln	1870	1870	1870	1870	1870	1870	1870	1870	1870	1870	1870	1870
Adj Flow Rate, veh/h	653	391	157	82	340	122	109	257	54	124	355	479
Peak Hour Factor	0.92	0.92	0.92	0.92	0.92	0.92	0.92	0.92	0.92	0.92	0.92	0.92
Percent Heavy Veh, %	2	2	2	2	2	2	2	2	2	2	2	2
Cap, veh/h	837	1817	810	295	652	291	296	1128	503	419	1128	887
Arrive On Green	0.24	0.51	0.51	0.18	0.18	0.18	0.32	0.32	0.32	0.32	0.32	0.32
Sat Flow, veh/h	3456	3554	1585	859	3554	1585	658	3554	1585	1068	3554	1585
Grp Volume(v), veh/h	653	391	157	82	340	122	109	257	54	124	355	479
Grp Sat Flow(s),veh/h/ln	1728	1777	1585	859	1777	1585	658	1777	1585	1068	1777	1585
Q Serve(g_s), s	9.3	3.2	2.8	4.5	4.5	3.6	7.9	2.8	1.3	5.1	4.0	10.0
Cycle Q Clear(g_c), s	9.3	3.2	2.8	4.5	4.5	3.6	11.9	2.8	1.3	7.9	4.0	10.0
Prop In Lane	1.00		1.00	1.00		1.00	1.00		1.00	1.00		1.00
Lane Grp Cap(c), veh/h	837	1817	810	295	652	291	296	1128	503	419	1128	887
V/C Ratio(X)	0.78	0.22	0.19	0.28	0.52	0.42	0.37	0.23	0.11	0.30	0.31	0.54
Avail Cap(c_a), veh/h	1151	3381	1508	595	1893	844	475	2096	935	710	2096	1319
HCM Platoon Ratio	1.00	1.00	1.00	1.00	1.00	1.00	1.00	1.00	1.00	1.00	1.00	1.00
Upstream Filter(I)	1.00	1.00	1.00	1.00	1.00	1.00	1.00	1.00	1.00	1.00	1.00	1.00
Uniform Delay (d), s/veh	18.6	7.1	7.0	19.4	19.4	19.0	18.1	13.2	12.7	16.1	13.6	7.3
Incr Delay (d2), s/veh	2.4	0.1	0.1	0.5	0.6	1.0	0.8	0.1	0.1	0.4	0.2	0.5
Initial Q Delay(d3),s/veh	0.0	0.0	0.0	0.0	0.0	0.0	0.0	0.0	0.0	0.0	0.0	0.0
%ile BackOfQ(50%),veh/ln	3.6	0.9	0.8	0.9	1.8	1.3	1.1	1.0	0.4	1.1	1.4	2.6
Unsig. Movement Delay, s/veh												
LnGrp Delay(d),s/veh	21.0	7.1	7.1	19.9	20.0	19.9	18.9	13.3	12.8	16.5	13.8	7.8
LnGrp LOS	C	A	A	B	C	B	B	B	B	B	B	A
Approach Vol, veh/h		1201			544			420			958	
Approach Delay, s/veh		14.7			20.0			14.7			11.1	
Approach LOS		B			B			B			B	

Timer - Assigned Phs		2		4		6	7	8				
Phs Duration (G+Y+Rc), s		21.2		31.4		21.2	17.2	14.1				
Change Period (Y+Rc), s		4.5		4.5		4.5	4.5	4.5				
Max Green Setting (Gmax), s		31.0		50.0		31.0	17.5	28.0				
Max Q Clear Time (g_c+I1), s		13.9		5.2		12.0	11.3	6.5				
Green Ext Time (p_c), s		2.5		3.4		4.7	1.4	3.1				

Intersection Summary												
HCM 6th Ctrl Delay			14.5									
HCM 6th LOS			B									

Lane Group	EBL	EBT	EBR	WBL	WBT	WBR	NBL	NBT	SBL	SBT
Lane Group Flow (vph)	473	1059	68	14	729	186	40	14	134	355
v/c Ratio	0.86	0.48	0.07	0.09	0.64	0.29	0.18	0.06	0.47	0.66
Control Delay	32.5	8.4	2.2	18.6	22.3	4.6	21.8	19.4	27.6	10.4
Queue Delay	0.0	0.0	0.0	0.0	0.0	0.0	0.0	0.0	0.0	0.0
Total Delay	32.5	8.4	2.2	18.6	22.3	4.6	21.8	19.4	27.6	10.4
Queue Length 50th (ft)	109	101	0	4	125	0	12	2	44	2
Queue Length 95th (ft)	#366	208	15	18	216	41	36	17	94	72
Internal Link Dist (ft)		2031			726			424		524
Turn Bay Length (ft)	485		275	235		275	235		235	
Base Capacity (vph)	548	2623	1191	222	1563	803	224	788	285	925
Starvation Cap Reductn	0	0	0	0	0	0	0	0	0	0
Spillback Cap Reductn	0	0	0	0	0	0	0	0	0	0
Storage Cap Reductn	0	0	0	0	0	0	0	0	0	0
Reduced v/c Ratio	0.86	0.40	0.06	0.06	0.47	0.23	0.18	0.02	0.47	0.38

Intersection Summary

95th percentile volume exceeds capacity, queue may be longer.
Queue shown is maximum after two cycles.

Movement	EBL	EBT	EBR	WBL	WBT	WBR	NBL	NBT	NBR	SBL	SBT	SBR
Lane Configurations												
Traffic Volume (veh/h)	361	857	63	13	517	141	37	5	8	100	5	262
Future Volume (veh/h)	435	974	63	13	671	171	37	5	8	123	5	322
Initial Q (Qb), veh	0	0	0	0	0	0	0	0	0	0	0	0
Ped-Bike Adj(A_pbT)	1.00		1.00	1.00		1.00	1.00		1.00	1.00		1.00
Parking Bus, Adj	1.00	1.00	1.00	1.00	1.00	1.00	1.00	1.00	1.00	1.00	1.00	1.00
Work Zone On Approach		No			No			No			No	
Adj Sat Flow, veh/h/ln	1870	1870	1870	1870	1870	1870	1870	1870	1870	1870	1870	1870
Adj Flow Rate, veh/h	473	1059	68	14	729	186	40	5	9	134	5	350
Peak Hour Factor	0.92	0.92	0.92	0.92	0.92	0.92	0.92	0.92	0.92	0.92	0.92	0.92
Percent Heavy Veh, %	2	2	2	2	2	2	2	2	2	2	2	2
Cap, veh/h	486	1859	829	231	972	434	212	140	252	530	6	410
Arrive On Green	0.19	0.52	0.52	0.27	0.27	0.27	0.04	0.23	0.23	0.07	0.26	0.26
Sat Flow, veh/h	1781	3554	1585	500	3554	1585	1781	599	1078	1781	22	1566
Grp Volume(v), veh/h	473	1059	68	14	729	186	40	0	14	134	0	355
Grp Sat Flow(s),veh/h/ln	1781	1777	1585	500	1777	1585	1781	0	1676	1781	0	1588
Q Serve(g_s), s	14.0	15.4	1.6	1.6	14.3	7.4	1.3	0.0	0.5	4.3	0.0	16.2
Cycle Q Clear(g_c), s	14.0	15.4	1.6	1.6	14.3	7.4	1.3	0.0	0.5	4.3	0.0	16.2
Prop In Lane	1.00		1.00	1.00		1.00	1.00		0.64	1.00		0.99
Lane Grp Cap(c), veh/h	486	1859	829	231	972	434	212	0	392	530	0	416
V/C Ratio(X)	0.97	0.57	0.08	0.06	0.75	0.43	0.19	0.00	0.04	0.25	0.00	0.85
Avail Cap(c_a), veh/h	486	2194	979	278	1307	583	263	0	650	530	0	616
HCM Platoon Ratio	1.00	1.00	1.00	1.00	1.00	1.00	1.00	1.00	1.00	1.00	1.00	1.00
Upstream Filter(I)	1.00	1.00	1.00	1.00	1.00	1.00	1.00	0.00	1.00	1.00	0.00	1.00
Uniform Delay (d), s/veh	16.5	12.3	9.0	20.7	25.3	22.8	22.0	0.0	22.5	20.2	0.0	26.7
Incr Delay (d2), s/veh	33.7	0.3	0.0	0.1	1.7	0.7	0.4	0.0	0.0	0.2	0.0	7.6
Initial Q Delay(d3),s/veh	0.0	0.0	0.0	0.0	0.0	0.0	0.0	0.0	0.0	0.0	0.0	0.0
%ile BackOfQ(50%),veh/ln	9.6	5.5	0.5	0.2	6.0	2.7	0.5	0.0	0.2	1.8	0.0	6.7
Unsig. Movement Delay, s/veh												
LnGrp Delay(d),s/veh	50.2	12.6	9.1	20.8	27.0	23.4	22.4	0.0	22.6	20.4	0.0	34.3
LnGrp LOS	D	B	A	C	C	C	C	A	C	C	A	C
Approach Vol, veh/h		1600			929			54			489	
Approach Delay, s/veh		23.6			26.2			22.5			30.5	
Approach LOS		C			C			C			C	

Timer - Assigned Phs	1	2		4	5	6	7	8
Phs Duration (G+Y+Rc), s	9.5	22.3		44.3	7.4	24.5	19.0	25.3
Change Period (Y+Rc), s	4.5	4.5		4.5	4.5	4.5	4.5	4.5
Max Green Setting (Gmax), s	5.0	29.5		47.0	5.0	29.5	14.5	28.0
Max Q Clear Time (g_c+I1), s	6.3	2.5		17.4	3.3	18.2	16.0	16.3
Green Ext Time (p_c), s	0.0	0.0		9.4	0.0	1.8	0.0	4.6

Intersection Summary	
HCM 6th Ctrl Delay	25.4
HCM 6th LOS	C

Lane Group	EBL	EBT	EBR	WBL	WBT	WBR	NBL	NBT	NBR	SBL	SBT	SBR
Lane Group Flow (vph)	332	755	76	25	568	57	32	63	32	53	38	189
v/c Ratio	0.64	0.33	0.07	0.06	0.25	0.06	0.14	0.11	0.11	0.24	0.07	0.45
Control Delay	11.9	4.3	1.2	3.6	3.9	1.3	22.6	20.8	10.2	24.1	20.8	8.3
Queue Delay	0.0	0.0	0.0	0.0	0.0	0.0	0.0	0.0	0.0	0.0	0.0	0.0
Total Delay	11.9	4.3	1.2	3.6	3.9	1.3	22.6	20.8	10.2	24.1	20.8	8.3
Queue Length 50th (ft)	41	37	0	2	26	0	8	8	0	14	5	0
Queue Length 95th (ft)	133	72	10	9	53	8	31	24	20	45	17	46
Internal Link Dist (ft)		2061			2031			478			1056	
Turn Bay Length (ft)	325		275	275		275	250		275	250		275
Base Capacity (vph)	688	2977	1343	565	2977	1340	878	2281	1031	857	2281	1088
Starvation Cap Reductn	0	0	0	0	0	0	0	0	0	0	0	0
Spillback Cap Reductn	0	0	0	0	0	0	0	0	0	0	0	0
Storage Cap Reductn	0	0	0	0	0	0	0	0	0	0	0	0
Reduced v/c Ratio	0.48	0.25	0.06	0.04	0.19	0.04	0.04	0.03	0.03	0.06	0.02	0.17

Intersection Summary

Movement	EBL	EBT	EBR	WBL	WBT	WBR	NBL	NBT	NBR	SBL	SBT	SBR
Lane Configurations												
Traffic Volume (veh/h)	175	504	76	25	309	52	32	63	32	49	38	95
Future Volume (veh/h)	305	695	76	25	523	52	32	63	32	49	38	174
Initial Q (Qb), veh	0	0	0	0	0	0	0	0	0	0	0	0
Ped-Bike Adj(A_pbT)	1.00		1.00	1.00		1.00	1.00		1.00	1.00		1.00
Parking Bus, Adj	1.00	1.00	1.00	1.00	1.00	1.00	1.00	1.00	1.00	1.00	1.00	1.00
Work Zone On Approach		No			No			No			No	
Adj Sat Flow, veh/h/ln	1870	1870	1870	1870	1870	1870	1870	1870	1870	1870	1870	1870
Adj Flow Rate, veh/h	332	755	76	25	568	57	32	63	32	53	38	189
Peak Hour Factor	0.92	0.92	1.00	1.00	0.92	0.92	1.00	1.00	1.00	0.92	1.00	0.92
Percent Heavy Veh, %	2	2	2	2	2	2	2	2	2	2	2	2
Cap, veh/h	600	2212	986	504	2212	986	355	631	282	372	631	282
Arrive On Green	0.62	0.62	0.62	0.62	0.62	0.62	0.18	0.18	0.18	0.18	0.18	0.18
Sat Flow, veh/h	800	3554	1585	660	3554	1585	1154	3554	1585	1301	3554	1585
Grp Volume(v), veh/h	332	755	76	25	568	57	32	63	32	53	38	189
Grp Sat Flow(s),veh/h/ln	800	1777	1585	660	1777	1585	1154	1777	1585	1301	1777	1585
Q Serve(g_s), s	14.4	4.6	0.9	0.8	3.2	0.6	1.1	0.7	0.8	1.6	0.4	5.0
Cycle Q Clear(g_c), s	17.6	4.6	0.9	5.4	3.2	0.6	1.5	0.7	0.8	2.3	0.4	5.0
Prop In Lane	1.00		1.00	1.00		1.00	1.00		1.00	1.00		1.00
Lane Grp Cap(c), veh/h	600	2212	986	504	2212	986	355	631	282	372	631	282
V/C Ratio(X)	0.55	0.34	0.08	0.05	0.26	0.06	0.09	0.10	0.11	0.14	0.06	0.67
Avail Cap(c_a), veh/h	840	3277	1462	702	3277	1462	906	2329	1039	993	2329	1039
HCM Platoon Ratio	1.00	1.00	1.00	1.00	1.00	1.00	1.00	1.00	1.00	1.00	1.00	1.00
Upstream Filter(I)	1.00	1.00	1.00	1.00	1.00	1.00	1.00	1.00	1.00	1.00	1.00	1.00
Uniform Delay (d), s/veh	7.8	4.1	3.4	5.4	3.8	3.3	16.0	15.5	15.5	16.4	15.4	17.3
Incr Delay (d2), s/veh	0.8	0.1	0.0	0.0	0.1	0.0	0.1	0.1	0.2	0.2	0.0	2.8
Initial Q Delay(d3),s/veh	0.0	0.0	0.0	0.0	0.0	0.0	0.0	0.0	0.0	0.0	0.0	0.0
%ile BackOfQ(50%),veh/ln	1.7	0.9	0.2	0.1	0.6	0.1	0.3	0.2	0.3	0.4	0.1	1.8
Unsig. Movement Delay, s/veh												
LnGrp Delay(d),s/veh	8.6	4.2	3.4	5.4	3.9	3.4	16.1	15.6	15.7	16.6	15.4	20.0
LnGrp LOS	A	A	A	A	A	A	B	B	B	B	B	C
Approach Vol, veh/h		1163			650			127			280	
Approach Delay, s/veh		5.4			3.9			15.7			18.8	
Approach LOS		A			A			B			B	

Timer - Assigned Phs	2	4	6	8
Phs Duration (G+Y+Rc), s	12.5	32.5	12.5	32.5
Change Period (Y+Rc), s	4.5	4.5	4.5	4.5
Max Green Setting (Gmax), s	29.5	41.5	29.5	41.5
Max Q Clear Time (g_c+I1), s	3.5	19.6	7.0	7.4
Green Ext Time (p_c), s	0.5	8.4	1.0	4.8

Intersection Summary	
HCM 6th Ctrl Delay	7.2
HCM 6th LOS	A

Lane Group	EBL	EBT	EBR	WBL	WBT	WBR	NBL	NBT	NBR	SBL	SBT	SBR
Lane Group Flow (vph)	241	1093	82	50	737	38	188	6	19	9	6	152
v/c Ratio	0.66	0.56	0.09	0.23	0.38	0.04	0.54	0.01	0.05	0.03	0.01	0.30
Control Delay	20.6	8.6	2.2	9.8	7.0	2.7	22.6	13.8	5.6	14.1	13.8	5.1
Queue Delay	0.0	0.0	0.0	0.0	0.0	0.0	0.0	0.0	0.0	0.0	0.0	0.0
Total Delay	20.6	8.6	2.2	9.8	7.0	2.7	22.6	13.8	5.6	14.1	13.8	5.1
Queue Length 50th (ft)	39	85	0	6	50	0	49	1	0	2	1	0
Queue Length 95th (ft)	#165	170	15	28	103	10	98	8	10	10	8	32
Internal Link Dist (ft)		1938			2061			454			615	
Turn Bay Length (ft)	300		275	275		250	275		275	275		125
Base Capacity (vph)	431	2310	1061	254	2310	1046	668	886	767	668	886	832
Starvation Cap Reductn	0	0	0	0	0	0	0	0	0	0	0	0
Spillback Cap Reductn	0	0	0	0	0	0	0	0	0	0	0	0
Storage Cap Reductn	0	0	0	0	0	0	0	0	0	0	0	0
Reduced v/c Ratio	0.56	0.47	0.08	0.20	0.32	0.04	0.28	0.01	0.02	0.01	0.01	0.18

Intersection Summary

95th percentile volume exceeds capacity, queue may be longer.
Queue shown is maximum after two cycles.

Movement	EBL	EBT	EBR	WBL	WBT	WBR	NBL	NBT	NBR	SBL	SBT	SBR
Lane Configurations												
Traffic Volume (veh/h)	222	685	82	50	385	35	188	6	19	8	6	140
Future Volume (veh/h)	222	1006	82	50	678	35	188	6	19	8	6	140
Initial Q (Qb), veh	0	0	0	0	0	0	0	0	0	0	0	0
Ped-Bike Adj(A_pbT)	1.00		1.00	1.00		1.00	1.00		1.00	1.00		1.00
Parking Bus, Adj	1.00	1.00	1.00	1.00	1.00	1.00	1.00	1.00	1.00	1.00	1.00	1.00
Work Zone On Approach		No			No			No			No	
Adj Sat Flow, veh/h/ln	1870	1870	1870	1870	1870	1870	1870	1870	1870	1870	1870	1870
Adj Flow Rate, veh/h	241	1093	82	50	737	38	188	6	19	9	6	152
Peak Hour Factor	0.92	0.92	1.00	1.00	0.92	0.92	1.00	1.00	1.00	0.92	1.00	0.92
Percent Heavy Veh, %	2	2	2	2	2	2	2	2	2	2	2	2
Cap, veh/h	499	2089	932	359	2089	932	415	384	326	447	384	326
Arrive On Green	0.59	0.59	0.59	0.59	0.59	0.59	0.21	0.21	0.21	0.21	0.21	0.21
Sat Flow, veh/h	696	3554	1585	477	3554	1585	1228	1870	1585	1386	1870	1585
Grp Volume(v), veh/h	241	1093	82	50	737	38	188	6	19	9	6	152
Grp Sat Flow(s),veh/h/ln	696	1777	1585	477	1777	1585	1228	1870	1585	1386	1870	1585
Q Serve(g_s), s	12.0	8.0	1.0	3.0	4.7	0.4	6.3	0.1	0.4	0.2	0.1	3.7
Cycle Q Clear(g_c), s	16.7	8.0	1.0	11.0	4.7	0.4	6.4	0.1	0.4	0.3	0.1	3.7
Prop In Lane	1.00		1.00	1.00		1.00	1.00		1.00	1.00		1.00
Lane Grp Cap(c), veh/h	499	2089	932	359	2089	932	415	384	326	447	384	326
V/C Ratio(X)	0.48	0.52	0.09	0.14	0.35	0.04	0.45	0.02	0.06	0.02	0.02	0.47
Avail Cap(c_a), veh/h	561	2406	1073	401	2406	1073	768	923	782	846	923	782
HCM Platoon Ratio	1.00	1.00	1.00	1.00	1.00	1.00	1.00	1.00	1.00	1.00	1.00	1.00
Upstream Filter(I)	1.00	1.00	1.00	1.00	1.00	1.00	1.00	1.00	1.00	1.00	1.00	1.00
Uniform Delay (d), s/veh	9.0	5.3	3.9	8.6	4.7	3.8	16.3	13.8	13.9	13.9	13.8	15.2
Incr Delay (d2), s/veh	0.7	0.2	0.0	0.2	0.1	0.0	0.8	0.0	0.1	0.0	0.0	1.0
Initial Q Delay(d3),s/veh	0.0	0.0	0.0	0.0	0.0	0.0	0.0	0.0	0.0	0.0	0.0	0.0
%ile BackOfQ(50%),veh/ln	1.4	1.7	0.2	0.3	1.0	0.1	1.6	0.0	0.1	0.1	0.0	1.2
Unsig. Movement Delay, s/veh												
LnGrp Delay(d),s/veh	9.7	5.5	3.9	8.8	4.8	3.8	17.1	13.8	14.0	13.9	13.8	16.2
LnGrp LOS	A	A	A	A	A	A	B	B	B	B	B	B
Approach Vol, veh/h		1416			825			213			167	
Approach Delay, s/veh		6.2			5.0			16.7			16.0	
Approach LOS		A			A			B			B	

Timer - Assigned Phs		2		4		6		8				
Phs Duration (G+Y+Rc), s		13.5		30.1		13.5		30.1				
Change Period (Y+Rc), s		4.5		4.5		4.5		4.5				
Max Green Setting (Gmax), s		21.5		29.5		21.5		29.5				
Max Q Clear Time (g_c+I1), s		8.4		18.7		5.7		13.0				
Green Ext Time (p_c), s		0.6		6.9		0.4		5.4				

Intersection Summary	
HCM 6th Ctrl Delay	7.3
HCM 6th LOS	A

Lane Group	WBL	WBR	NBT	NBR	SBL	SBT
Lane Group Flow (vph)	1040	446	1805	1571	752	951
v/c Ratio	1.21	0.53	1.29	0.99	1.51	0.39
Control Delay	148.0	22.3	169.3	23.6	269.0	9.6
Queue Delay	0.0	0.0	0.0	0.0	0.0	0.0
Total Delay	148.0	22.3	169.3	23.6	269.0	9.6
Queue Length 50th (ft)	~551	234	~1017	0	~835	168
Queue Length 95th (ft)	#684	332	#1156	#245	#1080	206
Internal Link Dist (ft)	1938		1222			1449
Turn Bay Length (ft)	325			150	1000	
Base Capacity (vph)	858	847	1401	1583	499	2409
Starvation Cap Reductn	0	0	0	0	0	0
Spillback Cap Reductn	0	0	0	0	0	0
Storage Cap Reductn	0	0	0	0	0	0
Reduced v/c Ratio	1.21	0.53	1.29	0.99	1.51	0.39

Intersection Summary

~ Volume exceeds capacity, queue is theoretically infinite.
Queue shown is maximum after two cycles.

95th percentile volume exceeds capacity, queue may be longer.
Queue shown is maximum after two cycles.

Movement	WBL	WBR	NBT	NBR	SBL	SBT
Lane Configurations						
Traffic Volume (veh/h)	664	410	1375	1124	692	700
Future Volume (veh/h)	957	410	1661	1445	692	875
Initial Q (Qb), veh	0	0	0	0	0	0
Ped-Bike Adj(A_pbT)	1.00	1.00		1.00	1.00	
Parking Bus, Adj	1.00	1.00	1.00	1.00	1.00	1.00
Work Zone On Approach	No		No			No
Adj Sat Flow, veh/h/ln	1870	1870	1870	1870	1870	1870
Adj Flow Rate, veh/h	1040	446	1805	0	752	951
Peak Hour Factor	0.92	0.92	0.92	0.92	0.92	0.92
Percent Heavy Veh, %	2	2	2	2	2	2
Cap, veh/h	864	793	1408		501	2419
Arrive On Green	0.25	0.25	0.40	0.00	0.25	0.68
Sat Flow, veh/h	3456	1585	3647	1585	1781	3647
Grp Volume(v), veh/h	1040	446	1805	0	752	951
Grp Sat Flow(s),veh/h/ln	1728	1585	1777	1585	1781	1777
Q Serve(g_s), s	32.5	25.5	51.5	0.0	32.5	15.2
Cycle Q Clear(g_c), s	32.5	25.5	51.5	0.0	32.5	15.2
Prop In Lane	1.00	1.00		1.00	1.00	
Lane Grp Cap(c), veh/h	864	793	1408		501	2419
V/C Ratio(X)	1.20	0.56	1.28		1.50	0.39
Avail Cap(c_a), veh/h	864	793	1408		501	2419
HCM Platoon Ratio	1.00	1.00	1.00	1.00	1.00	1.00
Upstream Filter(I)	1.00	1.00	1.00	0.00	1.00	1.00
Uniform Delay (d), s/veh	48.8	22.6	39.3	0.0	42.1	9.0
Incr Delay (d2), s/veh	102.7	0.9	132.5	0.0	236.1	0.5
Initial Q Delay(d3),s/veh	0.0	0.0	0.0	0.0	0.0	0.0
%ile BackOfQ(50%),veh/ln	26.3	9.6	47.9	0.0	48.1	5.8
Unsig. Movement Delay, s/veh						
LnGrp Delay(d),s/veh	151.5	23.5	171.8	0.0	278.2	9.5
LnGrp LOS	F	C	F		F	A
Approach Vol, veh/h	1486		1805	A		1703
Approach Delay, s/veh	113.1		171.8			128.2
Approach LOS	F		F			F

Timer - Assigned Phs	1	2				6	8
Phs Duration (G+Y+Rc), s	37.0	56.0				93.0	37.0
Change Period (Y+Rc), s	4.5	4.5				4.5	4.5
Max Green Setting (Gmax), s	32.5	51.5				88.5	32.5
Max Q Clear Time (g_c+I1), s	34.5	53.5				17.2	34.5
Green Ext Time (p_c), s	0.0	0.0				8.9	0.0

Intersection Summary	
HCM 6th Ctrl Delay	139.4
HCM 6th LOS	F

Notes

Unsignalized Delay for [NBR] is excluded from calculations of the approach delay and intersection delay.

Intersection	
Int Delay, s/veh	4.4

Movement	EBT	EBR	WBL	WBT	NBL	NBR
Lane Configurations	↑↑	↱	↰	↑↑	↰	↱
Traffic Vol, veh/h	479	0	0	344	0	0
Future Vol, veh/h	808	158	35	557	120	24
Conflicting Peds, #/hr	0	0	0	0	0	0
Sign Control	Free	Free	Free	Free	Stop	Stop
RT Channelized	-	None	-	None	-	None
Storage Length	-	235	235	-	200	0
Veh in Median Storage, #	0	-	-	0	0	-
Grade, %	0	-	-	0	0	-
Peak Hour Factor	100	100	100	100	100	100
Heavy Vehicles, %	2	2	2	2	2	2
Mvmt Flow	808	158	35	557	120	24

Major/Minor	Major1		Major2		Minor1	
Conflicting Flow All	0	0	966	0	1157	404
Stage 1	-	-	-	-	808	-
Stage 2	-	-	-	-	349	-
Critical Hdwy	-	-	4.14	-	6.84	6.94
Critical Hdwy Stg 1	-	-	-	-	5.84	-
Critical Hdwy Stg 2	-	-	-	-	5.84	-
Follow-up Hdwy	-	-	2.22	-	3.52	3.32
Pot Cap-1 Maneuver	-	-	709	-	190	596
Stage 1	-	-	-	-	399	-
Stage 2	-	-	-	-	685	-
Platoon blocked, %	-	-		-		
Mov Cap-1 Maneuver	-	-	709	-	181	596
Mov Cap-2 Maneuver	-	-	-	-	181	-
Stage 1	-	-	-	-	399	-
Stage 2	-	-	-	-	651	-

Approach	EB	WB	NB
HCM Control Delay, s	0	0.6	49.6
HCM LOS			E

Minor Lane/Major Mvmt	NBLn1	NBLn2	EBT	EBR	WBL	WBT
Capacity (veh/h)	181	596	-	-	709	-
HCM Lane V/C Ratio	0.663	0.04	-	-	0.049	-
HCM Control Delay (s)	57.2	11.3	-	-	10.3	-
HCM Lane LOS	F	B	-	-	B	-
HCM 95th %tile Q(veh)	3.9	0.1	-	-	0.2	-

Intersection	
Int Delay, s/veh	6

Movement	EBT	EBR	WBL	WBT	NBL	NBR
Lane Configurations						
Traffic Vol, veh/h	479	0	0	344	0	0
Future Vol, veh/h	572	260	22	377	215	15
Conflicting Peds, #/hr	0	0	0	0	0	0
Sign Control	Free	Free	Free	Free	Stop	Stop
RT Channelized	-	None	-	None	-	None
Storage Length	-	235	235	-	0	0
Veh in Median Storage, #	0	-	-	0	0	-
Grade, %	0	-	-	0	0	-
Peak Hour Factor	100	100	100	100	100	100
Heavy Vehicles, %	2	2	2	2	2	2
Mvmt Flow	572	260	22	377	215	15

Major/Minor	Major1		Major2		Minor1	
Conflicting Flow All	0	0	832	0	805	286
Stage 1	-	-	-	-	572	-
Stage 2	-	-	-	-	233	-
Critical Hdwy	-	-	4.14	-	6.84	6.94
Critical Hdwy Stg 1	-	-	-	-	5.84	-
Critical Hdwy Stg 2	-	-	-	-	5.84	-
Follow-up Hdwy	-	-	2.22	-	3.52	3.32
Pot Cap-1 Maneuver	-	-	796	-	320	711
Stage 1	-	-	-	-	528	-
Stage 2	-	-	-	-	784	-
Platoon blocked, %	-	-		-		
Mov Cap-1 Maneuver	-	-	796	-	311	711
Mov Cap-2 Maneuver	-	-	-	-	311	-
Stage 1	-	-	-	-	528	-
Stage 2	-	-	-	-	762	-

Approach	EB	WB	NB
HCM Control Delay, s	0	0.5	37
HCM LOS			E

Minor Lane/Major Mvmt	NBLn1	NBLn2	EBT	EBR	WBL	WBT
Capacity (veh/h)	311	711	-	-	796	-
HCM Lane V/C Ratio	0.691	0.021	-	-	0.028	-
HCM Control Delay (s)	38.9	10.2	-	-	9.7	-
HCM Lane LOS	E	B	-	-	A	-
HCM 95th %tile Q(veh)	4.8	0.1	-	-	0.1	-

Intersection	
Int Delay, s/veh	4.3

Movement	EBL	EBT	EBR	WBL	WBT	WBR	NBL	NBT	NBR	SBL	SBT	SBR
Lane Configurations												
Traffic Vol, veh/h	0	0	0	0	0	0	0	0	0	0	0	0
Future Vol, veh/h	73	0	7	3	0	26	8	45	4	44	73	76
Conflicting Peds, #/hr	0	0	0	0	0	0	0	0	0	0	0	0
Sign Control	Stop	Stop	Stop	Stop	Stop	Stop	Free	Free	Free	Free	Free	Free
RT Channelized	-	-	None	-	-	None	-	-	None	-	-	None
Storage Length	-	-	-	-	-	-	-	-	-	-	-	-
Veh in Median Storage, #	-	0	-	-	0	-	-	0	-	-	0	-
Grade, %	-	0	-	-	0	-	-	0	-	-	0	-
Peak Hour Factor	100	100	100	100	100	100	100	100	100	100	100	100
Heavy Vehicles, %	2	2	2	2	2	2	2	2	2	2	2	2
Mvmt Flow	73	0	7	3	0	26	8	45	4	44	73	76

Major/Minor	Minor2			Minor1			Major1			Major2		
Conflicting Flow All	275	264	111	266	300	47	149	0	0	49	0	0
Stage 1	199	199	-	63	63	-	-	-	-	-	-	-
Stage 2	76	65	-	203	237	-	-	-	-	-	-	-
Critical Hdwy	7.12	6.52	6.22	7.12	6.52	6.22	4.12	-	-	4.12	-	-
Critical Hdwy Stg 1	6.12	5.52	-	6.12	5.52	-	-	-	-	-	-	-
Critical Hdwy Stg 2	6.12	5.52	-	6.12	5.52	-	-	-	-	-	-	-
Follow-up Hdwy	3.518	4.018	3.318	3.518	4.018	3.318	2.218	-	-	2.218	-	-
Pot Cap-1 Maneuver	677	641	942	687	612	1022	1432	-	-	1558	-	-
Stage 1	803	736	-	948	842	-	-	-	-	-	-	-
Stage 2	933	841	-	799	709	-	-	-	-	-	-	-
Platoon blocked, %								-	-		-	-
Mov Cap-1 Maneuver	641	617	942	663	589	1022	1432	-	-	1558	-	-
Mov Cap-2 Maneuver	641	617	-	663	589	-	-	-	-	-	-	-
Stage 1	798	713	-	942	837	-	-	-	-	-	-	-
Stage 2	904	836	-	768	687	-	-	-	-	-	-	-

Approach	EB	WB	NB	SB
HCM Control Delay, s	11.2	8.8	1.1	1.7
HCM LOS	B	A		

Minor Lane/Major Mvmt	NBL	NBT	NBR	EBLn1	WBLn1	SBL	SBT	SBR
Capacity (veh/h)	1432	-	-	659	968	1558	-	-
HCM Lane V/C Ratio	0.006	-	-	0.121	0.03	0.028	-	-
HCM Control Delay (s)	7.5	0	-	11.2	8.8	7.4	0	-
HCM Lane LOS	A	A	-	B	A	A	A	-
HCM 95th %tile Q(veh)	0	-	-	0.4	0.1	0.1	-	-

Intersection	
Int Delay, s/veh	6.9

Movement	EBL	EBT	EBR	WBL	WBT	WBR	NBL	NBT	NBR	SBL	SBT	SBR
Lane Configurations												
Traffic Vol, veh/h	0	0	0	0	0	0	0	0	0	0	0	0
Future Vol, veh/h	23	9	44	48	14	34	72	0	69	46	0	37
Conflicting Peds, #/hr	0	0	0	0	0	0	0	0	0	0	0	0
Sign Control	Stop	Stop	Stop	Stop	Stop	Stop	Free	Free	Free	Free	Free	Free
RT Channelized	-	-	None	-	-	None	-	-	None	-	-	None
Storage Length	-	-	-	-	-	-	-	-	-	-	-	-
Veh in Median Storage, #	-	0	-	-	0	-	-	0	-	-	0	-
Grade, %	-	0	-	-	0	-	-	0	-	-	0	-
Peak Hour Factor	100	100	100	100	100	100	100	100	100	100	100	100
Heavy Vehicles, %	2	2	2	2	2	2	2	2	2	2	2	2
Mvmt Flow	23	9	44	48	14	34	72	0	69	46	0	37

Major/Minor	Minor2			Minor1			Major1			Major2		
Conflicting Flow All	314	324	19	316	308	35	37	0	0	69	0	0
Stage 1	111	111	-	179	179	-	-	-	-	-	-	-
Stage 2	203	213	-	137	129	-	-	-	-	-	-	-
Critical Hdwy	7.12	6.52	6.22	7.12	6.52	6.22	4.12	-	-	4.12	-	-
Critical Hdwy Stg 1	6.12	5.52	-	6.12	5.52	-	-	-	-	-	-	-
Critical Hdwy Stg 2	6.12	5.52	-	6.12	5.52	-	-	-	-	-	-	-
Follow-up Hdwy	3.518	4.018	3.318	3.518	4.018	3.318	2.218	-	-	2.218	-	-
Pot Cap-1 Maneuver	639	594	1059	637	606	1038	1574	-	-	1532	-	-
Stage 1	894	804	-	823	751	-	-	-	-	-	-	-
Stage 2	799	726	-	866	789	-	-	-	-	-	-	-
Platoon blocked, %								-	-		-	-
Mov Cap-1 Maneuver	571	548	1059	567	559	1038	1574	-	-	1532	-	-
Mov Cap-2 Maneuver	571	548	-	567	559	-	-	-	-	-	-	-
Stage 1	851	779	-	783	715	-	-	-	-	-	-	-
Stage 2	721	691	-	795	765	-	-	-	-	-	-	-

Approach	EB	WB	NB	SB
HCM Control Delay, s	10.2	11.2	3.8	4.1
HCM LOS	B	B		

Minor Lane/Major Mvmt	NBL	NBT	NBR	EBLn1	WBLn1	SBL	SBT	SBR
Capacity (veh/h)	1574	-	-	774	674	1532	-	-
HCM Lane V/C Ratio	0.046	-	-	0.098	0.142	0.03	-	-
HCM Control Delay (s)	7.4	0	-	10.2	11.2	7.4	0	-
HCM Lane LOS	A	A	-	B	B	A	A	-
HCM 95th %tile Q(veh)	0.1	-	-	0.3	0.5	0.1	-	-

Intersection	
Int Delay, s/veh	2.5

Movement	EBL	EBT	WBT	WBR	SBL	SBR
Lane Configurations						
Traffic Vol, veh/h	0	0	0	0	0	0
Future Vol, veh/h	41	83	72	7	5	24
Conflicting Peds, #/hr	0	0	0	0	0	0
Sign Control	Free	Free	Free	Free	Stop	Stop
RT Channelized	-	None	-	None	-	None
Storage Length	-	-	-	-	-	-
Veh in Median Storage, #	-	0	0	-	0	-
Grade, %	-	0	0	-	0	-
Peak Hour Factor	100	100	100	100	100	100
Heavy Vehicles, %	2	2	2	2	2	2
Mvmt Flow	41	83	72	7	5	24

Major/Minor	Major1		Major2		Minor2	
Conflicting Flow All	79	0	-	0	241	76
Stage 1	-	-	-	-	76	-
Stage 2	-	-	-	-	165	-
Critical Hdwy	4.12	-	-	-	6.42	6.22
Critical Hdwy Stg 1	-	-	-	-	5.42	-
Critical Hdwy Stg 2	-	-	-	-	5.42	-
Follow-up Hdwy	2.218	-	-	-	3.518	3.318
Pot Cap-1 Maneuver	1519	-	-	-	747	985
Stage 1	-	-	-	-	947	-
Stage 2	-	-	-	-	864	-
Platoon blocked, %		-	-	-		
Mov Cap-1 Maneuver	1519	-	-	-	726	985
Mov Cap-2 Maneuver	-	-	-	-	726	-
Stage 1	-	-	-	-	920	-
Stage 2	-	-	-	-	864	-

Approach	EB	WB	SB
HCM Control Delay, s	2.5	0	9
HCM LOS			A

Minor Lane/Major Mvmt	EBL	EBT	WBT	WBR	SBLn1
Capacity (veh/h)	1519	-	-	-	928
HCM Lane V/C Ratio	0.027	-	-	-	0.031
HCM Control Delay (s)	7.4	0	-	-	9
HCM Lane LOS	A	A	-	-	A
HCM 95th %tile Q(veh)	0.1	-	-	-	0.1

Intersection	
Int Delay, s/veh	2.7

Movement	EBL	EBT	EBR	WBL	WBT	WBR	NBL	NBT	NBR	SBL	SBT	SBR
Lane Configurations												
Traffic Vol, veh/h	0	0	0	0	0	0	0	0	0	0	0	0
Future Vol, veh/h	21	33	18	26	61	7	0	0	0	2	1	14
Conflicting Peds, #/hr	0	0	0	0	0	0	0	0	0	0	0	0
Sign Control	Free	Free	Free	Free	Free	Free	Stop	Stop	Stop	Stop	Stop	Stop
RT Channelized	-	-	None	-	-	None	-	-	None	-	-	None
Storage Length	-	-	-	-	-	-	-	-	-	-	-	-
Veh in Median Storage, #	-	0	-	-	0	-	-	0	-	-	0	-
Grade, %	-	0	-	-	0	-	-	0	-	-	0	-
Peak Hour Factor	100	100	100	100	100	100	100	100	100	100	100	100
Heavy Vehicles, %	2	2	2	2	2	2	2	2	2	2	2	2
Mvmt Flow	21	33	18	26	61	7	0	0	0	2	1	14

Major/Minor	Major1			Major2			Minor1			Minor2		
Conflicting Flow All	68	0	0	51	0	0	208	204	42	201	210	65
Stage 1	-	-	-	-	-	-	84	84	-	117	117	-
Stage 2	-	-	-	-	-	-	124	120	-	84	93	-
Critical Hdwy	4.12	-	-	4.12	-	-	7.12	6.52	6.22	7.12	6.52	6.22
Critical Hdwy Stg 1	-	-	-	-	-	-	6.12	5.52	-	6.12	5.52	-
Critical Hdwy Stg 2	-	-	-	-	-	-	6.12	5.52	-	6.12	5.52	-
Follow-up Hdwy	2.218	-	-	2.218	-	-	3.518	4.018	3.318	3.518	4.018	3.318
Pot Cap-1 Maneuver	1533	-	-	1555	-	-	749	692	1029	757	687	999
Stage 1	-	-	-	-	-	-	924	825	-	888	799	-
Stage 2	-	-	-	-	-	-	880	796	-	924	818	-
Platoon blocked, %		-	-		-	-						
Mov Cap-1 Maneuver	1533	-	-	1555	-	-	721	671	1029	740	666	999
Mov Cap-2 Maneuver	-	-	-	-	-	-	721	671	-	740	666	-
Stage 1	-	-	-	-	-	-	911	813	-	876	785	-
Stage 2	-	-	-	-	-	-	852	782	-	911	807	-

Approach	EB	WB	NB	SB
HCM Control Delay, s	2.2	2	0	8.9
HCM LOS			A	A

Minor Lane/Major Mvmt	NBLn1	EBL	EBT	EBR	WBL	WBT	WBR	SBLn1
Capacity (veh/h)	-	1533	-	-	1555	-	-	933
HCM Lane V/C Ratio	-	0.014	-	-	0.017	-	-	0.018
HCM Control Delay (s)	0	7.4	0	-	7.4	0	-	8.9
HCM Lane LOS	A	A	A	-	A	A	-	A
HCM 95th %tile Q(veh)	-	0	-	-	0.1	-	-	0.1

Intersection	
Int Delay, s/veh	7.4

Movement	EBL	EBT	EBR	WBL	WBT	WBR	NBL	NBT	NBR	SBL	SBT	SBR
Lane Configurations												
Traffic Vol, veh/h	0	0	0	0	0	0	0	0	0	0	0	0
Future Vol, veh/h	5	4	26	42	23	3	66	20	56	2	12	5
Conflicting Peds, #/hr	0	0	0	0	0	0	0	0	0	0	0	0
Sign Control	Free	Free	Free	Free	Free	Free	Stop	Stop	Stop	Stop	Stop	Stop
RT Channelized	-	-	None	-	-	None	-	-	None	-	-	None
Storage Length	-	-	-	-	-	-	-	-	-	-	-	-
Veh in Median Storage, #	-	0	-	-	0	-	-	0	-	-	0	-
Grade, %	-	0	-	-	0	-	-	0	-	-	0	-
Peak Hour Factor	100	100	100	100	100	100	100	100	100	100	100	100
Heavy Vehicles, %	2	2	2	2	2	2	2	2	2	2	2	2
Mvmt Flow	5	4	26	42	23	3	66	20	56	2	12	5

Major/Minor	Major1			Major2			Minor1			Minor2		
Conflicting Flow All	26	0	0	30	0	0	144	137	17	174	149	25
Stage 1	-	-	-	-	-	-	27	27	-	109	109	-
Stage 2	-	-	-	-	-	-	117	110	-	65	40	-
Critical Hdwy	4.12	-	-	4.12	-	-	7.12	6.52	6.22	7.12	6.52	6.22
Critical Hdwy Stg 1	-	-	-	-	-	-	6.12	5.52	-	6.12	5.52	-
Critical Hdwy Stg 2	-	-	-	-	-	-	6.12	5.52	-	6.12	5.52	-
Follow-up Hdwy	2.218	-	-	2.218	-	-	3.518	4.018	3.318	3.518	4.018	3.318
Pot Cap-1 Maneuver	1588	-	-	1583	-	-	825	754	1062	789	743	1051
Stage 1	-	-	-	-	-	-	990	873	-	896	805	-
Stage 2	-	-	-	-	-	-	888	804	-	946	862	-
Platoon blocked, %		-	-		-	-						
Mov Cap-1 Maneuver	1588	-	-	1583	-	-	792	731	1062	715	721	1051
Mov Cap-2 Maneuver	-	-	-	-	-	-	792	731	-	715	721	-
Stage 1	-	-	-	-	-	-	987	870	-	893	783	-
Stage 2	-	-	-	-	-	-	847	782	-	873	859	-

Approach	EB	WB	NB	SB
HCM Control Delay, s	1	4.5	10	9.7
HCM LOS			B	A

Minor Lane/Major Mvmt	NBLn1	EBL	EBT	EBR	WBL	WBT	WBR	SBLn1
Capacity (veh/h)	869	1588	-	-	1583	-	-	785
HCM Lane V/C Ratio	0.163	0.003	-	-	0.027	-	-	0.024
HCM Control Delay (s)	10	7.3	0	-	7.3	0	-	9.7
HCM Lane LOS	B	A	A	-	A	A	-	A
HCM 95th %tile Q(veh)	0.6	0	-	-	0.1	-	-	0.1

Intersection	
Int Delay, s/veh	3.3

Movement	EBL	EBT	EBR	WBL	WBT	WBR	NBL	NBT	NBR	SBL	SBT	SBR
Lane Configurations												
Traffic Vol, veh/h	0	0	0	0	0	0	0	0	0	0	0	0
Future Vol, veh/h	45	2	13	16	0	8	0	89	26	13	67	0
Conflicting Peds, #/hr	0	0	0	0	0	0	0	0	0	0	0	0
Sign Control	Stop	Stop	Stop	Stop	Stop	Stop	Free	Free	Free	Free	Free	Free
RT Channelized	-	-	None	-	-	None	-	-	None	-	-	None
Storage Length	-	-	-	-	-	-	-	-	-	-	-	-
Veh in Median Storage, #	-	0	-	-	0	-	-	0	-	-	0	-
Grade, %	-	0	-	-	0	-	-	0	-	-	0	-
Peak Hour Factor	100	100	100	100	100	100	100	100	100	100	100	100
Heavy Vehicles, %	2	2	2	2	2	2	2	2	2	2	2	2
Mvmt Flow	45	2	13	16	0	8	0	89	26	13	67	0

Major/Minor	Minor2			Minor1			Major1			Major2		
Conflicting Flow All	199	208	67	203	195	102	67	0	0	115	0	0
Stage 1	93	93	-	102	102	-	-	-	-	-	-	-
Stage 2	106	115	-	101	93	-	-	-	-	-	-	-
Critical Hdwy	7.12	6.52	6.22	7.12	6.52	6.22	4.12	-	-	4.12	-	-
Critical Hdwy Stg 1	6.12	5.52	-	6.12	5.52	-	-	-	-	-	-	-
Critical Hdwy Stg 2	6.12	5.52	-	6.12	5.52	-	-	-	-	-	-	-
Follow-up Hdwy	3.518	4.018	3.318	3.518	4.018	3.318	2.218	-	-	2.218	-	-
Pot Cap-1 Maneuver	760	689	997	755	700	953	1535	-	-	1474	-	-
Stage 1	914	818	-	904	811	-	-	-	-	-	-	-
Stage 2	900	800	-	905	818	-	-	-	-	-	-	-
Platoon blocked, %								-	-		-	-
Mov Cap-1 Maneuver	749	683	997	738	694	953	1535	-	-	1474	-	-
Mov Cap-2 Maneuver	749	683	-	738	694	-	-	-	-	-	-	-
Stage 1	914	811	-	904	811	-	-	-	-	-	-	-
Stage 2	892	800	-	883	811	-	-	-	-	-	-	-

Approach	EB	WB	NB	SB
HCM Control Delay, s	9.9	9.7	0	1.2
HCM LOS	A	A		

Minor Lane/Major Mvmt	NBL	NBT	NBR	EBLn1	WBLn1	SBL	SBT	SBR
Capacity (veh/h)	1535	-	-	789	798	1474	-	-
HCM Lane V/C Ratio	-	-	-	0.076	0.03	0.009	-	-
HCM Control Delay (s)	0	-	-	9.9	9.7	7.5	0	-
HCM Lane LOS	A	-	-	A	A	A	A	-
HCM 95th %tile Q(veh)	0	-	-	0.2	0.1	0	-	-

Intersection	
Int Delay, s/veh	3.2

Movement	EBL	EBT	EBR	WBL	WBT	WBR	NBL	NBT	NBR	SBL	SBT	SBR
Lane Configurations												
Traffic Vol, veh/h	0	0	0	0	0	0	0	0	0	0	0	0
Future Vol, veh/h	15	23	24	15	46	16	16	0	6	9	0	6
Conflicting Peds, #/hr	0	0	0	0	0	0	0	0	0	0	0	0
Sign Control	Free	Free	Free	Free	Free	Free	Stop	Stop	Stop	Stop	Stop	Stop
RT Channelized	-	-	None	-	-	None	-	-	None	-	-	None
Storage Length	-	-	-	-	-	-	-	-	-	-	-	-
Veh in Median Storage, #	-	0	-	-	0	-	-	0	-	-	0	-
Grade, %	-	0	-	-	0	-	-	0	-	-	0	-
Peak Hour Factor	100	100	100	100	100	100	100	100	100	100	100	100
Heavy Vehicles, %	2	2	2	2	2	2	2	2	2	2	2	2
Mvmt Flow	15	23	24	15	46	16	16	0	6	9	0	6

Major/Minor	Major1			Major2			Minor1			Minor2		
Conflicting Flow All	62	0	0	47	0	0	152	157	35	152	161	54
Stage 1	-	-	-	-	-	-	65	65	-	84	84	-
Stage 2	-	-	-	-	-	-	87	92	-	68	77	-
Critical Hdwy	4.12	-	-	4.12	-	-	7.12	6.52	6.22	7.12	6.52	6.22
Critical Hdwy Stg 1	-	-	-	-	-	-	6.12	5.52	-	6.12	5.52	-
Critical Hdwy Stg 2	-	-	-	-	-	-	6.12	5.52	-	6.12	5.52	-
Follow-up Hdwy	2.218	-	-	2.218	-	-	3.518	4.018	3.318	3.518	4.018	3.318
Pot Cap-1 Maneuver	1541	-	-	1560	-	-	815	735	1038	815	731	1013
Stage 1	-	-	-	-	-	-	946	841	-	924	825	-
Stage 2	-	-	-	-	-	-	921	819	-	942	831	-
Platoon blocked, %		-	-		-	-						
Mov Cap-1 Maneuver	1541	-	-	1560	-	-	798	720	1038	798	716	1013
Mov Cap-2 Maneuver	-	-	-	-	-	-	798	720	-	798	716	-
Stage 1	-	-	-	-	-	-	937	833	-	915	817	-
Stage 2	-	-	-	-	-	-	906	811	-	927	823	-

Approach	EB	WB	NB	SB
HCM Control Delay, s	1.8	1.4	9.3	9.2
HCM LOS			A	A

Minor Lane/Major Mvmt	NBLn1	EBL	EBT	EBR	WBL	WBT	WBR	SBLn1
Capacity (veh/h)	852	1541	-	-	1560	-	-	872
HCM Lane V/C Ratio	0.026	0.01	-	-	0.01	-	-	0.017
HCM Control Delay (s)	9.3	7.4	0	-	7.3	0	-	9.2
HCM Lane LOS	A	A	A	-	A	A	-	A
HCM 95th %tile Q(veh)	0.1	0	-	-	0	-	-	0.1

Intersection	
Int Delay, s/veh	3.3

Movement	EBL	EBT	EBR	WBL	WBT	WBR	NBL	NBT	NBR	SBL	SBT	SBR
Lane Configurations												
Traffic Vol, veh/h	0	0	0	0	0	0	0	0	0	0	0	0
Future Vol, veh/h	2	34	2	37	56	22	15	0	9	6	0	6
Conflicting Peds, #/hr	0	0	0	0	0	0	0	0	0	0	0	0
Sign Control	Free	Free	Free	Free	Free	Free	Stop	Stop	Stop	Stop	Stop	Stop
RT Channelized	-	-	None	-	-	None	-	-	None	-	-	None
Storage Length	-	-	-	-	-	-	-	-	-	-	-	-
Veh in Median Storage, #	-	0	-	-	0	-	-	0	-	-	0	-
Grade, %	-	0	-	-	0	-	-	0	-	-	0	-
Peak Hour Factor	100	100	100	100	100	100	100	100	100	100	100	100
Heavy Vehicles, %	2	2	2	2	2	2	2	2	2	2	2	2
Mvmt Flow	2	34	2	37	56	22	15	0	9	6	0	6

Major/Minor	Major1			Major2			Minor1			Minor2		
Conflicting Flow All	78	0	0	36	0	0	183	191	35	185	181	67
Stage 1	-	-	-	-	-	-	39	39	-	141	141	-
Stage 2	-	-	-	-	-	-	144	152	-	44	40	-
Critical Hdwy	4.12	-	-	4.12	-	-	7.12	6.52	6.22	7.12	6.52	6.22
Critical Hdwy Stg 1	-	-	-	-	-	-	6.12	5.52	-	6.12	5.52	-
Critical Hdwy Stg 2	-	-	-	-	-	-	6.12	5.52	-	6.12	5.52	-
Follow-up Hdwy	2.218	-	-	2.218	-	-	3.518	4.018	3.318	3.518	4.018	3.318
Pot Cap-1 Maneuver	1520	-	-	1575	-	-	778	704	1038	776	713	997
Stage 1	-	-	-	-	-	-	976	862	-	862	780	-
Stage 2	-	-	-	-	-	-	859	772	-	970	862	-
Platoon blocked, %		-	-		-	-						
Mov Cap-1 Maneuver	1520	-	-	1575	-	-	758	686	1038	754	694	997
Mov Cap-2 Maneuver	-	-	-	-	-	-	758	686	-	754	694	-
Stage 1	-	-	-	-	-	-	975	861	-	861	761	-
Stage 2	-	-	-	-	-	-	832	753	-	961	861	-

Approach	EB	WB	NB	SB
HCM Control Delay, s	0.4	2.4	9.4	9.3
HCM LOS			A	A

Minor Lane/Major Mvmt	NBLn1	EBL	EBT	EBR	WBL	WBT	WBR	SBLn1
Capacity (veh/h)	843	1520	-	-	1575	-	-	859
HCM Lane V/C Ratio	0.028	0.001	-	-	0.023	-	-	0.014
HCM Control Delay (s)	9.4	7.4	0	-	7.3	0	-	9.3
HCM Lane LOS	A	A	A	-	A	A	-	A
HCM 95th %tile Q(veh)	0.1	0	-	-	0.1	-	-	0

Intersection	
Int Delay, s/veh	2.9

Movement	EBL	EBT	EBR	WBL	WBT	WBR	NBL	NBT	NBR	SBL	SBT	SBR
Lane Configurations												
Traffic Vol, veh/h	0	0	0	0	0	0	0	0	0	0	0	0
Future Vol, veh/h	52	0	5	5	0	34	5	144	7	53	179	50
Conflicting Peds, #/hr	0	0	0	0	0	0	0	0	0	0	0	0
Sign Control	Stop	Stop	Stop	Stop	Stop	Stop	Free	Free	Free	Free	Free	Free
RT Channelized	-	-	None	-	-	None	-	-	None	-	-	None
Storage Length	-	-	-	-	-	-	-	-	-	-	-	-
Veh in Median Storage, #	-	0	-	-	0	-	-	0	-	-	0	-
Grade, %	-	0	-	-	0	-	-	0	-	-	0	-
Peak Hour Factor	100	100	100	100	100	100	100	100	100	100	100	100
Heavy Vehicles, %	2	2	2	2	2	2	2	2	2	2	2	2
Mvmt Flow	52	0	5	5	0	34	5	144	7	53	179	50

Major/Minor	Minor2			Minor1			Major1			Major2		
Conflicting Flow All	392	471	115	354	493	76	229	0	0	151	0	0
Stage 1	310	310	-	158	158	-	-	-	-	-	-	-
Stage 2	82	161	-	196	335	-	-	-	-	-	-	-
Critical Hdwy	7.54	6.54	6.94	7.54	6.54	6.94	4.14	-	-	4.14	-	-
Critical Hdwy Stg 1	6.54	5.54	-	6.54	5.54	-	-	-	-	-	-	-
Critical Hdwy Stg 2	6.54	5.54	-	6.54	5.54	-	-	-	-	-	-	-
Follow-up Hdwy	3.52	4.02	3.32	3.52	4.02	3.32	2.22	-	-	2.22	-	-
Pot Cap-1 Maneuver	542	489	916	576	476	970	1336	-	-	1428	-	-
Stage 1	675	658	-	828	766	-	-	-	-	-	-	-
Stage 2	917	764	-	787	641	-	-	-	-	-	-	-
Platoon blocked, %								-	-		-	-
Mov Cap-1 Maneuver	504	466	916	552	454	970	1336	-	-	1428	-	-
Mov Cap-2 Maneuver	504	466	-	552	454	-	-	-	-	-	-	-
Stage 1	672	630	-	825	763	-	-	-	-	-	-	-
Stage 2	881	761	-	749	613	-	-	-	-	-	-	-

Approach	EB	WB	NB	SB
HCM Control Delay, s	12.7	9.3	0.2	1.5
HCM LOS	B	A		

Minor Lane/Major Mvmt	NBL	NBT	NBR	EBLn1	WBLn1	SBL	SBT	SBR
Capacity (veh/h)	1336	-	-	525	884	1428	-	-
HCM Lane V/C Ratio	0.004	-	-	0.109	0.044	0.037	-	-
HCM Control Delay (s)	7.7	0	-	12.7	9.3	7.6	0.1	-
HCM Lane LOS	A	A	-	B	A	A	A	-
HCM 95th %tile Q(veh)	0	-	-	0.4	0.1	0.1	-	-

Intersection	
Int Delay, s/veh	3.3

Movement	EBL	EBT	EBR	WBL	WBT	WBR	NBL	NBT	NBR	SBL	SBT	SBR
Lane Configurations												
Traffic Vol, veh/h	0	0	0	0	0	0	0	0	0	0	0	0
Future Vol, veh/h	52	0	8	4	0	24	7	80	6	37	78	74
Conflicting Peds, #/hr	0	0	0	0	0	0	0	0	0	0	0	0
Sign Control	Stop	Stop	Stop	Stop	Stop	Stop	Free	Free	Free	Free	Free	Free
RT Channelized	-	-	None	-	-	None	-	-	None	-	-	None
Storage Length	-	-	-	-	-	-	-	-	-	-	-	-
Veh in Median Storage, #	-	0	-	-	0	-	-	0	-	-	0	-
Grade, %	-	0	-	-	0	-	-	0	-	-	0	-
Peak Hour Factor	100	100	100	100	100	100	100	100	100	100	100	100
Heavy Vehicles, %	2	2	2	2	2	2	2	2	2	2	2	2
Mvmt Flow	52	0	8	4	0	24	7	80	6	37	78	74

Major/Minor	Minor2			Minor1			Major1			Major2		
Conflicting Flow All	243	289	76	210	323	43	152	0	0	86	0	0
Stage 1	189	189	-	97	97	-	-	-	-	-	-	-
Stage 2	54	100	-	113	226	-	-	-	-	-	-	-
Critical Hdwy	7.54	6.54	6.94	7.54	6.54	6.94	4.14	-	-	4.14	-	-
Critical Hdwy Stg 1	6.54	5.54	-	6.54	5.54	-	-	-	-	-	-	-
Critical Hdwy Stg 2	6.54	5.54	-	6.54	5.54	-	-	-	-	-	-	-
Follow-up Hdwy	3.52	4.02	3.32	3.52	4.02	3.32	2.22	-	-	2.22	-	-
Pot Cap-1 Maneuver	691	620	970	729	593	1018	1426	-	-	1508	-	-
Stage 1	795	743	-	899	814	-	-	-	-	-	-	-
Stage 2	952	811	-	880	716	-	-	-	-	-	-	-
Platoon blocked, %								-	-		-	-
Mov Cap-1 Maneuver	659	600	970	706	574	1018	1426	-	-	1508	-	-
Mov Cap-2 Maneuver	659	600	-	706	574	-	-	-	-	-	-	-
Stage 1	791	723	-	895	810	-	-	-	-	-	-	-
Stage 2	925	807	-	849	697	-	-	-	-	-	-	-

Approach	EB	WB	NB	SB
HCM Control Delay, s	10.7	8.9	0.6	1.5
HCM LOS	B	A		

Minor Lane/Major Mvmt	NBL	NBT	NBR	EBLn1	WBLn1	SBL	SBT	SBR
Capacity (veh/h)	1426	-	-	688	958	1508	-	-
HCM Lane V/C Ratio	0.005	-	-	0.087	0.029	0.025	-	-
HCM Control Delay (s)	7.5	0	-	10.7	8.9	7.4	0.1	-
HCM Lane LOS	A	A	-	B	A	A	A	-
HCM 95th %tile Q(veh)	0	-	-	0.3	0.1	0.1	-	-

Intersection	
Intersection Delay, s/veh	3.4
Intersection LOS	A

Approach	EB	WB	NB	SB
Entry Lanes	1	1	2	2
Conflicting Circle Lanes	1	1	1	1
Adj Approach Flow, veh/h	49	76	196	90
Demand Flow Rate, veh/h	50	78	201	93
Vehicles Circulating, veh/h	94	136	54	119
Vehicles Exiting, veh/h	118	119	90	95
Ped Vol Crossing Leg, #/h	0	0	0	0
Ped Cap Adj	1.000	1.000	1.000	1.000
Approach Delay, s/veh	3.3	3.6	3.3	3.2
Approach LOS	A	A	A	A

Lane	Left	Left	Left	Right	Left	Right
Designated Moves	LTR	LTR	LT	R	LT	R
Assumed Moves	LTR	LTR	LT	R	LT	R
RT Channelized						
Lane Util	1.000	1.000	0.577	0.423	0.667	0.333
Follow-Up Headway, s	2.609	2.609	2.535	2.535	2.535	2.535
Critical Headway, s	4.976	4.976	4.544	4.544	4.544	4.544
Entry Flow, veh/h	50	78	116	85	62	31
Cap Entry Lane, veh/h	1254	1201	1352	1352	1274	1274
Entry HV Adj Factor	0.980	0.974	0.978	0.976	0.975	0.968
Flow Entry, veh/h	49	76	113	83	60	30
Cap Entry, veh/h	1229	1170	1322	1320	1243	1233
V/C Ratio	0.040	0.065	0.086	0.063	0.049	0.024
Control Delay, s/veh	3.3	3.6	3.4	3.2	3.3	3.1
LOS	A	A	A	A	A	A
95th %tile Queue, veh	0	0	0	0	0	0

Intersection	
Int Delay, s/veh	1.6

Movement	EBT	EBR	WBL	WBT	NBL	NBR
Lane Configurations						
Traffic Vol, veh/h	0	0	0	0	0	0
Future Vol, veh/h	76	11	27	186	10	27
Conflicting Peds, #/hr	0	0	0	0	0	0
Sign Control	Free	Free	Free	Free	Stop	Stop
RT Channelized	-	None	-	None	-	None
Storage Length	-	-	150	-	-	150
Veh in Median Storage, #	0	-	-	0	0	-
Grade, %	0	-	-	0	0	-
Peak Hour Factor	100	100	100	100	100	100
Heavy Vehicles, %	2	2	2	2	2	2
Mvmt Flow	76	11	27	186	10	27

Major/Minor	Major1		Major2		Minor1	
Conflicting Flow All	0	0	87	0	229	44
Stage 1	-	-	-	-	82	-
Stage 2	-	-	-	-	147	-
Critical Hdwy	-	-	4.14	-	6.84	6.94
Critical Hdwy Stg 1	-	-	-	-	5.84	-
Critical Hdwy Stg 2	-	-	-	-	5.84	-
Follow-up Hdwy	-	-	2.22	-	3.52	3.32
Pot Cap-1 Maneuver	-	-	1507	-	739	1017
Stage 1	-	-	-	-	932	-
Stage 2	-	-	-	-	865	-
Platoon blocked, %	-	-		-		
Mov Cap-1 Maneuver	-	-	1507	-	726	1017
Mov Cap-2 Maneuver	-	-	-	-	726	-
Stage 1	-	-	-	-	932	-
Stage 2	-	-	-	-	849	-

Approach	EB	WB	NB
HCM Control Delay, s	0	0.9	9
HCM LOS			A

Minor Lane/Major Mvmt	NBLn1	NBLn2	EBT	EBR	WBL	WBT
Capacity (veh/h)	726	1017	-	-	1507	-
HCM Lane V/C Ratio	0.014	0.027	-	-	0.018	-
HCM Control Delay (s)	10	8.6	-	-	7.4	-
HCM Lane LOS	B	A	-	-	A	-
HCM 95th %tile Q(veh)	0	0.1	-	-	0.1	-

Intersection	
Int Delay, s/veh	7.1

Movement	WBL	WBR	NBT	NBR	SBL	SBT
Lane Configurations						
Traffic Vol, veh/h	0	0	0	0	0	0
Future Vol, veh/h	0	34	3	0	34	4
Conflicting Peds, #/hr	0	0	0	0	0	0
Sign Control	Stop	Stop	Free	Free	Free	Free
RT Channelized	-	None	-	None	-	None
Storage Length	-	-	-	-	-	-
Veh in Median Storage, #	0	-	0	-	-	0
Grade, %	0	-	0	-	-	0
Peak Hour Factor	100	100	100	100	100	100
Heavy Vehicles, %	2	2	2	2	2	2
Mvmt Flow	0	34	3	0	34	4

Major/Minor	Minor1		Major1		Major2	
Conflicting Flow All	75	3	0	0	3	0
Stage 1	3	-	-	-	-	-
Stage 2	72	-	-	-	-	-
Critical Hdwy	6.42	6.22	-	-	4.12	-
Critical Hdwy Stg 1	5.42	-	-	-	-	-
Critical Hdwy Stg 2	5.42	-	-	-	-	-
Follow-up Hdwy	3.518	3.318	-	-	2.218	-
Pot Cap-1 Maneuver	928	1081	-	-	1619	-
Stage 1	1020	-	-	-	-	-
Stage 2	951	-	-	-	-	-
Platoon blocked, %			-	-		-
Mov Cap-1 Maneuver	909	1081	-	-	1619	-
Mov Cap-2 Maneuver	909	-	-	-	-	-
Stage 1	1020	-	-	-	-	-
Stage 2	931	-	-	-	-	-

Approach	WB	NB	SB
HCM Control Delay, s	8.4	0	6.5
HCM LOS	A		

Minor Lane/Major Mvmt	NBT	NBR	WBLn1	SBL	SBT
Capacity (veh/h)	-	-	1081	1619	-
HCM Lane V/C Ratio	-	-	0.031	0.021	-
HCM Control Delay (s)	-	-	8.4	7.3	0
HCM Lane LOS	-	-	A	A	A
HCM 95th %tile Q(veh)	-	-	0.1	0.1	-

Intersection	
Int Delay, s/veh	1.1

Movement	EBL	EBR	NBL	NBT	SBT	SBR
Lane Configurations						
Traffic Vol, veh/h	0	0	0	847	782	0
Future Vol, veh/h	0	150	0	894	816	93
Conflicting Peds, #/hr	0	0	0	0	0	0
Sign Control	Stop	Stop	Free	Free	Free	Free
RT Channelized	-	None	-	None	-	None
Storage Length	-	0	-	-	-	-
Veh in Median Storage, #	0	-	-	0	0	-
Grade, %	0	-	-	0	0	-
Peak Hour Factor	100	100	100	100	100	100
Heavy Vehicles, %	2	2	2	2	2	2
Mvmt Flow	0	150	0	894	816	93

Major/Minor	Minor2		Major1		Major2	
Conflicting Flow All	-	455	-	0	-	0
Stage 1	-	-	-	-	-	-
Stage 2	-	-	-	-	-	-
Critical Hdwy	-	6.94	-	-	-	-
Critical Hdwy Stg 1	-	-	-	-	-	-
Critical Hdwy Stg 2	-	-	-	-	-	-
Follow-up Hdwy	-	3.32	-	-	-	-
Pot Cap-1 Maneuver	0	552	0	-	-	-
Stage 1	0	-	0	-	-	-
Stage 2	0	-	0	-	-	-
Platoon blocked, %				-	-	-
Mov Cap-1 Maneuver	-	552	-	-	-	-
Mov Cap-2 Maneuver	-	-	-	-	-	-
Stage 1	-	-	-	-	-	-
Stage 2	-	-	-	-	-	-

Approach	EB	NB	SB
HCM Control Delay, s	13.9	0	0
HCM LOS	B		

Minor Lane/Major Mvmt	NBT	EBLn1	SBT	SBR
Capacity (veh/h)	-	552	-	-
HCM Lane V/C Ratio	-	0.272	-	-
HCM Control Delay (s)	-	13.9	-	-
HCM Lane LOS	-	B	-	-
HCM 95th %tile Q(veh)	-	1.1	-	-

Intersection	
Int Delay, s/veh	1

Movement	EBT	EBR	WBL	WBT	NBL	NBR
Lane Configurations						
Traffic Vol, veh/h	0	0	0	0	0	0
Future Vol, veh/h	69	19	7	68	11	3
Conflicting Peds, #/hr	0	0	0	0	0	0
Sign Control	Free	Free	Free	Free	Stop	Stop
RT Channelized	-	None	-	None	-	None
Storage Length	-	-	-	-	0	-
Veh in Median Storage, #	0	-	-	0	0	-
Grade, %	0	-	-	0	0	-
Peak Hour Factor	100	100	100	100	100	100
Heavy Vehicles, %	2	2	2	2	2	2
Mvmt Flow	69	19	7	68	11	3

Major/Minor	Major1		Major2		Minor1	
Conflicting Flow All	0	0	88	0	161	79
Stage 1	-	-	-	-	79	-
Stage 2	-	-	-	-	82	-
Critical Hdwy	-	-	4.12	-	6.42	6.22
Critical Hdwy Stg 1	-	-	-	-	5.42	-
Critical Hdwy Stg 2	-	-	-	-	5.42	-
Follow-up Hdwy	-	-	2.218	-	3.518	3.318
Pot Cap-1 Maneuver	-	-	1508	-	830	981
Stage 1	-	-	-	-	944	-
Stage 2	-	-	-	-	941	-
Platoon blocked, %	-	-		-		
Mov Cap-1 Maneuver	-	-	1508	-	826	981
Mov Cap-2 Maneuver	-	-	-	-	826	-
Stage 1	-	-	-	-	944	-
Stage 2	-	-	-	-	936	-

Approach	EB	WB	NB
HCM Control Delay, s	0	0.7	9.3
HCM LOS			A

Minor Lane/Major Mvmt	NBLn1	EBT	EBR	WBL	WBT
Capacity (veh/h)	855	-	-	1508	-
HCM Lane V/C Ratio	0.016	-	-	0.005	-
HCM Control Delay (s)	9.3	-	-	7.4	0
HCM Lane LOS	A	-	-	A	A
HCM 95th %tile Q(veh)	0.1	-	-	0	-

Intersection	
Int Delay, s/veh	0.5

Movement	EBL	EBR	NBL	NBT	SBT	SBR
Lane Configurations						
Traffic Vol, veh/h	0	0	0	0	0	0
Future Vol, veh/h	11	0	0	130	79	13
Conflicting Peds, #/hr	0	0	0	0	0	0
Sign Control	Stop	Stop	Free	Free	Free	Free
RT Channelized	-	None	-	None	-	None
Storage Length	0	-	0	-	-	-
Veh in Median Storage, #	0	-	-	0	0	-
Grade, %	0	-	-	0	0	-
Peak Hour Factor	100	100	100	100	100	100
Heavy Vehicles, %	2	2	2	2	2	2
Mvmt Flow	11	0	0	130	79	13

Major/Minor	Minor2		Major1		Major2	
Conflicting Flow All	216	86	92	0	-	0
Stage 1	86	-	-	-	-	-
Stage 2	130	-	-	-	-	-
Critical Hdwy	6.42	6.22	4.12	-	-	-
Critical Hdwy Stg 1	5.42	-	-	-	-	-
Critical Hdwy Stg 2	5.42	-	-	-	-	-
Follow-up Hdwy	3.518	3.318	2.218	-	-	-
Pot Cap-1 Maneuver	772	973	1503	-	-	-
Stage 1	937	-	-	-	-	-
Stage 2	896	-	-	-	-	-
Platoon blocked, %				-	-	-
Mov Cap-1 Maneuver	772	973	1503	-	-	-
Mov Cap-2 Maneuver	772	-	-	-	-	-
Stage 1	937	-	-	-	-	-
Stage 2	896	-	-	-	-	-

Approach	EB	NB	SB
HCM Control Delay, s	9.7	0	0
HCM LOS	A		

Minor Lane/Major Mvmt	NBL	NBT	EBLn1	SBT	SBR
Capacity (veh/h)	1503	-	772	-	-
HCM Lane V/C Ratio	-	-	0.014	-	-
HCM Control Delay (s)	0	-	9.7	-	-
HCM Lane LOS	A	-	A	-	-
HCM 95th %tile Q(veh)	0	-	0	-	-

Intersection	
Int Delay, s/veh	0.9

Movement	WBL	WBR	NBT	NBR	SBL	SBT
Lane Configurations						
Traffic Vol, veh/h	0	0	0	0	0	0
Future Vol, veh/h	0	11	104	0	13	83
Conflicting Peds, #/hr	0	0	0	0	0	0
Sign Control	Stop	Stop	Free	Free	Free	Free
RT Channelized	-	None	-	None	-	None
Storage Length	0	-	-	-	-	-
Veh in Median Storage, #	0	-	0	-	-	0
Grade, %	0	-	0	-	-	0
Peak Hour Factor	100	100	100	100	100	100
Heavy Vehicles, %	2	2	2	2	2	2
Mvmt Flow	0	11	104	0	13	83

Major/Minor	Minor1		Major1		Major2	
Conflicting Flow All	213	104	0	0	104	0
Stage 1	104	-	-	-	-	-
Stage 2	109	-	-	-	-	-
Critical Hdwy	6.42	6.22	-	-	4.12	-
Critical Hdwy Stg 1	5.42	-	-	-	-	-
Critical Hdwy Stg 2	5.42	-	-	-	-	-
Follow-up Hdwy	3.518	3.318	-	-	2.218	-
Pot Cap-1 Maneuver	775	951	-	-	1488	-
Stage 1	920	-	-	-	-	-
Stage 2	916	-	-	-	-	-
Platoon blocked, %			-	-		-
Mov Cap-1 Maneuver	768	951	-	-	1488	-
Mov Cap-2 Maneuver	768	-	-	-	-	-
Stage 1	920	-	-	-	-	-
Stage 2	908	-	-	-	-	-

Approach	WB	NB	SB
HCM Control Delay, s	8.8	0	1
HCM LOS	A		

Minor Lane/Major Mvmt	NBT	NBR	WBLn1	SBL	SBT
Capacity (veh/h)	-	-	951	1488	-
HCM Lane V/C Ratio	-	-	0.012	0.009	-
HCM Control Delay (s)	-	-	8.8	7.4	0
HCM Lane LOS	-	-	A	A	A
HCM 95th %tile Q(veh)	-	-	0	0	-

Lane Group	EBT	EBR	WBL	WBT	NBL	NBR
Lane Group Flow (vph)	808	158	35	557	120	24
v/c Ratio	0.51	0.21	0.14	0.35	0.22	0.05
Control Delay	7.6	1.9	6.6	6.4	11.6	6.1
Queue Delay	0.0	0.0	0.0	0.0	0.0	0.0
Total Delay	7.6	1.9	6.6	6.4	11.6	6.1
Queue Length 50th (ft)	46	0	3	28	15	0
Queue Length 95th (ft)	72	16	12	47	51	12
Internal Link Dist (ft)	1563			2662	389	
Turn Bay Length (ft)		235	235		200	
Base Capacity (vph)	2405	1104	379	2405	546	505
Starvation Cap Reductn	0	0	0	0	0	0
Spillback Cap Reductn	0	0	0	0	0	0
Storage Cap Reductn	0	0	0	0	0	0
Reduced v/c Ratio	0.34	0.14	0.09	0.23	0.22	0.05

Intersection Summary

Movement	EBT	EBR	WBL	WBT	NBL	NBR
Lane Configurations						
Traffic Volume (veh/h)	479	0	0	344	0	0
Future Volume (veh/h)	808	158	35	557	120	24
Initial Q (Qb), veh	0	0	0	0	0	0
Ped-Bike Adj(A_pbT)		1.00	1.00		1.00	1.00
Parking Bus, Adj	1.00	1.00	1.00	1.00	1.00	1.00
Work Zone On Approach	No			No	No	
Adj Sat Flow, veh/h/ln	1870	1870	1870	1870	1870	1870
Adj Flow Rate, veh/h	808	158	35	557	120	24
Peak Hour Factor	1.00	1.00	1.00	1.00	1.00	1.00
Percent Heavy Veh, %	2	2	2	2	2	2
Cap, veh/h	1448	620	363	1448	586	522
Arrive On Green	0.41	0.39	0.39	0.41	0.33	0.33
Sat Flow, veh/h	3647	1585	582	3647	1781	1585
Grp Volume(v), veh/h	808	158	35	557	120	24
Grp Sat Flow(s),veh/h/ln	1777	1585	582	1777	1781	1585
Q Serve(g_s), s	5.3	2.0	1.5	3.3	1.5	0.3
Cycle Q Clear(g_c), s	5.3	2.0	6.8	3.3	1.5	0.3
Prop In Lane		1.00	1.00		1.00	1.00
Lane Grp Cap(c), veh/h	1448	620	363	1448	586	522
V/C Ratio(X)	0.56	0.25	0.10	0.38	0.20	0.05
Avail Cap(c_a), veh/h	2573	1122	547	2573	586	522
HCM Platoon Ratio	1.00	1.00	1.00	1.00	1.00	1.00
Upstream Filter(I)	1.00	1.00	1.00	1.00	1.00	1.00
Uniform Delay (d), s/veh	6.9	6.3	9.9	6.3	7.3	6.9
Incr Delay (d2), s/veh	0.3	0.2	0.1	0.2	0.8	0.2
Initial Q Delay(d3),s/veh	0.0	0.0	0.0	0.0	0.0	0.0
%ile BackOfQ(50%),veh/ln	0.6	0.2	0.1	0.4	0.5	0.1
Unsig. Movement Delay, s/veh						
LnGrp Delay(d),s/veh	7.2	6.5	10.0	6.5	8.1	7.1
LnGrp LOS	A	A	B	A	A	A
Approach Vol, veh/h	966			592	144	
Approach Delay, s/veh	7.1			6.7	8.0	
Approach LOS	A			A	A	

Timer - Assigned Phs		2		4			8
Phs Duration (G+Y+Rc), s		14.0		16.4			16.4
Change Period (Y+Rc), s		4.5		4.5			4.5
Max Green Setting (Gmax), s		9.5		21.5			21.5
Max Q Clear Time (g_c+I1), s		3.5		7.3			8.8
Green Ext Time (p_c), s		0.2		4.6			2.8

Intersection Summary	
HCM 6th Ctrl Delay	7.0
HCM 6th LOS	A

Lane Group	EBT	EBR	WBL	WBT	NBL	NBR
Lane Group Flow (vph)	572	260	22	377	215	15
v/c Ratio	0.40	0.34	0.07	0.26	0.38	0.03
Control Delay	7.5	2.7	6.9	6.7	11.0	5.2
Queue Delay	0.0	0.0	0.0	0.0	0.0	0.0
Total Delay	7.5	2.7	6.9	6.7	11.0	5.2
Queue Length 50th (ft)	28	0	2	17	24	0
Queue Length 95th (ft)	65	26	11	43	73	8
Internal Link Dist (ft)	2662			2074	294	
Turn Bay Length (ft)		235	235			
Base Capacity (vph)	2256	1080	504	2256	1128	1014
Starvation Cap Reductn	0	0	0	0	0	0
Spillback Cap Reductn	0	0	0	0	0	0
Storage Cap Reductn	0	0	0	0	0	0
Reduced v/c Ratio	0.25	0.24	0.04	0.17	0.19	0.01

Intersection Summary

Movement	EBT	EBR	WBL	WBT	NBL	NBR
Lane Configurations						
Traffic Volume (veh/h)	479	0	0	344	0	0
Future Volume (veh/h)	572	260	22	377	215	15
Initial Q (Qb), veh	0	0	0	0	0	0
Ped-Bike Adj(A_pbT)		1.00	1.00		1.00	1.00
Parking Bus, Adj	1.00	1.00	1.00	1.00	1.00	1.00
Work Zone On Approach	No			No	No	
Adj Sat Flow, veh/h/ln	1870	1870	1870	1870	1870	1870
Adj Flow Rate, veh/h	572	260	22	377	215	15
Peak Hour Factor	1.00	1.00	1.00	1.00	1.00	1.00
Percent Heavy Veh, %	2	2	2	2	2	2
Cap, veh/h	1395	586	491	1395	441	392
Arrive On Green	0.39	0.37	0.37	0.39	0.25	0.25
Sat Flow, veh/h	3647	1585	660	3647	1781	1585
Grp Volume(v), veh/h	572	260	22	377	215	15
Grp Sat Flow(s),veh/h/ln	1777	1585	660	1777	1781	1585
Q Serve(g_s), s	2.6	2.7	0.6	1.6	2.3	0.2
Cycle Q Clear(g_c), s	2.6	2.7	3.2	1.6	2.3	0.2
Prop In Lane		1.00	1.00		1.00	1.00
Lane Grp Cap(c), veh/h	1395	586	491	1395	441	392
V/C Ratio(X)	0.41	0.44	0.04	0.27	0.49	0.04
Avail Cap(c_a), veh/h	2959	1284	781	2959	1483	1320
HCM Platoon Ratio	1.00	1.00	1.00	1.00	1.00	1.00
Upstream Filter(I)	1.00	1.00	1.00	1.00	1.00	1.00
Uniform Delay (d), s/veh	4.9	5.3	6.4	4.6	7.2	6.4
Incr Delay (d2), s/veh	0.2	0.5	0.0	0.1	0.8	0.0
Initial Q Delay(d3),s/veh	0.0	0.0	0.0	0.0	0.0	0.0
%ile BackOfQ(50%),veh/ln	0.0	0.1	0.0	0.0	0.5	0.0
Unsig. Movement Delay, s/veh						
LnGrp Delay(d),s/veh	5.1	5.8	6.4	4.7	8.0	6.4
LnGrp LOS	A	A	A	A	A	A
Approach Vol, veh/h	832			399	230	
Approach Delay, s/veh	5.3			4.8	7.9	
Approach LOS	A			A	A	

Timer - Assigned Phs		2		4			8
Phs Duration (G+Y+Rc), s		9.5		12.7			12.7
Change Period (Y+Rc), s		4.5		4.5			4.5
Max Green Setting (Gmax), s		18.0		18.0			18.0
Max Q Clear Time (g_c+I1), s		4.3		4.7			5.2
Green Ext Time (p_c), s		0.5		3.5			1.8

Intersection Summary	
HCM 6th Ctrl Delay	5.6
HCM 6th LOS	A

Appendix H

SIGNAL WARRANTS

1. AUTUMN GLEN AVE/FONTAINE BLVD

2. MINOR ARTERIAL A/FONTAINE BLVD

HCS7 Warrants Report

Project Information

Analyst	Matrix Design Group	Date	01/08/2021
Agency		Analysis Year	2040
Jurisdiction		Time Period Analyzed	2040 PM
Project Description	Corvallis Development		

General

Major Street Direction	East-West	Population < 10,000	No
Starting Time Interval	15	Coordinated Signal System	No
Median Type	Undivided	Crashes (crashes/year)	0
Major Street Speed (mi/h)	45	Adequate Trials of Crash Exp. Alt.	No
Nearest Signal (ft)	2640		

Geometry and Traffic

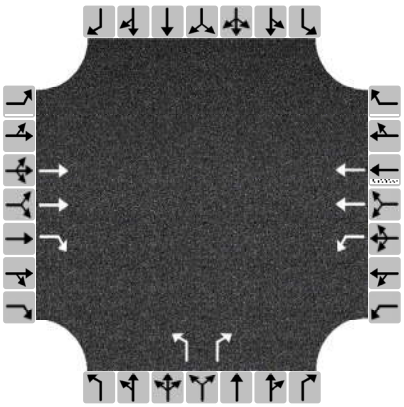

Approach	Eastbound			Westbound			Northbound			Southbound		
Movement	L	T	R	L	T	R	L	T	R	L	T	R
Number of Lanes, N	0	2	1	1	2	0	1	0	1	0	0	0
Lane Usage		T	R	L	T		L		R			
Vehicle Volumes Averages (veh/h)	0	462	90	20	319	0	68	0	13	0	0	0
Pedestrian Averages (peds/h)	0			0			0			0		
Gap Averages (gaps/h)	0			0			0			0		
Delay (s/veh)	0.0			0.0			0.0			0.0		
Delay (veh-hrs)	0.0			0.0			0.0			0.0		

School Crossing and Roadway Network

Number of Students in Highest Hour	0	Two or More Major Routes	No
Number of Adequate Gaps in Period	0	Weekend Counts	No
Number of Minutes in Period	0	5-year Growth Factor (%)	0

Railroad Crossing

Grade Crossing Approach	None	Rail Traffic (trains/day)	4
Highest Volume Hour with Trains	Unknown	High Occupancy Buses (%)	0
Distance to Stop Line (ft)		Tractor-Trailer Trucks (%)	10

HCS7 Warrants Report

Volume Summary

Hour	Major Volume	Minor Volume	Total Volume	Peds/h	Gaps/h	1A (70%)	1A (56%)	1B (70%)	1B (56%)	2 (70%)	3A (70%)	3B (70%)	4A (70%)	4B (70%)
07 - 08	1558	144	1702	0	0	Yes	Yes	Yes	Yes	Yes	No	Yes	No	No
08 - 09	1506	139	1645	0	0	No	Yes	Yes	Yes	Yes	No	Yes	No	No
09 - 10	1432	132	1564	0	0	No	Yes	Yes	Yes	Yes	No	Yes	No	No
10 - 11	1315	121	1436	0	0	No	Yes	Yes	Yes	Yes	No	Yes	No	No
11 - 12	1271	118	1389	0	0	No	Yes	Yes	Yes	Yes	No	Yes	No	No
12 - 13	1251	115	1366	0	0	No	Yes	Yes	Yes	Yes	No	Yes	No	No
13 - 14	1202	112	1314	0	0	No	Yes	Yes	Yes	Yes	No	Yes	No	No
14 - 15	1176	109	1285	0	0	No	No	Yes	Yes	Yes	No	Yes	No	No
15 - 16	0	0	0	0	0	No	No	No	No	No	No	No	No	No
16 - 17	0	0	0	0	0	No	No	No	No	No	No	No	No	No
17 - 18	0	0	0	0	0	No	No	No	No	No	No	No	No	No
18 - 19	0	0	0	0	0	No	No	No	No	No	No	No	No	No
Total	10711	990	11701	0	0	1	7	8	8	8	0	8	0	0

Warrants

Warrant 1: Eight-Hour Vehicular Volume	✔
A. Minimum Vehicular Volumes (Both major approaches --and-- higher minor approach) --or--	
B. Interruption of Continuous Traffic (Both major approaches --and-- higher minor approach) --or--	✓
56% Vehicular --and-- Interruption Volumes (Both major approaches --and-- higher minor approach)	
Warrant 2: Four-Hour Vehicular Volume	✔
Four-Hour Vehicular Volume (Both major approaches --and-- higher minor approach)	✓
Warrant 3: Peak Hour	✔
A. Peak-Hour Conditions (Minor delay -- and-- minor volume --and-- total volume) --or--	
B. Peak-Hour Vehicular Volumes (Both major approaches --and-- higher minor approach)	✓
Warrant 4: Pedestrian Volume	
A. Four Hour Volumes --or--	
B. One-Hour Volumes	
Warrant 5: School Crossing	
Gaps Same Period --and--	
Student Volumes	
Nearest Traffic Control Signal (optional)	✓
Warrant 6: Coordinated Signal System	
Degree of Platooning (Predominant direction or both directions)	
Warrant 7: Crash Experience	
A. Adequate trials of alternatives, observance and enforcement failed --and--	
B. Reported crashes susceptible to correction by signal (12-month period) --and--	
C. 56% Volumes for Warrants 1A, 1B, --or-- 4 are satisfied	✓
Warrant 8: Roadway Network	
A. Weekday Volume (Peak hour total --and-- projected warrants 1, 2, or 3) --or--	
B. Weekend Volume (Five hours total)	
Warrant 9: Grade Crossing	
A. Grade Crossing within 140 ft --and--	
B. Peak-Hour Vehicular Volumes	

HCS7 Warrants Report

Project Information

Analyst	Matrix Design Group	Date	01/08/2021
Agency		Analysis Year	2040
Jurisdiction		Time Period Analyzed	2040 PM
Project Description	Corvallis Development		

General

Major Street Direction	East-West	Population < 10,000	No
Starting Time Interval	15	Coordinated Signal System	No
Median Type	Undivided	Crashes (crashes/year)	0
Major Street Speed (mi/h)	45	Adequate Trials of Crash Exp. Alt.	No
Nearest Signal (ft)	2640		

Geometry and Traffic

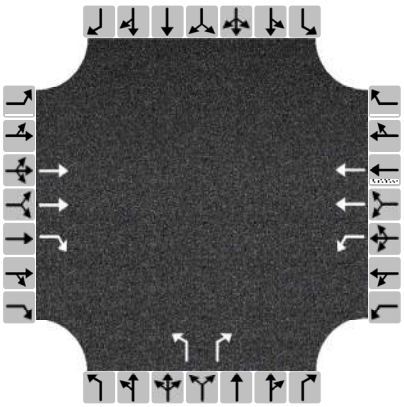

Approach	Eastbound			Westbound			Northbound			Southbound		
Movement	L	T	R	L	T	R	L	T	R	L	T	R
Number of Lanes, N	0	2	1	1	2	0	1	0	1	0	0	0
Lane Usage		T	R	L	T		L		R			
Vehicle Volumes Averages (veh/h)	0	327	149	12	216	0	123	0	8	0	0	0
Pedestrian Averages (peds/h)	0			0			0			0		
Gap Averages (gaps/h)	0			0			0			0		
Delay (s/veh)	0.0			0.0			0.0			0.0		
Delay (veh-hrs)	0.0			0.0			0.0			0.0		

School Crossing and Roadway Network

Number of Students in Highest Hour	0	Two or More Major Routes	No
Number of Adequate Gaps in Period	0	Weekend Counts	No
Number of Minutes in Period	0	5-year Growth Factor (%)	0

Railroad Crossing

Grade Crossing Approach	None	Rail Traffic (trains/day)	4
Highest Volume Hour with Trains	Unknown	High Occupancy Buses (%)	0
Distance to Stop Line (ft)		Tractor-Trailer Trucks (%)	10

HCS7 Warrants Report

Volume Summary

Hour	Major Volume	Minor Volume	Total Volume	Peds/h	Gaps/h	1A (70%)	1A (56%)	1B (70%)	1B (56%)	2 (70%)	3A (70%)	3B (70%)	4A (70%)	4B (70%)
07 - 08	1231	230	1461	0	0	Yes	Yes	Yes	Yes	Yes	No	Yes	No	No
08 - 09	1189	222	1411	0	0	Yes	Yes	Yes	Yes	Yes	No	Yes	No	No
09 - 10	1132	212	1344	0	0	Yes	Yes	Yes	Yes	Yes	No	Yes	No	No
10 - 11	1040	195	1235	0	0	Yes	Yes	Yes	Yes	Yes	No	Yes	No	No
11 - 12	1005	187	1192	0	0	Yes	Yes	Yes	Yes	Yes	No	Yes	No	No
12 - 13	989	185	1174	0	0	Yes	Yes	Yes	Yes	Yes	No	Yes	No	No
13 - 14	950	178	1128	0	0	Yes	Yes	Yes	Yes	Yes	No	Yes	No	No
14 - 15	930	173	1103	0	0	Yes	Yes	Yes	Yes	Yes	No	Yes	No	No
15 - 16	0	0	0	0	0	No	No	No	No	No	No	No	No	No
16 - 17	0	0	0	0	0	No	No	No	No	No	No	No	No	No
17 - 18	0	0	0	0	0	No	No	No	No	No	No	No	No	No
18 - 19	0	0	0	0	0	No	No	No	No	No	No	No	No	No
Total	8466	1582	10048	0	0	8	8	8	8	8	0	8	0	0

Warrants

Warrant 1: Eight-Hour Vehicular Volume	✔
A. Minimum Vehicular Volumes (Both major approaches --and-- higher minor approach) --or--	✓
B. Interruption of Continuous Traffic (Both major approaches --and-- higher minor approach) --or--	✓
56% Vehicular --and-- Interruption Volumes (Both major approaches --and-- higher minor approach)	✓
Warrant 2: Four-Hour Vehicular Volume	✔
Four-Hour Vehicular Volume (Both major approaches --and-- higher minor approach)	✓
Warrant 3: Peak Hour	✔
A. Peak-Hour Conditions (Minor delay -- and-- minor volume --and-- total volume) --or--	
B. Peak-Hour Vehicular Volumes (Both major approaches --and-- higher minor approach)	✓
Warrant 4: Pedestrian Volume	
A. Four Hour Volumes --or--	
B. One-Hour Volumes	
Warrant 5: School Crossing	
Gaps Same Period --and--	
Student Volumes	
Nearest Traffic Control Signal (optional)	✓
Warrant 6: Coordinated Signal System	
Degree of Platooning (Predominant direction or both directions)	
Warrant 7: Crash Experience	
A. Adequate trials of alternatives, observance and enforcement failed --and--	
B. Reported crashes susceptible to correction by signal (12-month period) --and--	
C. 56% Volumes for Warrants 1A, 1B, --or-- 4 are satisfied	✓
Warrant 8: Roadway Network	
A. Weekday Volume (Peak hour total --and-- projected warrants 1, 2, or 3) --or--	
B. Weekend Volume (Five hours total)	
Warrant 9: Grade Crossing	
A. Grade Crossing within 140 ft --and--	
B. Peak-Hour Vehicular Volumes	