ENTECH
ENGINEERING, INC.
505 ELKTON DRIVE
COLORADO SPRINGS, CO 80907
PHONE (719) 531-5599
FAX (719) 531-5238

December 28, 2021

Kurtis Brown c/o TNE, Inc.
721 South 23rd Street
Colorado Springs, CO 80904

Attn: Kurtis Brown

Re: Soil, Geology, and Geologic Hazard Study
6665 Walker Road
Parcel No. 51000-00-421
El Paso County, Colorado

Dear Mr. Brown:

GENERAL SITE CONDITIONS AND PROJECT DESCRIPTION

The site is located in the NW¼ of the SE¼ of Section 18 Township 11 South, Range 65 West of the 6th Principal Meridian in El Paso County, Colorado. The site is located approximately 8 miles east the town of Monument, in El Paso County, Colorado. The location of the site is as shown on the Vicinity Map, Figure 1.

A ridge bisects the central portion of the site with gradual slopes to the north and south of the ridge and gradual to moderate slopes along the drainages, seasonal pond, and earthen dam. Minor drainages are located north and south of the ridge and there is a seasonal pond in the south-central portion of the site. Water was not observed in the drainages or pond at the time of this investigation. There is an existing single family residential structure and several auxiliary buildings on Lot 1 as shown on the site plan, Figure, 3. The site boundaries are indicated on the USGS Map, Figure 2. Previous land uses have included agricultural grazing land, vacant land, and residential. The site contains field grasses, weeds, and some planted trees around the existing structure. Site photographs taken November 11, 2021, are included in Appendix A.

Total acreage involved in the proposed subdivision is 37.5-acres. A total of five lots are proposed with four new rural residential lots. The existing residential structure will remain on the Lot 1. The new proposed lot sizes range from 6.0-acres to 6.4-acres, and Lot 1 with the existing house is 12.7-acres. The new lots will be serviced by individual wells and on-site wastewater treatment systems. The Site Plan is presented in Figure 3.

LAND USE AND ENGINEERING GEOLOGY

This site was found to be suitable for the proposed development. Areas were encountered where the geologic conditions will impose some constraints on development and land use. These include areas of artificial fill, potentially seasonal shallow groundwater, and seasonally wet areas. Based on the proposed development plan, it appears that these areas will have minor impacts on the development. These conditions will be discussed in greater detail in the report.

In general, it is our opinion that the development can be achieved if the observed geologic conditions on site are either avoided or properly mitigated. All recommendations are subject to the limitations discussed in the report.

SCOPE OF THE REPORT

The scope of the report will include the following:

- A general geologic analysis utilizing published geologic data. Detailed site-specific mapping will be conducted to obtain general information in respect to major geographic and geologic features, geologic descriptions and their effects on the development of the property.

FIELD INVESTIGATION

Our field investigation consisted of the preparation of a geologic map of bedrock features and significant surficial deposits. The Natural Resource Conservation Service (NRCS), previously the Soil Conservation Service (SCS) survey was also reviewed to evaluate the site. The position of mappable units within the subject property are shown on the Geologic Map. Our mapping procedures involved both field reconnaissance and measurements, and aerial photo reconnaissance and interpretation. The same mapping procedures have also been utilized to produce the Geology/Engineering Geology Map which identified pertinent geologic conditions affecting development. The field mapping was performed by personnel of Entech Engineering, Inc. on November 11, 2021.

Two test borings were drilled and two test pits were excavated on the site to determine general suitability of the soil characteristics for residential construction. The locations of the test borings/pits are indicated on the Site Plan/Test Boring Location Map, Figure 3. The Test Boring and Test Pit Logs are presented in Appendix B. Results of this testing will be discussed later in this report.

Laboratory testing was also performed on some of the soils to classify and determine the soils engineering characteristics. Laboratory tests included grain-size analysis, ASTM D-422. Results of the laboratory testing are included in Appendix C.

SOIL AND GEOLOGIC CONDITIONS

Soil Survey

The Natural Resource Conservation Service (NRCS) (Reference 1, Figure 4), previously the Soil Conservation Service (Reference 2) has mapped two soil types on the site. Complete descriptions of the soil types are presented in Appendix D. In general, the soils consist of sandy loam to gravelly loamy sand to sandy clay. The soils are described as follows:

Type	Description
67	Peyton sandy loam, 5 to 9 percent slopes
69	Peyton-Pring complex, 8 to 15 percent slopes

The soils have been described to have moderate to rapid permeabilities. The soils are described as well suited for use as homesites. Possible hazards with soils erosion are present on the site. The erosion potential can be controlled with vegetation, erosion control blankets or waddles. Erosion is of limited concern to this site due to its proximity to the seasonally wet pond. The soils have been described to have moderate erosion hazards (Reference 2).

Soils

The soils encountered in the test borings consisted of very sandy to sandy silt, and sandy clay overlying silty sandstone. Bedrock was encountered at depths of 1 to 4 feet in the test borings. The upper silts were encountered at stiff consistencies and moist conditions. The sandstone was encountered at very dense states and moderate moisture conditions. The sample of silt tested had approximately 62 percent of the soil size particles passing the No. 200 sieve. The samples of sandstone tested had 18 to 20 percent of the soil size particles passing the No. 200 sieve. The silt and sandstone typically have low expansion potential. Highly expansive claystone and siltstone lenses are commonly interbedded in the sandstone in the area.

Groundwater

Groundwater was not encountered in the test borings which were drilled to depths of 20 feet. Groundwater is not anticipated to affect shallow foundations on the majority of the site. Areas of potentially seasonal shallow groundwater and seasonally wet areas have been mapped on the site, and are discussed in the following section. Fluctuations in groundwater conditions may occur due to variations in rainfall or other factors not readily apparent at this time. Isolated sand layers within the soil profile can carry water in the subsurface. Contractors should be cognizant of the potential for the occurrence of subsurface water features during construction.

Geology

Approximately 11½ miles west of the site is a major structural feature known as the Rampart Range Fault. This fault marks the boundary between the Great Plains Physiographic Province and the Southern Rocky Mountain Province. The site exists within a large structural feature known as the Denver Basin. Bedrock in the area is typically gently dipping in a northeasterly direction (Reference 3). The bedrock underlying the site consists of the Dawson Formation of Tertiary to Cretaceous Age. The Dawson Formation typically consists of coarse-grained arkosic sandstone with interbedded layers of claystone or siltstone.

The geology of the site was evaluated using the *Geologic Map of the Black Forest Quadrangle* distributed by the Colorado Geologic Survey in 2003 (Reference 4, Figure 5). The Geology Map for the site is presented in Figure 6. Two mappable units were identified on this site which is described as follows:

Qaf **Artificial Fill of Holocene Age:** These are man-made fill deposits associated with erosion berms, earthen dams on-site, and a fill pile of manure.

Qc/Tkd **Colluvium of Quaternary Age overlying Dawson Formation of Tertiary to Cretaceous Age:** The materials consist of colluvial and residual soils overlying the bedrock materials on the site. The colluvial soils were deposited by the action of sheetwash and gravity. The residual soils were derived from the in-situ weathering of the bedrock on site. These materials typically consist of silty to clayey sand and sandy clays. The bedrock consists of the Dawson Formation. The Dawson Formation typically consists of coarse-grained, arkosic sandstone with interbedded lenses of fine-grained sandstone, siltstone and claystone.

The soils listed above were mapped from site-specific mapping, the *Geologic Map of the Black Forest Quadrangle* distributed by the Colorado Geologic Survey in 2003 (Reference 4, Figure 5), the *Geologic Map of the Colorado Springs-Castle Rock Area,* distributed by the US Geological Survey in 1979 (Reference 5), and the *Geologic Map of the Denver 1° x 2° Quadrangle,* distributed by the US Geological Survey in 1981 (Reference 6). The test borings were used in evaluating the site and are included in Appendix B. The Geology Map prepared for the site is presented in Figure 6.

ENGINEERING GEOLOGIC HAZARDS

Mapping has been performed on this site to identify areas where various geologic conditions exist of which developers should be cognizant during the planning, design and construction stages where new construction is proposed. The engineering geologic hazards identified on this site include areas of artificial fill, potentially seasonal shallow groundwater, and seasonally wet areas, as indicated on the Geology/Engineering Geology Map, Figure 6. Potential hazards including expansive soils have also been addressed below. These hazards and recommended mitigation techniques are discussed as follows:

Artificial Fill – Constraint

These are man-made fill deposits associated with erosion berms and earthen dams on site. There is also a manure pile that is indicated on the Geology/Engineering Geology Map, Figure 6.

Mitigation: The earthen dam embankment will be avoided by the development. Small erosion berms can be removed or penetrated by foundations. Should any uncontrolled fill be encountered beneath foundations, removal and recompaction at 95% of its maximum Modified Proctor Dry Density, ASTM D-1557 will be required.

Expansive Soils - Constraint

Expansive soils were not encountered in the test borings. However, highly expansive claystone and siltstone are commonly interbedded in the sandstone of the Dawson Formation. Expansive clays or bedrock, if encountered beneath foundations, can cause differential movement in the structure foundation.

Mitigation: Should expansive soils be encountered beneath the foundation; mitigation will be necessary. Mitigation of expansive soils will require special foundation design. Overexcavation and replacement with non-expansive soils at a minimum of 95% of its maximum Modified Proctor Dry Density, ASTM D-1557 is a suitable mitigation, which is common in the area. Overexcavation depths of 4 to 6 feet are typical. Floor slabs on expansive soils should be expected to experience movement. Overexcavation and replacement has been successful in minimizing slab movements.

Drainage Areas

The site is not mapped within any floodplains according to the FEMA Map No. 08041CO305G, dated December 7, 2018 (Figure 7, Reference 7). Minor areas of potentially seasonal shallow groundwater and seasonally wet areas were observed on the site (Figure 6) and are further discussed below. Several minor drainages are located on the site and a seasonal pond is located in the southern portion of the site.

In these areas, we would anticipate the potential for periodically high subsurface moisture conditions and frost heave potential. These areas lie within low-lying areas and along the head of a minor drainage swales on the site. Water was not observed in any of the drainages or pond at the time of our site investigation. These areas can likely be avoided or properly mitigated by development. The potential exists for high groundwater levels during high moisture periods and should structures encroach on these areas the following precautions should be followed.

Potentially Seasonal Shallow Groundwater Area – Constraint

The minor drainages have been mapped as potentially seasonal shallow groundwater areas. Additionally, the uphill sides of the erosion berms have the potential for seasonally shallow groundwater. In these areas, we would anticipate the potential for periodically high subsurface moisture conditions, frost heave potential. Construction in any portions of these areas, if required, or immediately adjacent to these areas should follow these precautions.

Mitigation: Foundations must have a minimum 30-inch depth for frost protection. In areas where high subsurface moisture conditions are anticipated periodically, subsurface perimeter drains are recommended to help prevent the intrusion of water into areas below grade. Typical drain details are presented in Figure 8. Any grading in these areas should be done to direct surface flow around construction to avoid areas of ponded water. All organic material would be completely removed prior to any fill placement. **Specific drainage studies are beyond the scope of this report.**

Seasonally Wet Area – Constraint

This is an area where water seasonally ponds behind a dam in the southern portion of the site. It is anticipated that these areas will be avoided by structures. There is sufficient area on Lot 3 to allow room for a structure and access. Construction is not recommended in the seasonally wet area.

RELEVANCE OF GEOLOGIC CONDITIONS TO LAND USE PLANNING

The proposed development will be rural-residential utilizing individual on-site wastewater treatment systems and water wells. Four new and one replated rural residential lots are proposed. The new lot sizes range from 6.0-acres to 6.5-acres and the existing lot will be 12.7-acres. The existing geologic and engineering geologic conditions will impose minor constraints on development and construction. The geologic constraints on the site include artificial fill, potentially seasonal shallow groundwater, and seasonally wet areas, which can be satisfactorily mitigated through avoidance or proper engineering design and construction practices.

The upper fine grained granular soils encountered in the test borings on the site were encountered at stiff consistencies, and the sandstone was encountered at very dense states. Sandstone bedrock was encountered at 1 to 4 feet in the test borings. High allowable bearing capacities should be expected in areas of shallow bedrock. Difficult excavation of the very dense sandstone should be expected.

The sandstone encountered in the test borings is considered to have low expansion potential, however, highly expansive claystone and siltstone are commonly interbedded in the sandstone of the Dawson Formation. Mitigation of expansive soils if encountered will be required. Overexcavation and replacement with non-expansive soils at a minimum of 95% of its maximum Modified Proctor Dry Density, ASTM D-1557 is a suitable mitigation, which is common in the area. Floor slabs on expansive soils should be expected to experience movement. Overexcavation and replacement has been successful in minimizing slab movements. These soils will not prohibit development.

A seasonal pond is located in the south-central portion of the southern half the proposed development. Additionally, minor drainage swales were observed across the site that were mapped as potentially seasonal shallow groundwater. Due to the size of the lots and the proposed development, these areas can be avoided by construction. Structures should not block drainages. Septic fields should not be located in these areas due to the potential for periodic high groundwater conditions.

In summary, the granular soils will likely provide suitable support for shallow foundations. The geologic conditions encountered on site can be mitigated with avoidance or proper engineering and construction practices.

ECONOMIC MINERAL RESOURCES

Some of the sandy materials on-site could be considered a low-grade sand resource. According to the *El Paso County Aggregate Resource Evaluation Map* (Reference 8), of the area of the site is not mapped with any potential aggregate resources. According to the *Atlas of Sand, Gravel and Quarry Aggregate Resources, Colorado Front Range Counties* distributed by the Colorado Geological Survey (Reference 9), the site is not mapped with any resources. According to the *Evaluation of Mineral and Mineral Fuel Potential* (Reference 10), the area of the site has been mapped as "little or no potential" for industrial minerals.

According to *the Evaluation of Mineral and Mineral Fuel Potential of El Paso County State Mineral Lands* (Reference 10), the site is mapped within the Denver Basin Coal Region. However, the area of the site has been mapped as "Poor" for coal resources. No active or inactive mines have been mapped in the area of the site. No metallic mineral resources have been mapped on the site (Reference 10).

The site has been mapped as "Fair" for oil and gas resources (Reference 10). No oil or gas fields have been discovered in the area of the site. The sedimentary rocks in the area may lack the geologic structure for trapping oil or gas; therefore, it may not be considered a significant resource. Hydraulic fracturing is a new method that is being used to extract oil and gas from rocks. It utilizes pressurized fluid to extract oil and gas from rocks that would not normally be productive. The area of the site has not been explored to determine if the rocks underlying the site would be commercially viable utilizing hydraulic fracturing. The practice of hydraulic fracturing has come under review due to concerns about environmental impacts, health and safety.

EROSION CONTROL

The soil types observed on the site are mildly to highly susceptible to wind erosion, and moderately to highly susceptible to water erosion. A minor wind erosion and dust problem may be created for a short time during and immediately after construction. Should the problem be considered severe enough during this time, watering of the cut areas or the use of chemical palliative may be required to control dust. However, once construction has been completed and vegetation re-established, the potential for wind erosion should be considerably reduced.

With regard to water erosion, loosely compacted soils will be the most susceptible to water erosion, residually weathered soils and weathered bedrock materials become increasingly less susceptible to water erosion. For the typical soils observed on site, allowable velocities or unvegetated and unlined earth channels would be on the order of 3 to 4 feet/second, depending upon the sediment load carried by the water. Permissible velocities may be increased through the use of vegetation to something on the order of 4 to 7 feet/second, depending upon the type of vegetation established. Should the anticipated velocities exceed these values, some form of channel lining material may be required to reduce erosion potential. These might consist of some of the synthetic channel lining materials on the market or conventional riprap. In cases where ditch-lining materials are still insufficient to control erosion, small check dams or sediment traps may be required. The check dams will serve to reduce flow velocities, as well as provide small traps for containing sediment. The determination of the amount, location and placement of ditch linings, check dams and of the special erosion control features should be performed by or in conjunction with the drainage engineer who is more familiar with the flow quantities and velocities.

Cut and fill slope areas will be subjected primarily to sheetwash and rill erosion. Unchecked rill erosion can eventually lead to concentrated flows of water and gully erosion. The best means to combat this type of erosion is, where possible, the adequate re-vegetation of cut and fill slopes. Cut and fill slopes having gradients more than three (3) horizontal to one (1) vertical become increasingly more difficult to revegetate successfully. Therefore, recommendations

pertaining to the vegetation of the cut and fill slopes may require input from a qualified landscape architect and/or the Soil Conservation Service.

ROADWAY AND EMBANKMENT CONSTRUCTION RECOMMENDATIONS

In general, the site soils are suitable for the proposed roadways and embankments. Groundwater may be expected to be encountered in deeper cuts and along drainage areas. If excavations encroach on the groundwater level unstable soil conditions may be encountered. Excavation of saturated soils will be difficult with rubber-tired equipment. Stabilization using shot rock or geogrids may be necessary.

Any areas to receive fill should have all topsoil, organic material or debris removed. Prior to fill placement Entech should observe the subgrade. Fill must be properly benched and compacted to minimize potentially unstable conditions in slope areas. Fill slopes should be 3:1. The subgrade should be scarified and moisture conditioned to within 2% of optimum moisture content and compacted to a minimum of 95% of its maximum Modified Proctor Dry Density, ASTM D-1557, prior to placing new fill. Areas receiving fill may require stabilization with rock or fabric if shallow groundwater conditions are encountered.

New fill should be placed in thin lifts not to exceed 6 inches after compaction while maintaining at least 95% of its maximum Modified Proctor Dry Density, ASTM D-1557. These materials should be placed at a moisture content conducive to compaction, usually 0 to ±2% of Proctor optimum moisture content. The placement and compaction of fill should be observed and tested by Entech during construction. Entech should approve any import materials prior to placing or hauling them to the site. Additional investigation will be required for pavement designs once roadway grading is completed and utilities are installed.

CLOSURE

It is our opinion that the existing geologic engineering and geologic conditions will impose some minor constraints on development and construction of the site. The majority of these conditions can be avoided by construction. Others can be mitigated through proper engineering design and construction practices. The proposed development and use are consistent with anticipated geologic and engineering geologic conditions.

It should be pointed out that because of the nature of data obtained by random sampling of such variable and non-homogeneous materials as soil and rock, it is important that we be informed of any differences observed between surface and subsurface conditions encountered in construction and those assumed in the body of this report. **Individual investigations for new building sites and septic systems will be required prior to construction.** Construction and design personnel should be made familiar with the contents of this report. Reporting such discrepancies to Entech Engineering, Inc. soon after they are discovered would be greatly appreciated and could possibly help avoid construction and development problems.

Kurtis Brown c/o TNE, Inc.
Soil, Geology, and Geologic Hazard Study
6665 Walker Road
Parcel No. 51000-00-421
El Paso County, Colorado

This report has been prepared for Kurtis Brown, for application to the proposed project in accordance with generally accepted geologic soil and engineering practices. No other warranty expressed or implied is made.

We trust that this report has provided you with all the information that you required. Should you require additional information, please do not hesitate to contact Entech Engineering, Inc.

Respectfully Submitted,

ENTECH ENGINEERING, INC.

Logan L. Langford, P.G.
Geologist

Reviewed by:

Joseph C. Goode, Jr., P.E.
President

COLORADO LICENSED
JOSEPH COLLIN GOODE
23725
12-28-21
PROFESSIONAL ENGINEER

LLL/jhr

Encl.

Entech Job No. 212979
AAprojects/2021/212979 sg&ghs

BIBLIOGRAPHY

1. Natural Resource Conservation *Service,* September 13, 2019. *Web Soil Survey.* United States Department Agriculture, http://websoilsurvey.sc.egov.usda.gov/App/HomePage.htm.

2. United States Department of Agriculture Soil Conservation Service. June 1981. *Soil Survey of El Paso County Area, Colorado.*

3. Bryant, Bruce; McGraw, Laura W.; and Wobus, Reinhard A. 1981. *Geologic Structure Map of the Denver 1° x 2° Quadrangle, North-Central Colorado.* Sheet 2. U.S. Geologic Survey. Map I-1163, Sheet 2.

4. Thorson, Jon P., 2003. *Geologic Map of the Black Forest Quadrangle, El Paso County, Colorado.* Colorado Geological Survey. Open-File Report 03-6.

5. Trimble, Donald E. and Machette, Michael N. 1979. *Geologic Map of the Colorado Springs-Castle Rock Area, Front Range Urban Corridor, Colorado.* USGS, Map I-857-F.

6. Bryant, Bruce; McGraw, Laura W.; and Wobus, Reinhard A. 1981. *Geologic Map of the Denver 1° x 2° Quadrangle, South-Central Colorado.* U.S. Geologic Survey. Map I-1163.

7. Federal Emergency Management Agency. December 7, 2018. *Flood Insurance Rate Maps for the City of Colorado Springs, Colorado.* Map Number 08041CO305G.

8. El Paso County Planning Development. December 1995. *El Paso County Aggregate Resource Evaluation Maps.*

9. Schwochow, S.D.; Shroba, R.R. and Wicklein, P.C. 1974. *Atlas of Sand, Gravel, and Quarry Aggregate Resources, Colorado Front Range Counties.* Colorado Geological Survey. Special Publication 5-B.

10. Keller, John W.; TerBest, Harry and Garrison, Rachel E. 2003. *Evaluation of Mineral and Mineral Fuel Potential of El Paso County State Mineral Lands Administered by the Colorado State Land Board.* Colorado Geological Survey. Open-File Report 03-07.

TABLE

TABLE 1

SUMMARY OF LABORATORY TEST RESULTS

CLIENT KURTIS BROWN
PROJECT 6665 WALKER ROAD
JOB NO. 212979

SOIL TYPE	TEST BORING NO.	DEPTH (FT)	WATER (%)	DRY DENSITY (PCF)	PASSING NO. 200 SIEVE (%)	LIQUID LIMIT (%)	PLASTIC INDEX (%)	SULFATE (WT %)	FHA SWELL (PSF)	SWELL/ CONSOL (%)	UNIFIED CLASSIFICATION	SOIL DESCRIPTION
1	2	2-3			61.4						ML	SILT, VERY SANDY
2	1	5			17.8	NV	NP				SM	SANDSTONE, SILTY
2	2	15			19.9						SM	SANDSTONE, SILTY

FIGURES

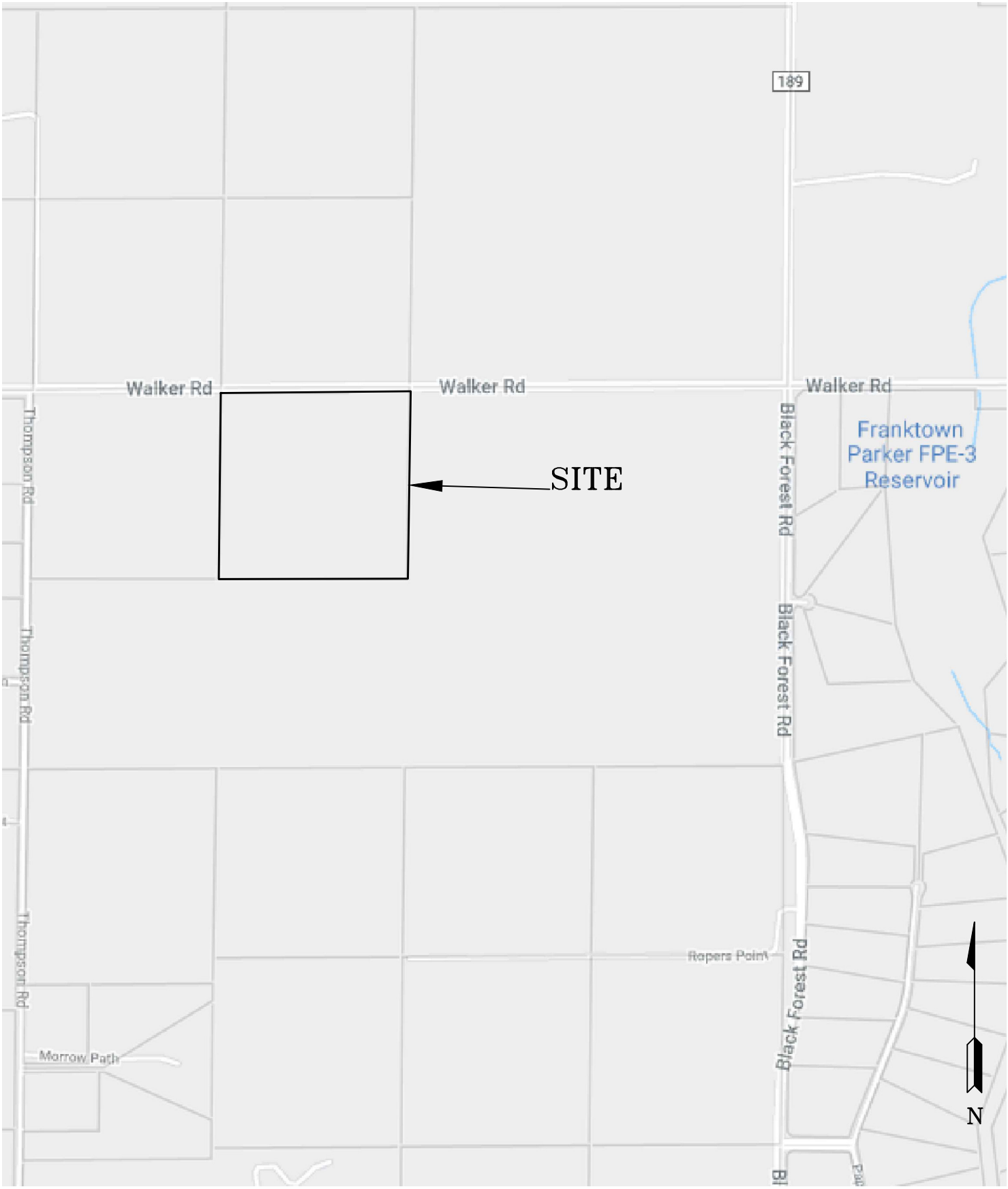

ENTECH ENGINEERING, INC.
505 ELKTON DRIVE
COLORADO SPRINGS, CO. 80907 (719) 531-5599

VICINITY MAP
6665 WALKER ROAD
COLORADO SPINGS
FOR: KURTIS BROWN
c/o TNE, INC.

DRAWN:	DATE:	CHECKED:	DATE:
JHR	12/10/21	LLL	

JOB NO.: 212979

FIG NO.: 1

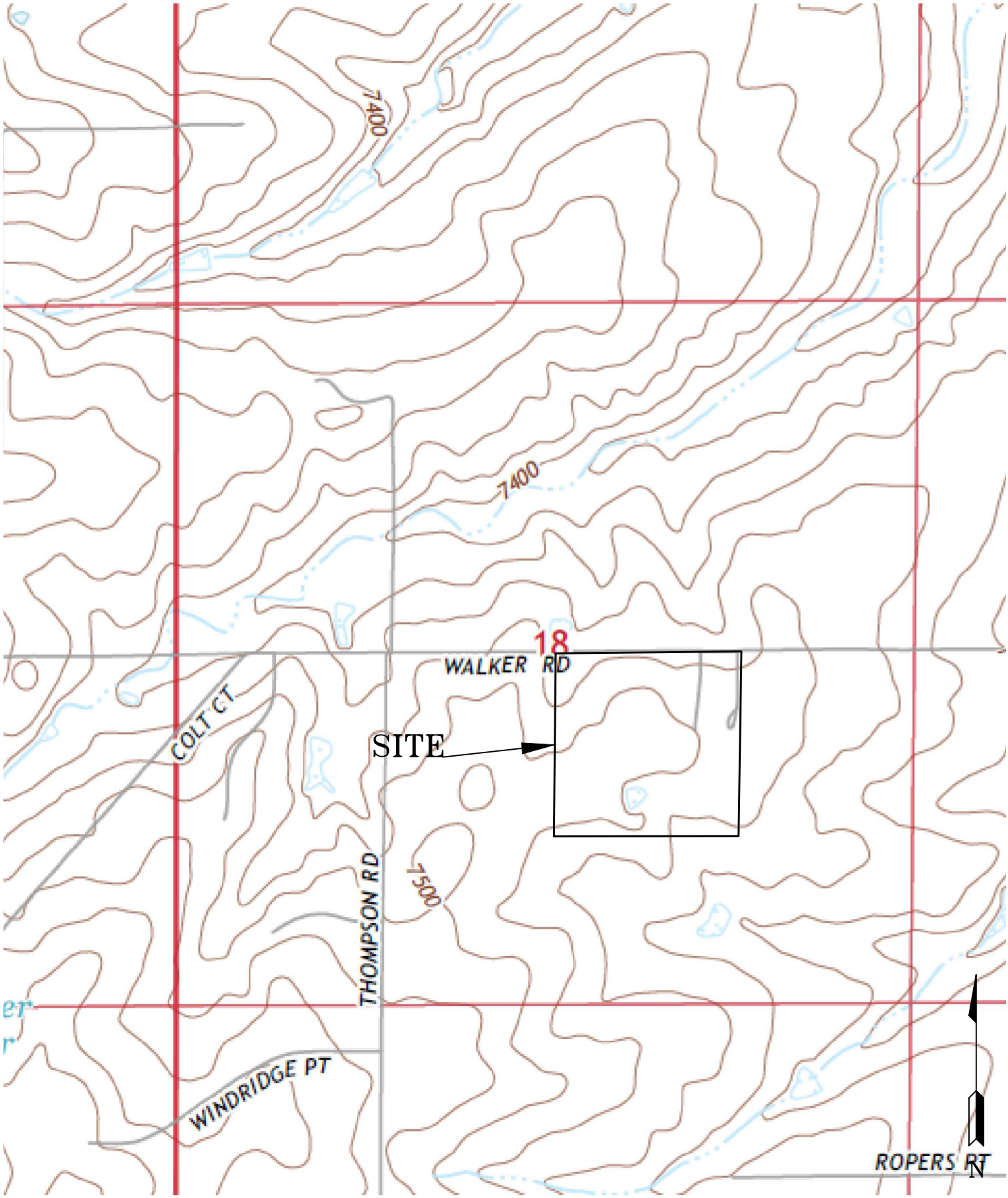

ENTECH
ENGINEERING, INC.
505 ELKTON DRIVE
COLORADO SPRINGS, CO. 80907 (719) 531-5599

USGS MAP
6665 WALKER ROAD
COLORADO SPINGS
FOR: KURTIS BROWN
c/o TNE, INC.

DRAWN:	DATE:	CHECKED:	DATE:
JHR	12/10/21	LLL	

JOB NO.: 212979

FIG NO.: 2

N

ENTECH
ENGINEERING, INC.
505 ELKTON DRIVE
COLORADO SPRINGS, CO. 80907 (719) 531-5599

SOIL SURVEY MAP
6665 WALKER ROAD
COLORADO SPINGS
FOR: KURTIS BROWN
c/o TNE, INC.

DRAWN:	DATE:	CHECKED:	DATE:
JHR	12/10/21	LLL	

JOB NO.: 212979

FIG NO.: 4

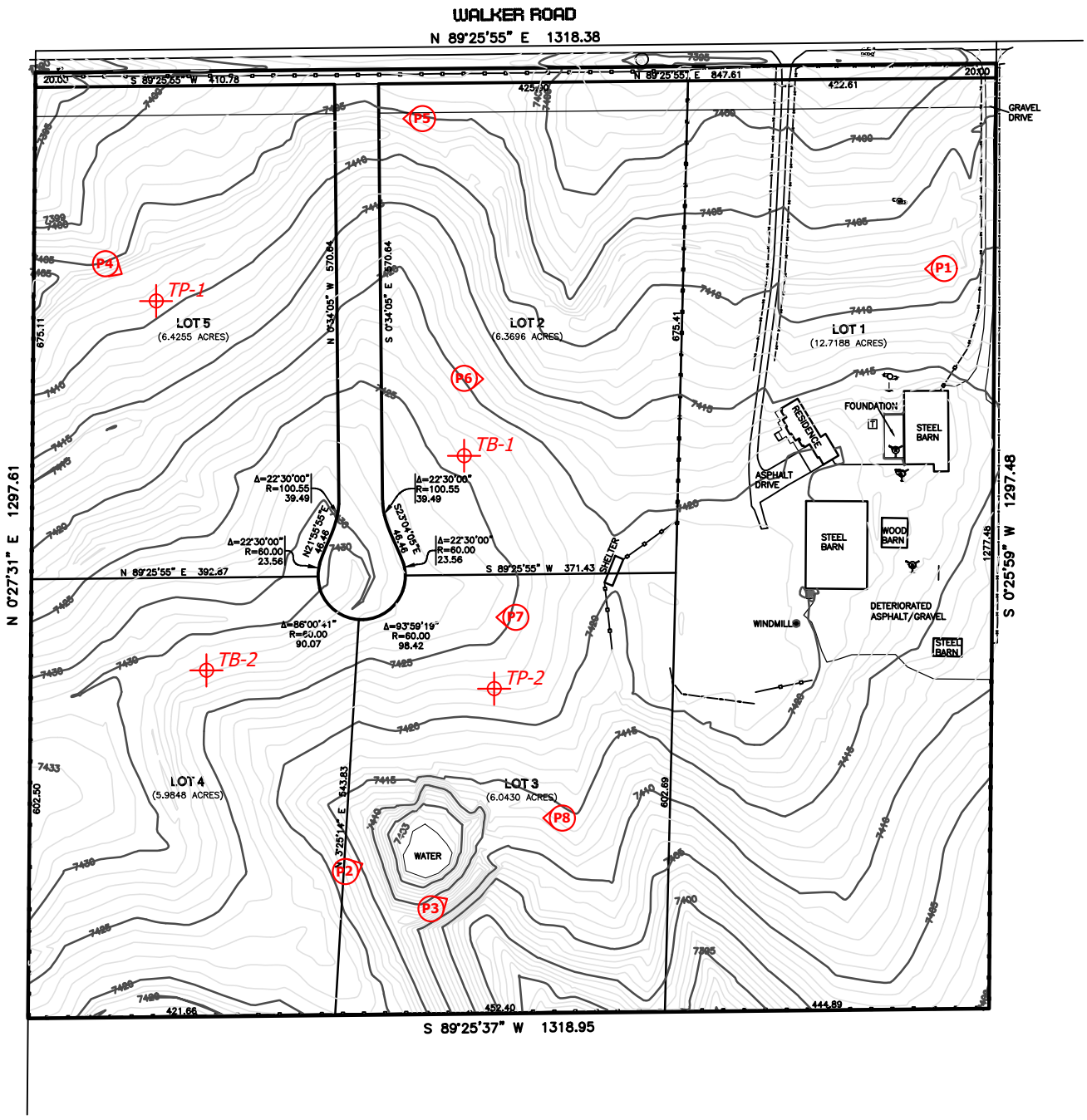

LEGEND:

TP- APPROXIMATE TEST PIT LOCATION AND NUMBER

P2 - APPROXIMATE PHOTOGRAPH LOCATION AND NUMBER

ENTECH ENGINEERING, INC.
505 ELKTON DRIVE
COLORADO SPRINGS, CO. 80907 (719) 531-5599

SITE PLAN/TESTING LOCATION MAP
6665 WALKER ROAD
COLORADO SPINGS
FOR: KURTIS BROWN
c/o TNE, INC.

DRAWN:	DATE:	CHECKED:	DATE:
JHR	12/10/21	LLL	

JOB NO.: 212979

FIG NO.: 3

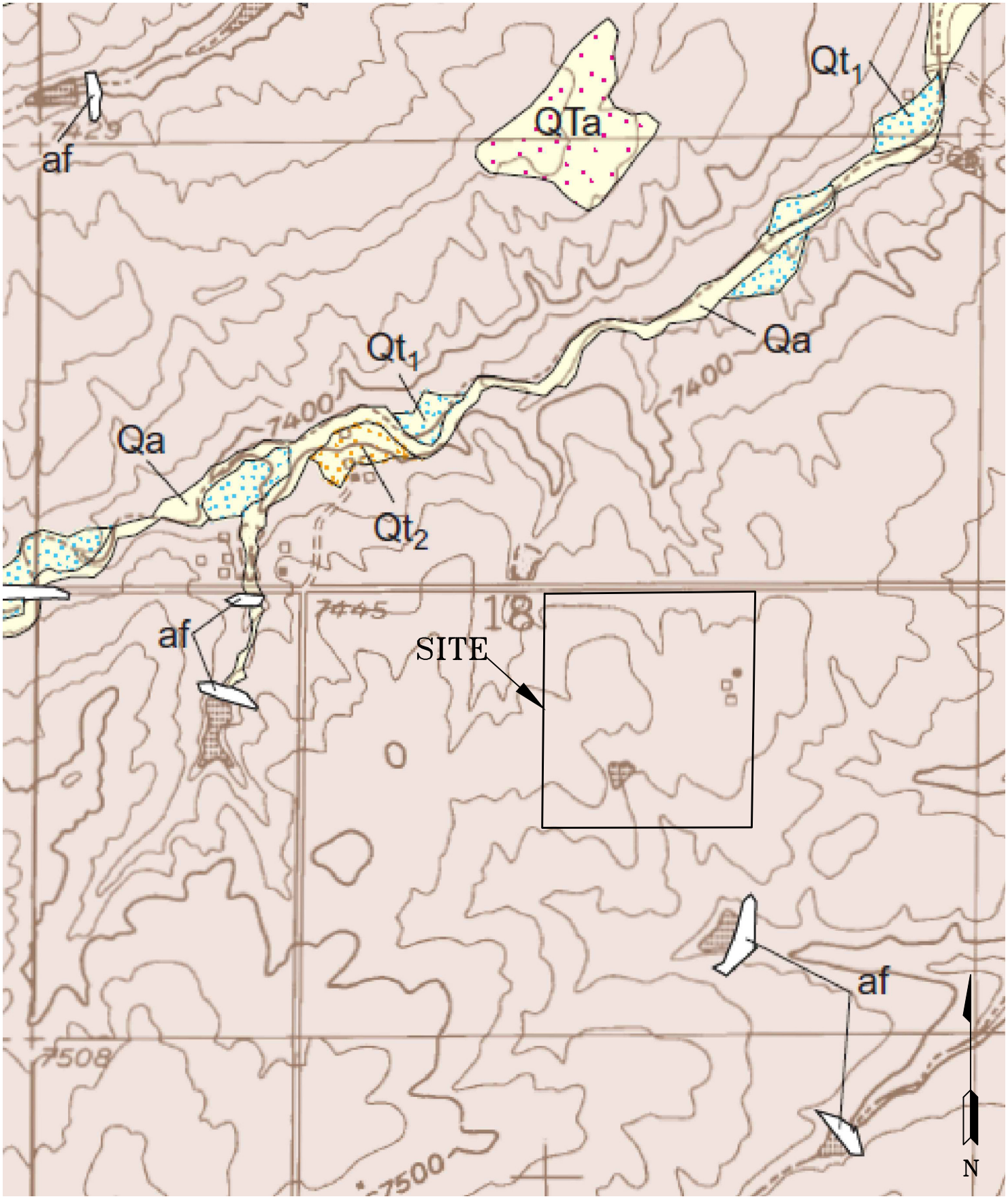

ENTECH
ENGINEERING, INC.
505 ELKTON DRIVE
COLORADO SPRINGS, CO. 80907 (719) 531-5599

BLACK FOREST QUADRANGLE GEOLOGIC MAP
6665 WALKER ROAD
COLORADO SPINGS
FOR: KURTIS BROWN
c/o TNE, INC.

DRAWN:	DATE:	CHECKED:	DATE:
JHR	12/10/21	LLL	

JOB NO.: 212979

FIG NO.: 5

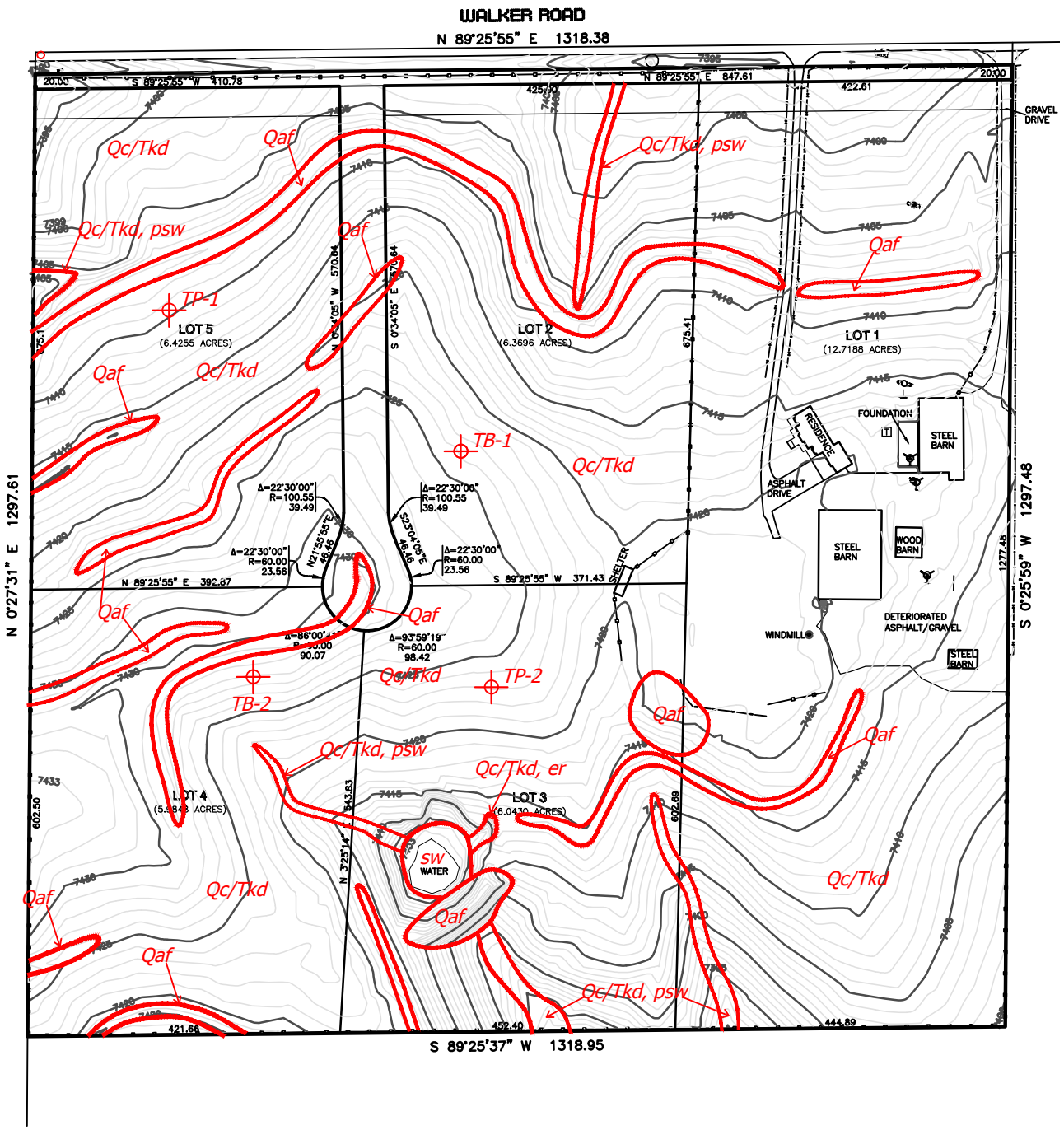

Legend:

Qaf - Artificial Fill of Holocene Age:
man made fill deposits associated with erosion berms and earthen dams

Qc/Tkd - Colluvium of Quaternary Age Overlying the Dawson Formation of Tertiary to Cretaceous Age:
Sheetwash and residual soil deposits overlying arkosic sandstone with interbedded siltstone and claystone

er - area of erosion
sw - seasonal wet area
psw - potentially seasonal shallow groundwater area

N

ENTECH ENGINEERING, INC.
505 ELKTON DRIVE
COLORADO SPRINGS, CO. 80907 (719) 531-5599

GEOLOGY/ENGINEERING GEOLOGY MAP
6665 WALKER ROAD
COLORADO SPINGS
FOR: KURTIS BROWN
c/o TNE, INC.

DRAWN:	DATE:	CHECKED:	DATE:
JHR	12/20/21	LLL	

JOB NO.: 212979

FIG NO.: 6

ENTECH
ENGINEERING, INC.
505 ELKTON DRIVE
COLORADO SPRINGS, CO. 80907 (719) 531-5599

FLOODPLAIN MAP
6665 WALKER ROAD
COLORADO SPINGS
FOR: KURTIS BROWN
FOS: c/o TNE, INC.

DRAWN:	DATE:	CHECKED:	DATE:
JHR	12/10/21	LLL	

JOB NO.: 212979

FIG NO.: 7

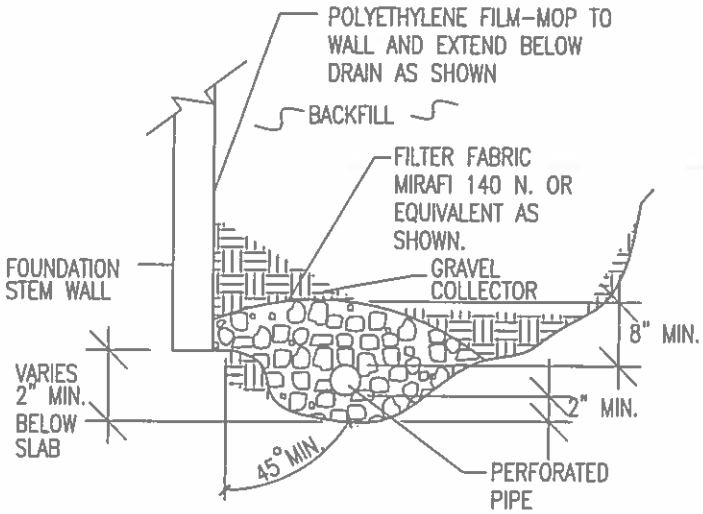

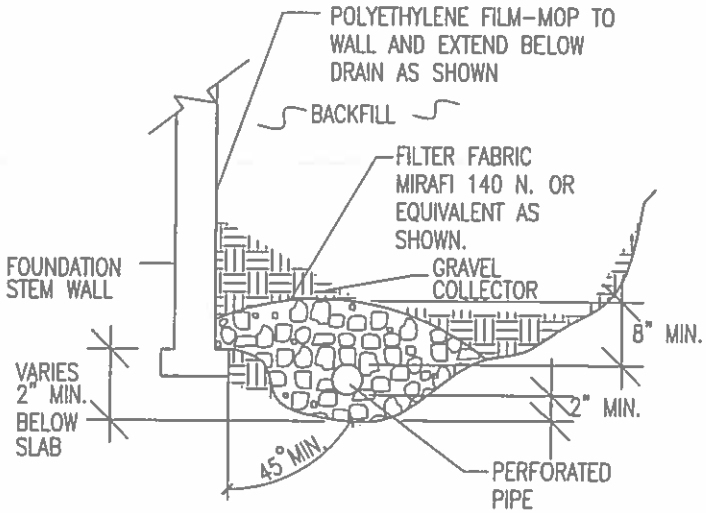

NOTES:

-GRAVEL SIZE IS RELATED TO DIAMETER OF PIPE PERFORATIONS-85% GRAVEL GREATER THAN 2x PERFORATION DIAMETER.

-PIPE DIAMETER DEPENDS UPON EXPECTED SEEPAGE. 4-INCH DIAMETER IS MOST OFTEN USED.

-ALL PIPE SHALL BE PERFORATED PLASTIC. THE DISCHARGE PORTION OF THE PIPE SHOULD BE NON-PERFORATED PIPE.

-FLEXIBLE PIPE MAY BE USED UP TO 8 FEET IN DEPTH, IF SUCH PIPE IS DESIGNED TO WITHSTAND THE PRESSURES. RIGID PLASTIC PIPE WOULD OTHERWISE BE REQUIRED.

-MINIMUM GRADE FOR DRAIN PIPE TO BE 1% OR 3 INCHES OF FALL IN 25 FEET.

-DRAIN TO BE PROVIDED WITH A FREE GRAVITY OUTFALL, IF POSSIBLE. A SUMP AND PUMP MAY BE USED IF GRAVITY OUT FALL IS NOT AVAILABLE.

ENTECH ENGINEERING, INC.
505 ELKTON DRIVE
COLORADO SPRINGS, CO. 80907 (719) 531-5599

PERIMETER DRAIN DETAIL

DRAWN:	DATE:	DESIGNED:	CHECKED:
			JHR

JOB NO.: 212979

FIG NO.: 8

APPENDIX A: Photographs

1

Looking west from the northeastern portion of the site.

November 11, 2021

2

Looking north at dry pond in south-central portion of the site.

November 11, 2021

Job No. 21297

3

Looking along crest of earthen dam in the southern portion of the site.

November 11, 2021

4

Looking southeast from Test Pit No. 1 in the northwest corner of the site.

November 11, 2021

Job No. 212979

5

Looking west from center of northern side of the site.

November 11, 2021

6

Looking northeast from central portion of site.

November 11, 2021

Job No. 212979

7

Looking west from central portion of the site.

November 11, 2021

8

Looking west from east side pond in the southern portion of the site.

November 11, 2021

Job No. 212979

APPENDIX B: Test Boring and Test Pit Logs

TEST BORING NO. 1
DATE DRILLED 12/1/2021
Job # 212979

REMARKS

DRY TO 20', 12/1/21

SILT, SANDY, TAN
SANDSTONE, SILTY, FINE TO COARSE GRAINED, TAN TO BUFF, VERY DENSE, DRY TO MOIST

Depth (ft)	Symbol	Samples	Blows per foot	Watercontent %	Soil Type
					1
			50 / 11"	1.9	2
5			50 / 8"	3.3	2
10			50 / 11"	5.4	2
15			50 / 4"	5.2	2
20			50 / 5"	7.5	2

TEST BORING NO. 2
DATE DRILLED 12/1/2021
CLIENT KURTIS BROWN
LOCATION 6665 WALKER ROAD

REMARKS

DRY TO 20', 12/1/21

SILT, VERY SANDY, BROWN, STIFF, MOIST

SANDSTONE, SILTY, FINE TO COARSE GRAINED, TAN, VERY DENSE, MOIST

Depth (ft)	Symbol	Samples	Blows per foot	Watercontent %	Soil Type
			28	5.1	1
5			50 / 8"	3.3	2
10			50 / 11"	7.5	2
15			50 / 4"	6.2	2
20			50 / 5"	6.8	2

ENTECH
ENGINEERING, INC.
505 ELKTON DRIVE
COLORADO SPRINGS, COLORADO 80907

TEST BORING LOG

DRAWN:	DATE:	CHECKED: LLL	DATE: 12/8/21

JOB NO. 212979
FIG NO. B-1

TEST PIT NO. 1
DATE EXCAVATED 11/23/2021
Job # 212979

REMARKS	Depth (ft)	Symbol	Samples	Soil Structure Shape	Soil Structure Grade	USDA Soil Type
Refusal @ 6-feet						
topsoil, 0-6 inches						
sandy clay, fine to medium grained, brown, moist			ma			4A
silty sandstone, fine to coarse grained, light brown, moist			ma			3A

TEST PIT NO. 2
DATE EXCAVATED 11/23/2021
CLIENT Kurtis Brown
LOCATION 6665 Walker Road

REMARKS	Depth (ft)	Symbol	Samples	Soil Structure Shape	Soil Structure Grade	USDA Soil Type
Redoxomorphic Features Encountered @ 2.5-feet						
topsoil, 0-10 inches						
sandy clay, fine to medium grained, brown, moist				gr	m	4
sandy clay, fine to coarse grained, light brown, moist				ma		4A
clayey sandstone, fine to coarse grained, light brown, moist				ma		4A
*signs of seasonally occuring groundwater at 2.5ft						

Soil Structure Shape
granular - gr
platy - pl
blocky - bl
prismatic - pr
single grain - sg
massive - ma

Soil Structure Grade
weak - w
moderate - m
strong - s
loose - l

ENTECH
ENGINEERING, INC.
505 ELKTON DRIVE
COLORADO SPRINGS, COLORADO 80907

TEST PIT LOG

DRAWN:	DATE:	CHECKED:	DATE:
jhr	5/26/21	LLL	12/8/21

JOB NO.: 212979
FIG NO.: B-2

APPENDIX C: Laboratory Test Results

UNIFIED CLASSIFICATION	ML	CLIENT	KURTIS BROWN
SOIL TYPE #	1	PROJECT	6665 WALKER ROAD
TEST BORING #	2	JOB NO.	212979
DEPTH (FT)	2-3	TEST BY	BL

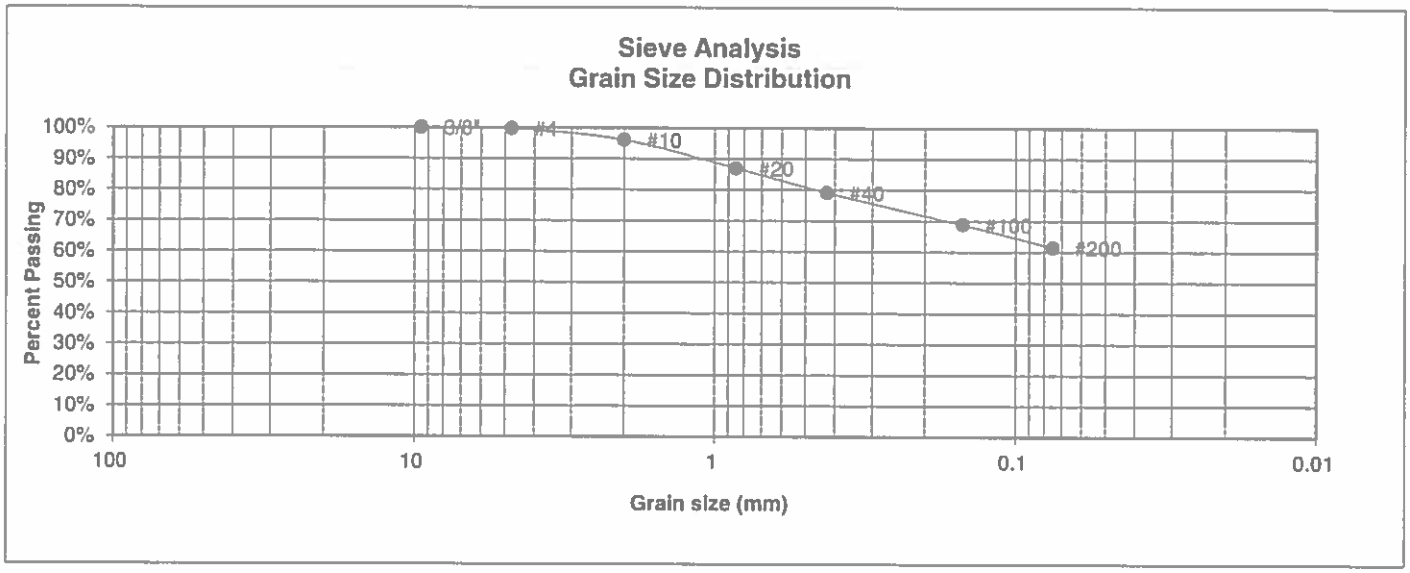

U.S. Sieve #	Percent Finer
3"	
1 1/2"	
3/4"	
1/2"	
3/8"	100.0%
4	99.7%
10	96.1%
20	86.9%
40	79.1%
100	68.8%
200	61.4%

Atterberg Limits

Plastic Limit

Liquid Limit

Plastic Index

Swell

Moisture at start

Moisture at finish

Moisture increase

Initial dry density (pcf)

Swell (psf)

ENTECH ENGINEERING, INC.
505 ELKTON DRIVE
COLORADO SPRINGS, COLORADO 80907

LABORATORY TEST RESULTS

DRAWN:	DATE:	CHECKED: LLL	DATE: 12/8/21

JOB NO.: 212979

FIG NO.: C-1

UNIFIED CLASSIFICATION	SM	CLIENT	KURTIS BROWN
SOIL TYPE #	2	PROJECT	6665 WALKER ROAD
TEST BORING #	1	JOB NO.	212979
DEPTH (FT)	5	TEST BY	BL

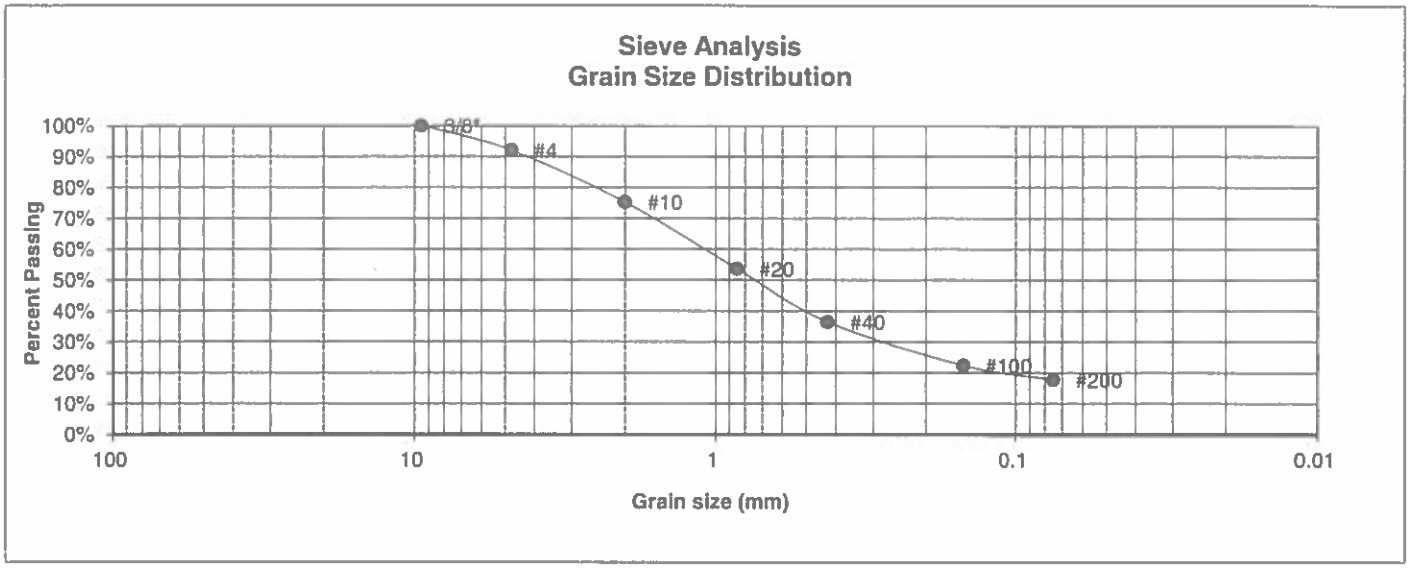

U.S. Sieve #	Percent Finer
3"	
1 1/2"	
3/4"	
1/2"	
3/8"	100.0%
4	92.0%
10	75.2%
20	53.7%
40	36.4%
100	22.3%
200	17.8%

Atterberg Limits	
Plastic Limit	NP
Liquid Limit	NV
Plastic Index	NP

Swell	
Moisture at start	
Moisture at finish	
Moisture increase	
Initial dry density (pcf)	
Swell (psf)	

ENTECH
ENGINEERING, INC.
505 ELKTON DRIVE
COLORADO SPRINGS, COLORADO 80907

LABORATORY TEST RESULTS

DRAWN	DATE	CHECKED	DATE
		LLL	12/8/21

JOB NO. 212979

FIG NO. C-2

UNIFIED CLASSIFICATION	SM	CLIENT	KURTIS BROWN
SOIL TYPE #	2	PROJECT	6665 WALKER ROAD
TEST BORING #	2	JOB NO.	212979
DEPTH (FT)	15	TEST BY	BL

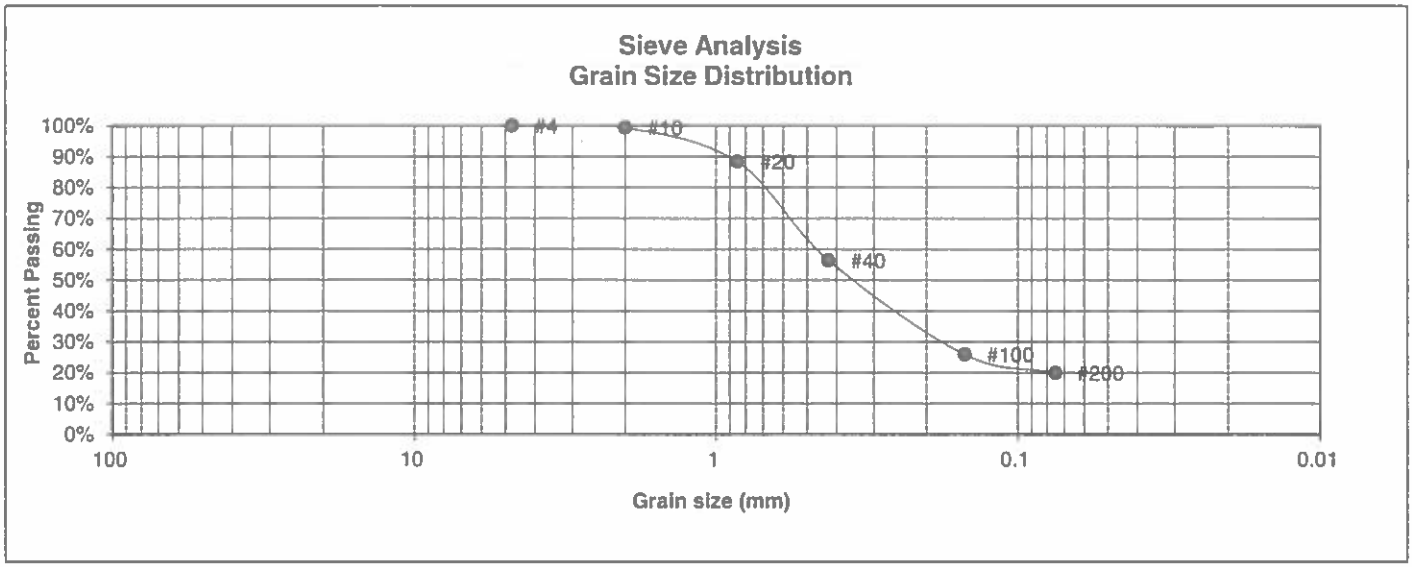

U.S. Sieve #	Percent Finer
3"	
1 1/2"	
3/4"	
1/2"	
3/8"	
4	100.0%
10	99.4%
20	88.4%
40	56.4%
100	25.9%
200	19.9%

Atterberg Limits

Plastic Limit

Liquid Limit

Plastic Index

Swell

Moisture at start

Moisture at finish

Moisture increase

Initial dry density (pcf)

Swell (psf)

ENTECH ENGINEERING, INC.
505 ELKTON DRIVE
COLORADO SPRINGS, COLORADO 80907

LABORATORY TEST RESULTS

DRAWN:	DATE:	CHECKED: LLL	DATE: 12/8/21

JOB NO. 212979

FIG NO. C-3

APPENDIX D: Soil Survey Descriptions

El Paso County Area, Colorado

67—Peyton sandy loam, 5 to 9 percent slopes

Map Unit Setting

National map unit symbol: 369d
Elevation: 6,800 to 7,600 feet
Mean annual air temperature: 43 to 45 degrees F
Frost-free period: 115 to 125 days
Farmland classification: Not prime farmland

Map Unit Composition

Peyton and similar soils: 85 percent
Estimates are based on observations, descriptions, and transects of the mapunit.

Description of Peyton

Setting

Landform: Hills
Landform position (three-dimensional): Side slope
Down-slope shape: Linear
Across-slope shape: Linear
Parent material: Arkosic alluvium derived from sedimentary rock and/or arkosic residuum weathered from sedimentary rock

Typical profile

A - 0 to 12 inches: sandy loam
Bt - 12 to 25 inches: sandy clay loam
BC - 25 to 35 inches: sandy loam
C - 35 to 60 inches: sandy loam

Properties and qualities

Slope: 5 to 9 percent
Depth to restrictive feature: More than 80 inches
Drainage class: Well drained
Runoff class: Medium
Capacity of the most limiting layer to transmit water (Ksat): Moderately high (0.20 to 0.60 in/hr)
Depth to water table: More than 80 inches
Frequency of flooding: None
Frequency of ponding: None
Available water supply, 0 to 60 inches: Moderate (about 7.3 inches)

Interpretive groups

Land capability classification (irrigated): None specified
Land capability classification (nonirrigated): 4e
Hydrologic Soil Group: B
Ecological site: R049XY216CO - Sandy Divide
Hydric soil rating: No

Minor Components

Pleasant

Percent of map unit:
Landform: Depressions
Hydric soil rating: Yes

Other soils

Percent of map unit:
Hydric soil rating: No

69—Peyton-Pring complex, 8 to 15 percent slopes

Map Unit Setting

National map unit symbol: 369g
Elevation: 6,800 to 7,600 feet
Farmland classification: Not prime farmland

Map Unit Composition

Peyton and similar soils: 40 percent
Pring and similar soils: 30 percent
Estimates are based on observations, descriptions, and transects of the mapunit.

Description of Peyton

Setting

Landform: Hills
Landform position (three-dimensional): Side slope
Down-slope shape: Linear
Across-slope shape: Linear
Parent material: Arkosic alluvium derived from sedimentary rock and/or arkosic residuum weathered from sedimentary rock

Typical profile

A - 0 to 12 inches: sandy loam
Bt - 12 to 25 inches: sandy clay loam
BC - 25 to 35 inches: sandy clay loam
C - 35 to 60 inches: sandy loam

Properties and qualities

Slope: 8 to 9 percent
Depth to restrictive feature: More than 80 inches
Drainage class: Well drained
Runoff class: Medium
Capacity of the most limiting layer to transmit water (Ksat): Moderately high (0.20 to 0.60 in/hr)
Depth to water table: More than 80 inches
Frequency of flooding: None
Frequency of ponding: None
Available water supply, 0 to 60 inches: Moderate (about 7.3 inches)

Interpretive groups

Land capability classification (irrigated): None specified
Land capability classification (nonirrigated): 4e
Hydrologic Soil Group: B
Ecological site: R049XY216CO - Sandy Divide
Hydric soil rating: No

Description of Pring

Setting

Landform: Hills
Landform position (three-dimensional): Side slope
Down-slope shape: Linear
Across-slope shape: Linear
Parent material: Arkosic alluvium derived from sedimentary rock

Typical profile

A - 0 to 14 inches: coarse sandy loam
C - 14 to 60 inches: gravelly sandy loam

Properties and qualities

Slope: 8 to 15 percent
Depth to restrictive feature: More than 80 inches
Drainage class: Well drained
Runoff class: Low
Capacity of the most limiting layer to transmit water (Ksat): High (2.00 to 6.00 in/hr)
Depth to water table: More than 80 inches
Frequency of flooding: None
Frequency of ponding: None
Available water supply, 0 to 60 inches: Low (about 6.0 inches)

Interpretive groups

Land capability classification (irrigated): None specified
Land capability classification (nonirrigated): 6e
Hydrologic Soil Group: B
Ecological site: R048AY222CO - Loamy Park
Hydric soil rating: No

Minor Components

Pleasant

Percent of map unit:
Landform: Depressions
Hydric soil rating: Yes

Other soils

Percent of map unit:
Hydric soil rating: No