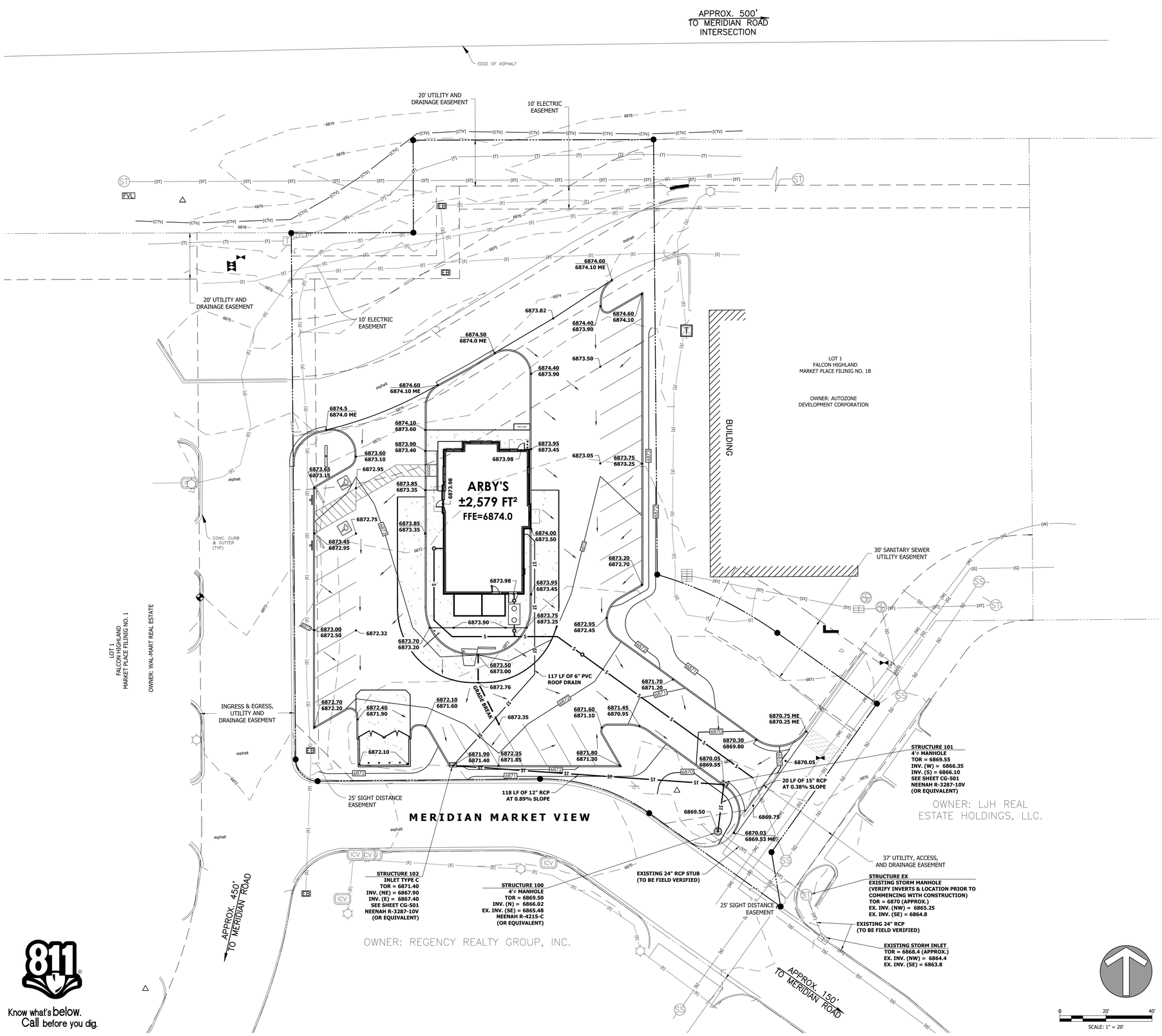

LEGEND OF EXISTING FEATURES

	PROPERTY LINE		BENCHMARK
	RIGHT-OF-WAY LINE	RBC	MONUMENT
	SETBACK LINE		SECTION CORNER
	EASEMENT	ET / HC	TRANSFORMER / HVAC
	SECTION LINE	E(M) / E	ELECTRIC METER / ELECTRIC MANHOLE
	CENTERLINE		POWER POLE | GUY WIRE
799	INTERMEDIATE CONTOUR		LIGHT POLE
800	INDEX CONTOUR		TELEPHONE PEDESTAL / TELEPHONE MANHOLE
[T]	TELEPHONE UNDER GR.	G / E	GAS MARKER / ELECTRIC MARKER
[OH-T]	TELEPHONE OVERHEAD	TR / TR	TRAFFIC POLE / TRAFFIC MANHOLE
[FO]	FIBER OPTIC SERVICE	G(M) / G	GAS METER / GAS VALVE
[G]	GAS SERVICE	ST / S	STORM MANHOLE / SANITARY MANHOLE
[E]	POWER UNDERGROUND		STORM INLETS
[OH-E]	POWER OVERHEAD	C.O. / D.S.	CLEAN-OUT / DOWNSPOUT
[W]	WATER SERVICE		FIRE HYDRANTS
[S]	SANITARY SEWER	W(M) / W	WATER METER / WATER VALVES
[ST]	STORM SEWER		POST INDICATOR VALVE / FIRE DEPARTMENT CONN.
[NP]	POND NORMAL POOL		SIGNS
	EX. FLOWLINE		MAILBOX
	CHAIN LINK FENCE		ADA PARKING
	FARM FENCE	24	PARKING COUNT
	WOOD FENCE		TREES
	IRON FENCE | RAILING		SHRUB
	BUILDING | STRUCTURE		
	EX. BUILDING OVERHEAD	× 801.55	SPOT GRADE
RIM	RIM ELEVATION		
INV.	INVERT ELEVATION		
FFE	FINISHED FLOOR ELEVATION		

GRADING PLAN LEGEND

ST	STORM SEWER	RIM	RIM ELEVATION
SSD	SUBSURFACE DRAIN	INV.	INVERT ELEVATION
	SWALE | FLOWLINE	FFE	FINISHED FLOOR ELEVATION
NP	POND (NORMAL POOL)		FLOW ARROW
799	INTERMEDIATE CONTOUR	ST	STORM MANHOLE
800	INDEX CONTOUR		STORM INLETS
800.00 ME	MATCH EXISTING		STORM ENDSECTION
800.00	PAVEMENT SPOT GRADE	C.O.	CLEAN-OUT
800.4	GROUND SPOT GRADE	D.S.	DOWNSPOUT
800.00 / 800.50	TOP OF CURB / BOTTOM OF CURB		
800.00 TW / 800.50 BW	TOP OF WALL / BOTTOM OF WALL		

REVISION BLOCK

COLORADO LICENSED
MICHAEL A. THOMPSON II
0057768
PROFESSIONAL ENGINEER

Michael Thompson

DATE
10/21/2020

DRAWN BY
KPB

CHECKED BY
AMT

HAMILTON DESIGNS
A LIMITED LIABILITY COMPANY
11Municipal Drive, Suite 300
Fishers, Indiana 46038
P. (317) 570-8800
www.hamilton-designs.com

CONSTRUCTION PLANS FOR:
ARBY'S I FALCON, CO
11775 Meridian Market View
Falcon, Colorado 80831

BELL AMERICAN GROUP, LLC
8930 Bash Street, Suite L
Indianapolis, Indiana 46256

PROJECT NO.
2019-0246

DATE
10/21/2020

SCALE
1" = 20'

SHEET NAME
GRADING PLAN

SHEET NO.
CG-101

Know what's below.
Call before you dig.

p:\2019\0246 - bell american group - falcon, co\drawings\cg-101.dwg

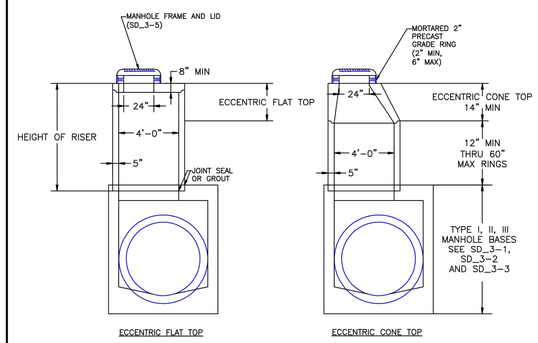

NOTES

1. ALL WORK SHALL BE DONE IN ACCORDANCE WITH THE STANDARD AND SUPPLEMENTAL SPECIFICATIONS APPLICABLE TO THE PROJECT.
2. PRECAST RISERS SHALL CONFORM TO ASTM C478.
3 STEPS SHALL BE INSTALLED WHEN MANHOLE DEPTH EXCEEDS 30". STEPS SHALL BE CAST IRON OR EXTRUDED ALUMINUM, 1000 LB CAPACITY, 12" WIDE WITH NON-SKID GROOVES AND DROP FRONT ON SAFETY NOSES, IN ACCORDANCE WITH APPROVED OSHA REQUIREMENTS.

SCALE: NOT TO SCALE

8/11/11 DATE APPROVED: André P. Brackin DEPARTMENT OF TRANSPORTATION	Storm Sewer Manhole Riser and Cover Detail Standard Drawing REVISION DATE: 11/23/04 FILE NAME: SD_3-7	EL PASO COUNTY DEPARTMENT OF TRANSPORTATION

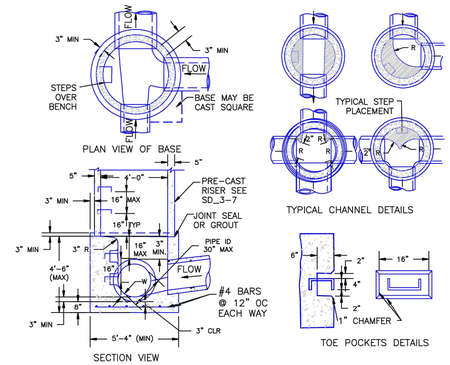

NOTES

1. TYPE II MANHOLES SHALL BE USED WHEN APPROPRIATE AND TYPICALLY WHEN THE PIPE SIZES ARE 30" OR LESS INSIDE DIAMETER.

2. VIEW AND DETAILS ARE TYPICAL. DESIGN ENGINEER SHALL DETERMINE MANHOLE BASE CONFIGURATION AND DIMENSIONS FOR PARTICULAR PIPE SIZES AND ALIGNMENT.

3. EITHER LADDER OF STEPS SHALL BE INSTALLED WHEN MANHOLE DEPTH EXCEEDS 30". STEPS IN BASE SHALL BE INSTALLED IN "TOE POCKETS" (SEE DETAIL THIS SHEET). LOWEST STEP SHALL BE A MAXIMUM OF 16" ABOVE THE FLOOR.

4. PIPES SHALL BE TRIMMED TO FINAL SHAPE AND SET BEFORE MANHOLE IS POURED.

5. BENCH SHALL BE SLOPED TOWARD CENTER OF MANHOLE BASE (4:1 MAX., ½" PER FOOT. MIN.).

6. FLOOR OF MANHOLE SHALL BE TROWELLED TO A SMOOTH, HARD SURFACE AND SHALL SLOPE TOWARDS THE OUTLET (8:1., ½" PER FT. MIN.) . FLOOR SHALL BE SHAPED AND CHANNELED; SEE DETAILS THIS SHEET.

SCALE: NOT TO SCALE

DATE APPROVED: André P. Brackin DEPARTMENT OF TRANSPORTATION	Storm Sewer Manhole Detail Type II Standard Drawing REVISION DATE: 11/10/04 FILE NAME: SD_3-2	EL PASO COUNTY DEPARTMENT OF TRANSPORTATION

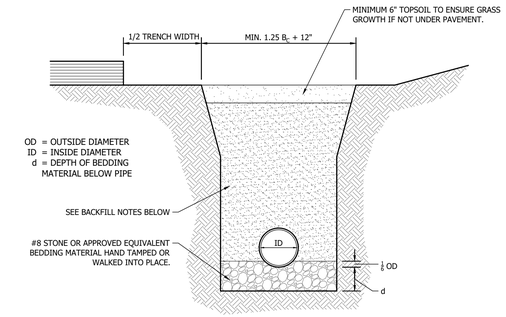

DEPTH OF BEDDING MATERIAL BELOW PIPE

ID	d (MIN)
27" & SMALLER	3"
30" TO 60"	4"
66" & LARGER	6"

BACKFILL NOTES:

1. IF WITHIN 5' OF EDGE OF PAVEMENT, USE "B" BORROW OR EQUIVALENT GRANULAR MATERIAL COMPACTED TO 95% STANDARD PROCTOR DENSITY FOR ENTIRE TRENCH BACKFILL.
2. IF NOT WITHIN 5' OF EDGE OF PAVEMENT, USE "B" BORROW COMPACTED TO 90% STANDARD PROCTOR DENSITY TO ½ OF PIPE DIAMETER AND REGULAR BACKFILL TO TOP OF TRENCH..
3. ALL BEDDING & INITIAL BACKFILL SHALL BE INSTALLED IN 6" TO 12" BALANCED LIFTS.
4. A MINIMUM 9" OF CLEARANCE SHALL BE PROVIDED ON EACH SIDE OF THE INSTALLED PIPE.

REINFORCED CONCRETE PIPE (RCP) BEDDING/TRENCH DETAIL

NOT TO SCALE

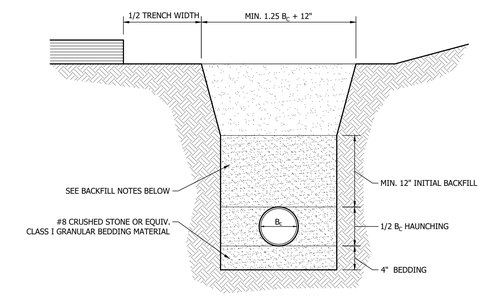

BACKFILL NOTES:

1. WHERE PIPE IS DIRECTLY BENEATH OR WITHIN 5 FEET OF PAVEMENT AREAS, FINAL BACKFILL SHOULD CONSIST OF COMPACTED #53 AGGREGATE PLACED FROM 12" ABOVE THE TOP OF PIPE TO THE PAVEMENT BASE.
2. OUTSIDE PAVEMENT AREAS, NATIVE MATERIAL SHALL BE USED AND COMPACTED TO PREVENT SETTLEMENT. NATIVE MATERIAL TO BE CLEAN FILL MATERIAL AND FREE OF ROCKS 6" IN DIAMETER AND LARGER.
3. ALL PIPE SYSTEMS SHALL BE INSTALLED IN ACCORDANCE WITH ASTM D231, "STANDARD PRACTICE FOR UNDERGROUND INSTALLATION OF THERMOPLASTIC PIPE FOR SEWERS AND OTHER GRAVITY FLOW APPLICATIONS", LATEST EDITION.
4. ALL BEDDING & INITIAL BACKFILL SHALL BE INSTALLED IN 6" TO 12" BALANCED LIFTS. BEDDING MATERIAL SHALL BE HAND PLACED AROUND THE HAUNCH & SIDES OF THE PIPE TO ENSURE PROPER COMPACTION & COMPLETE FILING OF ALL VOIDS.

FLEXIBLE PIPE BEDDING DETAIL

NOT TO SCALE

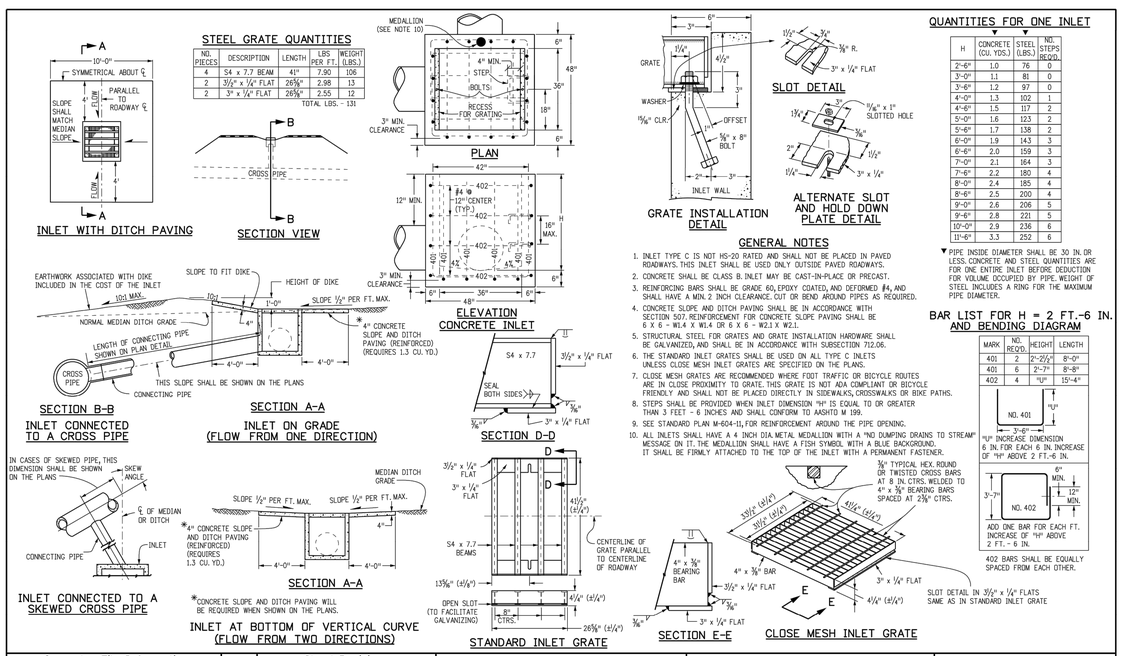

STEEL GRATE QUANTITIES

NO. PIECES	DESCRIPTION	LENGTH	LBS PER FT.	WEIGHT (LBS.)
4	S4 x 7.7 BEAM	41"	7.90	106
2	3½" x ¼" FLAT	26⅝"	2.98	13
2	3" x ¼" FLAT	26⅝"	2.55	12
		TOTAL LBS. - 131		

QUANTITIES FOR ONE INLET

H	CONCRETE (CU. YDS.)	STEEL (LBS.)	NO. STEPS REQ'D.
2'-6"	1.0	76	0
3'-0"	1.1	81	0
3'-6"	1.2	97	0
4'-0"	1.3	102	1
4'-6"	1.5	117	2
5'-0"	1.6	123	2
5'-6"	1.7	138	2
6'-0"	1.9	143	3
6'-6"	2.0	159	3
7'-0"	2.1	164	3
7'-6"	2.2	180	4
8'-0"	2.4	185	4
8'-6"	2.5	200	4
9'-0"	2.6	206	5
9'-6"	2.8	221	5
10'-0"	2.9	236	6
11'-6"	3.3	252	6

▼ PIPE INSIDE DIAMETER SHALL BE 30 IN. OR LESS. CONCRETE AND STEEL QUANTITIES ARE FOR ONE ENTIRE INLET BEFORE DEDUCTION FOR VOLUME OCCUPIED BY PIPE. WEIGHT OF STEEL INCLUDES A RING FOR THE MAXIMUM PIPE DIAMETER.

BAR LIST FOR H = 2 FT.-6 IN. AND BENDING DIAGRAM

MARK	NO. REQ'D.	HEIGHT	LENGTH
401	2	2'-2½"	8'-0"
401	6	2'-7"	8'-8"
402	4	"U"	15'-4"

"U" INCREASE DIMENSION 6 IN. FOR EACH 6 IN. INCREASE OF "H" ABOVE 2 FT.-6 IN.

ADD ONE BAR FOR EACH FT. INCREASE OF "H" ABOVE 2 FT. - 6 IN.

402 BARS SHALL BE EQUALLY SPACED FROM EACH OTHER.

GENERAL NOTES

1. INLET TYPE C IS NOT HS-20 RATED AND SHALL NOT BE PLACED IN PAVED ROADWAYS. THIS INLET SHALL BE USED ONLY OUTSIDE PAVED ROADWAYS.
2. CONCRETE SHALL BE CLASS B. INLET MAY BE CAST-IN-PLACE OR PRECAST.
3. REINFORCING BARS SHALL BE GRADE 60, EPOXY COATED, AND DEFORMED #4, AND SHALL HAVE A MIN. 2 INCH CLEARANCE. CUT OR BEND AROUND PIPES AS REQUIRED.
4. CONCRETE SLOPE AND DITCH PAVING SHALL BE IN ACCORDANCE WITH SECTION 507. REINFORCEMENT FOR CONCRETE SLOPE PAVING SHALL BE 6 X 6 - W1.4 X W1.4 OR 6 X 6 - W2.1 X W2.1.
5. STRUCTURAL STEEL FOR GRATES AND GRATE INSTALLATION HARDWARE SHALL BE GALVANIZED, AND SHALL BE IN ACCORDANCE WITH SUBSECTION 712.06.
6. THE STANDARD INLET GRATES SHALL BE USED ON ALL TYPE C INLETS UNLESS CLOSE MESH INLET GRATES ARE SPECIFIED ON THE PLANS.
7. CLOSE MESH GRATES ARE RECOMMENDED WHERE FOOT TRAFFIC OR BICYCLE ROUTES ARE IN CLOSE PROXIMITY TO GRATE. THIS GRATE IS NOT ADA COMPLIANT OR BICYCLE FRIENDLY AND SHALL NOT BE PLACED DIRECTLY IN SIDEWALKS, CROSSWALKS OR BIKE PATHS.
8. STEPS SHALL BE PROVIDED WHEN INLET DIMENSION "H" IS EQUAL TO OR GREATER THAN 3 FEET - 6 INCHES AND SHALL CONFORM TO AASHTO M 199.
9. SEE STANDARD PLAN M-604-11, FOR REINFORCEMENT AROUND THE PIPE OPENING.
10. ALL INLETS SHALL HAVE A 4 INCH DIA. METAL MEDALLION WITH A "NO DUMPING DRAINS TO STREAM" MESSAGE ON IT. THE MEDALLION SHALL HAVE A FISH SYMBOL WITH A BLUE BACKGROUND. IT SHALL BE FIRMLY ATTACHED TO THE TOP OF THE INLET WITH A PERMANENT FASTENER.

Computer File Information		Sheet Revisions	
Creation Date: 07/31/19		Date:	Comments
Designer Initials: JBK	(R-X)		
Last Modification Date: 07/31/19	(R-X)		
Detailer Initials: LTA	(R-X)		
CAD Ver.: MicroStation V8 Scale: Not to Scale Units: English	(R-X)		

Colorado Department of Transportation
2829 West Howard Place
CDOT HQ, 3rd Floor
Denver, CO 80204
Phone: 303-757-9021 FAX: 303-757-9868
Project Development Branch JBK

INLET, TYPE C

STANDARD PLAN NO.
M-604-10
Standard Sheet No. 1 of 1
Issued by the Project Development Branch: July 31, 2019
Project Sheet Number:

REVISION BLOCK

COLORADO LICENSED MICHAEL A. THOMPSON 0057768 PROFESSIONAL ENGINEER

Michael Thompson

DATE 10/21/2020

DRAWN BY KPB | CHECKED BY AMT

HAMILTON DESIGNS
A LIMITED LIABILITY COMPANY
11Municipal Drive, Suite 300
Fishers, Indiana 46038
P. (317) 570-8800
www.hamilton-designs.com

CONSTRUCTION PLANS FOR:
ARBY'S I FALCON, CO
11775 Meridian Market View
Falcon, Colorado 80831

BELL AMERICAN GROUP, LLC
8930 Bash Street, Suite L
Indianapolis, Indiana 46256

PROJECT NO. 2019-0246

DATE 10/21/2020

SCALE

SHEET NAME
GRADING DETAILS

SHEET NO.
CG-501

p:\2019\0246 - bell american group - falcon, co\drawings\cg-501.dwg

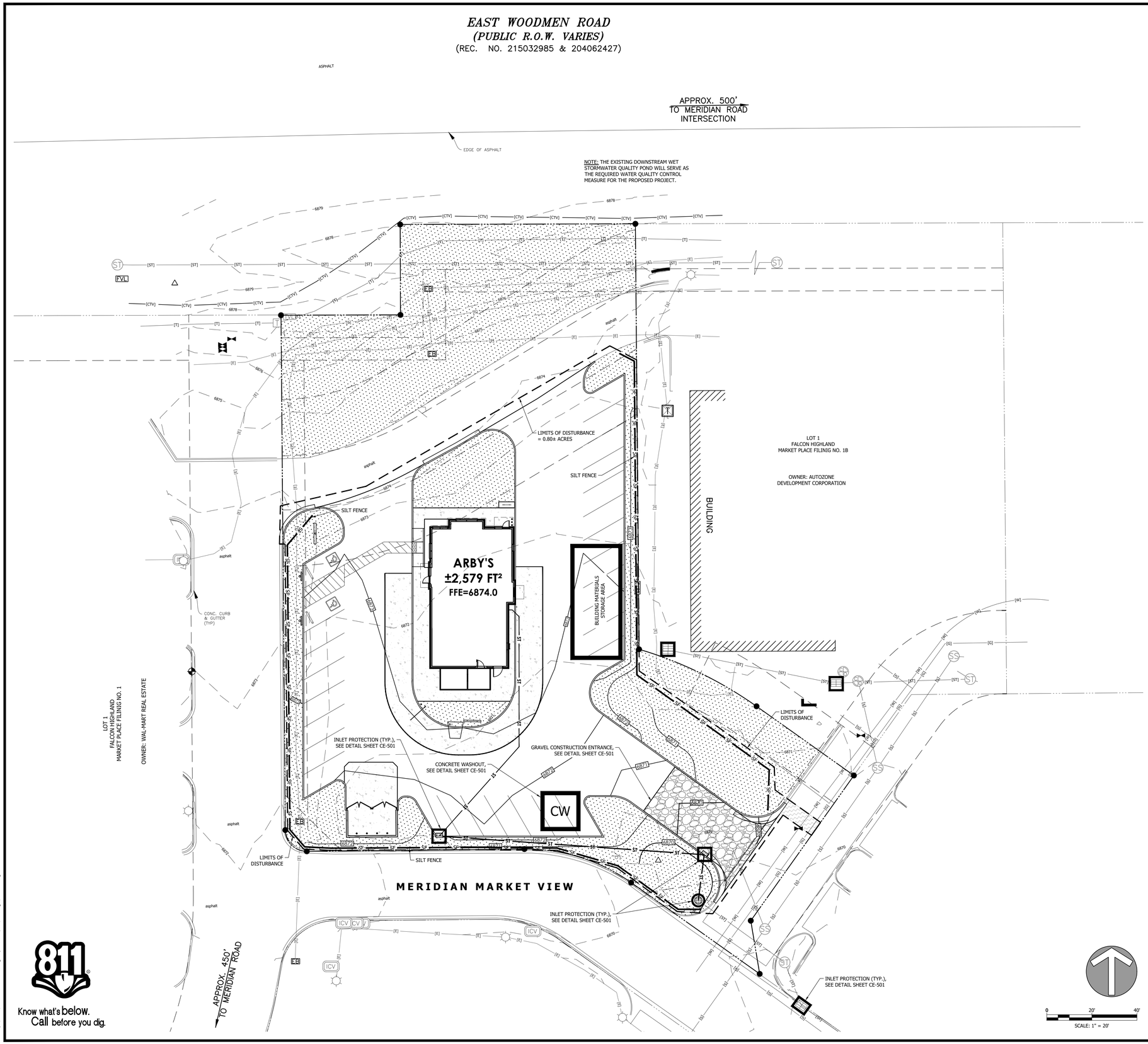

Know what's below. Call before you dig.

LEGEND OF EXISTING FEATURES

	PROPERTY LINE		BENCHMARK
	RIGHT-OF-WAY LINE	RBC	MONUMENT
	SETBACK LINE		SECTION CORNER
	EASEMENT	ET HC	TRANSFORMER HVAC
	SECTION LINE	E(H) E	ELECTRIC METER ELECTRIC MANHOLE
	CENTERLINE		POWER POLE | GUY WIRE
799	INTERMEDIATE CONTOUR		LIGHT POLE
800	INDEX CONTOUR		TELEPHONE PEDESTAL TELEPHONE MANHOLE
[T]	TELEPHONE UNDER GR.	G E	GAS MARKER ELECTRIC MARKER
[OH-T]	TELEPHONE OVERHEAD	TR	TRAFFIC POLE TRAFFIC MANHOLE
[FO]	FIBER OPTIC SERVICE	G(H) G	GAS METER GAS VALVE
[G]	GAS SERVICE	ST S	STORM MANHOLE SANITARY MANHOLE
[E]	POWER UNDERGROUND		STORM INLETS
[OH-E]	POWER OVERHEAD	C.O. D.S.	CLEAN-OUT DOWNSPOUT
[W]	WATER SERVICE		FIRE HYDRANTS
[S]	SANITARY SEWER	W(H) W	WATER METER WATER VALVES
[ST]	STORM SEWER		POST INDICATOR VALVE FIRE DEPARTMENT CONN.
[NP]	POND NORMAL POOL		SIGNS
	EX. FLOWLINE		MAILBOX
	CHAIN LINK FENCE		ADA PARKING
	FARM FENCE	24	PARKING COUNT
	WOOD FENCE		TREES
	IRON FENCE | RAILING		SHRUB
	BUILDING | STRUCTURE		
	EX. BUILDING OVERHEAD	+ 6815	SPOT GRADE
RIM	RIM ELEVATION		
INV.	INVERT ELEVATION		
FFE	FINISHED FLOOR ELEVATION		

STORMWATER POLLUTION PREVENTION PLAN LEGEND

PROPOSED SEEDING	CE-501
EROSION CONTROL MATTING	CE-501
RIPRAP OUTLET PROTECTION	CE-501
GRAVEL CONSTRUCTION ENTRANCE	CE-501

	CONSTRUCTION LIMITS	CW	CONCRETE WASHOUT
SF	SILT FENCE		INLET PROTECTION
ST	STORM SEWER	ST	STORM MANHOLE
SSD	SUBSURFACE DRAIN		STORM INLETS
	SWALE | FLOWLINE		INVERT ELEVATION
799	INTERMEDIATE CONTOUR	C.O.	CLEAN-OUT
800	INDEX CONTOUR	D.S.	DOWNSPOUT
	FLOW ARROW		

CONSTRUCTION SEQUENCE

PRE-CONSTRUCTION ACTIVITIES:

1. CALL 811 SERVICE AT 811 TO CHECK THE LOCATION OF ANY EXISTING UTILITIES. THEY SHOULD BE NOTIFIED TWO WORKING DAYS BEFORE CONSTRUCTION TAKES PLACE.
2. A SILT FENCE SHALL BE INSTALLED AT THE EDGES OF THE PROJECT SITE WHERE THERE IS POTENTIAL FOR ANY STORMWATER RUNOFF. POTENTIAL AREAS ARE IDENTIFIED BASED ON EXISTING TOPOGRAPHY AND SHOWN ON SHEET CE-101. THE INSTALLED SILT FENCE SHOULD BE INSPECTED AND ANY ACCUMULATING SEDIMENT REMOVED.
3. EVALUATE EXISTING VEGETATION SUITABLE FOR USE AS FILTER STRIPS ALONG THE PROPERTY BOUNDARIES.
4. A CONSTRUCTION ENTRANCE SHALL BE PLACED AS SHOWN ON SHEET CE-101.
5. ESTABLISH CONSTRUCTION STAGING AREA FOR EQUIPMENT AND VEHICLES AS FAR FROM INLETS AND SWALES AS POSSIBLE.
6. ESTABLISH ONSITE LOCATION FOR OWNER/OPERATOR/CONTRACTOR PLACEMENT OF APPROVED PLANS AND INSPECTION DOCUMENTATION.

CONSTRUCTION ACTIVITIES:

1. ONCE EROSION AND SEDIMENT CONTROL MEASURES ARE IN PLACE, BEGIN LAND CLEARING FOLLOWED IMMEDIATELY BY ROUGH GRADING. DO NOT LEAVE LARGE AREAS UNPROTECTED FOR MORE THAN 14 DAYS. ALL DISTURBED AREAS THAT POTENTIALLY WILL BE IDLE FOR 14 DAYS OR MORE WILL BE STABILIZED (SEEDED, MULCHED, ETC..) IMMEDIATELY.
2. AFTER COMPLETION OF MASS GRADING, FINAL GRADE AND SEED LANDSCAPE BERMS, AND SWALES IMMEDIATELY AFTER GRADING IS COMPLETED.
3. UPON COMPLETION OF MASS GRADING, INSTALL SANITARY AND STORM SEWERS. AS STORM SEWERS ARE CONSTRUCTED, INSTALL INLET PROTECTION MEASURES. INSTALL RIPRAP UPON COMPLETION OF END SECTION INSTALLATION.
4. UPON COMPLETION OF SEWER INSTALLATION AND INLET PROTECTION, PROCEED WITH ASPHALT PAVEMENT CONSTRUCTION.
5. AS NECESSARY, LIMING OF ASPHALT PARKING SHOULD BE DONE PRIOR TO THE INSTALLATION OF STORM SEWERS TO PREVENT THE TRANSMISSION OF LIME DUST TO PONDS OR RECEIVING WATERS.
6. CONTRACTOR SHALL MAINTAIN EROSION CONTROL MEASURES AND DEVICES DURING THE CONSTRUCTION PHASE AND UNTIL SILTATION OF THE STREETS AND STORM SEWERS WILL NO LONGER OCCUR.
7. AFTER ALL DISTURBED AREAS HAVE BEEN STABILIZED, REMOVE ACCUMULATED SEDIMENT FROM INSTALLED EROSION CONTROL FEATURES.
8. WHEN 70% OF VEGETATIVE COVER IS OBTAINED THE CONTRACTOR SHALL REMOVE ALL TEMPORARY EROSION AND SEDIMENT CONTROL MEASURES.

REVISION BLOCK

COLORADO LICENSED
MICHAEL A. THOMPSON II
0057768
PROFESSIONAL ENGINEER

Michael Thompson

DATE
10/21/2020

DRAWN BY
KPB

CHECKED BY
AMT

HAMILTON DESIGNS
A LIMITED LIABILITY COMPANY
11Municipal Drive, Suite 300
Fishers, Indiana 46038
P. (317) 570-8800
www.hamilton-designs.com

CONSTRUCTION PLANS FOR:
ARBY'S I FALCON, CO
11775 Meridian Market View
Falcon, Colorado 80831

BELL AMERICAN GROUP, LLC
8930 Bash Street, Suite L
Indianapolis, Indiana 46256

PROJECT NO.
2019-0246

DATE
10/21/2020

SCALE
1" = 20'

SHEET NAME
STORMWATER POLL. PREVENTION PLAN

SHEET NO.
CE-101

p:\2019\0246 - bell american group - falcon, co\drawings\ce-101.dwg

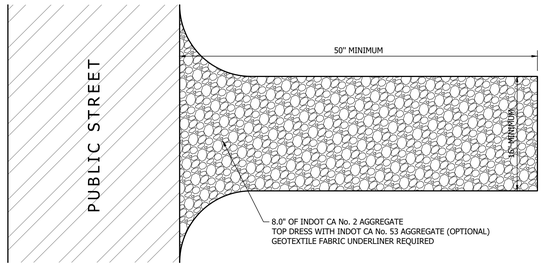

1. ADAPTED FROM THE INDIANA DEPARTMENT OF ENVIRONMENTAL MANAGEMENT - INDIANA STORMWATER QUALITY MANUAL, 2007

GRAVEL CONSTRUCTION ENTRANCE

NOT TO SCALE

SILT FENCE JOINT WRAP DETAIL

Silt Fence shall be a machine produced, woven geotextile fabric. All stakes shall be 1 1/4" X 1 1/4" hardwood 36" tall with 24" tall lath stapled to stakes over fabric as reinforcement.

Textile Strength @ 20% elongation ..... 30 lbs. per linear inch
UV Resistance .....>70%
Filtering Efficiency 85%
Slurry Flow Rate .....0.3 gpm/ft^2
Water Flow Rate ..... 15 gpm/ft^2

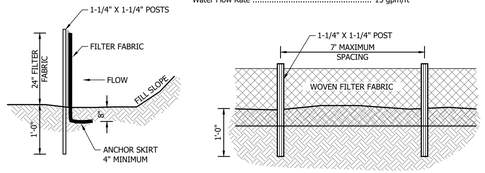

NOTES:
1. FILTER FABRIC FENCE SHALL BE A MINIMUM OF 36" IN WIDTH.
2. TURN SILT FENCE UP SLOPE AT ENDS.

TEMPORARY SILT FENCE

NOT TO SCALE

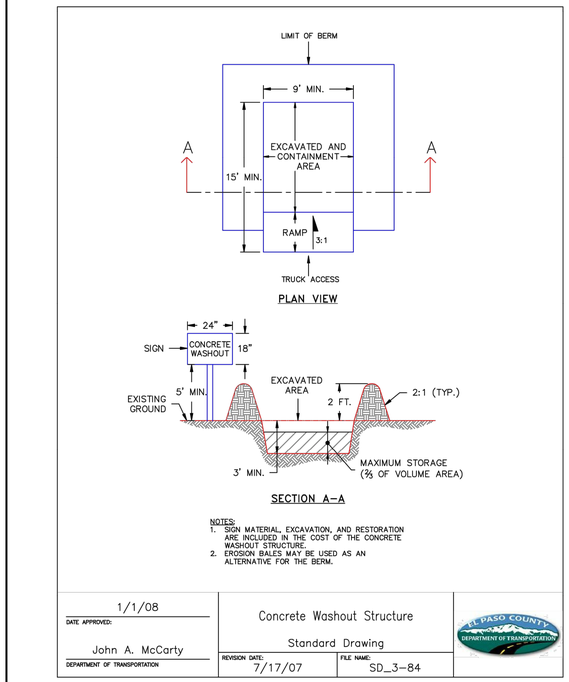

NOTES:
1. SIGN MATERIAL, EXCAVATION, AND RESTORATION ARE INCLUDED IN THE COST OF THE CONCRETE WASHOUT STRUCTURE.
2. EROSION BALES MAY BE USED AS AN ALTERNATIVE FOR THE BERM.

1/1/08 DATE APPROVED: John A. McCarty DEPARTMENT OF TRANSPORTATION	Concrete Washout Structure Standard Drawing REVISION DATE: 7/17/07	FILE NAME: SD_3–84

EL PASO COUNTY DEPARTMENT OF TRANSPORTATION

Seedbed Preparation

Apply lime to raise the pH to the level needed for species being seeded. Apply 23 pounds of 12-12-12 analysis fertilizer (or equivalent) per 1000 sq. ft. (approximately 1000 pounds per acre) or fertilize according to test. Application of 150 lbs. of ammonium nitrate on areas low in organic matter and fertility will greatly enhance vegetative growth.

Work the fertilizer and lime into the soil to a depth of 2-3 inches with a harrow, disk or rake operated across the slope as much as possible.

Seeding

Select a seed mixture based on projected use of the area (Figure 5-2), while considering best seeding dates. See Figure 5-3 this sheet. If tolerances are a problem, such as salt tolerance of seedings adjacent to streets and highways, see Figure 5-4 this sheet before final selection.

Figure 5-2: Permanent Seed Mixtures

Species	Seeding Rate lbs/acre		Suitable pH lbs/1000 sq. ft.	Site Suitability* Droughty	Well Drained	Wet
Level and Sloping, Open Areas						
Tall Fescue	35	0.8	5.5 - 8.3	2	1	2
Tall Fescue	25	0.6	5.5 - 8.3		1	
Red Clover**	5	0.12				
Kentucky Bluegrass	15	0.4	5.5 - 7.5	2	1	
Creeping Red Fescue	15	0.4				
Steep Banks and Cuts						
Tall Fescue	15	0.4	5.8 - 7.5	2	1	2
Kentucky Bluegrass	25	0.6				
Tall Fescue	35	0.8	5.5 - 8.3	2	1	
Emerald Crownvetch**	10	0.25				
Lawns and High Maintenance Areas						
Kentucky Bluegrass	40	0.9	5.8 - 7.5	2	1	
Creeping Red Fescue	40	0.9				
Perennial Ryegrass (Turf Type)	170	4.0	5.0 - 7.5		1	
Tall Fescue	170	4.0	5.5 - 8.3	2	1	2

* 1 - Preferred 2 - Will Tolerate
** Inoculate with specific Inoculant.

Temporary Seeding Dates

	Jan	Feb	Mar	Apr	May	June	July	Aug	Sept	Oct	Nov	Dec
Wheat or Rye												
Oats												
Annual Ryegrass												

Permanent Seeding Dates

	Jan	Feb	Mar	Apr	May	June	July	Aug	Sept	Oct	Nov	Dec
Native Seed												
Non-Irrigated*												
Irrigated												
Dormant Seeding**												

Irrigation needed during this period. To control erosion at times other than in the shaded areas, use mulch.

* Late summer seeding dates may be extended 5 days if mulch is applied.

** Note: If temporary stabilization must occur during the winter straw mulch applied at a rate of 2 tones per acre and crimped in will be an acceptable cover.

Temporary Seed Application Rates

Kind of Seed	1000 Sq. Ft.	Acre	Remarks
Wheat or Rye	3.5 lbs.	150 lbs.	Cover seed 1" to 1 1/2" deep
Spring Oats	2.3 lbs.	100 lbs.	Cover seed 1" deep
Annual ryegrass	1.0 lb.	40 lbs.	Cover seed 1/4"deep*

* Not necessary where mulch is applied.

SEEDING SCHEDULE

NOT TO SCALE

EL PASO COUNTY GRADING & EROSION CONTROL STANDARD NOTES

1. STORMWATER DISCHARGES FROM CONSTRUCTION SITES SHALL NOT CAUSE OR THREATEN TO CAUSE POLLUTION, CONTAMINATION, OR DEGRADATION OF STATE WATERS. ALL WORK AND EARTH DISTURBANCE SHALL BE DONE IN A MANNER THAT MINIMIZES POLLUTION OF ANY ON-SITE OR OFF-SITE WATERS, INCLUDING WETLANDS.
2. NOTWITHSTANDING ANYTHING DEPICTED IN THESE PLANS IN WORDS OR GRAPHIC REPRESENTATION, ALL DESIGN AND CONSTRUCTION RELATED TO ROADS, STORM DRAINAGE AND EROSION CONTROL SHALL CONFORM TO THE STANDARDS AND REQUIREMENTS OF THE MOST RECENT VERSION OF THE RELEVANT ADOPTED EL PASO COUNTY STANDARDS, INCLUDING THE LAND DEVELOPMENT CODE, THE ENGINEERING CRITERIA MANUAL, THE DRAINAGE CRITERIA MANUAL, AND THE DRAINAGE CRITERIA MANUAL VOLUME 2. ANY DEVIATIONS FROM REGULATIONS AND STANDARDS MUST BE REQUESTED, AND APPROVED, IN WRITING.
3. A SEPARATE STORMWATER MANAGEMENT PLAN (SMWP) FOR THIS PROJECT SHALL BE COMPLETED AND AN EROSION AND STORMWATER QUALITY CONTROL PERMIT (ESQCP) ISSUED PRIOR TO COMMENCING CONSTRUCTION. MANAGEMENT OF THE SWMP DURING CONSTRUCTION IS THE RESPONSIBILITY OF THE DESIGNATED QUALIFIED STORMWATER MANAGER OR CERTIFIED EROSION CONTROL INSPECTOR. THE SWMP SHALL BE LOCATED ON SITE AT ALL TIMES DURING CONSTRUCTION AND SHALL BE KEPT UP TO DATE WITH WORK PROGRESS AND CHANGES IN THE FIELD.
4. ONCE THE ESQCP IS APPROVED AND A "NOTICE TO PROCEED" HAS BEEN ISSUED, THE CONTRACTOR MAY INSTALL THE INITIAL STAGE EROSION AND SEDIMENT CONTROL MEASURES AS INDICATED ON THE APPROVED GEC. A PRECONSTRUCTION MEETING BETWEEN THE CONTRACTOR, ENGINEER, AND EL PASO COUNTY WILL BE HELD PRIOR TO ANY CONSTRUCTION. IT IS THE RESPONSIBILITY OF THE APPLICANT TO COORDINATE THE MEETING TIME AND PLACE WITH COUNTY STAFF.
5. CONTROL MEASURES MUST BE INSTALLED PRIOR TO COMMENCEMENT OF ACTIVITIES THAT COULD CONTRIBUTE POLLUTANTS TO STORMWATER. CONTROL MEASURES FOR ALL SLOPES, CHANNELS, DITCHES, AND DISTURBED LAND AREAS SHALL BE INSTALLED IMMEDIATELY UPON COMPLETION OF THE DISTURBANCE.
6. ALL TEMPORARY SEDIMENT AND EROSION CONTROL MEASURES SHALL BE MAINTAINED AND REMAIN IN EFFECTIVE OPERATING CONDITION UNTIL PERMANENT SOIL EROSION CONTROL MEASURES ARE IMPLEMENTED AND FINAL STABILIZATION IS ESTABLISHED. ALL PERSONS ENGAGED IN LAND DISTURBANCE ACTIVITIES SHALL ASSESS THE ADEQUACY OF CONTROL MEASURES AT THE SITE AND IDENTIFY IF CHANGES TO THOSE CONTROL MEASURES ARE NEEDED TO ENSURE THE CONTINUED EFFECTIVE PERFORMANCE OF THE CONTROL MEASURES. ALL CHANGES TO TEMPORARY SEDIMENT AND EROSION CONTROL MEASURES MUST BE INCORPORATED INTO THE STORMWATER MANAGEMENT PLAN.
7. TEMPORARY STABILIZATION SHALL BE IMPLEMENTED ON DISTURBED AREAS AND STOCKPILES WHERE GROUND DISTURBING CONSTRUCTION ACTIVITY HAS PERMANENTLY CEASED OR TEMPORARILY CEASED FOR LONGER THAN 14 DAYS.
8. FINAL STABILIZATION MUST BE IMPLEMENTED AT ALL APPLICABLE CONSTRUCTION SITES. FINAL STABILIZATION IS ACHIEVED WHEN ALL GROUND DISTURBING ACTIVITIES ARE COMPLETE AND ALL DISTURBED AREAS EITHER HAVE A UNIFORM VEGETATIVE COVER WITH INDIVIDUAL PLANT DENSITY OF 70 PERCENT OF PRE-DISTURBANCE LEVELS ESTABLISHED OR EQUIVALENT PERMANENT ALTERNATIVE STABILIZATION METHOD IS IMPLEMENTED. ALL TEMPORARY SEDIMENT AND EROSION CONTROL MEASURES SHALL BE REMOVED UPON FINAL STABILIZATION AND BEFORE PERMIT CLOSURE.
9. ALL PERMANENT STORMWATER MANAGEMENT FACILITIES SHALL BE INSTALLED AS DESIGNED IN THE APPROVED PLANS. ANY PROPOSED CHANGES THAT EFFECT THE DESIGN OR FUNCTION OF PERMANENT STORMWATER MANAGEMENT STRUCTURES MUST BE APPROVED BY THE ECM ADMINISTRATOR PRIOR TO IMPLEMENTATION.
10. EARTH DISTURBANCES SHALL BE CONDUCTED IN SUCH A MANNER SO AS TO EFFECTIVELY MINIMIZE ACCELERATED SOIL EROSION AND RESULTING SEDIMENTATION. ALL DISTURBANCES SHALL BE DESIGNED, CONSTRUCTED, AND COMPLETED SO THAT THE EXPOSED AREA OF ANY DISTURBED LAND SHALL BE LIMITED TO THE SHORTEST PRACTICAL PERIOD OF TIME. PRE-EXISTING VEGETATION SHALL BE PROTECTED AND MAINTAINED WITHIN 50 HORIZONTAL FEET OF A WATERS OF THE STATE UNLESS SHOWN TO BE INFEASIBLE AND SPECIFICALLY REQUESTED AND APPROVED.
11. COMPACTION OF SOIL MUST BE PREVENTED IN AREAS DESIGNATED FOR INFILTRATION CONTROL MEASURES OR WHERE FINAL STABILIZATION WILL BE ACHIEVED BY VEGETATIVE COVER. AREAS DESIGNATED FOR INFILTRATION CONTROL MEASURES SHALL ALSO BE PROTECTED FROM SEDIMENTATION DURING CONSTRUCTION UNTIL FINAL STABILIZATION IS ACHIEVED. IF COMPACTING PREVENTION IS NOT FEASIBLE DUE TO SITE CONSTRAINTS, ALL AREAS DESIGNATED FOR INFILTRATION AND VEGETATION CONTROL MEASURES MUST BE LOOSENED PRIOR TO INSTALLATION OF THE CONTROL MEASURE(S).
12. ANY TEMPORARY OR PERMANENT FACILITY DESIGNED AND CONSTRUCTED FOR THE CONVEYANCE OF STORMWATER AROUND, THROUGH, OR FROM THE EARTH DISTURBANCE AREA SHALL BE A STABILIZED CONVEYANCE DESIGNED TO MINIMIZE EROSION AND THE DISCHARGE OF SEDIMENT OFF SITE.
13. CONCRETE WASH WATER SHALL BE CONTAINED AND DISPOSED OF IN ACCORDANCE WITH THE SWMP. NO WASH WATER SHALL BE DISCHARGED TO OR ALLOWED TO ENTER STATE WATERS, INCLUDING ANY SURFACE OR SUBSURFACE STORM DRAINAGE SYSTEM OR FACILITIES. CONCRETE WASHOUTS SHALL NOT BE LOCATED IN AN AREA WHERE SHALLOW GROUNDWATER MAY BE PRESENT, OR WITHIN 50 FEET OF A SURFACE WATER BODY, CREEK OR STREAM.
14. DURING DEWATERING OPERATIONS OF UNCONTAMINATED GROUND WATER MAY BE DISCHARGED ON SITE, BUT SHALL NOT LEAVE THE SITE IN THE FORM OF SURFACE RUNOFF UNLESS AN APPROVED STATE DEWATERING PERMIT IS IN PLACE.
15. EROSION CONTROL BLANKETING OR OTHER PROTECTIVE COVERING SHALL BE USED ON SLOPES STEEPER THAN 3:1.
16. CONTRACTOR SHALL BE RESPONSIBLE FOR THE REMOVAL OF ALL WASTES FROM THE CONSTRUCTION SITE FOR DISPOSAL IN ACCORDANCE WITH LOCAL AND STATE REGULATORY REQUIREMENTS. NO CONSTRUCTION DEBRIS, TREE SLASH, BUILDING MATERIAL WASTES OR UNUSED BUILDING MATERIALS SHALL BE BURIED, DUMPED, OR DISCHARGED AT THE SITE.
17. WASTE MATERIALS SHALL NOT BE TEMPORARILY PLACED OR STORED IN THE STREET, ALLEY, OR OTHER PUBLIC WAY, UNLESS IN ACCORDANCE WITH AN APPROVED TRAFFIC CONTROL PLAN. CONTROL MEASURES MAY BE REQUIRED BY EL PASO COUNTY ENGINEERING IF DEEMED NECESSARY, BASED ON SPECIFIC CONDITIONS AND CIRCUMSTANCES.
18. TRACKING OF SOILS AND CONSTRUCTION DEBRIS OFF-SITE SHALL BE MINIMIZED. MATERIALS TRACKED OFF-SITE SHALL BE CLEANED UP AND PROPERLY DISPOSED OF IMMEDIATELY.
19. THE OWNER/DEVELOPER SHALL BE RESPONSIBLE FOR THE REMOVAL OF ALL CONSTRUCTION DEBRIS, DIRT, TRASH, ROCK, SEDIMENT, SOIL, AND SAND THAT MAY ACCUMULATE IN ROADS, STORM DRAINS AND OTHER DRAINAGE CONVEYANCE SYSTEMS AND STORMWATER APPURTENANCES AS A RESULT OF SITE DEVELOPMENT.
20. THE QUANTITY OF MATERIALS STORED ON THE PROJECT SITE SHALL BE LIMITED, AS MUCH AS PRACTICAL, TO THAT QUANTITY REQUIRED TO PERFORM THE WORK IN AN ORDERLY SEQUENCE. ALL MATERIALS STORED ON-SITE SHALL BE STORED IN A NEAT, ORDERLY MANNER, IN THEIR ORIGINAL CONTAINERS, WITH ORIGINAL MANUFACTURER'S LABELS.
21. NO CHEMICAL(S) HAVING THE POTENTIAL TO BE RELEASED IN STORMWATER ARE TO BE STORED OR USED ONSITE UNLESS PERMISSION FOR THE USE OF SUCH CHEMICAL(S) IS GRANTED IN WRITING BY THE ECM ADMINISTRATOR. IN GRANTING APPROVAL FOR THE USE OF SUCH CHEMICAL(S), SPECIAL CONDITIONS AND MONITORING MAY BE REQUIRED.
22. BULK STORAGE OF ALLOWED PETROLEUM PRODUCTS OR OTHER ALLOWED LIQUID CHEMICALS IN EXCESS OF 55 GALLONS SHALL REQUIRE ADEQUATE SECONDARY CONTAINMENT PROTECTION TO CONTAIN ALL SPILLS ONSITE AND TO PREVENT ANY SPILLED MATERIALS FROM ENTERING STATE WATERS, ANY SURFACE OR SUBSURFACE STORM DRAINAGE SYSTEM OR OTHER FACILITIES.
23. NO PERSON SHALL CAUSE THE IMPEDIMENT OF STORMWATER FLOW IN THE CURB AND GUTTER OR DITCH EXCEPT WITH APPROVED SEDIMENT CONTROL MEASURES.
24. OWNER/DEVELOPER AND THEIR AGENTS SHALL COMPLY WITH THE "COLORADO WATER QUALITY CONTROL ACT" (TITLE 25, ARTICLE 8, CRS), AND THE "CLEAN WATER ACT" (33 USC 1344), IN ADDITION TO THE REQUIREMENTS OF THE LAND DEVELOPMENT CODE, DCM VOLUME II AND THE ECM APPENDIX I. ALL APPROPRIATE PERMITS MUST BE OBTAINED BY THE CONTRACTOR PRIOR TO CONSTRUCTION (1041, NPDES, FLOODPLAIN, 404, FUGITIVE DUST, ETC.). IN THE EVENT OF CONFLICTS BETWEEN THESE REQUIREMENTS AND OTHER LAWS, RULES, OR REGULATIONS OF OTHER FEDERAL, STATE, LOCAL, OR COUNTY AGENCIES, THE MOST RESTRICTIVE LAWS, RULES, OR REGULATIONS SHALL APPLY.
25. ALL CONSTRUCTION TRAFFIC MUST ENTER/EXIT THE SITE ONLY AT APPROVED CONSTRUCTION ACCESS POINTS.
26. PRIOR TO CONSTRUCTION THE PERMITTEE SHALL VERIFY THE LOCATION OF EXISTING UTILITIES.
27. A WATER SOURCE SHALL BE AVAILABLE ON SITE DURING EARTHWORK OPERATIONS AND SHALL BE UTILIZED AS REQUIRED TO MINIMIZE DUST FROM EARTHWORK EQUIPMENT AND WIND.
28. THE SOILS REPORT FOR THIS SITE HAS BEEN PREPARED BY USDA NATURAL RESOURCES CONSERVATION SERVICE AND SHALL BE CONSIDERED A PART OF THESE PLANS.
29. AT LEAST TEN (10) DAYS PRIOR TO THE ANTICIPATED START OF CONSTRUCTION, FOR PROJECTS THAT WILL DISTURB ONE (1) ACRE OR MORE, THE OWNER OR OPERATOR OF CONSTRUCTION ACTIVITY SHALL SUBMIT A PERMIT APPLICATION FOR STORMWATER DISCHARGE TO THE COLORADO DEPARTMENT OF PUBLIC HEALTH AND ENVIRONMENT, WATER QUALITY DIVISION. THE APPLICATION CONTAINS CERTIFICATION OF COMPLETION OF A STORMWATER MANAGEMENT PLAN (SWMP), OF WHICH THIS GRADING AND EROSION CONTROL PLAN MAY BE A PART. FOR INFORMATION OR APPLICATION MATERIALS CONTACT:

COLORADO DEPARTMENT OF PUBLIC HEALTH AND ENVIRONMENT
WATER QUALITY CONTROL DIVISION
WQCD – PERMITS
4300 CHERRY CREEK DRIVE SOUTH
DENVER, CO 80246-1530
ATTN: PERMITS UNIT

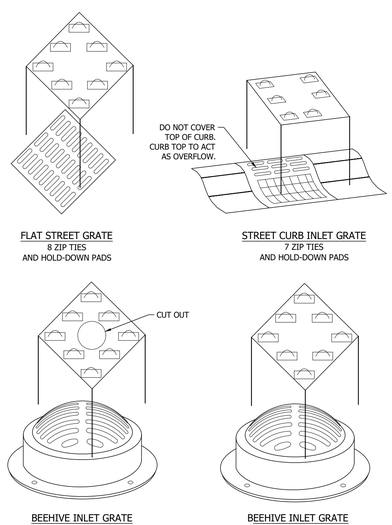

FLAT STREET GRATE
8 ZIP TIES
AND HOLD-DOWN PADS

STREET CURB INLET GRATE
7 ZIP TIES
AND HOLD-DOWN PADS

BEEHIVE INLET GRATE
WITH OVERFLOW CUT-OUT
8 ZIP TIES
AND HOLD-DOWN PADS

BEEHIVE INLET GRATE
8 ZIP TIES
AND HOLD-DOWN PADS

1. REMOVE SEDIMENT, DEBRIS, ICE AND SNOW FROM THE INLET GRATE SURFACE AND SURROUNDING AREA.

2. VERIFY FIT BY PLACING FILTER OVER INLET GRATE TO ENSURE THAT INLET FILTER EXTENDS AT LEAST ONE INCH BEYOND THE FRONT AND BOTH CURB ENDS. THE OVERLAP SLOWS WATER FLOW AND STARTS FILTERING SEDIMENT AND DEBRIS BEFORE WATER DROPS INTO THE INLET. THE USER IS RESPONSIBLE FOR PROPER INSTALLATION.

3. POSITION THE MAT. PLACE INLET FILTER ON GRATE WITH THE NET SIDE DOWN, FLUSH TO THE BACK EDGE AND EXTENDING BEYOND THE GRATE OPENING ON THE FRONT AND BOTH SIDES. THE ZIP TIES ATTACH INLET FILTER TO THE INLET GRATE COVER WITHOUT LIFTING THE GRATE COVER.

4. INSERT ZIP TIES. LIFT INLET FILTER SLIGHTLY TO ENABLE YOU TO SEE THE FIRST GRATE BAR FROM THE EDGE OF THE GRATE COVER. PUSH THE POINTED END OF A SCREWDRIVER THROUGH INLET FILTER TO CREATE A PILOT HOLE TO THE SIDE OF THE GRATE BAR. PUSH THE POINTED END OF ZIP TIE THROUGH HOLE IN HOLD-DOWN PAD AND THEN THROUGH THE INLET FILTER. BEND ABOUT 3" OF THE END OF THE ZIP TIE BACK ON ITSELF AND STEP ON THE FOLD TO FORM A HOOK SHAPE. THE HOOK SHAPE MAKES. IT EASIER TO GRAB THE END AFTER LOOPING UNDER THE GRATE BAR. NOW LOOP THE ZIP TIE UNDER THE GRATE BAR AND PULL UP; INSERT POINTED END OF TIE IN BOTTOM OF INLET FILTER ABOUT 2 INCHES FROM THE FIRST ENTRY POINT AND PUSH UP AND THROUGH FILTER AND SECOND HOLE IN HOLD-DOWN PAD.

5. TIGHTEN ZIP TIES. AFTER ATTACHING ALL OF THE ZIP TIES, RE-POSITION INLET FILTER TO COMPLETELY COVER AND OVERLAP THE GRATE. PULL FREE END OF ZIP-TIES HAND TIGHT TO ANCHOR INLET FILTER TO THE GRATE. CUT OFF FREE END OF ZIP TIES TO LEAVE A 1" TAIL.

6. EXTREME FLOW INSTALLATION REQUIRE- MENTS. SOME MUNICIPALITIES REQUIRE EXPOSED OVERFLOW. CHECK LOCAL REGULATIONS. EXPOSING THE EMERGENCY OVERFLOW ALLOWS UNFILTERED FLOW WHEN WATER DEPTH EXCEEDS INLET FILTER HEIGHT. IF NECESSARY, CUT INLET FILTER WITH A KNIFE OR SHEARS TO EXPOSE THE UPPER PORTION OF THE OVERFLOW SECTION. ALLOW THE STANDARD OVERLAP ON ALL SIDES OF INLET FILTER BEFORE CUTTING. MAINTENANCE INLET FILTER WILL COLLECT A LOT OF SEDIMENT. SWEEP TOP AND SIDES OF INLET FILTER TO REMOVE SEDIMENT AND DEBRIS AFTER EACH 1/2" RAIN EVENT. IN CASE OF STANDING WATER AT INLET, SWEEPING AWAY BUILT-UP DEBRIS ALLOWS WATER TO DRAIN THROUGH INLET FILTER.

INLET PROTECTION

NOT TO SCALE

SOILS LEGEND + DESCRIPTION

Map Unit: 9 - Blakeland-Fluvaquentic Haplaquolis

9--Blakeland-Fluvaquentic Haplaquolis
The Blakeland series consists of very deep, somewhat excessively drained soils that formed in eolian and alluvial materials from arkose deposits. They are on uplands, often adjacent to drainageways, and have slopes of 2 to 40 percent. The native vegetation is a tall and short grass association and its adjacent to the colder portions of the series range, there are patches of oakbrush and mountain-mahogany. The drainage is somewhat excessively drained. There is low runoff in the area and very high saturated hydraulic conductivity.

SOILS MAP

NOT TO SCALE

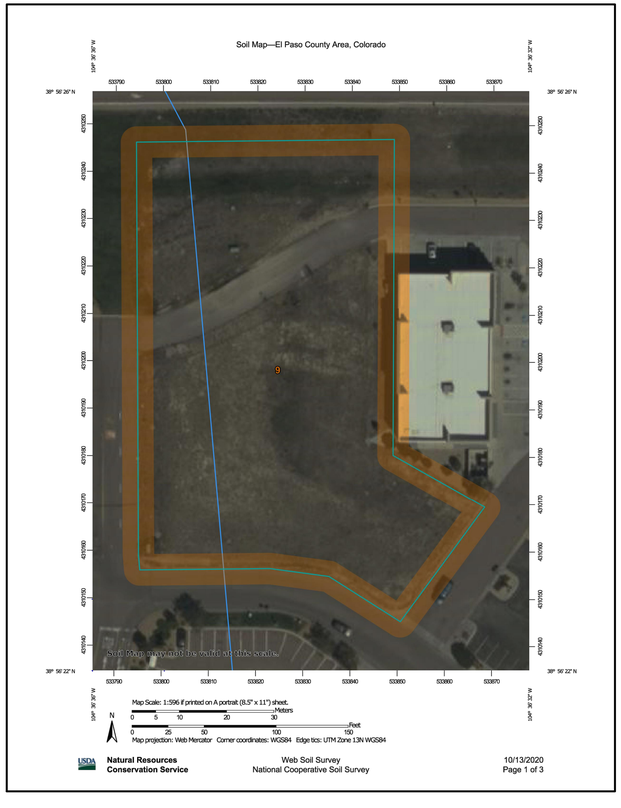

REVISION BLOCK

COLORADO LICENSED
MICHAEL A. THOMPSON II
0057768
PROFESSIONAL ENGINEER

Michael Thompson

DATE
10/21/2020

DRAWN BY KPB | CHECKED BY AMT

HAMILTON DESIGNS
A LIMITED LIABILITY COMPANY
11Municipal Drive, Suite 300
Fishers, Indiana 46038
P. (317) 570-8800
www.hamilton-designs.com

CONSTRUCTION PLANS FOR:
ARBY'S I FALCON, CO
11775 Meridian Market View
Falcon, Colorado 80831

BELL AMERICAN GROUP, LLC
8930 Bash Street, Suite L
Indianapolis, Indiana 46256

PROJECT NO.
2019-0246

DATE
10/21/2020

SCALE

SHEET NAME
STORMWATER POLL. PREVENTION DETAILS

SHEET NO.
CE-501

p:\2019\0246 - bell american group - falcon, co\drawings\ce-501.dwg