STORMWATER MANAGEMENT PLAN

FLYING HORSE NORTH
FILING NO. 1

Prepared for:
PRI 2 LLC
6385 Corporate Drive, Suite 200
Colorado Springs, CO 80919

ATTN: Mr. Drew Balsick

719-592-9333

Job no. 1096.11

PCD File No. SF-18-001

CLASSIC
CONSULTING
ENGINEERS & SURVEYORS

619 N. Cascade Ave., Ste. #200 Colorado Springs, CO 80903 (719) 785-0790 www.ClassicConsulting.net

EROSION & STORMWATER QUALITY CONTROL PLAN FOR FLYING HORSE NORTH FILING NO. 1

COLORADO DISCHARGE PERMIT SYSTEM STATEMENT (CDPS)/ EROSION AND STORMWATER QUALITY CONTROL PLAN (ESQCP)

Site Inspector

The following Erosion and Stormwater Quality Control Plan (ESQCP) is a detailed account of the requirements of the City of Colorado Springs and El Paso County Drainage Criteria Manual (DCM) volumes 1 & 2 and by the Denver Urban Drainage and Flood Control District. The main objective of this plan is to help mitigate the increased soil erosion and subsequent deposition of sediment off-site and other potential stormwater quality impacts during the period of construction from start of earth disturbance until final landscaping and other potential permanent stormwater quality measures are effectively in place.

This document must be kept at the construction site at all times and be made available to the public and any representative of the Colorado Department of Health - Water Quality Control Division, if requested.

This report is also proposed to meet all requirements of the Colorado Discharge Permit System for Construction Activity. If any discrepancies between this report and DCM exist, the DCM will prevail.

EROSION & STORMWATER QUALITY CONTROL PLAN FOR FLYING HORSE NORTH FILING NO. 1

TABLE OF CONTENTS

- **SITE DESCRIPTION**
  - RECEIVING WATER(S) Page 1
  - PROPOSED CONSTRUCTION ACTIVITY Page 1
  - PROPOSED SEQUENCE OF ACTIVITIES/ CONSTRUCTION TIMING Page 2
  - EROSION & SEDIMENT CONTROL Page 2
  - DEVELOPMENT AREA Page 3
  - SOILS INFORMATION Page 3
  - EXISTING SITE CONDITIONS. Page 3
- **SITE MAP (See Appendix)**
- **STORMWATER MANAGEMENT CONTROLS**
  - SWMP ADMINISTRATOR Page 4
  - POTENTIAL POLLUTANT SOURCES Page 4
  - BMPS FOR POLLUTION PREVENTION Page 5
  - BMP SELECTION Page 6
  - MATERIAL HANDLING & SPILL PREVENTION Page 6
  - CONCRETE/ASPHALT BATCH PLANTS Page 6
  - WASTE MANAGEMENT & DISPOSAL INCLUDING CONCRETE WASHOUT Page 7
  - DOCUMENTING SELECTED BMPS Page 7
  - NON-STORMWATER DISCHARGES Page 7
  - STORMWATER DEWATERING Page 7
  - REVISING BMPS AND THE SWMP Page 7
- **FINAL STABILIZATION AND LONG-TERM STORMWATER MANAGEMENT**
- **INSPECTION AND MAINTENANCE PROCEDURES**
  - INSPECTION SCHEDULES & PROCEDURES Page 9
  - SWMP OWNER/ADMIN. INSPECTION PROCEDURES & SCHEDULES Page 9
  - BMP MAINTENANCE/REPLACEMENT & FAILED BMPS Page 9
  - RECORD KEEPING AND DOCUMENTING INSPECTIONS Page 9
- **EROSION CONTROL COST OPINION**

APPENDIX

VICINITY MAP
COPY OF GENERAL PERMIT APPLICATION
CONTRACTOR SEQUENCE OF ACTIVITIES
OPERATION & MAINTENANCE INSPECTION RECORD
SPILL PRVENTION PLAN
STANDARD BMP DETAILS w/ INSTALLATION & MAINTENANCE REQUIREMENTS

CLASSIC SM
CONSULTING
ENGINEERS & SURVEYORS

EROSION & STORMWATER QUALITY CONTROL PLAN FOR FLYING HORSE NORTH FILING NO. 1

SITE DESCRIPTION

Flying Horse North Filing No. 1 is a 552 acre site located in all of section 36, township 11 south, range 66 west of the sixth principal meridian, and a portion of sections 30 and 31 township 11 south, range 65 west of the sixth principal meridian. This is the first phase of lot development within the Flying Horse North PUD. The site is bounded on the north by Hodgen Road and the High Forest Ranch Community, to the south by the Cathedral Pines Subdivision and unplatted county land, to the east by Black Forest Road, and to the west by the State Highway 83 and unplatted county land. The site stretches across 2 existing drainage basins, the Black Squirrel Creek Drainage Basin and West Cherry Creek Drainage Basin. Large lot single family residential and a golf course with a club house are included in the proposed PUD Plan for this site.

The project site is shown on the Vicinity Map in the Appendix of this report.

No wetlands, springs, landscape irrigation return flows or construction dewatering is anticipated on this site. Should any of the above items occur unexpectedly, BMPs shall be implemented immediately. The local regulatory agency shall be notified for approval of the BMPs and methods.

- **RECEIVING WATERS**

Name of Receiving Water(s)	Black Squirrel Creek and West Cherry Creek
Size/Type/Location of Outfall(s)	Flows are conveyed overland and through public side road ditches and storm water systems to multiple private, onsite detention and SWQ facilities.
Discuss discharge connection to Municipal system (include system name, location, and ultimate receiving water(s):	Onsite detention and SWQ facilities outfall to various natural channels within both drainage basins.

- **PROPOSED CONSTRUCTION ACTIVITY**

  Proposed construction activities within this project include removal of existing vegetation, roadway and pond grading, installation of storm sewer culverts and erosion control measures. Based on the existing early grading approval (PUD-16-002), the tree removal, roadway and pond grading and installation of erosion control measures are now complete. Upon approval of the Filing 1 CD's, storm sewer culvert installation, pond stormwater quality/outlet structures and roadway paving will commence. The

CLASSIC CONSULTING ENGINEERS & SURVEYORS

installation of dry utilities will immediately follow the construction of the storm culverts, prior to roadway paving. Home building construction will take place upon plat approval for Filing No. 1. These major construction activities are anticipated to continue through 2018. State Highway 83 road improvements will commence upon CDOT approval and Notice to Proceed with an anticipated construction schedule of Fall 2018 through Spring 2019. Final stabilization of all construction activities excluding home building, is anticipated by Summer 2019.

- **PROPOSED SEQUENCE OF ACTIVITY/CONSTRUCTION TIMING**

  Upon site contractor selection, contractor to include sequence of activities schedule in the section provided in the Appendix of this report. A standard sequence of events typically includes the following:

  1) Install perimeter, interior & exterior BMPs
  2) Clear and grub site
  3) Rough overlot grading
  4) Excavation & installation of temp. storm pipes and erosion control measures

- **EROSION AND SEDIMENT CONTROL**

  Erosion control measures shall be implemented in a manner that will protect properties and public facilities from the adverse effects of erosion and sedimentation as a result of construction and earthwork activities. In order to prevent a net increase of sediment load, Best Management Practices will be implemented during the construction life of this project. A silt fence will be built around the perimeter of the disturbed areas. All roads will be inspected to ensure that sediment from on-site construction activity is not being discharged with the stormwater. Roadways shall be swept as needed for controlling tracking of mud onto public roadways. Vehicle tracking control pads will aid in minimizing soil tracking onto roadways. All disturbed areas, not sodded, will be reseeded with a native seed mix and watered until a mature stand is established. All areas disturbed will be protected with silt fence, diversion swales and temporary sediment traps until such time as the site has been re-vegetated. Vegetation and vegetated buffers shall be preserved as much as possible. Wherever feasible, vegetated buffers shall be maintained free from vehicle/equipment parking, storage, stockpiles, or other impacts.

- **DEVELOPMENT AREA**

Total Site Area	552 Acres
Site area to be disturbed	250 Acres
Percent disturbance	17.6 %

- **SOILS INFORMATION**

The average soil condition reflects Hydrologic Soils Group "B" (Brussett Loam, Elbeth Sandy Loam, Kettle Gravelly Loamy Sand, Peyton Sandy Loam, Peyton Pring Complex, Pring Course Sandy Loam, and Tomah-Crowfoot Loamy Sand) as determined by the "Web Soil Survey," prepared by the Natural Resources Conservation Service. Based upon the current proposed development of this site, the following runoff coefficients would be realized:

Existing site runoff coefficient =	= 0.35
Developed site runoff coefficient	= 0.41 average 5.0 acre residential

- **EXISTING SITE CONDITIONS**

The site is predominately wooded - evergreen forest with dense trees in much of the area. However, the portion of the site within the Cherry Creek Basin does contain many existing dirt roads and has very little trees. Again, the majority of this phase of the project is within the Black Squirrel Creek Basin, currently sheet flows in a southwesterly direction. Significant off-site flows draining onto the property occur at the northwest portion of the property. This flow is from the High Forest Ranch development.

This site is currently _70__% vegetated or evergreen forest and has existing slopes ranging from approximately 2% to 2:1.

There are no areas designated as wetlands within the development limits for this report.

CLASSIC CONSULTING ENGINEERS & SURVEYORS

SITE MAP

Included in the appendix of this report is the approved overlot grading plan for the subject property which will serve as the SWMP site map. This document contains site specific grading and erosion control BMP measures as required and approved by the El Paso County Development Services Department. Limits of disturbance, areas of cuts/fills, proposed stockpile areas, areas used for storage of materials, equipment, soil, or waste, batch plants, minimum and maximum cut/fill slopes, existing limits of significant vegetation, locations of springs, streams, and/or wetlands, and existing facilities (including but not limited to: detention/drainage facilities, structures, retaining walls, gas main, water main, wastewater main, electric and telecom vaults, fences, sidewalks, trails, curbs and streets) may be represented on this plan, if applicable. The site map will depict locations of specific interim and ultimate stormwater management BMPs throughout the lifetime of the project. Erosion control cost assurances have been posted to El Paso County in the amount approved on the Grading and Erosion Control FAE. The site map/overlot grading plan shall be amended to include any additional interim or phased BMPs over and above measures included on the site map, as required by contractor's construction schedule. All construction BMP details will be included in the appendix of this report. Detail sheets include installation and maintenance requirements. Also reference the City of Colorado Springs and El Paso County Drainage Criteria Manual (DCM) volumes 1 & 2 and by the Denver Urban Drainage and Flood Control District for additional information and guidance regarding construction BMPs.

STORMWATER MANAGEMENT

- **SWMP ADMINISTRATOR**

  The SWMP Administrator can be an individual(s), position, or title – this entity is responsible for developing, implementing, maintaining, and revising the SWMP. The Administrator is the contact for all SWMP related issues and is the entity responsible for its accuracy, completeness, and implementation. Therefore, the SWMP Administrator should be a person with authority to adequately manage and direct day to day stormwater quality management activities on the subject site. Reference the Appendix of this report for the SWMP permit application which names the individual/entity applying for the permit and naming the Administrator of the SWMP.

- **POTENTIAL POLLUTANT SOURCES**

  Potential pollutant sources which shall be evaluated for potential to contribute pollutants to stormwater discharge from the subject site may include the following:

- Disturbed and stored soils
- Vehicle tracking of sediments
- Management of contaminated soils
- Loading and unloading operations
- Outdoor storage activities (building materials, fertilizers, chemicals, etc.)
- Vehicle and equipment maintenance and fueling
- Significant dust or particulate generating processes
- Routine maintenance activities involving fertilizers, pesticides, detergents, fuels, solvents, oils, etc.
- On-site waste management practices (waste piles, liquid wastes, dumpsters)
- Concrete truck/equipment washing, including the concrete truck chute associated fixtures and equipment
- Dedicated asphalt and concrete batch plans
- Non-industrial waste sources such as worker trash and portable toilets
- Other areas or procedures where potential spills can occur.

The location and description of these areas as applicable are shown on the attached SWMP Site Map.

- **BMPS FOR POLLUTANT PREVENTION**

The following are common practices to mitigate potential pollutants:

- Wind erosion shall be controlled bye sprinkling site roadways and/or temporary stabilizing stockpiles. Each dump truck hauling material from the site will be required to be covered with a tarpaulin.
- Sanitary facilities shall be placed at a minimum of 10' from any curbline and 50' from any inlet. If not feasible for the project, use of a secondary containment shall be implemented.
- Equipment fueling and Maintenance Services – a designated fueling area will be established to contain any spill resulting from fueling, maintenance, or repair of equipment. Contractors will be responsible for containment, cleanup, and disposal of any leak or spill and any costs associated with the cleanup and disposal.
- Chemical products shall be protected from precipitation, free from ground contact, and stored properly to prevent damage from equipment or vehicles.
- Material stockpiles (soils, soil amendments, debris/trash piles) – All construction trash and debris will be deposited in the dumpster.

- Sediment and Migration of Sediment – Sweeping operations will take place as needed to keep roadways maintained. The perimeter of the site will be evaluated for any potential impact resulting from trucking operations or sediment migration from the site. BMP devices will be placed to protect storm system inlets should any roadway tracking or sediment migration occur.
- Snow removal and/or stockpiling will be considered prior to placement at the site. Snow stockpiles must be kept away from any stormwater conveyance system (i.e., inlets, ponds, outfall locations, roadway surfaces, etc.).

- **BMP SELECTION**

  Selection of the appropriate BMP will limit the source of the pollutant. Guidance for the selection process can be found by referencing the El Paso County Drainage Criteria Manual (DCM) volumes 1 & 2 and by the Denver Urban Drainage and Flood Control District.

  During grading and construction activity for the subject site, silt fence will be installed along the perimeter of the site as well as at the limits of grading within the project. Temporary diversion swales will be installed to a minimum of 1% slope to divert stormwater to several proposed sediment basins intended to collect stormwater and filter the sediment before conveyance into the proposed storm systems. Inlet protection will be installed at all proposed and adjacent inlets to ensure no downstream pollutants will enter storm sewer facilities. Vehicle tracking control pads will be installed at all access points to the property. Regular maintenance and inspection of these facilities will be necessary throughout grading operations and until vegetation is reestablished to ensure proper function of the sediment basin temporary outlet structures.

- **MATERIAL HANDLING & SPILL PREVENTION**

  Where materials can impact stormwater runoff, existing and planned practices that reduce the potential for pollution must be included in a spill prevention plan (See Appendix).

- **CONCRETE/ASPHALT BATCH PLANTS**

  Where applicable, the SWMP must be amended by the contractor to describe and locate on the Site Map all practices used to control stormwater pollution from dedicated asphalt or concrete batch plants.

- **WASTE MANAGEMENT AND DISPOSAL INCLUDING CONCRETE WASHOUT**

  Where applicable, the SWMP must be amended by the contractor to describe and locate on the Site Map all practices implemented at the site to control stormwater pollution from all construction site wastes (liquid and solid) including concrete washout activities.

- **DOCUMENTING SELECTED BMPS**

  As discussed in the SITE MAP section of this report, documentation of the selected BMPs will be included on the site map / overlot grading plan included in this report. The site map/overlot grading plan shall be amended to include any additional interim or phased BMPs over and above measures included on the site map, as required by contractor's construction schedule.

- **NON-STORMWATER DISCHARGES**

  Except for emergency fire fighting activities, landscape irrigation return flow, uncontaminated springs, construction dewatering and concrete washout water, the SWMP permit covers only discharges composed entirely of stormwater.

- **STORMWATER DEWATERING**

  The discharge of pumped water, ONLY from excavations, ponds, depressions, etc., to surface waters or to a municipal separate storm-sewer system is allowed by the Stormwater Construction Permit as long as the dewatering activity and associated BMPs are identified in the SWMP (including location of activity), and the BMPs are implemented in accordance with the SWMP. Where applicable, all stormwater and groundwater dewatering practices implemented to control stormwater pollution for dewatering must be amended in the SWMP and Site Map by the contractor.

- **REVISING BMPs AND THE SWMP**

  The implemented BMPs will need to be modified and maintained regularly to adapt to changing site conditions and to ensure that all potential stormwater pollutants are properly managed. The BMPs and pollutant sources much be reviewed on an ongoing basis by the Administrator as assigned by the Permit. With any construction project, special attention must be paid to construction phasing and therefore revisions to the SWMP to include any additional or modification to the BMPs and SWMP report. The SWMP must be modified or amended to accurately reflect the field conditions. Examples include - but

are not limited to – removal of BMPs, identification of new potential pollutant procedures, and changes to information provided in the site map/overlot grading plan. SWMP revisions must be made prior to changes in site conditions. The SWMP should be viewed as a "living document" throughout the lifetime of the project.

FINAL STABILIZATION AND LONG-TERM STORMWATER MANAGEMENT

Permanent stabilization of the site includes seeding and mulching the site. Seeding and mulching consists of loosening soil, applying topsoil (if permanent seeding) and drill seeding disturbed areas with grasses and crimping in straw mulch to provide immediate protection from raindrop and wind erosion. As the grass cover becomes established, provide long term stabilization of exposed soils.

Once the construction activity ceases permanently, the area will be stabilized with permanent seed and mulch. All areas that will not be impacted by construction of buildings will be seeded and landscaped as feasible. After seeding, each area will be mulched with straw. The straw mulch is to be tacked into place by a disc with blades set nearly straight. Topsoil stockpiles will be stabilized with temporary seed and mulch. Areas of the site that are to be paved will be temporarily stabilized until asphalt is applied.

The temporary perimeter controls (silt fence or equivalent) will not be removed until all construction activities at the site are complete and soils have been stabilized. Upon completion of construction activities, the site shall be inspected to ensure all equipment, waste materials, and debris have been removed. All other BMPs or other control practices and measure that are to remain after completion of construction will be inspected to ensure they are properly functioning. Final stabilization is reached when all soil disturbing activities at the site have been completed and uniform vegetative cover has been established with a density of at least 70% of pre-disturbance levels. For purposes of the SWMP, establishment of a vegetative cover capable of providing erosion control equivalent to the pre-existing conditions at the site can be considered final stabilized.

Long term stormwater quality management will be handled by the proposed on-site stormwater quality and detention facilities proposed in the Master Development Drainage Plan and Final Drainage Report for Sanctuary Pointe Phase 1 as well as the Preliminary/Final Drainage Report for Filings No. 1 & 2 and Carriages at Sanctuary Pointe Filing No. 1 by CCES. All facilities will detain stormwater to release rates less than or equal to historic levels as well as provide water quality capture volume prior to releasing stormwater to downstream facilities.

INSPECTION AND MAINTENANCE PROCEDURES

All drainage facilities will be monitored using the enclosed "Monitoring and Maintenance Inspection Record" checklist (Appendix II).

- **SWMP OWNER/ADMINISTRATOR INSPECTION PROCEDURES & SCHEDULES**

  The Owner/Administrator shall adhere to the following inspection procedures during the development of the site:

  1. Make thorough inspection of the stormwater management system at least every 14 days.
  2. Make thorough inspection of the stormwater management system within 24 hrs of each precipitation event that creates runoff.
  3. If any system deficiencies are noted, corrective actions must begin immediately. Documentation of inspection must be available if requested.
  4. Records of the site inspections or facility replacement modifications must be kept at the site within this report.
  5. 30 day inspections must take place on this site where construction activity is complete, but vegetative cover is still being established.

In this report's appendix, a site inspection form has been included for use by the Inspector. Upon completion of this form, the document is to be kept in the provided folder also in the rear of this report.

- **BMP MAINTENANCE / REPLACEMENT & FAILED BMPs**

  The Stormwater Construction Permit requires that all erosion and sediment control practices and other protective measures identified in the SWMP be maintained in effective and operation condition. A preventative maintenance program should be in place to prevent BMP breakdowns and failures by proactively maintaining or replacing BMPs and equipment. The inspections process should also include procedures to ensure that BMPs are replaced or new BMPs added to adequately manage the pollutant sources at the site. This procedure is part of the ongoing process of revising the BMPs and SWMP as previously discussed, and any changes shall be recorded in the SWMP.

- **RECORD KEEPING AND DOCUMENTING INSPECTIONS**

  The following items must be documented as part of the site inspections:

  - Inspection date

- Name(s) and title(s) of personnel making inspection
- Location(s) of discharges of sediment or other pollutants from site
- Location(s) of BMPs that need to be maintained
- Location(s) of BMPs that fail to operate as designed or proved inadequate in a particular location
- Location(s) where additional BMPs are needed that were not in place at time of inspection
- Deviations from the minimum inspection schedule
- Descriptions of corrective action for items above including dates and measures taken to prevent future violations
- Signed statement of compliance added to the report after correction action has been taken

EROSION CONTROL COST OPINION

The Erosion Control Cost Opinion for this project is provided in the Financial Assurance Estimate dated October 27, 2016 and signed by the County. (PUD-16-002)

PREPARED BY:

Classic Consulting Engineers & Surveyors, LLC

Marc. A Whorton, P.E.
Project Manager

maw/109611/ SWMP REPORT.doc

VICINITY MAP

CLASSIC SM
CONSULTING
ENGINEERS & SURVEYORS

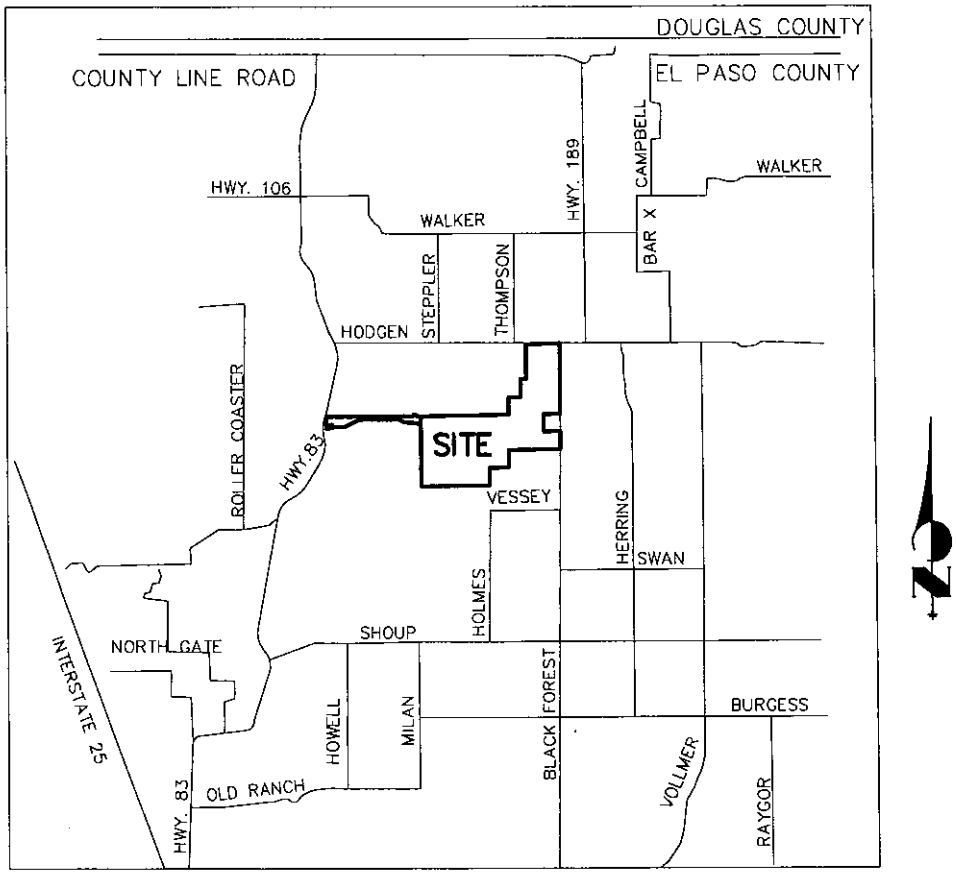

VICINITY MAP

NTS

COPY OF PERMIT APPLICATION

General permit application for stormwater discharges associated with construction activity.

CLASSIC SM
CONSULTING
ENGINEERS & SURVEYORS

CONTRACTOR SEQUENCE OF ACTIVITIES

CLASSIC SM
CONSULTING
ENGINEERS & SURVEYORS

COLORADO DISCHARGE PERMIT

SYSTEM (CDPS) CHECKLIST
Operation & Maintenance Inspection Record

The following inspection records are to be used at each bi-monthly stormwater management system inspection and after any precipitation or snowmelt event that causes surface runoff. As a result of these inspections, the SWMP may need to be revised. The inspection records and revised SWMP shall be made available to the division upon request. If the construction activity lasts more than 12 months, a copy of the inspection records and revised SWMP shall be sent to the division by May 1 of each year covering April 1 to March 31.

CLASSIC SM
CONSULTING
ENGINEERS & SURVEYORS

COMPLETED OPERATION AND MAINTENANCE INSPECTION RECORDS

CLASSIC SM
CONSULTING
ENGINEERS & SURVEYORS

SPILL PREVENTION PLAN

CLASSIC SM
CONSULTING
ENGINEERS & SURVEYORS

Spill Prevention, Control and Countermeasure (SPCC) Plan

Facility Name: _____
Address: _____
_____

Contact Name: _____
Phone: _____
Fax: _____
Email: _____

Certification: I hereby certify that I have examined the facility, and, being familiar with the provisions of 40 CFR part 112, attest that this SPCC plan has been prepared, or updated within 5 years, in accordance with good engineering practices and meets the requirements listed in 40 CFR part 112.

This plan has been certified by:

Date of certification: _____ *Engineer's Seal*

Copies of this plan are located at the facility and are available to all employees.

Location(s) of plan(s): _____

I. FACILITY INFORMATION

a. Facility Name: _____

b. Mailing Address: _____
_____

c. Physical address if different: _____
_____
_____

d. Owner Name: _____

e. Owner Address: _____
_____

f. Primary Contact Name: _____
Work Phone Number: _____
Home Phone Number: _____
Mobile Phone Number: _____

g. Secondary Contact Name:
Work Phone Number: _____
Home Phone Number: _____
Mobile Phone Number: _____

h. Date of Initial Operation: _____

II. SITE ASSESSMENT

a. Location:
Describe where facility is located. For example, "This site is located along Broad Creek about 2 miles north of its confluence with the Choptank River at Holland Point. Road access is from. . . . The site is located on Talbot County ADC map 22 (H5). Latitude is ____ and longitude is ____ ."

_____
_____
_____
_____
_____
_____
_____
_____
_____
_____
_____

III. FACILITY DESCRIPTION

a. Acres of land: ___

b. Facilities and Equipment:
Place an X beside all that apply.

___ Garage for vehicle processing
___ Parts store
___ On-site crushcr
____Impervious crush pad for crusher
___ Impervious pad for outside vehicle processing
___ Spill kit/emergency equipment
___ Refrigerant (Freon) extractor
___ Parts washer
___ Other structures and major equipment:

Please list: _____
_____
_____
_____
_____

c. Services:
Place an X beside all that apply.

___ Dismantler/Recycler
___ Sell used parts
___ Sell vehicles for scrap
____Crushing
___ Auto body/repair shop
___ Sell used cars
___ Other services:

Please list: _____
_____
_____
_____

d. Fixed Storage:
List capacity and contents of each storage container. For example, "One 6,000 gallon above ground tank containing diesel fuel." Be sure to include diesel, gasoline, waste oil, heating oil, kerosene, paint thinner and other solvents. Also describe the construction of the containers, secondary containment for each, liquid level indicators, alarms and method of corrosion protection for each container._____
_____
_____
_____
_____
_____
_____
_____
_____
_____
_____
_____
_____

e. Non-Fixed Storage:
List capacity and contents of each storage container. For example, "One 55 gallon drum for recycled oil." Be sure to indicate what each container is used for, its condition and construction and how secondary containment is provided. _____

_____
_____
_____
_____
_____
_____
_____
_____
_____
_____

f. Total quantity of stored materials:
The combined quantity of the materials listed above: _____ gallons

IV. OIL SPILL HISTORY

Place an X on the appropriate line and proceed accordingly.

____ There has never been a significant spill at the above named facility.

____ There have been one or more significant spills at the above named facility. Details of such spill(s) are described below.

For each spill that occurred, supply the following information:

- Type and amount of oil spilled
- Location, date and time of spill(s)
- Watercourse affected
- Description of physical damage
- Cost of damage
- Cost of clean-up
- Cause of spill
- Action taken to prevent recurrence

_____
_____
_____
_____
_____
_____
_____
_____
_____
_____

V. POTENTIAL SPILL VOLUMES AND RATES

Fill in all applicable blanks. Be prepared to show the engineer documentation of flow rates. Your fuel vendor and the manufacturer of your storage and dispensing equipment should be able to provide this documentation.

Potential Event	Volume Released	Spill Rate
Complete failure of a full tank*	____ gallons	instantaneous
Partial failure of a full tank*	1 to ____ gallons	gradual to instantaneous
Tank overflow**	1 to ____ gallons	up to ____ gallons per minute
Leaking during unloading***	up to ____ gallons	up to ____ gallons per minute
Pipe failure****	up to ____ gallons	up to ____ gallons per minute
Leaking pipe or valve****	several ounces to gallons	up to ____ gallons per minute
Fueling operations****	several ounces to gallons	up to ____ gallons per minute
Oil and grease	several ounces to quarts	spotting

* Volume of largest tank
** Calculate using the rate at which fuel is dispensed from the delivery truck into your tank(s).
*** Calculate using the rate at which petroleum would be withdrawn from the tank if it should have to be emptied (*e.g.*, if it was being taken out of service).
**** Calculate based on the specifications of your equipment.

VI. SPILL PREVENTION AND CONTROL

a. Spill Prevention:
Provide specific descriptions of containment facilities and practices. Include description of items such as double-walled tanks, containment berms, emergency shut-offs, drip pans, fueling procedures and spill response kits. Also, describe how and when employees are trained in proper handling procedures and spill prevention and response procedures.

_____
_____
_____
_____
_____
_____
_____
_____
_____
_____
_____
_____
_____
_____
_____
_____

b. Spill discharge and flow:
For each potential spill source, describe where petroleum would flow in the event of a spill. For example, "The 6,000 gallon diesel tank has a pre-manufactured secondary containment system capable of holding 110 percent of the total volume of the tank" and, "A spill from engine repair would be contained inside the shop building and quickly cleaned up with oil absorbents." Incorporate site map by reference (see instructions under *Appendices*).

c. Spill response:
Identify what equipment would be deployed by whom and in what situation. Also, include phone numbers for response agencies, *e.g.*, U.S. Coast Guard, fire department, spill response contractors, etc. A copy of your spill response plan may be attached as an appendix to this SPCC plan in lieu of completing this section.

d. Security
Provide a description of how all containers are protected when the facility is not in operation or unattended. Include a description of fencing, access control, gates, locks, etc. that prevent access by unauthorized individuals.

VII. FACILITY INSPECTIONS

a. Routine Inspections

Name facilities and the frequency with which they are inspected. For example, "The fuel pumps are inspected daily. The materials storage area is inspected monthly." Describe all facility containers, piping, etc. that is to be inspected. Name the person who has responsibility to implement preventative maintenance programs, oversee on-site inspections, coordinate employee training, maintain records, update the plan as necessary, and ensure that reports are submitted to the proper authorities.

b. Annual Inspections

Include a description of annual comprehensive inspections. For example, "A site inspection is also conducted annually by appropriate responsible personnel to verify that the description of potential pollutant sources are accurate, that the map reflects current site conditions, and that the controls to reduce the pollutants identified in this plan are being implemented and are adequate. This annual inspection will be conducted above and beyond the routine inspections done focusing on designated equipment and areas where potential sources are located."

VIII. RECORD KEEPING

Describe record keeping procedures. For example, "Record keeping procedures consist of maintaining all records a minimum of three years. The following items will be kept on file: current SPCC plan, internal site reviews, training records, and documentation of any spills or maintenance conducted in regards to these sites." *Maintenance Inspection, Employee Training,* and *Record Keeping* logs are included in this template for your use.

IX. MAINTENANCE INSPECTIONS

Maintenance Coordinator: _____. Maintenance Coordinator responsibilities include implementation of preventative maintenance programs and oversight of on-site inspections.

Use this table to record inspections:

Facility Inspected	**Date of Inspection**	**Name of Inspector**	**Result Pass/Fail**	**Comments**

X. RECORD KEEPING OF INCIDENTAL SPILLS

Record Keeper: _____. Record Keeper responsibilities include maintaining records of incidents, updating the SPCC plan as necessary and ensuring reports are submitted to the proper authorities when necessary.

Incident No.	Type of Incident	Date of Occurrence	How it was Cleaned Up

XI. APPENDICES

a. Site map:
Attach a site map as Appendix A to this plan. You may attach an existing site map or create your own. If you use an existing map, be sure that the items listed below are included. If you need to create a site map, use a large enough piece of paper so all site plan elements may be seen and try to keep the map to a scale (e.g. 1" = 20' The following instructions should guide you step-by-step. Please use a straight edge (ruler) while creating the sketch.

- The sketch should be oriented as if you were in a plane looking down on your property (an aerial view), with North at the top (draw an arrow indicating north).
- Draw and label all roadways surrounding your salvage yard property.
- Draw and label all facilities within your salvage yard as close proportionately as possible.
- Draw an arrow(s) pointing in the direction of downhill flow of water when it rains.
- Draw the location of crushing pads that may presently exist on your property.
- Draw the location and general layout of all vehicles associated with your salvage yard.
- Label any rivers or waterways surrounding your salvage yard.
- Draw and label all methods of entry to the salvage yard.
- Draw and label the location of all fuel containment facilities.
- Draw and label the location of all in-place spill prevention, control and countermeasure devices.

b. Other attachments:
List any additional information to be attached as Appendix B, C, D, etc. Label and staple the attachments to the end of this SPCC plan.

Appendix A: Site Map
Appendix B: Emergency Response Posting
Appendix C: SPCC Cross-Reference
Appendix D: _____

Appendix C: SPCC Cross Reference

40 CFR Provision	Description	SPCC Plan Page
112.3 (d)	Professional Engineer Certification	1
112.3 (e)	Location of SPCC Plan	1
112.5	5-Year Plan Review	1
112.7	Management/EPA Approval	1
112.7 (a) (3)	I. Facility Information	2
112.7 (a) (3)	III. Facility Description	3
112.7 (a) (4)	II. a. Site Assessment	2
112.7 (a) (5)	Location of Plan	1
112.7 (b)	V. Potential Spill Volumes and Rates	5
112.7 (b)	VI. b. Description of where a spill would go	6
112.7 (c)	VI. a. Spill Prevention	5
112.7 (d)	N/A	
112.7 (e)	VII. Facility Inspections	6
112.7 (e)	VIII. Record Keeping	7
112.7 (e)	IX. Maintenance Inspections	8
112.7 (f)	VI. a. Spill Prevention	5
112.7 (f)	N/A	
112.7 (g)	VI. d. Security	4
112.7 (h)	N/A	
112.8 (b)	N/A	
112.8 (c) (1)	III. a. b. Fixed Storage – Non-Fixed Storage	3/4
112.8 (c) (2)	III. a. b. Fixed Storage – Non-Fixed Storage	3/4
112.8 (c) (3)	N/A	
112.8 (c) (4)	III. a. Fixed Storage	3
112.8 (c) (5)	III. a. Fixed Storage	3
112.8 (c) (6)	VII. Facility Inspections; VIII. Record Keeping	7
112.8 (c) (7)	N/A	
112.8 (c) (8)	VI. a. Spill Prevention	5
112.8 (c) (9)	N/A	
112.8 (c) (10)	VI. c. Spill Response	6
112.8 (c) (11)	IV. e. Non-Fixed Storage	4
112.8 (d)	VII. A. Routine Inspections	7

STANDARD BMP DETAILS
W/ INSTALLATION AND MAINTENANCE REQUIREMENTS

CLASSIC SM
CONSULTING
ENGINEERS & SURVEYORS

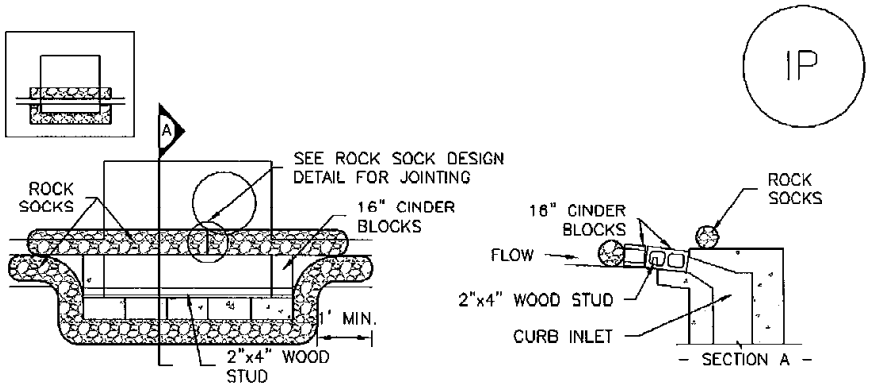

IP-1. BLOCK AND ROCK SOCK SUMP OR ON GRADE INLET PROTECTION

BLOCK AND CURB SOCK INLET PROTECTION INSTALLATION NOTES

1. SEE ROCK SOCK DESIGN DETAIL FOR INSTALLATION REQUIREMENTS.

2. CONCRETE "CINDER" BLOCKS SHALL BE LAID ON THEIR SIDES AROUND THE INLET IN A SINGLE ROW, ABUTTING ONE ANOTHER WITH THE OPEN END FACING AWAY FROM THE CURB.

3. GRAVEL BAGS SHALL BE PLACED AROUND CONCRETE BLOCKS, CLOSELY ABUTTING ONE ANOTHER AND JOINTED TOGETHER IN ACCORDANCE WITH ROCK SOCK DESIGN DETAIL.

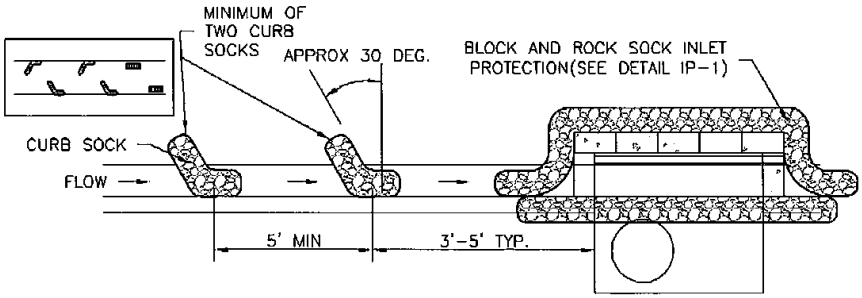

IP-2. CURB ROCK SOCKS UPSTREAM OF INLET PROTECTION

CURB ROCK SOCK INLET PROTECTION INSTALLATION NOTES

1. SEE ROCK SOCK DESIGN DETAIL INSTALLATION REQUIREMENTS.

2. PLACEMENT OF THE SOCK SHALL BE APPROXIMATELY 30 DEGREES FROM PERPENDICULAR IN THE OPPOSITE DIRECTION OF FLOW.

3. SOCKS ARE TO BE FLUSH WITH THE CURB AND SPACED A MINIMUM OF 5 FEET APART.

4. AT LEAST TWO CURB SOCKS IN SERIES ARE REQUIRED UPSTREAM OF ON-GRADE INLETS.

CLASSIC CONSULTING ENGINEERS & SURVEYORS

GENERAL INLET PROTECTION INSTALLATION NOTES

1. SEE PLAN VIEW FOR:
   -LOCATION OF INLET PROTECTION.
   -TYPE OF INLET PROTECTION (IP.1, IP.2, IP.3, IP.4, IP.5, IP.6)

2. INLET PROTECTION SHALL BE INSTALLED PROMPTLY AFTER INLET CONSTRUCTION OR PAVING IS COMPLETE (TYPICALLY WITHIN 48 HOURS). IF A RAINFALL/RUNOFF EVENT IS FORECAST, INSTALL INLET PROTECTION PRIOR TO ONSET OF EVENT.

3. MANY JURISDICTIONS HAVE BMP DETAILS THAT VARY FROM UDFCD STANDARD DETAILS. CONSULT WITH LOCAL JURISDICTIONS AS TO WHICH DETAIL SHOULD BE USED WHEN DIFFERENCES ARE NOTED.

INLET PROTECTION MAINTENANCE NOTES

1. INSPECT BMPs EACH WORKDAY, AND MAINTAIN THEM IN EFFECTIVE OPERATING CONDITION. MAINTENANCE OF BMPs SHOULD BE PROACTIVE, NOT REACTIVE. INSPECT BMPs AS SOON AS POSSIBLE (AND ALWAYS WITHIN 24 HOURS) FOLLOWING A STORM THAT CAUSES SURFACE EROSION, AND PERFORM NECESSARY MAINTENANCE.

2. FREQUENT OBSERVATIONS AND MAINTENANCE ARE NECESSARY TO MAINTAIN BMPs IN EFFECTIVE OPERATING CONDITION. INSPECTIONS AND CORRECTIVE MEASURES SHOULD BE DOCUMENTED THOROUGHLY.

3. WHERE BMPs HAVE FAILED, REPAIR OR REPLACEMENT SHOULD BE INITIATED UPON DISCOVERY OF THE FAILURE.

4. SEDIMENT ACCUMULATED UPSTREAM OF INLET PROTECTION SHALL BE REMOVED AS NECESSARY TO MAINTAIN BMP EFFECTIVENESS, TYPICALLY WHEN STORAGE VOLUME REACHES 50% OF CAPACITY, A DEPTH OF 6" WHEN SILT FENCE IS USED, OR ¼ OF THE HEIGHT FOR STRAW BALES.

5. INLET PROTECTION IS TO REMAIN IN PLACE UNTIL THE UPSTREAM DISTURBED AREA IS PERMANENTLY STABILIZED, UNLESS THE LOCAL JURISDICTION APPROVES EARLIER REMOVAL OF INLET PROTECTION IN STREETS.

6. WHEN INLET PROTECTION AT AREA INLETS IS REMOVED, THE DISTURBED AREA SHALL BE COVERED WITH TOP SOIL, SEEDED AND MULCHED, OR OTHERWISE STABILIZED IN A MANNER APPROVED BY THE LOCAL JURISDICTION.

(DETAIL ADAPTED FROM TOWN OF PARKER, COLORADO AND CITY OF AURORA, COLORADO, NOT AVAILABLE IN AUTOCAD)

NOTE: MANY JURISDICTIONS HAVE BMP DETAILS THAT VARY FROM UDFCD STANDARD DETAILS. CONSULT WITH LOCAL JURISDICTIONS AS TO WHICH DETAIL SHOULD BE USED WHEN DIFFERENCES ARE NOTED.

NOTE: THE DETAILS INCLUDED WITH THIS FACT SHEET SHOW COMMONLY USED, CONVENTIONAL METHODS OF INLET PROTECTION IN THE DENVER METROPOLITAN AREA. THERE ARE MANY PROPRIETARY INLET PROTECTION METHODS ON THE MARKET. UDFCD NEITHER ENDORSES NOR DISCOURAGES USE OF PROPRIETARY INLET PROTECTION; HOWEVER, IN THE EVENT PROPRIETARY METHODS ARE USED, THE APPROPRIATE DETAIL FROM THE MANUFACTURER MUST BE INCLUDED IN THE SWMP AND THE BMP MUST BE INSTALLED AND MAINTAINED AS SHOWN IN THE MANUFACTURER'S DETAILS.

NOTE: SOME MUNICIPALITIES DISCOURAGE OR PROHIBIT THE USE OF STRAW BALES FOR INLET PROTECTION. CHECK WITH LOCAL JURISDICTION TO DETERMINE IF STRAW BALE INLET PROTECTION IS ACCEPTABLE.

CLASSIC CONSULTING ENGINEERS & SURVEYORS

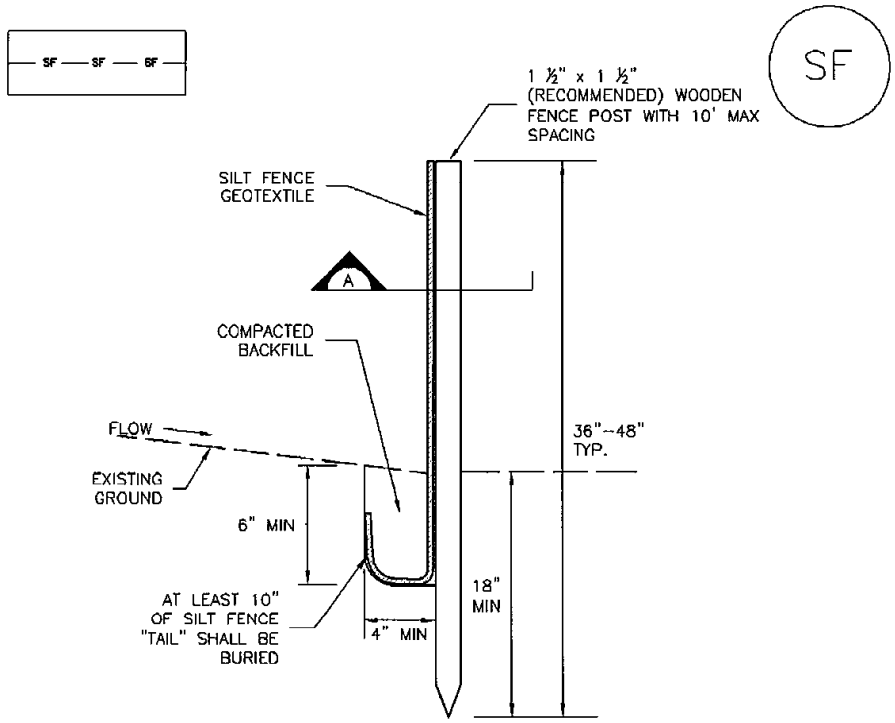

SILT FENCE

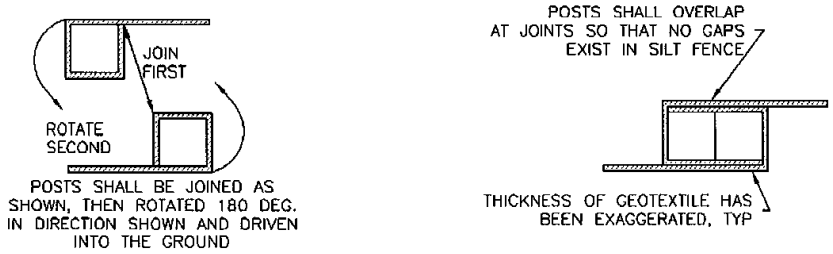

SECTION A

SF–1. SILT FENCE

CLASSIC CONSULTING ENGINEERS & SURVEYORS

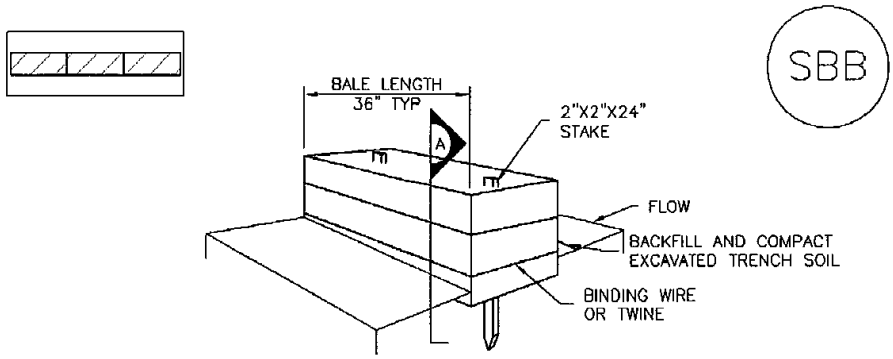

STRAW BALE

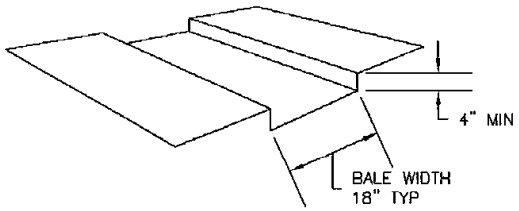

TRENCH FOR STRAW BALE

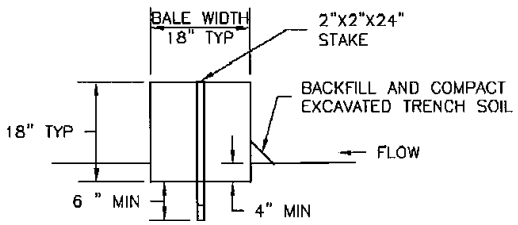

SECTION A

SBB-1. STRAW BALE

CLASSIC SM
CONSULTING
ENGINEERS & SURVEYORS

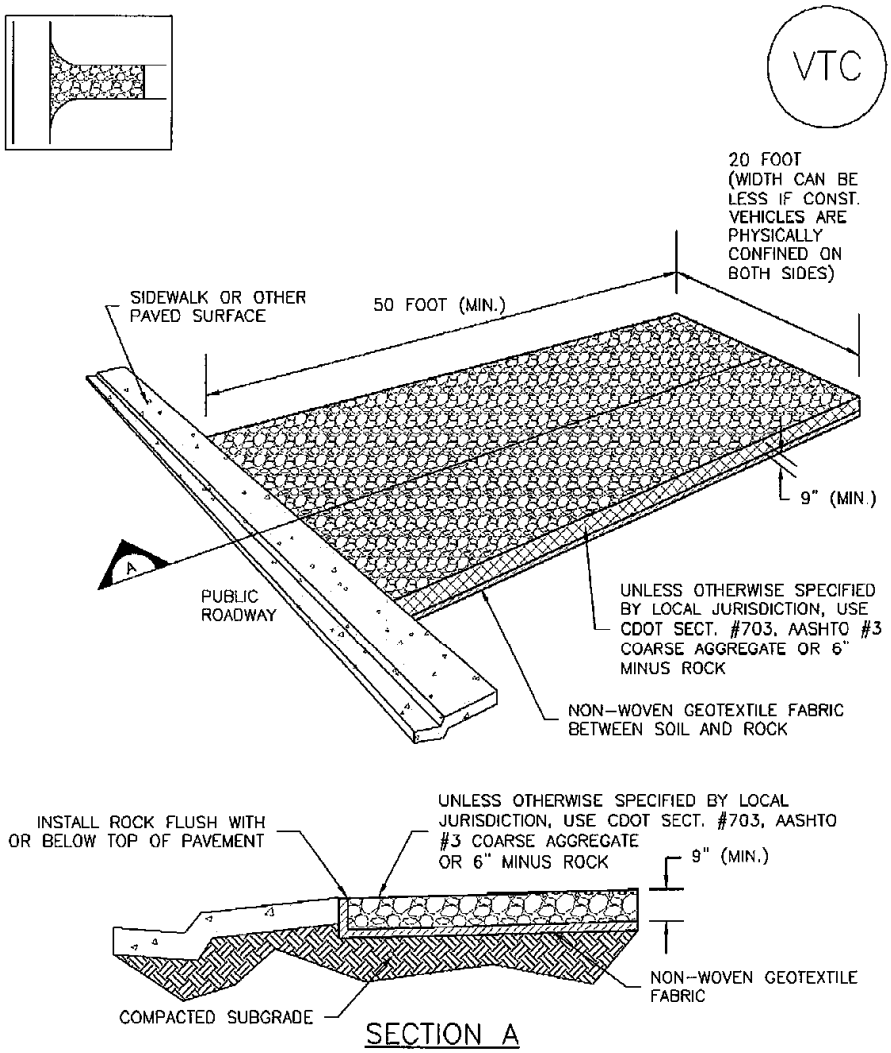

VTC-1. AGGREGATE VEHICLE TRACKING CONTROL

CLASSIC SM
CONSULTING
ENGINEERS & SURVEYORS

SITE MAP/ EROSION AND STORMWATER QUALITY CONTROL PLAN

CLASSIC SM
CONSULTING
ENGINEERS & SURVEYORS

FLYING HORSE NORTH FILING NO. 1

COUNTY OF EL PASO, STATE OF COLORADO

GRADING AND EROSION CONTROL PLAN

DECEMBER 2017

EL PASO COUNTY GRADING AND EROSION CONTROL NOTES:

1. CONSTRUCTION MAY NOT COMMENCE UNTIL A CONSTRUCTION PERMIT IS OBTAINED FROM PLANING AND COMMUNITY DEVELOPMENT (PCD) AND A PRE-CONSTRUCTION CONFERENCE IS HELD WITH PCD – INSPECTIONS.
2. STORMWATER DISCHARGES FROM CONSTRUCTION SITES SHALL NOT CAUSE OR THREATEN TO CAUSE POLLUTION, CONTAMINATION, OR DEGRADATION OF STATE WATERS. ALL WORK AND EARTH DISTURBANCE SHALL BE DONE IN A MANNER THAT MINIMIZES POLLUTION OF ANY ON-SITE OR OFF SITE WATERS, INCLUDING WETLANDS.
3. NOTWITHSTANDING ANYTHING DEPICTED IN THESE PLANS IN WORDS OR GRAPHIC REPRESENTATION, ALL DESIGN AND CONSTRUCTION RELATED TO ROADS, STORM DRAINAGE AND EROSION CONTROL SHALL CONFORM TO THE STANDARDS AND REQUIREMENTS OF THE MOST RECENT VERSION OF THE RELEVANT ADOPTED EL PASO COUNTY STANDARDS, INCLUDING THE LAND DEVELOPMENT CODE, THE ENGINEERING CRITERIA MANUAL, THE DRAINAGE CRITERIA MANUAL, AND THE DRAINAGE CRITERIA MANUAL VOLUME 2. ANY DEVIATIONS TO REGULATIONS AND STANDARDS MUST BE REQUESTED, AND APPROVED, IN WRITING.
4. A SEPARATE STORMWATER MANAGEMENT PLAN (SWMP) FOR THIS PROJECT SHALL BE COMPLETED AND AN EROSION AND STORMWATER QUALITY CONTROL PERMIT (ESQCP) ISSUED PRIOR TO COMMENCING CONSTRUCTION. DURING CONSTRUCTION THE SWMP IS THE RESPONSIBILITY OF THE DESIGNATED STORMWATER MANAGER, SHALL BE LOCATED ON SITE AT ALL TIMES AND SHALL BE KEPT UP TO DATE WITH WORK PROGRESS AND CHANGES IN THE FIELD.
5. ONCE THE ESQCP HAS BEEN ISSUED, THE CONTRACTOR MAY INSTALL THE INITIAL STAGE EROSION AND SEDIMENT CONTROL BMPS AS INDICATED ON THE GEC. A PRE-CONSTRUCTION MEETING BETWEEN THE CONTRACTOR, ENGINEER, AND EL PASO COUNTY WILL BE HELD PRIOR TO ANY CONSTRUCTION. IT IS THE RESPONSIBILITY OF THE APPLICANT TO COORDINATE THE MEETING TIME AND PLACE WITH COUNTY PCD INSPECTIONS STAFF.
6. SOIL EROSION CONTROL MEASURES FOR ALL SLOPES, CHANNELS, DITCHES, OR ANY DISTURBED LAND AREA SHALL BE COMPLETED WITHIN 21 CALENDAR DAYS AFTER FINAL GRADING, OR FINAL EARTH DISTURBANCE, HAS BEEN COMPLETED. DISTURBED AREAS AND STOCKPILES WHICH ARE NOT AT FINAL GRADE BUT WILL REMAIN DORMANT FOR LONGER THAN 30 DAYS SHALL ALSO BE MULCHED WITHIN 21 DAYS AFTER INTERIM GRADING. AN AREA THAT IS GOING TO REMAIN IN AN INTERIM STATE FOR MORE THAN 60 DAYS SHALL ALSO BE SEEDED. ALL TEMPORARY SOIL EROSION CONTROL MEASURES AND BMPS SHALL BE MAINTAINED UNTIL PERMANENT SOIL EROSION CONTROL MEASURES ARE IMPLEMENTED AND ESTABLISHED.
7. TEMPORARY SOIL EROSION CONTROL FACILITIES SHALL BE REMOVED AND EARTH DISTURBANCE AREAS GRADED AND STABILIZED WITH PERMANENT SOIL EROSION CONTROL MEASURES PURSUANT TO STANDARDS AND SPECIFICATION PRESCRIBED IN THE DCM VOLUME II AND THE ENGINEERING CRITERIA MANUAL (ECM) APPENDIX I.
8. ALL PERSONS ENGAGED IN EARTH DISTURBANCE SHALL IMPLEMENT AND MAINTAIN ACCEPTABLE SOIL EROSION AND SEDIMENT CONTROL MEASURES INCLUDING BMPS IN CONFORMANCE WITH THE EROSION CONTROL TECHNICAL STANDARDS OF THE DRAINAGE CRITERIA MANUAL (DCM) VOLUME II AND IN ACCORDANCE WITH THE STORMWATER MANAGEMENT PLAN (SWMP).
9. ALL TEMPORARY EROSION CONTROL FACILITIES INCLUDING BMPS AND ALL PERMANENT FACILITIES INTENDED TO CONTROL EROSION OF ANY EARTH DISTURBANCE OPERATIONS, SHALL BE INSTALLED AS DEFINED IN THE APPROVED PLANS, THE SWMP AND THE DCM VOLUME II AND MAINTAINED THROUGHOUT THE DURATION OF THE EARTH DISTURBANCE OPERATION.
10. ANY EARTH DISTURBANCE SHALL BE CONDUCTED IN SUCH A MANNER SO AS TO EFFECTIVELY REDUCE ACCELERATED SOIL EROSION AND RESULTING SEDIMENTATION. ALL DISTURBANCES SHALL BE DESIGNED, CONSTRUCTED, AND COMPLETED SO THAT THE EXPOSED AREA OF ANY DISTURBED LAND SHALL BE LIMITED TO THE SHORTEST PRACTICAL PERIOD OF TIME.
11. ANY TEMPORARY OR PERMANENT FACILITY DESIGNED AND CONSTRUCTED FOR THE CONVEYANCE OF STORMWATER AROUND, THROUGH, OR FROM THE EARTH DISTURBANCE AREA SHALL BE DESIGNED TO LIMIT THE DISCHARGE TO A NON-EROSIVE VELOCITY.
12. CONCRETE WASH WATER SHALL BE CONTAINED AND DISPOSED OF IN ACCORDANCE WITH THE SWMP. NO WASH WATER SHALL BE DISCHARGED TO OR ALLOWED TO RUNOFF TO STATE WATERS, INCLUDING ANY SURFACE OR SUBSURFACE STORM DRAINAGE SYSTEM OR FACILITIES.
13. EROSION CONTROL BLANKETING IS TO BE USED ON SLOPES STEEPER THAN 3:1.
14. BUILDING, CONSTRUCTION, EXCAVATION, OR OTHER WASTE MATERIALS SHALL NOT BE TEMPORARILY PLACED OR STORED IN THE STREET, ALLEY, OR OTHER PUBLIC WAY, UNLESS IN ACCORDANCE WITH AN APPROVED TRAFFIC CONTROL PLAN. BMP'S MAY BE REQUIRED BY EL PASO COUNTY ENGINEERING IF DEEMED NECESSARY, BASED ON SPECIFIC CONDITIONS AND CIRCUMSTANCES.
15. VEHICLE TRACKING OF SOILS AND CONSTRUCTION DEBRIS OFF-SITE SHALL BE MINIMIZED. MATERIALS TRACKED OFFSITE SHALL BE CLEANED UP AND PROPERLY DISPOSED OF IMMEDIATELY.
16. CONTRACTOR SHALL BE RESPONSIBLE FOR THE REMOVAL OF ALL WASTES FROM THE CONSTRUCTION SITE FOR DISPOSAL IN ACCORDANCE WITH LOCAL AND STATE REGULATORY REQUIREMENTS. NO CONSTRUCTION DEBRIS, TREE SLASH, BUILDING MATERIAL WASTES OR UNUSED BUILDING MATERIALS SHALL BE BURIED, DUMPED, OR DISCHARGED AT THE SITE.
17. THE OWNER, SITE DEVELOPER, CONTRACTOR, AND/OR THEIR AUTHORIZED AGENTS SHALL BE RESPONSIBLE FOR THE REMOVAL OF ALL CONSTRUCTION DEBRIS, DIRT, TRASH, ROCK, SEDIMENT, AND SAND THAT MAY ACCUMULATE IN THE STORM SEWER OR OTHER DRAINAGE CONVEYANCE SYSTEM AND STORMWATER APPURTENANCES AS A RESULT OF SITE DEVELOPMENT.
18. THE QUANTITY OF MATERIALS STORED ON THE PROJECT SITE SHALL BE LIMITED, AS MUCH AS PRACTICAL, TO THAT QUANTITY REQUIRED TO PERFORM THE WORK IN AN ORDERLY SEQUENCE. ALL MATERIALS STORED ON-SITE SHALL BE STORED IN A NEAT, ORDERLY MANNER, IN THEIR ORIGINAL CONTAINERS, WITH ORIGINAL MANUFACTURER'S LABELS.
19. NO CHEMICALS ARE TO BE USED BY THE CONTRACTOR, WHICH HAVE THE POTENTIAL TO BE RELEASED IN STORMWATER UNLESS PERMISSION FOR THE USE OF A SPECIFIC CHEMICAL IS GRANTED IN WRITING BY THE ECM ADMINISTRATOR. IN GRANTING THE USE OF SUCH CHEMICALS, SPECIAL CONDITIONS AND MONITORING MAY BE REQUIRED.
20. BULK STORAGE STRUCTURES FOR PETROLEUM PRODUCTS AND OTHER CHEMICALS SHALL HAVE ADEQUATE PROTECTION SO AS TO CONTAIN ALL SPILLS AND PREVENT ANY SPILLED MATERIAL FROM ENTERING STATE WATERS, INCLUDING ANY SURFACE OR SUBSURFACE STORM DRAINAGE SYSTEM OR FACILITIES.
21. NO PERSON SHALL CAUSE THE IMPEDIMENT OF STORMWATER FLOW IN THE FLOW LINE OF THE CURB AND GUTTER OR IN THE DITCHLINE.
22. INDIVIDUALS SHALL COMPLY WITH THE 'COLORADO WATER QUALITY CONTROL ACT' (TITLE 25, ARTICLE 8, CRS), AND THE 'CLEAN WATER ACT' (33 USC 1344), IN ADDITION TO THE REQUIREMENTS INCLUDED IN THE DCM VOLUME II AND THE ECM APPENDIX I. ALL APPROPRIATE PERMITS MUST BE OBTAINED BY THE CONTRACTOR PRIOR TO CONSTRUCTION (NPDES, FLOODPLAIN, 404, FUGITIVE DUST, ETC.). IN THE EVENT OF CONFLICTS BETWEEN THESE REQUIREMENTS AND LAWS, RULES, OR REGULATIONS OF OTHER FEDERAL, STATE, OR COUNTY AGENCIES, THE MORE RESTRICTIVE LAWS, RULES, OR REGULATIONS SHALL APPLY.
23. ALL CONSTRUCTION TRAFFIC MUST ENTER/EXIT THE SITE AT APPROVED CONSTRUCTION ACCESS POINTS.
24. PRIOR TO ACTUAL CONSTRUCTION THE PERMITEE SHALL VERIFY THE LOCATION OF EXISTING UTILITIES.
25. A WATER SOURCE SHALL BE AVAILABLE ON SITE DURING EARTHWORK OPERATIONS AND UTILIZED AS REQUIRED TO MINIMIZE DUST FROM EARTHWORK EQUIPMENT AND WIND.
26. THE SOILS REPORT FOR THIS SITE HAS BEEN PREPARED BY ENTECH ENGINEERING, INC., TITLED "SOILS, GEOLOGY, GEOLOGIC HAZARD AND WASTEWATER STUDY...FLYING HORSE NORTH PUD SUBMITTAL", DATED FEBRUARY 22, 2016, AND SHALL BE CONSIDERED A PART OF THESE PLANS.
27. AT LEAST TEN DAYS PRIOR TO THE ANTICIPATED START OF CONSTRUCTION, FOR PROJECTS THAT WILL DISTURB 1 ACRE OR MORE, THE OWNER OR OPERATOR OF CONSTRUCTION ACTIVITY SHALL SUBMIT A PERMIT APPLICATION FOR STORMWATER DISCHARGE TO THE COLORADO DEPARTMENT OF PUBLIC HEALTH AND ENVIRONMENT, WATER QUALITY DIVISION. THE APPLICATION CONTAINS CERTIFICATION OF COMPLETION OF A STORMWATER MANAGEMENT PLAN (SWMP), OF WHICH THIS GRADING AND EROSION CONTROL PLAN MAY BE A PART. FOR INFORMATION OR APPLICATION MATERIALS CONTACT:

    COLORADO DEPARTMENT OF PUBLIC HEALTH AND ENVIRONMENT
    WATER QUALITY CONTROL DIVISION
    WQCD – PERMITS
    4300 CHERRY CREEK DRIVE SOUTH
    DENVER, CO 80246-1530
    ATTN: PERMITS UNIT

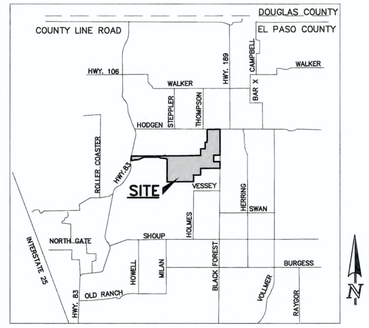

VICINITY MAP

N.T.S.

STANDARD NOTES FOR EL PASO COUNTY CONSTRUCTION PLANS:

1. ALL DRAINAGE AND ROADWAY CONSTRUCTION SHALL MEET THE STANDARDS AND SPECIFICATIONS OF THE CITY OF COLORADO SPRINGS/EL PASO COUNTY DRAINAGE CRITERIA MANUAL, VOLUMES 1 AND 2, AND THE EL PASO COUNTY ENGINEERING CRITERIA MANUAL.
2. CONTRACTOR SHALL BE RESPONSIBLE FOR THE NOTIFICATION AND FIELD NOTIFICATION OF ALL EXISTING UTILITIES, WHETHER SHOWN ON THE PLANS OR NOT, BEFORE BEGINNING CONSTRUCTION. LOCATION OF EXISTING UTILITIES SHALL BE VERIFIED BY THE CONTRACTOR PRIOR TO CONSTRUCTION. CALL 811 TO CONTACT THE UTILITY NOTIFICATION CENTER OF COLORADO (UNCC).
3. CONTRACTOR SHALL KEEP A COPY OF THESE APPROVED PLANS, THE GRADING AND EROSION CONTROL PLAN, THE STORMWATER MANAGEMENT PLAN (SWMP), THE SOILS AND GEOTECHNICAL REPORT, AND THE APPROPRIATE DESIGN AND CONSTRUCTION STANDARDS AND SPECIFICATIONS AT THE JOB SITE AT ALL TIMES, INCLUDING THE FOLLOWING:
    a. EL PASO COUNTY ENGINEERING CRITERIA MANUAL (ECM)
    b. CITY OF COLORADO SPRINGS/EL PASO COUNTY DRAINAGE CRITERIA MANUAL, VOLUMES 1 AND 2
    c. COLORADO DEPARTMENT OF TRANSPORTATION (CDOT) STANDARD SPECIFICATIONS FOR ROAD AND BRIDGE CONSTRUCTION
    d. CDOT M & S STANDARDS
4. NOTWITHSTANDING ANYTHING DEPICTED IN THESE PLANS IN WORDS OR GRAPHIC REPRESENTATION, ALL DESIGN AND CONSTRUCTION RELATED TO ROADS, STORM DRAINAGE AND EROSION CONTROL SHALL CONFORM TO THE STANDARDS AND REQUIREMENTS OF THE MOST RECENT VERSION OF THE RELEVANT ADOPTED EL PASO COUNTY STANDARDS, INCLUDING THE LAND DEVELOPMENT CODE, THE ENGINEERING CRITERIA MANUAL, THE DRAINAGE CRITERIA MANUAL, AND THE DRAINAGE CRITERIA MANUAL VOLUME 2. ANY DEVIATIONS FROM REGULATIONS AND STANDARDS MUST BE REQUESTED, AND APPROVED, IN WRITING. ANY MODIFICATIONS NECESSARY TO MEET CRITERIA AFTER-THE-FACT WILL BE ENTIRELY THE DEVELOPER'S RESPONSIBILITY TO RECTIFY.
5. IT IS THE DESIGN ENGINEER'S RESPONSIBILITY TO ACCURATELY SHOW EXISTING CONDITIONS, BOTH ONSITE AND OFFSITE, ON THE CONSTRUCTION PLANS. ANY MODIFICATIONS NECESSARY DUE TO CONFLICTS, OMISSIONS, OR CHANGED CONDITIONS WILL BE ENTIRELY THE DEVELOPER'S RESPONSIBILITY TO RECTIFY.
6. CONTRACTOR SHALL SCHEDULE A PRE-CONSTRUCTION MEETING WITH EL PASO COUNTY PLANNING AND COMMUNITY DEVELOPMENT (PCD) – INSPECTIONS, PRIOR TO STARTING CONSTRUCTION.
7. IT IS THE CONTRACTOR'S RESPONSIBILITY TO UNDERSTAND THE REQUIREMENTS OF ALL JURISDICTIONAL AGENCIES AND TO OBTAIN ALL REQUIRED PERMITS, INCLUDING BUT NOT LIMITED TO EL PASO COUNTY EROSION AND STORMWATER QUALITY CONTROL PERMIT (ESQCP), REGIONAL BUILDING FLOODPLAIN DEVELOPMENT PERMIT, U.S. ARMY CORPS OF ENGINEERS-ISSUED 401 AND/OR 404 PERMITS, AND COUNTY AND STATE FUGITIVE DUST PERMITS.
8. CONTRACTOR SHALL NOT DEVIATE FROM THE PLANS WITHOUT FIRST OBTAINING WRITTEN APPROVAL FROM THE DESIGN ENGINEER AND DSD. CONTRACTOR SHALL NOTIFY THE DESIGN ENGINEER IMMEDIATELY UPON DISCOVERY OF ANY ERRORS OR INCONSISTENCIES.
9. ALL STORM DRAIN PIPE SHALL BE CLASS III RCP UNLESS OTHERWISE NOTED AND APPROVED BY PCD.
10. CONTRACTOR SHALL COORDINATE GEOTECHNICAL TESTING PER ECM STANDARDS. PAVEMENT DESIGN SHALL BE APPROVED BY EL PASO COUNTY PCD PRIOR TO PLACEMENT OF CURB AND GUTTER AND PAVEMENT.
11. ALL CONSTRUCTION TRAFFIC MUST ENTER/EXIT THE SITE AT APPROVED CONSTRUCTION ACCESS POINTS.
12. SIGHT VISIBILITY TRIANGLES AS IDENTIFIED IN THE PLANS SHALL BE PROVIDED AT ALL INTERSECTIONS. OBSTRUCTIONS GREATER THAN 18 INCHES ABOVE FLOWLINE ARE NOT ALLOWED WITHIN SIGHT TRIANGLES.
13. SIGNING AND STRIPING SHALL COMPLY WITH EL PASO COUNTY DOT AND MUTCD CRITERIA. [IF APPLICABLE, ADDITIONAL SIGNING AND STRIPING NOTES WILL BE PROVIDED.]
14. CONTRACTOR SHALL OBTAIN ANY PERMITS REQUIRED BY EL PASO COUNTY DOT, INCLUDING WORK WITHIN THE RIGHT-OF-WAY AND SPECIAL TRANSPORT PERMITS.
15. THE LIMITS OF CONSTRUCTION SHALL REMAIN WITHIN THE PROPERTY LINE UNLESS OTHERWISE NOTED. THE OWNER/DEVELOPER SHALL OBTAIN WRITTEN PERMISSION AND EASEMENTS, WHERE REQUIRED, FROM ADJOINING PROPERTY OWNER(S) PRIOR TO ANY OFF-SITE DISTURBANCE, GRADING, OR CONSTRUCTION.

AGENCIES:

OWNER/DEVELOPER:	PRI #2 LLC C/O ELITE PROPERTIES OF AMERICA 6385 CORPORATE DRIVE, SUITE 200 COLORADO SPRINGS, CO 80919 MR. DREW BALSICK (719) 592-9333
CIVIL ENGINEER:	CLASSIC CONSULTING ENGINEERS & SURVEYORS 619 N. CASCADE AVENUE, SUITE 200 COLORADO SPRINGS, CO 80903 MR. MARC A. WHORTON P.E. (719) 785-0790
COUNTY ENGINEERING:	EL PASO COUNTY, DEVELOPMENT SERVICES 2880 INTERNATIONAL CIRCLE COLORADO SPRINGS, COLORADO 80910 MR. GILBERT LAFORCE, (719) 520-6813
FIRE DISTRICT:	DONALD WESCOTT FIRE PROTECTION DISTRICT 15415 GLENEAGLE DRIVE COLORADO SPRINGS, CO 80921 CHIEF VINNY BURNS, (719) 488-8680
FIRE DISTRICT:	BLACK FOREST FIRE PROTECTION DISTRICT 11445 TEACHOUT ROAD COLORADO SPRINGS, CO 80908 CHIEF BRYAN JACK, (719) 495-4300
GAS COMPANY:	BLACKHILLS ENERGY 37 WIDEFIELD BOULEVARD WIDEFIELD, COLORADO 80911 MR. GEORGE M. PETERSON, (719) 392-3491
ELECTRIC COMPANY:	MOUNTAIN VIEW ELECTRIC P.O. BOX 1600 LIMON, COLORADO 80828 MR. LES ULFERS, (719) 495-2283
TELEPHONE COMPANY:	CENTURY LINK (LOCATORS) 811 AT & T (LOCATORS) 811

SHEET INDEX

TITLE SHEET:
SHEET 1 OF 10

INDEX SHEET:
SHEET 2 OF 10

OVERLOT GRADING PLAN INCLUDING EROSION CONTROL:
SHEET 3 OF 10 – SHEET 9 OF 10

GRADING AND EROSION CONTROL DETAILS:
SHEET 10 OF 10

APPROVALS:

DESIGN ENGINEER'S STATEMENT:

THIS GRADING AND EROSION CONTROL PLAN WAS PREPARED UNDER MY DIRECTION AND SUPERVISION AND IS CORRECT TO THE BEST OF MY KNOWLEDGE AND BELIEF. SAID PLAN HAS BEEN PREPARED ACCORDING TO THE CRITERIA ESTABLISHED BY THE COUNTY FOR GRADING AND EROSION CONTROL PLANS. I ACCEPT RESPONSIBILITY FOR ANY LIABILITY CAUSED BY ANY NEGLIGENT ACTS, ERRORS, OR OMISSIONS ON MY PART IN PREPARING THIS PLAN.

MARC A WHORTON, COLORADO P.E. #37155
FOR AND ON THE BEHALF OF CLASSIC CONSULTING ENGINEERS & SURVEYORS

DATE 6/14/18

OWNER/DEVELOPER STATEMENT:

I, THE OWNER/DEVELOPER HAVE READ AND WILL COMPLY WITH THE REQUIREMENTS OF THE GRADING AND EROSION CONTROL PLAN.

DREW BALSICK, VICE PRESIDENT
PRI #2 LLC C/O ELITE PROPERTIES OF AMERICA

DATE 9-18-18

EL PASO COUNTY:

COUNTY PLAN REVIEW IS PROVIDED ONLY FOR GENERAL CONFORMANCE WITH COUNTY DESIGN CRITERIA. THE COUNTY IS NOT RESPONSIBLE FOR THE ACCURACY AND ADEQUACY OF THE DESIGN, DIMENSIONS, AND/OR ELEVATIONS WHICH SHALL BE CONFIRMED AT THE JOB SITE. THE COUNTY THROUGH THE APPROVAL OF THIS DOCUMENT ASSUMES NO RESPONSIBILITY FOR COMPLETENESS AND/OR ACCURACY OF THIS DOCUMENT.

FILED IN ACCORDANCE WITH THE REQUIREMENTS OF THE EL PASO COUNTY LAND DEVELOPMENT CODE, DRAINAGE CRITERIA MANUAL, VOLUMES 1 AND 2, AND ENGINEERING CRITERIA MANUAL AS AMENDED.

IN ACCORDANCE WITH ECM SECTION 1.12, THESE CONSTRUCTION DOCUMENTS WILL BE VALID FOR CONSTRUCTION FOR A PERIOD OF TWO YEARS FROM THE DATE SIGNED BY THE EL PASO COUNTY ENGINEER. IF CONSTRUCTION HAS NOT STARTED WITHIN THOSE TWO YEARS, THE PLANS WILL NEED TO BE RESUBMITTED FOR APPROVAL, INCLUDING PAYMENT OF REVIEW FEES AT THE PLANNING AND COMMUNITY DEVELOPMENT DIRECTORS DISCRETION.

JENNIFER IRVINE, P.E.
COUNTY ENGINEER / ECM ADMINISTRATOR

DATE

PCD FILE NO. SF-18-001

48 HOURS BEFORE YOU DIG,
CALL UTILITY LOCATORS
811
UTILITY NOTIFICATION CENTER OF COLORADO
IT'S THE LAW

THE LOCATIONS OF EXISTING UNDERGROUND UTILITIES ARE SHOWN IN AN APPROXIMATE WAY ONLY. THE CONTRACTOR SHALL DETERMINE THE EXACT LOCATION OF ALL EXISTING UTILITIES BEFORE COMMENCING WORK. THE CONTRACTOR SHALL BE FULLY RESPONSIBLE FOR ANY AND ALL DAMAGES WHICH MIGHT BE CAUSED BY HIS FAILURE TO EXACTLY LOCATE AND PRESERVE ANY AND ALL UNDERGROUND UTILITIES.

NO.	REVISION	DATE
1	REVISED PER COUNTY COMMENTS	7-29-16
2	UPDATE GRADING PLAN BASED ON FILING 1 DESIGN	12-12-17
3	REVISED PER COUNTY COMMENTS	3-16-18
4	REVISED PER COUNTY COMMENTS	6-7-18

REVIEW:

PREPARED UNDER MY DIRECT SUPERVISION FOR AND ON BEHALF OF CLASSIC CONSULTING ENGINEERS AND SURVEYORS, LLC

MARC A. WHORTON, COLORADO P.E. #37155

DATE 6/14/18

CLASSIC CONSULTING ENGINEERS & SURVEYORS
619 N. Cascade Avenue, Suite 200
Colorado Springs, Colorado 80903
(719)785-0790
(719)785-0799(Fax)

FLYING HORSE NORTH FILING NO. 1
GRADING AND EROSION CONTROL PLAN

TITLE SHEET

DESIGNED BY	MAW	SCALE		DATE	12-12-17
DRAWN BY	RTT	(H) 1"=	N/A	SHEET	1 OF 10
CHECKED BY		(V) 1"=	N/A	JOB NO.	1096.11

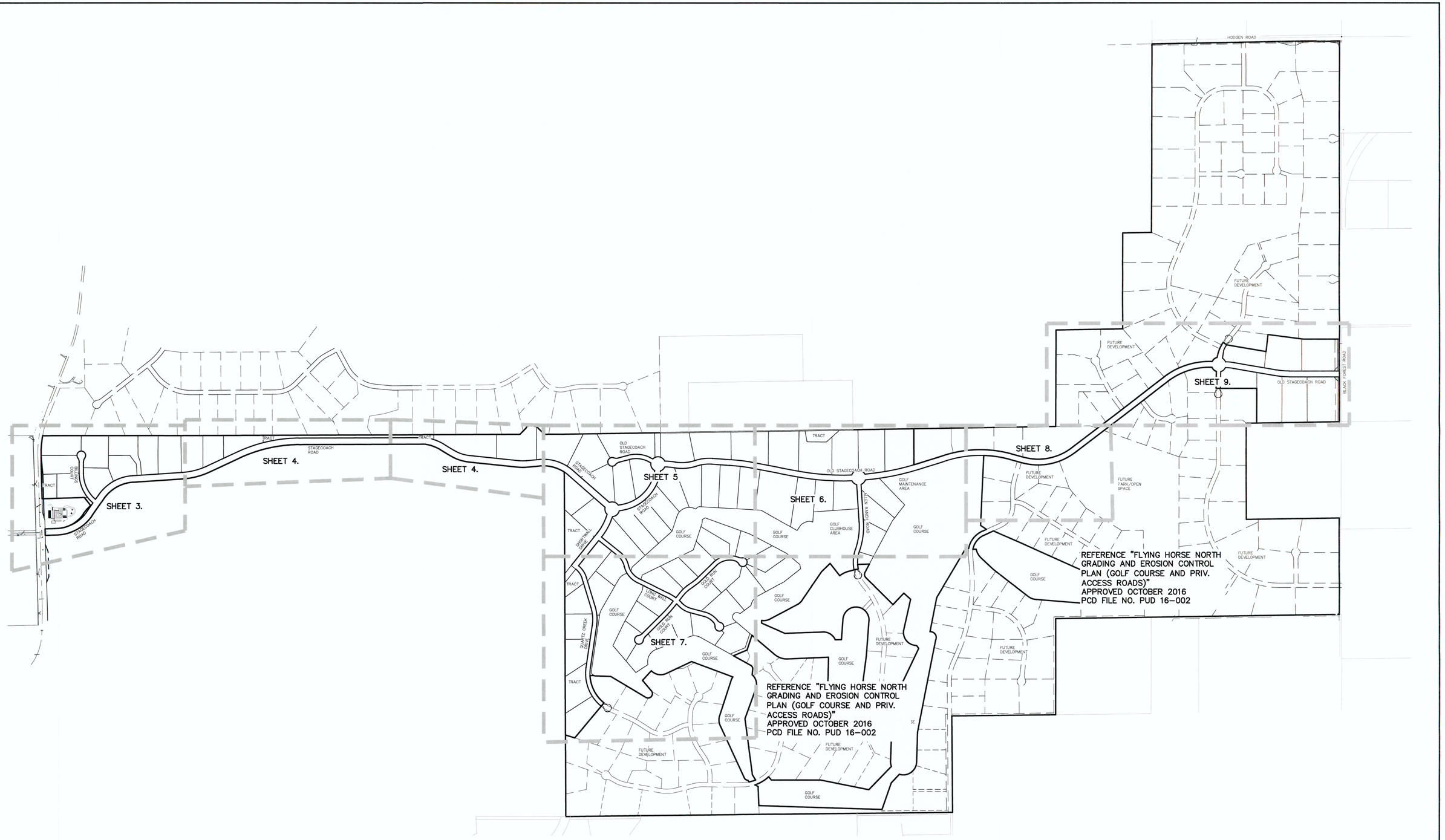

N

600 300 0 600 1200

SCALE: 1" = 600'

48 HOURS BEFORE YOU DIG,
CALL UTILITY LOCATORS
811
UTILITY NOTIFICATION CENTER OF COLORADO
IT'S THE LAW

THE LOCATIONS OF EXISTING UNDERGROUND UTILITIES ARE SHOWN IN AN APPROXIMATE WAY ONLY. THE CONTRACTOR SHALL DETERMINE THE EXACT LOCATION OF ALL EXISTING UTILITIES BEFORE COMMENCING WORK. THE CONTRACTOR SHALL BE FULLY RESPONSIBLE FOR ANY AND ALL DAMAGES WHICH MIGHT BE CAUSED BY HIS FAILURE TO EXACTLY LOCATE AND PRESERVE ANY AND ALL UNDERGROUND UTILITIES.

NO.	REVISION	DATE
1	REVISED PER COUNTY COMMENTS	7-29-16
2	REVISED PER STAGECOACH ROW AND MILAM CHANGE	3-26-17
3	UPDATE GRADING PLAN PER FILING 1 DESIGN	12-12-17
4	REVISED PER COUNTY COMMENTS	3-16-18

REVIEW:

PREPARED UNDER MY DIRECT SUPERVISION FOR AND ON BEHALF OF CLASSIC CONSULTING, ENGINEERS AND SURVEYORS, LLC

COLORADO REGISTERED MARC ALAN WHORTON 37155 PROFESSIONAL ENGINEER

MARC A. WHORTON, COLORADO P.E. #37155 — DATE 6/14/18

CLASSIC CONSULTING ENGINEERS & SURVEYORS
619 N. Cascade Avenue, Suite 200
Colorado Springs, Colorado 80903
(719)785-0790
(719)785-0799(Fax)

FLYING HORSE NORTH FILING NO. 1 GRADING AND EROSION CONTROL PLAN

INDEX MAP

DESIGNED BY	MAW	SCALE	DATE	12/12/17
DRAWN BY	MAW	(H) 1"= 600'	SHEET 2	OF 10
CHECKED BY		(V) 1"= N/A	JOB NO.	1096.11

N:\1096\1\DRAWINGS\CONSTRUCTION\Final Grading Plan\1096\1-- GRADING 02.dwg, 3/28/2018 10:28:59 AM, 1:1

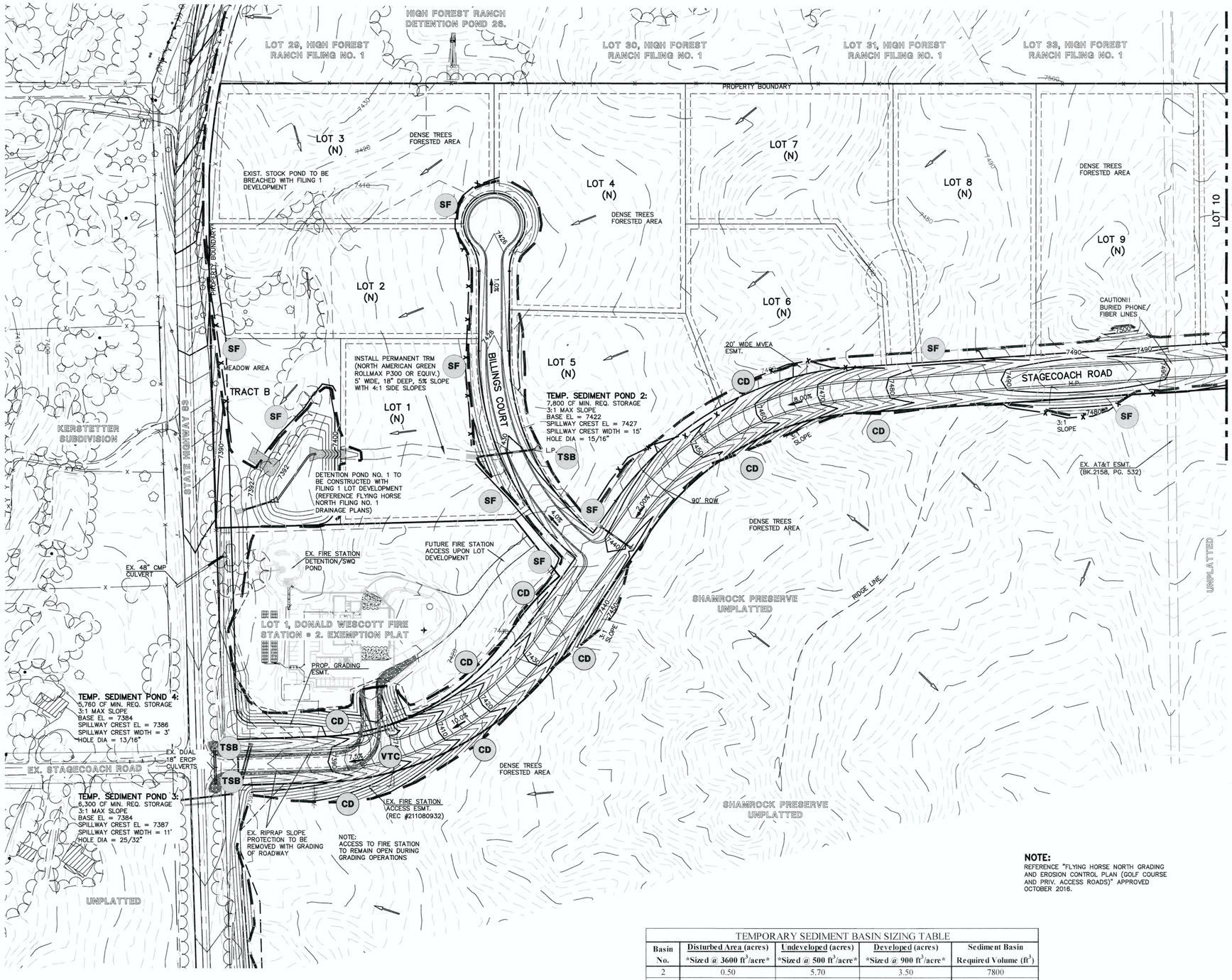

N

100 50 0 100 200

SCALE: 1" = 100'

NOTE:
REFERENCE "FLYING HORSE NORTH GRADING AND EROSION CONTROL PLAN (GOLF COURSE AND PRIV. ACCESS ROADS)" APPROVED OCTOBER 2016.

TEMPORARY SEDIMENT BASIN SIZING TABLE

Basin No.	Disturbed Area (acres) *Sized @ 3600 ft³/acre*	Undeveloped (acres) *Sized @ 500 ft³/acre*	Developed (acres) *Sized @ 900 ft³/acre*	Sediment Basin Required Volume (ft³)
2	0.50	5.70	3.50	7800
3	1.00	5.40	0.00	6300
4	1.50	0.00	0.40	5760

REFERENCE URBAN DRAINAGE VOLUME 3 SEDIMENT BASIN DESIGN (SEE SHEET 10 FOR DETAIL)

NOTES:

1. AT LEAST TEN DAYS PRIOR TO THE ANTICIPATED START OF CONSTRUCTION, FOR PROJECTS THAT WILL DISTURB 1 ACRE OR MORE (ONE ACRE OR MORE AFTER JULY 1, 2002), THE OWNER OR OPERATOR OF THE CONSTRUCTION ACTIVITY SHALL SUBMIT A PERMIT APPLICATION FOR STORMWATER DISCHARGE TO THE COLORADO DEPARTMENT OF PUBLIC HEALTH AND ENVIRONMENT, WATER QUALITY CONTROL DIVISION. THE APPLICATION CONTAINS CERTIFICATION OF COMPLETION OF A STORMWATER MANAGEMENT PLAN (SWMP), OF WHICH THIS GRADING AND EROSION CONTROL PLAN MAY BE A PART. FOR INFORMATION OR APPLICATION MATERIALS CONTACT:

   COLORADO DEPARTMENT OF PUBLIC HEALTH AND ENVIRONMENT
   WATER QUALITY CONTROL DIVISION
   WQCD – PERMITS
   4300 CHERRY CREEK DRIVE SOUTH
   DENVER, CO 80246-1530
   ATTN: PERMITS UNIT

2. ALL DISTURBED AREAS TO BE RESEEDED UPON COMPLETION OF OVERLOT GRADING AND EROSION CONTROL MEASURES HAVE BEEN INSTALLED OR WITHIN 60 DAYS, WHICHEVER IS LESS TIME.

LEGEND

- TSB — TEMPORARY SEDIMENT BASIN
- SF — SILT FENCE
- SBB — STRAW BALE SEDIMENT BARRIER
- VTC — VEHICLE TRACKING CONTROL
- CD — CHECK DAM
- 6600 — EXISTING GROUND CONTOUR
- 6600 — PROPOSED FINISHED CONTOUR
- FLOW DIRECTION
- EXISTING FLOW
- X — SILT FENCE
- STRAW BALES
- FILING BOUNDARY
- H.P. — HIGH POINT
- L.P — LOW POINT
- "A" — A LOT
- "B" — B LOT
- "WO" — WALKOUT LOT
- "T" — TRANSITION LOT
- "G" — GARDEN LOT
- x 43.39 — FG AT LOT LINE

48 HOURS BEFORE YOU DIG, CALL UTILITY LOCATORS
811
UTILITY NOTIFICATION CENTER OF COLORADO
IT'S THE LAW

THE LOCATIONS OF EXISTING UNDERGROUND UTILITIES ARE SHOWN IN AN APPROXIMATE WAY ONLY. THE CONTRACTOR SHALL DETERMINE THE EXACT LOCATION OF ALL EXISTING UTILITIES BEFORE COMMENCING WORK. THE CONTRACTOR SHALL BE FULLY RESPONSIBLE FOR ANY AND ALL DAMAGES WHICH MIGHT BE CAUSED BY HIS FAILURE TO EXACTLY LOCATE AND PRESERVE ANY AND ALL UNDERGROUND UTILITIES.

NO.	REVISION	DATE
1	REVISED PER COUNTY COMMENTS	7-21-16
2	REVISED PER COUNTY COMMENTS	9-12-16
3	REVISED PER 90' ROW FOR STAGECOACH RD.	3-1-17
4	REVISED GRADING TO MINIMIZE EARTHWORKS	7-17-17
5	UPDATE GRADING PLAN BASED ON FILING 1 DESIGN	12-12-17
6	REVISED PER COUNTY COMMENTS	3-16-18
7	REVISED PER COUNTY COMMENTS	7-10-18

REVIEW:

PREPARED UNDER MY DIRECT SUPERVISION FOR AND ON BEHALF OF CLASSIC CONSULTING ENGINEERS AND SURVEYORS, LLC

COLORADO REGISTERED PROFESSIONAL ENGINEER MARC ALAN WHORTON 37155

MARC A. WHORTON, COLORADO P.E. #37155

7/10/18
DATE

CLASSIC CONSULTING ENGINEERS & SURVEYORS
619 N. Cascade Avenue, Suite 200
Colorado Springs, Colorado 80903
(719)785-0790
(719)785-0799(Fax)

FLYING HORSE NORTH FILING NO. 1 GRADING AND EROSION CONTROL PLAN

DESIGNED BY	MAW	SCALE		DATE	12/12/17
DRAWN BY	MAW	(H) 1"= 100'		SHEET	3 OF 10
CHECKED BY		(V) 1"= N/A		JOB NO.	1096.11

N:\1096111 DRAWINGS\CONSTRUCTION\Final Grading Plan\10961 - GRADING 03.dwg, 7/10/2018 3:05:25 PM, 1:1

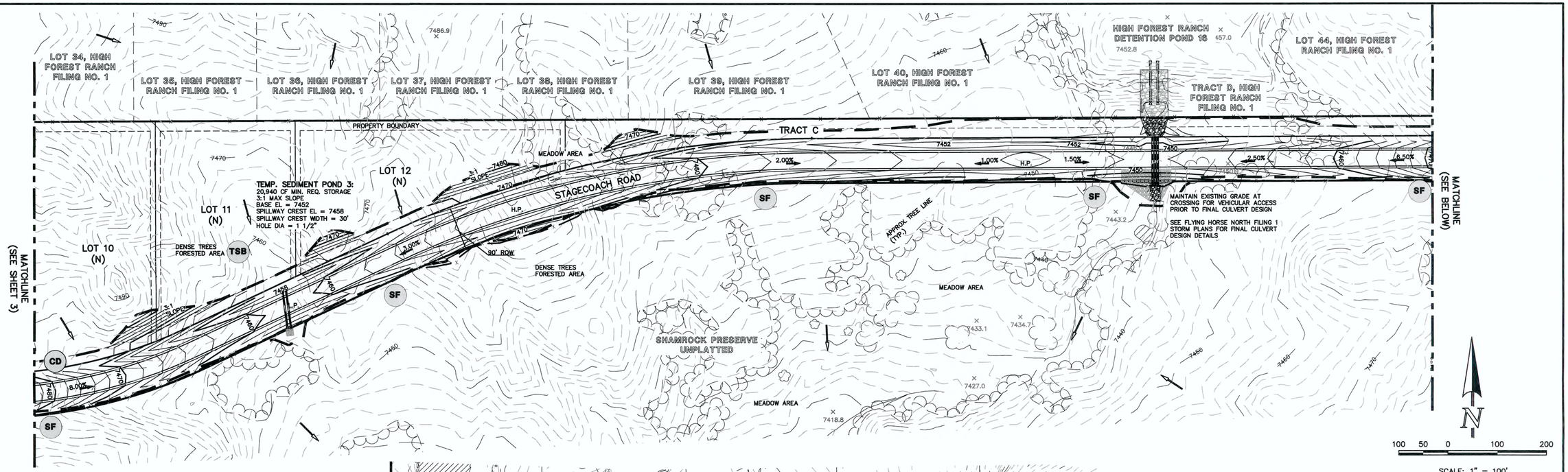

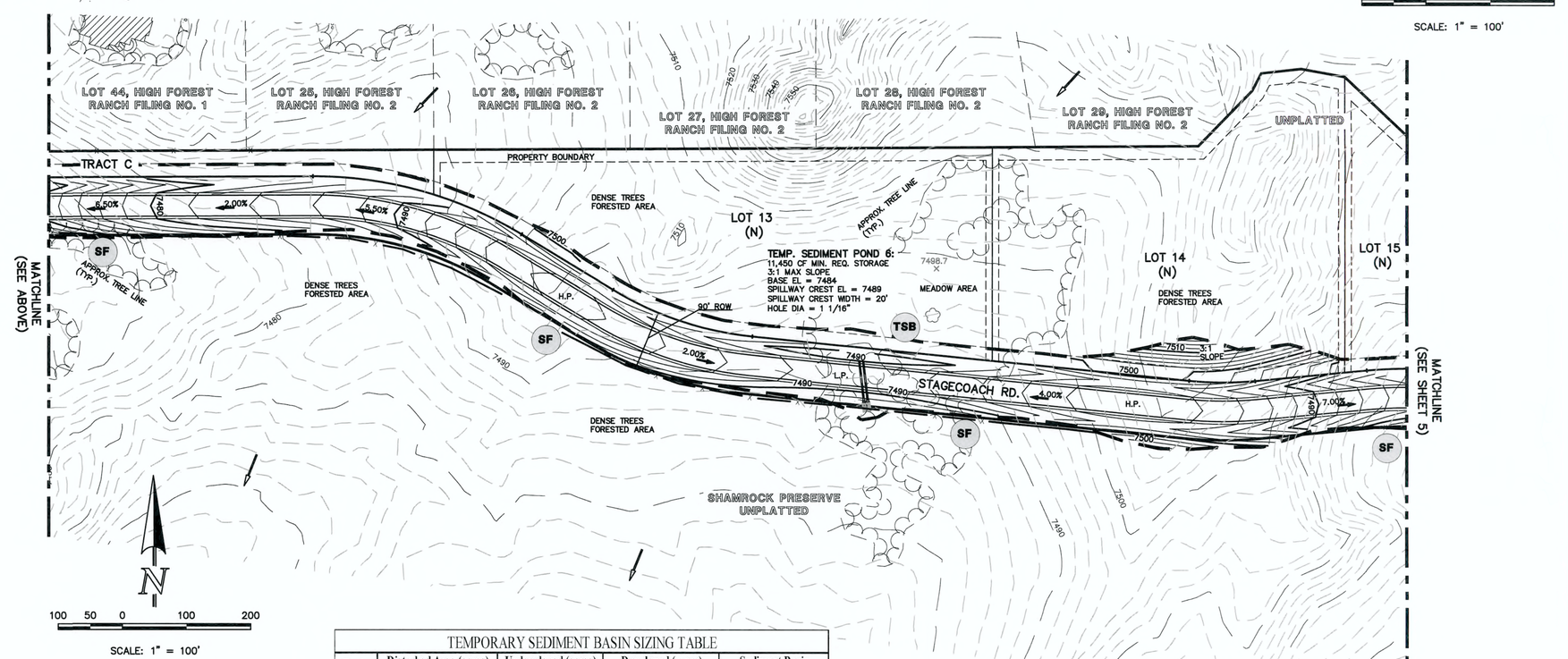

NOTES:

1. AT LEAST TEN DAYS PRIOR TO THE ANTICIPATED START OF CONSTRUCTION, FOR PROJECTS THAT WILL DISTURB 1 ACRE OR MORE (ONE ACRE OR MORE AFTER JULY 1, 2002), THE OWNER OR OPERATOR OF THE CONSTRUCTION ACTIVITY SHALL SUBMIT A PERMIT APPLICATION FOR STORMWATER DISCHARGE TO THE COLORADO DEPARTMENT OF PUBLIC HEALTH AND ENVIRONMENT, WATER QUALITY CONTROL DIVISION. THE APPLICATION CONTAINS CERTIFICATION OF COMPLETION OF A STORMWATER MANAGEMENT PLAN (SWMP), OF WHICH THIS GRADING AND EROSION CONTROL PLAN MAY BE A PART. FOR INFORMATION OR APPLICATION MATERIALS CONTACT:

   COLORADO DEPARTMENT OF PUBLIC
   HEALTH AND ENVIRONMENT
   WATER QUALITY CONTROL DIVISION
   WQCD - PERMITS
   4300 CHERRY CREEK DRIVE SOUTH
   DENVER, CO 80246-1530
   ATTN: PERMITS UNIT

2. ALL DISTURBED AREAS TO BE RESEEDED UPON COMPLETION OF OVERLOT GRADING AND EROSION CONTROL MEASURES HAVE BEEN INSTALLED OR WTHIN 60 DAYS, WHICHEVER IS LESS TIME.

LEGEND

- TSB — TEMPORARY SEDIMENT BASIN
- SF — SILT FENCE
- SBB — STRAW BALE SEDIMENT BARRIER
- VTC — VEHICLE TRACKING CONTROL
- CD — CHECK DAM
- 6600 — EXISTING GROUND CONTOUR
- 6600 — PROPOSED FINISHED CONTOUR
- FLOW DIRECTION
- EXISTING FLOW
- X — SILT FENCE
- STRAW BALES
- FILING BOUNDARY
- H.P. — HIGH POINT
- L.P. — LOW POINT
- "A" — A LOT
- "B" — B LOT
- "W/O" — WALKOUT LOT
- "T" — TRANSITION LOT
- "G" — GARDEN LOT
- x 43.39 — FG AT LOT LINE

TEMPORARY SEDIMENT BASIN SIZING TABLE

Basin No.	Disturbed Area (acres) *Sized @ 3600 ft^3/acre*	Undeveloped (acres) *Sized @ 500 ft^3/acre*	Developed (acres) *Sized @ 900 ft^3/acre*	Sediment Basin Required Volume (ft^3)
3	1.90	9.30	10.50	20940
6	1.00	6.70	5.00	11450

REFERENCE URBAN DRAINAGE VOLUME 3 SEDIMENT BASIN DESIGN (SEE SHEET 14 FOR DETAIL)

48 HOURS BEFORE YOU DIG, CALL UTILITY LOCATORS
811
UTILITY NOTIFICATION CENTER OF COLORADO
IT'S THE LAW

THE LOCATIONS OF EXISTING UNDERGROUND UTILITIES ARE SHOWN IN AN APPROXIMATE WAY ONLY. THE CONTRACTOR SHALL DETERMINE THE EXACT LOCATION OF ALL EXISTING UTILITIES BEFORE COMMENCING WORK. THE CONTRACTOR SHALL BE FULLY RESPONSIBLE FOR ANY AND ALL DAMAGES WHICH MIGHT BE CAUSED BY HIS FAILURE TO EXACTLY LOCATE AND PRESERVE ANY AND ALL UNDERGROUND UTILITIES.

NO.	REVISION	DATE
1	REVISED PER COUNTY COMMENTS	7-25-16
2	REVISED PER 90' ROW FOR STAGECOACH RD.	3-1-17
3	REVISED GRADING TO MINIMIZE EARTHWORKS	7-17-17
4	UPDATE GRADING PLAN PER FILING 1 DESIGN	12-12-17

REVIEW:

PREPARED UNDER MY DIRECT SUPERVISION FOR AND ON BEHALF OF CLASSIC CONSULTING ENGINEERS AND SURVEYORS, LLC

COLORADO REGISTERED MARC ALAN WHORTON 37155 PROFESSIONAL ENGINEER

MARC A. WHORTON, COLORADO P.E. #37155 — DATE 6/14/18

CLASSIC CONSULTING ENGINEERS & SURVEYORS
619 N. Cascade Avenue, Suite 200
Colorado Springs, Colorado 80903
(719)785-0790
(719)785-0799(Fax)

FLYING HORSE NORTH FILING NO. 1 GRADING AND EROSION CONTROL PLAN

DESIGNED BY	MAW	SCALE		DATE	12/12/17
DRAWN BY	MAW	(H) 1"= 100'		SHEET	4 OF 10
CHECKED BY		(V) 1"= N/A		JOB NO.	1096.11

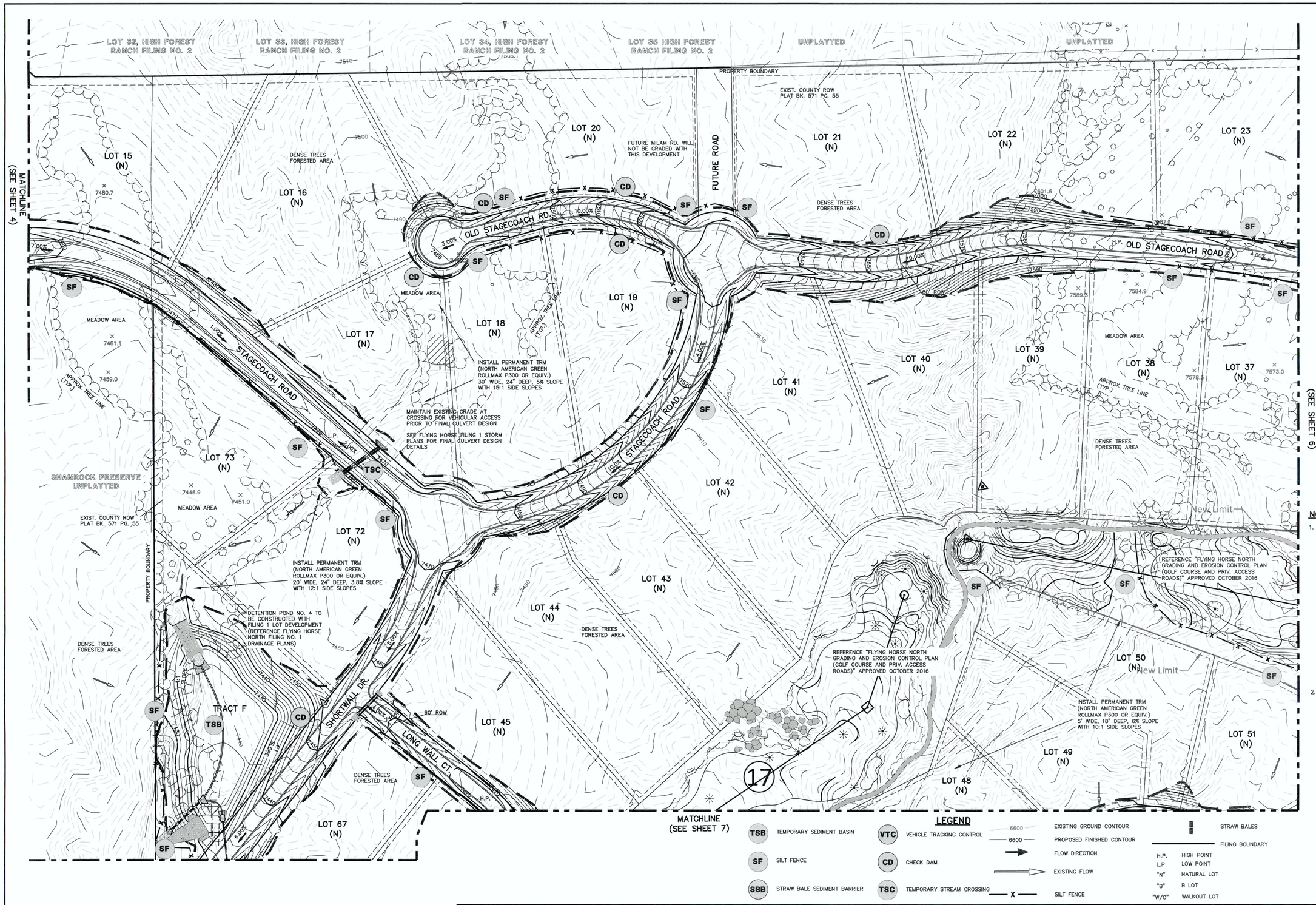

NOTES:

1. AT LEAST TEN DAYS PRIOR TO THE ANTICIPATED START OF CONSTRUCTION, FOR PROJECTS THAT WILL DISTURB 1 ACRE OR MORE (ONE ACRE OR MORE AFTER JULY 1, 2002), THE OWNER OR OPERATOR OF THE CONSTRUCTION ACTIVITY SHALL SUBMIT A PERMIT APPLICATION FOR STORMWATER DISCHARGE TO THE COLORADO DEPARTMENT OF PUBLIC HEALTH AND ENVIRONMENT, WATER QUALITY CONTROL DIVISION. THE APPLICATION CONTAINS CERTIFICATION OF COMPLETION OF A STORMWATER MANAGEMENT PLAN (SWMP), OF WHICH THIS GRADING AND EROSION CONTROL PLAN MAY BE A PART. FOR INFORMATION OR APPLICATION MATERIALS CONTACT:

   COLORADO DEPARTMENT OF PUBLIC HEALTH AND ENVIRONMENT
   WATER QUALITY CONTROL DIVISION
   WQCD – PERMITS
   4300 CHERRY CREEK DRIVE SOUTH
   DENVER, CO 80246–1530
   ATTN: PERMITS UNIT

2. ALL DISTURBED AREAS TO BE RESEEDED UPON COMPLETION OF OVERLOT GRADING AND EROSION CONTROL MEASURES HAVE BEEN INSTALLED OR WITHIN 60 DAYS, WHICHEVER IS LESS TIME.

LEGEND

TSB	TEMPORARY SEDIMENT BASIN	VTC	VEHICLE TRACKING CONTROL	6600	EXISTING GROUND CONTOUR
SF	SILT FENCE	CD	CHECK DAM	6600	PROPOSED FINISHED CONTOUR
SBB	STRAW BALE SEDIMENT BARRIER	TSC	TEMPORARY STREAM CROSSING		FLOW DIRECTION
					EXISTING FLOW
				X	SILT FENCE
					STRAW BALES
					FILING BOUNDARY

H.P. HIGH POINT
L.P LOW POINT
"N" NATURAL LOT
"B" B LOT
"W/O" WALKOUT LOT

N

100 50 0 100 200

SCALE: 1" = 100'

48 HOURS BEFORE YOU DIG, CALL UTILITY LOCATORS
811
UTILITY NOTIFICATION CENTER OF COLORADO
IT'S THE LAW

THE LOCATIONS OF EXISTING UNDERGROUND UTILITIES ARE SHOWN IN AN APPROXIMATE WAY ONLY. THE CONTRACTOR SHALL DETERMINE THE EXACT LOCATION OF ALL EXISTING UTILITIES BEFORE COMMENCING WORK. THE CONTRACTOR SHALL BE FULLY RESPONSIBLE FOR ANY AND ALL DAMAGES WHICH MIGHT BE CAUSED BY HIS FAILURE TO EXACTLY LOCATE AND PRESERVE ANY AND ALL UNDERGROUND UTILITIES.

NO.	REVISION	DATE
1	REVISED PER COUNTY COMMENTS	7–25–16
2	REVISED PER COUNTY COMMENTS	9–12–16
3	REVISED PER ROAD LAYOUT CHANGE	3–1–17
4	REVISED PER COUNTY COMMENTS	3–22–17
5	REVISED GRADING TO MINIMIZE EARTHWORKS	7–17–17
6	UPDATE GRADING PLAN PER FILING 1 DESIGN	12–12–17
7	REVISED PER COUNTY COMMENTS	7–10–18

REVIEW:

PREPARED UNDER MY DIRECT SUPERVISION FOR AND ON BEHALF OF CLASSIC CONSULTING ENGINEERS AND SURVEYORS, LLC

MARC A. WHORTON, COLORADO P.E. #37155 — DATE 7/10/18

CLASSIC CONSULTING ENGINEERS & SURVEYORS
619 N. Cascade Avenue, Suite 200
Colorado Springs, Colorado 80903
(719)785–0790
(719)785–0799(Fax)

FLYING HORSE NORTH FILING NO. 1 GRADING AND EROSION CONTROL PLAN

DESIGNED BY	MAW	SCALE		DATE	12/12/17
DRAWN BY	MAW	(H) 1"= 100'		SHEET	5 OF 10
CHECKED BY		(V) 1"= N/A		JOB NO.	1096.11

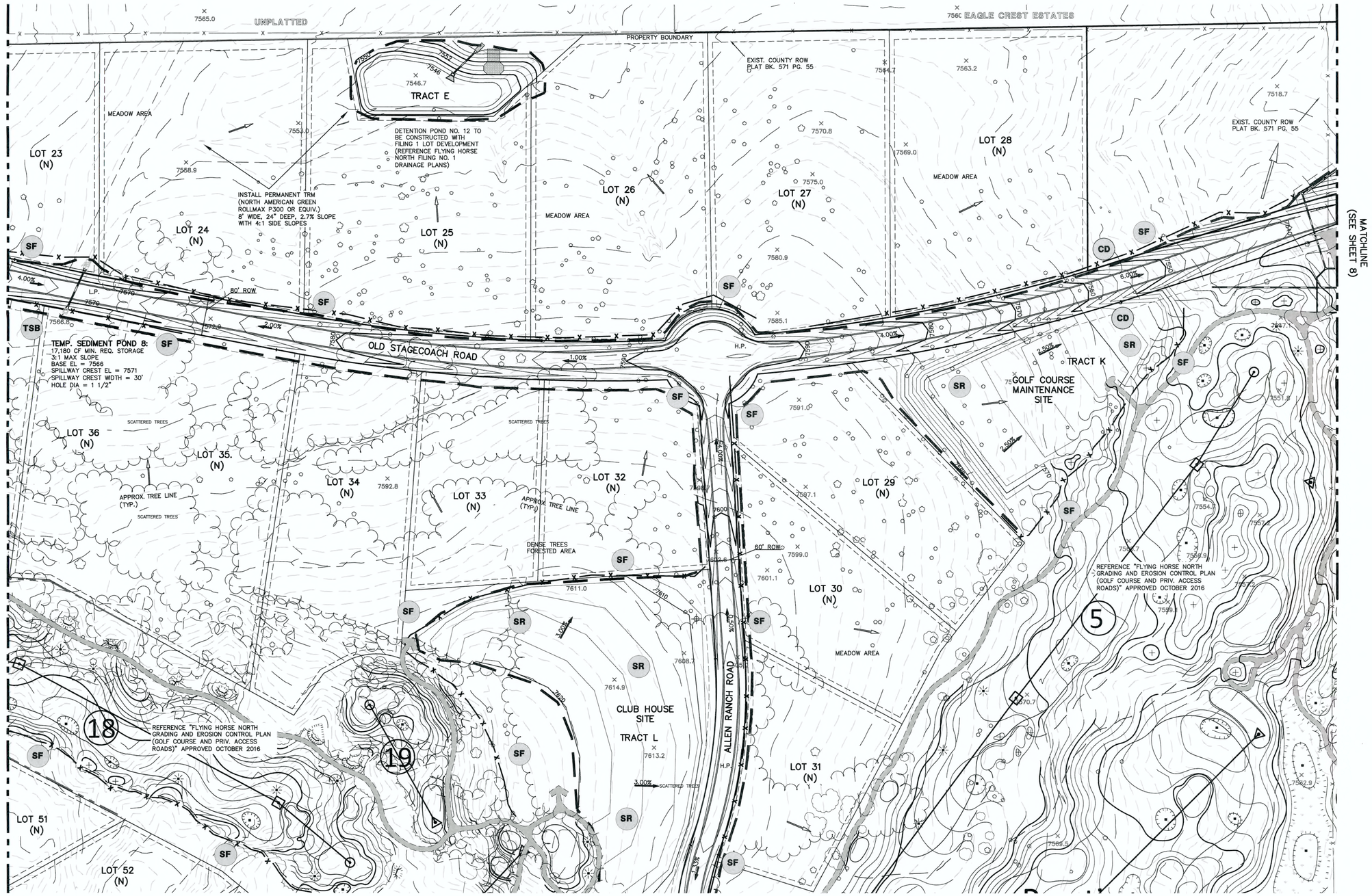

NOTES:

1. AT LEAST TEN DAYS PRIOR TO THE ANTICIPATED START OF CONSTRUCTION, FOR PROJECTS THAT WILL DISTURB 1 ACRE OR MORE (ONE ACRE OR MORE AFTER JULY 1, 2002), THE OWNER OR OPERATOR OF THE CONSTRUCTION ACTIVITY SHALL SUBMIT A PERMIT APPLICATION FOR STORMWATER DISCHARGE TO THE COLORADO DEPARTMENT OF PUBLIC HEALTH AND ENVIRONMENT, WATER QUALITY CONTROL DIVISION. THE APPLICATION CONTAINS CERTIFICATION OF COMPLETION OF A STORMWATER MANAGEMENT PLAN (SWMP), OF WHICH THIS GRADING AND EROSION CONTROL PLAN MAY BE A PART. FOR INFORMATION OR APPLICATION MATERIALS CONTACT:

   COLORADO DEPARTMENT OF PUBLIC HEALTH AND ENVIRONMENT
   WATER QUALITY CONTROL DIVISION
   WQCD – PERMITS
   4300 CHERRY CREEK DRIVE SOUTH
   DENVER, CO 80246–1530
   ATTN: PERMITS UNIT

2. ALL DISTURBED AREAS TO BE RESEEDED UPON COMPLETION OF OVERLOT GRADING AND EROSION CONTROL MEASURES HAVE BEEN INSTALLED OR WITHIN 60 DAYS, WHICHEVER IS LESS TIME.

N

100 50 0 100 200

SCALE: 1" = 100'

LEGEND

- TSB — TEMPORARY SEDIMENT BASIN
- SR — SURFACE ROUGHENING
- SF — SILT FENCE
- SBB — STRAW BALE SEDIMENT BARRIER
- VTC — VEHICLE TRACKING CONTROL
- CD — CHECK DAM

- 6600 — EXISTING GROUND CONTOUR
- 6600 — PROPOSED FINISHED CONTOUR
- FLOW DIRECTION
- EXISTING FLOW
- X — SILT FENCE
- STRAW BALES
- FILING BOUNDARY

H.P.	HIGH POINT
L.P	LOW POINT
"A"	A LOT
"B"	B LOT
"W/O"	WALKOUT LOT
"T"	TRANSITION LOT
"G"	GARDEN LOT
x 43.39	FG AT LOT LINE

TEMPORARY SEDIMENT BASIN SIZING TABLE

Basin No.	Disturbed Area (acres) *Sized @ 3600 ft³/acre*	Undeveloped (acres) *Sized @ 500 ft³/acre*	Developed (acres) *Sized @ 900 ft³/acre*	Sediment Basin Required Volume (ft³)
8	1.80	21.40	0.00	17180

REFERENCE URBAN DRAINAGE VOLUME 3 SEDIMENT BASIN DESIGN (SEE SHEET 14 FOR DETAIL)

48 HOURS BEFORE YOU DIG, CALL UTILITY LOCATORS
811
UTILITY NOTIFICATION CENTER OF COLORADO
IT'S THE LAW

THE LOCATIONS OF EXISTING UNDERGROUND UTILITIES ARE SHOWN IN AN APPROXIMATE WAY ONLY. THE CONTRACTOR SHALL DETERMINE THE EXACT LOCATION OF ALL EXISTING UTILITIES BEFORE COMMENCING WORK. THE CONTRACTOR SHALL BE FULLY RESPONSIBLE FOR ANY AND ALL DAMAGES WHICH MIGHT BE CAUSED BY HIS FAILURE TO EXACTLY LOCATE AND PRESERVE ANY AND ALL UNDERGROUND UTILITIES.

NO.	REVISION	DATE
1	REVISED PER COUNTY COMMENTS	7–25–16
2	REVISED PER COUNTY COMMENTS	9–8–16
3	UPDATE GRADING PLAN PER FILING 1 DESIGN	12–12–17
4	REVISED PER COUNTY COMMENTS	3–16–98
5	REVISED PER COUNTY COMMENTS	7–10–18

REVIEW:

PREPARED UNDER MY DIRECT SUPERVISION FOR AND ON BEHALF OF CLASSIC CONSULTING ENGINEERS AND SURVEYORS, LLC

MARC A. WHORTON, COLORADO P.E. #37155 — DATE 7/10/18

CLASSIC CONSULTING ENGINEERS & SURVEYORS
619 N. Cascade Avenue, Suite 200
Colorado Springs, Colorado 80903
(719)785–0790
(719)785–0799(Fax)

FLYING HORSE NORTH FILING NO. 1 GRADING AND EROSION CONTROL PLAN

DESIGNED BY	MAW	SCALE		DATE	12/12/17
DRAWN BY	MAW	(H) 1"= 100'		SHEET	6 OF 10
CHECKED BY		(V) 1"= N/A		JOB NO.	1096.11

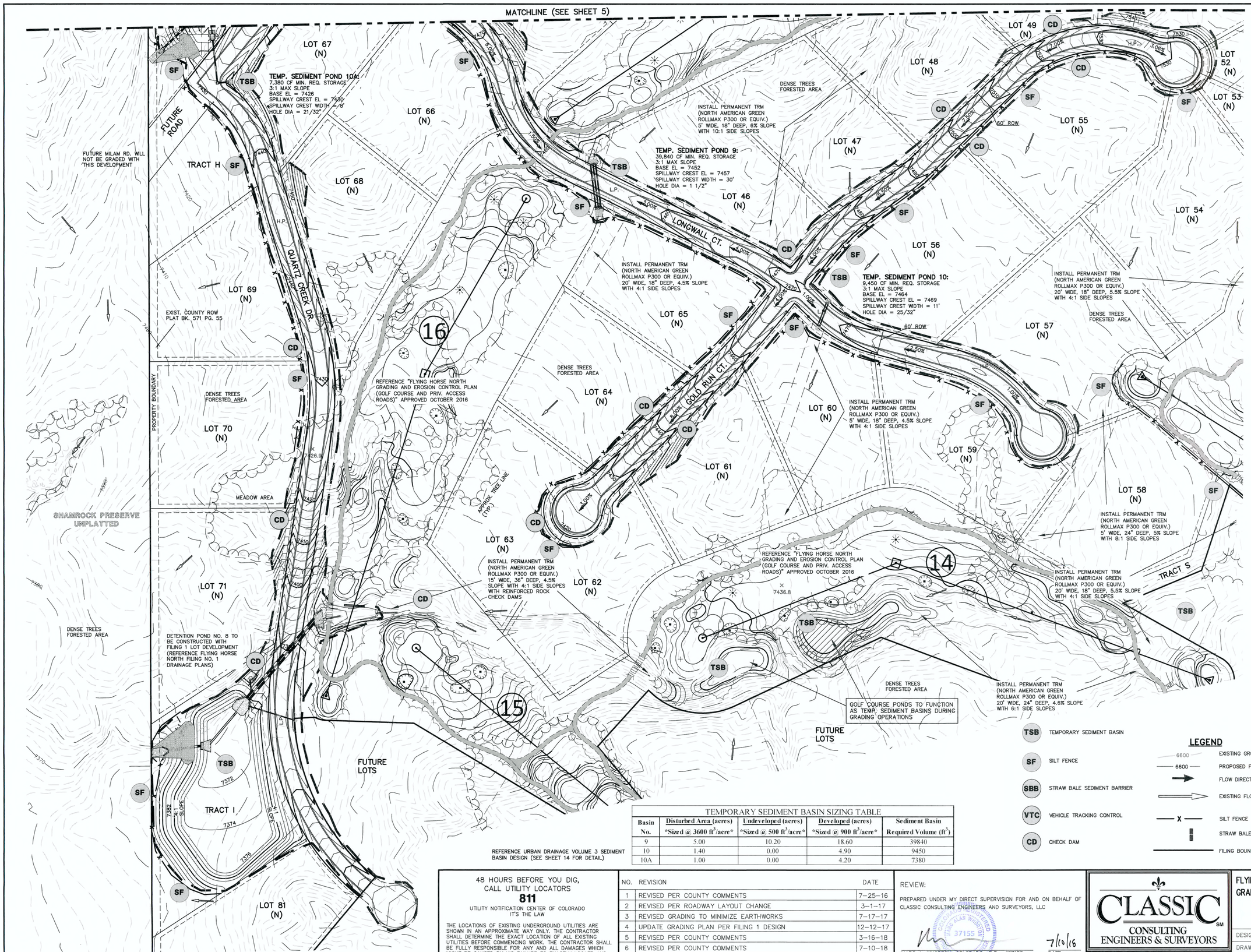

NOTES:

1. AT LEAST TEN DAYS PRIOR TO THE ANTICIPATED START OF CONSTRUCTION, FOR PROJECTS THAT WILL DISTURB 1 ACRE OR MORE (ONE ACRE OR MORE AFTER JULY 1, 2002), THE OWNER OR OPERATOR OF THE CONSTRUCTION ACTIVITY SHALL SUBMIT A PERMIT APPLICATION FOR STORMWATER DISCHARGE TO THE COLORADO DEPARTMENT OF PUBLIC HEALTH AND ENVIRONMENT, WATER QUALITY CONTROL DIVISION. THE APPLICATION CONTAINS CERTIFICATION OF COMPLETION OF A STORMWATER MANAGEMENT PLAN (SWMP), OF WHICH THIS GRADING AND EROSION CONTROL PLAN MAY BE A PART. FOR INFORMATION OR APPLICATION MATERIALS CONTACT:

   COLORADO DEPARTMENT OF PUBLIC HEALTH AND ENVIRONMENT
   WATER QUALITY CONTROL DIVISION
   WQCD – PERMITS
   4300 CHERRY CREEK DRIVE SOUTH
   DENVER, CO 80246–1530
   ATTN: PERMITS UNIT

2. ALL DISTURBED AREAS TO BE RESEEDED UPON COMPLETION OF OVERLOT GRADING AND EROSION CONTROL MEASURES HAVE BEEN INSTALLED OR WITHIN 60 DAYS, WHICHEVER IS LESS TIME.

LEGEND

TSB	TEMPORARY SEDIMENT BASIN
SF	SILT FENCE
SBB	STRAW BALE SEDIMENT BARRIER
VTC	VEHICLE TRACKING CONTROL
CD	CHECK DAM
6600	EXISTING GROUND CONTOUR
6600	PROPOSED FINISHED CONTOUR
	FLOW DIRECTION
	EXISTING FLOW
X	SILT FENCE
	STRAW BALES
	FILING BOUNDARY
H.P.	HIGH POINT
L.P	LOW POINT
"A"	A LOT
"B"	B LOT
"W/O"	WALKOUT LOT
"T"	TRANSITION LOT
"G"	GARDEN LOT
43.39	FG AT LOT LINE

REFERENCE URBAN DRAINAGE VOLUME 3 SEDIMENT BASIN DESIGN (SEE SHEET 14 FOR DETAIL)

TEMPORARY SEDIMENT BASIN SIZING TABLE

Basin No.	Disturbed Area (acres) *Sized @ 3600 ft³/acre*	Undeveloped (acres) *Sized @ 500 ft³/acre*	Developed (acres) *Sized @ 900 ft³/acre*	Sediment Basin Required Volume (ft³)
9	5.00	10.20	18.60	39840
10	1.40	0.00	4.90	9450
10A	1.00	0.00	4.20	7380

48 HOURS BEFORE YOU DIG, CALL UTILITY LOCATORS
811
UTILITY NOTIFICATION CENTER OF COLORADO
IT'S THE LAW

THE LOCATIONS OF EXISTING UNDERGROUND UTILITIES ARE SHOWN IN AN APPROXIMATE WAY ONLY. THE CONTRACTOR SHALL DETERMINE THE EXACT LOCATION OF ALL EXISTING UTILITIES BEFORE COMMENCING WORK. THE CONTRACTOR SHALL BE FULLY RESPONSIBLE FOR ANY AND ALL DAMAGES WHICH MIGHT BE CAUSED BY HIS FAILURE TO EXACTLY LOCATE AND PRESERVE ANY AND ALL UNDERGROUND UTILITIES.

NO.	REVISION	DATE
1	REVISED PER COUNTY COMMENTS	7–25–16
2	REVISED PER ROADWAY LAYOUT CHANGE	3–1–17
3	REVISED GRADING TO MINIMIZE EARTHWORKS	7–17–17
4	UPDATE GRADING PLAN PER FILING 1 DESIGN	12–12–17
5	REVISED PER COUNTY COMMENTS	3–16–18
6	REVISED PER COUNTY COMMENTS	7–10–18

REVIEW:

PREPARED UNDER MY DIRECT SUPERVISION FOR AND ON BEHALF OF CLASSIC CONSULTING ENGINEERS AND SURVEYORS, LLC

COLORADO LICENSED PROFESSIONAL ENGINEER MARC A. WHORTON 37155

MARC A. WHORTON, COLORADO P.E. #37155 — DATE 7/10/18

CLASSIC CONSULTING ENGINEERS & SURVEYORS
619 N. Cascade Avenue, Suite 200
Colorado Springs, Colorado 80903
(719)785–0790
(719)785–0799(Fax)

FLYING HORSE NORTH FILING NO. 1 GRADING AND EROSION CONTROL PLAN

DESIGNED BY	MAW	SCALE		DATE	12/12/17
DRAWN BY	MAW	(H) 1"= 100'		SHEET 7	OF 10
CHECKED BY		(V) 1"= N/A		JOB NO.	1096.11

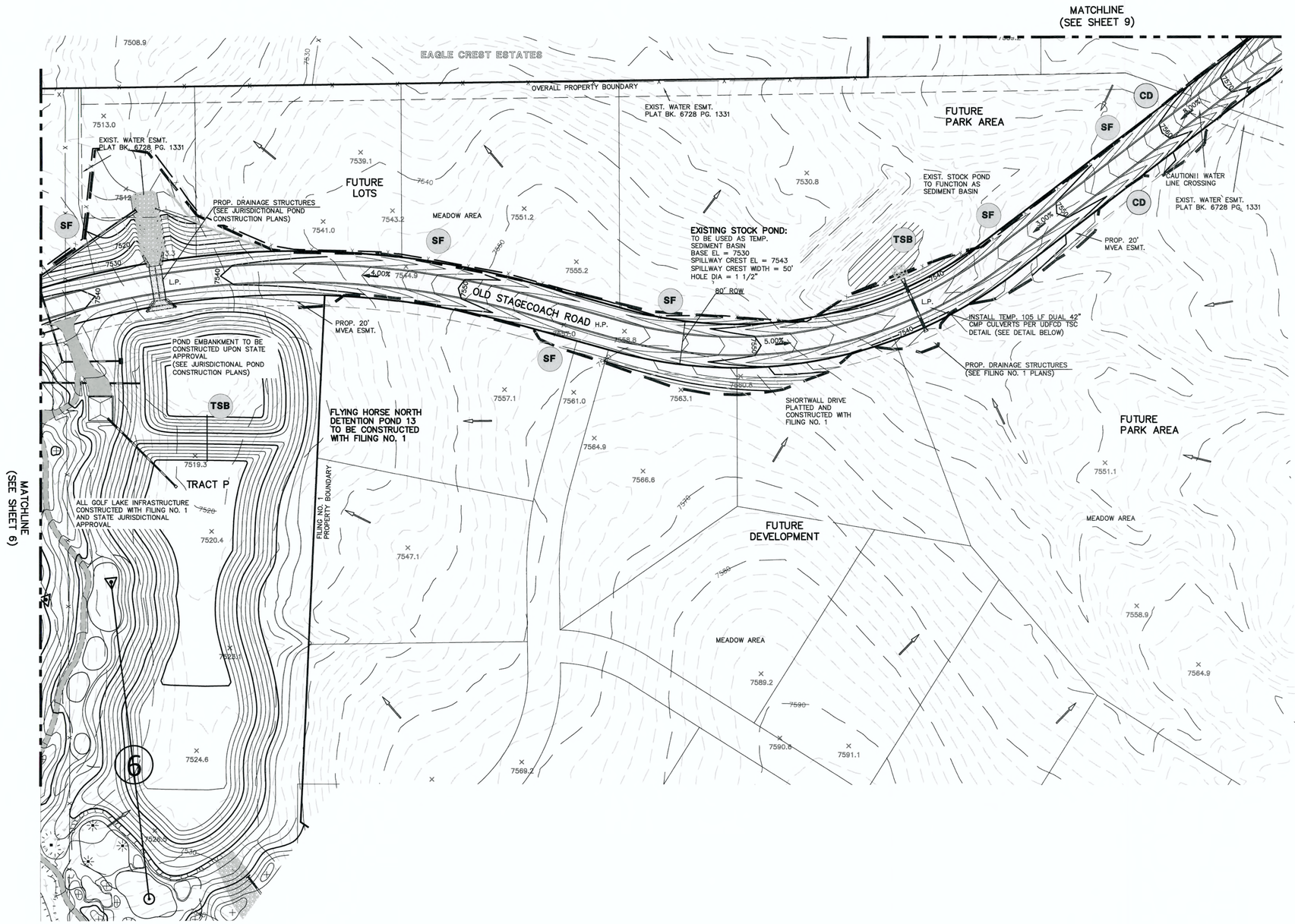

NOTES:

1. AT LEAST TEN DAYS PRIOR TO THE ANTICIPATED START OF CONSTRUCTION, FOR PROJECTS THAT WILL DISTURB 1 ACRE OR MORE (ONE ACRE OR MORE AFTER JULY 1, 2002), THE OWNER OR OPERATOR OF THE CONSTRUCTION ACTIVITY SHALL SUBMIT A PERMIT APPLICATION FOR STORMWATER DISCHARGE TO THE COLORADO DEPARTMENT OF PUBLIC HEALTH AND ENVIRONMENT, WATER QUALITY CONTROL DIVISION. THE APPLICATION CONTAINS CERTIFICATION OF COMPLETION OF A STORMWATER MANAGEMENT PLAN (SWMP), OF WHICH THIS GRADING AND EROSION CONTROL PLAN MAY BE A PART. FOR INFORMATION OR APPLICATION MATERIALS CONTACT:

   COLORADO DEPARTMENT OF PUBLIC
   HEALTH AND ENVIRONMENT
   WATER QUALITY CONTROL DIVISION
   WQCD – PERMITS
   4300 CHERRY CREEK DRIVE SOUTH
   DENVER, CO 80246–1530
   ATTN: PERMITS UNIT

2. ALL DISTURBED AREAS TO BE RESEEDED UPON COMPLETION OF OVERLOT GRADING AND EROSION CONTROL MEASURES HAVE BEEN INSTALLED OR WITHIN 60 DAYS, WHICHEVER IS LESS TIME.

N

100 50 0 100 200

SCALE: 1" = 100'

LEGEND

- TSB — TEMPORARY SEDIMENT BASIN
- SF — SILT FENCE
- SBB — STRAW BALE SEDIMENT BARRIER
- VTC — VEHICLE TRACKING CONTROL
- CD — CHECK DAM

- 6600 — EXISTING GROUND CONTOUR
- 6600 — PROPOSED FINISHED CONTOUR
- FLOW DIRECTION
- EXISTING FLOW
- X — SILT FENCE
- STRAW BALES
- FILING BOUNDARY

H.P.	HIGH POINT
L.P.	LOW POINT
"A"	A LOT
"B"	B LOT
"W/O"	WALKOUT LOT
"T"	TRANSITION LOT
"G"	GARDEN LOT
x 43.39	FG AT LOT LINE

48 HOURS BEFORE YOU DIG,
CALL UTILITY LOCATORS
811
UTILITY NOTIFICATION CENTER OF COLORADO
IT'S THE LAW

THE LOCATIONS OF EXISTING UNDERGROUND UTILITIES ARE SHOWN IN AN APPROXIMATE WAY ONLY. THE CONTRACTOR SHALL DETERMINE THE EXACT LOCATION OF ALL EXISTING UTILITIES BEFORE COMMENCING WORK. THE CONTRACTOR SHALL BE FULLY RESPONSIBLE FOR ANY AND ALL DAMAGES WHICH MIGHT BE CAUSED BY HIS FAILURE TO EXACTLY LOCATE AND PRESERVE ANY AND ALL UNDERGROUND UTILITIES.

NO.	REVISION	DATE
1	REVISED PER COUNTY COMMENTS	7–25–16
2	GOLF COURSE MINOR GRADING CHANGE	3–15–17
3	REVISED PER 90' ROW FOR STAGECOACH RD.	3–1–17
4	REVISED GRADING TO MINIMIZE EARTHWORKS	7–17–17
5	UPDATE GRADING PLAN PER FILING 1 DESIGN	12–12–17

REVIEW:

PREPARED UNDER MY DIRECT SUPERVISION FOR AND ON BEHALF OF CLASSIC CONSULTING ENGINEERS AND SURVEYORS, LLC

COLORADO REGISTERED PROFESSIONAL ENGINEER MARC ALAN WHORTON 37155

MARC A. WHORTON, COLORADO P.E. #37155 — DATE 6/14/18

CLASSIC CONSULTING ENGINEERS & SURVEYORS
619 N. Cascade Avenue, Suite 200
Colorado Springs, Colorado 80903
(719)785–0790
(719)785–0799(Fax)

FLYING HORSE NORTH FILING NO. 1
GRADING AND EROSION CONTROL PLAN

DESIGNED BY	MAW	SCALE		DATE	12/12/17
DRAWN BY	MAW	(H) 1"= 100'		SHEET 8	OF 10
CHECKED BY		(V) 1"= N/A		JOB NO.	1096.11

N:\10961\DRAWINGS\CONSTRUCTION\Final Grading Plan\10961- GRADING QB.dwg, 3/28/2018 12:42:44 PM, 1:1

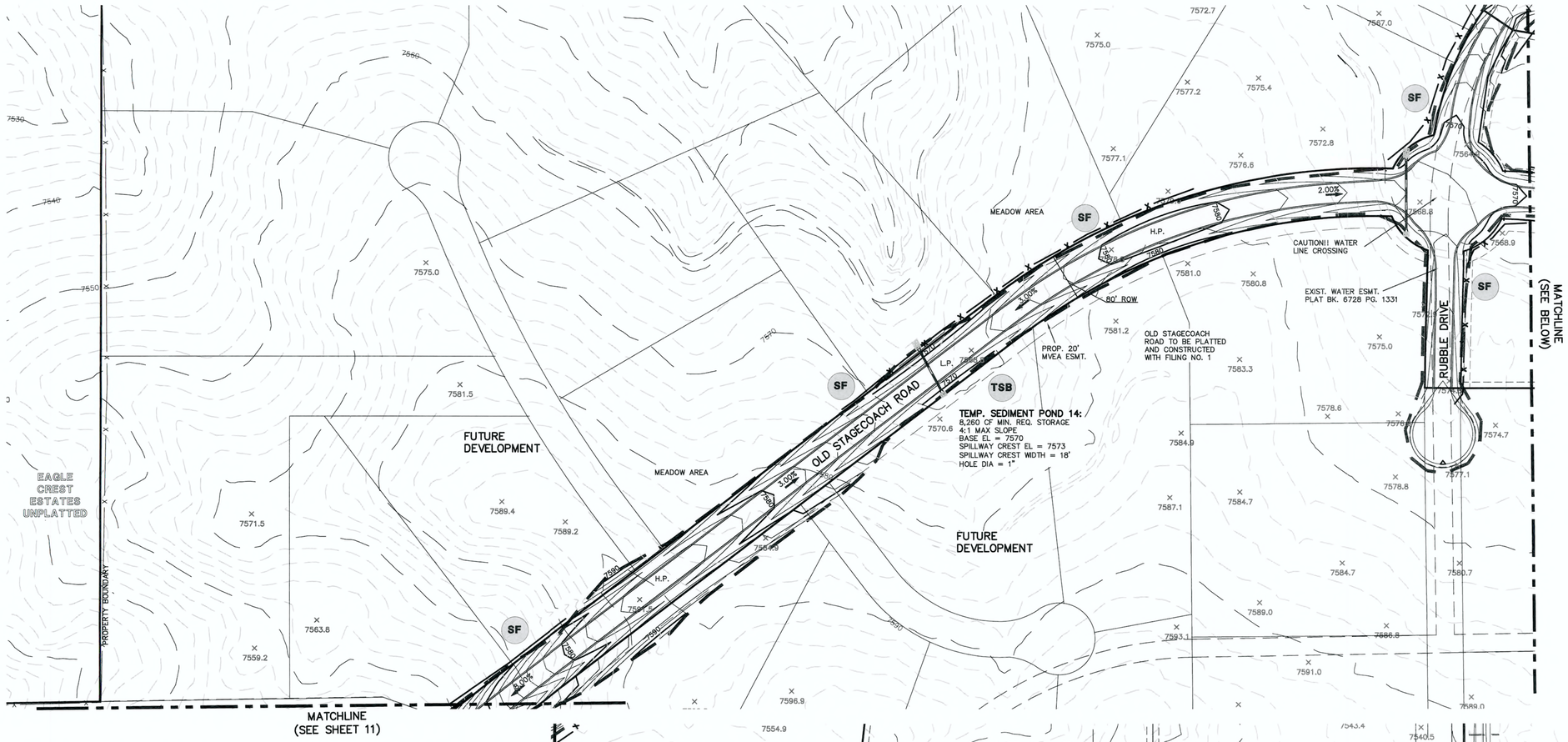

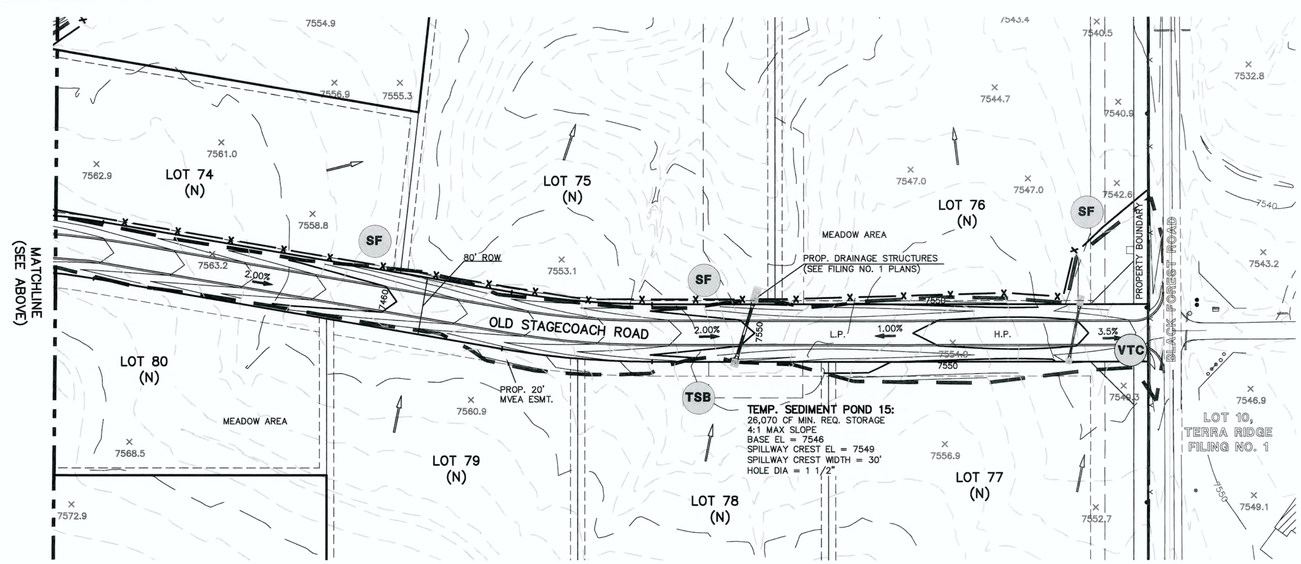

NOTES:

1. AT LEAST TEN DAYS PRIOR TO THE ANTICIPATED START OF CONSTRUCTION, FOR PROJECTS THAT WILL DISTURB 1 ACRE OR MORE (ONE ACRE OR MORE AFTER JULY 1, 2002), THE OWNER OR OPERATOR OF THE CONSTRUCTION ACTIVITY SHALL SUBMIT A PERMIT APPLICATION FOR STORMWATER DISCHARGE TO THE COLORADO DEPARTMENT OF PUBLIC HEALTH AND ENVIRONMENT, WATER QUALITY CONTROL DIVISION. THE APPLICATION CONTAINS CERTIFICATION OF COMPLETION OF A STORMWATER MANAGEMENT PLAN (SWMP), OF WHICH THIS GRADING AND EROSION CONTROL PLAN MAY BE A PART. FOR INFORMATION OR APPLICATION MATERIALS CONTACT:

   COLORADO DEPARTMENT OF PUBLIC HEALTH AND ENVIRONMENT
   WATER QUALITY CONTROL DIVISION
   WQCD - PERMITS
   4300 CHERRY CREEK DRIVE SOUTH
   DENVER, CO 80246-1530
   ATTN: PERMITS UNIT

2. ALL DISTURBED AREAS TO BE RESEEDED UPON COMPLETION OF OVERLOT GRADING AND EROSION CONTROL MEASURES HAVE BEEN INSTALLED OR WITHIN 60 DAYS, WHICHEVER IS LESS TIME.

TEMPORARY SEDIMENT BASIN SIZING TABLE

Basin No.	Disturbed Area (acres) *Sized @ 3600 ft³/acre*	Undeveloped (acres) *Sized @ 500 ft³/acre*	Developed (acres) *Sized @ 900 ft³/acre*	Sediment Basin Required Volume (ft³)
14	0.60	12.20	0.00	8260
15	1.20	43.50	0.00	26070

REFERENCE URBAN DRAINAGE VOLUME 3 SEDIMENT BASIN DESIGN (SEE SHEET 14 FOR DETAIL)

LEGEND

- TSB — TEMPORARY SEDIMENT BASIN
- SF — SILT FENCE
- SBB — STRAW BALE SEDIMENT BARRIER
- VTC — VEHICLE TRACKING CONTROL
- CD — CHECK DAM
- 6600 — EXISTING GROUND CONTOUR
- 6600 — PROPOSED FINISHED CONTOUR
- FLOW DIRECTION
- EXISTING FLOW
- X — SILT FENCE
- STRAW BALES
- FILING BOUNDARY
- H.P. — HIGH POINT
- L.P — LOW POINT
- "A" — A LOT
- "B" — B LOT
- "W/O" — WALKOUT LOT
- "T" — TRANSITION LOT
- "G" — GARDEN LOT
- x 43.39 — FG AT LOT LINE

N

100 50 0 100 200

SCALE: 1" = 100'

48 HOURS BEFORE YOU DIG, CALL UTILITY LOCATORS
811
UTILITY NOTIFICATION CENTER OF COLORADO
IT'S THE LAW

THE LOCATIONS OF EXISTING UNDERGROUND UTILITIES ARE SHOWN IN AN APPROXIMATE WAY ONLY. THE CONTRACTOR SHALL DETERMINE THE EXACT LOCATION OF ALL EXISTING UTILITIES BEFORE COMMENCING WORK. THE CONTRACTOR SHALL BE FULLY RESPONSIBLE FOR ANY AND ALL DAMAGES WHICH MIGHT BE CAUSED BY HIS FAILURE TO EXACTLY LOCATE AND PRESERVE ANY AND ALL UNDERGROUND UTILITIES.

NO.	REVISION	DATE
1	REVISED PER COUNTY COMMENTS	7-26-16
2	REVISED PER COUNTY COMMENTS	9-7-16
3	REVISED PER 90' ROW FOR STAGECOACH RD.	3-1-17
4	REVISED GRADING TO MINIMIZE EARTHWORKS	7-17-17
5	UPDATE GRADING PLAN PER FILING 1 DESIGN	12-12-17

REVIEW:

PREPARED UNDER MY DIRECT SUPERVISION FOR AND ON BEHALF OF CLASSIC CONSULTING ENGINEERS AND SURVEYORS, LLC

COLORADO REGISTERED MARC ALAN WHORTON 37155 PROFESSIONAL ENGINEER

MARC A. WHORTON, COLORADO P.E. #37155 — DATE 6/14/18

CLASSIC CONSULTING ENGINEERS & SURVEYORS
619 N. Cascade Avenue, Suite 200
Colorado Springs, Colorado 80903
(719)785-0790
(719)785-0799(Fax)

FLYING HORSE NORTH FILING NO. 1
GRADING AND EROSION CONTROL PLAN

DESIGNED BY	MAW	SCALE		DATE	12/12/17
DRAWN BY	MAW	(H) 1"= 100'		SHEET 9	OF 10
CHECKED BY		(V) 1"= N/A		JOB NO.	1096.11

SEEDING GUIDELINES

1. SEEDBED PREPARATION
THE SEEDBED SHOULD BE WELL-SETTLED AND FIRM, BUT FRIABLE ENOUGH THAT THE SEED CAN BE PLACED AT THE SPECIFIED DEPTHS. COMPETITIVE STANDS OF WEEDS THAT ARE PRESENT BEFORE SEEDING MUST BE CONTROLLED BY SHALLOW TILLAGE OR BY APPLICATION OF HERBICIDES. SOILS THAT HAVE BEEN OVER-COMPACTED BY TRAFFIC OR EQUIPEMENT, ESPECIALLY WHEN WET, SHOULD BE TILLED TO BREAK UP ROOTING-RESTRICTIVE LAYERS, THAN HARROWED, ROLLED, OR PACKED TO PREPARE THE REQUIRED FIRM SEEDBED.

2. FERTILIZER
FERTILIZER SHOULD BE APPLIED AT A RATE OF 50 POUNDS OF AVAILABLE NITROGEN PER ACRE AND 40 POUNDS OF AVAILABLE PHOSPHATE PER ACRE. THE TIME OF APPLICATION SHOULD BE IMMEDIATELY PRIOR TO SEEDING, AT THE TIME OF SEEDING, OR IMMEDIATELY FOLLOWING SEEDING, DEPENDING ON THE KIND OF FERTILIZER AND TYPE OF EQUIPMENT USED.

3. SEEDING
SEED SHOULD BE PLANTED WITH A GRASS DRILL ON ALL SLOPES OF 33% (3:1) OR FLATTER. SEED MAY BE BROADCAST BY HAND, BY MECHANICAL SPREADER, OR BY HYDRAULIC EQUIPMENT ON AREAS THAT ARE SMALL, TOO STEEP, OR NOT ACCESSIBLE FOR SEED DRILL OPERATIONS.
SEED PLANTED WITH A DRILL SHOULD BE COVERED WITH SOIL TO A DEPTH OF 1/4 TO 3/4 INCH. SEED PLANTED BY THE BROADCAST METHOD SHALL BE INCORPORATED INTO THE SOIL SURFACE, NOT TO EXCEED A DEPTH OF 3/4 INCH, BY RAKING, HARROWING, OR OTHER PROVEN METHOD.

THE TIME OF SEEDING IS FROM OCTOBER 15TH – MAY 31ST. SEED PLANTED IN THE LATE FALL WILL REMAIN DORMANT UNTIL SPRING, WHEN IT WILL GERMINATE.

4. MULCHING
SEEDED AREAS SHOULD BE MULCHED TO CONSERVE MOISTURE; PREVENT SURFACE COMPACTION OR CRUSTING; REDUCE RUNOFF AND EROSION; CONTROL INSECTS; AND HELP ESTABLISH PLANT COVER.

NATIVE HAY OR STRAW SHOULD BE APPLIED AT A RATE OF 4,000 POUNDS PER ACRE AND CRIMPED INTO THE GROUND. ON SLOPES GREATER THAN 3:1, AN AGRONOMY BLANKET SHOULD BE USED.

5. SUPPLEMENTAL WATER
IN LOW RAINFALL AREAS, WHERE WATER IS AVAILABLE AND WHERE RAPID ESTABLISHMENT IS NEEDED, IRRIGATION OF NEW SEEDING SHOULD BE PERFORMED DURING THE FIRST GROWING SEASON. WATER SHOULD BE APPLIED AT APPROXIMATELY ONE WEEK INTERVALS, AT A RATE OF 3/4 TO 1 INCH PER APPLICATION, WHEN RAINFALL IS DEFICIENT FOR PLANT DEVELOPMENT.

EROSION PROTECTION & REVEGETATION REQUIREMENTS
"PER U.S.D.A. NATURAL RESOURCES CONSERVATION SERVICE GUIDELINES"

1 PRACTICE NO. & NAME ____
RANGE SITE B – LOAMY SAND

2 PLANNED:
SEEDED PREP:
A METHOD ____
B DATES OCT. 15–MAY 31
C CLEAN TILLED XX
FIRM SEEDBED XX
STUBBLE COVER ____
INTERSEED ____
OTHER ____

SEEDING OPERATION:
A METHOD:
DRILL XX
INTERSEED ____
BROADCAST ____
B DRILL SPACING 6–12"
TYPE GRASS W/AGITATOR
C DATE OCT. 15 – MAY 31
D PLANTING DEPTH 1/4–3/4"

FERTILIZER:
POUNDS ACTUAL PER ACRE N2 40
(AVAILABLE)
P205 40
K N/A

WEED CONTROL: N/A
MOWING: ____
CHEMICAL: XX
DATES: ____
SEE S.C.S. FOR SPECIFIC RECOMMENDATIONS AT HERBICIDE APPLICATION TIME

MULCH:
KIND: LONG – STEM NATIVE HAY
AMOUNT: 4,000 POUNDS/ACRE
HOW-APPLIED: N/A
HOW-ANCHORED: CRIMPED
ANCHORAGE DEPTH: 4"

SEED:

VARIETY	SPECIES	(1) REQUIRED PLS RATES PER ACRES (100%)
KAW	BIG BLUE STEM	5.5
HOLT	YELLOW INDIAN GRASS	5.0
GOSHEN	PRAIRIE SANDREED	3.5
VAUGHN	SIDEOATS GRAMMA	4.5
NEBRASKA 28	SWITCH GRASS	2.5
ARRIBA	PRAIRIE SANDREED	8.0

(2) % OF SPECIES IN MIXTURE	(3) PLS SEEDING RATE PER SPECIES/ACRE (1) x (2)	(4) PLANNED ACRE	(5) TOTAL PLS LBS/ SPECIES PLANNED (3) x (4)
25	1.4	75	105.0
25	1.3	75	97.5
15	0.5	75	37.5
5	0.2	75	15.0
25	0.6	75	45.0
5	0.4	75	30.0

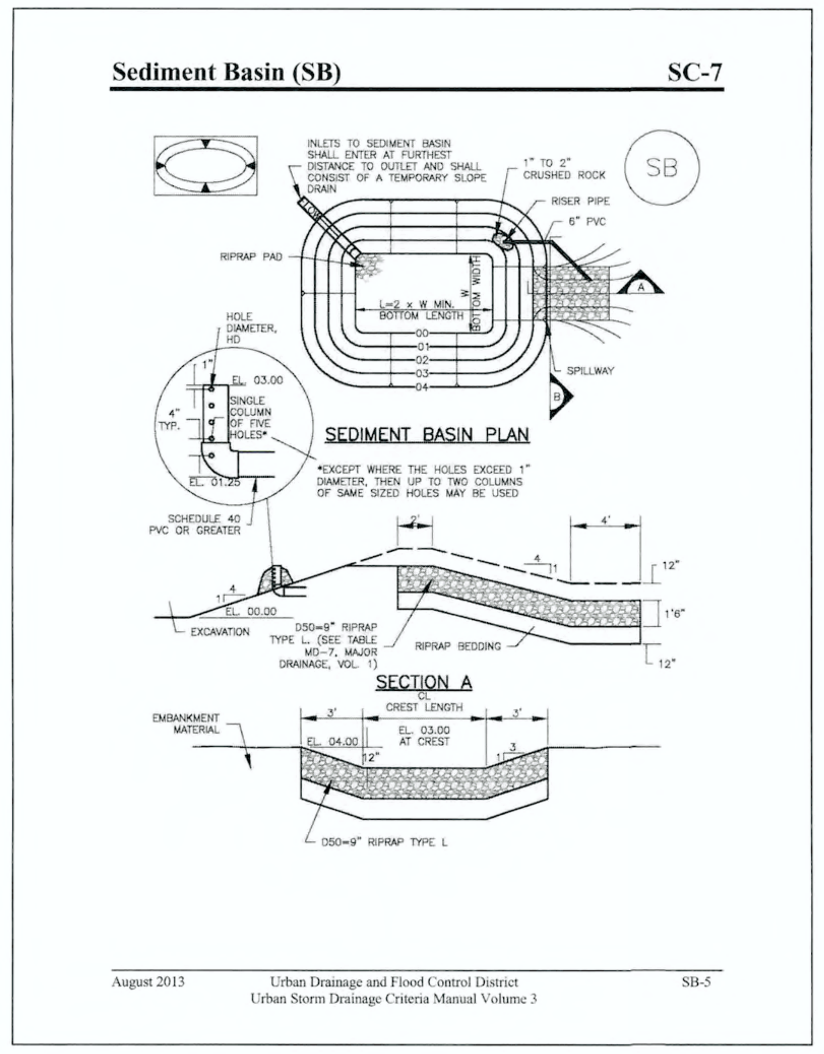

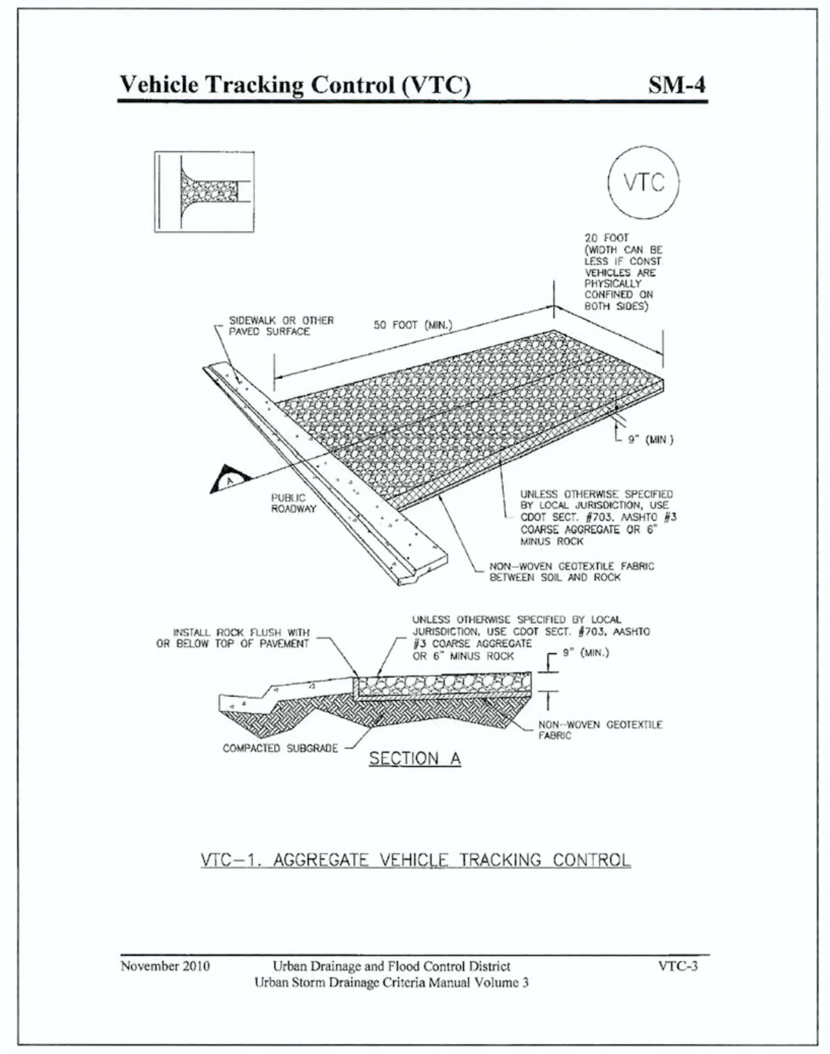

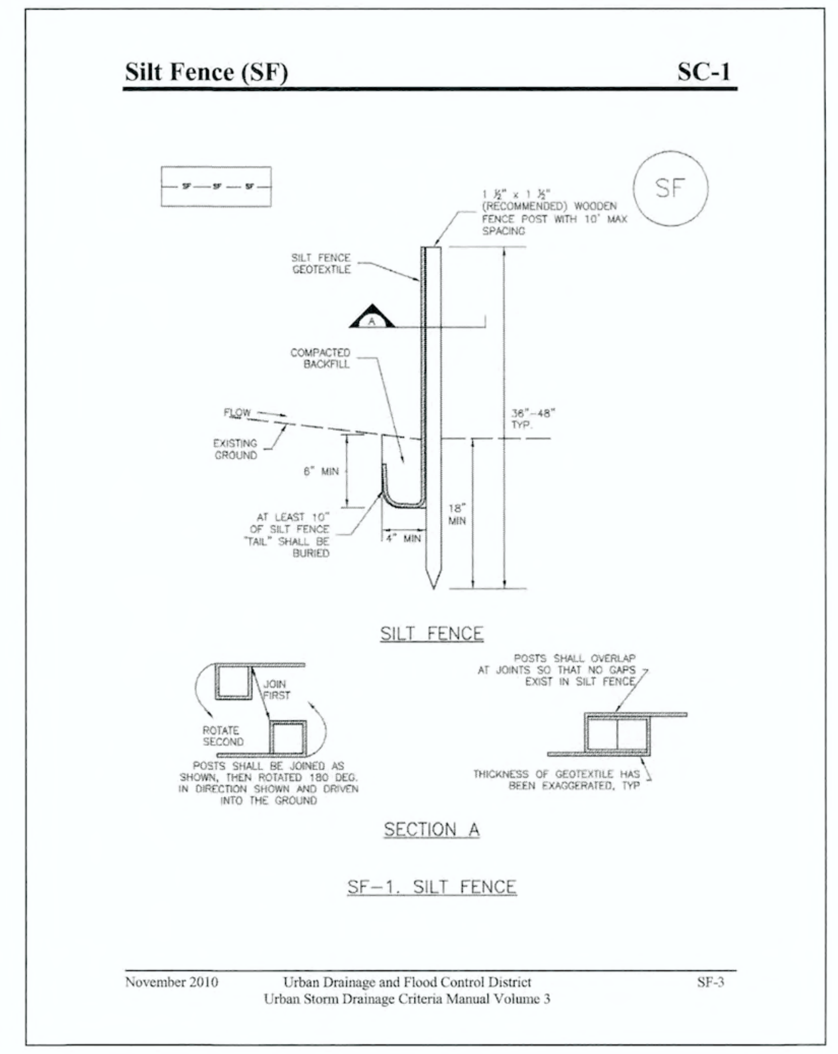

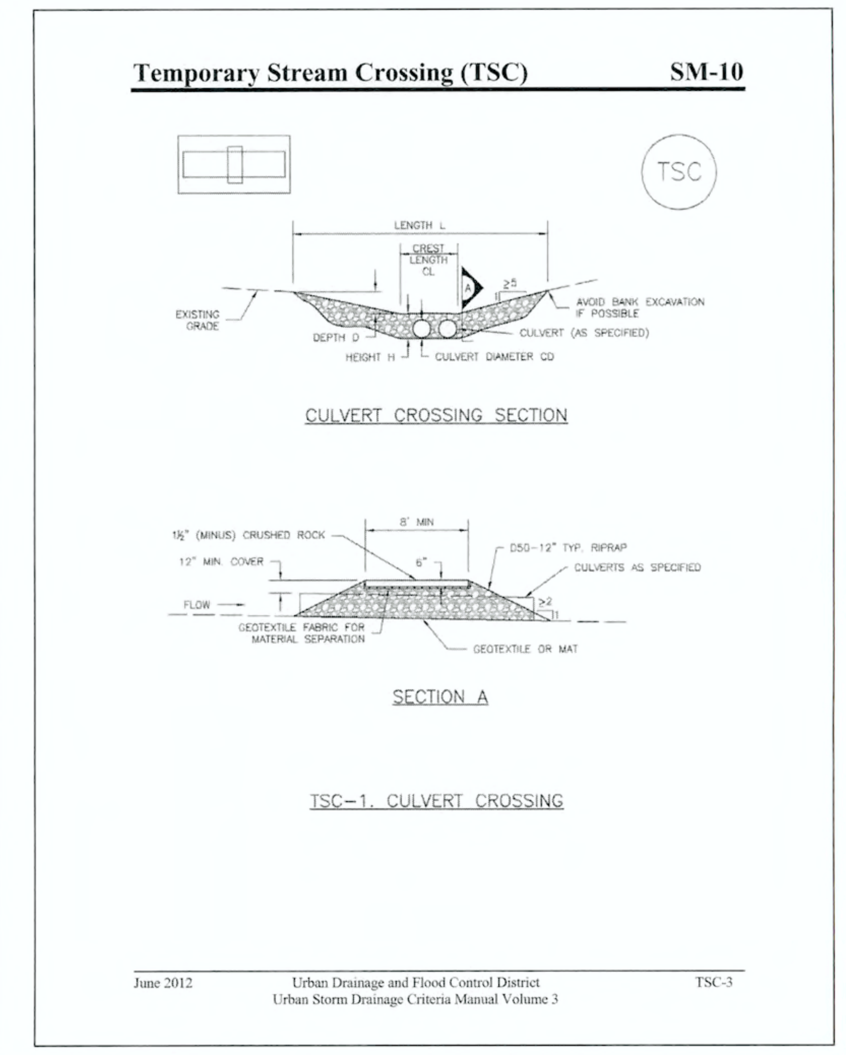

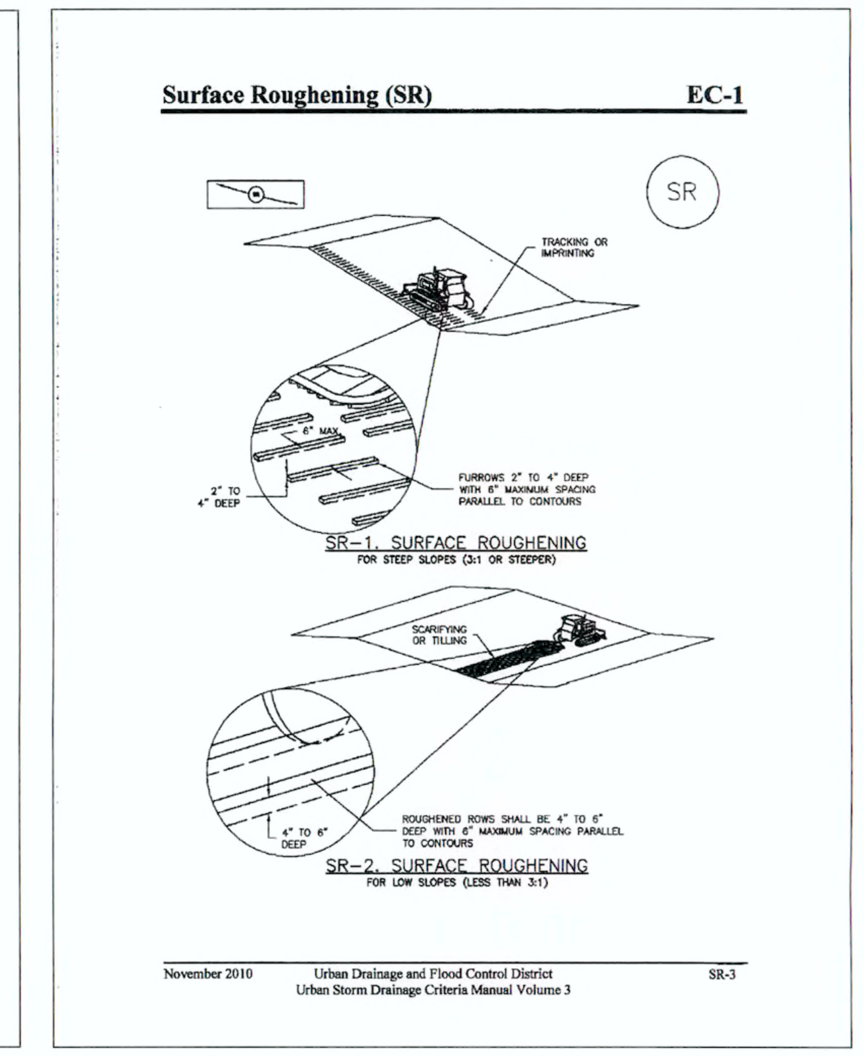

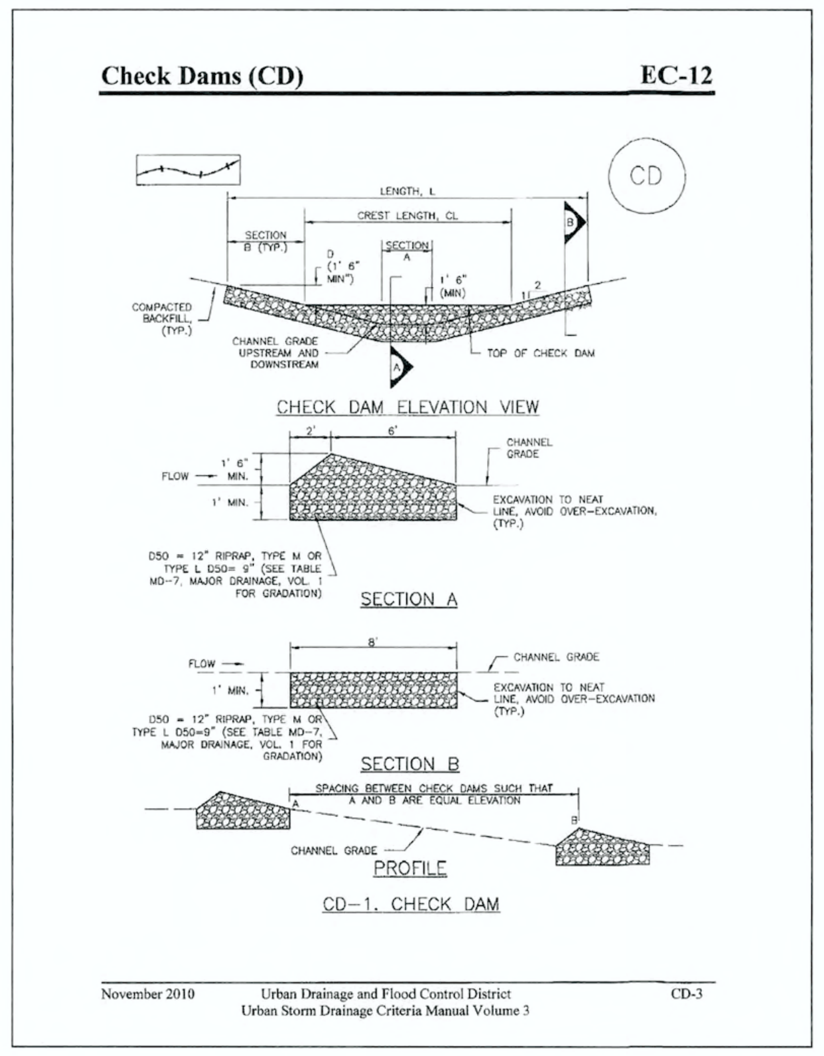

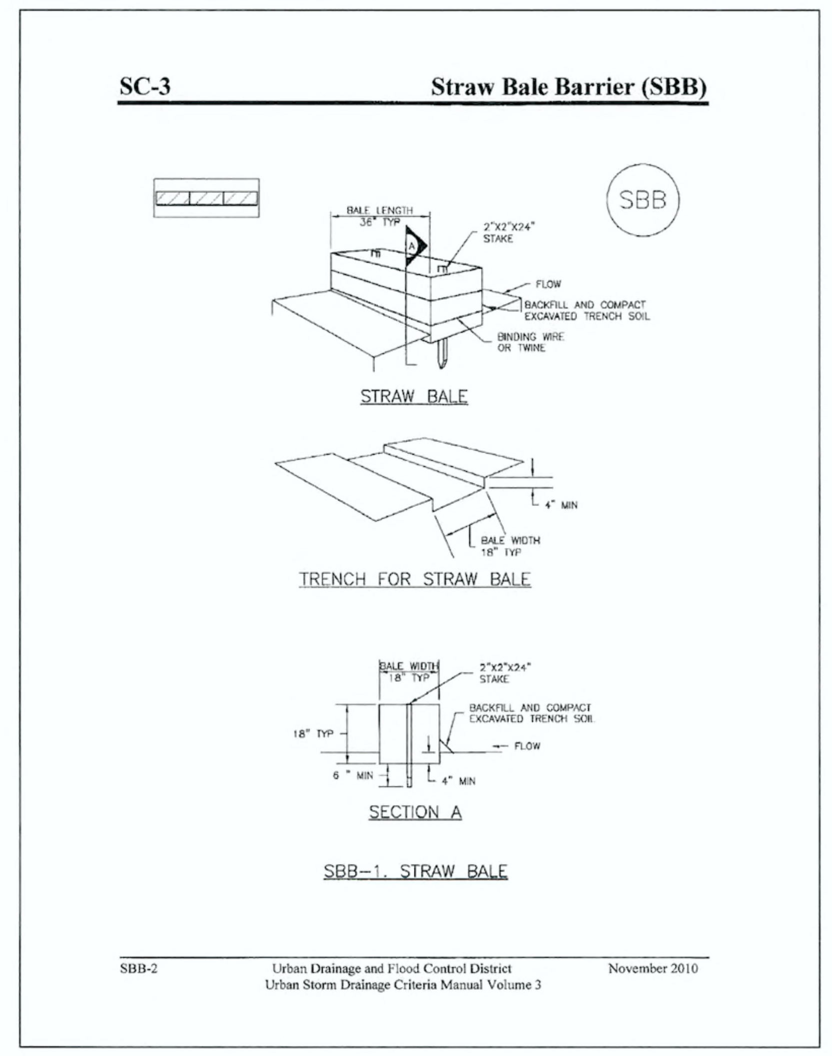

SC-1 Silt Fence (SF)

SILT FENCE INSTALLATION NOTES

1. SILT FENCE MUST BE PLACED AWAY FROM THE TOE OF THE SLOPE TO ALLOW FOR WATER PONDING. SILT FENCE AT THE TOE OF A SLOPE SHOULD BE INSTALLED IN A FLAT LOCATION AT LEAST SEVERAL FEET (2-5 FT) FROM THE TOE OF THE SLOPE TO ALLOW ROOM FOR PONDING AND DEPOSITION.

2. A UNIFORM 6" X 4" ANCHOR TRENCH SHALL BE EXCAVATED USING TRENCHER OR SILT FENCE INSTALLATION DEVICE. NO ROAD GRADERS, BACKHOES, OR SIMILAR EQUIPMENT SHALL BE USED.

3. COMPACT ANCHOR TRENCH BY HAND WITH A "JUMPING JACK" OR BY WHEEL ROLLING. COMPACTION SHALL BE SUCH THAT SILT FENCE RESISTS BEING PULLED OUT OF ANCHOR TRENCH BY HAND.

4. SILT FENCE SHALL BE PULLED TIGHT AS IT IS ANCHORED TO THE STAKES. THERE SHOULD BE NO NOTICEABLE SAG BETWEEN STAKES AFTER IT HAS BEEN ANCHORED TO THE STAKES.

5. SILT FENCE FABRIC SHALL BE ANCHORED TO THE STAKES USING 1" HEAVY DUTY STAPLES OR NAILS WITH 1" HEADS. STAPLES AND NAILS SHOULD BE PLACED 3" ALONG THE FABRIC DOWN THE STAKE.

6. AT THE END OF A RUN OF SILT FENCE ALONG A CONTOUR, THE SILT FENCE SHOULD BE TURNED PERPENDICULAR TO THE CONTOUR TO CREATE A "J-HOOK." THE "J-HOOK" EXTENDING PERPENDICULAR TO THE CONTOUR SHOULD BE OF SUFFICIENT LENGTH TO KEEP RUNOFF FROM FLOWING AROUND THE END OF THE SILT FENCE (TYPICALLY 10' – 20').

7. SILT FENCE SHALL BE INSTALLED PRIOR TO ANY LAND DISTURBING ACTIVITIES.

SILT FENCE MAINTENANCE NOTES

1. INSPECT BMPs EACH WORKDAY, AND MAINTAIN THEM IN EFFECTIVE OPERATING CONDITION. MAINTENANCE OF BMPs SHOULD BE PROACTIVE, NOT REACTIVE. INSPECT BMPs AS SOON AS POSSIBLE (AND ALWAYS WITHIN 24 HOURS) FOLLOWING A STORM THAT CAUSES SURFACE EROSION, AND PERFORM NECESSARY MAINTENANCE.

2. FREQUENT OBSERVATIONS AND MAINTENANCE ARE NECESSARY TO MAINTAIN BMPs IN EFFECTIVE OPERATING CONDITION. INSPECTIONS AND CORRECTIVE MEASURES SHOULD BE DOCUMENTED THOROUGHLY.

3. WHERE BMPs HAVE FAILED, REPAIR OR REPLACEMENT SHOULD BE INITIATED UPON DISCOVERY OF THE FAILURE.

4. SEDIMENT ACCUMULATED UPSTREAM OF THE SILT FENCE SHALL BE REMOVED AS NEEDED TO MAINTAIN THE FUNCTIONALITY OF THE BMP, TYPICALLY WHEN DEPTH OF ACCUMULATED SEDIMENTS IS APPROXIMATELY 6".

5. REPAIR OR REPLACE SILT FENCE WHEN THERE ARE SIGNS OF WEAR, SUCH AS SAGGING, TEARING, OR COLLAPSE.

6. SILT FENCE IS TO REMAIN IN PLACE UNTIL THE UPSTREAM DISTURBED AREA IS STABILIZED AND APPROVED BY THE LOCAL JURISDICTION, OR IS REPLACED BY AN EQUIVALENT PERIMETER SEDIMENT CONTROL BMP.

7. WHEN SILT FENCE IS REMOVED, ALL DISTURBED AREAS SHALL BE COVERED WITH TOPSOIL, SEEDED AND MULCHED OR OTHERWISE STABILIZED AS APPROVED BY LOCAL JURISDICTION.

(DETAIL ADAPTED FROM TOWN OF PARKER, COLORADO AND CITY OF AURORA, NOT AVAILABLE IN AUTOCAD)

NOTE: MANY JURISDICTIONS HAVE BMP DETAILS THAT VARY FROM UDFCD STANDARD DETAILS. CONSULT WITH LOCAL JURISDICTIONS AS TO WHICH DETAIL SHOULD BE USED WHEN DIFFERENCES ARE NOTED.

SF-4 Urban Drainage and Flood Control District Urban Storm Drainage Criteria Manual Volume 3 November 2010

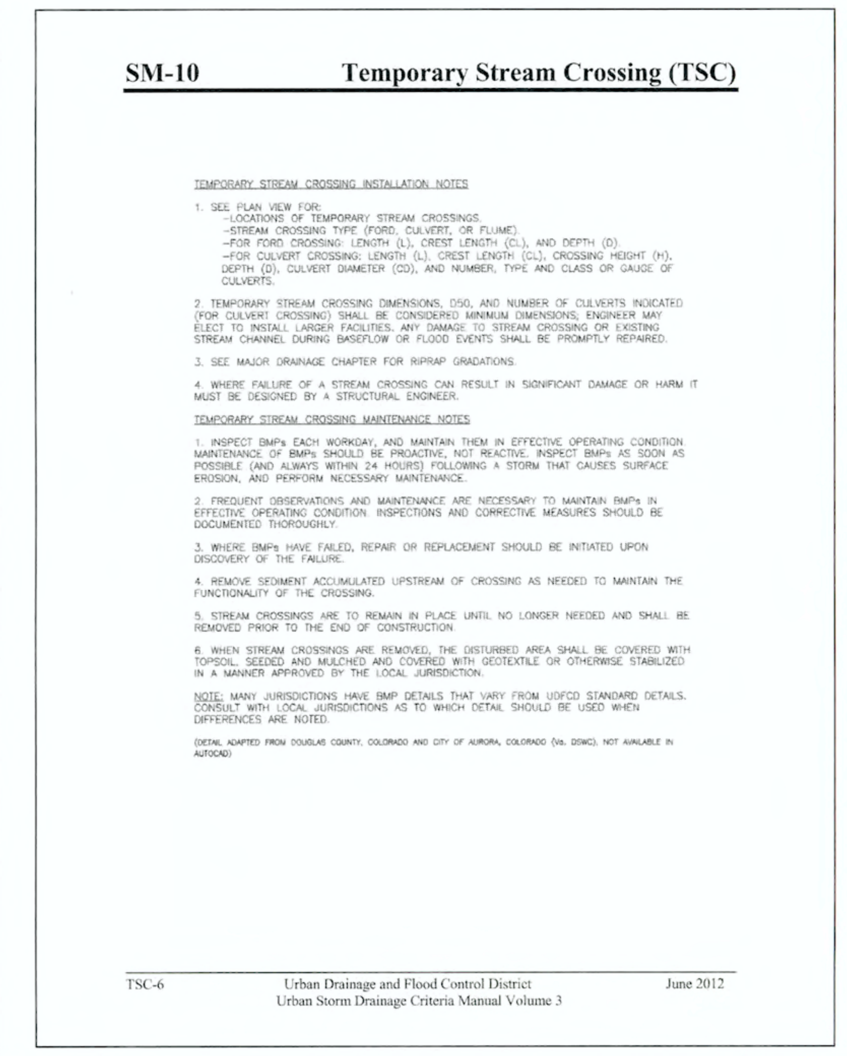
SM-10 Temporary Stream Crossing (TSC)

TEMPORARY STREAM CROSSING INSTALLATION NOTES

1. SEE PLAN VIEW FOR:
-LOCATIONS OF TEMPORARY STREAM CROSSINGS.
-STREAM CROSSING TYPE (FORD, CULVERT, OR FLUME).
-FOR FORD CROSSING: LENGTH (L), CREST LENGTH (CL), AND DEPTH (D).
-FOR CULVERT CROSSING: LENGTH (L), CREST LENGTH (CL), CROSSING HEIGHT (H), DEPTH (D), CULVERT DIAMETER (CD), AND NUMBER, TYPE AND CLASS OR GAUGE OF CULVERTS.

2. TEMPORARY STREAM CROSSING DIMENSIONS, D50, AND NUMBER OF CULVERTS INDICATED (FOR CULVERT CROSSING) SHALL BE CONSIDERED MINIMUM DIMENSIONS; ENGINEER MAY ELECT TO INSTALL LARGER FACILITIES. ANY DAMAGE TO STREAM CROSSING OR EXISTING STREAM CHANNEL DURING BASEFLOW OR FLOOD EVENTS SHALL BE PROMPTLY REPAIRED.

3. SEE MAJOR DRAINAGE CHAPTER FOR RIPRAP GRADATIONS.

4. WHERE FAILURE OF A STREAM CROSSING CAN RESULT IN SIGNIFICANT DAMAGE OR HARM IT MUST BE DESIGNED BY A STRUCTURAL ENGINEER.

TEMPORARY STREAM CROSSING MAINTENANCE NOTES

1. INSPECT BMPs EACH WORKDAY, AND MAINTAIN THEM IN EFFECTIVE OPERATING CONDITION. MAINTENANCE OF BMPs SHOULD BE PROACTIVE, NOT REACTIVE. INSPECT BMPs AS SOON AS POSSIBLE (AND ALWAYS WITHIN 24 HOURS) FOLLOWING A STORM THAT CAUSES SURFACE EROSION, AND PERFORM NECESSARY MAINTENANCE.

2. FREQUENT OBSERVATIONS AND MAINTENANCE ARE NECESSARY TO MAINTAIN BMPs IN EFFECTIVE OPERATING CONDITION. INSPECTIONS AND CORRECTIVE MEASURES SHOULD BE DOCUMENTED THOROUGHLY.

3. WHERE BMPs HAVE FAILED, REPAIR OR REPLACEMENT SHOULD BE INITIATED UPON DISCOVERY OF THE FAILURE.

4. REMOVE SEDIMENT ACCUMULATED UPSTREAM OF CROSSING AS NEEDED TO MAINTAIN THE FUNCTIONALITY OF THE CROSSING.

5. STREAM CROSSINGS ARE TO REMAIN IN PLACE UNTIL NO LONGER NEEDED AND SHALL BE REMOVED PRIOR TO THE END OF CONSTRUCTION.

6. WHEN STREAM CROSSINGS ARE REMOVED, THE DISTURBED AREA SHALL BE COVERED WITH TOPSOIL, SEEDED AND MULCHED AND COVERED WITH GEOTEXTILE OR OTHERWISE STABILIZED IN A MANNER APPROVED BY THE LOCAL JURISDICTION.

NOTE: MANY JURISDICTIONS HAVE BMP DETAILS THAT VARY FROM UDFCD STANDARD DETAILS. CONSULT WITH LOCAL JURISDICTIONS AS TO WHICH DETAIL SHOULD BE USED WHEN DIFFERENCES ARE NOTED.

(DETAIL ADAPTED FROM DOUGLAS COUNTY, COLORADO AND CITY OF AURORA, COLORADO (Vs. DSWC), NOT AVAILABLE IN AUTOCAD)

TSC-6 Urban Drainage and Flood Control District Urban Storm Drainage Criteria Manual Volume 3 June 2012

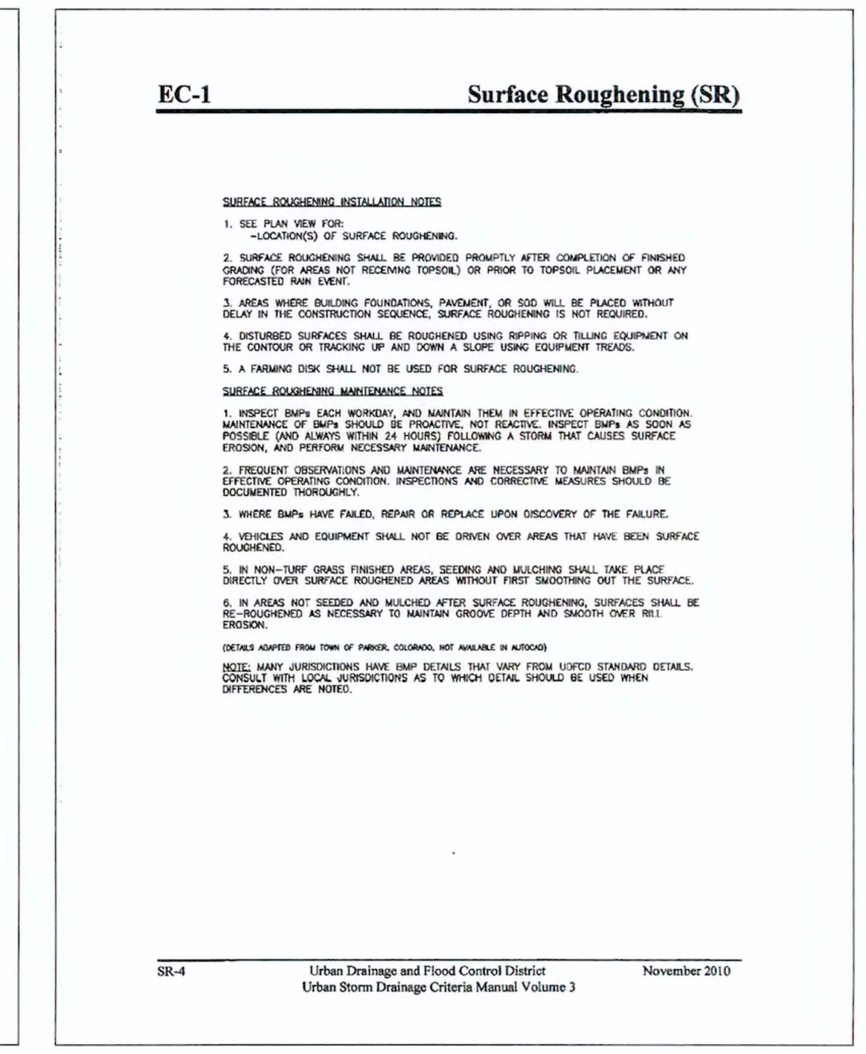
EC-1 Surface Roughening (SR)

SURFACE ROUGHENING INSTALLATION NOTES

1. SEE PLAN VIEW FOR:
-LOCATION(S) OF SURFACE ROUGHENING.

2. SURFACE ROUGHENING SHALL BE PROVIDED PROMPTLY AFTER COMPLETION OF FINISHED GRADING (FOR AREAS NOT RECEIVING TOPSOIL) OR PRIOR TO TOPSOIL PLACEMENT OR ANY FORECASTED RAIN EVENT.

3. AREAS WHERE BUILDING FOUNDATIONS, PAVEMENT, OR SOD WILL BE PLACED WITHOUT DELAY IN THE CONSTRUCTION SEQUENCE, SURFACE ROUGHENING IS NOT REQUIRED.

4. DISTURBED SURFACES SHALL BE ROUGHENED USING RIPPING OR TILLING EQUIPMENT ON THE CONTOUR OR TRACKING UP AND DOWN A SLOPE USING EQUIPMENT TREADS.

5. A FARMING DISK SHALL NOT BE USED FOR SURFACE ROUGHENING.

SURFACE ROUGHENING MAINTENANCE NOTES

1. INSPECT BMPs EACH WORKDAY, AND MAINTAIN THEM IN EFFECTIVE OPERATING CONDITION. MAINTENANCE OF BMPs SHOULD BE PROACTIVE, NOT REACTIVE. INSPECT BMPs AS SOON AS POSSIBLE (AND ALWAYS WITHIN 24 HOURS) FOLLOWING A STORM THAT CAUSES SURFACE EROSION, AND PERFORM NECESSARY MAINTENANCE.

2. FREQUENT OBSERVATIONS AND MAINTENANCE ARE NECESSARY TO MAINTAIN BMPs IN EFFECTIVE OPERATING CONDITION. INSPECTIONS AND CORRECTIVE MEASURES SHOULD BE DOCUMENTED THOROUGHLY.

3. WHERE BMPs HAVE FAILED, REPAIR OR REPLACE UPON DISCOVERY OF THE FAILURE.

4. VEHICLES AND EQUIPMENT SHALL NOT BE DRIVEN OVER AREAS THAT HAVE BEEN SURFACE ROUGHENED.

5. IN NON-TURF GRASS FINISHED AREAS, SEEDING AND MULCHING SHALL TAKE PLACE DIRECTLY OVER SURFACE ROUGHENED AREAS WITHOUT FIRST SMOOTHING OUT THE SURFACE.

6. IN AREAS NOT SEEDED AND MULCHED AFTER SURFACE ROUGHENING, SURFACES SHALL BE RE-ROUGHENED AS NECESSARY TO MAINTAIN GROOVE DEPTH AND SMOOTH OVER RILL EROSION.

(DETAILS ADAPTED FROM TOWN OF PARKER, COLORADO, NOT AVAILABLE IN AUTOCAD)

NOTE: MANY JURISDICTIONS HAVE BMP DETAILS THAT VARY FROM UDFCD STANDARD DETAILS. CONSULT WITH LOCAL JURISDICTIONS AS TO WHICH DETAIL SHOULD BE USED WHEN DIFFERENCES ARE NOTED.

SR-4 Urban Drainage and Flood Control District Urban Storm Drainage Criteria Manual Volume 3 November 2010

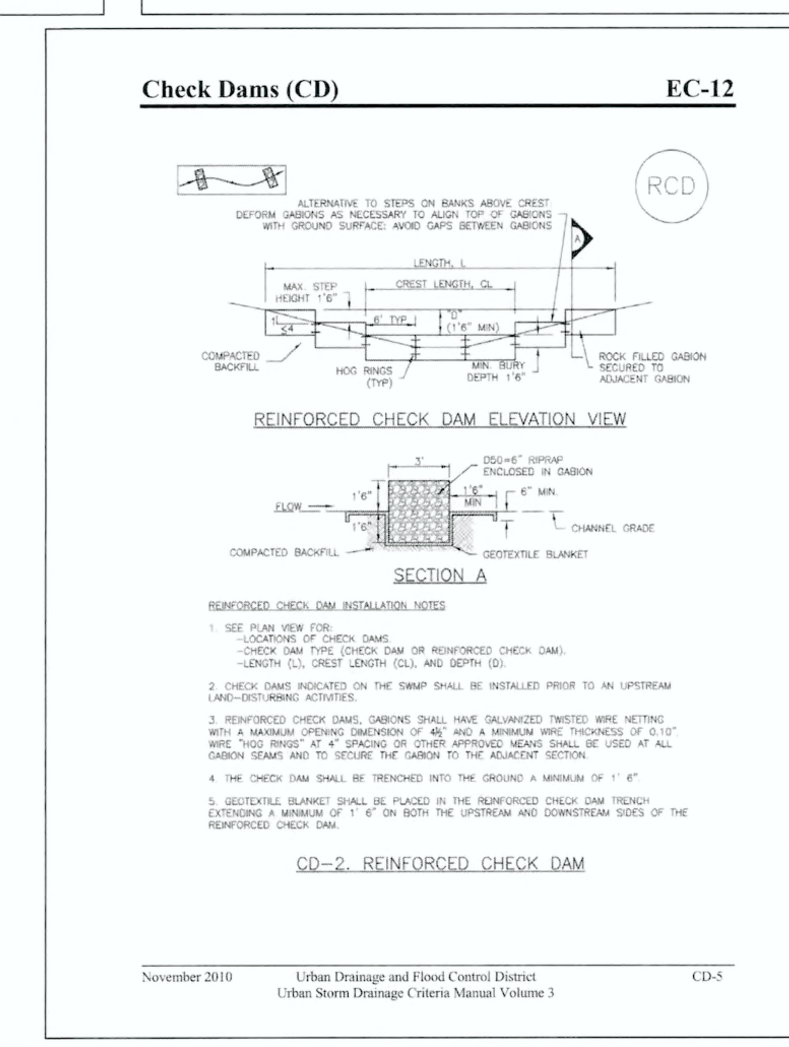

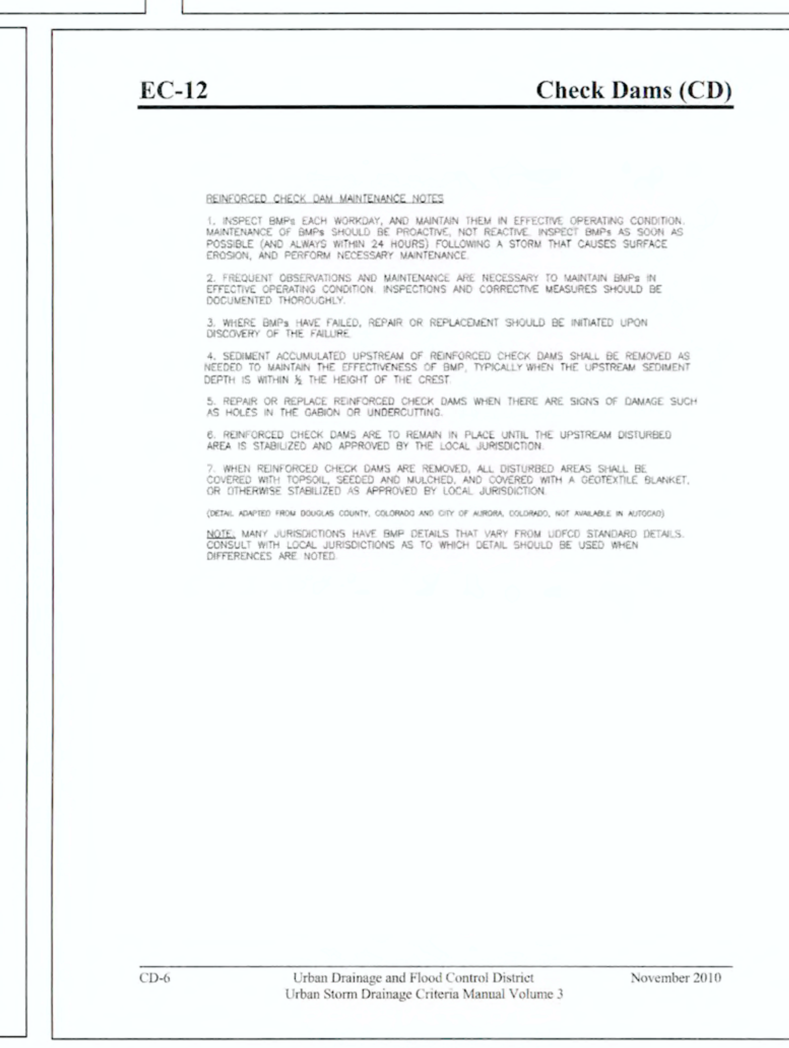
EC-12 Check Dams (CD)

REINFORCED CHECK DAM MAINTENANCE NOTES

1. INSPECT BMPs EACH WORKDAY, AND MAINTAIN THEM IN EFFECTIVE OPERATING CONDITION. MAINTENANCE OF BMPs SHOULD BE PROACTIVE, NOT REACTIVE. INSPECT BMPs AS SOON AS POSSIBLE (AND ALWAYS WITHIN 24 HOURS) FOLLOWING A STORM THAT CAUSES SURFACE EROSION, AND PERFORM NECESSARY MAINTENANCE.

2. FREQUENT OBSERVATIONS AND MAINTENANCE ARE NECESSARY TO MAINTAIN BMPs IN EFFECTIVE OPERATING CONDITION. INSPECTIONS AND CORRECTIVE MEASURES SHOULD BE DOCUMENTED THOROUGHLY.

3. WHERE BMPs HAVE FAILED, REPAIR OR REPLACEMENT SHOULD BE INITIATED UPON DISCOVERY OF THE FAILURE.

4. SEDIMENT ACCUMULATED UPSTREAM OF REINFORCED CHECK DAMS SHALL BE REMOVED AS NEEDED TO MAINTAIN THE EFFECTIVENESS OF BMP, TYPICALLY WHEN THE UPSTREAM SEDIMENT DEPTH IS WITHIN ½ THE HEIGHT OF THE CREST.

5. REPAIR OR REPLACE REINFORCED CHECK DAMS WHEN THERE ARE SIGNS OF DAMAGE SUCH AS HOLES IN THE GABION OR UNDERCUTTING.

6. REINFORCED CHECK DAMS ARE TO REMAIN IN PLACE UNTIL THE UPSTREAM DISTURBED AREA IS STABILIZED AND APPROVED BY THE LOCAL JURISDICTION.

7. WHEN REINFORCED CHECK DAMS ARE REMOVED, ALL DISTURBED AREAS SHALL BE COVERED WITH TOPSOIL, SEEDED AND MULCHED, AND COVERED WITH A GEOTEXTILE BLANKET, OR OTHERWISE STABILIZED AS APPROVED BY LOCAL JURISDICTION.

(DETAIL ADAPTED FROM DOUGLAS COUNTY, COLORADO AND CITY OF AURORA, COLORADO, NOT AVAILABLE IN AUTOCAD)

NOTE: MANY JURISDICTIONS HAVE BMP DETAILS THAT VARY FROM UDFCD STANDARD DETAILS. CONSULT WITH LOCAL JURISDICTIONS AS TO WHICH DETAIL SHOULD BE USED WHEN DIFFERENCES ARE NOTED.

CD-6 Urban Drainage and Flood Control District Urban Storm Drainage Criteria Manual Volume 3 November 2010

EROSION CONTROL CRITERIA:

EROSION CONTROL MEASURES SHALL BE IMPLEMENTED IN A MANNER THAT WILL PROTECT PROPERTIES AND PUBLIC FACILITIES FROM THE ADVERSE EFFECTS OF EROSION AND SEDIMENTATION AS A RESULT OF CONSTRUCTION AND EARTHWORK ACTIVITIES WITHIN THE PROJECT SITE.

1.) THE OMISSION FROM OR THE INCLUSION OF UTILITY LOCATIONS ON THE PLANS IS NOT TO BE CONSIDERED AS THE NON-EXISTENCE OF OR A DEFINITE LOCATION OF EXISTING UNDERGROUND UTILITIES.

2.) DURING GRADING OPERATIONS, LOCATE AND SET THE STRAW BALE CHECK DAMS AND SILT FENCES AS SHOWN ON THE EROSION CONTROL PLAN. AT THIS TIME RESEED ALL DISTURBED AREAS WITH AN EL PASO COUNTY APPROVED SEED MIX.

3.) SEEDING APPLICATION: DRILLED TO A DEPTH OF .25" TO .50" INTO SOIL WHERE POSSIBLE. BROADCAST AND RAKED TO COVER ON STEEPER THAN 3:1 SLOPES WHERE ACCESS IS LIMITED OR UNSAFE FOR EQUIPMENT.

4.) MULCHING REQUIREMENT AND APPLICATION: 1.5 TONS PER ACRE NATIVE HAY MECHANICALLY CRIMPED INTO SOIL.

5.) THE STRAW BALE CHECK DAMS AND SILT FENCES SHALL BE KEPT IN PLACE AND MAINTAINED UNTIL EROSION AND SEDIMENTATION POTENTIAL IS MITIGATED. REMOVAL OF SILT AND SEDIMENT COLLECTED BY THE STRAW BALES IS REQUIRED ONCE IT REACHES HALF THE HEIGHT OF THE STRAW BALES OR SILT FENCE.

6.) DISTURBED SOIL SHALL BE VEGETATED WITHIN 60 DAYS AFTER SUBSTANTIAL FINAL GRADING IS COMPLETE. PROVIDE TEMPORARY VEGETATION TO DISTURBED AREAS THAT WILL HAVE A PERIOD OF EXPOSURE OF 6 MONTHS OR LONGER PRIOR TO FINAL STABILIZATION.

7.) ALL FACILITIES, VEGETATION AND OTHER ITEMS REQUIRED BY THE APPROVED FINAL GRADING, EROSION CONTROL AND RECLAMATION PLAN SHALL BE PROPERLY MAINTAINED BY THE OWNERS OF THE PROPERTY. SUCH MAINTENANCE SHALL INCLUDE, BUT NOT BE LIMITED TO KEEPING ALL EROSION CONTROL FACILITIES IN GOOD ORDER AND FUNCTIONAL, REPAIRING ANY EROSION DAMAGE THAT OCCURS, KEEPING ALL VEGETATION HEALTHY AND IN GROWING CONDITION AND REPLACING ANY DEAD VEGETATION AS SOON AS PRACTICABLE.

8.) ALL SILT FENCES ARE TO BE REGULARLY INSPECTED AND REPAIRED AS NEEDED.

9.) THE CONTRACTOR SHALL PROVIDE VEHICLE TRACKING CONTROL FACILITIES FOR EACH ENTRANCE/EXIT TO THE SITE. THE CONTRACTOR SHALL SUBMIT A PLAN WHICH WILL ASSURE USAGE OF THIS FACILITY BY ALL VEHICLES LEAVING THE SITE.

10.) EROSION CONTROL MEASURES SHALL BE CHECKED AFTER EACH STORM EVENT AND REPAIRED WHEN NECESSARY.

11.) CONTRACTOR SHALL MAINTAIN ALL TEMPORARY EROSION CONTROL FACILITIES IN GOOD WORKING ORDER UNTIL SUCH TIME AS PERMANENT FACILITIES ARE IN PLACE AND THE CONSTRUCTION MANAGER HAS APPROVED THEIR REMOVAL.

12.) ADDITIONAL EROSION CONTROL STRUCTURES MAY BE REQUIRED AT THE TIME OF CONSTRUCTION.

13.) THE EROSION CONTROL MEASURES OUTLINED ON THE PLAN ARE THE RESPONSIBILITY OF THE DEVELOPER TO MONITOR AND REPLACE, REGRADE AND REBUILD AS NECESSARY UNTIL VEGETATION IS ESTABLISHED.

14.) MAXIMUM ACREAGE OPEN AT ANY GIVEN TIME IS TO BE 30 ACRES.

48 HOURS BEFORE YOU DIG,
CALL UTILITY LOCATORS
811
UTILITY NOTIFICATION CENTER OF COLORADO
IT'S THE LAW

THE LOCATIONS OF EXISTING UNDERGROUND UTILITIES ARE SHOWN IN AN APPROXIMATE WAY ONLY. THE CONTRACTOR SHALL DETERMINE THE EXACT LOCATION OF ALL EXISTING UTILITIES BEFORE COMMENCING WORK. THE CONTRACTOR SHALL BE FULLY RESPONSIBLE FOR ANY AND ALL DAMAGES WHICH MIGHT BE CAUSED BY HIS FAILURE TO EXACTLY LOCATE AND PRESERVE ANY AND ALL UNDERGROUND UTILITIES.

NO.	REVISION	DATE

REVIEW:
PREPARED UNDER MY DIRECT SUPERVISION FOR AND ON BEHALF OF CLASSIC CONSULTING ENGINEERS AND SURVEYORS, LLC
COLORADO REGISTERED MARC ALAN WHORTON 37155 PROFESSIONAL ENGINEER
7/10/18
MARC A. WHORTON, COLORADO P.E. #37155 DATE

CLASSIC CONSULTING ENGINEERS & SURVEYORS
619 N. Cascade Avenue, Suite 200 Colorado Springs, Colorado 80903 (719)785-0790 (719)785-0799(Fax)

FLYING HORSE NORTH FILING NO. 1
GRADING AND EROSION CONTROL PLAN
DETAIL SHEET

DESIGNED BY	MAW	SCALE	DATE 12/12/17
DRAWN BY	MAW	(H) 1"= 100'	SHEET 10 OF 10
CHECKED BY		(V) 1"= N/A	JOB NO. 1096.11

N:\109611\DRAWINGS\CONSTRUCTION\Final Grading Plan\109611- GRADING 10.dwg, 7/10/2018 3:46:10 PM, 1:1