STORMWATER MANAGEMENT PLAN
FOR
RIVERBEND CROSSING FILINGS NO 1 & 2

October 2020

Prepared for:

COLORADO DEPARTMENT PUBLIC HEALTH AND ENVIRONMENT
WATER QUALITY CONTROL DIVISION-STORMWATER PROGRAM
WQCD-Permits-B2
4300 Cherry Creek Drive South
Denver, CO 80246-1530

OWNER: Avatar Equities
6800 Jericho Turnpike
Suite 120W #204
Syosset, NY 11791

STORMWATER MANAGER:
Name:_____
Company:_____
Address:_____

CONTRACTOR:
Name:_____
Company:_____
Address:_____

Catamount Engineering Job 17-114

PCD FILE NUMBER: SP187, SF2517, SF2518

PO BOX 221 WOODLAND PARK, CO 80866 • PHONE: (719) 426-2124

STORMWATER MANAGEMENT PLAN
Riverbend Crossing Filings No. 1 & 2

TABLE OF CONTENTS

Purpose	Page 2
Site Description	Page 2
Floodplain Statement	Page 3
Basic Grading, Erosion, and Storm water Requirements	Page 3
Construction Activities	Page 5
BMP Erosion Control Measures	Page 7
Structural Practices	Page 7
Recommended Seed Mix	Page 8
Nonstructural Practices	Page 8
Other Controls	Page 8
Final Stabilization and Long-Term Storm water Quality	Page 9
Inspection and Maintenance	Page 9

APPENDIX

-Vicinity Map
-Recommended BMP Maintenance Inspection Checklist
-Sample Spill Response Plan & Spill Report Form
-Federal, State, or Local Storm water or other Environmental Inspector Site Visit Log
-Details & Drawings

Silt Fence
Rock Sock
Vehicle Tracking Control Pad
Port-o-Let Detail
Stockpile Management
Concrete Wash-out Detail
Stabilized Staging Area
Inlet Protection
Rolled Erosion Control Products
Sediment Control Log
Straw Bale Barrier
Temporary Outlet Protection
Grading & Erosion Control Plan Set

STORMWATER MANAGEMENT PLAN
Riverbend Crossing Filings No. 1 & 2

PURPOSE

The following storm water management plan (SWMP) is a detailed account of the requirements for the CDPS permit. The primary objective of this plan is to prevent storm water contamination during construction activity.

It is estimated that clearing, grading, roadway construction will impact 41.5 acres of the 51.999-acre site. Grading operations will require approximately 194,066 CY of earth be moved. Grading operations are anticipated to commence in Spring, 2026 with final site stabilization proposed in Spring 2027.

This document must be kept at the construction site at all times; and be made available to the public and any representative of the Colorado Department of Health - Water Quality Control Division, if requested.

The Grading & Erosion Control Plans are considered part of this SWMP and are included in the appendix. These plans shall be kept at the site at all times. Modifications to the erosion control plan may be occasionally necessary based on site inspections. Any additions or deletions of erosion control measures should be documented on the site copy of the Grading & Erosion Control Plans.

The development ultimately outfalls to Fountain Creek.

No on-site batch plant is proposed with the development.

SITE DESCRIPTION

The subject 51.999 acres consists of unplatted land to be developed into a residential lots with associated streets. The parcel is located within the Northeast ¼ of Section 14, Township 15 South, Range 66 West of the 6th principal meridian in unincorporated El Paso County.

The parcel is bounded to the north by Lot 1 St. Dominics Catholic Church, to the east by an unplatted commercial center, to the south by Southmoor Road, warehouse/storage developments and unplatted vacant land, and to the west by unplatted charitable residential.

The parcel generally drains from north to the south at approximately 2.4%.

Existing soils on the site consist of Ellicott loamy course sand, hydrologic soil group A (28), Limon clay, hydrologic soil group C (47), Nunn clay loam, hydrologic soil group C (59), and Schamber-Razor complex, hydrologic soil group A (82) as determined by the Natural Resources Conservation Service Web Soil Survey. The site is located within the West Little Johnson Drainage Basin.

The site exhibits 90% groundcover of native grasses. Sparsely located volunteer trees and shrubs are evident on-site and in the roadside ditch adjacent to Southmoor Drive.

FLOODPLAIN STATEMENT

A portion of the site lies within a F.E.M.A. designated floodplain per FIRM 08041C0763 F AND 08041C0951 F, effective date of March 17, 1997.

BASIC GRADING, EROSION AND STORMWATER QUALITY REQUIREMENTS AND GENERAL PROHIBITIONS

*Information taken from the City of Colorado Springs/ El Paso County Drainage Criteria Manual Volume 2, herein referred to as the "Manual."

1. Storm water discharges from construction sites shall not cause or threaten to cause pollution, contamination, or degradation of State Waters.
2. Concrete wash water shall not be discharged to or allowed to runoff to the Municipal Separate Sewer System (MS4).
3. Building, construction, excavation, or other waste materials shall not be temporarily placed or stored in the street, alley, or other public way, unless in accordance with an approved Traffic Control Plan. BMPs may be required by the MS4 Permittee if deemed necessary, based on specific conditions and circumstances (e.g., estimated time of exposure, season of the year, etc.).
4. Vehicle tracking of soils off-site shall be minimized.
5. All wastes composed of building materials must be removed from the construction site for disposal in accordance with local and state regulatory requirements. No building material wastes or unused building materials shall be buried, dumped, or discharged at the site.
6. No chemicals are to be added to the discharge unless permission for the use of a specific chemical is granted by the state. In granting the use of such chemicals, special conditions and monitoring may be required.
7. Bulk storage structures for petroleum products and other chemicals shall have secondary containment or equivalent adequate protection so as to contain all spills and prevent any spilled material from entering the MS4, including any surface or subsurface storm drainage system or facilities.
8. All persons engaged in earth disturbance shall implement and maintain acceptable soil erosion and sediment control measures including BMPs in conformance with the erosion control technical standards of the Drainage Criteria Manual, Volume 2 and in accordance with the approved Erosion and Stormwater Quality Control Plan approved by the MS4 permittee, if required.
9. All temporary erosion control facilities including BMPs and all permanent facilities intended to control erosion of any earth disturbance operations shall be installed as defined in the approved Erosion and Stormwater Quality Control Plan and the Drainage Criteria Manual, Volume 2 and maintained throughout the duration of the earth disturbance operation. The installation of the first level of temporary erosion control

facilities and BMPs shall be installed and inspected prior to any earth disturbance operations taking place.

10. Any earth disturbance shall be conducted in such a manner so as to effectively reduce accelerated soil erosion and resulting sedimentation.
11. All earth disturbances shall be designed, constructed, and completed in such a manner so that the exposed area of any disturbed land shall be limited to the shortest practical period of time.
12. All work and earth disturbance shall be done in a manner that minimizes pollution of any on-site or off-site waters, including wetlands.
13. Suspended sediment caused by accelerated soil erosion shall be minimized in runoff water before it leaves the site of the earth disturbance.
14. Any temporary or permanent facility designed and constructed for the conveyance of stormwater around, through, or from the earth disturbance area shall be designed to limit the discharge to a non-erosive velocity.
15. Temporary soil erosion control facilities shall be removed and earth disturbance areas graded and stabilized with permanent soil erosion control measures pursuant to the standards and specifications prescribed in the Drainage Criteria Manual, Volume 2, and in accordance with the permanent erosion control features shown on the approved Erosion and Stormwater Quality Control Plans approved by the City of Colorado Springs/El Paso County, if required.
16. Soil erosion control measures for all slopes, channels, ditches, or any disturbed land area shall be completed within twenty-one (21) calendar days after final grading, or final earth disturbance, has been completed. Disturbed areas and stockpiles which are not at final grade but will remain dormant for longer than 30 days shall also be mulched within 21 days after interim grading. An area that is going to remain in an interim state for more than 60 days shall also be seeded. On a case-by-case basis, the MS4 permittee may allow appropriate BMP to be in place that prevents sediment from leaving the site. All temporary soil erosion control measures and BMPs shall be maintained until permanent soil erosion control measures are implemented.
17. No person shall cause, permit, or contribute to the discharge into the municipal separate storm sewer pollutants that could cause the MS4 permittee to be in violation of its Colorado Discharge Permit System MS4 Permit.
18. The owner, site developer, contractor, and/or their authorized agents shall be responsible for the removal of all construction debris, dirt, trash, rock, sediment, and sand that may accumulate in the storm sewer or other drainage conveyance system and stormwater appurtenances as a result of site development.
19. No person shall cause the impediment of stormwater flow in the flow line of the curb and gutter, including the temporary or permanent ramping with materials for vehicle access.
20. Individuals shall comply with the "Colorado Water Quality Control Act" (Title 25, Article 8, CRS), and the "Clean Water Act" (33 USC 1344), regulations promulgated, certifications or permits issued, in addition to the requirements included in the Drainage Criteria Manual, Volume 2. In the event of conflicts between these requirements and water quality control laws, rules, or regulations of other Federal or State agencies, the more restrictive laws, rules, or regulations shall apply.
21. The quantity of materials stored on the project site shall be limited, as much as practical, to that quantity required to perform the work in an orderly sequence. All materials stored on-site shall be stored in a neat, orderly manner, in their original containers, with original

manufacturer's labels. Materials shall not be stored in a location where they may be carried by stormwater runoff into the MS4 at any time.

22. Spill prevention and containment measures shall be used at storage, and equipment fueling and servicing areas to prevent pollution from discharging to the MS4. All spills shall be cleaned up immediately after discovery, or contained until appropriate cleanup methods can be employed. Manufacturer's recommended methods for spill cleanup shall be followed, along with proper disposal methods.

CONSTRUCTION ACTIVITIES

The following is a list of major construction activities and the anticipated order of construction.

1. **"Overlot" grading of undeveloped portions of site.**
    a. Install initial erosion control measures.
        i. *Develop Stabilized Staging Area*
        ii. *Vehicle tracking control.*
        iii. *Perimeter silt fence.*
        iv. *Install external erosion control measures.*
            1. Silt fence w/Sediment Control Logs.
    b. Overlot grade portions of the site.
        i. *Strip and stockpile topsoil.*
            1. Install silt fence around topsoil stockpile.
        ii. *Overlot grade site.*
    c. Install remaining site erosion control measures.
        i. *Additional silt fence.*
        ii. *Crimp & mulch.*
        iii. *Rolled Erosion Control Products.*
        iv. *Seed exposed areas not intended for further development*
2. **Site construction**
    a. Wet utility installation (trench & backfill)
        i. *Storm Sewer.*
            1. Install riprap protection at surface discharge points.
    b. Dry utility installation (trench & backfill

It is ultimately the property owner's responsibility to ensure that the work at the site is in compliance with this SWMP, the Grading and Erosion Control Plan, and all applicable statutes and ordinances. For this project the overall property owner is responsible for installing, inspecting, and maintaining all erosion control measures and BMP's during the overlot grading process. Catamount Engineering recommends that the responsibility for compliance be transferred with property ownership to the buyer of any individual lot or other portion of this site. For example, if a retail developer purchases a lot, then that developer should become responsible for compliance with this SWMP and all applicable statutes and ordinances on that lot. Catamount Engineering recommends that the current overall property owner establish an agreement with potential buyers to knowingly transfer this responsibility with property ownership.

The main potential pollutant to Stormwater on this site is sediment.

Other known potential sources of pollution:		Notes
▪ Vehicle fueling…….….	Yes	See Below
▪ Vehicle washing…….....	No	
▪ Vehicle maintenance……	Yes	See Below
▪ Waste incineration, treatment, storage, or disposal……..	No	
▪ Storage of chemical/fertilizers……	No	
▪ Concrete washout ……	Yes	See Below
▪ Other (specify) – Portable Toilets…..……..	Yes	See Below
▪ On-Site Batch plant for construction activities	No	

Non-stormwater components of discharge:		Notes
▪ Landscape irrigation return flow…….….	No	
▪ Springs……..……...	No	
▪ Other (specify)……..	No	

Notes:

- Vehicle Fueling – there is no known vehicle fueling station to be installed or used on this site. However, it is anticipated that construction equipment may be refueled during construction. Spill prevention and containment measures shall be used at equipment fueling and servicing areas to prevent the pollution of any state waters, including wetlands. A sample spill report form is included in the Appendix of this report. All spills shall be cleaned up immediately after discovery, or contained until appropriate cleanup methods can be employed. Manufacturer's recommended methods for spill cleanup shall be followed, along with proper disposal methods. The contractor shall follow the recommendations of the appropriate Hazard Communication Plan of the site construction manager, general contractor, or site superintendent. Vehicle refueling should be done in an area surrounded by an earthen berm to contain any fuel spills. Containment berming should be of sufficient size to safely contain a spill from the largest tank truck or other containment device located inside the possible spill area. In the event of a spill, a method of removal must be provided, such as application of absorbent materials and the use of a pump or vacuum truck. Any material removed from the spill site must be disposed of according to local, state, and federal standards. Stormwater and snowmelt runoff shall be diverted away from the containment berming area. Water that collects within the berming due to rainfall or snowmelt must be treated to meet standards before release from the spill area.
- Vehicle Maintenance – from time to time it may be necessary for the contractor to perform maintenance on the construction equipment being used on the site. If possible, major repairs to construction equipment shall be done off-site. Basic vehicle maintenance shall be performed in the vehicle fueling area and all recommendations listed above shall be followed.
- Concrete wash water shall not be discharged to or allowed to runoff to State Waters, including any surface or subsurface storm drainage system or facilities. Any concrete wash water shall be done in a temporary pit on site. The area around this pit shall be protected per the detail provided and concrete inside the pit shall be removed when done.
- Portable toilets located on the site shall be staked in place using t-posts to prevent them from tipping over during high winds.

SITE MAP

See attached plans.

BMP EROSION CONTROL MEASURES

Steps to prevent sediment from entering the Stormwater discharge system are listed below.

Structural Practices:
Structural sediment control measures include the following:

1. Use of filter fabric silt fencing at site perimeter locations and throughout the site (*before commencement of construction activities*). Silt fence shall also be located around homesites and dirt stockpiles during home building operations. Erosion control measures on individual home sites are the responsibility of the homebuilder. This responsibility should be transferred to the homebuilder with the purchase of any lot. The transfer of erosion control responsibility should be clearly stated in the purchase contract for any lot(s).
2. Straw bale barriers to protect ditches, swales and detention pond outfalls (*immediately after construction of each item*).
3. Vehicle tracking control devices at construction traffic ingress/egress points to prevent sediment tracking onto surrounding streets (*before commencement of construction activities*).
4. All disturbed areas shall have crimped straw installed and shall be reseeded. A recommended seed mix and application rate is included below.
5. All slopes not covered with slope protection erosion control blankets shall be roughened. Roughening shall be performed to follow the contour of the slope, that is, the roughening shall be perpendicular to surface runoff flow direction.
6. Water quality volume and outfall structures in the detention pond can be used as a sedimentation basin (*at beginning of pond construction*). Details of the water quality outfall structures are included in the Appendix of this report. Temporary sedimentation basins shall have straw bale barriers installed in front of the water quality outfall structures during site construction. The contractor should be aware that the sedimentation basins are considered a last line of defense and that the majority of sediment should be contained on the site near the source of the erosion using the other structural sediment control measures described in this report. The contractor shall remove any accumulated sediment prior to landscaping or seeding the ponds.
7. It is recommended that construction haul roads, if used on this site, have small stormwater diversions installed at intermittent locations and low points to prevent rutting and erosion on the roads.

See attached Grading and Erosion Control, and Detail sheets in the Appendix for locations and technical drawings for structural BMP's.

Recommended Seed Mix:
Sandy Soils
30 lbs/ acre

25% Sideoats Gramma
25% Little Bluestem
15% Blue Gramma
15% Prairie Sandreed
20% Switch Grass

Nonstructural Practices:
Temporary or permanent seeding will be employed in all areas disturbed by construction activities. Should excessive blowing of sediment become apparent, then the contractor shall water the site for dust control.

Other Controls:
Contractors shall take steps to keep the site reasonably free from large amounts of construction debris during construction. All waste materials generated by construction activities shall be removed from the site. All wastes composed of building materials must be removed from the construction site for disposal in accordance with local and state regulatory requirements. No building material wastes or unused building materials shall be buried, dumped, or discharged at the site.

Spill prevention and containment measures shall be used at storage, and equipment fueling and servicing areas to prevent the pollution of any state waters, including wetlands. A sample of the spill report form is included in the Appendix of this report. All spills shall be cleaned up immediately after discovery, or contained until appropriate cleanup methods can be employed. Manufacturer's recommended methods for spill cleanup shall be followed, along with proper disposal methods. The contractor shall follow the recommendations of the appropriate Hazard Communication Plan of the site construction manager, general contractor, or site superintendent.

Final Stabilization and Long-Term Stormwater Quality:
Permanent sediment control measures include paving of the streets, installation of riprap, and the installation of landscaping and reseeding with a native grass seed mix. The contractor shall consult the approved Landscape Plan for the proper location, species, and installation methods for landscaping on the site. If the owner reasonably maintains the landscaping and reseeding, then it will provide good soil stability and sediment control. After these permanent measures are installed and final stabilization is achieved, then temporary measures can be removed. Final stabilization is considered achieved when all earth disturbing activities at the site have been

completed and uniform vegetative cover has been established with a density of at least 70% of pre-disturbance levels and such cover is capable of adequately controlling soil erosion.

Inspection and Maintenance:
The site construction manager or site inspector responsible for these measures shall inspect them every 14 days and after every storm event. This report recommends that all erosion control measures on the site are inspected a minimum of once every 7 days, except during winter snow pack conditions where no melting is occurring or when all construction activities are completed. Repairs shall be made within a reasonable timeframe after deficiencies are discovered. A record of all inspections made shall be kept with the SWMP Report for a minimum of 3 years. A sample BMP Checklist is included in the Appendix of this report. See attached Detail sheet for specific maintenance requirements for individual BMP's.

SWMP Revision procedures:
The site construction manager or site inspector responsible for updating the on-site SWMP report to reflect field conditions and project phasing. Upon determination that addition, modification, or deletion of proposed erosion control measures the site construction manager will notify the El Paso County Inspector and the project engineer of proposed modifications. Any field modifications shall be reflected within the on-site copy upon completion of modifications.

APPENDIX

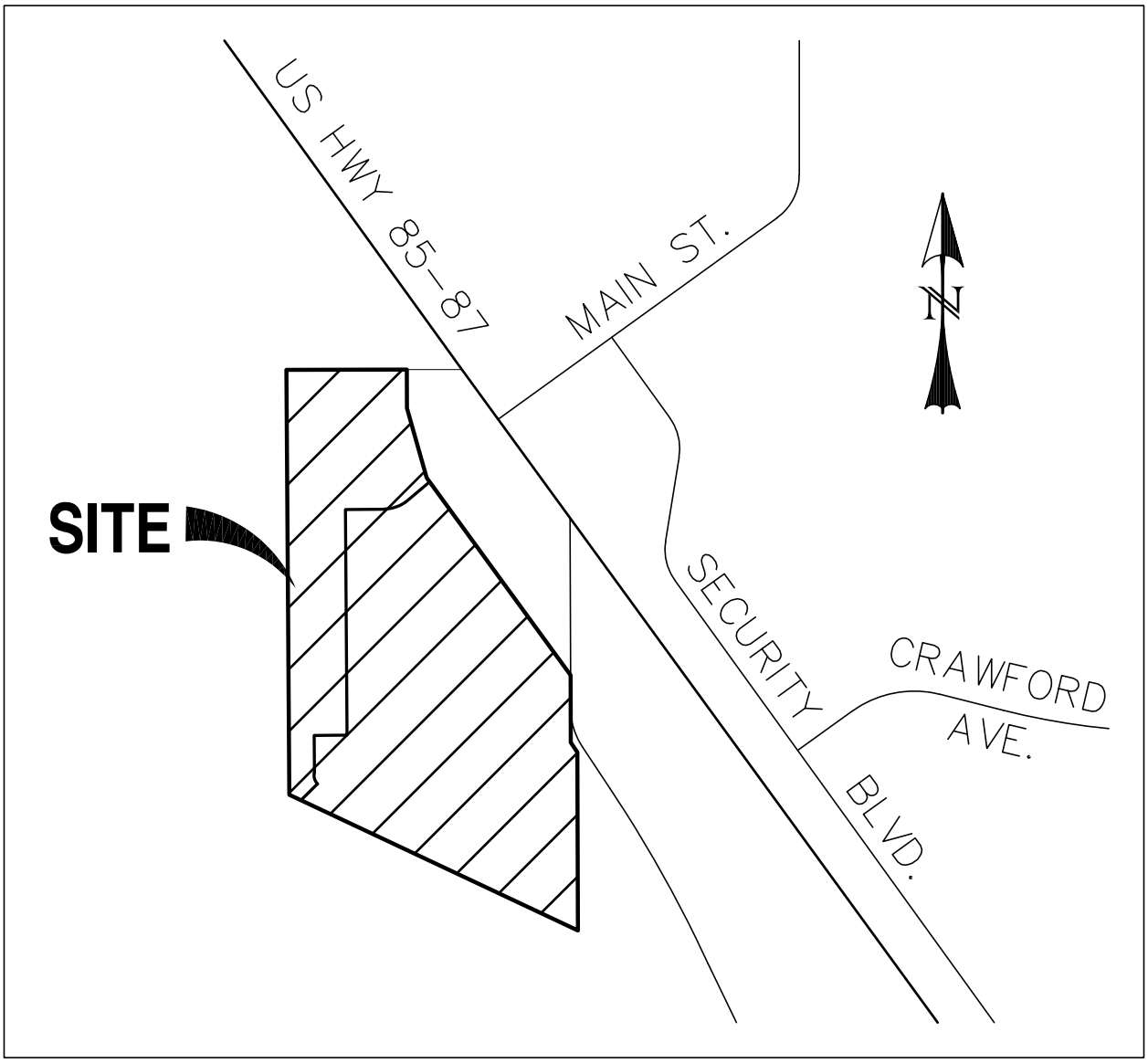

VICINITY MAP

SCALE: N.T.S.

CATAMOUNT ENGINEERING PO BOX 692 DIVIDE, CO 80814 (719) 426-2124	**RIVERBEND CROSSING**	SCALE: NTS	DATE: 09/05/18
	VICINITY MAP	JOB NO.: **17-114**	SHEET: 1 OF 1

RECOMMENDED BMP MAINTENANCE INSPECTION CHECKLIST

Appendix C Inspection Checklist – Grading Erosion, and Stormwater Quality Controls

CITY OF COLORADO SPRINGS

DATE/TIME:
INSPECTOR:
TYPE OF INSPECTION: Self-Monitoring_____ Initial _____ Compliance_____ Follow-Up_____ Reconnaissance_____ Complaint_____ Final___

SITE:	DATE OF PERMIT:
ADDRESS:	
CONTRACTOR: CONTACT: PHONE:	OWNER/OWNER'S REPRESENTATIVE: CONTACT: PHONE:
STAGE OF CONSTRUCTION: Initial BMP Installation/Prior to Construction_____ Clearing & Grubbing_____ Rough Grading_____ Finish Grading_____ Utility Construction_____ Building Construction_____ Final Stabilization_____	

OVERALL SITE INSPECTION	YES/NO/N.A.	REMARKS/ACTIONS
Is there any evidence of sediment leaving the construction site? If so, note areas.		
Have any adverse impacts such as flooding, structural damage, erosion, spillage, or accumulation of sediment, debris or litter occurred on or within public or private property, wetlands or surface waters –to include intermittent drainageways and the City's stormwater system (storm sewers, gutters, ditches, etc.)?		
Are the BMPs properly installed and maintained?		
Have the BMPs been placed as shown on approved plans?		
Are the BMPs functioning as intended?		
Is work being done according to approved plans and any phased construction schedule?		
Is the construction schedule on track?		
Are drainage channels and outlets adequately stabilized?		
Is there any evidence of discharges or spills of fuels, lubricants, chemicals, etc.?		

BMP MAINTENANCE CHECKLIST	YES/NO/N.A.	REMARKS/ACTIONS NECESSARY
CHECK DAM Has accumulated sediment and debris been removed per maintenance requirements?		
EROSION CONTROL BLANKET Is fabric damaged, loose or in need of repairs?		
INLET PROTECTION Is the inlet protection damaged, ineffective or in need of repairs? Has sediment been removed per maintenance requirements?		
MULCHING Distributed uniformly on all disturbed areas? Is the application rate adequate? Any evidence of mulch being blown or washed away? Has the mulched area been seeded, if necessary?		
SEDIMENT BASIN Is the sediment basin properly constructed and operational? Has sediment and debris been cleaned out of the basin?		
SILT FENCE Is the fence damaged, collapsed, unentrenched or ineffective? Has sediment been removed per maintenance requirements? Is the silt fence properly located?		
SLOPE DRAIN Is water bypassing or undercutting the inlet or pipe? Is erosion occurring at the outlet of the pipe?		
STRAW BALE BARRIER Are the straw bales damaged, ineffective or unentrenched? Has sediment been removed per maintenance requirements? Are the bales installed and positioned correctly?		

BMP MAINTENANCE CHECKLIST	YES/NO/N.A.	REMARKS/ACTIONS NECESSARY
SURFACE ROUGHENING Is the roughening consistent/uniform on slopes?? Any evidence of erosion?		
TEMPORARY SEEDING Are the seedbeds protected by mulch? Has any erosion occurred in the seeded area? Any evidence of vehicle tracking on seeded areas?		
TEMPORARY SWALES Has any sediment or debris been deposited within the swales? Have the slopes of the swale eroded or has damage occurred to the lining? Are the swales properly located?		
VEHICLE TRACKING Is gravel surface clogged with mud or sediment? Is the gravel surface sinking into the ground? Has sediment been tracked onto any roads and has it been cleaned up? Is inlet protection placed around curb inlets near construction entrance?		
OTHER		

FINAL INSPECTION CHECKLIST	YES/NO/N.A.	REMARKS/ACTIONS NECESSARY
Has all grading been completed in compliance with the approved Plan, and all stabilization completed, including vegetation, retaining walls or other approved measures?		
Has final stabilization been achieved - uniform vegetative cover with a density of at least 70 percent of pre-disturbance levels, and cover capable of adequately controlling soil erosion; or permanent, physical erosion methods?		
Have all temporary measures been removed?		
Have all stockpiles, construction materials and construction equipment been removed?		
Are all paved surfaces clean (on-site and off-site)?		
Has sediment and debris been removed from drainage facilities (on-site and off-site) and other off-site property, including proper restoration of any damaged property?		
Have all permanent stormwater quality BMPs been installed and completed?		

ADDITIONAL COMMENTS:

The items noted as needing action must be remedied no later than _____.
The contractor shall notify the inspector when all the items noted above have been addressed.

By signing this inspection form, the owner/owner's representative and the contractor acknowledge that they have received a copy of the inspection report and are aware it is their responsibility to take corrective actions by the date noted above. Failure to sign does not relieve the contractor and owner/owner's representative of their responsibility to take the necessary corrective action and of their liability for any damages that have occurred or may occur.

INSPECTOR'S SIGNATURE:	DATE:
OWNER/OWNER'S REPRESENTATIVE SIGNATURE:	DATE:
CONTRACTOR'S SIGNATURE:	DATE:

SAMPLE SPILL RESPONSE PLAN
AND SPILL REPORT FORM

SPILL RESPONSE PLAN

Points of Contact in case of a reportable quantity release:

EPA National Response Center (800) 424-8802

Colorado Department of Public Health and Environment (877) 518-5608

Leak or Spill

- Report spills immediately to owner
- Employees will not be punished for reporting spills
- Contain spill, start cleanup, report if over reportable quantity

REPORTABLE QUANTITIES		
Material	Media Released To	Reportable Quantity
Engine oil, fuel, hydraulic & brake fluid	Land	25 gallons
Engine oil, fuel, hydraulic & brake fluid	Water	Visible Sheen
Antifreeze	Land	100 lbs. (13 gal.)
Battery Acid	Land, Water	100 lbs.
Refrigerant	Air	1 lb.
Gasoline	Air, Land, Water	100 lbs.
Engine Degreasers	Air, Land, Water	100 lbs.

Spill Report Form

Project Type and Location: _____ Store Number: _____

Spill Reported by: _____

Date/Time Spill: _____

Describe spill location and events leading to spill: _____

_____

_____

Material spilled: _____

Source of spill: _____

Amount spilled: _____ Amount spilled to waterway: _____

Containment or clean up action: _____

_____

_____

Approximate depth of soil excavation: _____

List Injuries or Personal Contamination: _____

Action to be taken to prevent future spills: _____

_____

Modifications to the SWPPP necessary due to this spill: _____

_____

Agencies notified of the spill: _____

_____

_____

I certify under penalty of law that this document and all attachments were prepared under my direction or supervision in accordance with a system designed to assure that qualified personnel properly gather and evaluate the information submitted. Based on my inquiry of the person or persons who manage the system, or those persons directly responsible for gathering the information, the information submitted is, to the best of my knowledge and belief, true, accurate, and complete. I am aware that there are significant penalties for submitting false information, including the possibility of fine and imprisonment for knowing violations.

_____ _____

Contractor Superintendent Date

FEDERAL, STATE, OR LOCAL STORM WATER OR OTHER ENVIRONMENTAL INSPECTOR SITE VISIT LOG

DETAILS & DRAWINGS

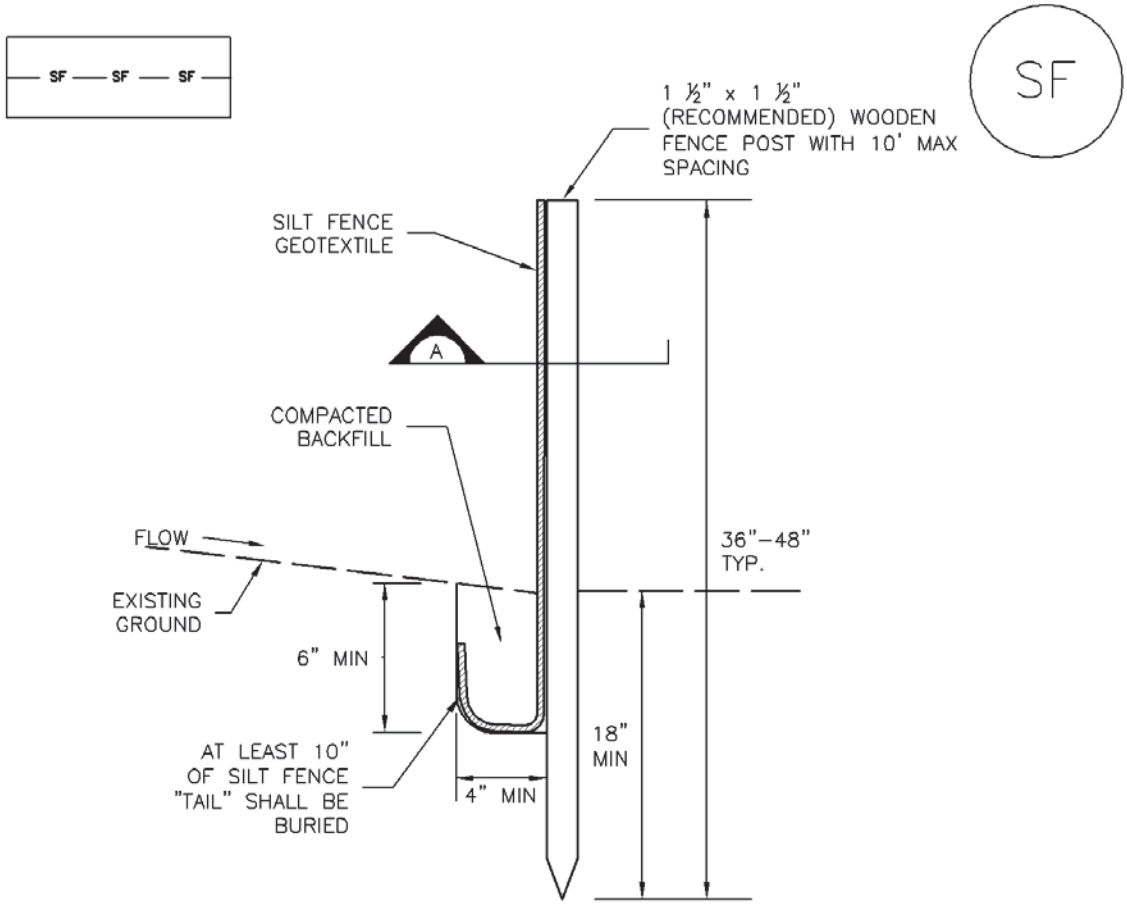

SILT FENCE

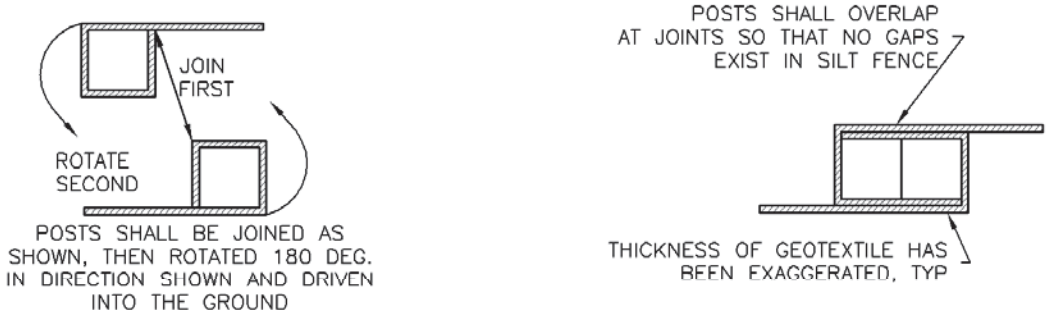

SECTION A

SF–1. SILT FENCE

SILT FENCE INSTALLATION NOTES

1. SILT FENCE MUST BE PLACED AWAY FROM THE TOE OF THE SLOPE TO ALLOW FOR WATER PONDING. SILT FENCE AT THE TOE OF A SLOPE SHOULD BE INSTALLED IN A FLAT LOCATION AT LEAST SEVERAL FEET (2–5 FT) FROM THE TOE OF THE SLOPE TO ALLOW ROOM FOR PONDING AND DEPOSITION.

2. A UNIFORM 6" X 4" ANCHOR TRENCH SHALL BE EXCAVATED USING TRENCHER OR SILT FENCE INSTALLATION DEVICE. NO ROAD GRADERS, BACKHOES, OR SIMILAR EQUIPMENT SHALL BE USED.

3. COMPACT ANCHOR TRENCH BY HAND WITH A "JUMPING JACK" OR BY WHEEL ROLLING. COMPACTION SHALL BE SUCH THAT SILT FENCE RESISTS BEING PULLED OUT OF ANCHOR TRENCH BY HAND.

4. SILT FENCE SHALL BE PULLED TIGHT AS IT IS ANCHORED TO THE STAKES. THERE SHOULD BE NO NOTICEABLE SAG BETWEEN STAKES AFTER IT HAS BEEN ANCHORED TO THE STAKES.

5. SILT FENCE FABRIC SHALL BE ANCHORED TO THE STAKES USING 1" HEAVY DUTY STAPLES OR NAILS WITH 1" HEADS. STAPLES AND NAILS SHOULD BE PLACED 3" ALONG THE FABRIC DOWN THE STAKE.

6. AT THE END OF A RUN OF SILT FENCE ALONG A CONTOUR, THE SILT FENCE SHOULD BE TURNED PERPENDICULAR TO THE CONTOUR TO CREATE A "J–HOOK." THE "J–HOOK" EXTENDING PERPENDICULAR TO THE CONTOUR SHOULD BE OF SUFFICIENT LENGTH TO KEEP RUNOFF FROM FLOWING AROUND THE END OF THE SILT FENCE (TYPICALLY 10' – 20').

7. SILT FENCE SHALL BE INSTALLED PRIOR TO ANY LAND DISTURBING ACTIVITIES.

SILT FENCE MAINTENANCE NOTES

1. INSPECT BMPs EACH WORKDAY, AND MAINTAIN THEM IN EFFECTIVE OPERATING CONDITION. MAINTENANCE OF BMPs SHOULD BE PROACTIVE, NOT REACTIVE. INSPECT BMPs AS SOON AS POSSIBLE (AND ALWAYS WITHIN 24 HOURS) FOLLOWING A STORM THAT CAUSES SURFACE EROSION, AND PERFORM NECESSARY MAINTENANCE.

2. FREQUENT OBSERVATIONS AND MAINTENANCE ARE NECESSARY TO MAINTAIN BMPs IN EFFECTIVE OPERATING CONDITION. INSPECTIONS AND CORRECTIVE MEASURES SHOULD BE DOCUMENTED THOROUGHLY.

3. WHERE BMPs HAVE FAILED, REPAIR OR REPLACEMENT SHOULD BE INITIATED UPON DISCOVERY OF THE FAILURE.

4. SEDIMENT ACCUMULATED UPSTREAM OF THE SILT FENCE SHALL BE REMOVED AS NEEDED TO MAINTAIN THE FUNCTIONALITY OF THE BMP, TYPICALLY WHEN DEPTH OF ACCUMULATED SEDIMENTS IS APPROXIMATELY 6".

5. REPAIR OR REPLACE SILT FENCE WHEN THERE ARE SIGNS OF WEAR, SUCH AS SAGGING, TEARING, OR COLLAPSE.

6. SILT FENCE IS TO REMAIN IN PLACE UNTIL THE UPSTREAM DISTURBED AREA IS STABILIZED AND APPROVED BY THE LOCAL JURISDICTION, OR IS REPLACED BY AN EQUIVALENT PERIMETER SEDIMENT CONTROL BMP.

7. WHEN SILT FENCE IS REMOVED, ALL DISTURBED AREAS SHALL BE COVERED WITH TOPSOIL, SEEDED AND MULCHED OR OTHERWISE STABILIZED AS APPROVED BY LOCAL JURISDICTION.

(DETAIL ADAPTED FROM TOWN OF PARKER, COLORADO AND CITY OF AURORA, NOT AVAILABLE IN AUTOCAD)

NOTE: MANY JURISDICTIONS HAVE BMP DETAILS THAT VARY FROM UDFCD STANDARD DETAILS. CONSULT WITH LOCAL JURISDICTIONS AS TO WHICH DETAIL SHOULD BE USED WHEN DIFFERENCES ARE NOTED.

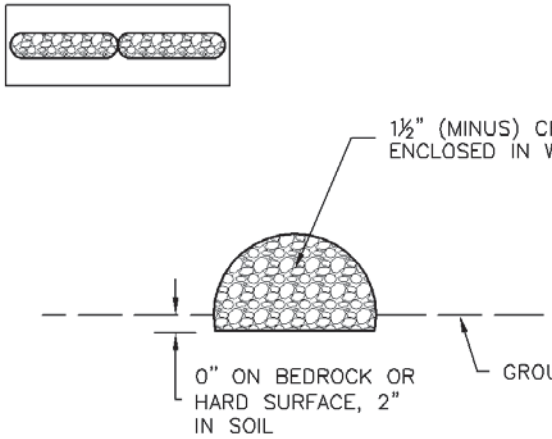

ROCK SOCK SECTION

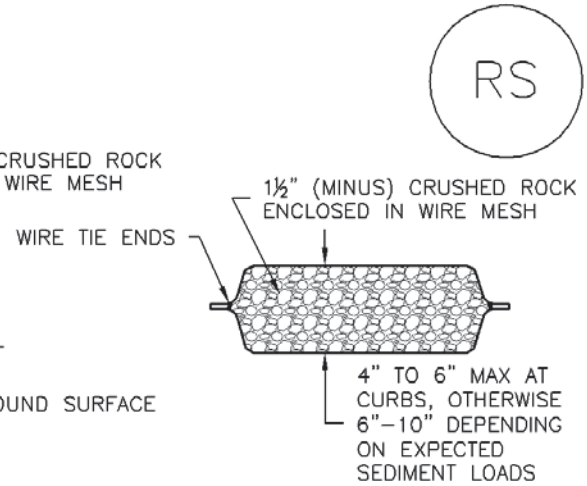

ROCK SOCK PLAN

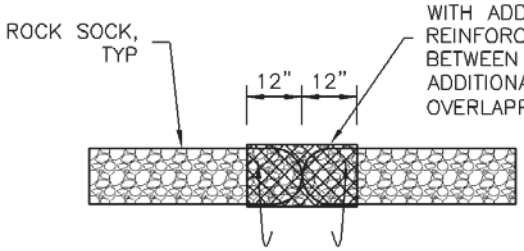

ANY GAP AT JOINT SHALL BE FILLED WITH AN ADEQUATE AMOUNT OF 1½" (MINUS) CRUSHED ROCK AND WRAPPED WITH ADDITIONAL WIRE MESH SECURED TO ENDS OF ROCK REINFORCED SOCK. AS AN ALTERNATIVE TO FILLING JOINTS BETWEEN ADJOINING ROCK SOCKS WITH CRUSHED ROCK AND ADDITIONAL WIRE WRAPPING, ROCK SOCKS CAN BE OVERLAPPED (TYPICALLY 12–INCH OVERLAP) TO AVOID GAPS.

ROCK SOCK JOINTING

GRADATION TABLE	
SIEVE SIZE	MASS PERCENT PASSING SQUARE MESH SIEVES
	NO. 4
2"	100
1½"	90 – 100
1"	20 – 55
¾"	0 – 15
⅜"	0 – 5
MATCHES SPECIFICATIONS FOR NO. 4 COARSE AGGREGATE FOR CONCRETE PER AASHTO M43. ALL ROCK SHALL BE FRACTURED FACE, ALL SIDES.	

ROCK SOCK INSTALLATION NOTES

1. SEE PLAN VIEW FOR:
   –LOCATION(S) OF ROCK SOCKS.

2. CRUSHED ROCK SHALL BE 1½" (MINUS) IN SIZE WITH A FRACTURED FACE (ALL SIDES) AND SHALL COMPLY WITH GRADATION SHOWN ON THIS SHEET (1½" MINUS).

3. WIRE MESH SHALL BE FABRICATED OF 10 GAGE POULTRY MESH, OR EQUIVALENT, WITH A MAXIMUM OPENING OF ½", RECOMMENDED MINIMUM ROLL WIDTH OF 48"

4. WIRE MESH SHALL BE SECURED USING "HOG RINGS" OR WIRE TIES AT 6" CENTERS ALONG ALL JOINTS AND AT 2" CENTERS ON ENDS OF SOCKS.

5. SOME MUNICIPALITIES MAY ALLOW THE USE OF FILTER FABRIC AS AN ALTERNATIVE TO WIRE MESH FOR THE ROCK ENCLOSURE.

RS–1. ROCK SOCK PERIMETER CONTROL

ROCK SOCK MAINTENANCE NOTES

1. INSPECT BMPs EACH WORKDAY, AND MAINTAIN THEM IN EFFECTIVE OPERATING CONDITION. MAINTENANCE OF BMPs SHOULD BE PROACTIVE, NOT REACTIVE. INSPECT BMPs AS SOON AS POSSIBLE (AND ALWAYS WITHIN 24 HOURS) FOLLOWING A STORM THAT CAUSES SURFACE EROSION, AND PERFORM NECESSARY MAINTENANCE.

2. FREQUENT OBSERVATIONS AND MAINTENANCE ARE NECESSARY TO MAINTAIN BMPs IN EFFECTIVE OPERATING CONDITION. INSPECTIONS AND CORRECTIVE MEASURES SHOULD BE DOCUMENTED THOROUGHLY.

3. WHERE BMPs HAVE FAILED, REPAIR OR REPLACEMENT SHOULD BE INITIATED UPON DISCOVERY OF THE FAILURE.

4. ROCK SOCKS SHALL BE REPLACED IF THEY BECOME HEAVILY SOILED, OR DAMAGED BEYOND REPAIR.

5. SEDIMENT ACCUMULATED UPSTREAM OF ROCK SOCKS SHALL BE REMOVED AS NEEDED TO MAINTAIN FUNCTIONALITY OF THE BMP, TYPICALLY WHEN DEPTH OF ACCUMULATED SEDIMENTS IS APPROXIMATELY ½ OF THE HEIGHT OF THE ROCK SOCK.

6. ROCK SOCKS ARE TO REMAIN IN PLACE UNTIL THE UPSTREAM DISTURBED AREA IS STABILIZED AND APPROVED BY THE LOCAL JURISDICTION.

7. WHEN ROCK SOCKS ARE REMOVED, ALL DISTURBED AREAS SHALL BE COVERED WITH TOPSOIL, SEEDED AND MULCHED OR OTHERWISE STABILIZED AS APPROVED BY LOCAL JURISDICTION.

(DETAIL ADAPTED FROM TOWN OF PARKER, COLORADO AND CITY OF AURORA, COLORADO, NOT AVAILABLE IN AUTOCAD)

NOTE: MANY JURISDICTIONS HAVE BMP DETAILS THAT VARY FROM UDFCD STANDARD DETAILS. CONSULT WITH LOCAL JURISDICTIONS AS TO WHICH DETAIL SHOULD BE USED WHEN DIFFERENCES ARE NOTED.

NOTE: THE DETAILS INCLUDED WITH THIS FACT SHEET SHOW COMMONLY USED, CONVENTIONAL METHODS OF ROCK SOCK INSTALLATION IN THE DENVER METROPOLITAN AREA. THERE ARE MANY OTHER SIMILAR PROPRIETARY PRODUCTS ON THE MARKET. UDFCD NEITHER NDORSES NOR DISCOURAGES USE OF PROPRIETARY PROTECTION PRODUCTS; HOWEVER, IN THE EVENT PROPRIETARY METHODS ARE USED, THE APPROPRIATE DETAIL FROM THE MANUFACTURER MUST BE INCLUDED IN THE SWMP AND THE BMP MUST BE INSTALLED AND MAINTAINED AS SHOWN IN THE MANUFACTURER'S DETAILS.

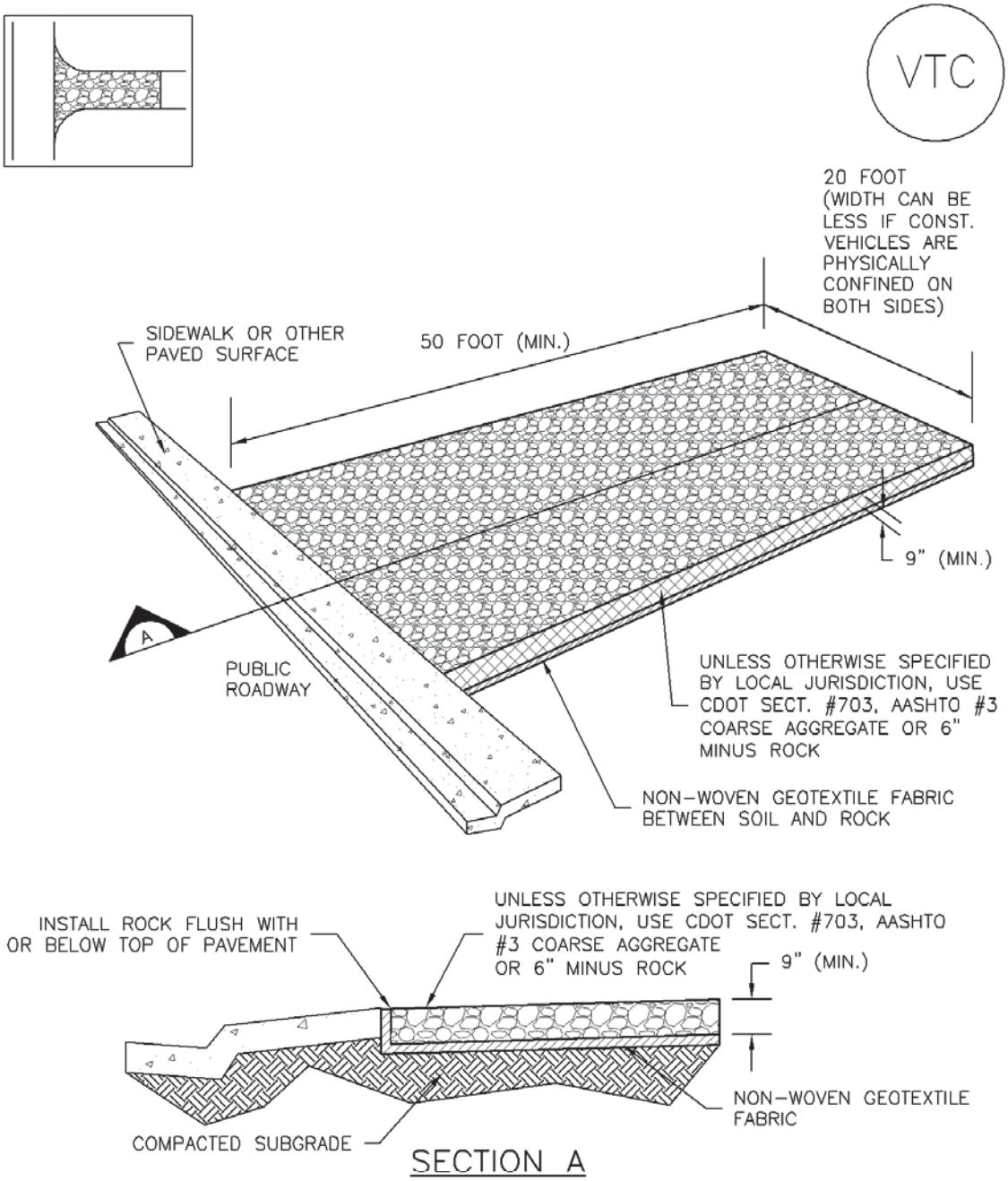

VTC-1. AGGREGATE VEHICLE TRACKING CONTROL

STABILIZED CONSTRUCTION ENTRANCE/EXIT INSTALLATION NOTES

1. SEE PLAN VIEW FOR
   -LOCATION OF CONSTRUCTION ENTRANCE(S)/EXIT(S).
   -TYPE OF CONSTRUCTION ENTRANCE(S)/EXITS(S) (WITH/WITHOUT WHEEL WASH, CONSTRUCTION MAT OR TRM).

2. CONSTRUCTION MAT OR TRM STABILIZED CONSTRUCTION ENTRANCES ARE ONLY TO BE USED ON SHORT DURATION PROJECTS (TYPICALLY RANGING FROM A WEEK TO A MONTH) WHERE THERE WILL BE LIMITED VEHICULAR ACCESS.

3. A STABILIZED CONSTRUCTION ENTRANCE/EXIT SHALL BE LOCATED AT ALL ACCESS POINTS WHERE VEHICLES ACCESS THE CONSTRUCTION SITE FROM PAVED RIGHT-OF-WAYS.

4. STABILIZED CONSTRUCTION ENTRANCE/EXIT SHALL BE INSTALLED PRIOR TO ANY LAND DISTURBING ACTIVITIES.

5. A NON-WOVEN GEOTEXTILE FABRIC SHALL BE PLACED UNDER THE STABILIZED CONSTRUCTION ENTRANCE/EXIT PRIOR TO THE PLACEMENT OF ROCK.

6. UNLESS OTHERWISE SPECIFIED BY LOCAL JURISDICTION, ROCK SHALL CONSIST OF DOT SECT. #703, AASHTO #3 COARSE AGGREGATE OR 6" (MINUS) ROCK.

STABILIZED CONSTRUCTION ENTRANCE/EXIT MAINTENANCE NOTES

1. INSPECT BMPs EACH WORKDAY, AND MAINTAIN THEM IN EFFECTIVE OPERATING CONDITION. MAINTENANCE OF BMPs SHOULD BE PROACTIVE, NOT REACTIVE. INSPECT BMPs AS SOON AS POSSIBLE (AND ALWAYS WITHIN 24 HOURS) FOLLOWING A STORM THAT CAUSES SURFACE EROSION, AND PERFORM NECESSARY MAINTENANCE.

2. FREQUENT OBSERVATIONS AND MAINTENANCE ARE NECESSARY TO MAINTAIN BMPs IN EFFECTIVE OPERATING CONDITION. INSPECTIONS AND CORRECTIVE MEASURES SHOULD BE DOCUMENTED THOROUGHLY.

3. WHERE BMPs HAVE FAILED, REPAIR OR REPLACEMENT SHOULD BE INITIATED UPON DISCOVERY OF THE FAILURE.

4. ROCK SHALL BE REAPPLIED OR REGRADED AS NECESSARY TO THE STABILIZED ENTRANCE/EXIT TO MAINTAIN A CONSISTENT DEPTH.

5. SEDIMENT TRACKED ONTO PAVED ROADS IS TO BE REMOVED THROUGHOUT THE DAY AND AT THE END OF THE DAY BY SHOVELING OR SWEEPING. SEDIMENT MAY NOT BE WASHED DOWN STORM SEWER DRAINS.

NOTE: MANY JURISDICTIONS HAVE BMP DETAILS THAT VARY FROM UDFCD STANDARD DETAILS. CONSULT WITH LOCAL JURISDICTIONS AS TO WHICH DETAIL SHOULD BE USED WHEN DIFFERENCES ARE NOTED.

(DETAILS ADAPTED FROM CITY OF BROOMFIELD, COLORADO, NOT AVAILABLE IN AUTOCAD)

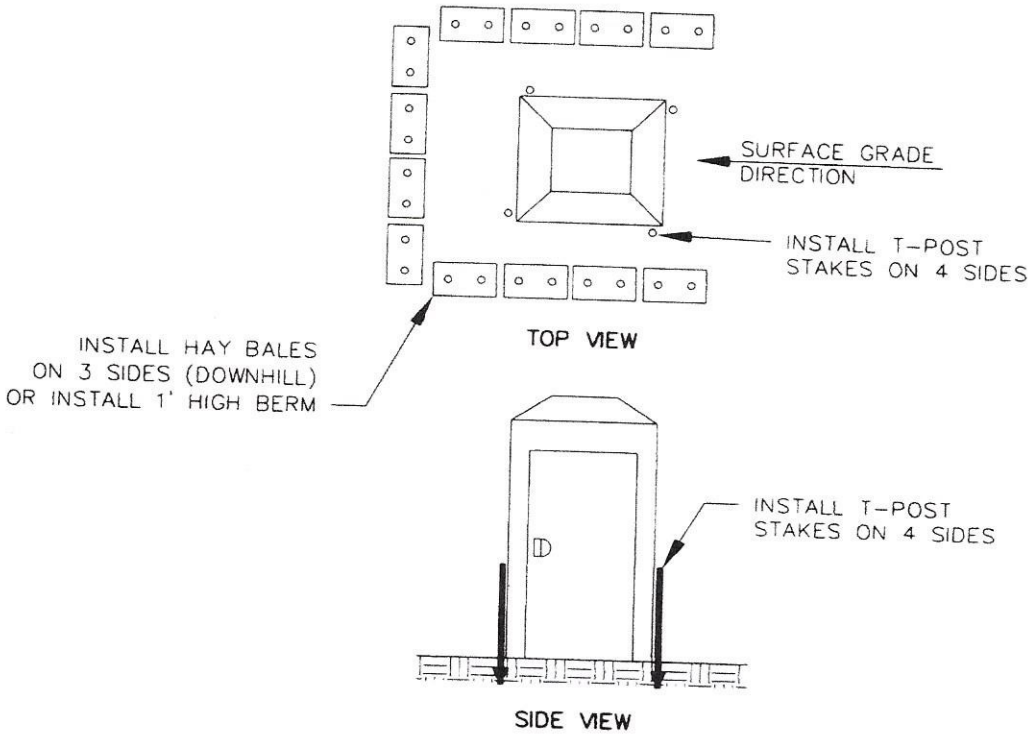

PORT-O-LET DETAIL
N.T.S.

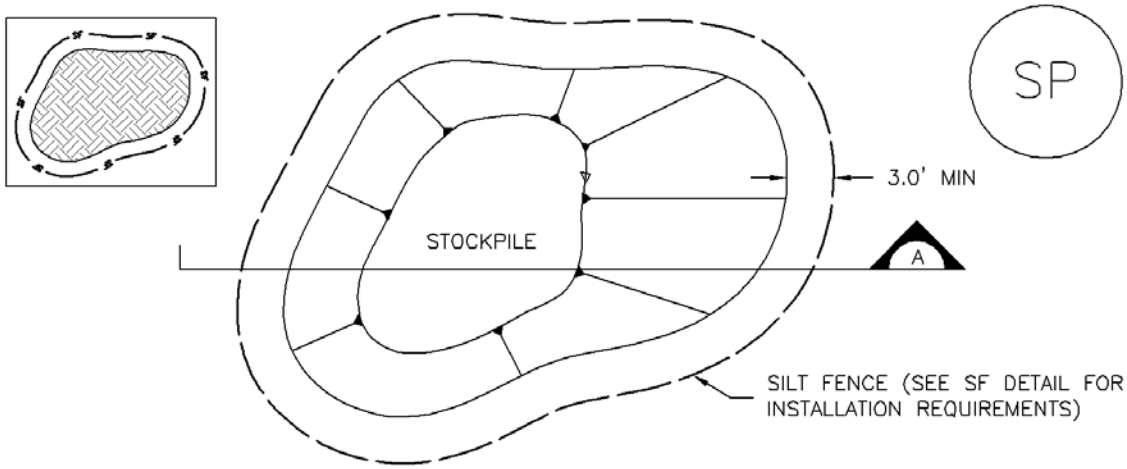

STOCKPILE PROTECTION PLAN

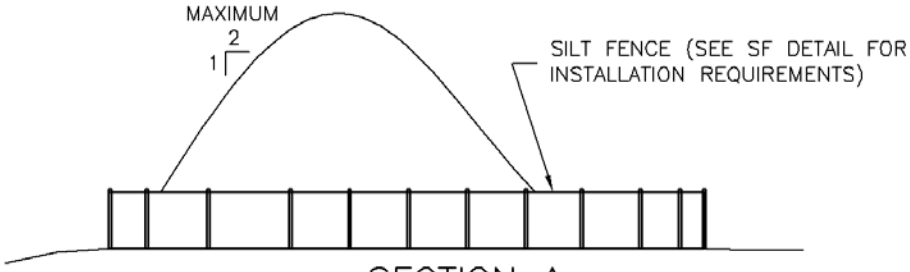

SECTION A

SP–1. STOCKPILE PROTECTION

STOCKPILE PROTECTION INSTALLATION NOTES

1. SEE PLAN VIEW FOR:
   –LOCATION OF STOCKPILES.
   –TYPE OF STOCKPILE PROTECTION.

2. INSTALL PERIMETER CONTROLS IN ACCORDANCE WITH THEIR RESPECTIVE DESIGN DETAILS. SILT FENCE IS SHOWN IN THE STOCKPILE PROTECTION DETAILS; HOWEVER, OTHER TYPES OF PERIMETER CONTROLS INCLUDING SEDIMENT CONTROL LOGS OR ROCK SOCKS MAY BE SUITABLE IN SOME CIRCUMSTANCES. CONSIDERATIONS FOR DETERMINING THE APPROPRIATE TYPE OF PERIMETER CONTROL FOR A STOCKPILE INCLUDE WHETHER THE STOCKPILE IS LOCATED ON A PERVIOUS OR IMPERVIOUS SURFACE, THE RELATIVE HEIGHTS OF THE PERIMETER CONTROL AND STOCKPILE, THE ABILITY OF THE PERIMETER CONTROL TO CONTAIN THE STOCKPILE WITHOUT FAILING IN THE EVENT THAT MATERIAL FROM THE STOCKPILE SHIFTS OR SLUMPS AGAINST THE PERIMETER, AND OTHER FACTORS.

3. STABILIZE THE STOCKPILE SURFACE WITH SURFACE ROUGHENING, TEMPORARY SEEDING AND MULCHING, EROSION CONTROL BLANKETS, OR SOIL BINDERS. SOILS STOCKPILED FOR AN EXTENDED PERIOD (TYPICALLY FOR MORE THAN 60 DAYS) SHOULD BE SEEDED AND MULCHED WITH A TEMPORARY GRASS COVER ONCE THE STOCKPILE IS PLACED (TYPICALLY WITHIN 14 DAYS). USE OF MULCH ONLY OR A SOIL BINDER IS ACCEPTABLE IF THE STOCKPILE WILL BE IN PLACE FOR A MORE LIMITED TIME PERIOD (TYPICALLY 30–60 DAYS).

4. FOR TEMPORARY STOCKPILES ON THE INTERIOR PORTION OF A CONSTRUCTION SITE, WHERE OTHER DOWNGRADIENT CONTROLS, INCLUDING PERIMETER CONTROL, ARE IN PLACE, STOCKPILE PERIMETER CONTROLS MAY NOT BE REQUIRED.

STOCKPILE PROTECTION MAINTENANCE NOTES

1. INSPECT BMPs EACH WORKDAY, AND MAINTAIN THEM IN EFFECTIVE OPERATING CONDITION. MAINTENANCE OF BMPs SHOULD BE PROACTIVE, NOT REACTIVE. INSPECT BMPs AS SOON AS POSSIBLE (AND ALWAYS WITHIN 24 HOURS) FOLLOWING A STORM THAT CAUSES SURFACE EROSION, AND PERFORM NECESSARY MAINTENANCE.

2. FREQUENT OBSERVATIONS AND MAINTENANCE ARE NECESSARY TO MAINTAIN BMPs IN EFFECTIVE OPERATING CONDITION. INSPECTIONS AND CORRECTIVE MEASURES SHOULD BE DOCUMENTED THOROUGHLY.

3. WHERE BMPs HAVE FAILED, REPAIR OR REPLACEMENT SHOULD BE INITIATED UPON DISCOVERY OF THE FAILURE.

STOCKPILE PROTECTION MAINTENANCE NOTES

4. IF PERIMETER PROTECTION MUST BE MOVED TO ACCESS SOIL STOCKPILE, REPLACE PERIMETER CONTROLS BY THE END OF THE WORKDAY.

5. STOCKPILE PERIMETER CONTROLS CAN BE REMOVED ONCE ALL THE MATERIAL FROM THE STOCKPILE HAS BEEN USED.

(DETAILS ADAPTED FROM PARKER, COLORADO, NOT AVAILABLE IN AUTOCAD)

NOTE: MANY JURISDICTIONS HAVE BMP DETAILS THAT VARY FROM UDFCD STANDARD DETAILS. CONSULT WITH LOCAL JURISDICTIONS AS TO WHICH DETAIL SHOULD BE USED WHEN DIFFERENCES ARE NOTED.

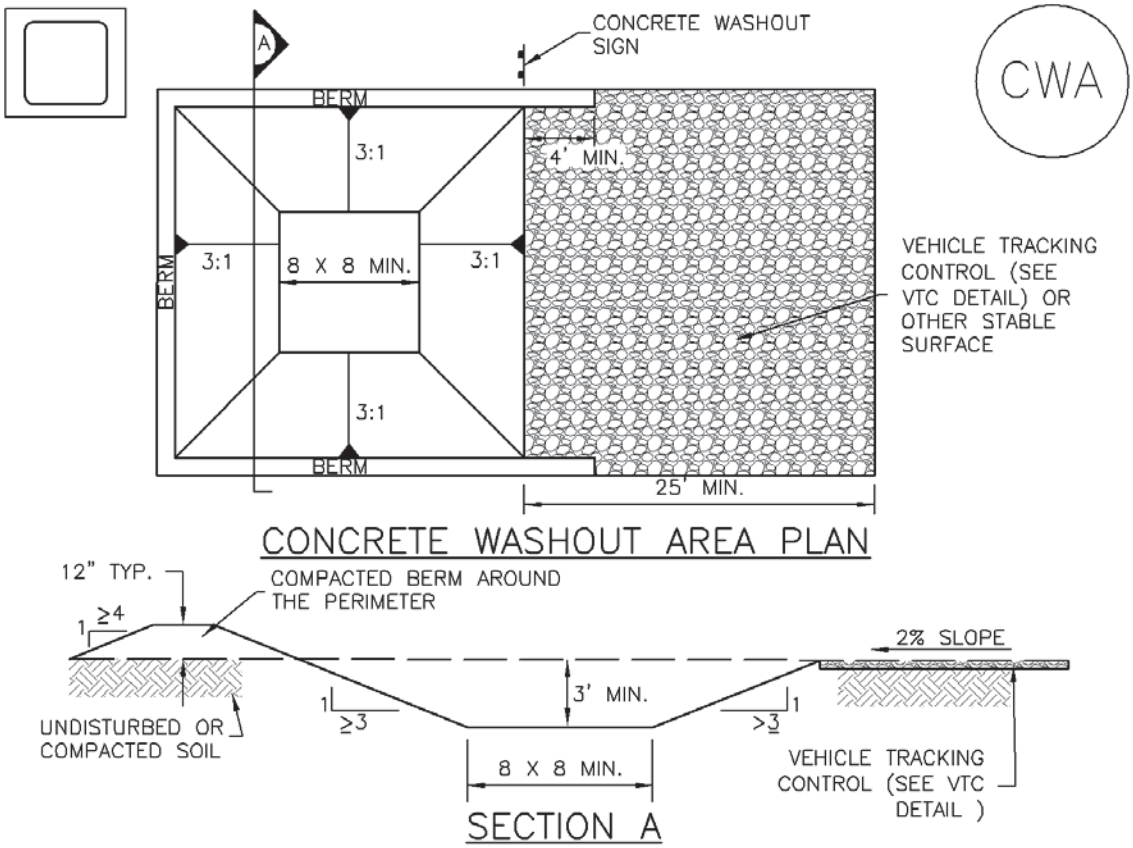

CWA–1. CONCRETE WASHOUT AREA

CWA INSTALLATION NOTES

1. SEE PLAN VIEW FOR:
   –CWA INSTALLATION LOCATION.

2. DO NOT LOCATE AN UNLINED CWA WITHIN 400' OF ANY NATURAL DRAINAGE PATHWAY OR WATERBODY. DO NOT LOCATE WITHIN 1,000' OF ANY WELLS OR DRINKING WATER SOURCES. IF SITE CONSTRAINTS MAKE THIS INFEASIBLE, OR IF HIGHLY PERMEABLE SOILS EXIST ON SITE, THE CWA MUST BE INSTALLED WITH AN IMPERMEABLE LINER (16 MIL MIN. THICKNESS) OR SURFACE STORAGE ALTERNATIVES USING PREFABRICATED CONCRETE WASHOUT DEVICES OR A LINED ABOVE GROUND STORAGE ARE SHOULD BE USED.

3. THE CWA SHALL BE INSTALLED PRIOR TO CONCRETE PLACEMENT ON SITE.

4. CWA SHALL INCLUDE A FLAT SUBSURFACE PIT THAT IS AT LEAST 8' BY 8' SLOPES LEADING OUT OF THE SUBSURFACE PIT SHALL BE 3:1 OR FLATTER. THE PIT SHALL BE AT LEAST 3' DEEP.

5. BERM SURROUNDING SIDES AND BACK OF THE CWA SHALL HAVE MINIMUM HEIGHT OF 1'.

6. VEHICLE TRACKING PAD SHALL BE SLOPED 2% TOWARDS THE CWA.

7. SIGNS SHALL BE PLACED AT THE CONSTRUCTION ENTRANCE, AT THE CWA, AND ELSEWHERE AS NECESSARY TO CLEARLY INDICATE THE LOCATION OF THE CWA TO OPERATORS OF CONCRETE TRUCKS AND PUMP RIGS.

8. USE EXCAVATED MATERIAL FOR PERIMETER BERM CONSTRUCTION.

CWA MAINTENANCE NOTES

1. INSPECT BMPs EACH WORKDAY, AND MAINTAIN THEM IN EFFECTIVE OPERATING CONDITION. MAINTENANCE OF BMPs SHOULD BE PROACTIVE, NOT REACTIVE. INSPECT BMPs AS SOON AS POSSIBLE (AND ALWAYS WITHIN 24 HOURS) FOLLOWING A STORM THAT CAUSES SURFACE EROSION, AND PERFORM NECESSARY MAINTENANCE.

2. FREQUENT OBSERVATIONS AND MAINTENANCE ARE NECESSARY TO MAINTAIN BMPs IN EFFECTIVE OPERATING CONDITION. INSPECTIONS AND CORRECTIVE MEASURES SHOULD BE DOCUMENTED THOROUGHLY.

3. WHERE BMPs HAVE FAILED, REPAIR OR REPLACEMENT SHOULD BE INITIATED UPON DISCOVERY OF THE FAILURE.

4. THE CWA SHALL BE REPAIRED, CLEANED, OR ENLARGED AS NECESSARY TO MAINTAIN CAPACITY FOR CONCRETE WASTE. CONCRETE MATERIALS, ACCUMULATED IN PIT, SHALL BE REMOVED ONCE THE MATERIALS HAVE REACHED A DEPTH OF 2'.

5. CONCRETE WASHOUT WATER, WASTED PIECES OF CONCRETE AND ALL OTHER DEBRIS IN THE SUBSURFACE PIT SHALL BE TRANSPORTED FROM THE JOB SITE IN A WATER–TIGHT CONTAINER AND DISPOSED OF PROPERLY.

6. THE CWA SHALL REMAIN IN PLACE UNTIL ALL CONCRETE FOR THE PROJECT IS PLACED.

7. WHEN THE CWA IS REMOVED, COVER THE DISTURBED AREA WITH TOP SOIL, SEED AND MULCH OR OTHERWISE STABILIZED IN A MANNER APPROVED BY THE LOCAL JURISDICTION.

(DETAIL ADAPTED FROM DOUGLAS COUNTY, COLORADO AND THE CITY OF PARKER, COLORADO, NOT AVAILABLE IN AUTOCAD).

NOTE: MANY JURISDICTIONS HAVE BMP DETAILS THAT VARY FROM UDFCD STANDARD DETAILS. CONSULT WITH LOCAL JURISDICTIONS AS TO WHICH DETAIL SHOULD BE USED WHEN DIFFERENCES ARE NOTED.

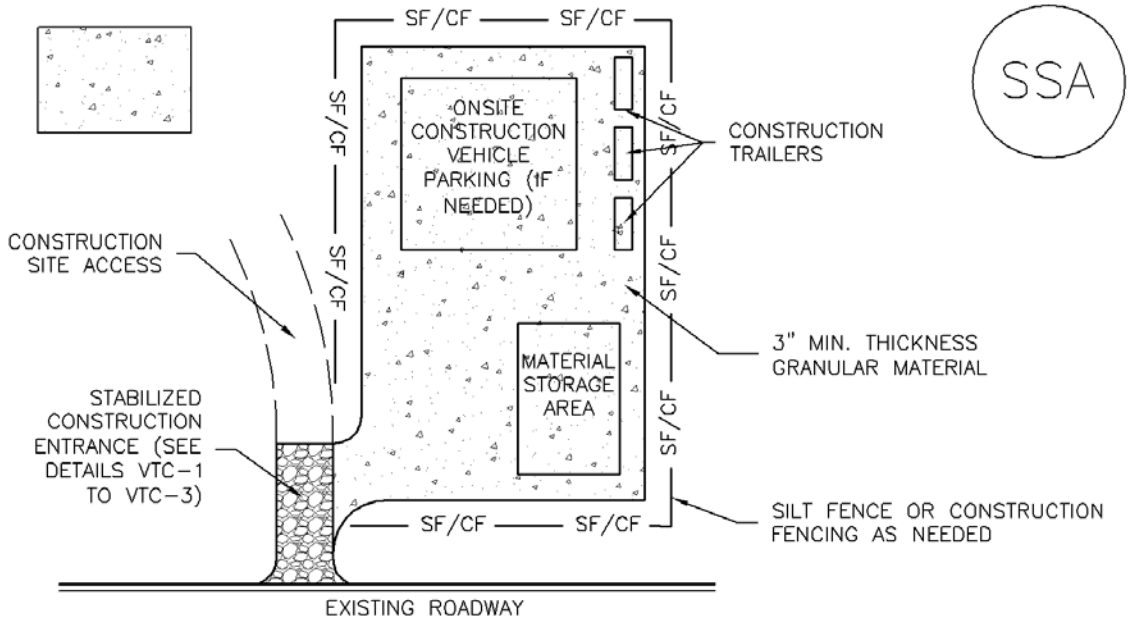

SSA-1. STABILIZED STAGING AREA

STABILIZED STAGING AREA INSTALLATION NOTES

1. SEE PLAN VIEW FOR
   -LOCATION OF STAGING AREA(S).
   -CONTRACTOR MAY ADJUST LOCATION AND SIZE OF STAGING AREA WITH APPROVAL FROM THE LOCAL JURISDICTION.

2. STABILIZED STAGING AREA SHOULD BE APPROPRIATE FOR THE NEEDS OF THE SITE. OVERSIZING RESULTS IN A LARGER AREA TO STABILIZE FOLLOWING CONSTRUCTION.

3. STAGING AREA SHALL BE STABILIZED PRIOR TO OTHER OPERATIONS ON THE SITE.

4. THE STABILIZED STAGING AREA SHALL CONSIST OF A MINIMUM 3" THICK GRANULAR MATERIAL.

5. UNLESS OTHERWISE SPECIFIED BY LOCAL JURISDICTION, ROCK SHALL CONSIST OF DOT SECT. #703, AASHTO #3 COARSE AGGREGATE OR 6" (MINUS) ROCK.

6. ADDITIONAL PERIMETER BMPs MAY BE REQUIRED INCLUDING BUT NOT LIMITED TO SILT FENCE AND CONSTRUCTION FENCING.

STABILIZED STAGING AREA MAINTENANCE NOTES

1. INSPECT BMPs EACH WORKDAY, AND MAINTAIN THEM IN EFFECTIVE OPERATING CONDITION. MAINTENANCE OF BMPs SHOULD BE PROACTIVE, NOT REACTIVE. INSPECT BMPs AS SOON AS POSSIBLE (AND ALWAYS WITHIN 24 HOURS) FOLLOWING A STORM THAT CAUSES SURFACE EROSION, AND PERFORM NECESSARY MAINTENANCE.

2. FREQUENT OBSERVATIONS AND MAINTENANCE ARE NECESSARY TO MAINTAIN BMPs IN EFFECTIVE OPERATING CONDITION. INSPECTIONS AND CORRECTIVE MEASURES SHOULD BE DOCUMENTED THOROUGHLY.

3. WHERE BMPs HAVE FAILED, REPAIR OR REPLACEMENT SHOULD BE INITIATED UPON DISCOVERY OF THE FAILURE.

4. ROCK SHALL BE REAPPLIED OR REGRADED AS NECESSARY IF RUTTING OCCURS OR UNDERLYING SUBGRADE BECOMES EXPOSED.

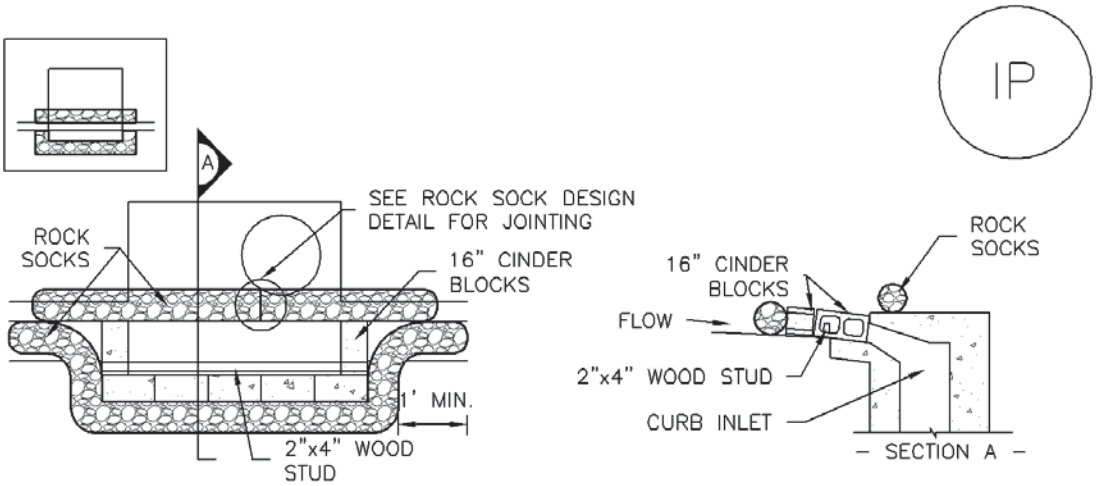

IP–1. BLOCK AND ROCK SOCK SUMP OR ON GRADE INLET PROTECTION

BLOCK AND CURB SOCK INLET PROTECTION INSTALLATION NOTES

1. SEE ROCK SOCK DESIGN DETAIL FOR INSTALLATION REQUIREMENTS.

2. CONCRETE "CINDER" BLOCKS SHALL BE LAID ON THEIR SIDES AROUND THE INLET IN A SINGLE ROW, ABUTTING ONE ANOTHER WITH THE OPEN END FACING AWAY FROM THE CURB.

3. GRAVEL BAGS SHALL BE PLACED AROUND CONCRETE BLOCKS, CLOSELY ABUTTING ONE ANOTHER AND JOINTED TOGETHER IN ACCORDANCE WITH ROCK SOCK DESIGN DETAIL.

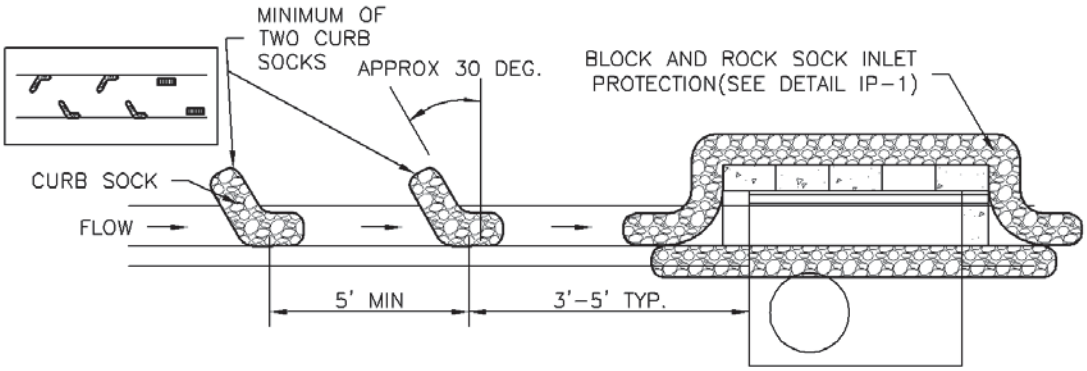

IP–2. CURB ROCK SOCKS UPSTREAM OF INLET PROTECTION

CURB ROCK SOCK INLET PROTECTION INSTALLATION NOTES

1. SEE ROCK SOCK DESIGN DETAIL INSTALLATION REQUIREMENTS.

2. PLACEMENT OF THE SOCK SHALL BE APPROXIMATELY 30 DEGREES FROM PERPENDICULAR IN THE OPPOSITE DIRECTION OF FLOW.

3. SOCKS ARE TO BE FLUSH WITH THE CURB AND SPACED A MINIMUM OF 5 FEET APART.

4. AT LEAST TWO CURB SOCKS IN SERIES ARE REQUIRED UPSTREAM OF ON–GRADE INLETS.

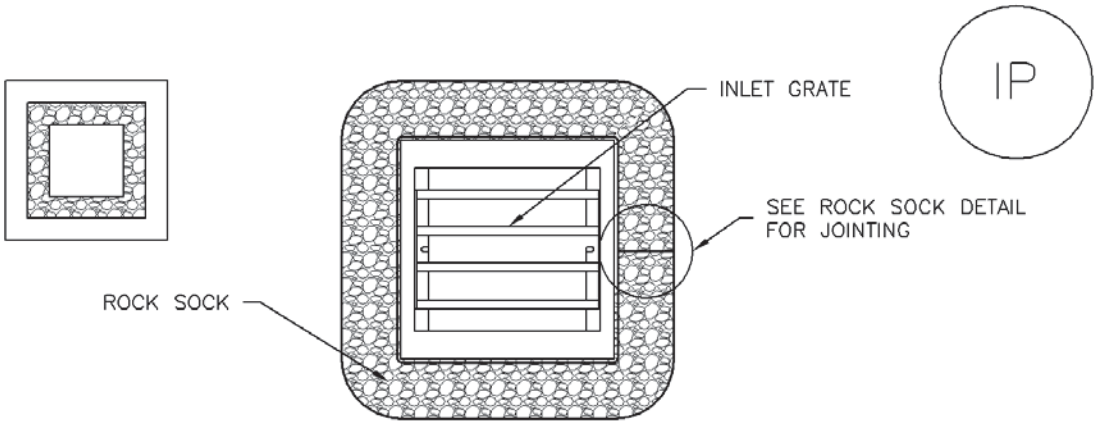

IP–3. ROCK SOCK SUMP/AREA INLET PROTECTION

ROCK SOCK SUMP/AREA INLET PROTECTION INSTALLATION NOTES

1. SEE ROCK SOCK DESIGN DETAIL FOR INSTALLATION REQUIREMENTS.

2. STRAW WATTLES/SEDIMENT CONTROL LOGS MAY BE USED IN PLACE OF ROCK SOCKS FOR INLETS IN PERVIOUS AREAS. INSTALL PER SEDIMENT CONTROL LOG DETAIL.

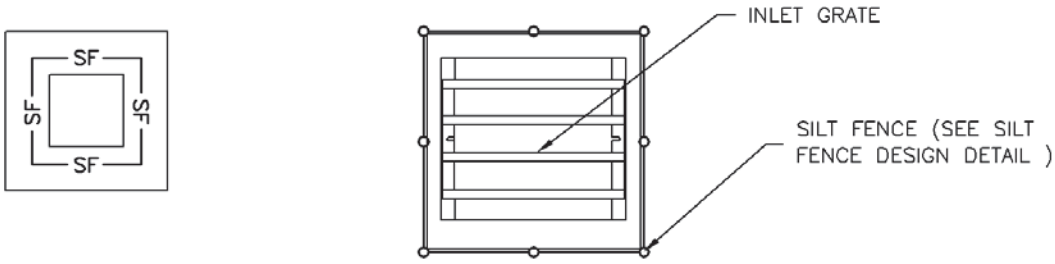

IP–4. SILT FENCE FOR SUMP INLET PROTECTION

SILT FENCE INLET PROTECTION INSTALLATION NOTES

1. SEE SILT FENCE DESIGN DETAIL FOR INSTALLATION REQUIREMENTS.

2. POSTS SHALL BE PLACED AT EACH CORNER OF THE INLET AND AROUND THE EDGES AT A MAXIMUM SPACING OF 3 FEET.

3. STRAW WATTLES/SEDIMENT CONTROL LOGS MAY BE USED IN PLACE OF SILT FENCE FOR INLETS IN PERVIOUS AREAS. INSTALL PER SEDIMENT CONTROL LOG DETAIL.

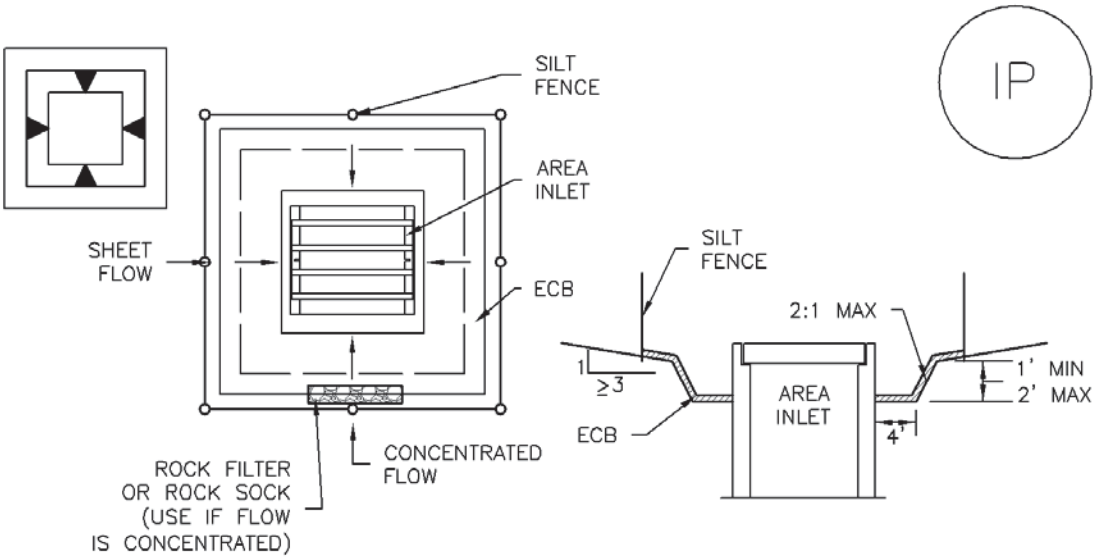

IP–5. OVEREXCAVATION INLET PROTECTION

OVEREXCAVATION INLET PROTECTION INSTALLATION NOTES

1. THIS FORM OF INLET PROTECTION IS PRIMARILY APPLICABLE FOR SITES THAT HAVE NOT YET REACHED FINAL GRADE AND SHOULD BE USED ONLY FOR INLETS WITH A RELATIVELY SMALL CONTRIBUTING DRAINAGE AREA.

2. WHEN USING FOR CONCENTRATED FLOWS, SHAPE BASIN IN 2:1 RATIO WITH LENGTH ORIENTED TOWARDS DIRECTION OF FLOW.

3. SEDIMENT MUST BE PERIODICALLY REMOVED FROM THE OVEREXCAVATED AREA.

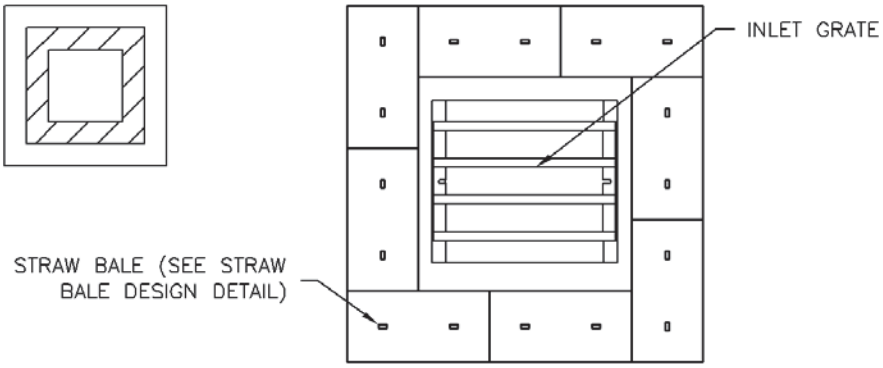

IP–6. STRAW BALE FOR SUMP INLET PROTECTION

STRAW BALE BARRIER INLET PROTECTION INSTALLATION NOTES

1. SEE STRAW BALE DESIGN DETAIL FOR INSTALLATION REQUIREMENTS.

2. BALES SHALL BE PLACED IN A SINGLE ROW AROUND THE INLET WITH ENDS OF BALES TIGHTLY ABUTTING ONE ANOTHER.

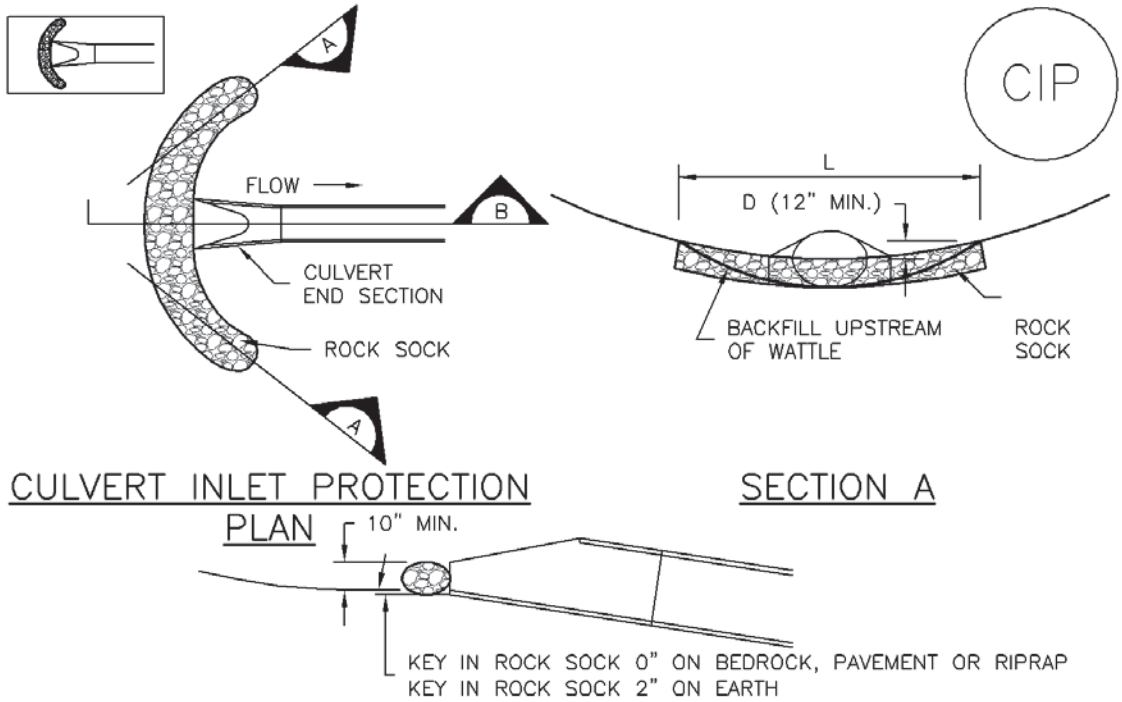

CIP–1. CULVERT INLET PROTECTION

CULVERT INLET PROTECTION INSTALLATION NOTES

1. SEE PLAN VIEW FOR
   –LOCATION OF CULVERT INLET PROTECTION.

2. SEE ROCK SOCK DESIGN DETAIL FOR ROCK GRADATION REQUIREMENTS AND JOINTING DETAIL.

CULVERT INLET PROTECTION MAINTENANCE NOTES

1. INSPECT BMPs EACH WORKDAY, AND MAINTAIN THEM IN EFFECTIVE OPERATING CONDITION. MAINTENANCE OF BMPs SHOULD BE PROACTIVE, NOT REACTIVE. INSPECT BMPs AS SOON AS POSSIBLE (AND ALWAYS WITHIN 24 HOURS) FOLLOWING A STORM THAT CAUSES SURFACE EROSION, AND PERFORM NECESSARY MAINTENANCE.

2. FREQUENT OBSERVATIONS AND MAINTENANCE ARE NECESSARY TO MAINTAIN BMPs IN EFFECTIVE OPERATING CONDITION. INSPECTIONS AND CORRECTIVE MEASURES SHOULD BE DOCUMENTED THOROUGHLY.

3. WHERE BMPs HAVE FAILED, REPAIR OR REPLACEMENT SHOULD BE INITIATED UPON DISCOVERY OF THE FAILURE.

4. SEDIMENT ACCUMULATED UPSTREAM OF THE CULVERT SHALL BE REMOVED WHEN THE SEDIMENT DEPTH IS ½ THE HEIGHT OF THE ROCK SOCK.

5. CULVERT INLET PROTECTION SHALL REMAIN IN PLACE UNTIL THE UPSTREAM DISTURBED AREA IS PERMANENTLY STABILIZED AND APPROVED BY THE LOCAL JURISDICTION.

(DETAILS ADAPTED FROM AURORA, COLORADO, NOT AVAILABLE IN AUTOCAD)

NOTE: MANY JURISDICTIONS HAVE BMP DETAILS THAT VARY FROM UDFCD STANDARD DETAILS. CONSULT WITH LOCAL JURISDICTIONS AS TO WHICH DETAIL SHOULD BE USED WHEN DIFFERENCES ARE NOTED.

GENERAL INLET PROTECTION INSTALLATION NOTES

1. SEE PLAN VIEW FOR:
   - LOCATION OF INLET PROTECTION.
   - TYPE OF INLET PROTECTION (IP.1, IP.2, IP.3, IP.4, IP.5, IP.6)

2. INLET PROTECTION SHALL BE INSTALLED PROMPTLY AFTER INLET CONSTRUCTION OR PAVING IS COMPLETE (TYPICALLY WITHIN 48 HOURS). IF A RAINFALL/RUNOFF EVENT IS FORECAST, INSTALL INLET PROTECTION PRIOR TO ONSET OF EVENT.

3. MANY JURISDICTIONS HAVE BMP DETAILS THAT VARY FROM UDFCD STANDARD DETAILS. CONSULT WITH LOCAL JURISDICTIONS AS TO WHICH DETAIL SHOULD BE USED WHEN DIFFERENCES ARE NOTED.

INLET PROTECTION MAINTENANCE NOTES

1. INSPECT BMPs EACH WORKDAY, AND MAINTAIN THEM IN EFFECTIVE OPERATING CONDITION. MAINTENANCE OF BMPs SHOULD BE PROACTIVE, NOT REACTIVE. INSPECT BMPs AS SOON AS POSSIBLE (AND ALWAYS WITHIN 24 HOURS) FOLLOWING A STORM THAT CAUSES SURFACE EROSION, AND PERFORM NECESSARY MAINTENANCE.

2. FREQUENT OBSERVATIONS AND MAINTENANCE ARE NECESSARY TO MAINTAIN BMPs IN EFFECTIVE OPERATING CONDITION. INSPECTIONS AND CORRECTIVE MEASURES SHOULD BE DOCUMENTED THOROUGHLY.

3. WHERE BMPs HAVE FAILED, REPAIR OR REPLACEMENT SHOULD BE INITIATED UPON DISCOVERY OF THE FAILURE.

4. SEDIMENT ACCUMULATED UPSTREAM OF INLET PROTECTION SHALL BE REMOVED AS NECESSARY TO MAINTAIN BMP EFFECTIVENESS, TYPICALLY WHEN STORAGE VOLUME REACHES 50% OF CAPACITY, A DEPTH OF 6" WHEN SILT FENCE IS USED, OR ¼ OF THE HEIGHT FOR STRAW BALES.

5. INLET PROTECTION IS TO REMAIN IN PLACE UNTIL THE UPSTREAM DISTURBED AREA IS PERMANENTLY STABILIZED, UNLESS THE LOCAL JURISDICTION APPROVES EARLIER REMOVAL OF INLET PROTECTION IN STREETS.

6. WHEN INLET PROTECTION AT AREA INLETS IS REMOVED, THE DISTURBED AREA SHALL BE COVERED WITH TOP SOIL, SEEDED AND MULCHED, OR OTHERWISE STABILIZED IN A MANNER APPROVED BY THE LOCAL JURISDICTION.

(DETAIL ADAPTED FROM TOWN OF PARKER, COLORADO AND CITY OF AURORA, COLORADO, NOT AVAILABLE IN AUTOCAD)

NOTE: MANY JURISDICTIONS HAVE BMP DETAILS THAT VARY FROM UDFCD STANDARD DETAILS. CONSULT WITH LOCAL JURISDICTIONS AS TO WHICH DETAIL SHOULD BE USED WHEN DIFFERENCES ARE NOTED.

NOTE: THE DETAILS INCLUDED WITH THIS FACT SHEET SHOW COMMONLY USED, CONVENTIONAL METHODS OF INLET PROTECTION IN THE DENVER METROPOLITAN AREA. THERE ARE MANY PROPRIETARY INLET PROTECTION METHODS ON THE MARKET. UDFCD NEITHER ENDORSES NOR DISCOURAGES USE OF PROPRIETARY INLET PROTECTION; HOWEVER, IN THE EVENT PROPRIETARY METHODS ARE USED, THE APPROPRIATE DETAIL FROM THE MANUFACTURER MUST BE INCLUDED IN THE SWMP AND THE BMP MUST BE INSTALLED AND MAINTAINED AS SHOWN IN THE MANUFACTURER'S DETAILS.

NOTE: SOME MUNICIPALITIES DISCOURAGE OR PROHIBIT THE USE OF STRAW BALES FOR INLET PROTECTION. CHECK WITH LOCAL JURISDICTION TO DETERMINE IF STRAW BALE INLET PROTECTION IS ACCEPTABLE.

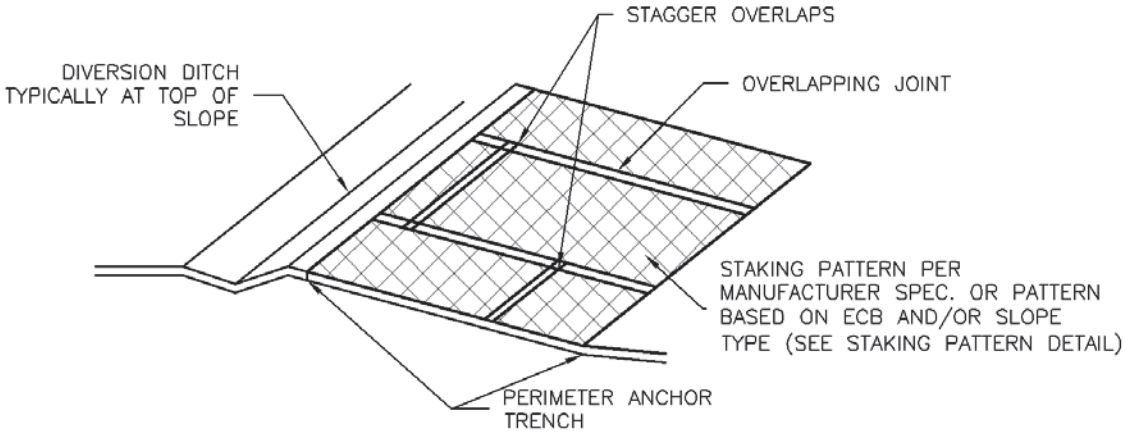

ECB–3. OUTSIDE OF DRAINAGEWAY

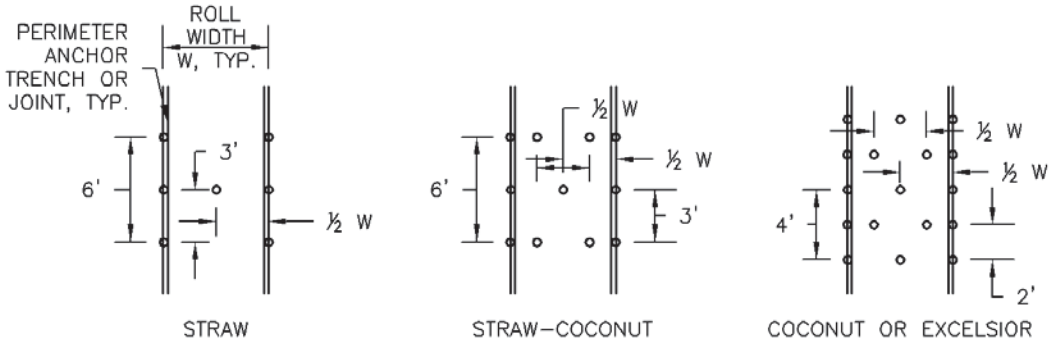

STAKING PATTERNS BY ECB TYPE

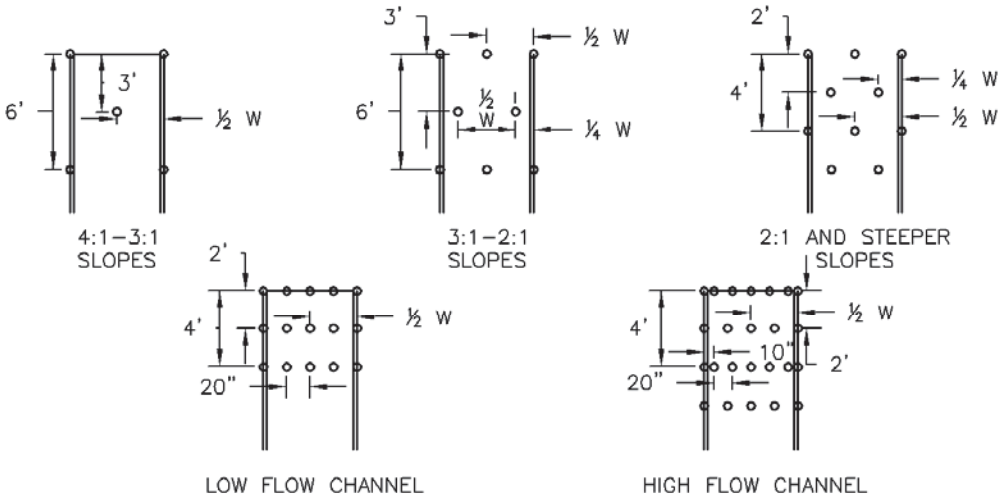

STAKING PATTERNS BY SLOPE OR CHANNEL TYPE

EROSION CONTROL BLANKET INSTALLATION NOTES

1. SEE PLAN VIEW FOR:
   - LOCATION OF ECB.
   - TYPE OF ECB (STRAW, STRAW-COCONUT, COCONUT, OR EXCELSIOR).
   - AREA, A, IN SQUARE YARDS OF EACH TYPE OF ECB.

2. 100% NATURAL AND BIODEGRADABLE MATERIALS ARE PREFERRED FOR RECPs, ALTHOUGH SOME JURISDICTIONS MAY ALLOW OTHER MATERIALS IN SOME APPLICATIONS.

3. IN AREAS WHERE ECBs ARE SHOWN ON THE PLANS, THE PERMITTEE SHALL PLACE TOPSOIL AND PERFORM FINAL GRADING, SURFACE PREPARATION, AND SEEDING AND MULCHING. SUBGRADE SHALL BE SMOOTH AND MOIST PRIOR TO ECB INSTALLATION AND THE ECB SHALL BE IN FULL CONTACT WITH SUBGRADE. NO GAPS OR VOIDS SHALL EXIST UNDER THE BLANKET.

4. PERIMETER ANCHOR TRENCH SHALL BE USED ALONG THE OUTSIDE PERIMETER OF ALL BLANKET AREAS.

5. JOINT ANCHOR TRENCH SHALL BE USED TO JOIN ROLLS OF ECBs TOGETHER (LONGITUDINALLY AND TRANSVERSELY) FOR ALL ECBs EXCEPT STRAW WHICH MAY USE AN OVERLAPPING JOINT.

6. INTERMEDIATE ANCHOR TRENCH SHALL BE USED AT SPACING OF ONE-HALF ROLL LENGTH FOR COCONUT AND EXCELSIOR ECBs.

7. OVERLAPPING JOINT DETAIL SHALL BE USED TO JOIN ROLLS OF ECBs TOGETHER FOR ECBs ON SLOPES.

8. MATERIAL SPECIFICATIONS OF ECBs SHALL CONFORM TO TABLE ECB-1.

9. ANY AREAS OF SEEDING AND MULCHING DISTURBED IN THE PROCESS OF INSTALLING ECBS SHALL BE RESEEDED AND MULCHED.

10. DETAILS ON DESIGN PLANS FOR MAJOR DRAINAGEWAY STABILIZATION WILL GOVERN IF DIFFERENT FROM THOSE SHOWN HERE.

TABLE ECB-1. ECB MATERIAL SPECIFICATIONS

TYPE	COCONUT CONTENT	STRAW CONTENT	EXCELSIOR CONTENT	RECOMMENDED NETTING**
STRAW*	–	100%	–	DOUBLE/ NATURAL
STRAW-COCONUT	30% MIN	70% MAX	–	DOUBLE/ NATURAL
COCONUT	100%	–	–	DOUBLE/ NATURAL
EXCELSIOR	–	–	100%	DOUBLE/ NATURAL

*STRAW ECBs MAY ONLY BE USED OUTSIDE OF STREAMS AND DRAINAGE CHANNEL.
**ALTERNATE NETTING MAY BE ACCEPTABLE IN SOME JURISDICTIONS

EROSION CONTROL BLANKET MAINTENANCE NOTES

1. INSPECT BMPs EACH WORKDAY, AND MAINTAIN THEM IN EFFECTIVE OPERATING CONDITION. MAINTENANCE OF BMPs SHOULD BE PROACTIVE, NOT REACTIVE. INSPECT BMPs AS SOON AS POSSIBLE (AND ALWAYS WITHIN 24 HOURS) FOLLOWING A STORM THAT CAUSES SURFACE EROSION, AND PERFORM NECESSARY MAINTENANCE.

2. FREQUENT OBSERVATIONS AND MAINTENANCE ARE NECESSARY TO MAINTAIN BMPs IN EFFECTIVE OPERATING CONDITION. INSPECTIONS AND CORRECTIVE MEASURES SHOULD BE DOCUMENTED THOROUGHLY.

3. WHERE BMPs HAVE FAILED, REPAIR OR REPLACEMENT SHOULD BE INITIATED UPON DISCOVERY OF THE FAILURE.

4. ECBs SHALL BE LEFT IN PLACE TO EVENTUALLY BIODEGRADE, UNLESS REQUESTED TO BE REMOVED BY THE LOCAL JURISDICTION.

5. ANY ECB PULLED OUT, TORN, OR OTHERWISE DAMAGED SHALL BE REPAIRED OR REINSTALLED. ANY SUBGRADE AREAS BELOW THE GEOTEXTILE THAT HAVE ERODED TO CREATED A VOID UNDER THE BLANKET, OR THAT REMAIN DEVOID OF GRASS SHALL BE REPAIRED, RESEEDED AND MULCHED AND THE ECB REINSTALLED.

NOTE: MANY JURISDICTIONS HAVE BMP DETAILS THAT VARY FROM UDFCD STANDARD DETAILS. CONSULT WITH LOCAL JURISDICTIONS AS TO WHICH DETAIL SHOULD BE USED WHEN DIFFERENCES ARE NOTED.

(DETAILS ADAPTED FROM DOUGLAS COUNTY, COLORADO AND TOWN OF PARKER COLORADO, NOT AVAILABLE IN AUTOCAD)

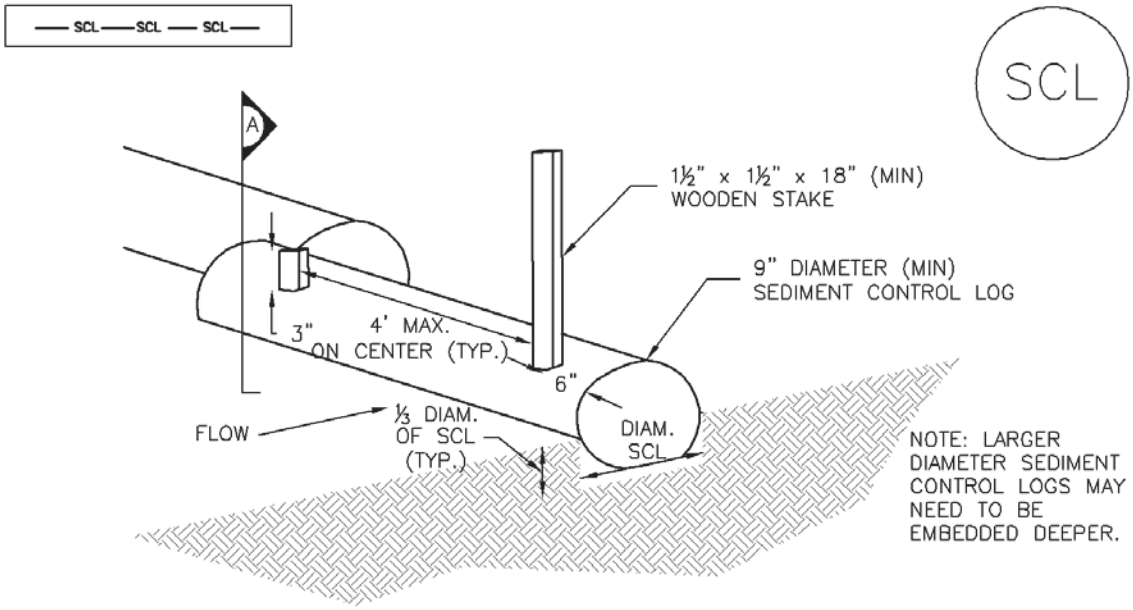

SEDIMENT CONTROL LOG

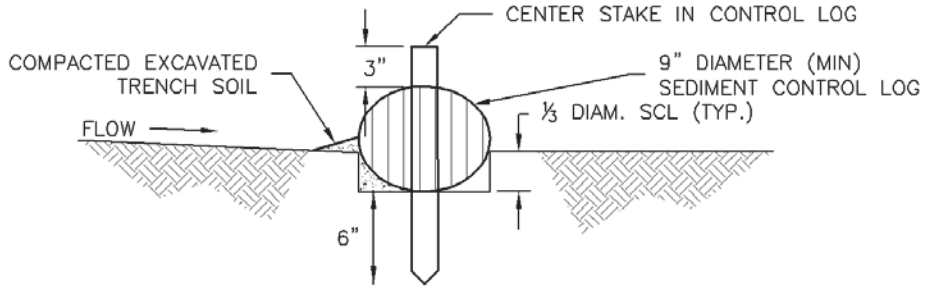

SECTION A

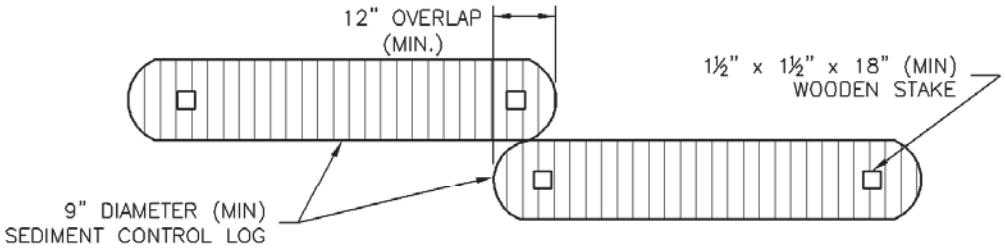

SEDIMENT CONTROL LOG JOINTS

SCL–1. SEDIMENT CONTROL LOG

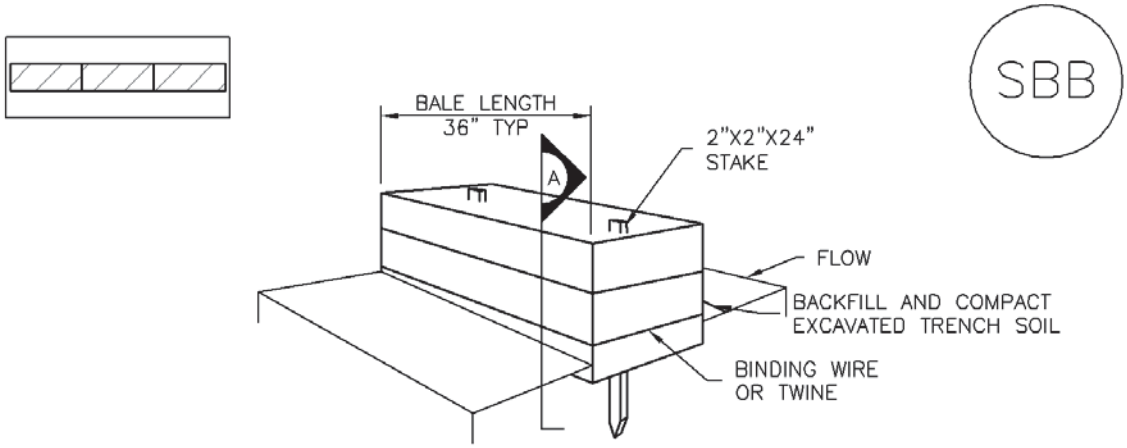

STRAW BALE

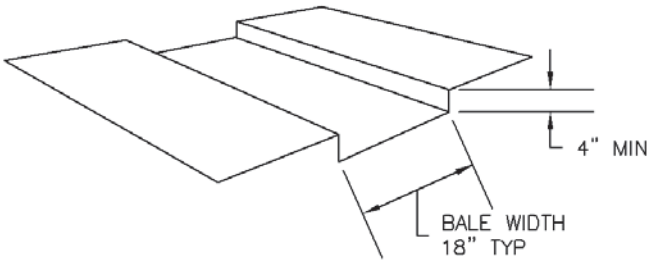

TRENCH FOR STRAW BALE

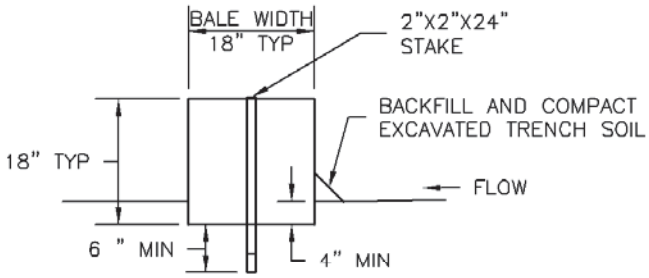

SECTION A

SBB–1. STRAW BALE

STRAW BALE INSTALLATION NOTES

1. SEE PLAN VIEW FOR:
   –LOCATION(S) OF STRAW BALES.

2. STRAW BALES SHALL CONSIST OF CERTIFIED WEED FREE STRAW OR HAY. LOCAL JURISDICTIONS MAY REQUIRE PROOF THAT BALES ARE WEED FREE.

3. STRAW BALES SHALL CONSIST OF APPROXIMATELY 5 CUBIC FEET OF STRAW OR HAY AND WEIGH NOT LESS THAN 35 POUNDS.

4. WHEN STRAW BALES ARE USED IN SERIES AS A BARRIER, THE END OF EACH BALE SHALL BE TIGHTLY ABUTTING ONE ANOTHER.

5. STRAW BALE DIMENSIONS SHALL BE APPROXIMATELY 36"X18"X18".

6. A UNIFORM ANCHOR TRENCH SHALL BE EXCAVATED TO A DEPTH OF 4". STRAW BALES SHALL BE PLACED SO THAT BINDING TWINE IS ENCOMPASSING THE VERTICAL SIDES OF THE BALE(S). ALL EXCAVATED SOIL SHALL BE PLACED ON THE UPHILL SIDE OF THE STRAW BALE(S) AND COMPACTED.

7. TWO (2) WOODEN STAKES SHALL BE USED TO HOLD EACH BALE IN PLACE. WOODEN STAKES SHALL BE 2"X2"X24". WOODEN STAKES SHALL BE DRIVEN 6" INTO THE GROUND.

STRAW BALE MAINTENANCE NOTES

1. INSPECT BMPs EACH WORKDAY, AND MAINTAIN THEM IN EFFECTIVE OPERATING CONDITION. MAINTENANCE OF BMPs SHOULD BE PROACTIVE, NOT REACTIVE. INSPECT BMPs AS SOON AS POSSIBLE (AND ALWAYS WITHIN 24 HOURS) FOLLOWING A STORM THAT CAUSES SURFACE EROSION, AND PERFORM NECESSARY MAINTENANCE.

2. FREQUENT OBSERVATIONS AND MAINTENANCE ARE NECESSARY TO MAINTAIN BMPs IN EFFECTIVE OPERATING CONDITION. INSPECTIONS AND CORRECTIVE MEASURES SHOULD BE DOCUMENTED THOROUGHLY.

3. WHERE BMPs HAVE FAILED, REPAIR OR REPLACEMENT SHOULD BE INITIATED UPON DISCOVERY OF THE FAILURE.

4. STRAW BALES SHALL BE REPLACED IF THEY BECOME HEAVILY SOILED, ROTTEN, OR DAMAGED BEYOND REPAIR.

5. SEDIMENT ACCUMULATED UPSTREAM OF STRAW BALE BARRIER SHALL BE REMOVED AS NEEDED TO MAINTAIN FUNCTIONALITY OF THE BMP, TYPICALLY WHEN DEPTH OF ACCUMULATED SEDIMENTS IS APPROXIMATELY ¼ OF THE HEIGHT OF THE STRAW BALE BARRIER.

6. STRAW BALES ARE TO REMAIN IN PLACE UNTIL THE UPSTREAM DISTURBED AREA IS STABILIZED AND APPROVED BY THE LOCAL JURISDICTION.

7. WHEN STRAW BALES ARE REMOVED, ALL DISTURBED AREAS SHALL BE COVERED WITH TOPSOIL, SEEDED AND MULCHED OR OTHERWISE STABILIZED AS APPROVED BY LOCAL JURISDICTION.

(DETAILS ADAPTED FROM TOWN OF PARKER, COLORADO, NOT AVAILABLE IN AUTOCAD)

NOTE: MANY JURISDICTIONS HAVE BMP DETAILS THAT VARY FROM UDFCD STANDARD DETAILS. CONSULT WITH LOCAL JURISDICTIONS AS TO WHICH DETAIL SHOULD BE USED WHEN DIFFERENCES ARE NOTED.

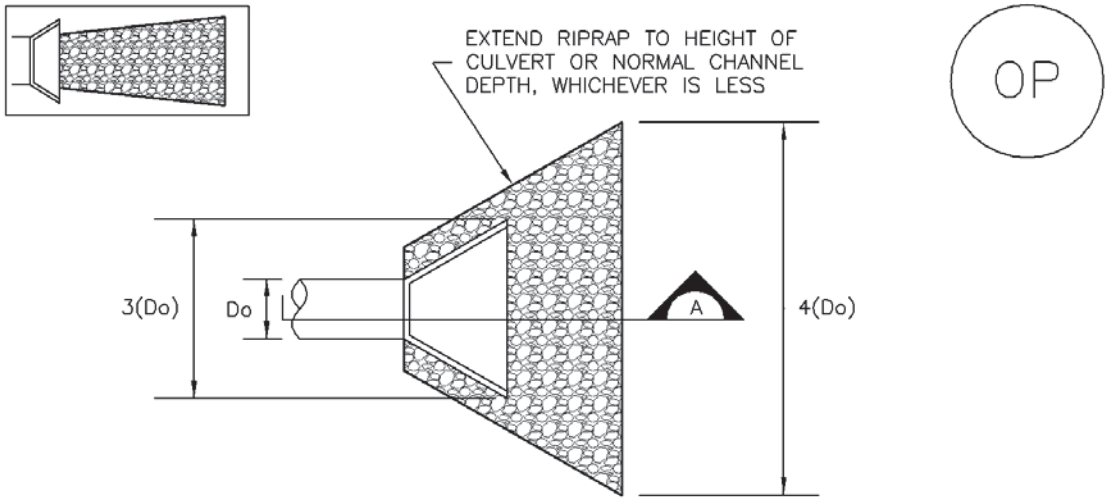

TEMPORARY OUTLET PROTECTION PLAN

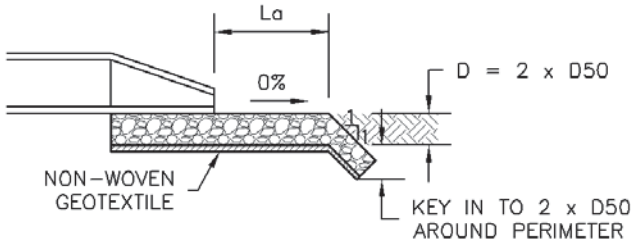

SECTION A

TABLE OP-1. TEMPORARY OUTLET PROTECTION SIZING TABLE			
PIPE DIAMETER, Do (INCHES)	DISCHARGE, Q (CFS)	APRON LENGTH, La (FT)	RIPRAP D50 DIAMETER MIN (INCHES)
8	2.5 5	5 10	4 6
12	5 10	10 13	4 6
18	10 20 30 40	10 16 23 26	6 9 12 16
24	30 40 50 60	16 26 26 30	9 9 12 16

OP-1. TEMPORARY OUTLET PROTECTION

TEMPORARY OUTLET PROTECTION INSTALLATION NOTES

1. SEE PLAN VIEW FOR
   - LOCATION OF OUTLET PROTECTION.
   - DIMENSIONS OF OUTLET PROTECTION.

2. DETAIL IS INTENDED FOR PIPES WITH SLOPE $\leq$ 10%. ADDITIONAL EVALUATION OF RIPRAP SIZING AND OUTLET PROTECTION DIMENSIONS REQUIRED FOR STEEPER SLOPES.

3. TEMPORARY OUTLET PROTECTION INFORMATION IS FOR OUTLETS INTENDED TO BE UTILIZED LESS THAN 2 YEARS.

TEMPORARY OUTLET PROTECTION INSPECTION AND MAINTENANCE NOTES

1. INSPECT BMPs EACH WORKDAY, AND MAINTAIN THEM IN EFFECTIVE OPERATING CONDITION. MAINTENANCE OF BMPs SHOULD BE PROACTIVE, NOT REACTIVE. INSPECT BMPs AS SOON AS POSSIBLE (AND ALWAYS WITHIN 24 HOURS) FOLLOWING A STORM THAT CAUSES SURFACE EROSION, AND PERFORM NECESSARY MAINTENANCE.

2. FREQUENT OBSERVATIONS AND MAINTENANCE ARE NECESSARY TO MAINTAIN BMPs IN EFFECTIVE OPERATING CONDITION. INSPECTIONS AND CORRECTIVE MEASURES SHOULD BE DOCUMENTED THOROUGHLY.

3. WHERE BMPs HAVE FAILED, REPAIR OR REPLACEMENT SHOULD BE INITIATED UPON DISCOVERY OF THE FAILURE.

NOTE: MANY JURISDICTIONS HAVE BMP DETAILS THAT VARY FROM UDFCD STANDARD DETAILS. CONSULT WITH LOCAL JURISDICTIONS AS TO WHICH DETAIL SHOULD BE USED WHEN DIFFERENCES ARE NOTED.

(DETAILS ADAPTED FROM AURORA, COLORADO AND PREVIOUS VERSION OF VOLUME 3, NOT AVAILABLE IN AUTOCAD)