ENTECH
ENGINEERING, INC.
505 ELKTON DRIVE
COLORADO SPRINGS, CO 80907
PHONE (719) 531-5599

October 16, 2024

Altitude Adjustment Construction, LLC
6485 Connaught Drive
Colorado Springs, CO 80908

Attn: John Berkheimer

Re: Soils and Geology Study
Berkheimer Subdivision Filing No. 1
Parcel No. 52060-00-063
14060 Black Forest Road
El Paso County, Colorado
Entech Job No. 241486

Dear Mr. Berkheimer:

The project consists of subdividing 13.55-acres; with two rural residential lots proposed. The existing home on Lot 1 will remain, with one new lot proposed. The site is located southwest of the intersection of Vessey Road and Black Forest Road, in El Paso County.

GENERAL SITE CONDITIONS AND PROJECT DESCRIPTION

The site is located in a portion of the NW¼ of Section 29 Township 11 South, Range 65 West of the 6th Principal Meridian in El Paso County, Colorado. The site is located approximately 3¼ miles northeast of Colorado Springs, Colorado, southwest of the intersection of Vessey Road and Black Forest Road, in El Paso County, Colorado. The location of the site is as shown on the Vicinity Map, Figure 1.

The topography of the site is gradually to moderately sloping to the southwest with moderate to steep slopes along a minor drainage in western portion of the property on Lot 2. Water was not observed in the drainage at the time of this investigation. The site boundaries are indicated on the USGS Map, Figure 2. Previous land uses have included undeveloped agricultural and rural residential. The site contains field grasses, weeds, and ponderosa pines. The existing house with a water well and septic system located on Lot 1, will remain. Site photographs were taken and site mapping was completed on September 12, 2024. Site photographs are included in appendix A.

Total acreage involved in the proposed subdivision is 13.55-acres; two rural residential are proposed. The proposed lot sizes range from 5.0 to 8.5-acres. The existing house located on Lot 1 will remain, and the new lot will be serviced by an individual well and on-site wastewater treatment systems. The Site and Exploration Plan is presented in Figure 3.

LAND USE AND ENGINEERING GEOLOGY

This site was found to be suitable for the proposed development. Areas were encountered where the geologic conditions will impose some constraints on development and land use. These include areas of potentially expansive soils, seasonal shallow groundwater, and potential for elevated radon levels. Based on the proposed development plan, it appears that these areas will have minor impacts on the development. These conditions will be discussed in greater detail in the report.

In general, it is our opinion that the development can be achieved if the observed geologic conditions on site are either avoided or properly mitigated. All recommendations are subject to the limitations discussed in the report.

SCOPE OF THE REPORT

A general geologic analysis utilizing published geologic data. Detailed site-specific mapping will be conducted to obtain general information in respect to major geographic and geologic features, geologic descriptions and their effects on the development of the property.

FIELD INVESTIGATION

Our field investigation consisted of the preparation of a geologic map of bedrock features and significant surficial deposits. The Natural Resource Conservation Service (NRCS), previously the Soil Conservation Service (SCS) survey was also reviewed to evaluate the site. The position of mappable units within the subject property are shown on the Geologic Map. Our mapping procedures involved both field reconnaissance and measurements, and aerial photo reconnaissance and interpretation. The same mapping procedures have also been utilized to produce the Geology/Engineering Geology Map which identified pertinent geologic conditions affecting development. The field mapping was performed by personnel of Entech Engineering, Inc. on September 12, 2024.

Two test borings were drilled, and two test pits were excavated on the site to determine general suitability of the soil characteristics for residential construction. The test borings were drilled in the anticipated house location. The locations of the test borings/pits are indicated on the Site Plan/Test Boring Location Map, Figure 3. The Test Boring and Test Pit Logs are presented in Appendix B. Results of this testing will be discussed later in this report.

Laboratory testing was also performed on some of the soils to classify and determine the soils engineering characteristics. Laboratory tests included grain-size analysis, ASTM D-422. Results of the laboratory testing are included in Appendix C.

SOIL AND GEOLOGIC CONDITIONS

Soil Survey

The Natural Resource Conservation Service (NRCS) (Reference 1, Figure 4), previously the Soil Conservation Service (Reference 2) has mapped three soil types on the site. Complete descriptions of the soil type are presented in Appendix D. In general, the soils consist of sandy loam to loam. The soils are described as follows:

Type	Description
26	Elbeth sandy loam, 8 to 15% slopes
40	Kettle gravelly loamy sand, 3 to 8% slopes
41	Kettle gravelly loamy sand, 8 to 40% slopes

The soils have been described to have rapid permeabilities. The soils are described as well suited for use as home sites. Possible hazards with soils erosion are present on the site. The erosion potential can be controlled with vegetation. The soils have been described to have moderate erosion hazards (Reference 2).

Soils

The soils encountered in the test borings can be grouped into three general soil and rock types. The soils were classified using the Unified Soil Classification System (USCS).

Soil Type 1 is a slightly silty to silty sand (SM-SW, SM). The sand soils were encountered in both of the test borings at existing surface grade and extending to a depth of 8 feet bgs. These soils were encountered at loose to medium dense to dense states and at dry to moist conditions. Samples tested had approximately 8 percent of the soil size particles passing the No. 200 Sieve. Atterberg Limits Testing resulted in a liquid limit of 19 and a plastic index of 2.

Soil Type 2 is a silty sandstone (SM). The sandstone was encountered at an approximate depths of feet bgs and extended to the termination of the borings (15 and 20 feet). The sandstone was encountered at very dense states and moist conditions. Expansive claystone and siltstone is commonly interbedded in the Dawson Formation in the area.

Groundwater

Groundwater was not encountered during or subsequent to drilling in the test borings which were drilled to depths of 15 and 20 feet. Groundwater is not anticipated to affect shallow foundations on the site. The drainage in the western portion of Lot 2 has been identified as a seasonal shallow groundwater area, and is discussed further later in this report. This area lies within a no build/drainage easement. Fluctuations in groundwater conditions may occur due to variations in rainfall or other factors not readily apparent at this time. Isolated sand layers within the soil profile can carry water in the subsurface. Contractors should be cognizant of the potential for the occurrence of subsurface water features during construction.

Geology

Approximately 12 miles west of the site is a major structural feature known as the Rampart Range Fault. This fault marks the boundary between the Great Plains Physiographic Province and the Southern Rocky Mountain Province. The site exists within a large structural feature known as the Denver Basin. Bedrock in the area is typically gently dipping in a northerly direction (Reference 3). The bedrock underlying the site consists of the Dawson Formation of Tertiary to Cretaceous Age. The Dawson Formation typically consists of coarse-grained arkosic sandstone with interbedded layers of claystone or siltstone.

The geology of the site was evaluated using the *Geologic Map of the Black Forest Quadrangle,* by Thorson in 2003, (Reference 4, Figure 5). The Geology Map for the site is presented in Figure 6. Two mappable units were identified on this site which are described as follows:

Qal **Recent Alluvium of Holocene Age:** these are water deposited sands and gravel along the minor drainage in the western portion of the site.

Qc/Tkd **Colluvium of Quaternary Age overlying Dawson Formation of Tertiary to Cretaceous Age:** The materials consist of colluvial or residual soils overlying the bedrock materials on-site. The colluvial soils were deposited by the action of sheetwash and gravity. The residual soils were derived from the in-situ weathering of the bedrock on site. These materials typically consist of silty to clayey sand with potential areas of sandy clays. The bedrock consists of the Dawson Formation. The Dawson Formation typically consists of coarse-grained, arkosic sandstone with interbedded lenses of fine-grained sandstone, siltstone and claystone.

The soils listed above were mapped from site-specific mapping, the *Geologic Map of the Black Forest Quadrangle* distributed by the Colorado Geologic Survey in 2003 (Reference 4, Figure 5), the *Geologic Map of the Colorado Springs-Castle Rock Area,* distributed by the US Geological Survey in 1979 (Reference 5), and the *Geologic Map of the Pueblo 1° x 2° Quadrangle,* distributed by the US Geological Survey in 1978 (Reference 6). The test borings and test pits logs used in evaluating the site and are included in Appendix B. The Geology Map prepared for the site is presented in Figure 6.

ENGINEERING GEOLOGIC HAZARDS

Mapping has been performed on this site to identify areas where various geologic conditions exist of which builders should be cognizant during the planning, design and construction stages where new construction is proposed. The engineering geologic constraints/hazards identified on this site include potentially expansive soils, downslope creep, areas potential seasonally shallow groundwater, and shallow bedrock. These hazards and recommended mitigation techniques are discussed as follows:

Expansive Soils – Constraint

Expansive soils were not encountered in the test borings, however, bedrock underlying the site consist of the Dawson Formation of Cretaceous Age, which consists of coarse-grained arkosic sandstone with interbedded layers of claystone or siltstone. Expansive clays or claystone, if encountered beneath foundations, can cause differential movement in the structure foundation.
Mitigation: Should expansive soils be encountered beneath the foundation; mitigation will be necessary. Mitigation of expansive soils will require special foundation design. Overexcavation and replacement with non-expansive soils at a minimum of 95% of its maximum Modified Proctor Dry Density, ASTM D-1557 is a suitable mitigation, which is common in the area. Floor slabs on expansive soils should be expected to experience movement. Overexcavation and replacement has been successful in minimizing slab movements.

Landslide Hazard, and Slope Stability

Slopes observed on the site are gradually to moderately sloping to the southwest with steeper slopes located along portions of the drainages. The slopes in the anticipated building area of the site are gradually to moderately sloping to the south and no signs of instability were observed on the site. Steeper slopes along the drainage are located within the no build/drainage easement area and will be avoided.

Groundwater and Floodplain Areas – Constraint

The site is not mapped within any floodplains according to the FEMA Map No. 08041C0315G, dated December 7, 2018 (Figure 8, Reference 6). A minor drainage is located in the western portion of the site that has been identified as a seasonal shallow groundwater are, but was dry at the time of our initial site visit. This area is a no build/drainage easement and will be avoided. This area is discussed as follows

Seasonally Shallow Groundwater Area – Constraint

In these areas, we would anticipate the potential for periodically high subsurface moisture conditions and frost heave potential. Water was not observed in any of the drainages at the time of our site investigation. These areas will be avoided by development. The potential exists for high groundwater levels during high moisture periods and should structures encroach on these areas the following precautions should be followed. A minimum separation of 3 feet between foundation components and groundwater levels are recommended.
Mitigation: Foundations must have a minimum 30-inch depth for frost protection. In areas where high subsurface moisture conditions are anticipated periodically, subsurface perimeter drains are

recommended to help prevent the intrusion of water into areas below grade. Typical drain details are presented in Figure 8. If shallow groundwater is encountered, underslab drains or interceptor drains may be necessary Figures 9 and 10. Specific drainage details and recommendations should be made once building locations and plans are finalized. Any grading in these areas should be done to direct surface flow around construction to avoid areas of ponded water. All organic material would be completely removed prior to any fill placement. Specific drainage studies are beyond the scope of this report.

Shallow Bedrock – Constraint

Bedrock was encountered in the test borings at approximately 8 feet bgs. Where shallow bedrock is encountered, excavation/grading may be difficult requiring track-mounted excavators with ripper attachments. Bedrock will likely be encountered in the proposed building excavation. In areas of shallow bedrock, the potential for perched groundwater conditions exist. Where perched groundwater is encountered, underslab drains or interceptor drains may be necessary Figures 9 and 10.

Faults – Hazard

The closest fault is the Rampart Range Fault, located approximately 12 miles west of the site (Reference 3). No faults are mapped in the site itself. Previously, Colorado was mapped entirely within Seismic Zone 1, a very low seismic risk. Additionally, the International Residential Code (IRC), 2003, currently places this area in Seismic Design Category B, also a low seismic risk. According to a report by the Colorado Geological Survey by Kirkman and Rogers, Bulletin 43 (1981) (Reference 7), this area should be designed for Zone 2 due to more recent data on the potential for movement in this area and any resultant earthquakes.

Radon – Hazard

Radon is a colorless, tasteless radioactive gas with a United States Environmental Protection Agency (EPA) specified action level of 4.0 picocuries per liter (pCi/L) of air. Radon gas has a very short half-life of 3.8 days. Radon levels for the area have been reported by the Colorado Geologic Survey in the open file, Report No. 91-4 (Reference 9). Average Radon levels for the 80908-zip code is 3.40 pCi/l. The following is a table of radon levels in this area:

Average Radon Levels for the 80908 Zip Code	
0 < 4 pCi/L	50.00%
4 < 10 pCi/L	50.00%
10 < 20 pCi/L	0.00%
> 20 pCi/L	0.00%

Mitigation:

The potential for high radon levels is present for the site. Build-up of radon gas can usually be mitigated by providing increased ventilation of basement and crawlspace and sealing joints. Specific requirements for mitigation should be based on site specific testing.

RELEVANCE OF GEOLOGIC CONDITIONS TO LAND USE PLANNING

The proposed development will consist of subdividing the 13.55-acre parcel into two rural residential lots. The proposed lot sizes range from 5.0 to 8.5-acres. The existing house located on Lot 1 will remain, and the new lot will be serviced by an individual well and on-site wastewater treatment system. The existing geologic and engineering geologic conditions will impose minor

constraints on development and construction. The geologic conditions on the site include potentially expansive soils, seasonal shallow groundwater, and potential for elevated radon levels, which can be satisfactorily mitigated through avoidance or proper engineering design and construction practices.

The upper granular soils encountered in the test borings on the site were encountered at loose to medium dense states, and the sandstone was encountered at very dense states. Sandstone bedrock was encountered at 8 feet bgs in the test borings. High allowable bearing capacities should be expected in areas of shallow bedrock. Difficult excavation of the very dense sandstone should be expected. These soils will not prohibit development.

The sands and sandstone encountered in the test borings are considered to have low expansion potential, however, highly expansive claystone and siltstone are commonly interbedded in the sandstone of the Dawson Formation. Mitigation of expansive soils if encountered will be required. Overexcavation and replacement with non-expansive soils at a minimum of 95% of its maximum Modified Proctor Dry Density, ASTM D-1557 is a suitable mitigation, which is common in the area. Overexcavation depths of 3 to 4 feet are typical for the expansive soils encountered in the area. Floor slabs on expansive soils should be expected to experience movement. Overexcavation and replacement has been successful in minimizing slab movements. These soils will not prohibit development.

Areas of seasonally shallow groundwater were observed on the site (Figure 6). In these areas, we would anticipate the potential for periodically high subsurface moisture conditions and frost heave potential. In these areas, we would anticipate the potential for periodically high subsurface moisture conditions and frost heave potential. These areas lie along minor drainages located in the western portion of the site. These areas lie within a no build/drainage area and will be avoided. Water was not observed in any of the drainages at the time of our site investigation. Subsurface perimeter drains are recommended should structures with any useable below grade spaces. Typical drain details are presented in Figure 8. If shallow groundwater is encountered, underslab drains or interceptor drains may be necessary Figures 9 and 10. Specific drainage details and recommendations should be made once building locations and plans are finalized.

In summary, the granular soils and sandstone will likely provide good support for shallow foundations. The geologic conditions encountered on site can be mitigated with avoidance or proper engineering and construction practices.

ECONOMIC MINERAL RESOURCES

Some of the sandy materials on-site could be considered a low-grade sand resource. According to the *El Paso County Aggregate Resource Evaluation Map* (Reference 9), of the area of the site is not mapped with any potential aggregate resources. According to the *Atlas of Sand, Gravel and Quarry Aggregate Resources, Colorado Front Range Counties* distributed by the Colorado Geological Survey (Reference 10), the site is not mapped with any resources. According to the *Evaluation of Mineral and Mineral Fuel Potential* (Reference 11), the area of the site has been mapped as “little or no potential” for industrial minerals.

According to *the Evaluation of Mineral and Mineral Fuel Potential of El Paso County State Mineral Lands* (Reference 11), the site is mapped within the Denver Basin Coal Region. However, the area of the site has been mapped as “Poor” for coal resources. No active or inactive mines have been mapped in the area of the site. No metallic mineral resources have been mapped on the site (Reference 11).

The site has been mapped as “Fair” for oil and gas resources (Reference 11). No oil or gas fields have been discovered in the area of the site. The sedimentary rocks in the area may lack the geologic structure for trapping oil or gas; therefore, it may not be considered a significant resource. Hydraulic fracturing is a new method that is being used to extract oil and gas from rocks. It utilizes pressurized fluid to extract oil and gas from rocks that would not normally be productive. The area of the site has not been explored to determine if the rocks underlying the site would be commercially viable utilizing hydraulic fracturing. The practice of hydraulic fracturing has come under review due to concerns about environmental impacts, health and safety.

EROSION CONTROL

The soil types observed on the site are mildly to highly susceptible to wind erosion, and moderately to highly susceptible to water erosion. A minor wind erosion and dust problem may be created for a short time during and immediately after construction. Should the problem be considered severe enough during this time, watering of the cut areas or the use of chemical palliative may be required to control dust. However, once construction has been completed and vegetation re-established, the potential for wind erosion should be considerably reduced.

With regard to water erosion, loosely compacted soils will be the most susceptible to water erosion, residually weathered soils and weathered bedrock materials become increasingly less susceptible to water erosion. For the typical soils observed on site, allowable velocities or unvegetated and unlined earth channels would be on the order of 3 to 4 feet/second, depending upon the sediment load carried by the water. Permissible velocities may be increased through the use of vegetation to something on the order of 4 to 7 feet/second, depending upon the type of vegetation established. Should the anticipated velocities exceed these values, some form of channel lining material may be required to reduce erosion potential. These might consist of some of the synthetic channel lining materials on the market or conventional riprap. In cases where ditch-lining materials are still insufficient to control erosion, small check dams or sediment traps may be required. The check dams will serve to reduce flow velocities, as well as provide small traps for containing sediment. The determination of the amount, location and placement of ditch linings, check dams and of the special erosion control features should be performed by or in conjunction with the drainage engineer who is more familiar with the flow quantities and velocities.

Cut and fill slope areas will be subjected primarily to sheetwash and rill erosion. Unchecked rill erosion can eventually lead to concentrated flows of water and gully erosion. The best means to combat this type of erosion is, where possible, the adequate re-vegetation of cut and fill slopes. Cut and fill slopes having gradients more than three (3) horizontal to one (1) vertical become increasingly more difficult to revegetate successfully. Therefore, recommendations pertaining to the vegetation of the cut and fill slopes may require input from a qualified landscape architect and/or the Soil Conservation Service.

CLOSURE

It is our opinion that the existing geologic engineering and geologic conditions will impose some minor constraints on development and construction of the site. The majority of these conditions can be avoided by construction. Others can be mitigated through proper engineering design and construction practices. The proposed development and use are consistent with anticipated geologic and engineering geologic conditions.

It should be pointed out that because of the nature of data obtained by random sampling of such variable and non-homogeneous materials as soil and rock, it is important that we be informed of any differences observed between surface and subsurface conditions encountered in construction and those assumed in the body of this report. **Individual investigation for the new building site and septic system will be required prior to construction.** Construction and design personnel should be made familiar with the contents of this report. Reporting such discrepancies to Entech Engineering, Inc. soon after they are discovered would be greatly appreciated and could possibly help avoid construction and development problems.

This report has been prepared for Altitude Adjustment Construction, LLC, for application to the proposed project in accordance with generally accepted geologic soil and engineering practices. No other warranty expressed or implied is made.

We trust that this report has provided you with all the information that you required. Should you require additional information, please do not hesitate to contact Entech Engineering, Inc.

Respectfully Submitted,

ENTECH ENGINEERING, INC.

Logan L. Langford, P.G.
Sr. Geologist

Reviewed by:

COLORADO LICENSED
JOSEPH COLLIN GOODE
23725
PROFESSIONAL ENGINEER

Digitally signed by Joseph C. Goode Jr.
Date: 10/16/24

Joseph C. Goode, Jr., P.E.
President

Encl.

SW/jcg
F:\AA Projects\2024\241486-Altitude Adjustment Const-14060 Black Forest Rd-SGS WWS\09-Reports\241486 SGS.docx

REFERENCES

1. Natural Resource Conservation *Service,* August 24, 2023*. Web Soil Survey.* United States Department Agriculture, http://websoilsurvey.sc.egov.usda.gov/App/HomePage.htm.

2. United States Department of Agriculture Soil Conservation Service. June 1981. *Soil Survey of El Paso County Area, Colorado.*

3. Bryant, Bruce; McGrew, Laura W. and Wobus, Reinhard A. 1981. *Geologic Map of the Denver 1° x 2° Quadrangle, North-Central Colorado*. U.S. Geologic Survey. Map I-1163.

4. Thorson, Jon P., 2003. *Geologic Map of the Black Forest Quadrangle, El Paso County, Colorado*. Colorado Geological Survey. Open-File Report 03-6.

5. Trimble, Donald E. and Machette, Michael N. 1979. *Geologic Map of the Colorado Springs-Castle Rock Area, Front Range Urban Corridor, Colorado*. USGS, Map I-857-F.

6. Federal Emergency Management Agency. December 7, 2018. *Flood Insurance Rate Maps for the City of Colorado Springs, Colorado.* Map Number 08041C0315G.

7. Kirkman, Robert M. and Rogers, William P., 1981. *Earthquake Potential in Colorado Springs, Colorado*. Geologic Survey. Bulletin 43.

8. Colorado Geological Survey. 1991. *Results of the 1987-88 EPA Supported Radon Study in Colorado.* Open-file Report 91-4.

9. El Paso County Planning Development. December 1995. *El Paso County Aggregate Resource Evaluation Maps.*

10. Schwochow, S.D.; Shroba, R.R. and Wicklein, P.C. 1974*. Atlas of Sand, Gravel, and Quarry Aggregate Resources, Colorado Front Range Counties*. Colorado Geological Survey. Special Publication 5-B.

11. Keller, John W.; TerBest, Harry and Garrison, Rachel E. 2003. *Evaluation of Mineral and Mineral Fuel Potential of El Paso County State Mineral Lands Administered by the Colorado State Land Board*. Colorado Geological Survey. Open-File Report 03-07.

FIGURES

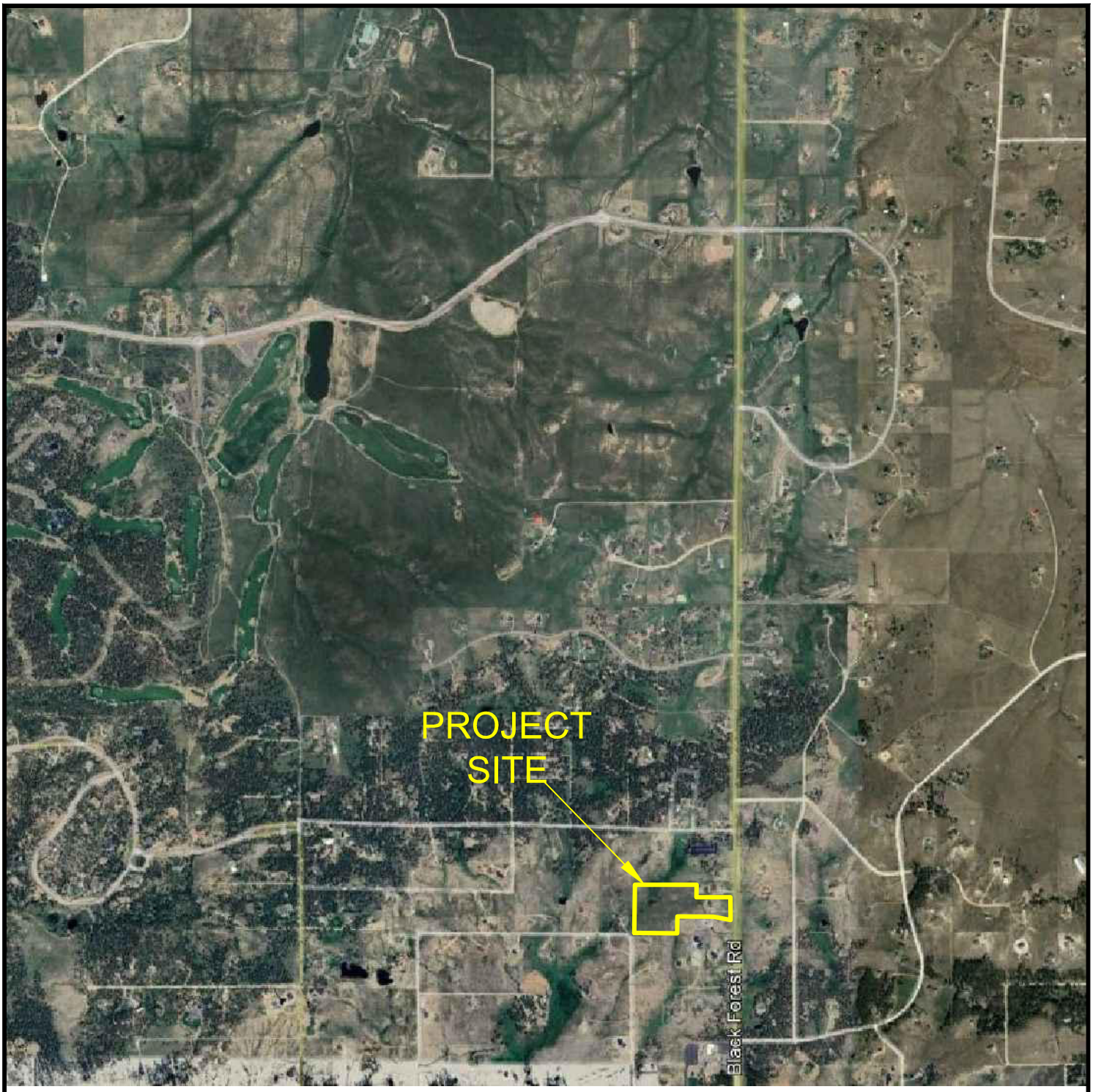

N

ENTECH
ENGINEERING, INC.

VICINITY MAP

14060 BLACK FOREST ROAD
ALTITUDE ADJUSTMENT CONSTRUCTION, LLC

JOB NO.
241486

FIG. 1

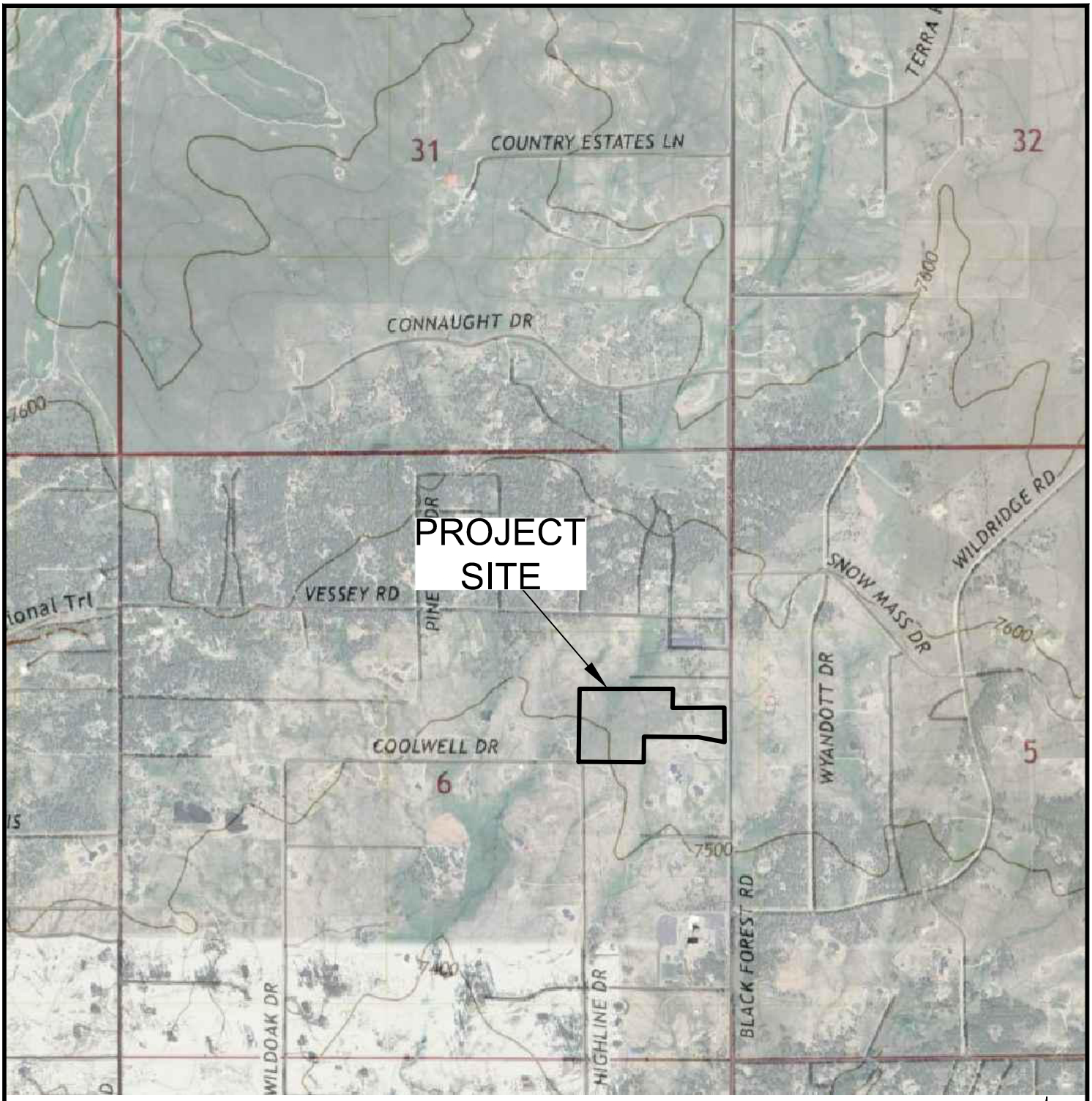

N

ENTECH ENGINEERING, INC.

USGS TOPOGRAPHY MAP

14060 BLACK FOREST ROAD
ALTITUDE ADJUSTMENT CONSTRUCTION, LLC

JOB NO.
241486

FIG. 2

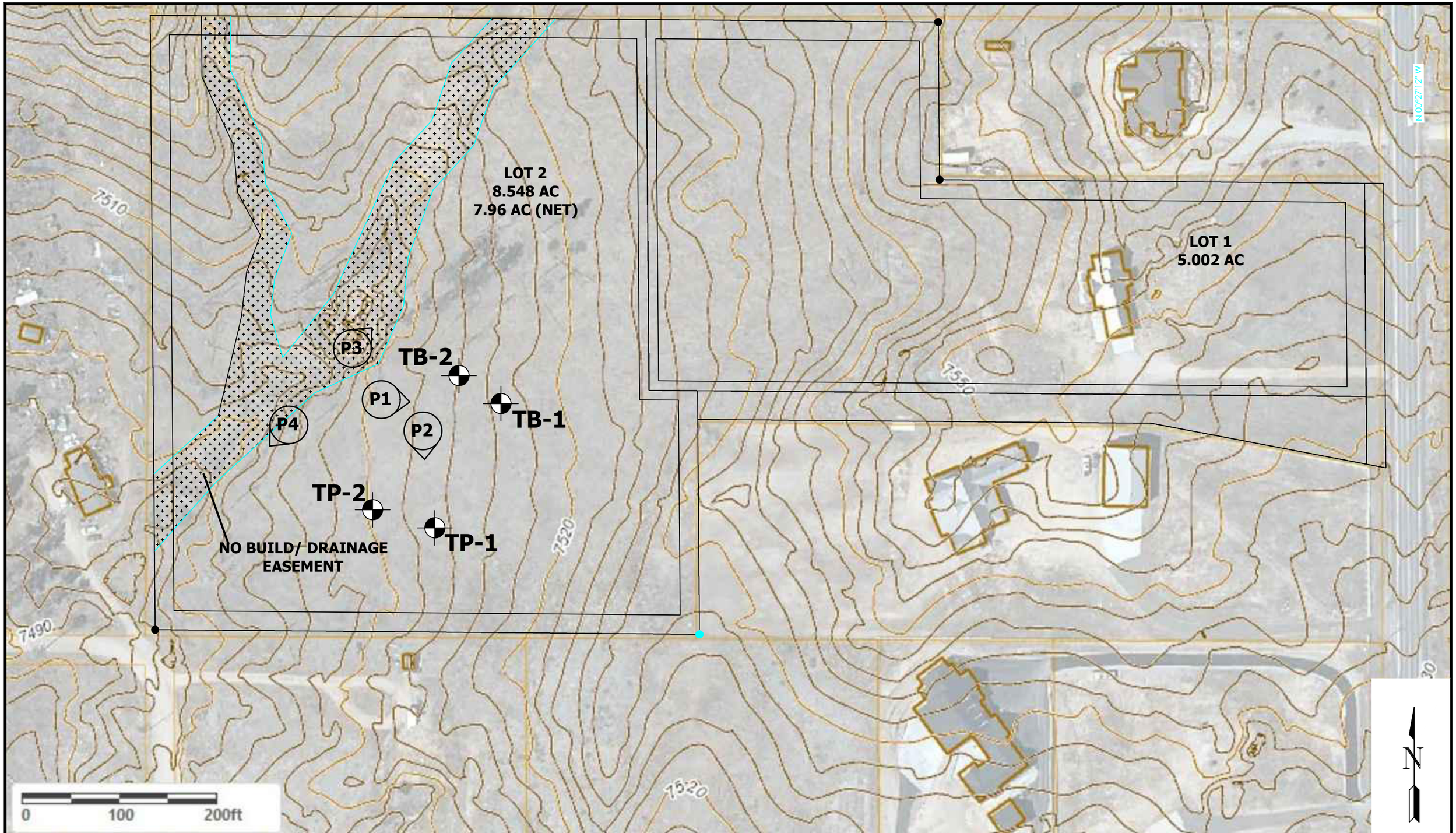

TB- APPROXIMATE TEST BORING LOCATION AND NUMBER

P2 TB- APPROXIMATE TEST BORING LOCATION AND NUMBER

ENTECH ENGINEERING, INC.

SITE AND EXPLORATION PLAN

14060 BLACK FOREST ROAD
ALTITUDE ADJUSTMENT CONSTRUCTION, LLC

JOB NO.
241486

FIG. 3

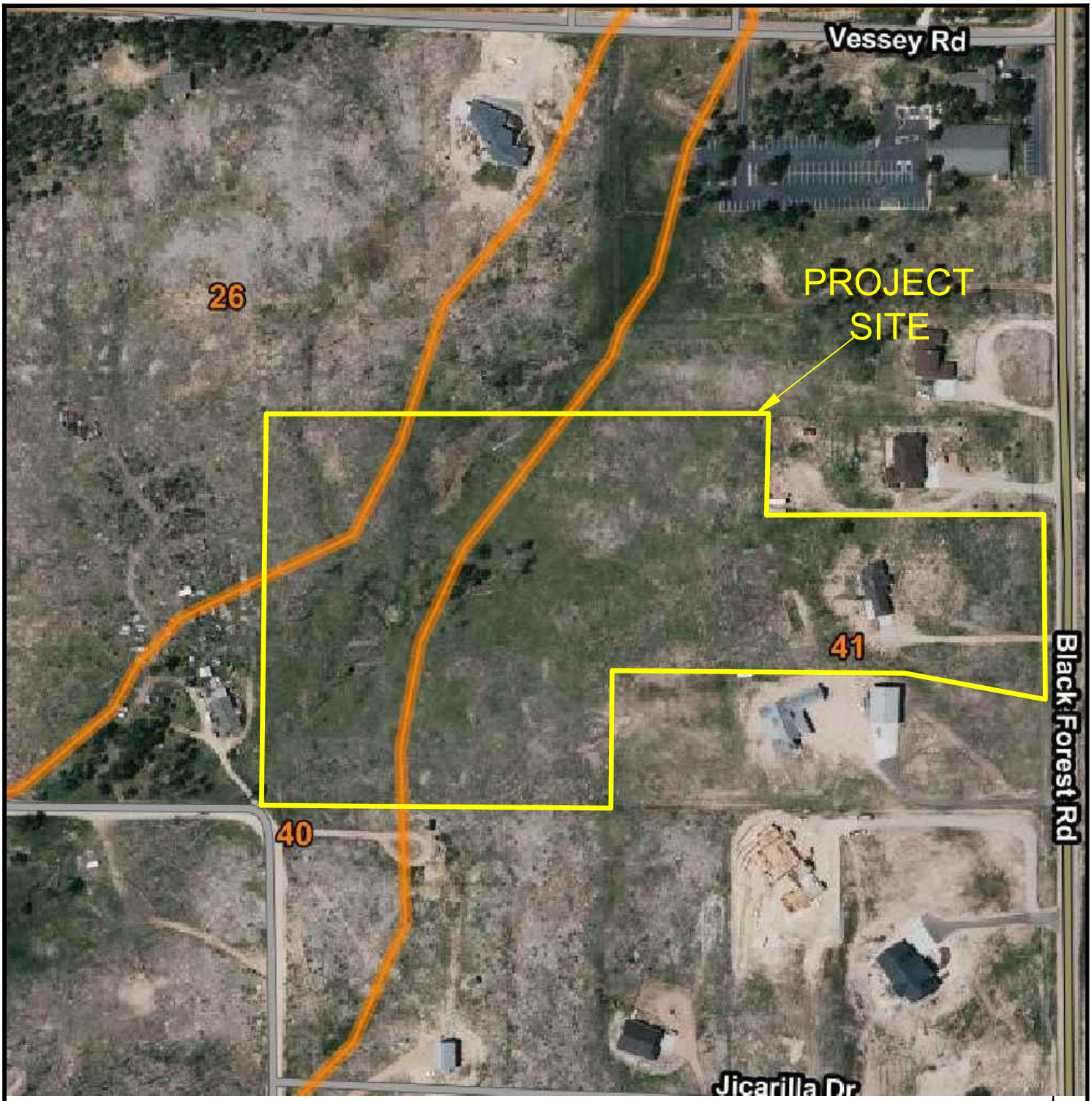

N

ENTECH ENGINEERING, INC.

SOIL SURVEY MAP

14060 BLACK FOREST RAOD
ALTITUDE ADJUSTMENT CONSTRUCTION, LLC

JOB NO.
241486

FIG. 4

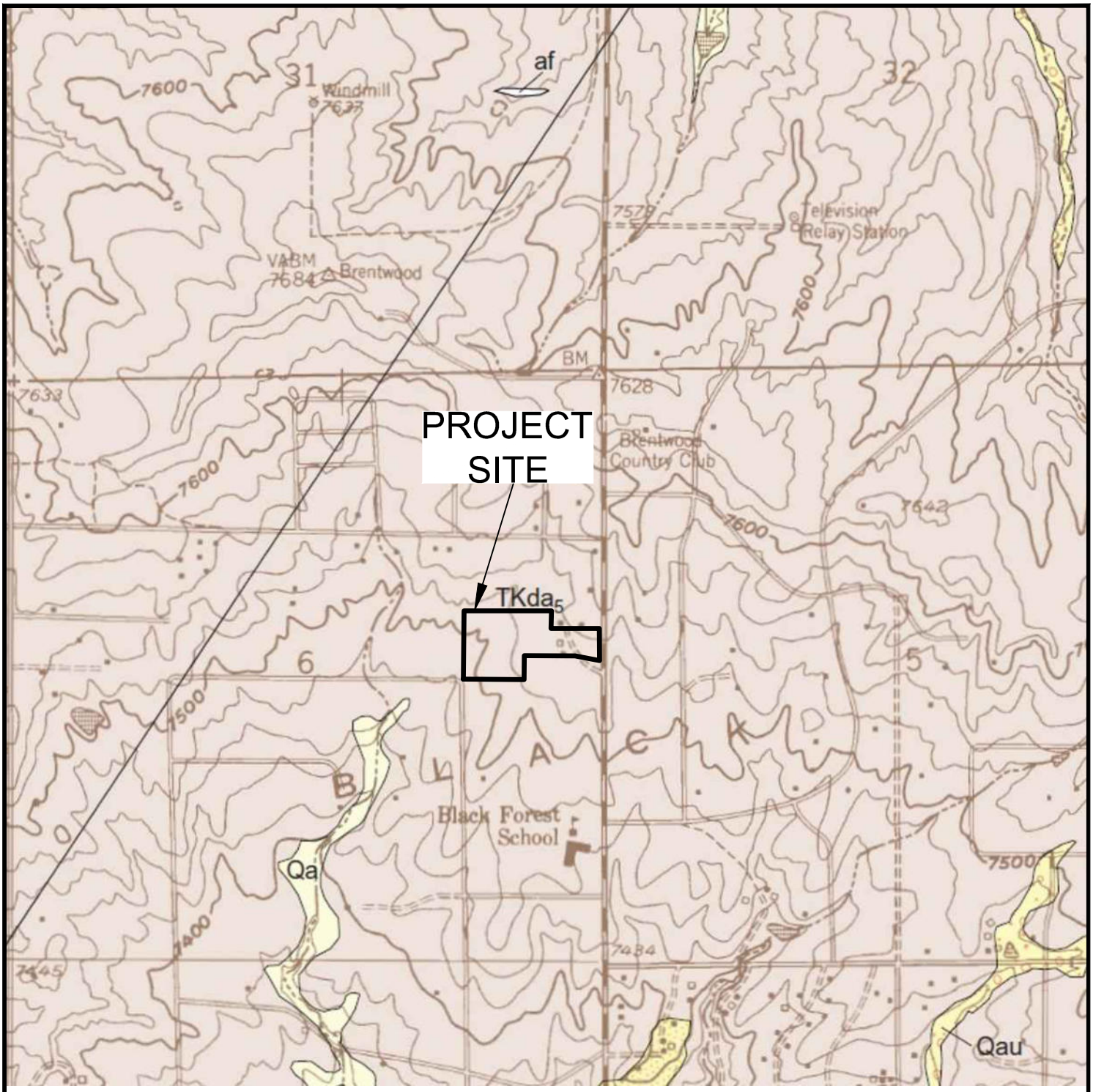

N

ENTECH ENGINEERING, INC.

GEOLOGIC MAP OF THE BLACK FOREST QUADRANGLE

14060 BLACK FOREST ROAD

ALTITUDE ADJUSTMENT CONSTRUCTION, LLC

JOB NO. 241486

FIG. 5

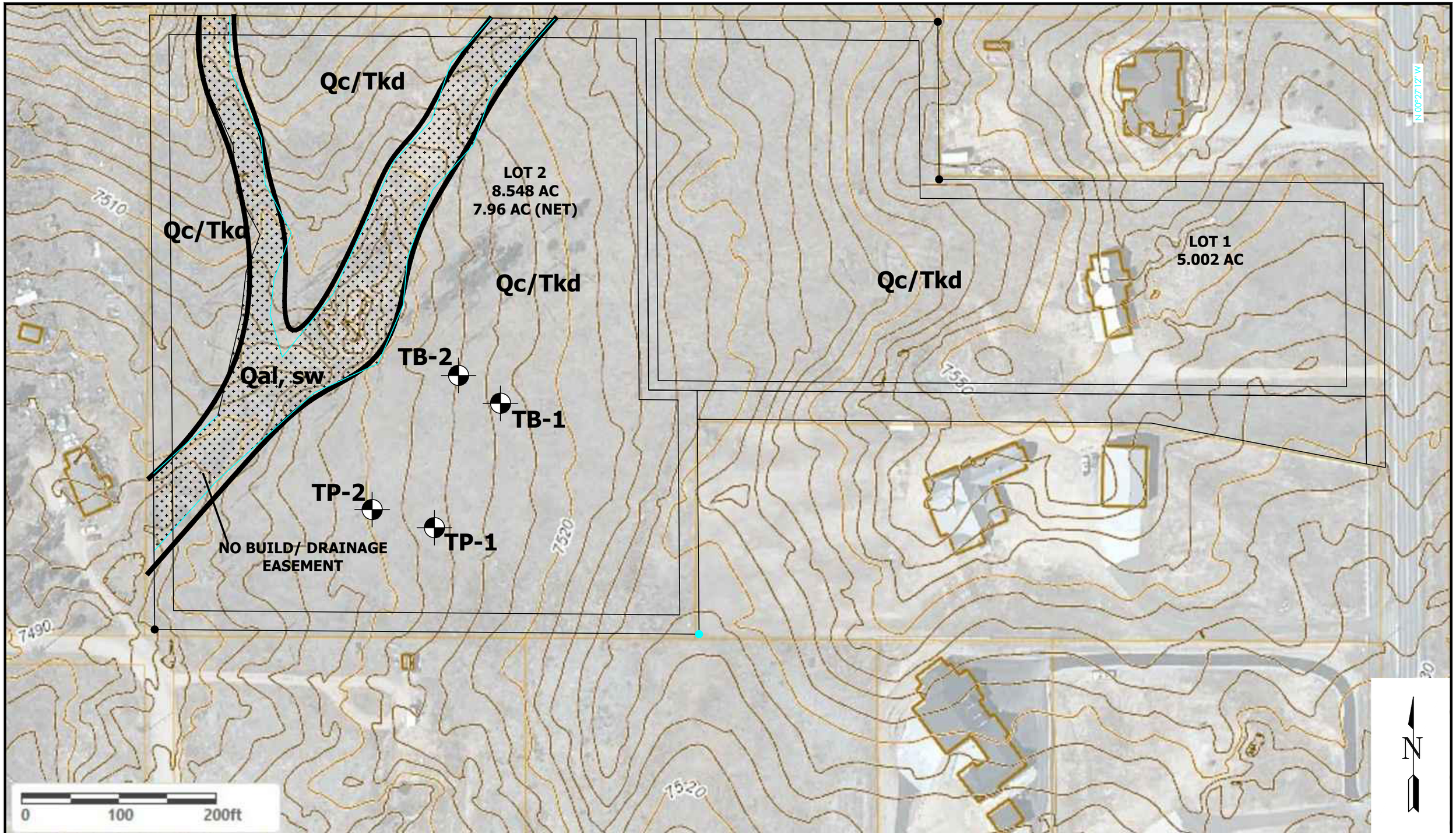

Legend:

Qal - Recent Alluvium of Holocene Age:
water deposited sands and gravel

Qc/Tkd - Colluvium of Quaternary Age overlying the Dawson Formation of Tertiary to Cretaceous Age:
sheetwash and residual soil deposits overlying arkosic sandstone with interbedded claystone and siltstone

sw - seasonally shallow groundwater area

ENTECH ENGINEERING, INC.

GEOLOGY / ENGINEERING MAP

14060 BLACK FOREST ROAD
ALTITUDE ADJUSTMENT CONSTRUCTION, LLC

JOB NO.
241486

FIG. 6

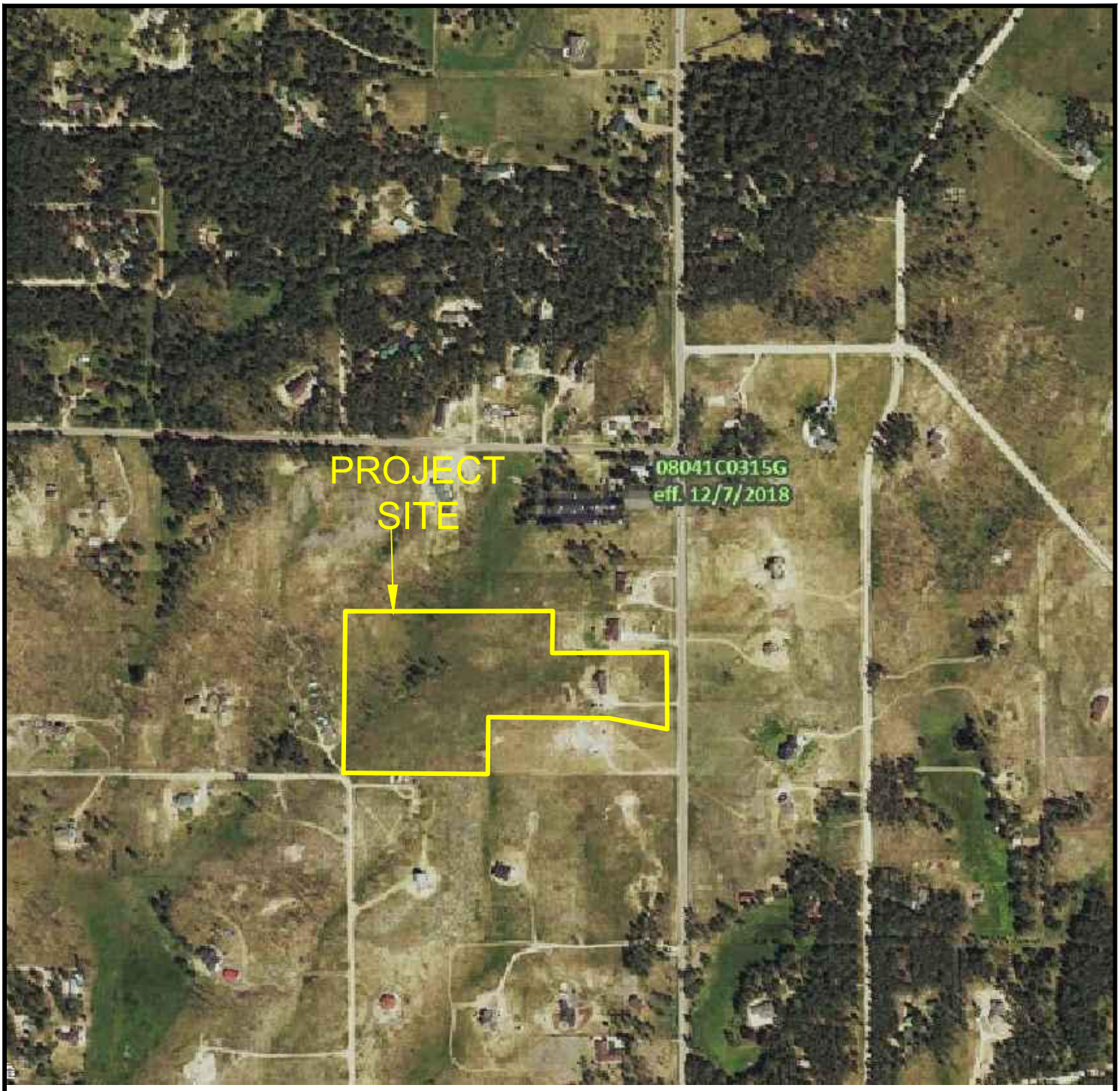

N

ENTECH
ENGINEERING, INC.

FEMA FLOODPLAIN MAP

14060 BLACK FOREST ROAD
ALTITUDE ADJUSTMENT CONSTRUCTION, LLC

JOB NO.
241486

FIG. 7

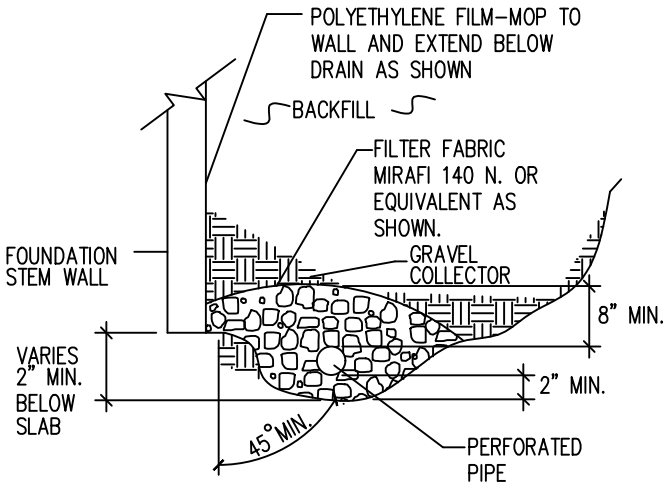

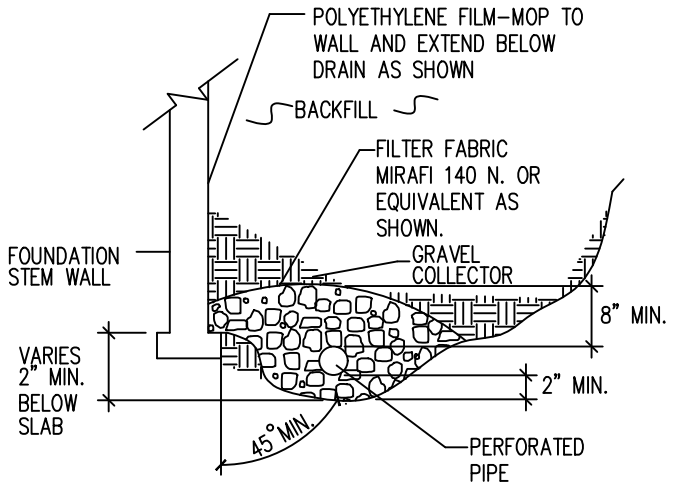

NOTES:

-GRAVEL SIZE IS RELATED TO DIAMETER OF PIPE PERFORATIONS-85% GRAVEL GREATER THAN 2x PERFORATION DIAMETER.

-PIPE DIAMETER DEPENDS UPON EXPECTED SEEPAGE. 4-INCH DIAMETER IS MOST OFTEN USED.

-ALL PIPE SHALL BE PERFORATED PLASTIC. THE DISCHARGE PORTION OF THE PIPE SHOULD BE NON-PERFORATED PIPE.

-FLEXIBLE PIPE MAY BE USED UP TO 8 FEET IN DEPTH, IF SUCH PIPE IS DESIGNED TO WITHSTAND THE PRESSURES. RIGID PLASTIC PIPE WOULD OTHERWISE BE REQUIRED.

-MINIMUM GRADE FOR DRAIN PIPE TO BE 1% OR 3 INCHES OF FALL IN 25 FEET.

-DRAIN TO BE PROVIDED WITH A FREE GRAVITY OUTFALL, IF POSSIBLE. A SUMP AND PUMP MAY BE USED IF GRAVITY OUT FALL IS NOT AVAILABLE.

ENTECH ENGINEERING, INC.

PERIMETER DRAIN DETAIL

14060 BLACK FOREST ROAD
ALTITUDE ADJUSTMENT CONSTRUCTION, LLC

JOB NO. 241486

FIG. 8

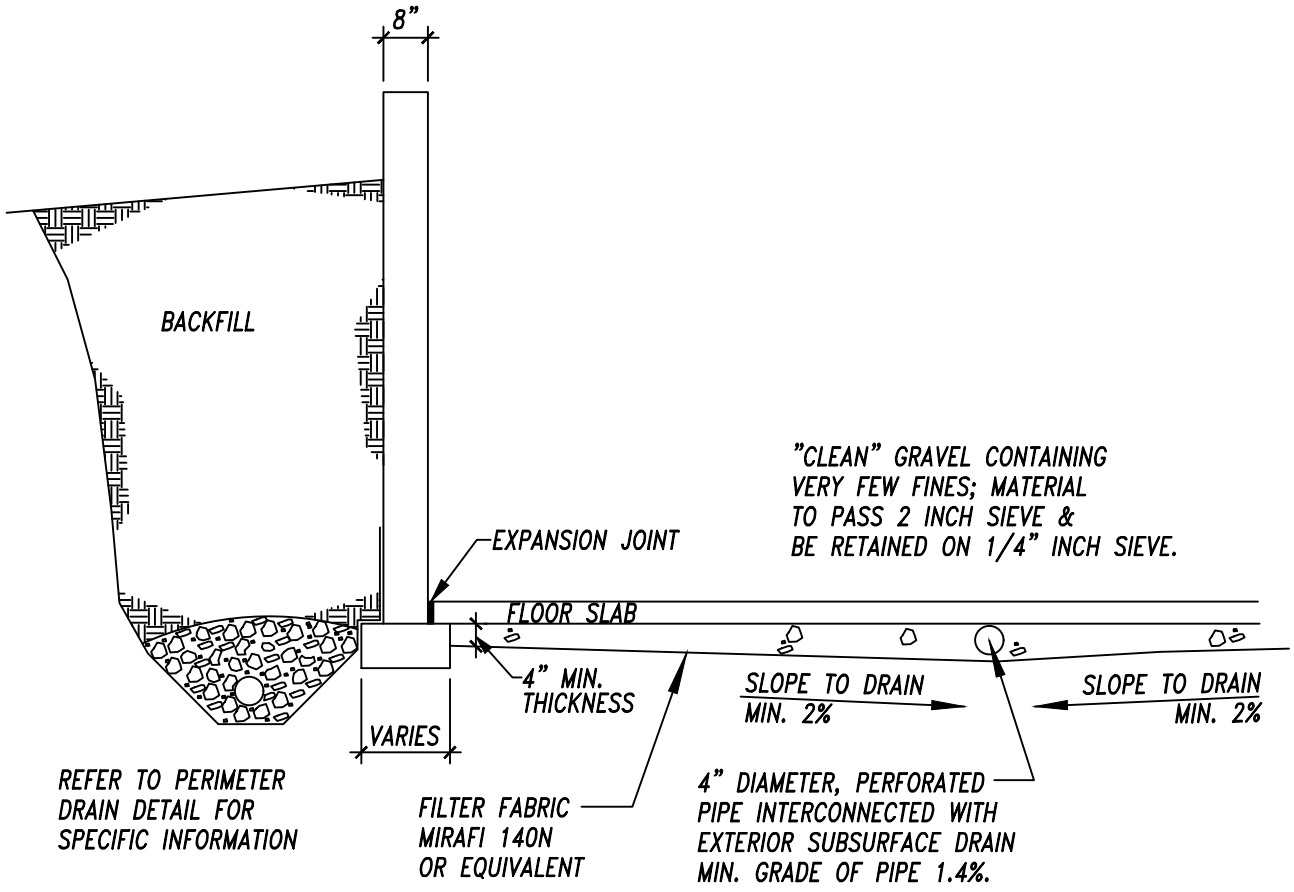

ENTECH ENGINEERING, INC.

TYP. UNDERSLAB DRAINAGE LAYER (CAPILLARY BREAK)

14060 BLACK FOREST ROAD

ALTITUDE ADJUSTMENT CONSTRUCTION, LLC

JOB NO. 241486

FIG. 9

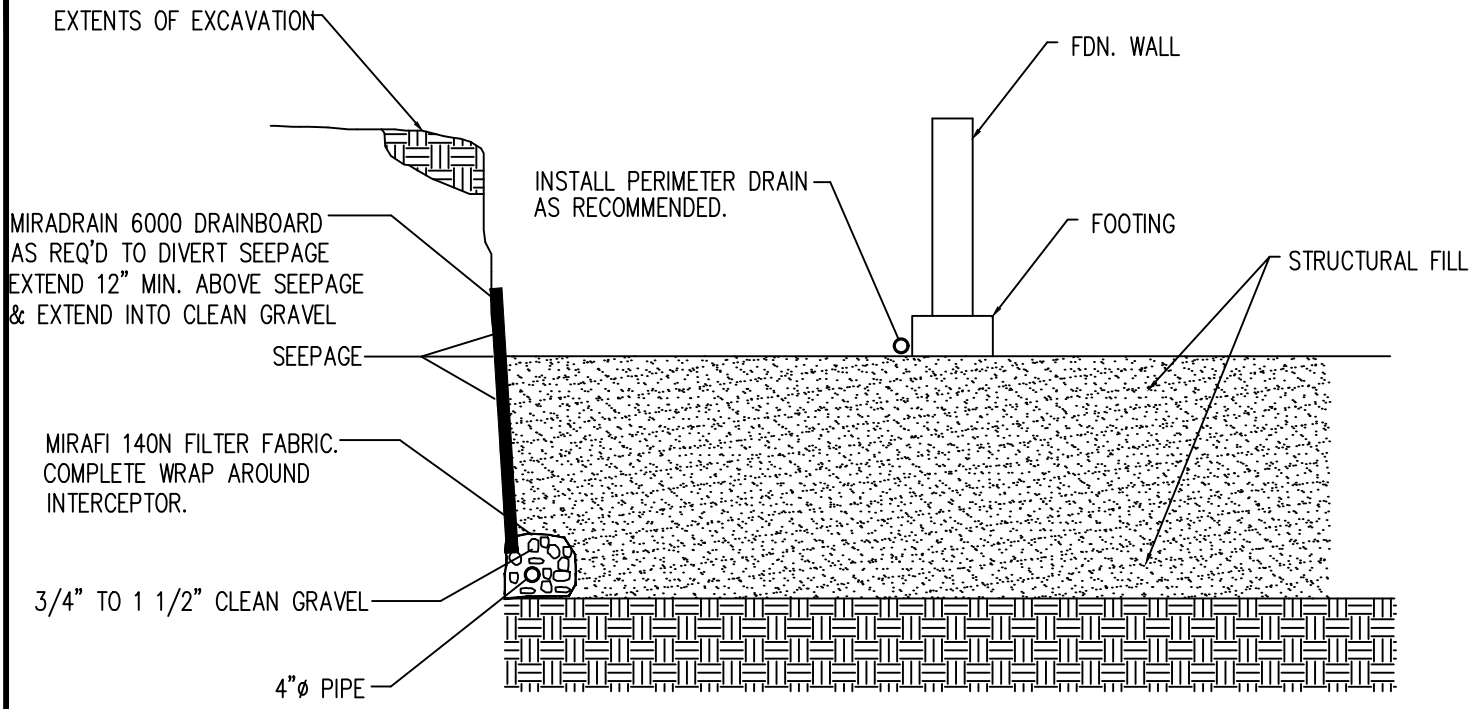

NOTE:
EXTEND INTERCEPTOR DRAIN TO UNDERDRAIN OR TO SUMP.
BENCH DRAIN INTO NATIVE SOILS 12 INCHES MINIMUM.

INTERCEPTOR DRAIN DETAIL

N.T.S.

ENTECH ENGINEERING, INC.

INTERCEPTOR DRAIN DETAIL

14060 BLACK FOREST ROAD
ALTITUDE ADJUSTMENT CONSTRUCTION, LLC

JOB NO.
241486

FIG. 10

APPENDIX A: Site Photographs

1

Looking east from the western portion of Lot 2.

September 12, 2024

2

Looking south the central portion of Lot No. 2.

September 12, 2024

Job No. 241486

3

Looking northeast along drainage easement in the western portion of the site.

September 12, 2024

4

Looking southwest from the drainage easement in the western portion of the site.

September 12, 2024

Job No. 241486

APPENDIX B: Test Boring and Test Pit Logs

TABLE B-1

DEPTH TO BEDROCK & GROUNDWATER

TEST BORING	DEPTH TO BEDROCK (ft.)	DEPTH TO GROUNDWATER (ft.)
1	8	>20
2	8	>15

TEST BORING 1
DATE DRILLED 9/10/2024

REMARKS	Depth (ft)	Symbol	Samples	Blows per foot	Watercontent %	Soil Type
DRY TO 20', 9/12/24						
SAND, SILTY, LIGHT BROWN, MEDIUM DENSE, MOIST				10	7.2	1
	5			13	4.0	1
SANDSTONE, EXTREMELY WEAK, TAN, SLIGHTLY WEATHERED (SAND, SILTY, VERY DENSE, MOIST)	10			50	8.7	2
	15			50/5"	6.6	2
	20			50/9"	10.6	2

TEST BORING 2
DATE DRILLED 9/10/2024

REMARKS	Depth (ft)	Symbol	Samples	Blows per foot	Watercontent %	Soil Type
DRY TO 15', 9/12/24						
SAND, SILTY, LIGHT BROWN, LOOSE to DENSE, MOIST				9	4.8	
	5			40	8.4	
SANDSTONE, EXTREMELY WEAK, TAN, SLIGHTLY WEATHERED (SAND, SILTY, VERY DENSE, MOIST)	10			50/6"	7.5	
	15			50/6"	8.7	
	20					

ENTECH ENGINEERING, INC.

TEST BORING LOGS

14060 BLACK FOREST ROAD
ALTITUDE ADJUSTMENT, LLC

JOB NO. 241186

FIG. B-1

TEST PIT 1
DATE EXCAVATED 8/29/2024

REMARKS	Depth (ft.)	Symbol	Samples	Soil Structure Shape	Soil Structure Grade	Soil Type
topsoil, sandy clay loam (scl), brown, moist	1					
sandy clay, fine to medium grained, light brown, moist	2			bl	m	4
	3					
sandy clay, fine to medium grained, grayish brown, moist	4			ma	sl	4A
*refusal at 4ft due to sandstone	5					
	6					
	7					
	8					
	9					
	10					

TEST PIT 2
DATE EXCAVATED 8/29/2024

REMARKS	Depth (ft.)	Symbol	Samples	Soil Structure Shape	Soil Structure Grade	Soil Type
topsoil, scl, brown, moist						
sandy clay, fine to medium grained, gray brown, moist	1			ma	sl	4A
sandy clay, fine to medium grained, brown, moist	2			bl	s	4
	3					
sandy clay loam, fine to medium grained, reddish brown, moist	4			gr	s	3
*refusal at 4ft due to sandstone	5					
	6					
	7					
	8					
	9					
	10					

<u>Soil Structure Shape</u>
granular - gr
platy - pl
blocky - bl
prismatic - pr
single grain - sg
massive - ma

<u>Soil Structure Grade</u>
weak - w
moderate - m
strong - s
loose - l
structureless - sl

ENTECH ENGINEERING, INC.

TEST PIT LOGS

14060 BLACK FOREST ROAD
ADTITUDE ADJUSTMENT CONST.

JOB NO.
241486

FIG. B-2

APPENDIX C: Laboratory Testing Results

TABLE C-1
SUMMARY OF LABORATORY TEST RESULTS

SOIL TYPE	TEST BORING NO.	DEPTH (FT)	PASSING NO. 200 SIEVE (%)	LIQUID LIMIT	PLASTIC LIMIT	PLASTIC INDEX	USCS	SOIL DESCRIPTION
1	1	2-3	20.4	NV	NP	NP	SM	SAND, SILTY
2	2	10	16.4	NV	NP	NP	SM	SANDSTONE (SAND, SILTY)

Project: 14060 Black Forest Road
Client: Altitude Adjustment Construction, LLC
Job No: 241486

TEST BORING	1	SOIL DESCRIPTION	SAND, SILTY
DEPTH (FT)	2-3	SOIL TYPE	1

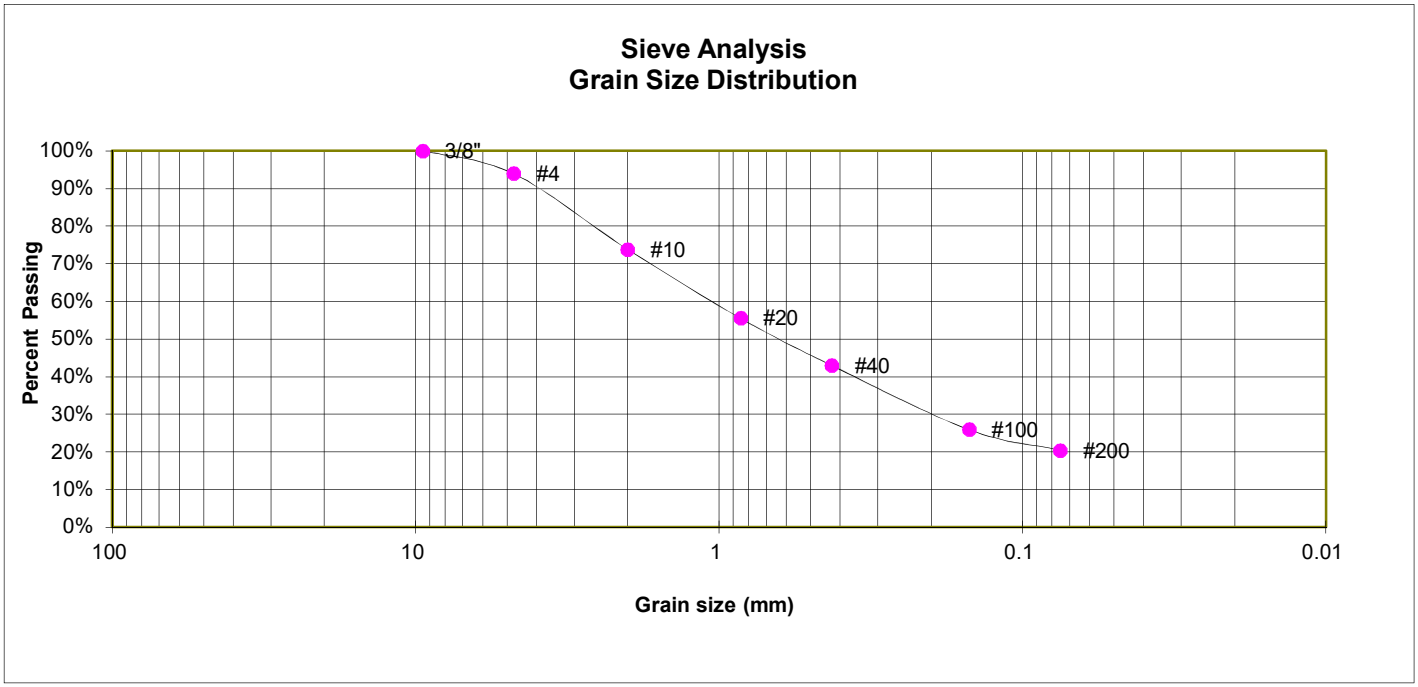

GRAIN SIZE ANALYSIS

U.S. Sieve #	Percent Finer
3"	
1 1/2"	
3/4"	
1/2"	
3/8"	100.0%
4	94.0%
10	73.8%
20	55.5%
40	43.0%
100	25.9%
200	20.4%

ATTERBERG LIMITS

Plastic Limit	NP
Liquid Limit	NV
Plastic Index	NP

SOIL CLASSIFICATION

USCS CLASSIFICATION: SM

ENTECH ENGINEERING, INC.

LABORATORY TEST RESULTS

14060 BLACK FOREST ROAD
ALTITUDE ADJUSTMENT, LLC

JOB NO.
241186

FIG. C-1

TEST BORING	2	SOIL DESCRIPTION	SANDSTONE (SAND, SILTY)
DEPTH (FT)	10	SOIL TYPE	2

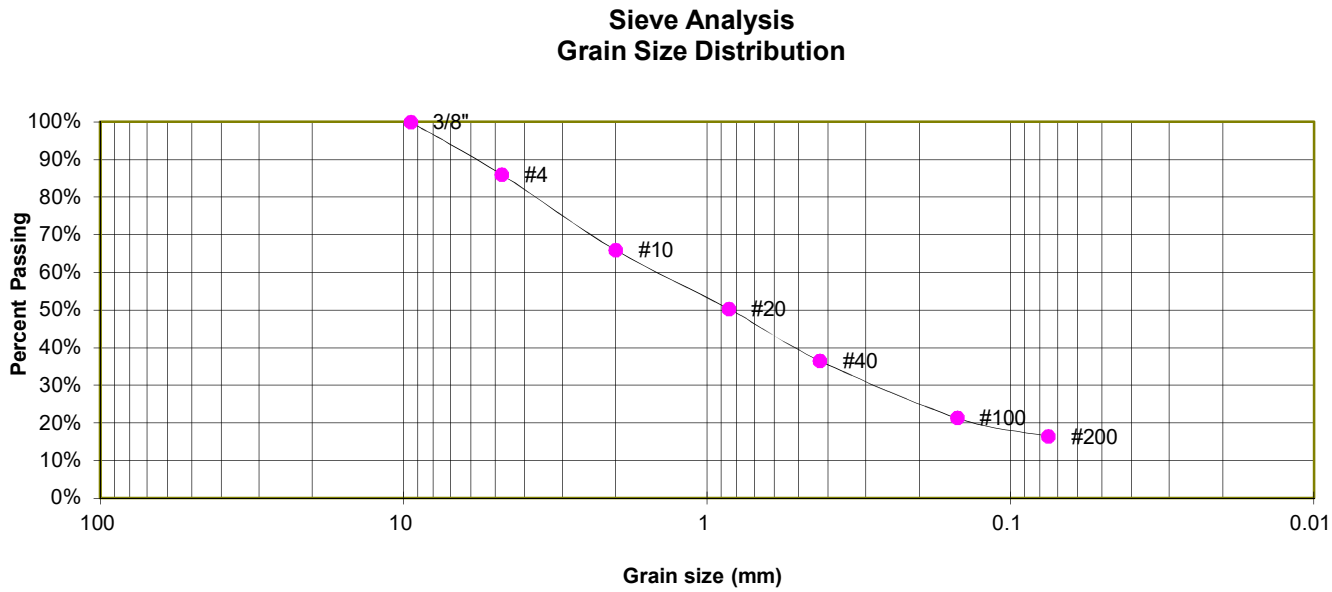

GRAIN SIZE ANALYSIS

U.S. Sieve #	Percent Finer
3"	
1 1/2"	
3/4"	
1/2"	
3/8"	100.0%
4	86.0%
10	65.9%
20	50.4%
40	36.5%
100	21.3%
200	16.4%

ATTERBERG LIMITS

Plastic Limit	NP
Liquid Limit	NV
Plastic Index	NP

SOIL CLASSIFICATION

USCS CLASSIFICATION: SM

ENTECH ENGINEERING, INC.

LABORATORY TEST RESULTS

14060 BLACK FOREST ROAD
ALTITUDE ADJUSTMENT, LLC

JOB NO.
241186

FIG. C-2

TEST BORING	TP-1	SOIL DESCRIPTION	SAND, CLAYEY
DEPTH (FT)	3.5		

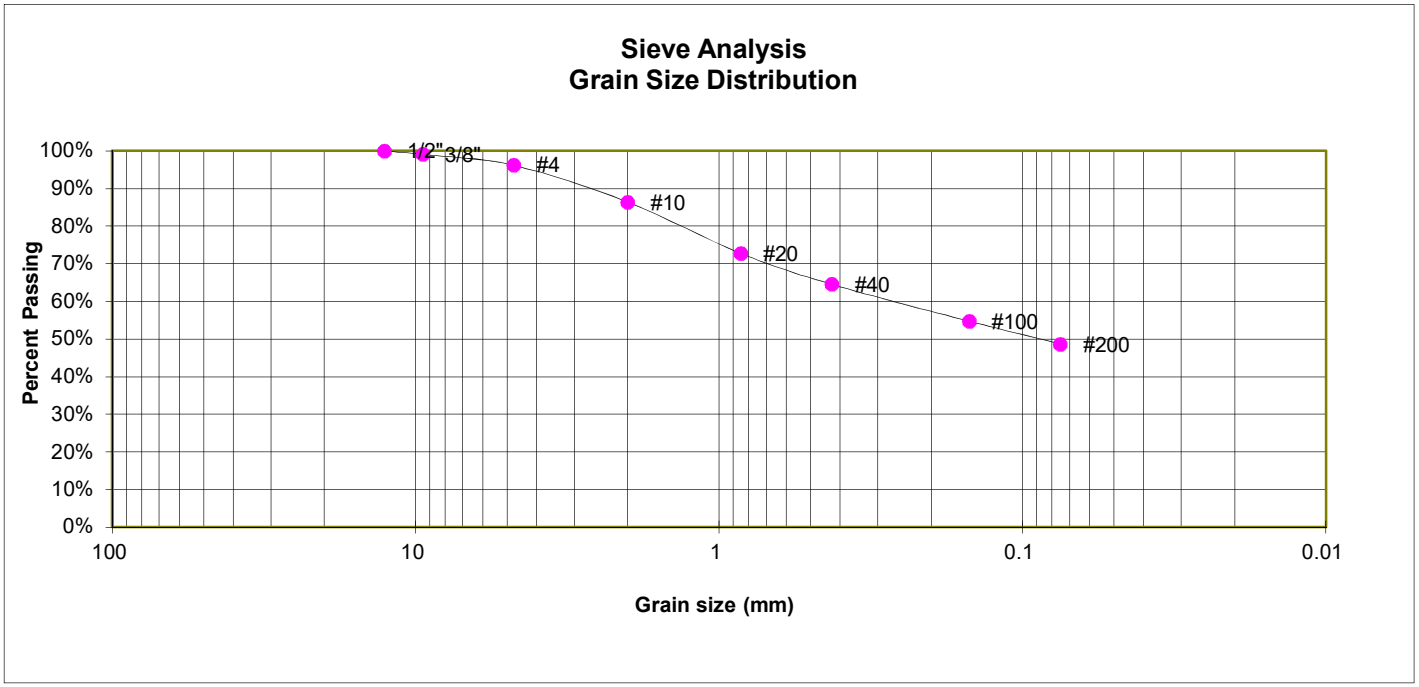

GRAIN SIZE ANALYSIS

U.S. Sieve #	Percent Finer
3"	
1 1/2"	
3/4"	
1/2"	100.0%
3/8"	99.1%
4	96.2%
10	86.4%
20	72.8%
40	64.6%
100	54.7%
200	48.7%

SOIL CLASSIFICATION

USCS CLASSIFICATION: SC

ENTECH ENGINEERING, INC.

LABORATORY TEST RESULTS

14060 BLACK FOREST ROAD
ALTITUDE ADJUSTMENT, LLC

JOB NO.
241186

FIG. C-3

TEST BORING	TP-2	SOIL DESCRIPTION	SAND, CLAYEY
DEPTH (FT)	4		

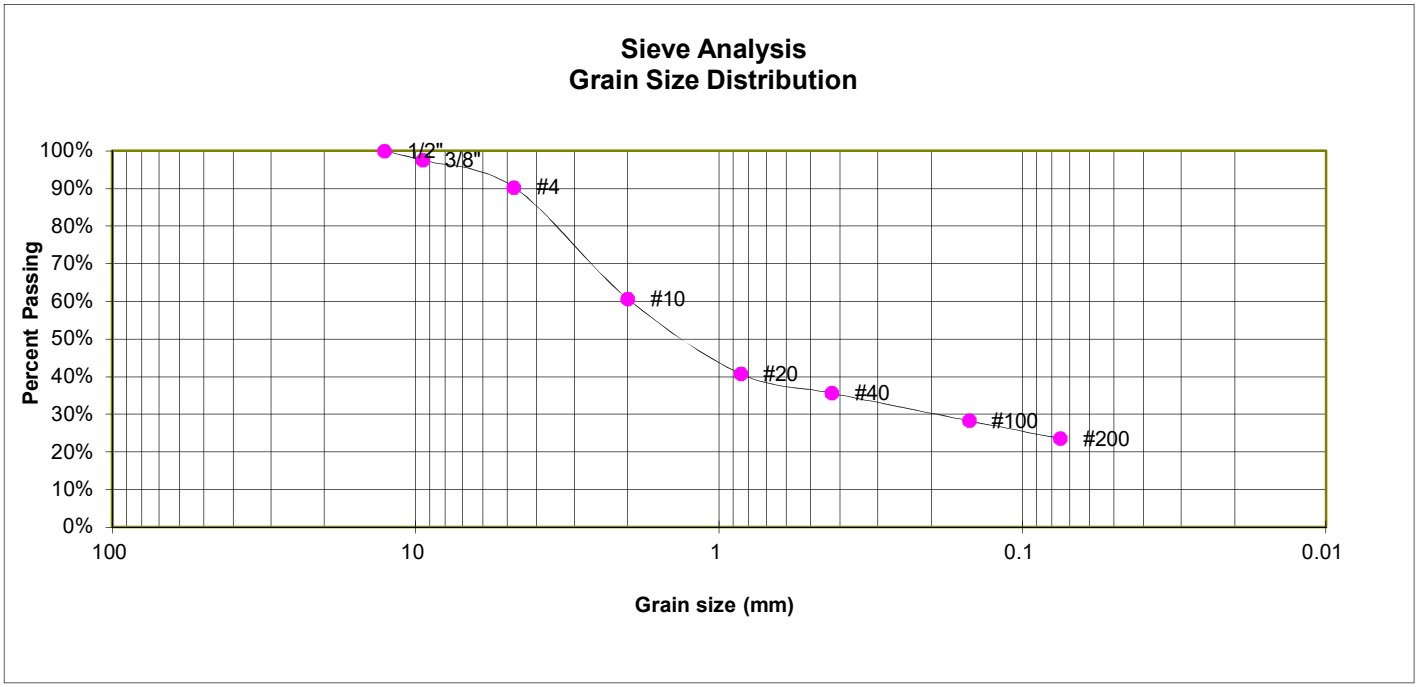

GRAIN SIZE ANALYSIS

U.S. Sieve #	Percent Finer
3"	
1 1/2"	
3/4"	
1/2"	100.0%
3/8"	97.5%
4	90.4%
10	60.7%
20	40.8%
40	35.6%
100	28.3%
200	23.5%

SOIL CLASSIFICATION

USCS CLASSIFICATION: SC

ENTECH ENGINEERING, INC.

LABORATORY TEST RESULTS

14060 BLACK FOREST ROAD
ALTITUDE ADJUSTMENT, LLC

JOB NO.
241186

FIG. C-4

APPENDIX D: Soil Survey Descriptions

El Paso County Area, Colorado

26—Elbeth sandy loam, 8 to 15 percent slopes

Map Unit Setting

National map unit symbol: 367y
Elevation: 7,300 to 7,600 feet
Farmland classification: Not prime farmland

Map Unit Composition

Elbeth and similar soils: 85 percent
Minor components: 5 percent
Estimates are based on observations, descriptions, and transects of the mapunit.

Description of Elbeth

Setting

Landform: Hills
Landform position (three-dimensional): Side slope
Down-slope shape: Linear
Across-slope shape: Linear
Parent material: Alluvium derived from arkose

Typical profile

A - 0 to 3 inches: sandy loam
E - 3 to 23 inches: loamy sand
Bt - 23 to 68 inches: sandy clay loam
C - 68 to 74 inches: sandy clay loam

Properties and qualities

Slope: 8 to 15 percent
Depth to restrictive feature: More than 80 inches
Drainage class: Well drained
Runoff class: Medium
Capacity of the most limiting layer to transmit water (Ksat): Moderately high (0.20 to 0.60 in/hr)
Depth to water table: More than 80 inches
Frequency of flooding: None
Frequency of ponding: None
Available water supply, 0 to 60 inches: Moderate (about 7.1 inches)

Interpretive groups

Land capability classification (irrigated): None specified
Land capability classification (nonirrigated): 4e
Hydrologic Soil Group: B
Ecological site: F048AY908CO - Mixed Conifer
Hydric soil rating: No

Minor Components

Pleasant

Percent of map unit: 5 percent
Landform: Depressions
Hydric soil rating: Yes

Other soils

Percent of map unit:
Hydric soil rating: No

Data Source Information

Soil Survey Area: El Paso County Area, Colorado
Survey Area Data: Version 22, Sep 3, 2024

El Paso County Area, Colorado

40—Kettle gravelly loamy sand, 3 to 8 percent slopes

Map Unit Setting

National map unit symbol: 368g
Elevation: 7,000 to 7,700 feet
Farmland classification: Not prime farmland

Map Unit Composition

Kettle and similar soils: 85 percent
Minor components: 5 percent
Estimates are based on observations, descriptions, and transects of the mapunit.

Description of Kettle

Setting

Landform: Hills
Landform position (three-dimensional): Side slope
Down-slope shape: Linear
Across-slope shape: Linear
Parent material: Sandy alluvium derived from arkose

Typical profile

E - 0 to 16 inches: gravelly loamy sand
Bt - 16 to 40 inches: gravelly sandy loam
C - 40 to 60 inches: extremely gravelly loamy sand

Properties and qualities

Slope: 3 to 8 percent
Depth to restrictive feature: More than 80 inches
Drainage class: Somewhat excessively drained
Runoff class: Low
Capacity of the most limiting layer to transmit water (Ksat): High (2.00 to 6.00 in/hr)
Depth to water table: More than 80 inches
Frequency of flooding: None
Frequency of ponding: None
Available water supply, 0 to 60 inches: Low (about 3.4 inches)

Interpretive groups

Land capability classification (irrigated): None specified
Land capability classification (nonirrigated): 4e
Hydrologic Soil Group: B
Ecological site: F048AY908CO - Mixed Conifer
Hydric soil rating: No

Minor Components

Pleasant

Percent of map unit: 5 percent
Landform: Depressions

Hydric soil rating: Yes

Other soils

Percent of map unit:
Hydric soil rating: No

Data Source Information

Soil Survey Area: El Paso County Area, Colorado
Survey Area Data: Version 22, Sep 3, 2024

El Paso County Area, Colorado

41—Kettle gravelly loamy sand, 8 to 40 percent slopes

Map Unit Setting

National map unit symbol: 368h
Elevation: 7,000 to 7,700 feet
Farmland classification: Not prime farmland

Map Unit Composition

Kettle and similar soils: 85 percent
Minor components: 5 percent
Estimates are based on observations, descriptions, and transects of the mapunit.

Description of Kettle

Setting

Landform: Hills
Landform position (three-dimensional): Side slope
Down-slope shape: Linear
Across-slope shape: Linear
Parent material: Sandy alluvium derived from arkose

Typical profile

E - 0 to 16 inches: gravelly loamy sand
Bt - 16 to 40 inches: gravelly sandy loam
C - 40 to 60 inches: extremely gravelly loamy sand

Properties and qualities

Slope: 8 to 40 percent
Depth to restrictive feature: More than 80 inches
Drainage class: Somewhat excessively drained
Runoff class: Medium
Capacity of the most limiting layer to transmit water (Ksat): High (2.00 to 6.00 in/hr)
Depth to water table: More than 80 inches
Frequency of flooding: None
Frequency of ponding: None
Available water supply, 0 to 60 inches: Low (about 3.4 inches)

Interpretive groups

Land capability classification (irrigated): None specified
Land capability classification (nonirrigated): 7e
Hydrologic Soil Group: B
Ecological site: F048AY908CO - Mixed Conifer
Hydric soil rating: No

Minor Components

Pleasant

Percent of map unit: 5 percent
Landform: Depressions

Hydric soil rating: Yes

Other soils

Percent of map unit:

Hydric soil rating: No

Data Source Information

Soil Survey Area: El Paso County Area, Colorado

Survey Area Data: Version 22, Sep 3, 2024

APPENDIX E: El Paso County Public Health Department, OWTS Records

El Paso County, CO
Public Health
Prevent • Promote • Protect

Environmental Health Division
1675 W. Garden of the Gods Rd., Suite 2044
Colorado Springs, CO 80907
(719) 578-3199 *phone*
(719) 575-8664 *fax*
www.elpasocountyhealth.org

ON-SITE WASTEWATER TREATMENT SYSTEM INSPECTION FORM

PERMIT # ON0021115 {P}

APN # 5206000063

DATE: April 21, 2014

APPROVED YES X NO ☐ Environmental Health Specialist: Neil Mayes

Address: 14060 Black Forest Rd Colorado Springs CO 80908 Owner: Sharon Bowen

Residence: X #Bedrooms: 3 Commercial: Enter System Installer: M & M Construction

SEPTIC TANK: Construction Material Precast Concrete Capacity Gallon 1250

DISPOSAL FIELD:

Trench: Depth (Range): ___ Width: ___ Total Length: ___ Sq. Ft.: ___

Bed: Depth (Range): ___ Width: ___ Total Length: ___ Sq. Ft.: ___

Depth of Rock: ___ Under PVC: ___ Type of cover on Rock: ___

DRYWELLS: # of Pits: ___ Rings(Pit 1): ___ Rings(Pit2): ___ Working Depth #1: ___ #2: ___

Size (L x W) #1 ___ #2 ___ Total Sq. Ft. ___

ROCKLESS SYSTEMS:

Standard Chamber: Type: Quick 4+ STD #Chambers: 73 Sq. Ft./Chamber: 11.55 Bed: ☐ Trench: X

Reduction Allowed%: 40 Sq. Ft. Required: 990 Depth (Range): 24" – 36"

Sq. Ft. Installed: 843.15 Equivalent Sq. Ft. Installed with Reduction: 1405.25

Engineer Design: Y ☐ **N** X Engineering Firm: ___ **Approval Letter Provided: Y** ☐ **N** ☐

Well installed at time of septic inspection: Y X N ☐ **Public Water: Y X N** ☐

**Approval will be revoked if in the future the well is found to be within 50 feet of the septic tank and/or 100 feet of the disposal field.*

Notes:

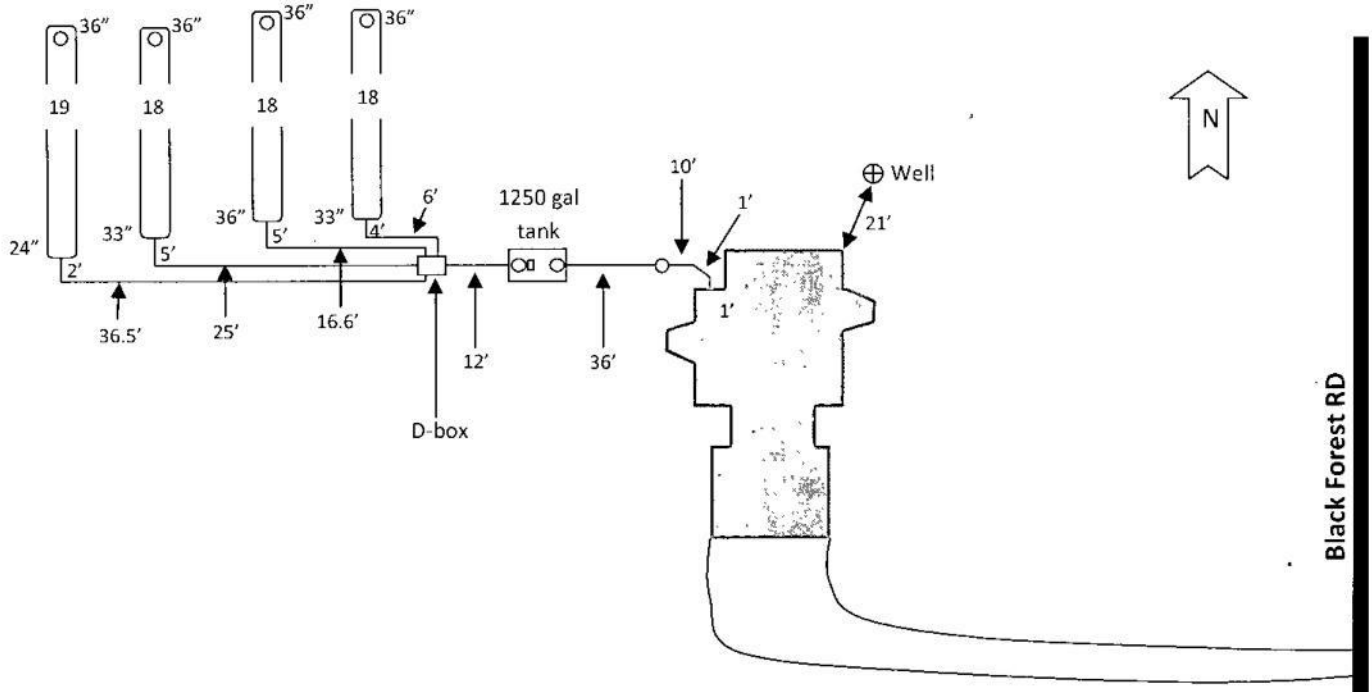

77 710

El Paso County, CO
Public Health

Prevent • Promote • Protect

SR0001046
AR0005071

Environmental Health Division

1675 W. Garden of the Gods Rd., Suite 2044
Colorado Springs, CO 80907
(719) 578-3199 *phone*
(719) 578-3188 *fax*
www.elpasocountyhealth.org

Ck

Larry Emerson
590-4744

APPLICATION FOR AN ON-SITE WASTEWATER TREATMENT SYSTEM PERMIT

☐ NEW PERMIT ☒ MAJOR REPAIR PERMIT ☐ MINOR REPAIR PERMIT

Owner Sharon Bowen Daytime Phone 719-590-4744
System Installer M+M Const. Daytime Phone
Property Address 14010 Black Forest Rd. City and Zip Black Forest, Colo Spgs
Owners Mailing Address same.
Email Address mountainlarry@yahoo.com Fax # 719-214-5421
Tax Schedule # 5206000063 Lot Size 13 acres 13.4 acres
Site Located Inside City Limits ☐ Yes ☒ No Primary Contact ☐ Owner ☒ Contractor
Proposed Use: ☒ Single Family ☐ Multi-Family ☐ Commercial
Water Supply: ☒ Well ☐ Cistern ☐ Municipal Number of Bedrooms 3
☐ **Pick up:** ☐ **Fax:** ☐ **Email:**

CURRENT FEES AS APPROVED BY THE El PASO COUNTY BOARD OF HEALTH

New Permit: $630.00 (EPCPH Charge) + $147.00 (EPC Planning Dept. Surcharge) + $23.00 (CDPHE Surcharge) = $800.00
Major Repair Permit: $515.00 (EPCPH Charge) + $23.00 (CDPHE Surcharge) = ~~$538.00~~ $517.00
Minor Repair Permit: $230.00 (EPCPH Charge) + $23.00 (CDPHE Surcharge) = $253.00

- **All Payments are due at the time of application submittal; by cash, check or major credit card (Visa / MC)**
- **This permit will expire one year from the date of issuance.**

I certify that the information provided on this application is in compliance with Section 8.3, Chapter 8 of the Onsite Wastewater System (OWS) Regulations of the El Paso County Board of Health. I also authorize the assigned representative of El Paso County Public Health to enter onto this property in order to obtain information necessary for the issuance of a permit.

Applicants Signature: Larry D Emerson Date: 1-20-14

Site Insp. Date: 1/23/14 Perc. Rate: 21 **Permit #** ON0021115
E.H.S. Review Notes: STA [illegible]

Date to: E.P.C. Development Services N/A Flood Plain and Enumerations N/A

Permit Requirements:

1250
Min. Septic Tank Capacity

990
Min. Absorption Area

E.H. Specialist Neil Mary Date 1/23/14 ☒ Approved ☐ Denied

NM

Reviewed 2014 approved fee (11/20/13)

1) We require an original copy of your PERCOLATION TEST with a licensed engineer's (P.E.) stamp and signature as well as a plot plan of the test hole locations with measurements from a fixed reference point.

2) Property address or lot number must be posted and clearly visible from the road. The percolation holes must be clearly marked or an additional charge for a return trip to the site may be assessed.

3) A plot plan must be drawn on an 8 ½" x 11" sheet of paper and shall include the following items:
   a) North Arrow
   b) Property Lines
   c) Property Dimensions
   d) All Existing and Proposed Buildings
   e) Proposed Septic System Site
   f) Alternate Septic System Site
   g) Driveway & Name of Adjoining Street
   h) Distance of Percolation Test to Two Property Lines.

4) Additional items that shall be included on the plot plan if they apply to your site:
   a) Proposed &/or Existing Wells
   b) Wells on Adjacent Properties
   c) Water Lines
   d) Bodies of water (ie: Lake, Pond)
   e) Drainage Ways; Existing or Proposed (ie: Streams, Dry Gulch, etc…)
   f) Subsoil Drains

5) Please provide below complete and accurate directions to the property from a main highway.

Notify Environmental Health of any change of ownership, type of business activity, business name, or billing address by calling (719) 578-3199. Failure to notify Environmental Health may result in late penalties, Permit/License denial or revocation, and business closure. PERMITS/LICENSES TO OPERATE AND ANNUAL FEE PAYMENTS ARE NOT TRANSFERABLE. Permits become void on change of ownership. New owners must apply and pay for a new Permit(s)/License(s) prior to beginning operation.

Attn: SHARON BOWEN
14060 BLACK FOREST RD
COLORADO SPRINGS, CO
80908-2853

El Paso County, CO Public Health
Prevent • Promote • Protect

EL PASO COUNTY PUBLIC HEALTH
ENVIRONMENTAL HEALTH DIVISION
1675 W. GARDEN OF THE GODS ROAD, SUITE 2044
COLORADO SPRINGS, CO 80907
PHONE: (719) 578-3199 FAX: (719) 578-3188
www.elpasocountyhealth.org

MAJOR REPAIR PERMIT - OWTS BLAC

Valid From 1/27/2014 To 1/27/2015

PERMITEE : SHARON BOWEN
14060 BLACK FOREST RD
COLORADO SPRINGS, CO 80908-2853

OWNER NAME : **SHARON BOWEN**

Onsite ID: ON0021115
Tax Schedule # : 5206000063
Permit Issue Date: 01/27/2014
Dwelling Type: RESIDENTIAL
# of Bedrooms (if Res): 3
Proposed Use (if Comm):
Designed Gallons/Day:
Water Source: PRIVATE WELL

System Installation Requirements :

- **Install soil treatment area (S.T.A.) in area of the profile pit observation that was performed on January 20, 2014 at a maximum depth, from bottom of trench of 36 inches.**
- **A trench system is preferred but if a bed system is installed, it shall not exceed a maximum width of 12 ft.**

Septic Tank Capacity Required: 1250 **(Gallons)** **Soil Treatment Area Required:** 990 **(SQ. Feet)**

The Health Officer shall assume no responsibility in case of failure or inadequacy of an Onsite Wastewater Treatment System, beyond consulting in good faith with the property owner or representative. Access to the property shall be authorized at reasonable time for the purpose of making such inspections as are necessary to determine compliance with the requirements of this law (permit)

Installer inspection request line: Call (719) 575-8699 before 8:30 a.m. of the day that the inspection is requested
Weekends & Holidays excluded.

This permit is issued in accordance with 25-10-106 Colorado Revised Statutes. The PERMIT EXPIRES upon completion/installation of the Onsite Wastewater Treatment System, or at the end of twelve (12) months from date of issue, whichever occurs first. If both a Building Permit and an Onsite Wastewater Treatment System Permit are issued for the same property and construction has not commenced prior to the expiration date of the Building Permit, the Onsite Wastewater Permit shall expire at the same time as the Building Permit. This permit is revocable if all stated requirements are not met. Onsite Wastewater Treatment System to be installed by an El Paso County Licensed System Contractor, or the property owner.

Authorized By: Environmental Health Specialist