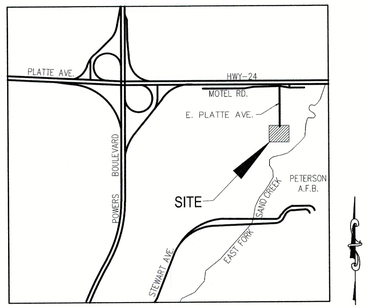

VICINITY MAP

N.T.S.

ENGINEERING RECORD DRAWINGS

ENGINEERING RECORD DRAWINGS

John P. Schwab Date: 11/17/26

JOHN P. SCHWAB, PE# 29891
FOR AND ON BEHALF OF JPS ENGINEERING, INC.

CLEARWAY, LOT 5

COUNTY OF EL PASO, STATE OF COLORADO

CONSTRUCTION PLANS

JUNE 2023

AGENCIES:

OWNER:	WIRENUT HOME SERVICES PO BOX 2245 FORT COLLINS, CO 80522 TRENT URBAN (719) 227-0500
DEVELOPER:	HAMMERS CONSTRUCTION 1411 WOOLSEY HEIGHTS COLORADO SPRINGS, CO 80915 (719) 570-1599
CIVIL ENGINEER:	M&S CIVIL CONSULTANTS, INC. 212 N WAHSATCH AVENUE, SUITE 305 COLORADO SPRINGS, CO 80903 VIRGIL A. SANCHEZ P.E. (719) 955-5485
COUNTY ENGINEERING:	EL PASO COUNTY PLANNING AND COMMUNITY DEVELOPMENT 2880 INTERNATIONAL CIRCLE, SUITE 110 COLORADO SPRINGS, CO 80910 GILBERT LAFORCE, P.E. (719)-520-7945
TRAFFIC ENGINEERING:	EL PASO COUNTY PUBLIC SERVICES & TRANS. DEPT. 3275 AKERS DRIVE COLORADO SPRINGS, CO 80922 JOSHUA PALMER, P.E. (719) 520-6460
FIRE DISTRICT:	CIMARRON HILLS FIRE DEPARTMENT 1835 TUSKEGEE PLACE COLORADO SPRINGS, CO 80915 (719) 591-0960
WATER RESOURCES:	CHEROKEE METRO DISTRICT 6250 PALMER PARK BLVD. COLORADO SPRINGS, CO 80915 JEFF MUNGER (719) 597-5080
GAS DEPARTMENT:	COLORADO SPRINGS UTILITIES 7710 DURANT DR. COLORADO SPRINGS, CO 80947 TIM WENDT (719) 668-3556
ELECTRIC DEPARTMENT:	MOUNTAIN VIEW ELECTRIC 11140 E. WOODMEN ROAD FALCON, CO 80831 (719) 495-2283
COMMUNICATIONS:	QWEST COMMUNICATIONS (U.N.C.C. LOCATORS) (800) 922-1987 AT&T (LOCATORS) (719) 635-3674

BENCHMARKS:

1. FIMS MONUMENT F81, LOCATED ON THE NORTH SIDE OF EAST PLAT AVE. 50' WEST OF FORD STREET.
   ELEV.=6275.86' (NAVD88)

2. MUELLER BOLT ON HYDRANT FLANGE, HYDRANT LOCATED AT THE SW CORNER OF LOT 3.
   ELEV.=6265.48' (NAVD88)

BASIS OF BEARINGS

THE EASTERLY LINE OF LOTS 2 AND 3, OF "CLEARWAY NO 2" PLAT NO 10231 OF THE RECORDS OF EL PASO COUNTY, COLORADO, BEING MONUMENTED AT THE SOUTH END BY A 1.5" ALUMINUM CAP STAMPED PLS 38658, FROM WHICH A NAIL & WASHER, EL: 6267.44 BEARS N00°00'00"W, A DISTANCE OF 300.02 FEET.

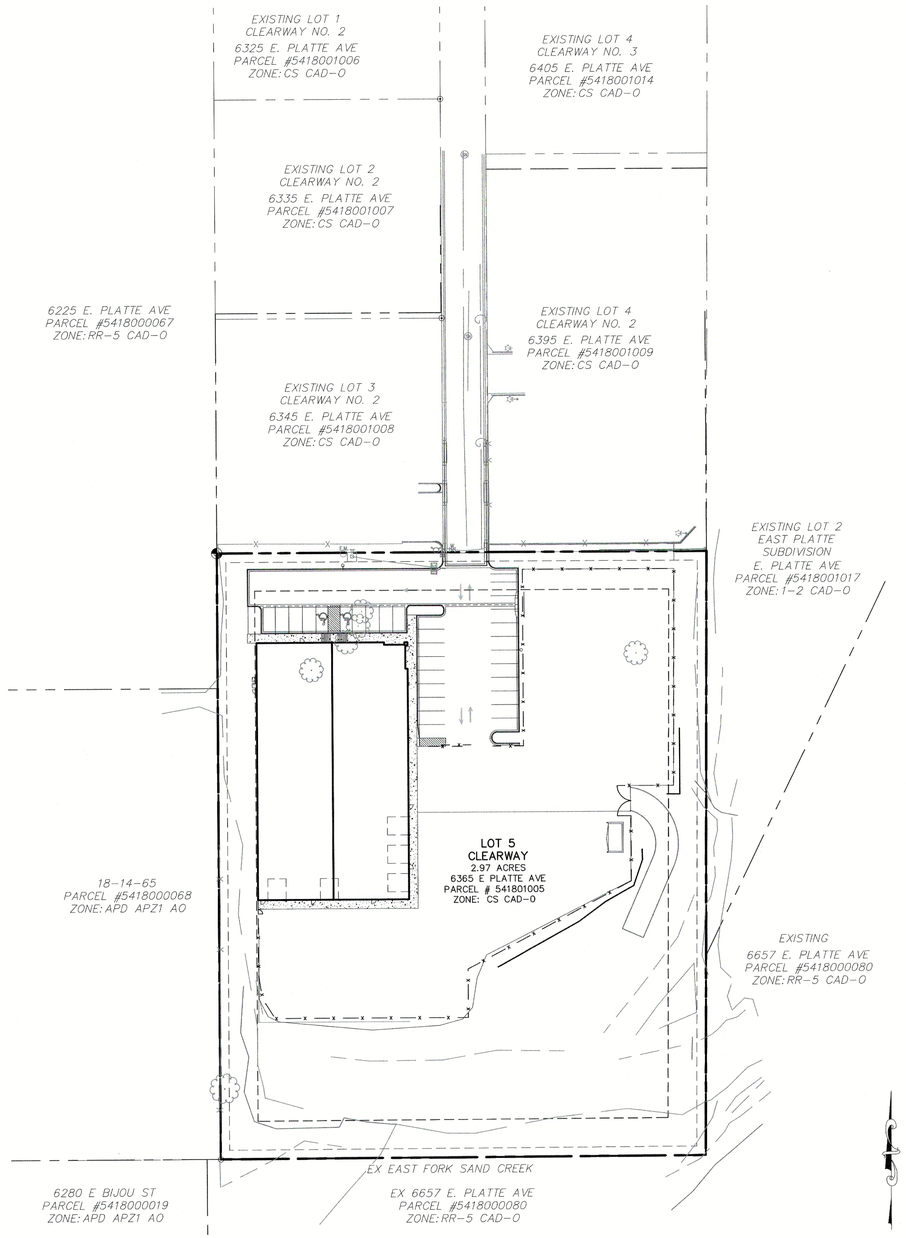

SITE MAP

N.T.S.

DESIGN ENGINEER'S STATEMENT

THESE DETAILED PLANS AND SPECIFICATIONS WERE PREPARED UNDER MY DIRECTION AND SUPERVISION. SAID PLANS AND SPECIFICATIONS HAVE BEEN PREPARED ACCORDING TO THE CRITERIA ESTABLISHED BY THE COUNTY FOR DETAILED ROADWAY, DRAINAGE, GRADING AND EROSION CONTROL PLANS AND SPECIFICATIONS, AND SAID PLANS AND SPECIFICATIONS ARE IN CONFORMITY WITH APPLICABLE MASTER DRAINAGE PLANS AND MASTER TRANSPORTATION PLANS. SAID PLANS AND SPECIFICATIONS MEET THE PURPOSES FOR WHICH THE PARTICULAR ROADWAY AND DRAINAGE FACILITIES ARE DESIGNED AND ARE CORRECT TO THE BEST OF MY KNOWLEDGE AND BELIEF. I ACCEPT RESPONSIBILITY FOR ANY LIABILITY CAUSED BY ANY NEGLIGENT ACTS, ERRORS OR OMISSIONS ON MY PART IN PREPARATION OF THESE DETAILED PLANS AND SPECIFICATIONS.

COLORADO REGISTERED PROFESSIONAL ENGINEER 37160 06/14/2023

VIRGIL A. SANCHEZ, COLORADO P.E. #37160
FOR AND ON BEHALF OF M & S CIVIL CONSULTANTS, INC.

OWNER/DEVELOPER'S STATEMENT:

I, THE DEVELOPER HAVE READ AND WILL COMPLY WITH THE REQUIREMENTS IN THESE DETAILED PLANS AND SPECIFICATIONS.

HAMMERS CONSTRUCTION, INC — 11-6-23 DATE

ADDRESS: 1411 WOOLSEY HEIGHTS, COLORADO SPRINGS, CO 80915

EL PASO COUNTY:

COUNTY PLAN REVIEW IS PROVIDED ONLY FOR GENERAL CONFORMANCE WITH COUNTY DESIGN CRITERIA. THE COUNTY IS NOT RESPONSIBLE FOR THE ACCURACY AND ADEQUACY OF THE DESIGN, DIMENSIONS, AND/OR ELEVATIONS WHICH SHALL BE CONFIRMED AT THE JOB SITE. THE COUNTY THROUGH THE APPROVAL OF THIS DOCUMENT ASSUMES NO RESPONSIBILITY FOR COMPLETENESS AND/OR ACCURACY OF THIS DOCUMENT.

FILED IN ACCORDANCE WITH THE REQUIREMENTS OF THE EL PASO COUNTY LAND DEVELOPMENT CODE, DRAINAGE CRITERIA MANUAL, VOLUMES 1 AND 2, AND ENGINEERING CRITERIA MANUAL AS AMENDED.

IN ACCORDANCE WITH ECM SECTION 1.12, THESE CONSTRUCTION DOCUMENTS WILL BE VALID FOR CONSTRUCTION FOR A PERIOD OF 2 YEARS FROM THE DATE SIGNED BY THE EL PASO COUNTY ENGINEER. IF CONSTRUCTION HAS NOT STARTED WITHIN THOSE 2 YEARS, THE PLANS WILL NEED TO BE RESUBMITTED FOR APPROVAL, INCLUDING PAYMENT OF REVIEW FEES AT THE PLANNING AND COMMUNITY DEVELOPMENT DIRECTORS DISCRETION.

Accepted for File
By: Gilbert LaForce, P.E.
Engineering Manager
Date: 11/16/2023 5:22:31 PM
El Paso County Department of Public Works

COU — DATE

SHEET INDEX

SHEET 1	TITLE SHEET
SHEET 2	CONSTRUCTION NOTES & DETAILS
SHEET 3	DEMOLITION PLAN
SHEET 4	STREET IMPROVEMENT PLAN
SHEET 5	STRIPING AND SIGNAGE PLAN
SHEET 6	STORM SEWER PLAN AND PROFILE (STM1, STM1LAT1, STM1LAT2)
SHEET 7	STORM SEWER PLAN AND PROFILE (STM2, STM3)
SHEET 8	STORM SEWER PLAN AND PROFILE (STM4, STM5, STM6)
SHEET 9	STORM SEWER NOTES AND DETAILS
SHEET 10	STORM SEWER DETAILS
SHEET 11	STORM SEWER DETAILS
SHEET 12	STORM SEWER DETAILS
SHEET 13	STORM SEWER DETAILS
SHEET 14	OUTLET STRUCTURE POND 1 DETAILS
SHEET 15	OUTLET STRUCTURE POND 2 DETAILS
SHEET 16	OUTLET STRUCTURE POND 2 DETAILS
C1.1	SITE GRADING PLAN (AS-BUILT)

EL PASO COUNTY FILE NO. PCD # PPR-22-034

FOR LOCATING & MARKING GAS, ELECTRIC, WATER & TELEPHONE LINES
FOR BURIED UTILITY INFORMATION
48 HRS BEFORE YOU DIG
CALL 1-800-922-1987

CLEARWAY, LOT 5
TITLE SHEET
DATE: 06/13/2023
SHEET 1 OF 16
TS01
SCALE: HORIZONTAL: N/A VERTICAL: N/A
PROJECT NO. 44-042A
DESIGNED BY: DLM
DRAWN BY: CLP
CHECKED BY: DLM

212 N. WAHSATCH AVE. STE 305
COLORADO SPRINGS, CO 80903
PHONE: 719.955.5485
M&S CIVIL CONSULTANTS, INC.

FOR AND ON BEHALF OF M&S CIVIL CONSULTANTS, INC.
VIRGIL A. SANCHEZ, COLORADO P.E. NO. 37160
COLORADO REGISTERED PROFESSIONAL ENGINEER 37160 06/14/2023

REVISIONS:

NO:	DATE:	BY:	DESCRIPTION:	APR'D. BY:	DATE:

THE ENGINEER PREPARING THESE PLANS WILL NOT BE RESPONSIBLE OR LIABLE FOR UNAUTHORIZED CHANGES TO OR USES OF THESE PLANS. ALL CHANGES TO THESE PLANS MUST BE IN WRITING AND MUST BE APPROVED BY THE PREPARER OF THESE PLANS.

CAUTION

File: O:\44042A-Wire Nut\Hammers\Dwg\Const Dwg\Street\44042A-TS01.dwg Plotstamp: 6/14/2023 3:40 PM

GENERAL CONSTRUCTION NOTES:

1. IT SHALL BE THE RESPONSIBILITY OF THE CONTRACTOR TO VERIFY THE EXISTENCE AND LOCATION OF ALL UNDERGROUND UTILITIES ALONG THE ROUTE OF THE WORK. THE OMISSION FROM OR THE INCLUSION OF UTILITY LOCATIONS ON THE PLANS IS NOT TO BE CONSIDERED AS THE NONEXISTENCE OF OR A DEFINITE LOCATION OF EXISTING UNDERGROUND UTILITIES.
2. THE CONTRACTOR WILL TAKE THE NECESSARY PRECAUTIONS TO PROTECT EXISTING UTILITIES FROM DAMAGE DUE TO THIS OPERATION. ANY DAMAGE TO THE UTILITIES WILL BE REPAIRED AT THE CONTRACTOR'S EXPENSE, AND ANY SERVICE DISRUPTION WILL BE SETTLED BY THE CONTRACTOR.
3. ADDITIONAL EROSION CONTROL STRUCTURES MAY BE REQUIRED AT THE TIME OF CONSTRUCTION.
4. ALL BACKFILL, SUB-BASE, AND/OR BASE COURSE (CLASS 6) MATERIAL SHALL BE COMPACTED PER THE SOILS ENGINEER'S RECOMMENDATIONS, AND APPROVED BY EL PASO COUNTY PCD.
5. ALL STATIONING IS CENTERLINE OF IMPROVEMENTS UNLESS OTHERWISE INDICATED. ALL ELEVATIONS ARE FLOW LINE UNLESS OTHERWISE INDICATED AS TOP BACK OF CURB (TBC), ASPHALT (ASP), OR TOP OF INLET OR BOX (TOB).
6. ALL DISTURBED PAVEMENT EDGES SHALL BE CUT TO NEAT LINES. REPAIR SHALL CONFORM TO EPC ECM APPENDIX K – 1.2C.
7. ALL INTERSECTION ACCESSES TO BE CONSTRUCTED WITH A 25 FOOT SIGHT VISIBILITY TRIANGLES IS REQUIRED AND THERE SHALL BE NO OBSTRUCTIONS GREATER THAN 18" VERTICAL IN THIS AREA.
8. ALL CULVERTS AND STORM DRAIN PIPES SHALL BE SMOOTH INTERIOR CORRUGATED POLYETHYLENE PIPE (HDPE), REINFORCED CONCRETE PIPE (RCP). ALL CULVERTS SHALL BE PLACED COMPLETE WITH FLARED END SECTIONS. ADEQUACY OF MATERIAL THICKNESS FOR ANY CSP INSTALLED SHALL BE VERIFIED BY OWNER'S GEOTECHNICAL ENGINEER TO SUPPORT MINIMUM 50 YEAR DESIGN LIFE. CULVERTS MUST CONFORM TO EPC ECM SECTION 3.32 – CULVERTS.
9. ASPHALT THICKNESS AND BASE COURSE THICKNESS (COMPACTED) FOR ROADS SHALL BE PER DESIGN REPORT BY OWNER'S GEOTECHNICAL ENGINEER. OWNER'S GEOTECHNICAL ENGINEER TO BE ON SITE AT THE TIME OF ROAD CONSTRUCTION TO EVALUATE SOIL CONDITIONS AND DETERMINE IF ADDITIONAL MEASURES ARE NECESSARY TO ASSURE STABILITY OF THE NEW ROADS. PAVEMENT DESIGN SHALL BE APPROVED BY EL PASO COUNTY PCD PRIOR TO CONSTRUCTION.

STANDARD NOTES FOR EL PASO COUNTY CONSTRUCTION PLANS

1. ALL DRAINAGE AND ROADWAY CONSTRUCTION SHALL MEET THE STANDARDS AND SPECIFICATIONS OF THE CITY OF COLORADO SPRINGS/EL PASO COUNTY DRAINAGE CRITERIA MANUAL, VOLUMES 1 AND 2, AND THE EL PASO COUNTY ENGINEERING CRITERIA MANUAL.
2. CONTRACTOR SHALL BE RESPONSIBLE FOR THE NOTIFICATION AND FIELD NOTIFICATION OF ALL EXISTING UTILITIES, WHETHER SHOWN ON THE PLANS OR NOT, BEFORE BEGINNING CONSTRUCTION. LOCATION OF EXISTING UTILITIES SHALL BE VERIFIED BY THE CONTRACTOR PRIOR TO CONSTRUCTION. CALL 811 TO CONTACT THE UTILITY NOTIFICATION CENTER OF COLORADO (UNCC).
3. CONTRACTOR SHALL KEEP A COPY OF THESE APPROVED PLANS, THE GRADING AND EROSION CONTROL PLAN, THE STORMWATER MANAGEMENT PLAN (SWMP), THE SOILS AND GEOTECHNICAL REPORT, AND THE APPROPRIATE DESIGN AND CONSTRUCTION STANDARDS AND SPECIFICATIONS AT THE JOB SITE AT ALL TIMES, INCLUDING THE FOLLOWING:
   a. EL PASO COUNTY ENGINEERING CRITERIA MANUAL (ECM)
   b. CITY OF COLORADO SPRINGS/EL PASO COUNTY DRAINAGE CRITERIA MANUAL, VOLUMES 1 AND 2
   c. COLORADO DEPARTMENT OF TRANSPORTATION (CDOT) STANDARD SPECIFICATIONS FOR ROAD AND BRIDGE CONSTRUCTION
   d. CDOT M & S STANDARDS
4. NOTWITHSTANDING ANYTHING DEPICTED IN THESE PLANS IN WORDS OR GRAPHIC REPRESENTATION, ALL DESIGN AND CONSTRUCTION RELATED TO ROADS, STORM DRAINAGE AND EROSION CONTROL SHALL CONFORM TO THE STANDARDS AND REQUIREMENTS OF THE MOST RECENT VERSION OF THE RELEVANT ADOPTED EL PASO COUNTY STANDARDS, INCLUDING THE LAND DEVELOPMENT CODE, THE ENGINEERING CRITERIA MANUAL, THE DRAINAGE CRITERIA MANUAL, AND THE DRAINAGE CRITERIA MANUAL VOLUME 2. ANY DEVIATIONS FROM REGULATIONS AND STANDARDS MUST BE REQUESTED, AND APPROVED, IN WRITING. ANY MODIFICATIONS NECESSARY TO MEET CRITERIA AFTER-THE-FACT WILL BE ENTIRELY THE DEVELOPER'S RESPONSIBILITY TO RECTIFY.
5. IT IS THE DESIGN ENGINEER'S RESPONSIBILITY TO ACCURATELY SHOW EXISTING CONDITIONS, BOTH ONSITE AND OFFSITE, ON THE CONSTRUCTION PLANS. ANY MODIFICATIONS NECESSARY DUE TO CONFLICTS, OMISSIONS, OR CHANGED CONDITIONS WILL BE ENTIRELY THE DEVELOPER'S RESPONSIBILITY TO RECTIFY.
6. CONTRACTOR SHALL SCHEDULE A PRE-CONSTRUCTION MEETING WITH EL PASO COUNTY PCD – INSPECTIONS, PRIOR TO STARTING CONSTRUCTION.
7. IT IS THE CONTRACTOR'S RESPONSIBILITY TO UNDERSTAND THE REQUIREMENTS OF ALL JURISDICTIONAL AGENCIES AND TO OBTAIN ALL REQUIRED PERMITS, INCLUDING BUT NOT LIMITED TO EL PASO COUNTY EROSION AND STORMWATER QUALITY CONTROL PERMIT (ESQCP), REGIONAL BUILDING FLOODPLAIN DEVELOPMENT PERMIT, U.S. ARMY CORPS OF ENGINEERS-ISSUED 401 AND/OR 404 PERMITS, AND COUNTY AND STATE FUGITIVE DUST PERMITS.
8. CONTRACTOR SHALL NOT DEVIATE FROM THE PLANS WITHOUT FIRST OBTAINING WRITTEN APPROVAL FROM THE DESIGN ENGINEER AND PCD. CONTRACTOR SHALL NOTIFY THE DESIGN ENGINEER IMMEDIATELY UPON DISCOVERY OF ANY ERRORS OR INCONSISTENCIES.
9. ALL STORM DRAIN PIPE SHALL BE CLASS III RCP UNLESS OTHERWISE NOTED AND APPROVED BY PCD.
10. CONTRACTOR SHALL COORDINATE GEOTECHNICAL TESTING PER ECM STANDARDS. PAVEMENT DESIGN SHALL BE APPROVED BY EL PASO COUNTY PCD PRIOR TO PLACEMENT OF CURB AND GUTTER AND PAVEMENT.
11. ALL CONSTRUCTION TRAFFIC MUST ENTER/EXIT THE SITE AT APPROVED CONSTRUCTION ACCESS POINTS.
12. SIGHT VISIBILITY TRIANGLES AS IDENTIFIED IN THE PLANS SHALL BE PROVIDED AT ALL INTERSECTIONS. OBSTRUCTIONS GREATER THAN 18 INCHES ABOVE FLOWLINE ARE NOT ALLOWED WITHIN SIGHT TRIANGLES.
13. SIGNING AND STRIPING SHALL COMPLY WITH EL PASO COUNTY DPW AND MUTCD CRITERIA. [IF APPLICABLE, ADDITIONAL SIGNING AND STRIPING NOTES WILL BE PROVIDED.]
14. CONTRACTOR SHALL OBTAIN ANY PERMITS REQUIRED BY EL PASO COUNTY DPW, INCLUDING WORK WITHIN THE RIGHT-OF-WAY AND SPECIAL TRANSPORT PERMITS.
15. THE LIMITS OF CONSTRUCTION SHALL REMAIN WITHIN THE PROPERTY LINE UNLESS OTHERWISE NOTED. THE OWNER/DEVELOPER SHALL OBTAIN WRITTEN PERMISSION AND EASEMENTS, WHERE REQUIRED, FROM ADJOINING PROPERTY OWNER(S) PRIOR TO ANY OFF-SITE DISTURBANCE, GRADING, OR CONSTRUCTION.

SIGNING AND STRIPING NOTES:

1. ALL SIGNS AND PAVEMENT MARKINGS SHALL BE IN COMPLIANCE WITH THE CURRENT MANUAL ON UNIFORM TRAFFIC CONTROL DEVICES (MUTCD).
2. REMOVAL OF EXISTING PAVEMENT MARKINGS SHALL BE ACCOMPLISHED BY A METHOD THAT DOES NOT MATERIALLY DAMAGE THE PAVEMENT. THE PAVEMENT MARKINGS SHALL BE REMOVED TO THE EXTENT THAT THEY WILL NOT BE VISIBLE UNDER DAY OR NIGHT CONDITIONS. AT NO TIME WILL IT BE ACCEPTABLE TO PAINT OVER EXISTING PAVEMENT MARKINGS.
3. ANY DEVIATION FROM THE STRIPING AND SIGNING PLAN SHALL BE APPROVED BY EL PASO COUNTY PLANNING AND COMMUNITY DEVELOPMENT.
4. ALL SIGNS SHOWN ON THE SIGNING AND STRIPING PLAN SHALL BE NEW SIGNS. EXISTING SIGNS MAY REMAIN OR BE REUSED IF THEY MEET CURRENT EL PASO COUNTY AND MUTCD STANDARDS.
5. STREET NAME AND REGULATORY STOP SIGNS SHALL BE ON THE SAME POST AT INTERSECTIONS.
6. ALL REMOVED SIGNS SHALL BE DISPOSED OF IN A PROPER MANNER BY THE CONTRACTOR.
7. ALL STREET NAME SIGNS SHALL HAVE "D" SERIES LETTERS, WITH LOCAL ROADWAY SIGNS BEING 4" UPPER-LOWER CASE LETTERING ON 8" BLANK AND NON-LOCAL ROADWAY SIGNS BEING 6" LETTERING, UPPER-LOWER CASE ON 12" BLANK, WITH A WHITE BORDER THAT IS NOT RECESSED. MULTI-LANE ROADWAYS WITH SPEED LIMITS OF 40 MPH OR HIGHER SHALL HAVE 8" UPPER-LOWER CASE LETTERING ON 18" BLANK WITH A WHITE BORDER THAT IS NOT RECESSED. THE WIDTH OF THE NON-RECESSED WHITE BORDERS SHALL MATCH PAGE 255 OF THE 2012 MUTCD "STANDARD HIGHWAY SIGNS"
8. ALL TRAFFIC SIGNS SHALL HAVE A MINIMUM HIGH INTENSITY PRISMATIC GRADE SHEETING.
9. ALL LOCAL RESIDENTIAL STREET SIGNS SHALL BE MOUNTED ON A 1.75" X 1.75" SQUARE TUBE SIGN POST AND STUB POST BASE. FOR OTHER APPLICATIONS, REFER TO THE CDOT STANDARD S-614-8 REGARDING USE OF THE P2 TUBULAR STEEL POST SLIPBASE DESIGN.
10. ALL SIGNS SHALL BE SINGLE SHEET ALUMINUM WITH 0.100" MINIMUM THICKNESS.
11. ALL LIMIT LINES/STOP LINES, CROSSWALK LINES, PAVEMENT LEGENDS, AND ARROWS SHALL BE A MINIMUM 125 MIL THICKNESS PREFORMED THERMOPLASTIC PAVEMENT MARKINGS WITH TAPERED LEADING EDGES PER CDOT STANDARD S-627-1. WORD AND SYMBOL MARKINGS SHALL BE THE NARROW TYPE. STOP BARS SHALL BE 24" IN WIDTH. CROSSWALKS LINES SHALL BE 12" WIDE AND 8' LONG PER CDOT S-627-1.
12. ALL LONGITUDINAL LINES SHALL BE A MINIMUM 15MIL THICKNESS EPOXY PAINT. ALL NON-LOCAL RESIDENTIAL ROADWAYS SHALL INCLUDE BOTH RIGHT AND LEFT EDGE LINE STRIPING AND ANY ADDITIONAL STRIPING AS REQUIRED BY CDOT S-627-1.
13. THE CONTRACTOR SHALL NOTIFY EL PASO COUNTY PLANNING AND COMMUNITY DEVELOPMENT (719) 520-6819 PRIOR TO AND UPON COMPLETION OF SIGNING AND STRIPING.
14. THE CONTRACTOR SHALL OBTAIN A WORK IN THE RIGHT OF WAY PERMIT FROM THE EL PASO COUNTY DEPARTMENT OF PUBLIC WORKS (DPW) PRIOR TO ANY SIGNAGE OR STRIPING WORK WITHIN AN EXISTING EL PASO COUNTY ROADWAY.

SPECIAL NOTE:

THE PARTIES RESPONSIBLE FOR THIS PLAN HAVE FAMILIARIZED THEMSELVES WITH ALL CURRENT ACCESSIBILITY CRITERIA AND SPECIFICATIONS AND THE PROPOSED PLAN REFLECTS ALL SITE ELEMENTS REQUIRED BY THE APPLICABLE ADA DESIGN STANDARDS AND GUIDELINES AS PUBLISHED BY THE UNITED STATES DEPARTMENT OF JUSTICE. APPROVAL OF THIS PLAN BY EL PASO COUNTY DOES NOT ASSURE COMPLIANCE WITH THE ADA OR ANY REGULATIONS OR GUIDELINES ENACTED OR PROMULGATED UNDER OR WITH RESPECT TO SUCH LAWS.

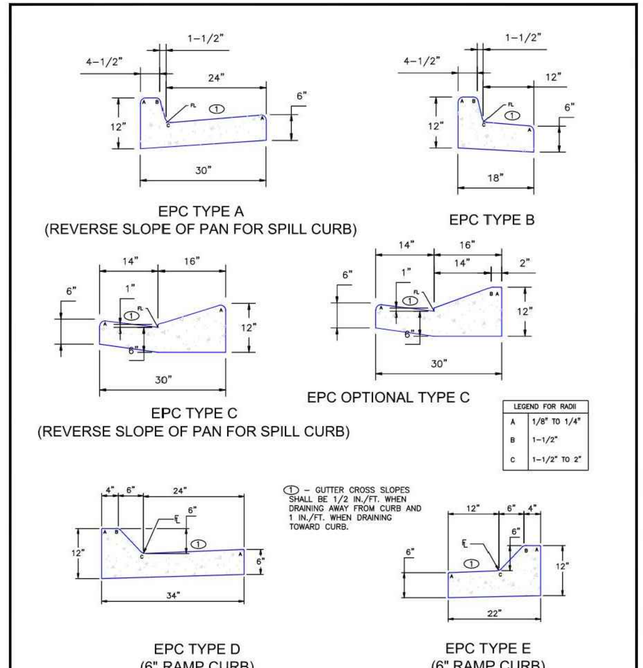

SCALE: NOT TO SCALE

DATE APPROVED: 8/11/11 André P. Brackin DEPARTMENT OF TRANSPORTATION	Typical Curb and Gutter Details Standard Drawing	EL PASO COUNTY DEPARTMENT OF TRANSPORTATION
	REVISION DATE: 12/8/15	FILE NAME: SD_2-20

TYPICAL CURB AND GUTTER DETAIL (SD 2-20C)

SCALE: NTS

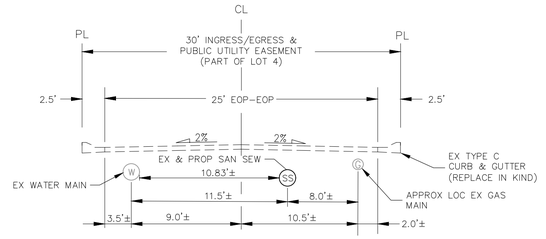

EX/PROP. E. PLATTE AVENUE

SCALE: NTS

ENGINEERING RECORD DRAWINGS

John P. Schwab Date: 10/6/26

JOHN P. SCHWAB, PE# 29891
FOR AND ON BEHALF OF JPS ENGINEERING, INC.

FOR LOCATING & MARKING GAS, ELECTRIC, WATER & TELEPHONE LINES
FOR BURIED UTILITY INFORMATION
48 HRS BEFORE YOU DIG
CALL 1-800-922-1987

CLEARWAY, LOT 5
CONSTRUCTION NOTES AND DETAILS

PROJECT NO. 44-042A | SCALE: HORIZONTAL: N/A VERTICAL: N/A | DATE: 06/13/2023 | SHEET 2 OF 16 | CN02

DESIGNED BY: DLM
DRAWN BY: CLP
CHECKED BY: DLM

212 N. WAHSATCH AVE, STE 305
COLORADO SPRINGS, CO 80903
PHONE: 719.955.5485
CIVIL CONSULTANTS, INC.

FOR AND ON BEHALF OF M&S CIVIL CONSULTANTS, INC.

VIRGIL A. SANCHEZ, COLORADO P.E. NO. 37160
37160 PROFESSIONAL ENGINEER
06/14/2023

REVISIONS: NO.	DATE:	BY:	DESCRIPTION:	APPR'D. BY:	DATE:

THE ENGINEER PREPARING THESE PLANS WILL NOT BE RESPONSIBLE OR LIABLE FOR UNAUTHORIZED CHANGES TO OR USES OF THESE PLANS. ALL CHANGES TO THE PLANS MUST BE IN WRITING AND MUST BE APPROVED BY THE PREPARER OF THESE PLANS.

CAUTION

File: O:\44042A-Wire Nut\Hammers\Dwg\Const Dwg\Sheet\44042A-CN02.dwg Plotstamp: 6/14/2023 3:35 PM

ABBREVIATION LEGEND

CL	CENTERLINE INTERSECTION	LT	LEFT
FL-FL	FLOWLINE INTERSECTION	RT	RIGHT
BT	BEGIN TRANSITION	FL	FLOWLINE
ET	END TRANSITION	TBC	TOP BACK OF CURB
PC	POINT OF CURVE	XPAN	CROSSPAN
PCC	POINT OF COMPOUND CURVE	STD	STANDARD
PCR	POINT OF CURB RETURN	SHT	SHEET
PRC	POINT OF REVERSE CURVE	P&P	PLAN AND PROFILE
PT	POINT OF TANGENT	C&G	CURB AND GUTTER
EL	ELEVATION	W	WEST
CDS	CUL-DE-SAC	E	EAST
KN	KNUCKLE	ROW	RIGHT OF WAY
LP	LOW POINT	EOP	EDGE OF PAVEMENT
N	NORTH	WTR	WATER
S	SOUTH	SAN	SANITARY SEWER
HP	HIGH POINT	PVT	PRIVATE
PUB	PUBLIC	WV	WATER VALVE
C&G	CURB AND GUTTER	PED	PEDESTRIAN
CMD	CHEROKEE METRO DISTRICT		

LEGEND

- SAWCUT LINE
- SITE BOUNDARY
- ADJACENT PROPERTY
- EXIST STORM SEWER LINE
- EX. UNDERGROUND ELECTRIC LINE
- EX. SANITARY SEWER LINE — SS
- EX. WATER LINE — WL
- EX. GAS MAIN — G
- EX. FENCE — X
- EASEMENT
- EX. STORM MH — ST
- EX. SANITARY MANHOLE — SS
- EX. WATER VALVE
- PAVEMENT DEMOLITION AREA
- C&G DEMOLITION AREA

EXISTING LOT 4 CLEARWAY NO. 2

EXISTING 6" RET WALL

EXISTING 8" RET WALL W/ CHAINLINK FENCE

PROPERTY LINE

EX 6' EASEMENT

SAWCUT & REMOVE APPROX 2380 SF ASPHALT – REPLACE IN KIND

"CAUTION" EXISTING GAS MAIN

STA 2+87.91
REMOVE & REPLACE APPROX 73 LF CURB AND GUTTER

EXISTING CMD SAN SEWER MH TO REMAIN

EXISTING TYPE C C&G TO REMAIN

EXISTING GAS MAIN TO REMAIN

EXISTING CMD 10" PVC SAN SEW TO REMAIN

EXISTING CHAINLINK FENCE REMOVE AND REPLACE AJACENT TO CURB AND GUTTER

EXISTING EOP

E PLATTE AVE.

EXISTING CMD SAN SEWER MH TO REMAIN

1+00

2+00

3+00

30' INGRESS/EGRESS & UTILITY EASEMENT

25'

2.00'

6.0'

138.75'

14.0'

SAWCUT LINE

62.60'

76.78'

EXISTING LOT 4 CLEARWAY NO. 2

EXISTING CMD 8" PVC WATER MAIN TO REMAIN

EXISTING TYPE C C&G TO REMAIN

REMOVE APPROX 35 LF 10" PVC SAN SEW – SEE SANITARY SEWER PLANS BY M&S CIVIL CONSULTANTS

REMOVE APPROX 2380 SF ASPHALT

50.25'

5.00'

10.00' DRAINAGE ESMT

STA 2+87.46
REMOVE & REPLACE APPROX 70 LF CURB AND GUTTER

REMOVE & REPLACE APPROX 252 SF CONCRETE DRIVE & CURB AND GUTTER

EXISTING GRAVEL EDGE

EXISTING TELE PED TO REMAIN

EXISTING ELEC PULL BOX

EXISTING U/G ELEC

EXISTING FIRE HYDRANT TO REMAIN

EXISTING TYPE A C&G TO REMAIN

EXISTING ELEC TRANSFORMER

EXISTING ELEC METER

EXISTING CHAINLINK FENCE

LOT 5
CLEARWAY NO.2

EXISTING TREES/SHRUBS (TYP)

EXISTING LOT 2 CLEARWAY NO. 2

EXISTING LOT 3 CLEARWAY NO. 2

EXISTING GRAVEL EDGE

PROPERTY LINE

EX. 6' EASEMENT

PROPERTY LINE

EAST PLATTE AVE. DEMOLITION PLAN

1" = 20'

0 10 20 40

Scale in Feet

ENGINEERING RECORD DRAWINGS

John P. Schwab Date: 10/6/26

JOHN P. SCHWAB, PE# 29891
FOR AND ON BEHALF OF JPS ENGINEERING, INC.

CLEARWAY, LOT 5

DEMOLITION PLAN

DATE: 06/13/2023

SHEET 3 OF 16

SI01

PROJECT NO. 44-042A

SCALE: HORIZONTAL: 1"=20' VERTICAL: N/A

DESIGNED BY: DLM
DRAWN BY: CLP
CHECKED BY: DLM

212 N. WAHSATCH AVE. STE 305
COLORADO SPRINGS, CO 80903
PHONE: 719.955.5485

CIVIL CONSULTANTS, INC.

FOR AND ON BEHALF OF M&S CIVIL CONSULTANTS, INC.

VIRGIL A. SANCHEZ, COLORADO P.E. NO. 37160

COLORADO REGISTERED 37160 PROFESSIONAL ENGINEER
06/14/2023

REVISIONS:

NO.	DATE:	BY:	DESCRIPTION:	APRV'D. BY:	DATE:

THE ENGINEER PREPARING THESE PLANS WILL NOT BE RESPONSIBLE, OR LIABLE FOR, UNAUTHORIZED CHANGES TO OR USES OF THESE PLANS. ALL CHANGES TO THE PLANS MUST BE IN WRITING AND MUST BE APPROVED BY THE PREPARER OF THESE PLANS.

CAUTION

File: O:\44042A-Wire Nut\Hammers\Dwg\Const Dwg\Street\44042A-SI01.dwg Plotstamp: 6/14/2023 3:35 PM

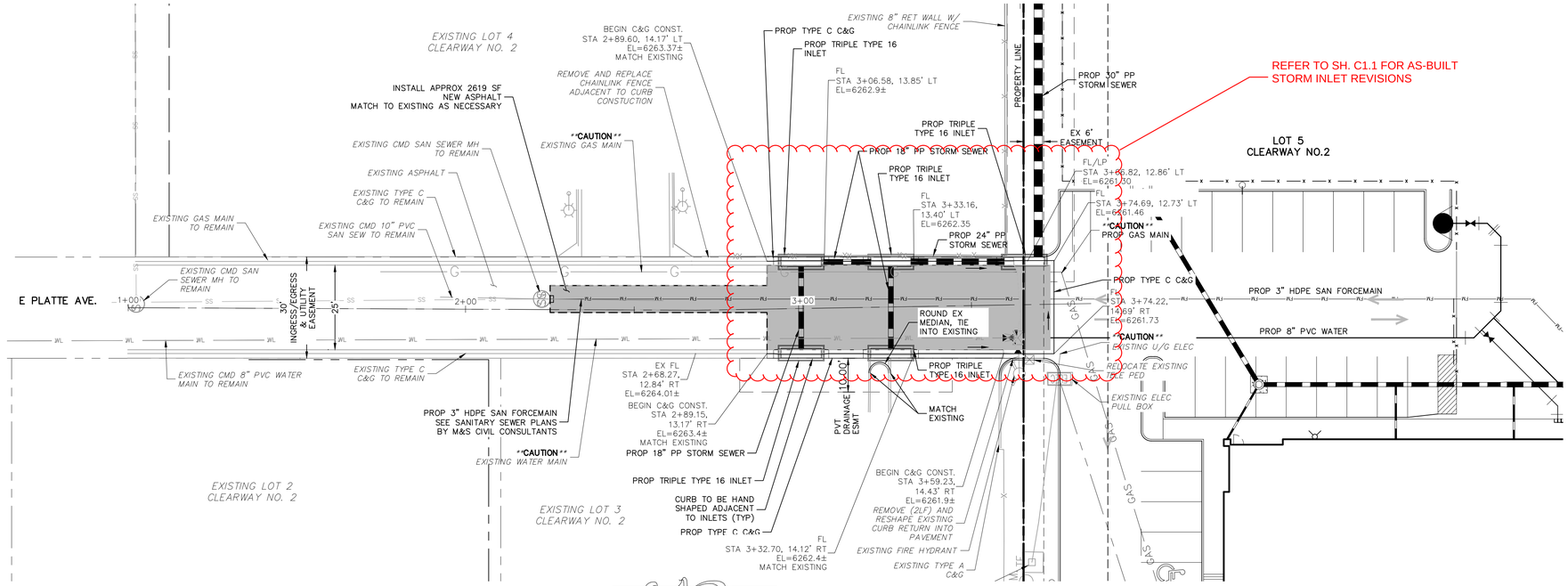

EX EAST PLATTE AVE.
STA 1+00.00 - 3+74.69

ABBREVIATION LEGEND

CL	CENTERLINE INTERSECTION	LT	LEFT
FL–FL	FLOWLINE INTERSECTION	RT	RIGHT
BT	BEGIN TRANSITION	FL	FLOWLINE
ET	END TRANSITION	TBC	TOP BACK OF CURB
PC	POINT OF CURVE	XPAN	CROSSPAN
PCC	POINT OF COMPOUND CURVE	STD	STANDARD
PCR	POINT OF CURB RETURN	SHT	SHEET
PRC	POINT OF REVERSE CURVE	P&P	PLAN AND PROFILE
PT	POINT OF TANGENT	C&G	CURB AND GUTTER
EL	ELEVATION	W	WEST
CDS	CUL-DE-SAC	E	EAST
KN	KNUCKLE	ROW	RIGHT OF WAY
LP	LOW POINT	EOP	EDGE OF PAVEMENT
N	NORTH	WTR	WATER
S	SOUTH	SAN	SANITARY SEWER
HP	HIGH POINT	PVT	PRIVATE
PUB	PUBLIC	WV	WATER VALVE
C&G	CURB AND GUTTER	PED	PEDESTRIAN
CMD	CHEROKEE METRO DISTRICT		

LEGEND

- SAWCUT LINE
- SITE BOUNDARY
- ADJACENT PROPERTY
- EXIST STORM SEWER LINE
- EX. UNDERGROUND ELECTRIC LINE
- EX. SANITARY SEWER LINE (SS)
- EX. WATER LINE (WL)
- EX. GAS MAIN (G)
- EX. FENCE (X)
- EASEMENT
- PROP C&G
- EX. STORM MH (ST)
- EX. SANITARY MANHOLE (SS)
- EX. WATER VALVE
- NEW ASPHALT – MATCH EXISTING

1" = 20'

0 10 20 40

Scale in Feet

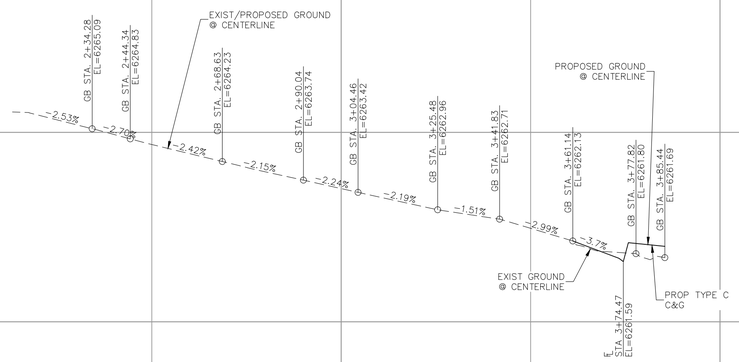

EX EAST PLATTE AVE.

ENGINEERING RECORD DRAWINGS

John P. Schwab Date: 10/6/26

JOHN P. SCHWAB, PE# 29891
FOR AND ON BEHALF OF JPS ENGINEERING, INC.

CLEARWAY, LOT 5
STREET IMPROVEMENT PLAN

PROJECT NO. 44-042A | DESIGNED BY: DLM | DRAWN BY: CLP | CHECKED BY: DLM | SCALE: HORIZONTAL: 1"=20' VERTICAL: 1" = 2' | DATE: 06/13/2023 | SHEET 4 OF 16 | SI02

212 N. WAHSATCH AVE., STE 305
COLORADO SPRINGS, CO 80903
PHONE: 719.955.5485

CIVIL CONSULTANTS, INC.

FOR AND ON BEHALF OF M&S CIVIL CONSULTANTS, INC.

VIRGIL A. SANCHEZ, COLORADO P.E. NO. 37160
REGISTERED PROFESSIONAL ENGINEER
37160
06/14/2023

REVISIONS:

NO.	DATE:	BY:	DESCRIPTION:	APP'D BY:	DATE:

THE ENGINEER PREPARING THESE PLANS WILL NOT BE RESPONSIBLE, OR LIABLE FOR, UNAUTHORIZED CHANGES TO OR USES OF THESE PLANS. ALL CHANGES TO THE PLANS MUST BE IN WRITING AND MUST BE APPROVED BY THE PREPARER OF THESE PLANS.

CAUTION

File: O:\44042A-Wire Nut\Hammers\Dwg\Const Dwg\Street\44042A-SI02.dwg Plotstamp: 6/14/2023 3:35 PM

ABBREVIATION LEGEND

CL	CENTERLINE INTERSECTION	LT	LEFT
FL–FL	FLOWLINE INTERSECTION	RT	RIGHT
BT	BEGIN TRANSITION	FL	FLOWLINE
ET	END TRANSITION	TBC	TOP BACK OF CURB
PC	POINT OF CURVE	XPAN	CROSSPAN
PCC	POINT OF COMPOUND CURVE	STD	STANDARD
PCR	POINT OF CURB RETURN	SHT	SHEET
PRC	POINT OF REVERSE CURVE	P&P	PLAN AND PROFILE
PT	POINT OF TANGENT	C&G	CURB AND GUTTER
EL	ELEVATION	W	WEST
CDS	CUL-DE-SAC	E	EAST
KN	KNUCKLE	ROW	RIGHT OF WAY
LP	LOW POINT	EOP	EDGE OF PAVEMENT
N	NORTH	WTR	WATER
S	SOUTH	SAN	SANITARY SEWER
HP	HIGH POINT	PVT	PRIVATE
PUB	PUBLIC	WV	WATER VALVE
C&G	CURB AND GUTTER	PED	PEDESTRIAN
CMD	CHEROKEE METRO DISTRICT		

LEGEND

SITE BOUNDARY

ADJACENT PROPERTY

EX. FENCE — X —

EASEMENT

PROP C&G — ST —

NOTE TO CONTRACTOR:

1. ALL SIGNAGE INSTALLATION IS TO BE IN COMPLIANCE WITH THE MANUAL ON UNIFORM TRAFFIC CONTROL DEVICES (MUTCD)

NOTE:

STRIPING ALONG CURB FACE AND TOP OF CURB SHALL BE:

1. 6" RED TRAFFIC PAINT STRIPE
2. 4" WHITE REFLECTIVE LETTERING/WORDING WITH 3/4" STROKE STATING NO PARKING FIRE LANE
3. LETTERING/WORDING SPACED EVERY 25'

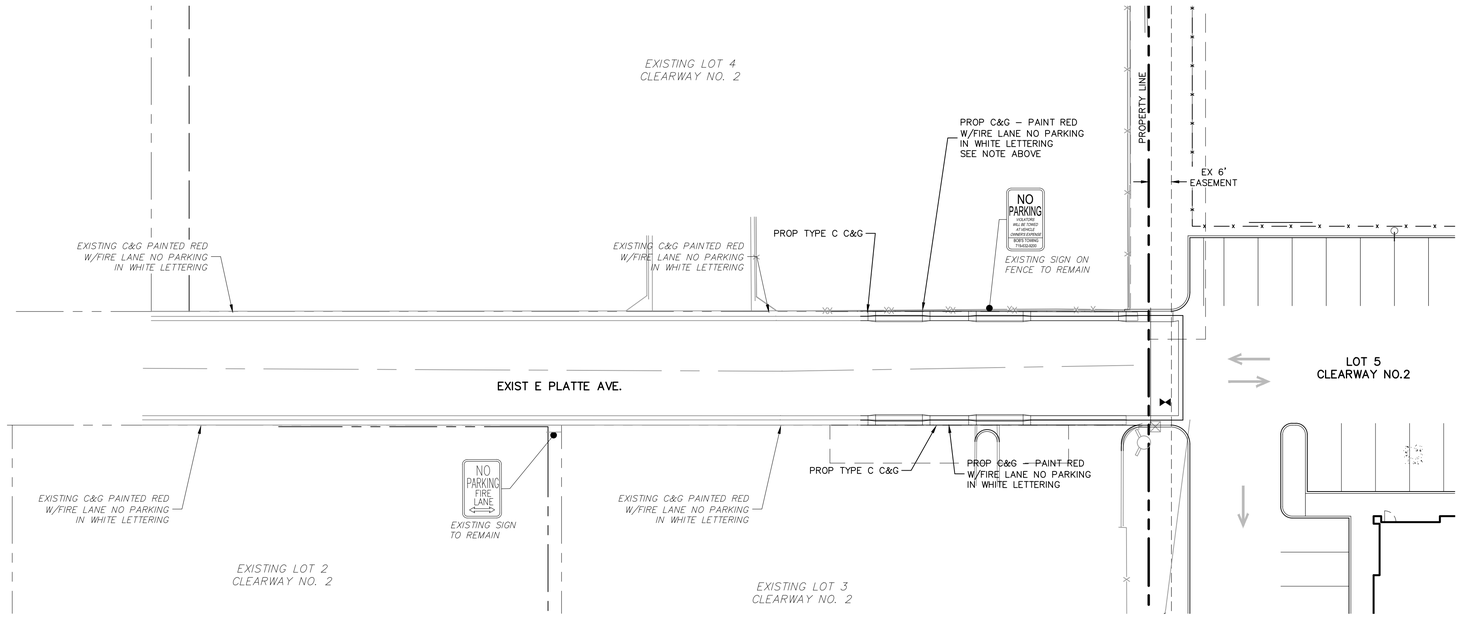

1" = 20'

0 10 20 40

Scale in Feet

ENGINEERING RECORD DRAWINGS

John P. Schwab Date: 10/6/26

JOHN P. SCHWAB, PE# 29891
FOR AND ON BEHALF OF JPS ENGINEERING, INC.

CLEARWAY, LOT 5

STRIPING AND SIGNAGE PLAN

PROJECT NO. 44-042A | SCALE: HORIZONTAL: 1"=20' VERTICAL: 1" = 2' | DATE: 06/13/2023 | SHEET 5 OF 16 | SI03

DESIGNED BY: DLM
DRAWN BY: CLP
CHECKED BY: DLM

212 N. WAHSATCH AVE. STE 305
COLORADO SPRINGS, CO 80903
PHONE: 719.955.5485

CIVIL CONSULTANTS, INC.

FOR AND ON BEHALF OF M&S CIVIL CONSULTANTS, INC.

VIRGIL A. SANCHEZ, COLORADO P.E. NO. 37160

COLORADO REGISTERED 37160 PROFESSIONAL ENGINEER
06/14/2023

REVISIONS:

NO.	DATE:	BY:	DESCRIPTION:	APRV'D. BY:	DATE:

THE ENGINEER PREPARING THESE PLANS WILL NOT BE RESPONSIBLE, OR LIABLE FOR, UNAUTHORIZED CHANGES TO OR USES OF THESE PLANS. ALL CHANGES TO THE PLANS MUST BE IN WRITING AND MUST BE APPROVED BY THE PREPARER OF THESE PLANS.

CAUTION

File: O:\44042A-Wire Nut\Hammers\Dwg\Const Dwg\Street\44042A-SI03.dwg Plotstamp: 6/14/2023 3:35 PM

ENGINEERING RECORD DRAWINGS

John P. Schwab Date: 10/6/26

JOHN P. SCHWAB, PE# 29891
FOR AND ON BEHALF OF JPS ENGINEERING, INC.

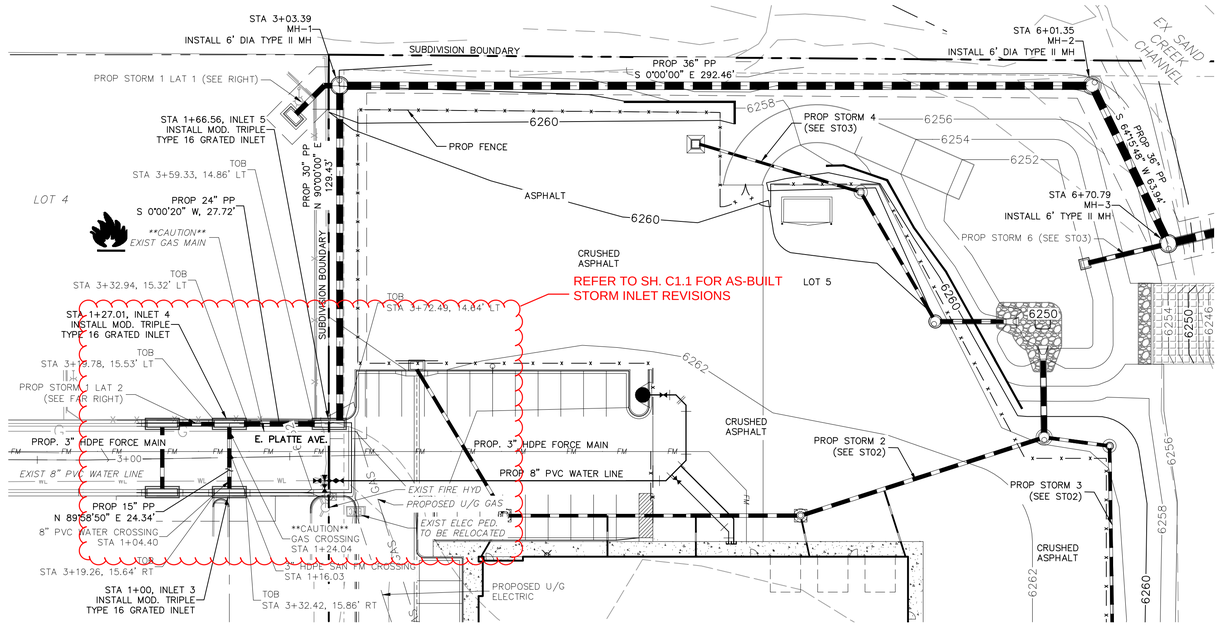

STORM 1
STA 0+99.84 TO STA 6+71.08

1" = 30'

0 15 30 60

Scale in Feet

ABBREVIATION LEGEND

C&G	CURB AND GUTTER
CL	CENTERLINE
CONST	CONSTRUCTION
EL	ELEVATION
EX	EXISTING
LT	LEFT
N	NORTH
NTS	NOT TO SCALE
PUB	PUBLIC
PVT	PRIVATE
PROP	PROPOSED
RT	RIGHT
S	SOUTH
SAN	SANITARY SEWER
SLV	SLEEVE
SRV	SERVICE
STA	STATION
STM	STORM SEWER
W	WEST
WTR	WATER

NOTE:

1. ALL STORM SEWER CINSTRUCTED WITH THESE PLANS SHALL BE CONSIDERED PRIVATE.
2. GAS LINE NOT LOCATED, LOCATION TO BE DETERIMED BY CONTRACTOR
3. REFER TO SHEET ST07 FOR TOB/TOG ELEVATIONS FOR INLETS 1-5

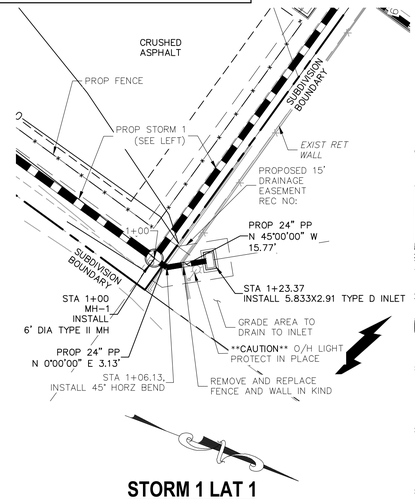

STORM 1 LAT 1
STA 1+00.00 TO STA 1+23.37

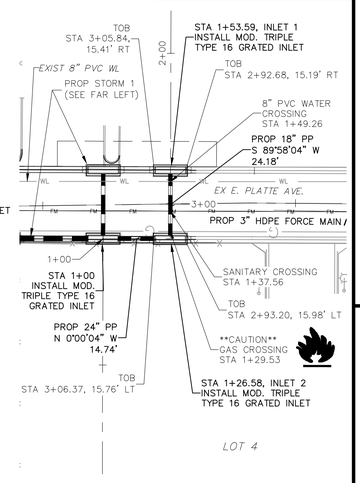

STORM 1 LAT 2
STA 1+00.00 TO STA 1+54.17

FOR LOCATING & MARKING GAS, ELECTRIC, WATER & TELEPHONE LINES

FOR BURIED UTILITY INFORMATION
48 HRS BEFORE YOU DIG
CALL 1-800-922-1987

CLEARWAY, LOT 5
STORM SEWER PLAN AND PROFILE

PROJECT NO. 44-042A | SCALE: HORIZONTAL: 1"=30' VERTICAL: 1"=3' | DATE: 06/13/2023 | SHEET 6 OF 16 | ST01

DESIGNED BY: DLM
DRAWN BY: CLP
CHECKED BY: DLM

212 N. WAHSATCH AVE. STE 305
COLORADO SPRINGS, CO 80903
PHONE: 719.955.5485

CIVIL CONSULTANTS, INC.

FOR AND ON BEHALF OF M&S CIVIL CONSULTANTS, INC.

VIRGIL A. SANCHEZ, COLORADO P.E. NO. 37160

STATE OF COLORADO
VIRGIL ANTHONY SANCHEZ
37160
PROFESSIONAL ENGINEER
06/14/2023

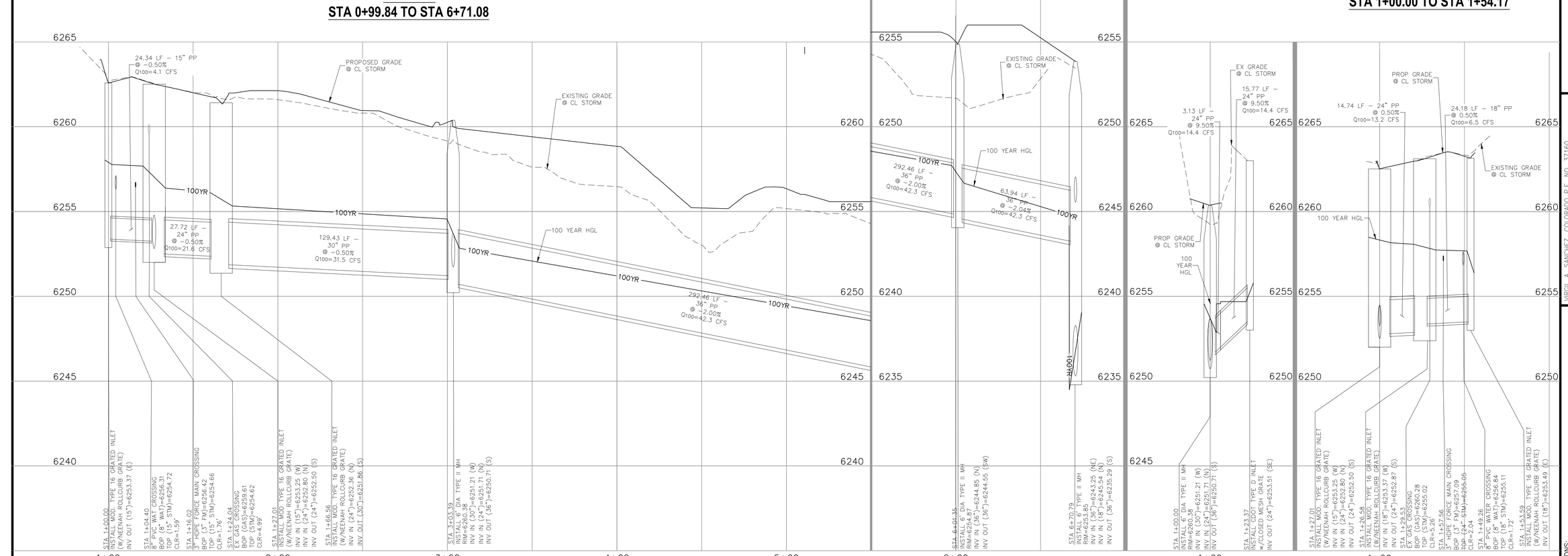

REVISIONS:

NO.	DATE:	BY:	DESCRIPTION:	APPR'D. BY:	DATE:

THE ENGINEER PREPARING THESE PLANS WILL NOT BE RESPONSIBLE, OR LIABLE FOR, UNAUTHORIZED CHANGES TO OR USES OF THESE PLANS. ALL CHANGES TO THE PLANS MUST BE IN WRITING AND MUST BE APPROVED BY THE PREPARER OF THESE PLANS.

CAUTION

File: O:\44042A-Wire Nut\Hammers\Dwg\Const Dwg\Storm\44042A-ST01.dwg Plotstamp: 6/14/2023 3:57 PM

ENGINEERING RECORD DRAWINGS

John P. Schwab Date: 10/6/26

JOHN P. SCHWAB, PE# 29891
FOR AND ON BEHALF OF JPS ENGINEERING, INC.

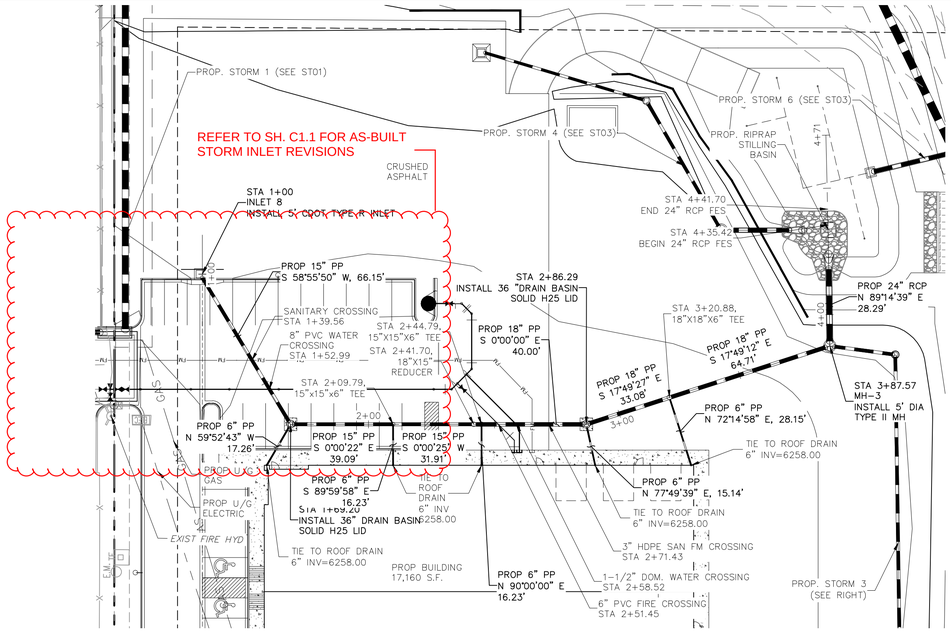

STORM 2
STA 1+00.00 TO STA 4+41.70

1" = 30'

0 15 30 60
Scale in Feet

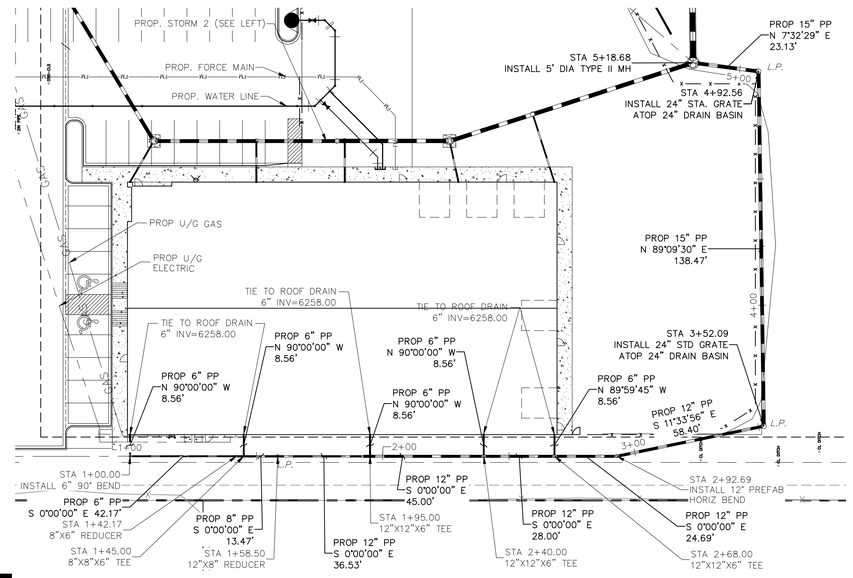

STORM 3
STA 1+00.00 TO STA 5+18.68

ABBREVIATION LEGEND

C&G	CURB AND GUTTER
CL	CENTERLINE
CONST	CONSTRUCTION
EL	ELEVATION
EX	EXISTING
LT	LEFT
N	NORTH
NTS	NOT TO SCALE
PUB	PUBLIC
PVT	PRIVATE
PROP	PROPOSED
RT	RIGHT
S	SOUTH
SAN	SANITARY SEWER
SLV	SLEEVE
SRV	SERVICE
STA	STATION
STM	STORM SEWER
W	WEST
WTR	WATER

NOTE:

1. ALL STORM SEWER CINSTRUCTED WITH THESE PLANS SHALL BE CONSIDERED PRIVATE.
2. GAS LINE NOT LOCATED, LOCATION TO BE DETERIMED BY CONTRACTOR

FOR LOCATING & MARKING GAS, ELECTRIC, WATER & TELEPHONE LINES
FOR BURIED UTILITY INFORMATION
48 HRS BEFORE YOU DIG
CALL 1-800-922-1987

CLEARWAY, LOT 5
STORM SEWER PLAN AND PROFILE

PROJECT NO. 44-042A | DATE: 06/13/2023 | SHEET 7 OF 16 | ST02
DESIGNED BY: DLM | DRAWN BY: CLP | CHECKED BY: DLM
SCALE: HORIZONTAL: 1"=30' VERTICAL: 1"=3'

212 N. WAHSATCH AVE. STE 305
COLORADO SPRINGS, CO 80903
PHONE: 719.955.5485
CIVIL CONSULTANTS, INC.

FOR AND ON BEHALF OF M&S CIVIL CONSULTANTS, INC.

VIRGIL A. SANCHEZ, COLORADO P.E. NO. 37160
37160 PROFESSIONAL ENGINEER
06/14/2023

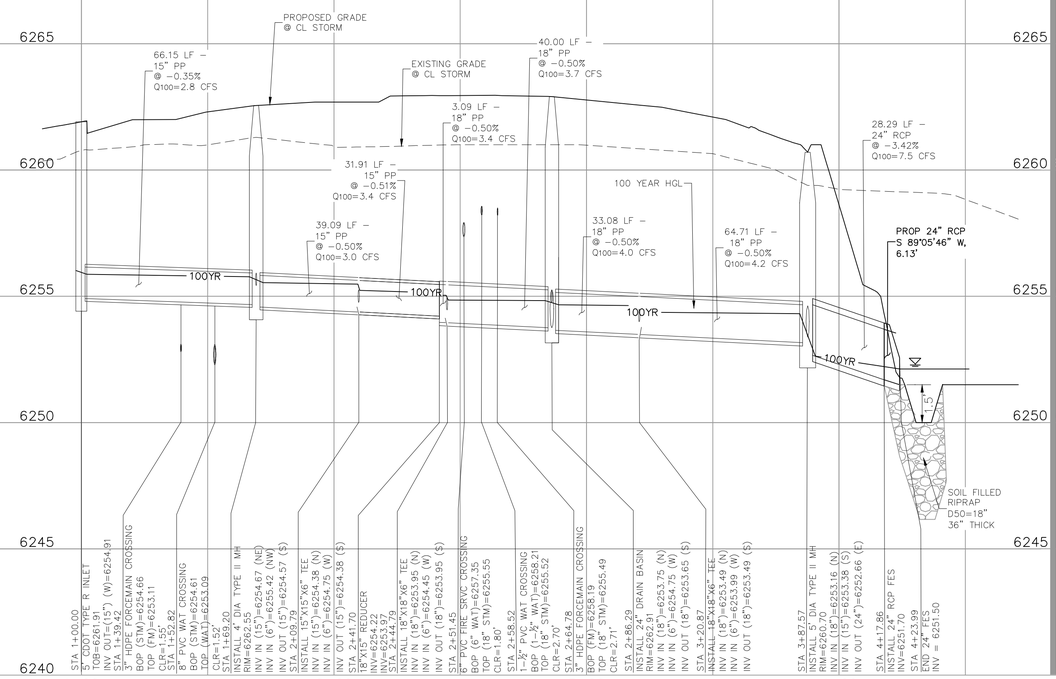

STORM 2

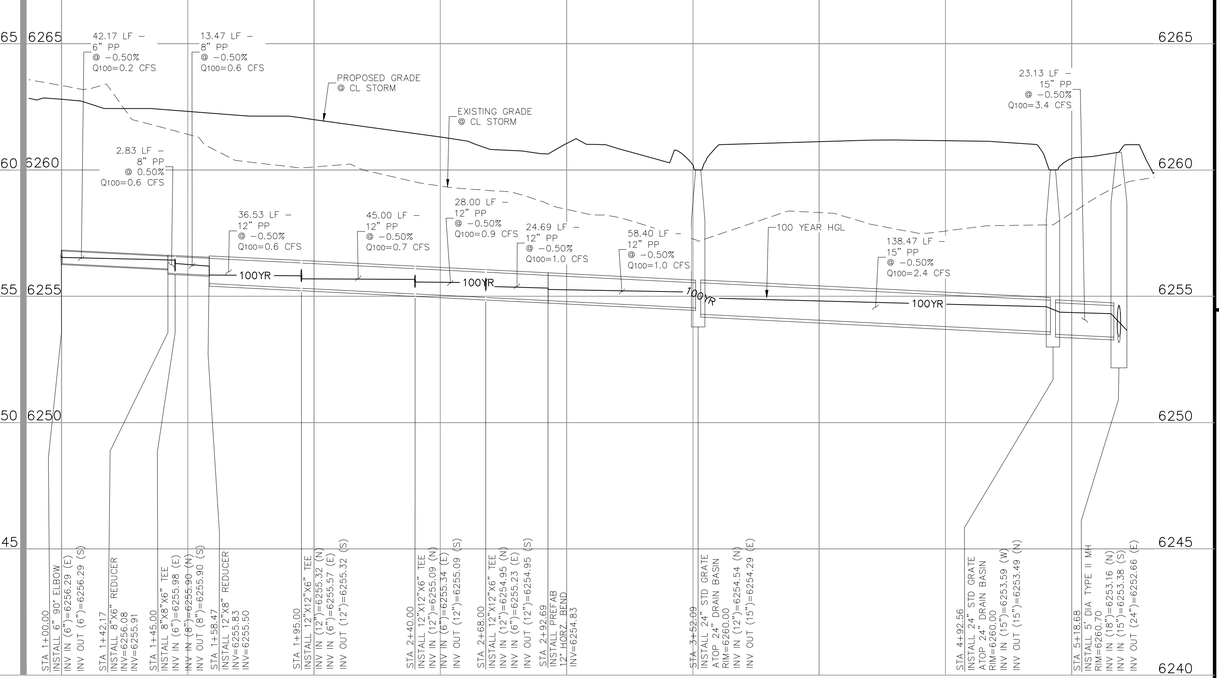

STORM 3

REVISIONS:			
NO.	DATE:	BY:	DESCRIPTION:

THE ENGINEER PREPARING THESE PLANS WILL NOT BE RESPONSIBLE, OR LIABLE FOR, UNAUTHORIZED CHANGES TO OR USES OF THESE PLANS. ALL CHANGES TO THE PLANS MUST BE IN WRITING AND MUST BE APPROVED BY THE PREPARER OF THESE PLANS.

CAUTION

APRVD. BY:	DATE:

File: O:\44042A-Wee Nut\Hammers\Dwg\Const Dwg\Storm\44042A-ST02.dwg Plotstamp: 6/14/2023 4:05 PM

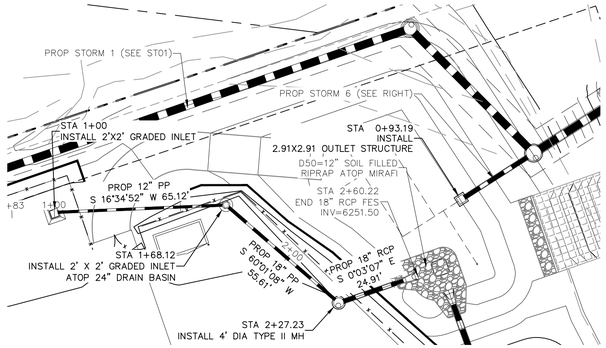

STORM 4
STA 1+00.00 TO STA 2+60.22

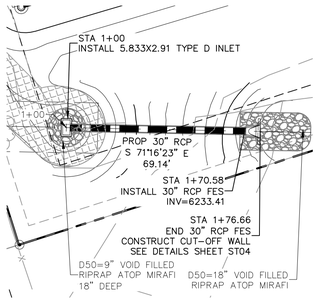

STORM 5
STA 1+00.00 TO STA 1+46.03

ABBREVIATION LEGEND

C&G	CURB AND GUTTER
CL	CENTERLINE
CONST	CONSTRUCTION
EL	ELEVATION
EX	EXISTING
LT	LEFT
N	NORTH
NTS	NOT TO SCALE
PUB	PUBLIC
PVT	PRIVATE
PROP	PROPOSED
RT	RIGHT
S	SOUTH
SAN	SANITARY SEWER
SLV	SLEEVE
SRV	SERVICE
STA	STATION
STM	STORM SEWER
W	WEST
WTR	WATER

NOTE:

1. ALL STORM SEWER CINSTRUCTED WITH THESE PLANS SHALL BE CONSIDERED PRIVATE.
2. GAS LINE NOT LOCATED, LOCATION TO BE DETERIMED BY CONTRACTOR

ENGINEERING RECORD DRAWINGS
John P. Schwab Date: 10/6/26
JOHN P. SCHWAB, PE# 29891
FOR AND ON BEHALF OF JPS ENGINEERING, INC.

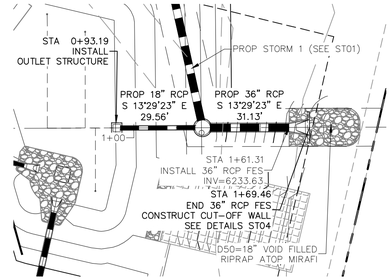

STORM 6
STA 0+93.19 TO STA 1+61.31

1" = 30'
0 15 30 60
Scale in Feet

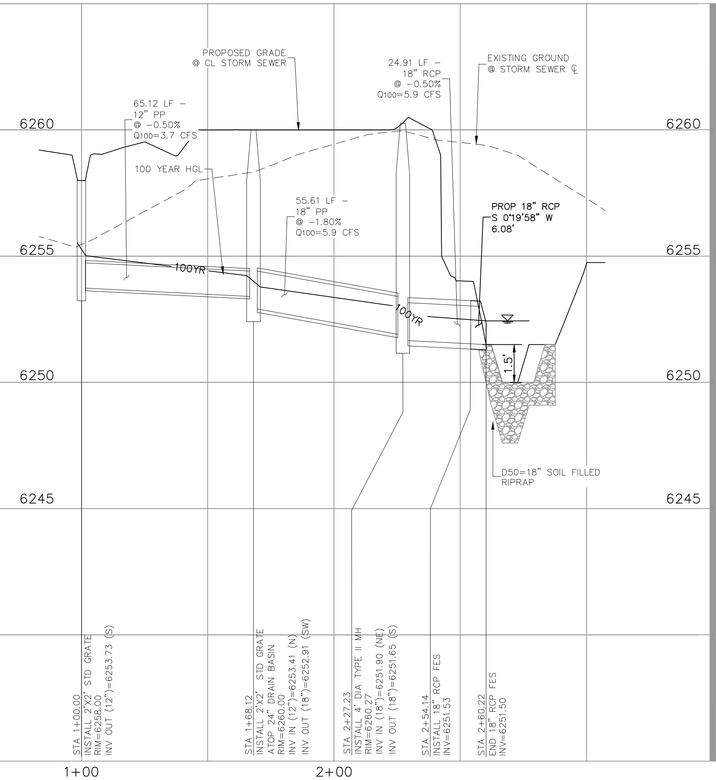

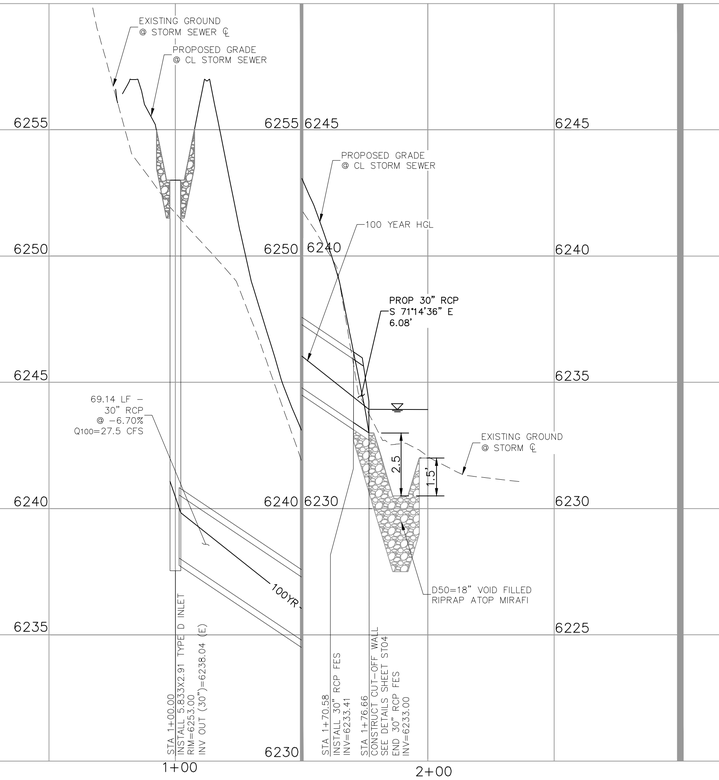

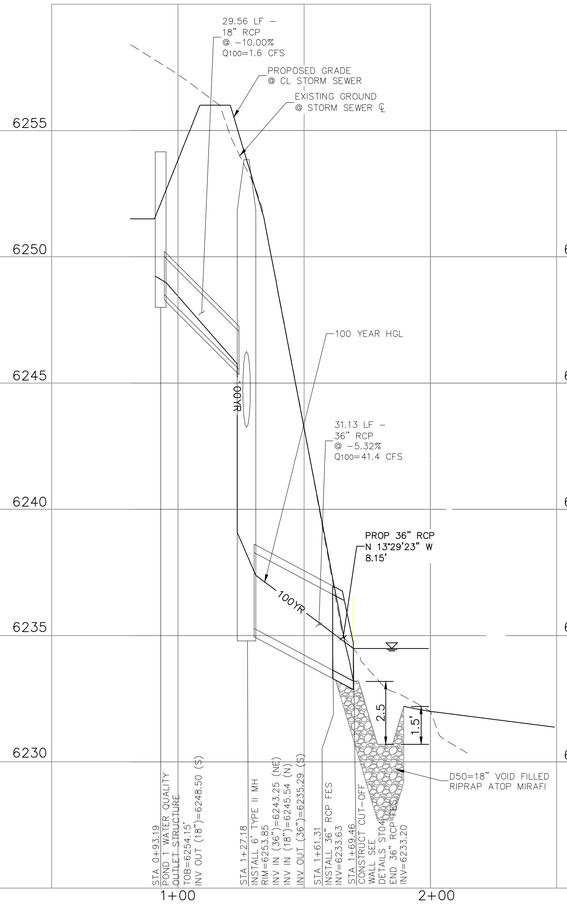

FOR LOCATING & MARKING GAS, ELECTRIC, WATER & TELEPHONE LINES
FOR BURIED UTILITY INFORMATION
48 HRS BEFORE YOU DIG
CALL 1-800-922-1987

CLEARWAY, LOT 5
STORM SEWER PLAN AND PROFILE

PROJECT NO. 44-042A | SCALE: HORIZONTAL: 1"=30' VERTICAL: 1"=3' | DATE: 06/13/2023 | SHEET 8 OF 16 | ST03

DESIGNED BY: DLM
DRAWN BY: CLP
CHECKED BY: DLM

212 N. WAHSATCH AVE. STE 305
COLORADO SPRINGS, CO 80903
PHONE: 719.955.5485
CIVIL CONSULTANTS, INC.

VIRGIL A. SANCHEZ, COLORADO P.E. NO. 37160
FOR AND ON BEHALF OF M&S CIVIL CONSULTANTS, INC.
COLORADO REGISTERED 37160 PROFESSIONAL ENGINEER
06/14/2023

REVISIONS:

NO.	DATE:	BY:	DESCRIPTION:	APPVD. BY:	DATE:

THE ENGINEER PREPARING THESE PLANS WILL NOT BE RESPONSIBLE, OR LIABLE FOR, UNAUTHORIZED CHANGES TO OR USES OF THESE PLANS. ALL CHANGES TO THE PLANS MUST BE IN WRITING AND MUST BE APPROVED BY THE PREPARER OF THESE PLANS.
CAUTION

File: O:\44042A-Wire Nut\Hammers\Dwg\Const Dwg\Storm\44042A-ST03.dwg Plotstamp: 6/14/2023 4:07 PM

STANDARD CONSTRUCTION NOTES:

1. ALL DRAINAGE AND ROADWAY CONSTRUCTION SHALL MEET THE STANDARDS AND SPECIFICATIONS OF THE CITY OF COLORADO SPRINGS/EL PASO COUNTY DRAINAGE CRITERIA MANUAL VOLUMES 1 AND 2, AND THE EL PASO COUNTY ENGINEERING CRITERIA MANUAL.
2. CONTRACTOR SHALL BE RESPONSIBLE FOR THE NOTIFICATION AND FIELD LOCATION OF ALL EXISTING UTILITIES, WHETHER SHOWN ON THE PLANS OR NOT, BEFORE BEGINNING CONSTRUCTION. LOCATION OF EXISTING UTILITIES SHALL BE VERIFIED BY THE CONTRACTOR PRIOR TO CONSTRUCTION. CALL 811 TO CONTACT THE UTILITY NOTIFICATION CENTER OF COLORADO (UNCC).
3. CONTRACTOR SHALL KEEP A COPY OF THESE APPROVED PLANS, THE GRADING AND EROSION CONTROL PLAN, THE STORMWATER MANAGEMENT PLAN (SWMP), THE SOILS AND GEOTECHNICAL REPORT AND THE APPROPRIATE DESIGN AND CONSTRUCTION STANDARDS AND SPECIFICATIONS AT THE JOB SITE AT ALL TIME INCLUDING THE FOLLOWING:
   - 3.1 EL PASO COUNTY ENGINEERING CRITERIA MANUAL (ECM)
   - 3.2 CITY OF COLORADO SPRINGS/EL PASO COUNTY ENGINEERING CRITERA MANUAL VOLUMES 1 AND 2.
   - 3.3 COLORADO DEPARTMENT OF TRANSPORTATION (CDOT) STANDARDS SPECIFICATION FOR ROAD AND BRIDGE CONSTRUCTION.
   - 3.4 CDOT M&S STANDARDS.
4. IT IS THE DESIGN ENGINEERS RESPONSIBILITY TO ACCURACY SHOW EXISTING CONDITION BOTH ONSITE AND OFFSITE ON THE CONSTRUCTION PLANS. ANY MODIFICATION NECESSARY DUE TO CONFLICT OMISSIONS OR CHANGED CONDITIONS WILL BE ENTIRELY THE DEVELOPERS RESPONSIBILITY TO RECTIFY.
5. IT IS THE CONTRACTORS RESPONSIBILITY TO UNDERSTAND THE REQUIREMENTS OF ALL JURISDICTIONAL AGENCIES AND TO OBTAIN ALL REQUIRED PERMITS, INCLUDING BUT NOT LIMITED TO EL PASO COUNTY EROSION AND STORM WATER QUALITY CONTROL PERMIT (ESQCP), REGIONAL BUILDING FLOODPLAIN DEVELOPMENT PERMIT, US ARMY CORPS OF ENGINEER ISSUED 401 AND/OR 404 PERMITS AND COUNTY AND STATE FUGITIVE DUST PERMITS.
6. ANY TEMPORARY SIGNAGE AND STRIPING SHALL COMPLY WITH EL PASO COUNTY DOW AND MUTCD CRITERIA.
7. CONTRACTOR SHALL OBTAIN ANY PERMITS REQUIRED BY EL PASO COUNTY DOT INCLUDING WORK WITHIN THE RIGHT-OF-WAY AND SPECIAL TRANSPORT PERMITS.
8. THE LIMITS OF CONSTRUCTION SHALL REMAIN WITHIN THE PROPERTY LINE UNLESS OTHERWISE NOTED. THE OWNER/DEVELOPER SHALL OBTAIN WRITTEN PERMISSION AND EASEMENTS, WHERE REQUIRED, FROM ADJOINING PROPERTY OWNER(S) PRIOR TO ANY OFFSITE DISTURBANCE GRADING, OR CONSTRUCTION.

STORM SEWER GENERAL NOTES

1. ALL STATIONING IS ALONG STORM SEWER CENTERLINE UNLESS OTHERWISE INDICATED. ALL ELEVATIONS ARE INVERT UNLESS OTHERWISE INDICATED.
2. ALL STORM SEWER BENDS AND WYES SHOWN ON THE PLAN SHALL BE PREFABRICATED.
3. HORIZONTAL AND VERTICAL BENDS ARE INDICATED ON THE PLANS.
4. JOINTS SHALL BE IN ACCORDANCE WITH ASTM C443 "STANDARD SPECIFICATIONS FOR JOINTS FOR CIRCULAR CONCRETE SEWER AND CULVERT PIPE USING RUBBER GASKET." IN NO CASE SHALL THE MAXIMUM JOINT OPENING FOR STRAIGHT ALIGNMENT EXCEED 1 INCH OR ONE AND ONE-HALF INCH ON CURVED ALIGNMENT.
5. INLET DIMENSIONS SHOWN ON PLANS REFER TO DISTANCES FROM INSIDE FACES OF BOX BETWEEN THE WIDTHS AND LENGTHS.
6. MANHOLE WIDTHS AND LENGTHS SHOWN ON PLAN REFER TO THE EXTERIOR WALL DIMENSIONS.
7. ALL REINFORCED CONCRETE PIPE STORM SEWER SHALL BE A MINIMUM OF CLASS III. ALL POLYPROPYLENE PIPE SHALL BE ADS N-12 DUAL WALL PIPE OR APPROVED EQUAL. SPECIFIC SEGMENTS OF STORM SEWER SHALL BE REQUIRED TO BE CONSTRUCTED OF A MINIMUM OF 5000 PSI CONCRETE DUE TO EXCESSIVE VELOCITIES. REFER TO ADDITIONAL NOTES WITHIN CONSTRUCTION PLANS.
8. SINCE ALL PIPE ENTRIES INTO THE BASE ARE VARIABLE, THE DIMENSIONS SHOWN ARE TYPICAL. ACTUAL DIMENSIONS AND QUANTITIES FOR CONCRETE AND REINFORCEMENT SHALL BE AS REQUIRED IN THE WORK.
9. THE MH RING (FRAME) SHALL BE SET IN A BED OF GROUT. THE FRAME SHALL BE SURROUNDED WITH A GROUT IN UNPAVED AREA, OR A CONCRETE COLLAR IN PAVED AREA.
10. PRECAST MANHOLES AND REINFORCEMENT SHALL CONFORM TO ASTM C 478 (AASHTO M 199).
11. CAST IN PLACE MANHOLES SHALL BE CLASS B CONCRETE.
12. STEPS SHALL BE REQUIRED WHEN THE MANHOLE DEPTH EXCEEDS 3'-6" AND SHALL BE IN ACCORDANCE WITH AASHTO M 199.
13. ALL REINFORCING STEEL SHALL HAVE A MINIMUM YIELD STRENGTH OF 60,000 PSI. VERTICAL STEEL SHALL BE PLACED AT ℄ OF WALL. ALL BARS SHALL HAVE A 2" MINIMUM CLEARANCE.
14. FLOW CHANNELS AND INVERTS SHALL BE FORMED BY SHAPING WITH CLASS B CONCRETE OR APPROVED GROUT.
15. STUB-OUTS SHALL EXTEND 4 FT MINIMUM BEYOND OUTSIDE WALL SURFACE OF MANHOLE AND BE SATISFACTORILY PLUGGED.
16. CHECK WITH THE LOCAL GOVERNMENT AUTHORITY FOR ANY ADDITIONAL STORM SEWER SPECIFICATIONS, DETAILS, OR REGULATIONS.
17. THE SLOPE OF THE MANHOLE COVER SHALL MATCH THE ROADWAY PROFILE AND CROSS SLOPE.
18. THE CONTRACTOR SHALL PROVIDE SHOP DRAWINGS OF ALL PREFABRICATED STRUCTURES TO THE ENGINEER FOR REVIEW PRIOR TO INSTALLATION.

SOIL RIPRAP NOTES:

1. THE SOIL MATERIAL SHALL BE NATIVE OR TOPSOIL AND MIXED WITH SIXTY FIVE PERCENT (65%) RIPRAP AND THIRTY FIVE PERCENT (35%) SOIL BY VOLUME.
2. SOIL RIPRAP SHALL CONSIST OF A UNIFORM MIXTURE OF SOIL AND RIPRAP WITHOUT VOIDS.
3. CONTRACTOR SHALL COOPERATE WITH ENGINEER IN OBTAINING AND PROVIDED SAMPLES OF ALL SPECIFIED MATERIALS.
4. CONTRACTOR SHALL SUBMIT CERTIFIED LABORATORY TEST CERTIFICATES FOR ALL ITEMS REQUIRED FOR SOIL RIPRAP.
5. RIPRAP USED SHALL BE THE TYPE DESIGNATED ON THE DRAWINGS AND SHALL CONFORM TO TABLE SHOWN ON SHEET BMP03.
6. THE RIPRAP DESIGNATION AND TOTAL THICKNESS OF RIPRAP SHALL BE AS SHOWN ON THE DRAWINGS. THE MAXIMUM STONE SIZE SHALL NOT LARGER THAN THE THICKNESS OF THE RIPRAP.
7. NEITHER WIDTH NOR THICKNESS OF A SINGLE STONE OF RIPRAP SHALL BE LESS THAN ONE-THIRD (⅓) OF ITS LENGTH.
8. THE SPECIFIC GRAVITY OF THE RIPRAP SHALL BE TWO AND ONE-HALF (2.5) OR GREATER.
9. MINIMUM DENSITY FOR ACCEPTABLE RIPRAP SHALL BE ONE HUNDRED AND SIXTY FIVE (165) POUNDS PER CUBIC FOOT.
10. RIPRAP SPECIFIC GRAVITY SHALL BE ACCORDING TO THE BULK-SATURATED, SURFACE-DRY BASIS, IN ACCORDANCE WITH AASHTO T85.
11. BROKEN CONCRETE OR ASPHALT PAVEMENT SHALL NOT BE ACCEPTABLE FOR USE IN THE WORK.
12. ROUNDED RIPRAP (RIVER ROCK) IS NOT ACCEPTABLE, UNLESS SPECIFICALLY DESIGNATED ON THE DRAWINGS.

STRUCTURAL CONCRETE NOTES:

1. ALL CONSTRUCTION INVOLVING THE PLACEMENT OF STRUCTURAL CONCRETE SHALL BE COMPLETED IN ACCORDANCE WITH STANDARD SPECIFICATIONS, AND AS SUPPLEMENTED BY THE COLORADO DEPARTMENT OF TRANSPORTATION STANDARD SPECIFICATIONS FOR ROADWAY AND BRIDGE CONSTRUCTION.
2. STEEL REINFORCING SHALL BE GRADE 60 FOR ALL REINFORCING STEEL GREATER THAN #4. SPLICING, LAP SPLICING SHALL BE MINIMUM IN THE FOLLOWING TABLE UNLESS OTHERWISE SPECIFIED:

BAR SIZE	#4	#5	#6	#7	#8
SPLICE LENGTH	1'-9"	2'-2"	2'-7"	3'-4"	4'-3"

   ALL REINFORCING SHALL HAVE A 2-INCH MINIMUM COVER UNLESS OTHERWISE SPECIFIED. ALL REINFORCED STEEL TO BE EPOXY COATED.
3. CAST-IN-PLACE CONCRETE SHALL HAVE A MINIMUM COMPRESSIVE STRENGTH (fc) OF 4,000 PSI AT 28 DAYS. ALL CONCRETE PLACED AGAINST SOIL SHALL BE TYPE II PORTLAND CEMENT. ALL EXPOSED CORNERS SHALL BE FORMED WITH A 3/4" CHAMFER UNLESS OTHERWISE SPECIFIED.
4. EXPANSION JOINT MATERIAL SHALL MEET AASHTO SPECIFICATION M-213.
5. BACKFILL AGAINST STRUCTURES SHALL NOT COMMENCE UNTIL ALL SUPPORTING DIAPHRAGMS ARE IN PLACE AND CONCRETE HAS OBTAINED ITS FULL SEVEN DAY STRENGTH. BACKFILL SHALL BE PLACED EQUALLY ON EACH SIDE OF RETAINING WALL STRUCTURES AND CUTOFF WALLS UNTIL THE FINAL GRADE IS REACHED.
6. FOOTING EXCAVATIONS SHALL BE EXAMINED BY THE GEOTECHNICAL ENGINEER WITH A 24-HOUR MINIMUM NOTIFICATION FOR SOIL AND/OR CONCRETE TESTING. PLACEMENT OF CONCRETE IN THE ABSENCE OF TESTING SHALL BE COMPLETED AT THE SOLE RISK OF THE CONTRACTOR.
7. PRIOR TO THE PLACEMENT OF CONCRETE IN AREAS WHERE SOIL IS PRESENT, THE SOIL SHALL BE SCARIFIED TO A MINIMUM DEPTH OF 6-INCHES. THE MOISTURE CONTENT SHALL BE ADJUSTED TO WITHIN PLUS OR MINUS 2 PERCENT OF THE OPTIMUM MOISTURE CONTENT AND RECOMPACTED TO AT LEAST 95 PERCENT RELATIVE COMPACTION (AASHTO-T-180).

ABBREVIATIONS
EC -- EPOXY COATED O.F. -- OUTSIDE FACE E.F. -- EACH FACE E.W. -- EACH WAY I.F. -- INSIDE FACE N.F. -- NEAR FACE
T.O.C. -- TOP OF CONCRETE B.O.C. -- BOTTOM OF CONCRETE CONT. -- CONTINUOUS

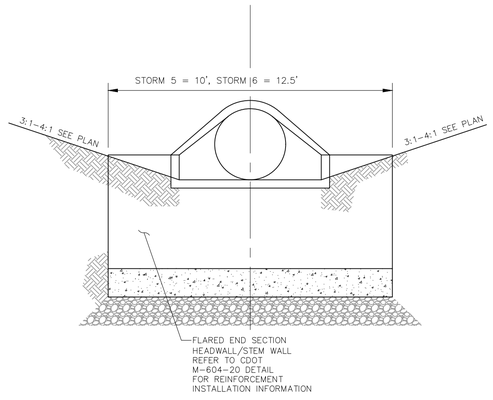

STORM 5, 6 - OUTFALLS RIPRAP APRON W/HEADWALL ELEVATION (TYP.)

NOT TO SCALE

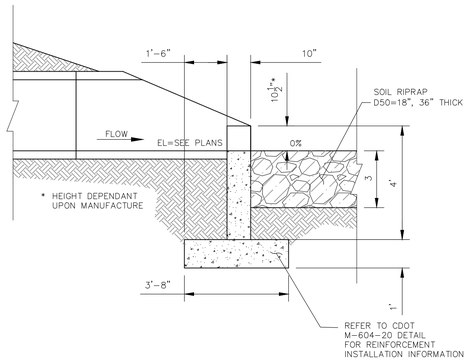

STORM 5,6 - OUTFALL RIPRAP APRON W/HEADWALL SECTION (TYP.)

NOT TO SCALE

ENGINEERING RECORD DRAWINGS

John P. Schwab Date: 10/6/26

JOHN P. SCHWAB, PE# 29891
FOR AND ON BEHALF OF JPS ENGINEERING, INC.

FOR LOCATING & MARKING GAS, ELECTRIC, WATER & TELEPHONE LINES

FOR BURIED UTILITY INFORMATION
48 HRS BEFORE YOU DIG
CALL 1-800-922-1987

CLEARWAY, LOT 5

STORM SEWER NOTES AND DETAILS

PROJECT NO. 44-042A | SCALE: HORIZONTAL: N/A VERTICAL: N/A | DATE: 06/13/2023 | SHEET 9 OF 16 | ST04

DESIGNED BY: DLM
DRAWN BY: CLP
CHECKED BY: DLM

212 N. WAHSATCH AVE. STE 305
COLORADO SPRINGS, CO 80903
PHONE: 719.955.5485

CIVIL CONSULTANTS, INC.

VIRGIL A. SANCHEZ, COLORADO P.E. NO. 37160

FOR AND ON BEHALF OF M&S CIVIL CONSULTANTS, INC.

COLORADO REGISTERED PROFESSIONAL ENGINEER 37160 06/14/2023

REVISIONS:

NO.	DATE:	BY:	DESCRIPTION:	APPR'D. BY:	DATE:

THE ENGINEER PREPARING THESE PLANS WILL NOT BE RESPONSIBLE OR LIABLE FOR UNAUTHORIZED CHANGES TO OR USES OF THESE PLANS. ALL CHANGES TO THE PLANS MUST BE IN WRITING AND MUST BE APPROVED BY THE PREPARER OF THESE PLANS.

CAUTION

File: O:\44042A-Wire Nut Hammers\Dwg\Const Dwg\Storm\44042A-ST04.dwg Plotstamp: 6/14/2023 3:37 PM

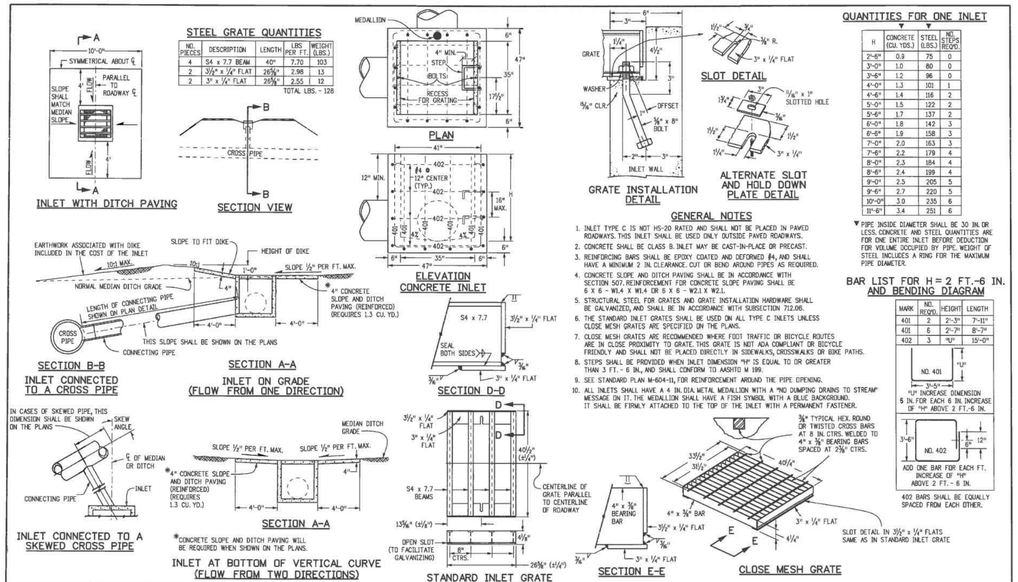

Computer File Information		Sheet Revisions	
Creation Date: 07/04/12	Initials: DD	Date:	Comments
Last Modification Date: 07/04/12	Initials: LTA		
Full Path: www.coloradodot.info/business/designsupport			
Drawing File Name: 604010101.dgn			
CAD Ver.: MicroStation V8 Scale: Not to Scale Units: English			

Colorado Department of Transportation
4201 East Arkansas Avenue
Denver, Colorado 80222
Phone: (303) 757-9083
Fax: (303) 757-9820
Project Development Branch DD/LTA

INLET, TYPE C

STANDARD PLAN NO. M-604-10
Sheet No. 1 of 1
Issued By: Project Development Branch July 4, 2012

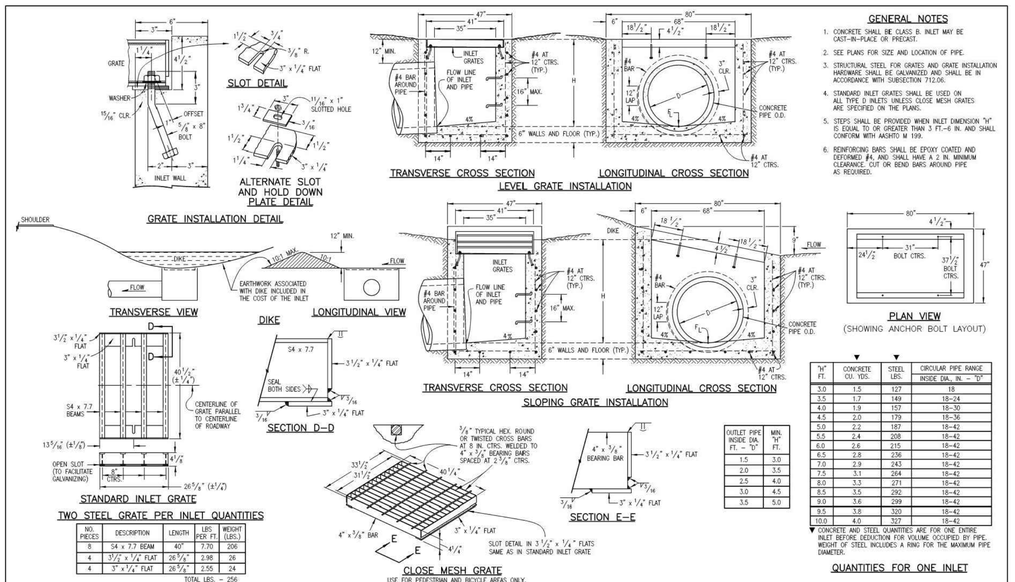

Computer File Information		Sheet Revisions	
Creation Date: 07/04/06	Initials: SJR	Date:	Comments
Last Modification Date: 07/04/06	Initials: LTA		
Full Path: www.dot.state.co.us/DesignSupport/			
Drawing File Name: 604010101.dwg			
CAD Ver.: MicroStation V8 Scale: Not to Scale Units: English			

Colorado Department of Transportation
4201 East Arkansas Avenue
Denver, Colorado 80222
Phone: (303) 757-9083
Fax: (303) 757-9820
Project Development Branch SRJ/LTA

INLET, TYPE D

STANDARD PLAN NO. M-604-11
Sheet No. 1 of 1
Issued By: Project Development Branch on July 04, 2006

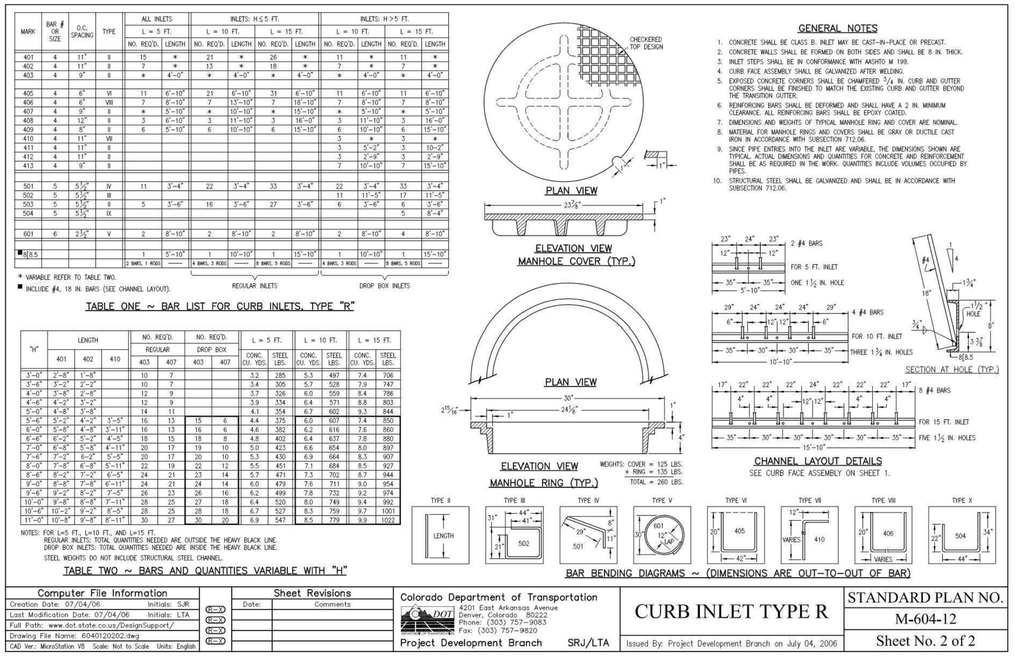

Computer File Information		Sheet Revisions	
Creation Date: 07/04/06	Initials: SJR	Date:	Comments
Last Modification Date: 07/04/06	Initials: LTA		
Full Path: www.dot.state.co.us/DesignSupport/			
Drawing File Name: 604010202.dwg			
CAD Ver.: MicroStation V8 Scale: Not to Scale Units: English			

Colorado Department of Transportation
4201 East Arkansas Avenue
Denver, Colorado 80222
Phone: (303) 757-9083
Fax: (303) 757-9820
Project Development Branch SRJ/LTA

CURB INLET TYPE R

STANDARD PLAN NO. M-604-12
Sheet No. 2 of 2
Issued By: Project Development Branch on July 04, 2006

ENGINEERING RECORD DRAWINGS
John P. Schwab Date: 10/6/26
JOHN P. SCHWAB, PE# 29891
FOR AND ON BEHALF OF JPS ENGINEERING, INC.

EL PASO COUNTY FILE NO. PCD # PPR-22-034

CLEARWAY, LOT 5
STORM SEWER DETAILS
PROJECT NO. 44-042A | SCALE: HORIZONTAL: N/A VERTICAL: N/A | DATE: 06/13/2023 | SHEET 10 OF 16 | ST05
DESIGNED BY: DLM
DRAWN BY: CLP
CHECKED BY: DLM

212 N. WAHSATCH AVE. STE 305
COLORADO SPRINGS, CO 80903
PHONE: 719.955.5485
CIVIL CONSULTANTS, INC.

FOR AND ON BEHALF OF M&S CIVIL CONSULTANTS, INC.
VIRGIL A. SANCHEZ, COLORADO P.E. NO. 37160
37160 COLORADO REGISTERED PROFESSIONAL ENGINEER
06/14/2023

FOR LOCATING & MARKING GAS, ELECTRIC, WATER & TELEPHONE LINES
FOR BURIED UTILITY INFORMATION
48 HRS BEFORE YOU DIG
CALL 1-800-922-1987

REVISIONS:
NO. | DATE: | BY: | DESCRIPTION: | APPR'D. BY: | DATE:

THE ENGINEER PREPARING THESE PLANS WILL NOT BE RESPONSIBLE, OR LIABLE FOR, UNAUTHORIZED CHANGES TO OR USES OF THESE PLANS. ALL CHANGES TO THE PLANS MUST BE IN WRITING AND MUST BE APPROVED BY THE PREPARER OF THESE PLANS.
CAUTION

File: O:\44042A-Wire Nut\Hammers\Dwg\Const Dwg\Storm\44042A-ST05.dwg Plotstamp: 6/14/2023 4:09 PM

ENGINEERING RECORD DRAWINGS

John P. Schwab Date: 10/6/26

JOHN P. SCHWAB, PE# 29891
FOR AND ON BEHALF OF JPS ENGINEERING, INC.

HP STORM TRENCH INSTALLATION DETAIL (ALTERNATE)

TABLE 1, RECOMMENDED MINIMUM TRENCH WIDTHS

PIPE DIAM.	MIN TRENCH WIDTH
12" (300mm)	30" (750mm)
15" (375mm)	34" (860mm)
18" (450mm)	39" (990mm)
24" (600mm)	48" (1200mm)
30" (750mm)	56" (1420mm)
36" (900mm)	64" (1620mm)
42" (1050mm)	72" (1800mm)
48" (1200mm)	80" (2030mm)
60" (1500mm)	96" (2440mm)

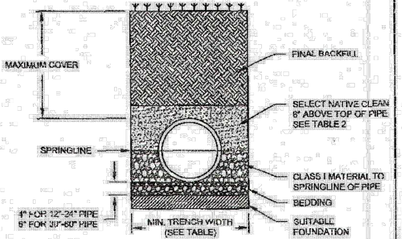

NOTES:

1. MEASURES SHOULD BE TAKEN TO PREVENT MIGRATION OF NATIVE FINES INTO BACKFILL MATERIAL, WHEN REQUIRED.
2. SOIL CLASSIFICATIONS ARE PER THE LATEST VERSION OF ASTM D2321. CLASS IVB MATERIALS (MH, CH) AS DEFINED IN PREVIOUS VERSIONS OF ASTM D2321 ARE NOT APPROPRIATE BACKFILL MATERIALS.
3. FOUNDATION: WHERE THE TRENCH BOTTOM IS UNSTABLE, THE CONTRACTOR SHALL EXCAVATE TO A DEPTH REQUIRED BY THE ENGINEER AND REPLACE WITH SUITABLE MATERIAL AS SPECIFIED BY THE ENGINEER. AS AN ALTERNATIVE AND AT THE DISCRETION OF THE DESIGN ENGINEER, THE TRENCH BOTTOM MAY BE STABILIZED USING A GEOTEXTILE MATERIAL.
4. BEDDING: SUITABLE MATERIAL SHALL BE CLASS I. THE CONTRACTOR SHALL PROVIDE DOCUMENTATION FOR MATERIAL SPECIFICATION TO ENGINEER. UNLESS OTHERWISE NOTED BY THE ENGINEER, MINIMUM BEDDING THICKNESS SHALL BE 4" (100mm) FOR 4"-24" (100mm-600mm); 6" (150mm) FOR 30"-60" (750mm-900mm).
5. BACKFILL: FOR PIPES OUTSIDE OF PAVEMENT CLASS I MATERIAL TO BE USED FOR BACKFILL UP TO THE SPRINGLINE OF PIPE. THE CONTRACTOR SHALL PROVIDE DOCUMENTATION FOR MATERIAL SPECIFICATION TO ENGINEER. UNLESS OTHERWISE NOTED BY THE ENGINEER, CLASS I MATERIAL MUST BE COMPACTED IN 6" (200mm) LIFTS.
6. MINIMUM COVER: MINIMUM COVER, H, IN NON-TRAFFIC APPLICATIONS (GRASS OR LANDSCAPE AREAS IS 12" (300mm) FROM THE TOP OF PIPE TO GROUND SURFACE. ADDITIONAL COVER MAY BE REQUIRED TO PREVENT FLOTATION.
7. SELECT NATIVE CLEAN BACKFILL SHALL BE WELL PLACED, MODERATELY COMPACTED (85% SPD) CLASS IV OR BETTER PER ASTM D2321 WITH NO FOREIGN DEBRIS INCLUDING ROCKS, LARGE CLUMPS ORGANIC MATERIAL, OR FROZEN MATERIAL.
8. HP ALTERNATE STORM TRENCH DETAIL MUST BE APPROVED BY DESIGN ENGINEER. DETAIL DOES NOT SUPERSEDE ADS STANDARD DETAIL STD-108.

TABLE 2, MAXIMUM COVER FOR ADS HP STORM PIPE, ALTERNATE INSTALLATION, ft (γs=120)

PIPE DIAM.	SELECT NATIVE CLEAN MATERIAL CLASSIFICATION		
	CLASS II	CLASS III	CLASS IV
12" (300mm)	17 (5.2m)	14 (4.3m)	11 (3.4m)
15" (375mm)	17 (5.2m)	14 (4.3m)	10 (3.0m)
18" (450mm)	16 (4.9m)	13 (4.0m)	10 (3.0m)
24" (600mm)	14 (4.3m)	12 (3.7m)	9 (2.7m)
30" (750mm)	13 (4.0m)	12 (3.7m)	8 (2.4m)
36" (900mm)	11 (3.4m)	11 (3.4m)	7 (2.1m)
42" (1050mm)	11 (3.4m)	11 (3.4m)	7 (2.1m)
48" (1200mm)	11 (3.4m)	10 (3.0m)	6 (1.8m)
60" (1500mm)	11 (3.4m)	10 (3.0m)	6 (1.8m)

FILL HEIGHT TABLE GENERATED ASSUMING DRY CONDITIONS, OUTSIDE OF WATER TABLE. FOR INSTALLATION WITHIN THE WATER TABLE, CONTACT APPLICATIONS ENGINEERING.

©2007 ADS, INC.
ADVANCED DRAINAGE SYSTEMS, INC. ("ADS") HAS PROVIDED THIS DETAIL BASED ON INFORMATION PROVIDED TO ADS. THIS DRAWING IS INTENDED TO DEPICT THE COMPONENTS AS REQUESTED. ADS HAS NOT PERFORMED ANY ENGINEERING OR DESIGN SERVICES FOR THIS PROJECT. NOR HAS ADS INDEPENDENTLY VERIFIED THE INFORMATION SUPPLIED. THE INSTALLATION DETAILS PROVIDED HEREIN ARE GENERAL RECOMMENDATIONS AND ARE NOT SPECIFIC FOR THIS PROJECT. THE DESIGN ENGINEER SHALL REVIEW THESE DETAILS PRIOR TO CONSTRUCTION. IT IS THE DESIGN ENGINEERS RESPONSIBILITY TO ENSURE THE DETAILS PROVIDED HEREIN MEETS OR EXCEEDS THE APPLICABLE NATIONAL, STATE, OR LOCAL REQUIREMENTS AND TO ENSURE THAT THE DETAILS PROVIDED HEREIN ARE ACCEPTABLE FOR THIS PROJECT.

REV.	DESCRIPTION	BY	DATE
4	CLASS I COMPACTION	CMP	02/03/2015

ALTERNATE STORM TRENCH DETAIL HP STORM OUTSIDE OF PAVEMENT

DRAWING NUMBER: STD-109

ADVANCED DRAINAGE SYSTEMS, INC. 4640 TRUEMAN BLVD HILLIARD, OHIO 43026

DRAWN BY: JAB | DATE: 01/28/08 | SCALE: NTS | SHEET: 1 OF 1

N-12 HP STORM TRENCH INSTALLATION DETAIL

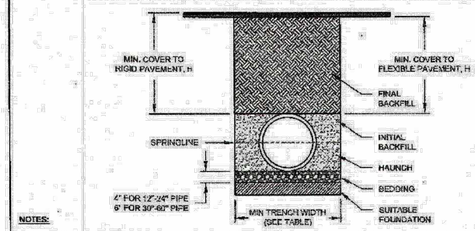

TABLE 1, RECOMMENDED MINIMUM TRENCH WIDTHS

PIPE DIAM.	MIN TRENCH WIDTH
12" (300mm)	30" (750mm)
15" (375mm)	34" (860mm)
18" (450mm)	39" (990mm)
24" (600mm)	48" (1200mm)
30" (750mm)	56" (1420mm)
36" (900mm)	64" (1620mm)
42" (1050mm)	72" (1830mm)
48" (1200mm)	80" (2030mm)
60" (1500mm)	96" (2440mm)

TABLE 2, MINIMUM RECOMMENDED COVER BASED ON VEHICLE LOADING CONDITIONS

PIPE DIAM.	SURFACE LIVE LOADING CONDITION	
	H-25	HEAVY CONSTRUCTION (75T AXLE LOAD) *
12" - 48" (300mm - 1200mm)	12" (300mm)	48" (1200mm)
60" (1500mm)	24" (600mm)	60" (1500mm)

* VEHICLES IN EXCESS OF 75T MAY REQUIRE ADDITIONAL COVER

NOTES:

1. ALL PIPE SYSTEMS SHALL BE INSTALLED IN ACCORDANCE WITH ASTM D2321, "STANDARD PRACTICE FOR UNDERGROUND INSTALLATION OF THERMOPLASTIC PIPE FOR SEWERS AND OTHER GRAVITY FLOW APPLICATIONS", LATEST ADDITION, WITH THE EXCEPTION THAT THE INITIAL BACKFILL MAY EXTEND TO "HE CROWN OF THE PIPE. SOIL CLASSIFICATIONS ARE PER THE LATEST VERSION OF ASTM D2321. CLASS IVB MATERIALS (MH, CH) AS DEFINED IN PREVIOUS VERSIONS OF ASTM D2321 ARE NOT APPROPRIATE BACKFILL MATERIALS.
2. MEASURES SHOULD BE TAKEN TO PREVENT MIGRATION OF NATIVE FINES INTO BACKFILL MATERIAL, WHEN REQUIRED.
3. FOUNDATION: WHERE THE TRENCH BOTTOM IS UNSTABLE, THE CONTRACTOR SHALL EXCAVATE TO A DEPTH REQUIRED BY THE ENGINEER AND REPLACE WITH SUITABLE MATERIAL AS SPECIFIED BY THE ENGINEER. AS AN ALTERNATIVE AND AT THE DISCRETION OF THE DESIGN ENGINEER, THE TRENCH BOTTOM MAY BE STABILIZED USING A GEOTEXTILE MATERIAL.
4. BEDDING: SUITABLE MATERIAL SHALL BE CLASS I, II, III, OR IV. THE CONTRACTOR SHALL PROVIDE DOCUMENTATION FOR MATERIAL SPECIFICATION TO ENGINEER. COMPACTION SHALL BE SPECIFIED BY THE ENGINEER IN ACCORDANCE WITH TABLE 3 FOR THE APPLICABLE F LL HEIGHTS LISTED. UNLESS O I HERWISE NOTED BY THE ENGINEER, MINIMUM BEDDING THICKNESS SHALL BE 4" (100mm) FOR 12"-24" (300mm-600mm) DIAMETER PIPE; 6" (150mm) FOR 30"-60" (750mm-900mm) DIAMETER PIPE. THE MIDDLE 1/3 BENEATH THE PIPE INVERT SHALL BE LOOSELY PLACED. PLEASE NOTE, CLASS IV MATERIAL HAS LIMITED APPLICATION AND CAN BE DIFFICULT TO PLACE AND COMPACT; USE ONLY WITH THE APPROVAL OF A SOIL EXPERT.
5. INITIAL BACKFILL: SUITABLE MATERIAL SHALL BE CLASS I, II, III, OR IV IN THE PIPE ZONE EXTENDING TO THE CROWN OF THE PIPE. THE CONTRACTOR SHALL PROVIDE DOCUMENTATION FOR MATERIAL SPECIFICATION TO ENGINEER. MATERIAL SHALL BE INSTALLED AS REQUIRED IN ASTM D2321, LATEST EDITION. COMPACTION SHALL BE SPECIFIED BY THE ENGINEER IN ACCORDANCE WITH TABLE 3 FOR THE APPLICABLE FILL HEIGHTS LISTED. PLEASE NOTE, CLASS IV MATERIAL HAS LIMITED APPLICATION AND CAN BE DIFFICULT TO PLACE AND COMPACT; USE ONLY WITH THE APPROVAL OF A SOIL EXPERT.
6. MINIMUM COVER: MINIMUM COVER, H, IN NON-TRAFFIC APPLICATIONS (GRASS OR LANDSCAPE AREAS) IS 12" (300mm) FROM THE TOP OF PIPE TO GROUND SURFACE. ADDITIONAL COVER MAY BE REQUIRED TO PREVENT FLOTATION. FOR TRAFFIC APPLICATIONS; CLASS I OR II MATERIAL COMPACTED TO 95% SPD AND CLASS III COMPACTED TO 95% SPD IS REQUIRED. FOR TRAFFIC APPLICATIONS; MINIMUM COVER, H, IS 12" (300mm) UP TO 48" (1200mm) DIAMETER PIPE AND 24" (600mm) OF COVER FOR 60" (1500mm) DIAMETER PIPE, MEASURED FROM TOP OF PIPE TO BOTTOM OF FLEXIBLE PAVEMENT OR TO TOP OF RIGID PAVEMENT. CLASS IV MATERIALS ARE NOT RECOMMENDEDAS BACKFILL FOR TRAFFIC APPLICATION WITH LESS THAN 72" (1830mm) OF COVEH MEASURED I ROM TOP OF PIPE TO TOP OF SURFACE.

TABLE 3, MAXIMUM COVER FOR ADS N-12 HP PIPE, ft

PIPE DIA	CLASS I COMPACTED	CLASS II 65%	CLASS II 90%	CLASS II 85%	CLASS III 95%	CLASS III 90%	CLASS III 85%	CLASS IV 85%
12" (300mm)	39 (11.9m)	27 (8.2m)	20 (6.1m)	15 (4.6m)	21 (6.4m)	16 (4.9m)	14 (4.3m)	13 (4.0m)
15" (375mm)	42 (12.8m)	26 (8.8m)	21 (6.4m)	16 (4.9m)	22 (6.7m)	17 (5.2m)	14 (4.6m)	14 (4.3m)
18" (450mm)	36 (11.0m)	25 (7.6m)	18 (5.5m)	13 (4.0m)	19 (5.8m)	14 (4.3m)	13 (4.0m)	12 (3.7m)
24" (600mm)	31 (9.4m)	22 (6.7m)	16 (4.9m)	11 (3.4m)	16 (4.9m)	12 (3.7m)	11 (3.4m)	10 (3.0m)
30" (750mm)	36 (11.0m)	25 (7.6m)	18 (5.5m)	13 (4.0m)	19 (5.8m)	14 (4.3m)	13 (4.0m)	12 (3.7m)
36" (900mm)	32 (9.8m)	23 (7.0m)	16 (4.9m)	11 (3.4m)	16 (4.9m)	12 (3.7m)	11 (3.4m)	10 (3.0m)
42" (1050mm)	37 (11.3m)	25 (7.6m)	18 (5.5m)	13 (4.0m)	18 (5.5m)	13 (4.0m)	12 (3.7m)	9 (2.7m)
48" (1200mm)	35 (10.7m)	24 (7.3m)	17 (5.2m)	12 (3.7m)	17 (5.2m)	12 (4.0m)	11 (3.4m)	9 (2.7m)
60" (1500mm)	37 (11.3m)	25 (7.6m)	17 (5.2m)	12 (3.7m)	18 (5.5m)	13 (4.0m)	11 (3.4m)	7 (2.1m)

FILL HEIGHT TABLE GENERATED USING AASHTO SECTION 12, LOAD RESISTANCE FACTOR DESIGN (LRFD) *PROCEDURE WITH THE FOLLOWING ASSUMPTIONS:
HEIGHT OF WATER (Hw) = CROWN +1', UNIT WEIGHT OF SOIL (γs) = 120 PCF

©2006 ADS, INC.
ADVANCED DRAINAGE SYSTEMS, INC. ("ADS") HAS PREPARED THIS DETAIL BASED ON INFORMATION PROVIDED TO ADS. THIS DRAWING IS INTENDED TO DEPICT THE COMPONENTS AS REQUESTED. ADS HAS NOT PERFORMED ANY ENGINEERING OR DESIGN SERVICES FOR THIS PROJECT, NOR HAS ADS INDEPENDENTLY VERIFIED THE INFORMATION SUPPLIED. THE INSTALLATION DETAILS PROVIDED HEREIN ARE GENERAL RECOMMENDATIONS AND ARE NOT SPECIFIC FOR THIS PROJECT. THE DESIGN ENGINEER SHALL REVIEW THESE DETAILS PRIOR TO CONSTRUCTION. IT IS THE DESIGN ENGINEERS RESPONSIBILITY TO ENSURE THE DETAILS PROVIDED HEREIN MEETS OR EXCEEDS THE APPLICABLE NATIONAL, STATE, OR LOCAL REQUIREMENTS AND TO ENSURE THAT THE DETAILS PROVIDED HEREIN ARE ACCEPTABLE FOR THIS PROJECT.

REV.	DESCRIPTION	BY	DATE
3	GENERAL UPDATE	CKH	12/4/13

TYPICAL STORM TRENCH DETAIL N-12 HDPE PERFORMANCE (HP)

DRAWING NUMBER: STD-108

ADVANCED DRAINAGE SYSTEMS, INC. 4640 TRUEMAN BLVD HILLIARD, OHIO 43026

DRAWN BY: JAB | DATE: 01/28/08 | SCALE: NTS | SHEET: 1 OF 1

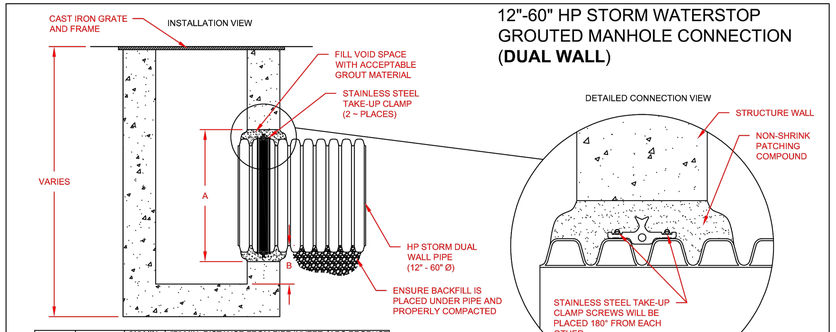

12"-60" HP STORM WATERSTOP GROUTED MANHOLE CONNECTION (DUAL WALL)

PIPE SIZE	PIPE OD	"A" MIN. HOLE Ø	"B" MIN. DISTANCE FROM PIPE INVERT TO STRUCTURE INVERT	ADS PRODUCT CODE
12" (300mm)	14.5" (368mm)	19.50" (495mm)	3.7" (94mm)	1202PS
15" (375mm)	17.6" (447mm)	23.00" (584mm)	4.0" (102mm)	1502PS
18" (450mm)	21.2" (538mm)	26.50" (673mm)	4.2" (107mm)	1802PS
21" (525mm)	24.8" (630mm)	30.25" (768mm)	4.5" (114mm)	2102PS
24" (600mm)	27.8" (706mm)	33.25" (845mm)	4.5" (114mm)	2402PS
30" (750mm)	35.1" (892mm)	40.50" (1029mm)	5.2" (132mm)	3002PS
36" (900mm)	41.1" (1044mm)	47.00" (1194mm)	5.5" (140mm)	3602PS
42" (1050mm)	47.7" (1212mm)	53.00" (1346mm)	5.7" (145mm)	4202PS
48" (1200mm)	53.6" (1361mm)	59.00" (1499mm)	5.7" (145mm)	4802PS
60" (1500mm)	66.3" (1684mm)	72.00" (1829mm)	6.4" (163mm)	6002PS

NOTES:

PERFORMANCE HIGHLY DEPENDENT ON INSTALLATION. CONTRACTOR MUST ENSURE MANHOLE GASKET IS UNIFORMLY SEATED AROUND STRUCTURE ADAPTER. EXTRA PRECAUTIONS MUST BE TAKEN TO PREVENT DIFFERENTIAL SETTLEMENT BETWEEN THE PIPE AND MANHOLE.

INSTALLATION RECOMMENDATIONS ARE ALSO SPECIFIED IN INSTALLATION GUIDE 1.05: WATERSTOP INSTALLATION

© 2016 ADS, INC.
ADVANCED DRAINAGE SYSTEMS, INC. ("ADS") HAS PREPARED THIS DETAIL BASED ON INFORMATION PROVIDED TO ADS. THIS DRAWING IS INTENDED TO DEPICT THE COMPONENTS AS REQUESTED. ADS HAS NOT PERFORMED ANY ENGINEERING OR DESIGN SERVICES FOR THIS PROJECT, NOR HAS ADS INDEPENDENTLY VERIFIED THE INFORMATION SUPPLIED. THE INSTALLATION DETAILS PROVIDED HEREIN ARE GENERAL RECOMMENDATIONS AND ARE NOT SPECIFIC FOR THIS PROJECT. THE DESIGN ENGINEER SHALL REVIEW THESE DETAILS PRIOR TO CONSTRUCTION. IT IS THE DESIGN ENGINEERS RESPONSIBILITY TO ENSURE THE DETAILS PROVIDED HEREIN MEETS OR EXCEEDS THE APPLICABLE NATIONAL, STATE, OR LOCAL REQUIREMENTS AND TO ENSURE THAT THE DETAILS PROVIDED HEREIN ARE ACCEPTABLE FOR THIS PROJECT.

REV.	DESCRIPTION	BY	DATE	CHK'D
3	ADDED METRIC UNITS AND RENAMED	TJR	01/30/16	

12"-60" HP STORM MH GROUTED WATERSTOP

DRAWING NUMBER: STD-206A

ADVANCED DRAINAGE SYSTEMS, INC. 4640 TRUEMAN BLVD HILLIARD, OHIO 43026

DRAWN BY: JAB | DATE: 4/3/09 | SCALE: NTS | SHEET: 1 OF 1

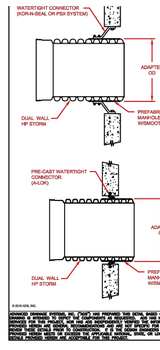

WATERTIGHT CONNECTION USING A MANHOLE BOOT (CORED HOLE OR PRECAST) OR PRECAST COMPRESSION GASKET W/ PREFABRICATED ADAPTER

PIPE SIZE	PREFABRICATED MANHOLE ADAPTER W/SMOOTH EXTERIOR					
	ADAPTER OD	ADS ADAPTER GASKET	PRESS SEAL* SYSTEMS * PSX DIRECT DRIVE *	KOR-N-SEAL * CAST-A-SEAL *	SERIES I OR II	SERIES 300	A-LOK** *
12" (300mm)	14.82" (376.4mm)	1222ANBP	16M OR 20*	CAS 802	9106-20BWS	N/A	480
15" (375mm)	18.06" (458.7mm)	1522ANBP	22L	CAS 802	9106-20WS	9306-22	580
18" (450mm)	21.71" (551.4mm)	1822ANBP	28L	CAS 802	9206-28	9306-28	710
24" (600mm)	28.72" (729.5mm)	2422ANBP	32A	CAS 802	9206-32	9306-32L	920
30" (750mm)	36.30" (922.0mm)	CUSTOM	40S	CAS 802	9206-40	9306-40	1180
36" (900mm)	43.50" (1104.9mm)	CUSTOM	46S	CAS 802	9206-46	9306-46	1350
42" (1050mm)	51.05" (1215mm)	CUSTOM	N/A	CAS 802	N/A	N/A	1540
48" (1200mm)	54.68" (1389mm)	CUSTOM	N/A	CAS 802	N/A	N/A	1745
60" (1500mm)	67.05" (1718mm)	CUSTOM	N/A	CAS 802	N/A	N/A	2160

* 12"(300) THRU 30" (750) ARE SUPPLIED BY MANUFACTURER KOR-N-SEAL is a registered trademark of GPC, Inc. (www.cpvc.com)
PRESS SEAL is a registered trademark of PRESS SEAL CORPORATION. (www.press-seal.com)
A-LOK is a registered trademark of A-LOK Products, Inc. (www.a-lok.com)
** CONTACT AN ADS REPRESENTATIVE FOR CUSTOM ADAPTERS

NOTES:
PERFORMANCE HIGHLY DEPENDENT ON INSTALLATION. CONTRACTOR MUST ENSURE MANHOLE GASKET IS UNIFORMLY SEATED AROUND STRUCTURE ADAPTER. EXTRA PRECAUTIONS MUST BE TAKEN TO PREVENT DIFFERENTIAL SETTLEMENT BETWEEN THE PIPE AND MANHOLE.

THE CAST-A-SEAL CONNECTION IS FOR USE WITH SQUARE MANHOLES ONLY.

SEE STANDARD DETAIL STD-201 AND TECHNICAL NOTE 5.04 CONNECTIONS TO MANHOLES AND STRUCTURES FOR INSTALLATION RECOMMENDATIONS.

©2006 ADS, INC.
ADVANCED DRAINAGE SYSTEMS, INC. ("ADS") HAS PREPARED THIS DETAIL BASED ON INFORMATION PROVIDED TO ADS. THIS DRAWING IS INTENDED TO DEPICT THE COMPONENTS AS REQUESTED. ADS HAS NOT PERFORMED ANY ENGINEERING OR DESIGN SERVICES FOR THIS PROJECT, NOR HAS ADS INDEPENDENTLY VERIFIED THE INFORMATION SUPPLIED. THE INSTALLATION DETAILS PROVIDED HEREIN ARE GENERAL RECOMMENDATIONS AND ARE NOT SPECIFIC FOR THIS PROJECT. THE DESIGN ENGINEER SHALL REVIEW THESE DETAILS PRIOR TO CONSTRUCTION. IT IS THE DESIGN ENGINEERS RESPONSIBILITY TO ENSURE THE DETAILS PROVIDED HEREIN MEETS OR EXCEEDS THE APPLICABLE NATIONAL, STATE, OR LOCAL REQUIREMENTS AND TO ENSURE THAT THE DETAILS PROVIDED HEREIN ARE ACCEPTABLE FOR THIS PROJECT.

REV.	DESCRIPTION	BY	DATE
5	REVISED & ADOPTED N TABLE	KJR	03/16/16
4	ADDED CPT, LINER	KJR	08/05/15

12"-60" HP STORM MH BASE OR COMPRESSION GASKET and STUBS

ORIGINATING NUMBER: STD-207D

ADVANCED DRAINAGE SYSTEMS, INC. 4640 TRUEMAN BLVD HILLIARD, OHIO 43026

DRAWN BY: JDOE | DATE: 2/25/15 | SCALE: NTS | SHEET: 1 OF 1

ADS HP STORM 12"- 60" PIPE SPECIFICATION

Scope
This specification describes 12- through 60-inch (300 to 1500 mm) ADS HP Storm pipe for use in gravity-flow storm drainage applications.

Pipe Requirements
- 12- through 30-inch (300 to 750 mm) pipe shall have a smooth interior and annular exterior corrugations and meet or exceed ASTM F2736 and AASHTO M330
- 36- through 60-inch (900 to 1500 mm) pipe shall have a smooth interior and annular exterior corrugations and meet or exceed ASTM F2881 and AASHTO M330
- Manning's "n" value for use in design shall be 0.012

Joint Performance
Pipe shall be joined with a gasketed integral bell & spigot joint meeting the requirements of ASTM F2736 or F2881, for the respective diameters.

12- through 60-inch (300 to 1500 mm) shall be watertight according to the requirements of ASTM D3212. Spigots shall have gaskets meeting the requirements of ASTM F477. Gasket shall be installed by the pipe manufacturer and covered with a removable, protective wrap to ensure the gasket is free from debris. A joint lubricant available from the manufacturer shall be used on the gasket and bell during assembly.

12- through 60-inch (300 to 1500 mm) diameters shall have a reinforced bell with a polymer composite band installed by the manufacturer.

Fittings
Fittings shall conform to ASTM F2736, ASTM F2881 and AASHTO M330, for the respective diameters. Bell & spigot connections shall utilize a spun-on, welded or integral bell and spigot with gaskets meeting ASTM F477. Bell & spigot fittings joint shall meet the watertight joint performance requirements of ASTM D3212. Corrugated couplings shall be split collar, engaging at least 2 full corrugations.

Field Pipe and Joint Performance
To assure watertightness, field performance verification may be accomplished by testing in accordance with ASTM F1417 or ASTM F2487. Appropriate safety precautions must be used when field-testing any pipe material. Contact the manufacturer for recommended leakage rates.

Material Properties
Polypropylene compound for pipe and fitting production shall be impact modified copolymer meeting the material requirements of ASTM F2736, Section 4, ASTM F2881, Section 5 and AASHTO M330, Section 6.1, for the respective diameters.

Installation
Installation shall be in accordance with ASTM D2321 and ADS recommended installation guidelines, with the exception that minimum cover in traffic areas for 12- through 48-inch (300 to 1200 mm) diameters shall be one foot, (0.3 m) and for 60-inch (1500 mm) diameters, the minimum cover shall be 2 ft, (0.6 m) in single-run applications. Backfill for minimum cover situations shall consist of Class 1, Class 2 (minimum 90% SPD) or Class 3 (minimum 95%) material. Maximum fill heights depend on embedment material and compaction level; please refer to Technical Note 2.04. Contact your local ADS representative or visit our website at www.ads-pipe.com for a copy of the latest installation guidelines.

Pipe Dimensions

Nominal Pipe I.D.	12 (300)	15 (375)	18 (450)	24 (600)	30 (750)	36 (900)	42 (1050)	48 (1200)	60 (1500)
Average Pipe I.D. in (mm)	13.1 (327)	14.5 (370)	18.0 (457)	24.1 (612)	30.1 (765)	36.7 (932)	41.8 (1062)	47.3 (1201)	59.3 (1506)
Average Pipe O.D. in (mm)	14.8 (368)	17.8 (447)	21.2 (538)	28.0 (711)	33.4 (848)	41.1 (1044)	47.2 (1199)	53.9 (1367)	66.5 (1659)
Minimum Pipe Stiffness * @ 5% Deflection* PI/I.in. (kPa)	75 (520)	60 (413)	56 (386)	53 (365)	48 (330)	40 (275)	35 (240)	35 (240)	30 (205)

* Minimum pipe stiffness values listed; contact a representative for maximum values

Table 5-7
Bend Radii for ADS Thermoplastic Pipe

Pipe Diameter, in (mm)	Joint Type	Maximum Deflection at Joint (deg)	Radius, ft (m), per pipe length		
			10 ft (3m)	13 ft (4m)	20 ft (6m)
4 – 36 (100 – 900)	N-12 (split band or bell-bell couplers)	3	191 (58)	248 (76)	382 (116)
42 – 60 (1050 – 1500)	N-12 (split band or bell-bell couplers)	1.5	382 (117)	497 (152)	764 (233)
4 – 24 (100 – 600)	N-12 ST IB or N-12 WT IB (bell & spigot)	1.5	n/a	497 (152)	764 (233)
30 – 60 (750 – 1500)	N-12 ST IB or N-12 WT IB (bell & spigot)	1	n/a	745 (227.1)	1146 (349)
12 – 60 (300 – 1500)	HP STORM, SaniTite, SaniTite HP or Low Head (extended bell & spigot)	3	n/a	248 (76)	382 (116)

Bend radii calculated with joint articulations only. Calculations do not assume any bend in the pipe wall. Joint deflections based on joint profiles and accounts for possible field variances.

STORM SEWER GENERAL NOTES

1. THE CONTRACTOR SHALL COORDINATE WITH THE GEOTECHNICAL ENGINEER AND PIPE MANUFACTURE (ADS) TO DETERMINE ACCEPTABLE MATERIAL(S) FOR BACKFILL AND SHALL PRESENT A COPY OF THE TYPICAL TRENCH SECTION(S) TO EL PASO COUNTY ENGINEERING FOR ACCEPTANCE PRIOR TO CONSTRUCTION.
2. COMPACTION AND MATERIAL TESTING SHALL BE IN ACCORDANCE WITH EL PASO COUNTY SPECIFICATIONS.
3. THE SPECIFICATION AND GUIDELINES PROVIDED ON THIS PLAN ARE FOR INFORMATION PURPOSES ONLY, IT IS THE CONTRACTOR RESPONSIBILITY TO BE IN COMPLIANCE WITH THE INSTALLATION GUIDELINES PROVIDED BY THE PIPE MANUFACTURE.

CLEARWAY, LOT 5
STORM SEWER DETAILS

PROJECT NO. 44-042A | SCALE: HORIZONTAL: N/A VERTICAL: N/A | DATE: 06/13/2023 | SHEET 11 OF 16 | ST06

DESIGNED BY: DLM
DRAWN BY: CLP
CHECKED BY: DLM

212 N. WAHSATCH AVE. STE 305
COLORADO SPRINGS, CO 80903
PHONE: 719.955.5485
CIVIL CONSULTANTS, INC.

FOR AND ON BEHALF OF M&S CIVIL CONSULTANTS, INC.

VIRGIL A. SANCHEZ, COLORADO P.E. NO. 37160
37160 REGISTERED PROFESSIONAL ENGINEER
06/14/2023

FOR LOCATING & MARKING GAS, ELECTRIC, WATER & TELEPHONE LINES
FOR BURIED UTILITY INFORMATION
48 HRS BEFORE YOU DIG
CALL 1-800-922-1987

REVISIONS:

NO.	DATE:	BY:	DESCRIPTION:	APPV'D:	BY:	DATE:

THE ENGINEER PREPARING THESE PLANS WILL NOT BE RESPONSIBLE, OR LIABLE FOR, UNAUTHORIZED CHANGES TO OR USES OF THESE PLANS. ALL CHANGES TO THE PLANS MUST BE IN WRITING AND MUST BE APPROVED BY THE PREPARER OF THESE PLANS.

CAUTION

File: O:\44042A-Wire Nut Vtammers\Dwg\Storm\44042A-ST06.dwg Plotstamp: 6/14/2023 4:11 PM

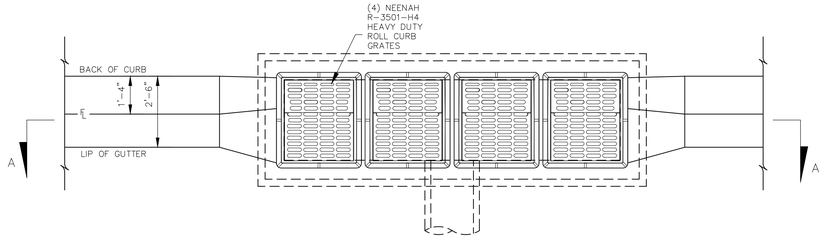

MODIFIED CCD TRIPLE NUMBER 16 INLET
PLAN W/GRATES
NOT TO SCALE

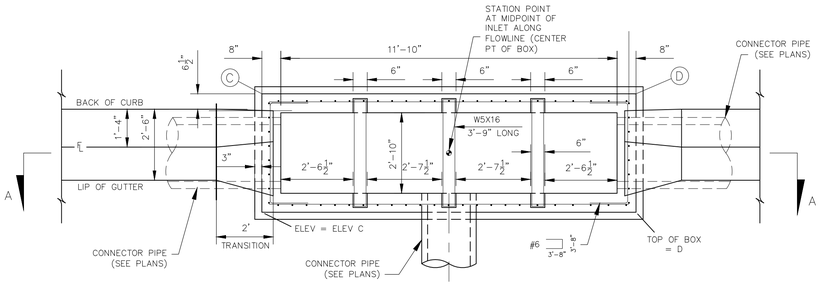

MODIFIED CCD TRIPLE NUMBER 16 INLET
PLAN
NOT TO SCALE

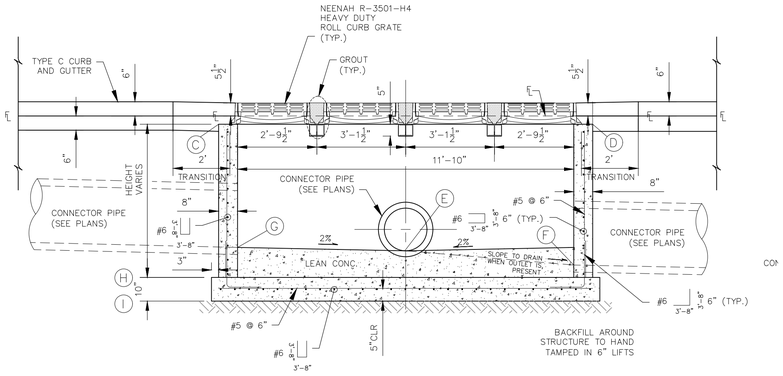

MODIFIED CCD TRIPLE NUMBER 16 INLET
ELEVATION
NOT TO SCALE

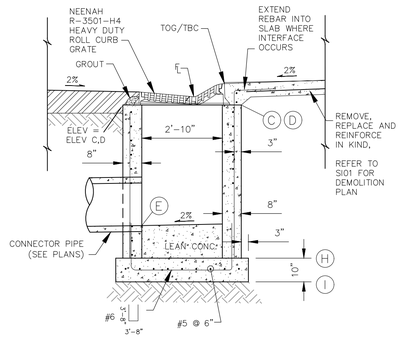

MODIFIED CCD TRIPLE NUMBER 16 INLET
SECTION
NOT TO SCALE

INLET	CENTER OF BOX		NORTH OUTSIDE EDGE TOP OF BOX ELEVATIONS			SOUTH OUTSIDE EDGE TOP OF BOX ELEVATIONS		
	STORM STATION	STREET STATION OFFSET	STREET STATION OFFSET	ELEVATION	POINT	STREET STATION OFFSET	ELEVATION	POINT
1	1+53.59	2+99.29, 13.21 RT	2+92.68, 15.19 RT	6263.05	D	3+05.84, 15.41 RT	6262.68	C
2	1+26.58	2+99.75, 13.79 LT	2+93.20, 15.98 LT	6262.99	C	3+06.37, 15.76 LT	6262.64	D
3	1+00.00	3+25.87, 13.67 RT	3+19.26, 15.63 RT	6263.41	D	3+32.42, 15.86 RT	6262.18	C
4	1+27.01	3+26.32, 13.34 LT	3+19.78, 15.53 LT	6262.35	C	3+32.94, 15.32 LT	6262.07	D
5	1+66.56	3+65.87, 12.67 LT	3+59.33, 14.86 LT	6261.48	C	3+72.49, 14.64 LT	6261.12	D

INLET	BOX STORM SEWER ELEVATIONS										TOP OF SLAB/BOTTOM OF SLAB ELEVATIONS			
	STORM STATION	PIPE SIZE	INVERT ELEVATION (IN)	POINT	PIPE SIZE	INVERT ELEVATION (OUT)	POINT	PIPE SIZE	INVERT ELEVATION (IN)	POINT	TOP SLAB ELEVATION	POINT	BTM SLAB ELEVATION	POINT
1	1+53.59				18	6253.49	E				6252.93	H	6252.10	I
2	1+26.58	18	6253.37	E	24	6252.87	F				6252.14	H	6251.31	I
3	1+00.00				15	6253.37	E				6252.68	H	6251.84	I
4	1+27.01	15	6253.25	E	24	6252.50	F	24	6252.80	G	6251.82	H	6250.99	I
5	1+66.56				30	6251.86	E	24	6252.36	G	6251.12	H	6250.29	I

THE ELEVATIONS PROVIDED IN THE TABLES ABOVE ARE TO BE VERIFIED AND ADJUSTED BASED UPON TOP OF GRATE/EXISTING TOP BACK OF CURB IN AREAS WHERE EXISTING PARKING STALLS ARE PRESENT. INLETS ARE RECOMMENDED TO BE CAST IN PLACE TO ALLOW FOR FIELD FITMENT

MODIFIED CCD TRIPLE NUMBER 16 INLET
STAKING TABLE

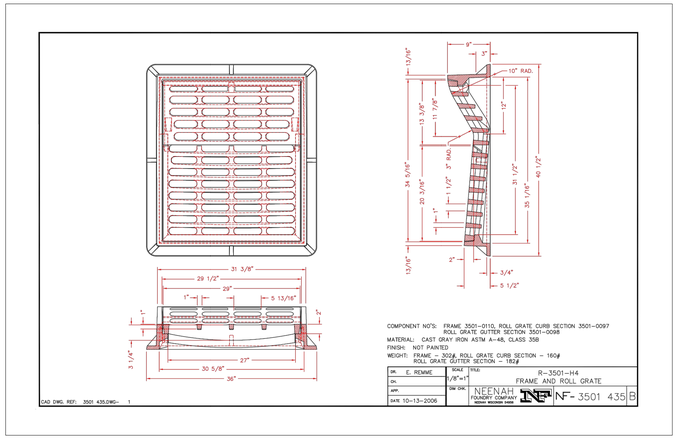

FRAME AND GRATE DETAIL

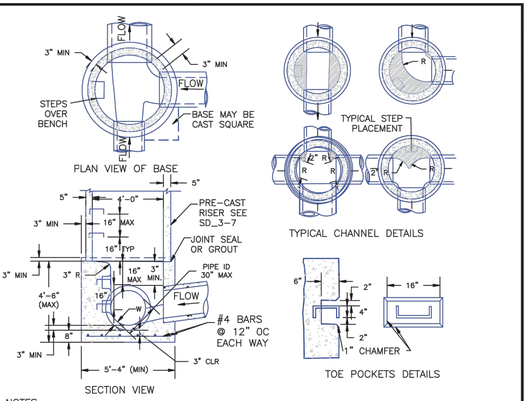

NOTES

1. TYPE II MANHOLES SHALL BE USED WHEN APPROPRIATE AND TYPICALLY WHEN THE PIPE SIZES ARE 30" OR LESS INSIDE DIAMETER.

2. VIEW AND DETAILS ARE TYPICAL. DESIGN ENGINEER SHALL DETERMINE MANHOLE BASE CONFIGURATION AND DIMENSIONS FOR PARTICULAR PIPE SIZES AND ALIGNMENT.

3. EITHER LADDER OF STEPS SHALL BE INSTALLED WHEN MANHOLE DEPTH EXCEEDS 30". STEPS IN BASE SHALL BE INSTALLED IN "TOE POCKETS" (SEE DETAIL THIS SHEET). LOWEST STEP SHALL BE A MAXIMUM OF 16" ABOVE THE FLOOR.

4. PIPES SHALL BE TRIMMED TO FINAL SHAPE AND SET BEFORE MANHOLE IS POURED.

5. BENCH SHALL BE SLOPED TOWARD CENTER OF MANHOLE BASE (4:1 MAX., ½" PER FOOT. MIN.).

6. FLOOR OF MANHOLE SHALL BE TROWELLED TO A SMOOTH, HARD SURFACE AND SHALL SLOPE TOWARDS THE OUTLET (8:1., ½" PER FT. MIN.) . FLOOR SHALL BE SHAPED AND CHANNELED; SEE DETAILS THIS SHEET.

SCALE: NOT TO SCALE

STORM SEWER MANHOLE DETAIL
TYPE II SD 3-2

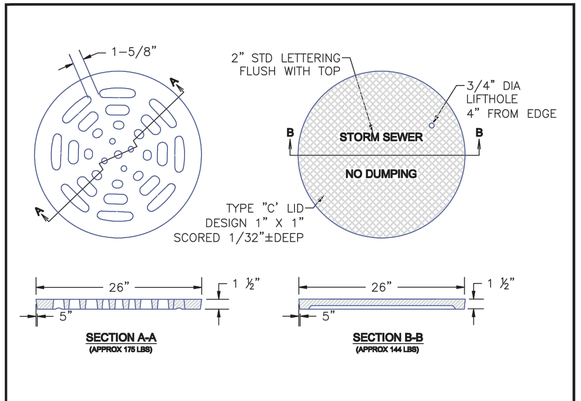

SCALE: NOT TO SCALE

STORM SEWER MANHOLE L
LID DETAILS SD 3-2

CONSTRUCTION NOTES

SUB-GRADE SHALL BE 6-12" OF CLASS B BEDDING COMPACTED PER WCPM STANDARD CONSTRUCTION SPECIFICATIONS, ON SUITABLE, UNDISTURBED MATERIAL. IF SUBGRADE IS UNSUITABLE, THE SUBGRADE SHALL BE OVEREXCAVATED AND STABILIZED WITH CLASS B BEDDING PER WCPM STANDARD CONSTRUCTION SPECIFICATIONS.

FLOOR SLOPE MAY BE POURED MONOLITHIC WITH BASE.

Sc = SLOPE OF CONNECTOR = 2% MIN.

UNLESS OTHERWISE SPECIFIED ON THE DRAWINGS OR OTHERWISE APPROVED, ALL NO. 16 INLETS SHALL BE CONSTRUCTED WITH AN ADJUSTABLE CAST IRON CURB BOX **(S-716)**.

DESIGN CONDITIONS FOR INLET ALLOWS DEPTHS OF 12'-0" (MAX.). FOR INLETS MORE THAN 12'-0" FEET IN DEPTH, SHOP DRAWINGS AND DESIGN ANALYSIS SHALL BE SUBMITTED FOR APPROVAL.

ALL REINFORCING STEEL SHALL BE ASTM, A-615, GRADE 60 DEFORMED BARS. DIAMETER OF BEND MEASURED ON THE INSIDE OF THE BAR SHALL BE A MINIMUM OF 6 BAR DIAMETER.

ALL SHALL CONFORM TO AASHTO LRFD BRIDGE DESIGN SPECIFICATIONS, 8TH EDITION, 2017.

NO FORMWORK SHALL WORK REMAIN INSIDE STRUCTURE WHEN COMPLETE.

CONCRETE MIX FOR GUTTER AND ANY ADDED STREET PANELS SHALL MEET CLASS 2 REQUIREMENTS FOR SULFATE RESISTANCE IN ACCORDANCE WITH CDOT STANDARD 601.04 ON STREETS WHERE MAGNESIUM CHLORIDE CHEMICAL DEICERS ARE APPLIED. REFER TO WCPM STANDARD CONSTRUCTION SPECIFICATIONS SECTION 11 FOR REQUIREMENTS FOR SULFATE RESISTANCE IN CONCRETE EXPOSED TO EARTH.

SPLICING OF REINFORCING STEEL SHALL BE PERMITTED ONLY WHERE DETAILED IN DRAWINGS.

INLET WALLS SHALL BE FORMED BOTH INSIDE AND OUTSIDE. CASTING OF SIDEWALLS AGAINST EARTH IS NOT PERMITTED.

LEAN CONCRETE FILL TO BE F'C = 2000 PSI. INLET STRUCTURE, LID, STREET CURB AND GUTTER, AND PAVEMENT TO BE F'C = 4,500 PSI, MAX W/CM = 0.45 AND AIR ENTRAINED 5% TO 8%. F'C = 28 DAY COMPRESSIVE STRENGTH REQUIREMENT FOR MIX DESIGN, FIELD ACCEPTANCE.

FOR THROUGH STRUCTURES, BENCHES MUST COME TO TOP OF PIPE.

NO CORNER PENETRATIONS ON STRUCTURE.

EL PASO COUNTY FILE NO. PCD # PPR-22-034

ENGINEERING RECORD DRAWINGS

John P. Schwab Date: 10/6/26

JOHN P. SCHWAB, PE# 29891
FOR AND ON BEHALF OF JPS ENGINEERING, INC.

CLEARWAY, LOT 5
STORM SEWER DETAILS

PROJECT NO. 44-042A | DESIGNED BY: DLM | DRAWN BY: CLP | CHECKED BY: DLM
SCALE: HORIZONTAL: N/A VERTICAL: N/A
DATE: 06/13/2023
SHEET 12 OF 16
ST07

212 N. WAHSATCH AVE. STE 305
COLORADO SPRINGS, CO 80903
PHONE: 719.955.5485

CIVIL CONSULTANTS, INC.

FOR AND ON BEHALF OF M&S CIVIL CONSULTANTS, INC.

VIRGIL A. SANCHEZ, COLORADO P.E. NO. 37160
37160
06/14/2023

REVISIONS:

NO.	DATE:	BY:	DESCRIPTION:	APPR'D. BY:	DATE:

THE ENGINEER PREPARING THESE PLANS WILL NOT BE RESPONSIBLE OR LIABLE FOR UNAUTHORIZED CHANGES TO OR USES OF THESE PLANS. ALL CHANGES TO THE PLANS MUST BE IN WRITING AND MUST BE APPROVED BY THE PREPARER OF THESE PLANS.

CAUTION

FOR LOCATING & MARKING GAS, ELECTRIC, WATER & TELEPHONE LINES
FOR BURIED UTILITY INFORMATION
48 HRS BEFORE YOU DIG
CALL 1-800-922-1987

File: O:\44042A-Wire Nut\Hammers\Dwg\Const Dwg\Storm\44042A-ST07.dwg Plotstamp: 6/14/2023 3:37 PM

ENGINEERING RECORD DRAWINGS

John P. Schwab Date: 10/6/26

JOHN P. SCHWAB, PE# 29891
FOR AND ON BEHALF OF JPS ENGINEERING, INC.

3299CGSQSB

APPROX. GRATE DRAIN AREA = 551.25 SQ IN
*APPROX. WEIGHT WITH FRAME = 249.00 LBS

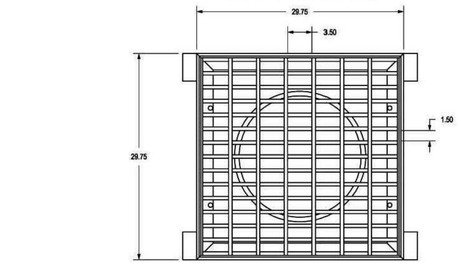

TOP OF BASE PLATE TO TOP OF DRAIN BASIN
12BASEG: 2.82
15BASEG: 2.82
18BASEG: 2.82
24BASEG: 2.82
30BASEG: .38

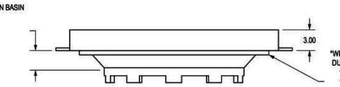

*WEIGHT DOES NOT INCLUDE DUCTILE IRON BASE PLATE
12BASEG: APPROX. 109.00 LBS
15BASEG: APPROX. 98.00 LBS
18BASEG: APPROX. 85.00 LBS
24BASEG: APPROX. 83.00 LBS
30BASEG: APPROX. 82.00 LBS

ALL DIMENSIONS IN INCHES UNLESS NOTED OTHERWISE
GRATE MEETS H-20 LOAD RATING
QUALITY: FRAME & GRATE MATERIALS SHALL CONFORM TO ASTM A-36 STEEL, BASE PLATE MATERIALS SHALL CONFORM TO ASTM A536 GRADE 70-50-05 DUCTILE IRON.
LOCKING DEVICE AVAILABLE UPON REQUEST SEE DRAWING NO. 7001-110-256

THIS PRINT DISCLOSES SUBJECT MATTER IN WHICH NYLOPLAST HAS PROPRIETARY RIGHTS. THE RECEIPT OR POSSESSION OF THIS PRINT DOES NOT CONFER, TRANSFER, OR LICENSE THE USE OF THE DESIGN OR TECHNICAL INFORMATION SHOWN HEREIN. REPRODUCTION OF THIS PRINT OR ANY INFORMATION CONTAINED HEREIN, OR MANUFACTURE OF ANY ARTICLE HEREFROM, FOR THE DISCLOSURE TO OTHERS IS FORBIDDEN, EXCEPT BY SPECIFIC WRITTEN PERMISSION FROM NYLOPLAST. ©2013 NYLOPLAST

DRAWN BY	CJA	MATERIAL	
DATE	03-20-13		
REVISED BY	CCA	PROJECT NO./NAME	
DATE	06-04-13		
DWG SIZE	A	SCALE 1:10 SHEET 1 OF 1	

Nyloplast
3130 VERONA AVE
BUFORD, GA 30518
PHN (770) 932-2443
FAX (770) 932-2490
www.nyloplast-us.com

TITLE: 2 FT X 2 FT STEEL BAR GRATE ASSEMBLY
DWG NO. 7001-110-256 REV F

NYLOPLAST 24" DRAIN BASIN: 2824AG _ _X

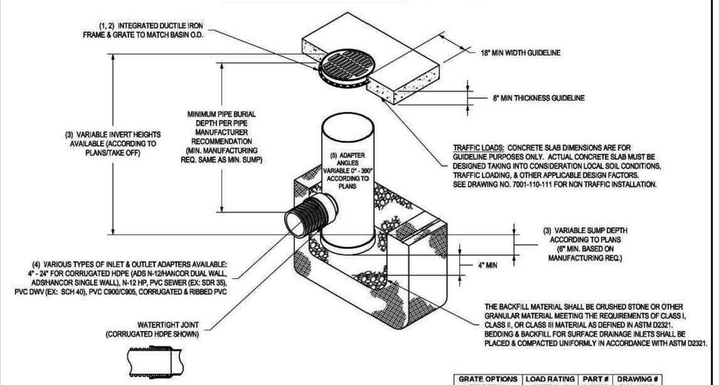

GRATE OPTIONS	LOAD RATING	PART #	DRAWING #
PEDESTRIAN	MEETS H-10	2499DGP	7001-110-216
STANDARD	MEETS H-20	2499DGS	7001-110-217
SOLID COVER	MEETS H-20	2499DSC	7001-110-218
DOME	N/A	2499DDD	7001-110-219
DROP IN GRATE	LIGHT DUTY	2401DI	7001-110-075

1 - GRATES/SOLID COVER SHALL BE DUCTILE IRON PER ASTM A536 GRADE 70-50-05.
2 - FRAMES SHALL BE DUCTILE IRON PER ASTM A536 GRADE 70-50-05.
3 - DRAIN BASIN TO BE CUSTOM MANUFACTURED ACCORDING TO PLAN DETAILS. RISERS ARE NEEDED FOR BASINS OVER 84" DUE TO SHIPPING RESTRICTIONS. SEE DRAWING NO. 7001-110-300.
4 - DRAINAGE CONNECTION STUB JOINT TIGHTNESS SHALL CONFORM TO ASTM D3212 FOR CORRUGATED HDPE (ADS N-12/HANCOR DUAL WALL) & PVC SEWER.
5 - ADAPTERS CAN BE MOUNTED ON ANY ANGLE 0° TO 360°. TO DETERMINE MINIMUM ANGLE BETWEEN ADAPTERS SEE DRAWING NO. 7001-110-912.

THIS PRINT DISCLOSES SUBJECT MATTER IN WHICH NYLOPLAST HAS PROPRIETARY RIGHTS. THE RECEIPT OR POSSESSION OF THIS PRINT DOES NOT CONFER, TRANSFER, OR LICENSE THE USE OF THE DESIGN OR TECHNICAL INFORMATION SHOWN HEREIN. REPRODUCTION OF THIS PRINT OR ANY INFORMATION CONTAINED HEREIN, OR MANUFACTURE OF ANY ARTICLE HEREFROM, FOR THE DISCLOSURE TO OTHERS IS FORBIDDEN, EXCEPT BY SPECIFIC WRITTEN PERMISSION FROM NYLOPLAST. ©2013 NYLOPLAST

DRAWN BY	ESC	MATERIAL	
DATE	04-03-08		
REVISED BY	NMH	PROJECT NO./NAME	
DATE	03-14-16		
DWG SIZE	A	SCALE 1:40 SHEET 1 OF 1	

ADS Nyloplast
3130 VERONA AVE
BUFORD, GA 30518
PHN (770) 932-2443
FAX (770) 932-2490
www.nyloplast-us.com

TITLE: 24 IN DRAIN BASIN QUICK SPEC INSTALLATION DETAIL
DWG NO. 7001-110-192 REV E

NYLOPLAST DRAIN BASIN WITH 2 FT X 2FT STEEL BAR GRATE

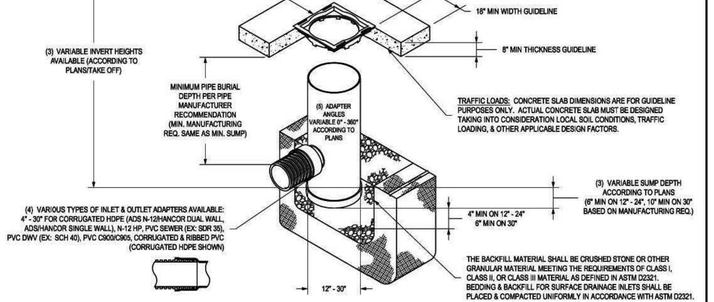

1 - 12" - 30" BASE PLATES SHALL BE DUCTILE IRON PER ASTM A536 GRADE 70-50-05.
2 - FRAME & GRATE SHALL BE STEEL PER ASTM A36.
3 - DRAIN BASIN TO BE CUSTOM MANUFACTURED ACCORDING TO PLAN DETAILS.
4 - DRAINAGE CONNECTION STUB JOINT TIGHTNESS SHALL CONFORM TO ASTM D3212 FOR CORRUGATED HDPE (ADS N-12/HANCOR DUAL WALL), N-12 HP, & PVC SEWER (4" - 24").
5 - ADAPTERS CAN BE MOUNTED ON ANY ANGLE 0° TO 360°. TO DETERMINE MINIMUM ANGLE BETWEEN ADAPTERS SEE DRAWING NO. 7001-110-012.
6 - STEEL BAR GRATE SHALL MEET H-20 LOAD RATING.

THIS PRINT DISCLOSES SUBJECT MATTER IN WHICH NYLOPLAST HAS PROPRIETARY RIGHTS. THE RECEIPT OR POSSESSION OF THIS PRINT DOES NOT CONFER, TRANSFER, OR LICENSE THE USE OF THE DESIGN OR TECHNICAL INFORMATION SHOWN HEREIN. REPRODUCTION OF THIS PRINT OR ANY INFORMATION CONTAINED HEREIN, OR MANUFACTURE OF ANY ARTICLE HEREFROM, FOR THE DISCLOSURE TO OTHERS IS FORBIDDEN, EXCEPT BY SPECIFIC WRITTEN PERMISSION FROM NYLOPLAST. ©2013 NYLOPLAST

DRAWN BY	ESC	MATERIAL	
DATE	03-22-16		
REVISED BY	NMH	PROJECT NO./NAME	
DATE	03-16-16		
DWG SIZE	A	SCALE 1:40 SHEET 1 OF 1	

Nyloplast
3130 VERONA AVE
BUFORD, GA 30518
PHN (770) 932-2443
FAX (770) 932-2490
www.nyloplast-us.com

TITLE: DRAIN BASIN WITH 2 FT X 2 FT STEEL BAR GRATE QUICK SPEC INSTALLATION DETAIL
DWG NO. 7001-110-204 REV D

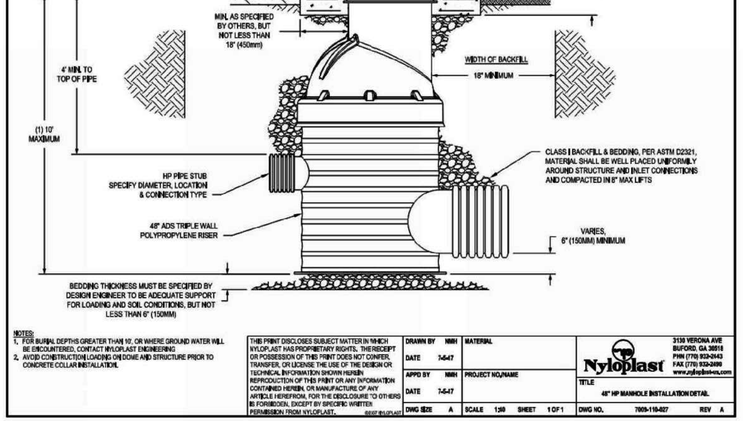

NOTES:
1. FOR BURIAL DEPTHS GREATER THAN 10', OR WHERE GROUND WATER WILL BE ENCOUNTERED, CONTACT NYLOPLAST ENGINEERING.
2. AVOID CONSTRUCTION LOADING ON DOME AND STRUCTURE PRIOR TO CONCRETE COLLAR INSTALLATION.

THIS PRINT DISCLOSES SUBJECT MATTER IN WHICH NYLOPLAST HAS PROPRIETARY RIGHTS. THE RECEIPT OR POSSESSION OF THIS PRINT DOES NOT CONFER, TRANSFER, OR LICENSE THE USE OF THE DESIGN OR TECHNICAL INFORMATION SHOWN HEREIN. REPRODUCTION OF THIS PRINT OR ANY INFORMATION CONTAINED HEREIN, OR MANUFACTURE OF ANY ARTICLE HEREFROM, FOR THE DISCLOSURE TO OTHERS IS FORBIDDEN, EXCEPT BY SPECIFIC WRITTEN PERMISSION FROM NYLOPLAST. ©2007 NYLOPLAST

DRAWN BY	NMH	MATERIAL	
DATE	7-6-17		
APPD BY	NMH	PROJECT NO./NAME	
DATE	7-6-17		
DWG SIZE	A	SCALE 1:20 SHEET 1 OF 1	

Nyloplast
3130 VERONA AVE
BUFORD, GA 30518
PHN (770) 932-2443
FAX (770) 932-2490
www.nyloplast-us.com

TITLE: 48" MP MANHOLE INSTALLATION DETAIL
DWG NO. 7003-110-027 REV A

ALTERNATIVE FOR TYPE II 4' DIA MANHOLES

EL PASO COUNTY FILE NO. PCD # PPR-22-034

FOR LOCATING & MARKING GAS, ELECTRIC, WATER & TELEPHONE LINES
FOR BURIED UTILITY INFORMATION
48 HRS BEFORE YOU DIG
CALL 1-800-922-1987

CLEARWAY, LOT 5
STORM SEWER DETAILS

PROJECT NO. 44-042A | SCALE: HORIZONTAL: N/A VERTICAL: N/A | DATE: 06/13/2023 | SHEET 13 OF 16 | ST08

DESIGNED BY: DLM
DRAWN BY: CLP
CHECKED BY: DLM

212 N. WAHSATCH AVE, STE 305
COLORADO SPRINGS, CO 80903
PHONE: 719.955.5485

CIVIL CONSULTANTS, INC.

VIRGIL A. SANCHEZ, COLORADO P.E. NO. 37160
FOR AND ON BEHALF OF M&S CIVIL CONSULTANTS, INC.

REGISTERED PROFESSIONAL ENGINEER
VIRGIL A. SANCHEZ
No. 37160
06/14/2023

REVISIONS:

NO.	DATE:	BY:	DESCRIPTION:	APPV'D. BY:	DATE:

THE ENGINEER PREPARING THESE PLANS WILL NOT BE RESPONSIBLE, OR LIABLE FOR, UNAUTHORIZED CHANGES TO OR USES OF THESE PLANS. ALL CHANGES TO THE PLANS MUST BE IN WRITING AND MUST BE APPROVED BY THE PREPARER OF THESE PLANS.

CAUTION

File: O:\44042A-Wire Nut\Hammers\Dwg\Const Dwg\Storm\44042A-ST08.dwg Plotstamp: 6/14/2023 4:11 PM

LEGEND

EX	EXISTING
FUT	FUTURE
PROP	PROPOSED
7070	PROP MAJ CONT
	PROP MIN CONT
(7070)	EXIST MAJ CONT
	EXIST MIN CONT
	RIPRAP TYP.
	CDOT CLASS C MATERIAL
	PROPERTY LINE
	RIGHT-OF-WAY LINE
	PROP STORM SEWER PIPE
	WARNING SIGN

POND 1 SAND FILTER DETENTION BASIN DATA

WQ WATER SURFACE EL = 6252.31
WQ VOLUME=0.053 AC-FT
EURV WATER SURFACE EL = 6254.20
EURV VOLUME=0.248 AC-FT
100-YR WATER SURFACE EL=6254.41
100-YR VOLUME=0.276 AC-FT
SPILLWAY CREST EL=6254.75
TOP OF EMBANKMENT EL=6256.00
RATIONAL 100-YR INFLOW=14.8 CFS
MHFD 100-YR INFLOW = 8.0 CFS
MHFD 100-YR RELEASE = 1.6 CFS

1" = 10'
0 5 10 20
Scale in Feet

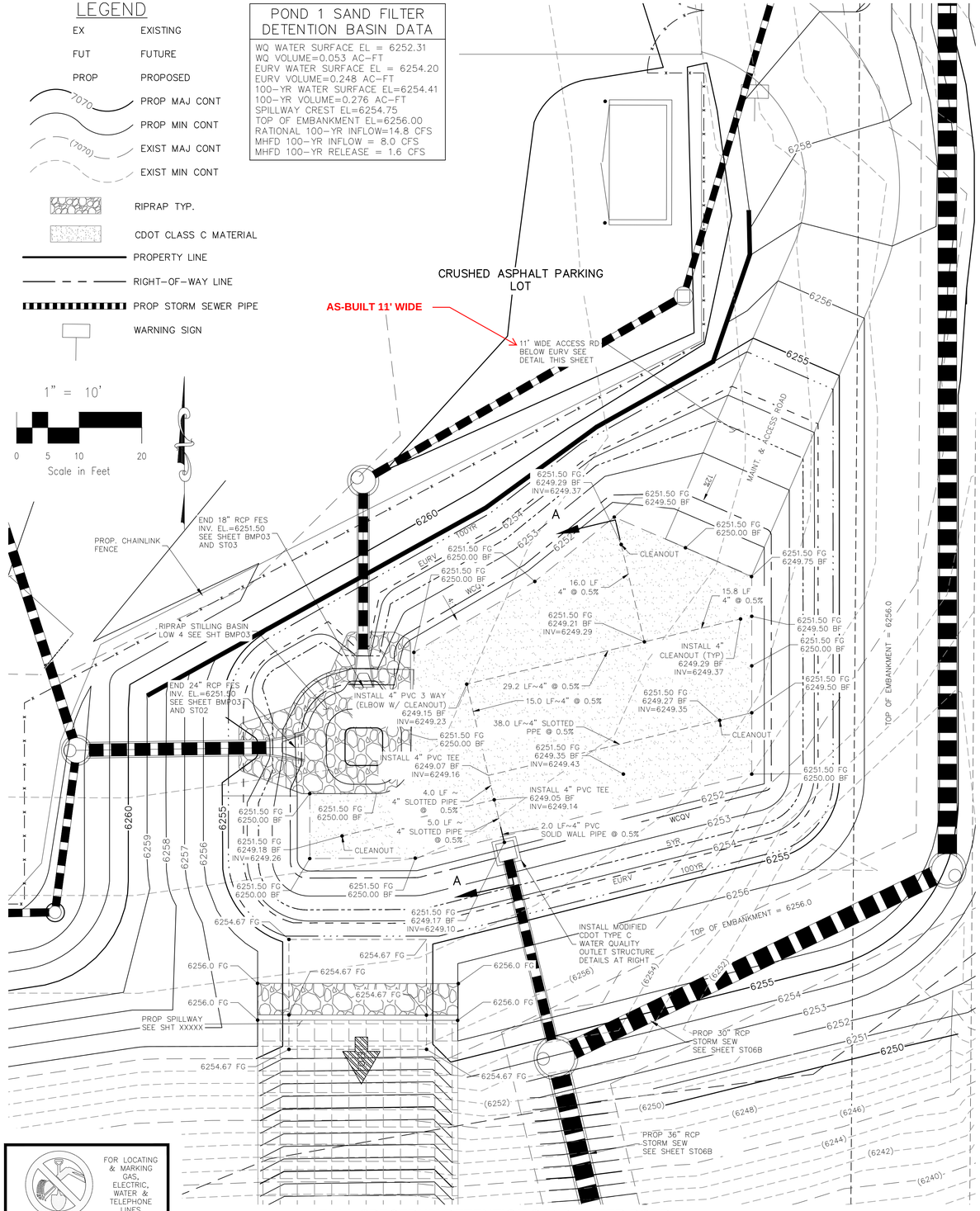

FOR LOCATING & MARKING GAS, ELECTRIC, WATER & TELEPHONE LINES
FOR BURIED UTILITY INFORMATION
48 HRS BEFORE YOU DIG
CALL 1-800-922-1987

FULL SPECTRUM DETENTION SAND FILTER POND 1 SITE PLAN

SCALE 1"=10'

ENGINEERING RECORD DRAWINGS

John P. Schwab Date: 11/17/26

JOHN P. SCHWAB, PE# 29891
FOR AND ON BEHALF OF JPS ENGINEERING, INC.

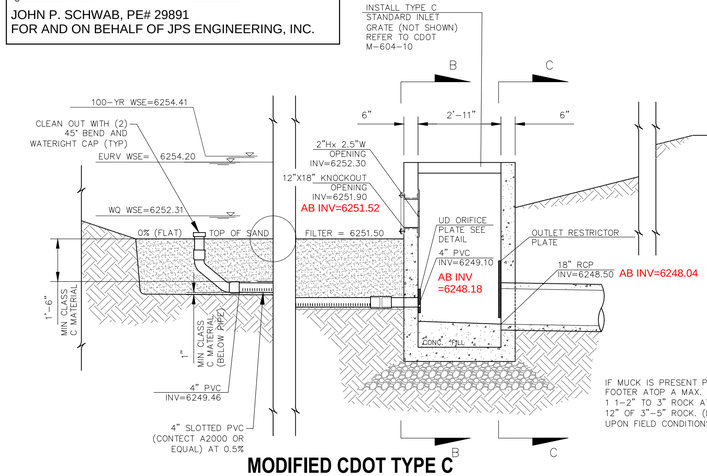

MODIFIED CDOT TYPE C FULL SPECTRUM OUTLET BOX AND SAND FILTER SECTION A-A

NOT TO SCALE

IF MUCK IS PRESENT PLACE FOOTER ATOP A MAX. OF 12" OF 1 1-2" TO 3" ROCK ATOP 12" OF 3"-5" ROCK. (DEPENDANT UPON FIELD CONDITIONS)

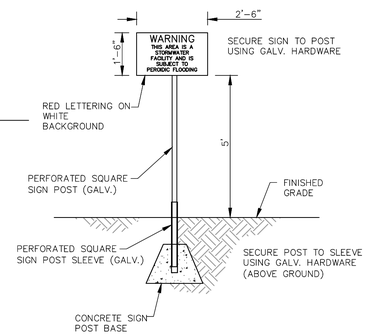

POND WARNING SIGN

NOT TO SCALE

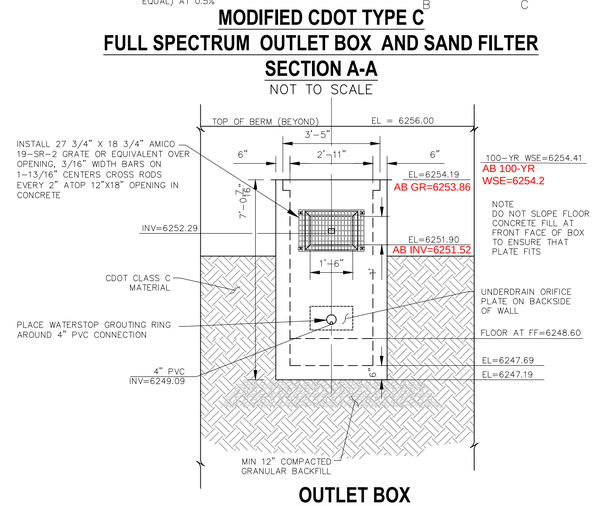

OUTLET BOX FRONT WALL

NOT TO SCALE

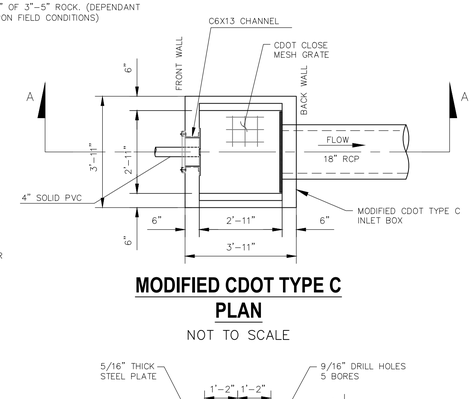

MODIFIED CDOT TYPE C PLAN

NOT TO SCALE

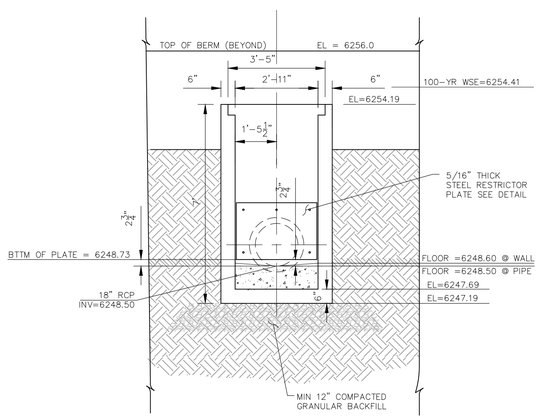

OUTLET BOX REAR WALL

NOT TO SCALE

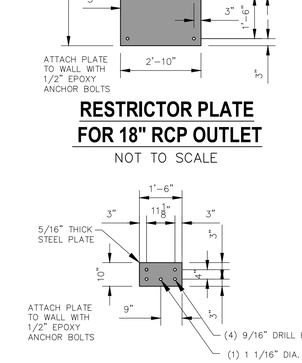

RESTRICTOR PLATE FOR 18" RCP OUTLET

NOT TO SCALE

UNDERDRAIN ORIFICE PLATE

NOT TO SCALE

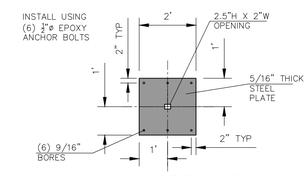

ORIFICE PLATE FOR 12"x18" OPENING

NOT TO SCALE

CLEARWAY, LOT 5
OUTLET STURCTURE POND 1 DETAILS

PROJECT NO. 44-042A
DESIGNED BY: DLM
DRAWN BY: CLP
CHECKED BY: DLM
SCALE: HORIZONTAL: 1"=50' VERTICAL: 1"=5'
DATE: 06/13/2023
SHEET 14 OF 16
BMP01

212 N. WAHSATCH AVE. STE 305
COLORADO SPRINGS, CO 80903
PHONE: 719.955.5485
CIVIL CONSULTANTS, INC.

FOR AND ON BEHALF OF M&S CIVIL CONSULTANTS, INC.

VIRGIL A. SANCHEZ, COLORADO P.E. NO. 37160
STATE OF COLORADO VIRGIL A. SANCHEZ 37160 REGISTERED PROFESSIONAL ENGINEER
06/14/2023

REVISIONS:

NO.	DATE:	BY:	DESCRIPTION:	APPVD. BY:	DATE:

THE ENGINEER PREPARING THESE PLANS WILL NOT BE RESPONSIBLE, OR LIABLE FOR, UNAUTHORIZED CHANGES TO OR USES OF THESE PLANS. ALL CHANGES TO THE PLANS MUST BE IN WRITING AND MUST BE APPROVED BY THE PREPARER OF THESE PLANS.
CAUTION

File: O:\44042A-Wire Nut\Hammers\Dwg\Const Dwg\BMP\44042A BMP01.dwg Plotstamp: 6/14/2023 3:37 PM

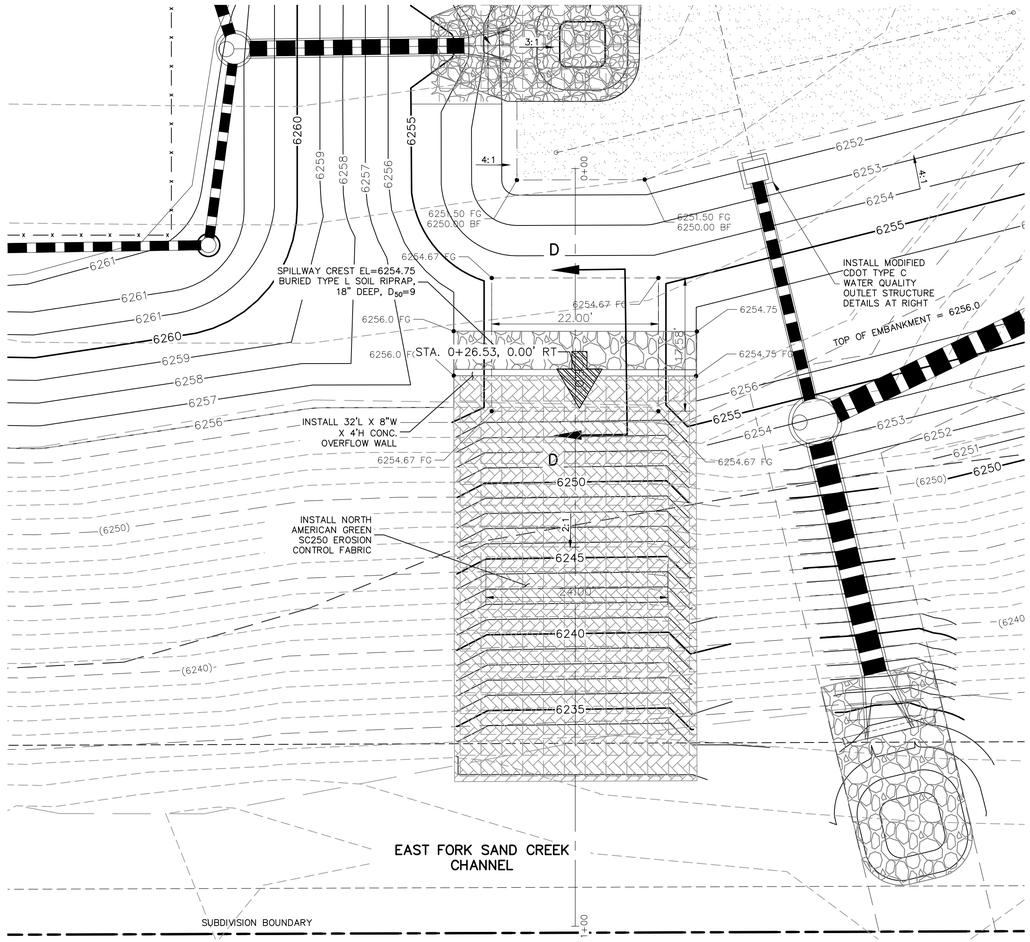

EMERGENCY OVERFLOW/RUNDOWN PLAN

NOT TO SCALE

1" = 10'

0 5 10 20

Scale in Feet

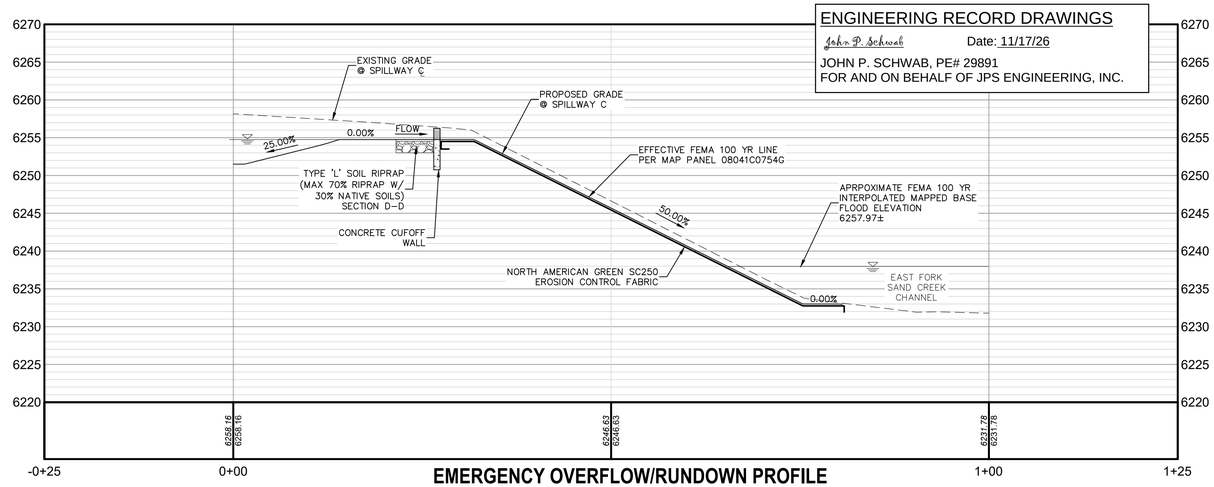

EMERGENCY OVERFLOW/RUNDOWN PROFILE

NOT TO SCALE

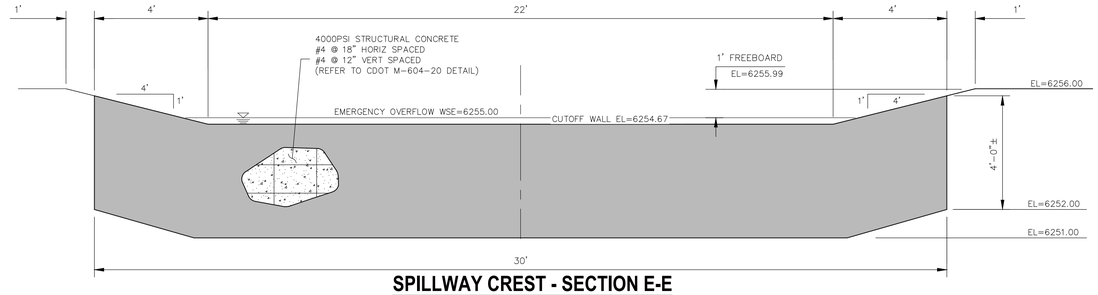

SPILLWAY CREST - SECTION E-E

NOT TO SCALE

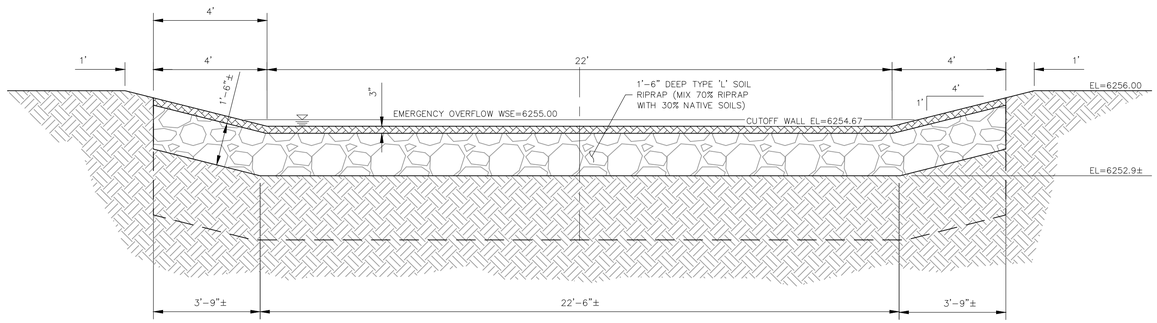

SPILLWAY CREST - SECTION D-D

NOT TO SCALE

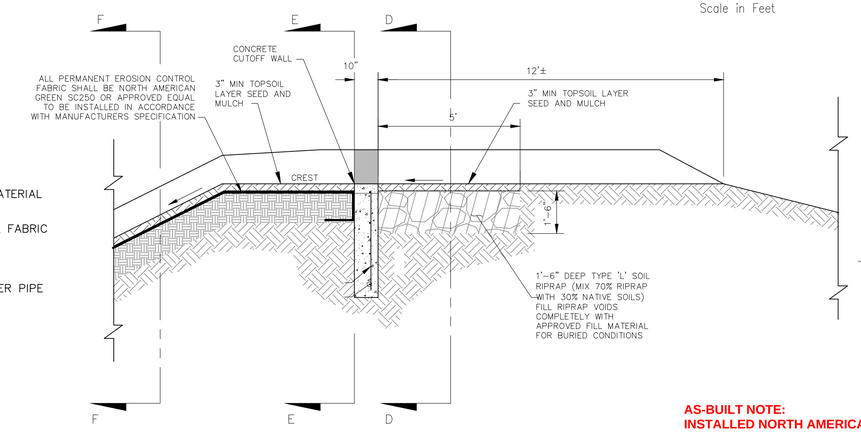

SPILLWAY SECTION D-D

NOT TO SCALE

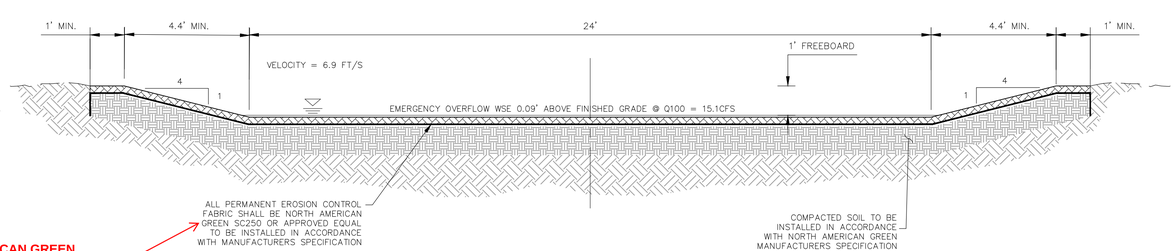

SPILLWAY RUNDOWN - SECTION F-F

NOT TO SCALE

AS-BUILT NOTE:
INSTALLED NORTH AMERICAN GREEN VMAX SC250 TRM BLANKETS AS SPECIFIED; BLANKETS MAY BE PLACED DIRECTLY ON SURFACE AS INSTALLED

LEGEND

EX	EXISTING
PROP	PROPOSED
7070	PROP MAJ CONT
	PROP MIN CONT
(7070)	EXIST MAJ CONT
	EXIST MIN CONT
	RIPRAP TYP.
	CDOT CLASS C MATERIAL
	EROSION CONTROL FABRIC
	PROPERTY LINE
	PROP STORM SEWER PIPE
	WARNING SIGN

FOR LOCATING & MARKING GAS, ELECTRIC, WATER & TELEPHONE LINES

FOR BURIED UTILITY INFORMATION
48 HRS BEFORE YOU DIG
CALL 1-800-922-1987

ENGINEERING RECORD DRAWINGS
John P. Schwab Date: 11/17/26
JOHN P. SCHWAB, PE# 29891
FOR AND ON BEHALF OF JPS ENGINEERING, INC.

CLEARWAY, LOT 5
OUTLET STURCTURE POND 1 DETAILS

PROJECT NO. 44-042A
DESIGNED BY: DLM
DRAWN BY: CLP
CHECKED BY: DLM
DATE: 06/13/2023
SCALE: HORIZONTAL: 1"=50' VERTICAL: 1"=5'
SHEET 15 OF 16
BMP02

212 N. WAHSATCH AVE., STE 305
COLORADO SPRINGS, CO 80903
PHONE: 719.955.5485
CIVIL CONSULTANTS, INC.

FOR AND ON BEHALF OF M&S CIVIL CONSULTANTS, INC.

VIRGIL A. SANCHEZ, COLORADO P.E. NO. 37160

STATE OF COLORADO REGISTERED VIRGIL A. SANCHEZ 37160 PROFESSIONAL ENGINEER
06/14/2023

REVISIONS:

NO.	DATE:	BY:	DESCRIPTION:	APPR'D. BY:	DATE:

THE ENGINEER PREPARING THESE PLANS WILL NOT BE RESPONSIBLE, OR LIABLE FOR, UNAUTHORIZED CHANGES TO OR USES OF THESE PLANS. ALL CHANGES TO THE PLANS MUST BE IN WRITING AND MUST BE APPROVED BY THE PREPARER OF THESE PLANS.

CAUTION

File: O:\44042A- Wire Nut\Hammers\Dwg\Const Dwg\BMP\44042A BMP02.dwg Plotstamp: 6/14/2023 3:37 PM

ENGINEERING RECORD DRAWINGS

John P. Schwab Date: 11/17/26

JOHN P. SCHWAB, PE# 29891
FOR AND ON BEHALF OF JPS ENGINEERING, INC.

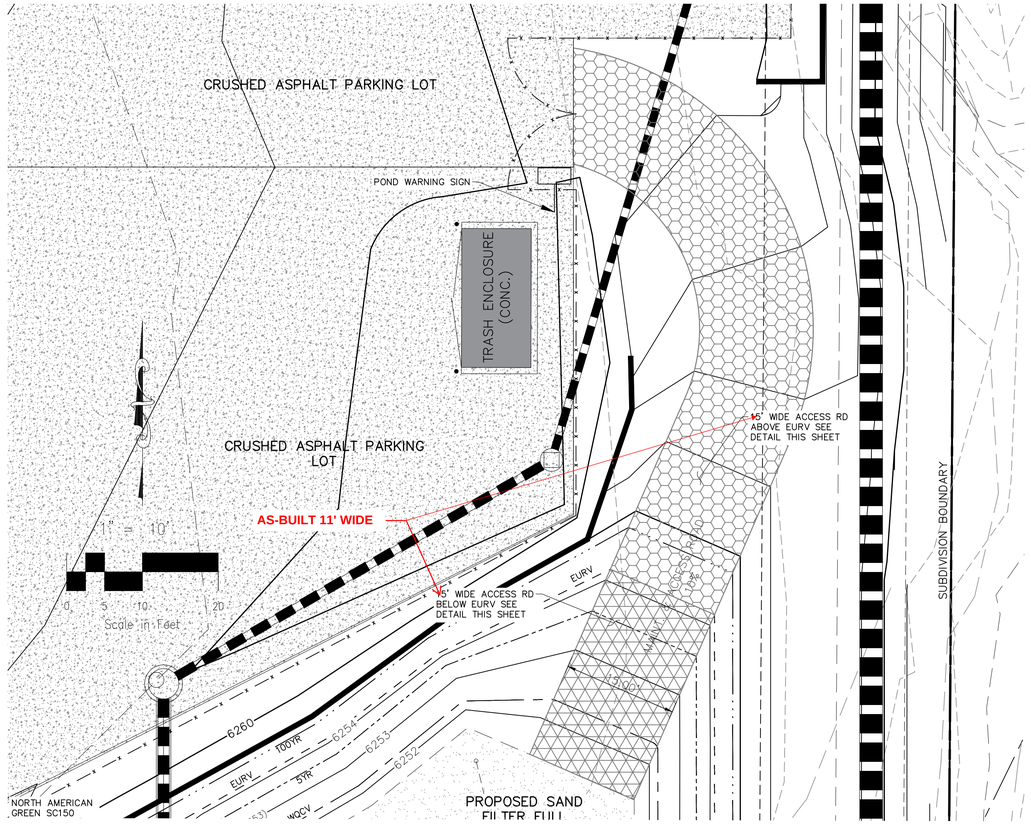

MAINT AND ACCESS ROADWAY PLAN

SCALE: 1" = 10'

POND STILLING BASIN PLAN VIEW

SCALE: 1" = 5'

LEGEND

EX	EXISTING
PROP	PROPOSED
7070	PROP MAJ CONT
	PROP MIN CONT
(7070)	EXIST MAJ CONT
	EXIST MIN CONT
	RIPRAP TYP.
	MAINTENANCE/ACCESS ROAD ABOVE EURV
	MAINTENANCE/ACCESS ROAD BELOW EURV
	PROPERTY LINE
	PROP STORM SEWER PIPE

1" = 5'
0 2.5 5 10
Scale in Feet

FOR LOCATING & MARKING GAS, ELECTRIC, WATER & TELEPHONE LINES
FOR BURIED UTILITY INFORMATION
48 HRS BEFORE YOU DIG
CALL 1-800-922-1987

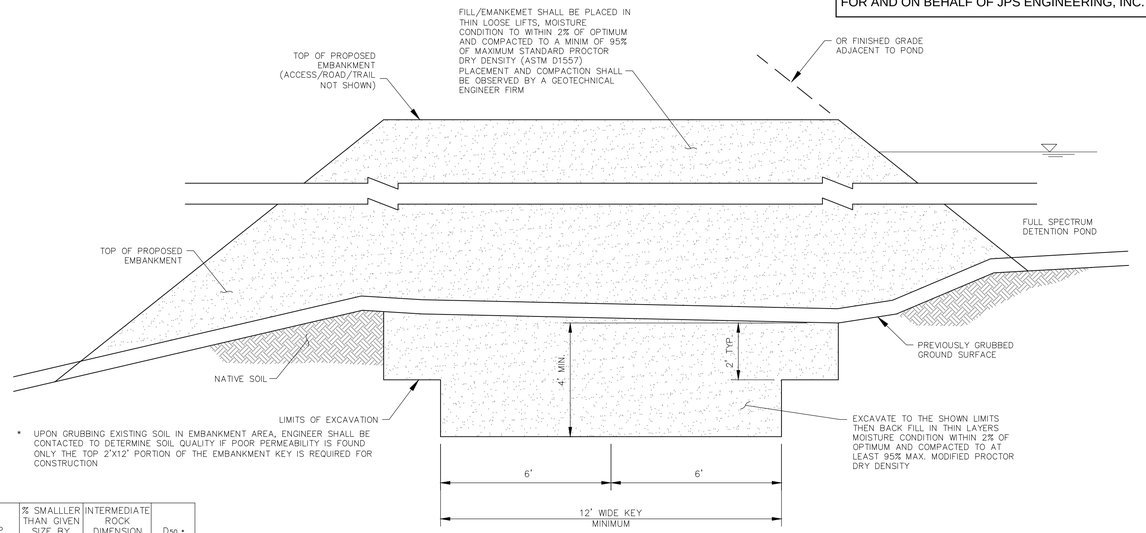

* UPON GRUBBING EXISTING SOIL IN EMBANKMENT AREA, ENGINEER SHALL BE CONTACTED TO DETERMINE SOIL QUALITY IF POOR PERMEABILITY IS FOUND ONLY THE TOP 2'X12' PORTION OF THE EMBANKMENT KEY IS REQUIRED FOR CONSTRUCTION

TYPICAL EMBANKMENT WITH SOIL KEYWAY

NOT TO SCALE

TABLE 1

RIPRAP DESIGNATION	% SMALLER THAN GIVEN SIZE BY WEIGHT	INTERMEDIATE ROCK DIMENSION (INCHES)	D_{50} * (INCHES)
TYPE VL	70–100 50–70 35–50 2–10	12 9 6 2	6
TYPE L	70–100 50–70 35–50 2–10	15 12 9 3	9
TYPE M	70–100 50–70 35–50 2–10	21 18 12 4	12
TYPE H	70–100 50–70 35–50 2–10	30 24 18 6	18
TYPE VH	70–100 50–70 35–50 2–10	41 33 24 9	24

*Dso = MEAN PARTICLE SIZE

REFER TO SECTION 506 RIPRAP OF CDOT SPECIFICIATIONS

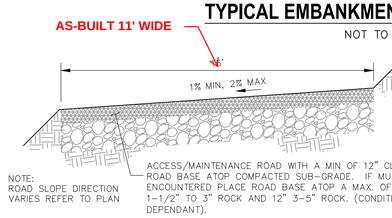

MAINTENANCE & ACCESS ROAD BELOW EURV TYPICAL SECTION

NOT TO SCALE

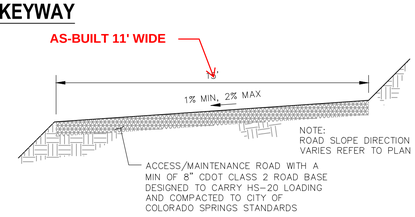

MAINTENANCE & ACCESS ROAD ABOVE EURV TYPICAL SECTION

NOT TO SCALE

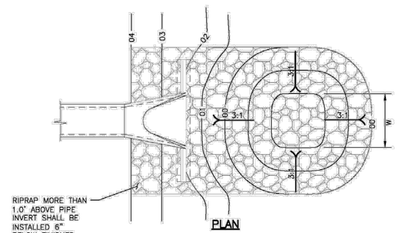

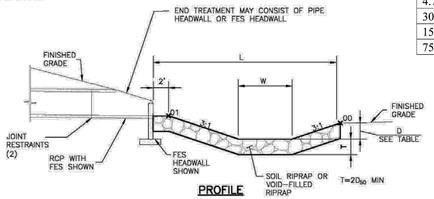

PIPE SIZE OR BOX HEIGHT	D	W*	L
18" – 24"	1'–0"	4'	15'
30" – 36"	1'–6"	6'	20'
42" – 48"	2'–0"	7'	24'
54" – 60"	2'–6"	8'	28'
66" – 72"	3'–0"	9'	32'

* IF OUTLET PIPE IS A BOX CULVERT WITH A WIDTH GREATER THAN W, THEN W = CULVERT WIDTH

Figure 9-37. Low tailwater riprap basin

Table SF-1. Gradation Specifications for CDOT Class C Filter Material
(Source: CDOT Table 703-7)

Sieve Size	Mass Percent Passing Square Mesh Sieves
19.0 mm (3/4")	100
4.75 mm (No. 4)	60 – 100
300 µm (No. 50)	10 – 30
150 µm (No. 100)	0 – 10
75 µm (No. 200)	0 - 3

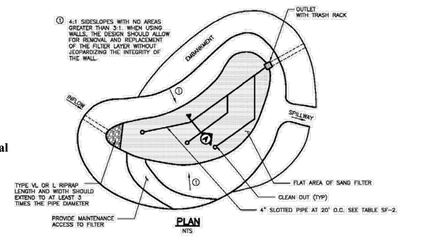

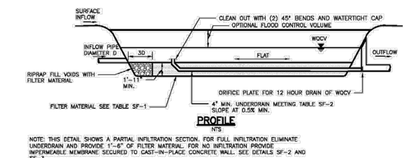

Table SF-2. Dimensions for Slotted Pipe

Pipe Size	Slot Length[1]	Maximum Slot Width	Slot Centers[1]	Open Area[1] (per foot)
4"	1-1/16"	0.032"	0.413"	1.90 in^2
6"	1-3/8"	0.032"	0.516"	1.98 in^2

[1] Some variation in these values is acceptable and is expected from various pipe manufacturers. Be aware that both increased slot length and decreased slot centers will be beneficial to hydraulics but detrimental to the structure of the pipe.

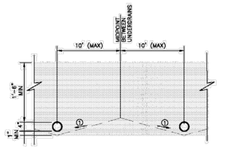

CLEARWAY, LOT 5

OUTLET STURCTURE POND 1 DETAILS

PROJECT NO. 44-042A | DESIGNED BY: DLM | DRAWN BY: CLP | CHECKED BY: DLM | SCALE: HORIZONTAL: 1"=50' VERTICAL: 1"=5' | DATE: 06/13/2023 | SHEET 16 OF 16 | BMP03

212 N. WAHSATCH AVE. STE 305
COLORADO SPRINGS, CO 80903
PHONE: 719.955.5485

CIVIL CONSULTANTS, INC.

FOR AND ON BEHALF OF M&S CIVIL CONSULTANTS, INC.

VIRGIL A. SANCHEZ, COLORADO P.E. NO. 37160
37160 REGISTERED PROFESSIONAL ENGINEER
06/14/2023

REVISIONS:

NO.	DATE:	BY:	DESCRIPTION:	APPVD. BY:	DATE:

THE ENGINEER PREPARING THESE PLANS WILL NOT BE RESPONSIBLE, OR LIABLE FOR, UNAUTHORIZED CHANGES TO OR USES OF THESE PLANS. ALL CHANGES TO THE PLANS MUST BE IN WRITING AND MUST BE APPROVED BY THE PREPARER OF THESE PLANS.

CAUTION

File: O:\44042A-Wire Nut\Hammers\Dwg\Const Dwg\BMP\44042A BMP03.dwg Plotstamp: 6/14/2023 3:38 PM

AS-BUILT SWALE CONVEYING FLOWS FROM EAST FRINGE OF SITE TO EAST BOUNDARY (DP15) PER APPROVED DRAINAGE REPORT

AS-BUILT BERM / RIDGE FOR "BASIN P" PER APPROVED DRAINAGE REPORT

LEGEND

PROPERTY LINE	
EASEMENT LINE	
6260	PROPOSED CONTOUR
6260	EXISTING CONTOUR
49.0	PROPOSED SPOT ELEVATION (FLOWLINE)
74.5	EXIST. SPOT ELEVATION
10%	PROPOSED SLOPE
TW	TOP OF RETAINING WALL
BW	BOTTOM OF RETAINING WALL
CUT / FILL	CUT/FILL DEMARCATION LINE
LOD	LIMIT OF CONSTRUCTION/ DISTURBANCE
	DIRECTION FLOW ARROW
(E)	EXISTING
(P)	PROPOSED
PVT	PRIVATE
AB	AS-BUILT

STA 3+03.39
(P) CDOT TYPE D INLET
GR EL=6259.00
INV IN (30")=6251.21 (W)
INV OUT (36")=6250.71 (S)

FG 6260.00 MATCH EXISTING

EX. LIGHT POLE

15' UTILITY & DRAINAGE EASEMENT

6260.12 FG MATCH EXISTING

8" CONCRETE RETAINING WALL WITH CHAIN LINK FENCE

10' LANDSCAPE SETBACK

25' BUILDING SETBACK

6261.00 FG MATCH EXISTING

(P) 97.7 LF 30" PP STORM PIPE @0.5% SLOPE

(P) 25' TYPE R INLET

(P) CURB & GUTTER (SPILL)

(P) 5' CDOT TYPE R SUMP INLET

(P) 4'W CROSSPAN

GRAVEL

EX. ELECTRIC BOX TO BE RELOCATED

EX. FIRE HYDRANT

(P) 2'W CROSSPAN

30' INGRESS & EGRESS & PUBLIC UTILITY EASEMENT

EX. GAS MAIN

EX. 8" SAN SEWER

E. PLATTE AVENUE (PRIVATE)

S00°00'00"E BASIS OF BEARINGS

300.02'

2" AL CAP WATTS
SAN MH #1002
RIM ELEV.=6265.40'
10" PVC N. I.E. = 6258.90'
10" PVC S. I.E. = 6258.95'

EX. 8" PVC WATER

RELOCATED EX. TELE BOX

EX. ELECTRIC TRANSFORMER

EX. ELECTRIC METER

EX. U/G ELECTRIC

LOT 4

LOT 3

URBAN PROPERTIES LLC
6395 E PLATTE AVE
PARCEL NO: 54180-01-009
ZONE: CS CAD-O
USE: WAREHOUSE/STORAGE

CASSJO LLC
6345 E PLATTE AVE
PARCEL NO: 54180-01-008
ZONE: CS CAD-O
USE: MANUFACTURING

399.58'

BLOCK WALL

(P) TOP OF BERM 6261.38

(P) FENCE

STORM INLET

AS-BUILT 11' WIDE GRAVEL ACCESS ROAD

TRASH ENCLOSURE

BLOCK WALL

STANDARD RIPRAP INSTALLED

AB OUTLET STRUCTURE
RIM ELEV.=6253.86'
18" RCP OUT=6248.04'
FL OF 1'X1.5' OPENING=6251.52'
4" UNDERDRAIN FL IN=6248.18'

12" BERM

S25°39"E

STA 6+01.35
INSTALL 6' DIA TYPE II MH
RIM EL=6254.87
INV IN (36")=6244.85 (N)
INV OUT (36")=6244.55 (SW)

AS-BUILT CONTOURS

36" RCP W/FES
AB FL=6232.58'

AS-BUILT STANDARD RIPRAP INSTALLED

SAND FILTER DETENTION BASIN

18" RCP W/FES
AB FL=6251.09'

24" RCP W/FES
AB FL=6251.33'

SPILLWAY CUTOFF WALL
AB EL=6254.65

SPILLWAY W/ ECB LINING

STORM INLET

CHAIN LINK FENCE

AS-BUILT STANDARD RIPRAP INSTALLED

30" RCP W/FES

STORM INLET

STORM INLET

AS-BUILT HYDRO-SEED ("FLEXTERRA") INSTALLED ON EMBANKMENT (NO ECB NECESSARY)

AS-BUILT STABLE GRASS CHANNEL (NO TRM NECESSARY)

LOT 5
2.97 ACRES
PROPOSED
BUILDING
17,160 S.F.
FF=6263.5

REFER TO SH. GR02 & BALANCE OF GEC PLANS BY M & S FOR OVERALL SITE GRADING & EROSION CONTROL DETAILS

LOT 5
2.97 ACRES

324.65'

321.67'

100'-0"

24'

GRAVEL

N90°00'00"W

N89°47'58"E

S00°00'00"E

400.69'

TEMPORARY CHECK DAMS REMOVED

25' BUILDING SETBACK

6' UTILITY & DRAINAGE EASEMENT

FOUND NO.4 PIN AND RPC LDC

KELNHOFER ENTERPRISES II LLC
6335 E PLATTE AVE
PARCEL NO: 54180-01-007
ZONE: CS CAD-O
USE: WAREHOUSE/STORAGE

CITY OF COLORADO SPRINGS
18-14-65
PARCEL NO: 54180-00-068
ZONE: APD APZ1 AO
USE: POLITICAL SUBDIVISION

20' 0 20' 40'
ORIGINAL SCALE: 1"=20' (24"x36" SHEET)
CONTOUR INTERVAL:1'

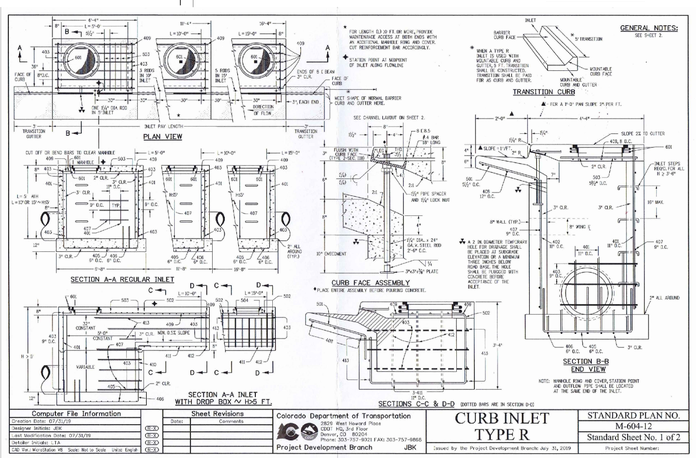

Computer File Information
Division Detail: 07/21/09
Designer Initials: JBK
Last Modification Detail: 07/26/19
Detailer Initials: LLA
CAD Use Verification: MB Scale: Not to Scale Units: English

Sheet Revisions

Date	Comments

Colorado Department of Transportation
2829 West Howard Place
Denver, CO 80204
Phone: 303-757-9011 FAX: 303-757-9868
Project Development Branch JBK

CURB INLET TYPE R

STANDARD PLAN NO. M-604-12
Standard Sheet No. 1 of 2
Project Sheet Number:

Issued by the Project Development Branch: July 31, 2009

POND 1 SAND FILTER - AS-BUILT DETENTION BASIN DATA

WQ WATER SURFACE EL = 6252.23
WQ VOLUME = 0.053 AC-FT
EURV WATER SURFACE EL = 6254.07
EURV VOLUME = 0.248 AC-FT
100-YR WATER SURFACE EL = 6254.2
100-YR VOLUME = 0.264 AC-FT
SPILLWAY CREST EL = 6254.65
TOP OF EMBANKMENT EL = 6256.0
RATIONAL 100-YR INFLOW= 14.8 CFS
MHFD 100-YR INFLOW = 8.0 CFS
MHFD 100-YR RELEASE = 1.7 CFS

AS-BUILT DETENTION BASIN CONTOURS

CONTOUR	AREA (SF)
6252	3583
6253	4450
6254	5395

PPR-22-034

ENGINEERING RECORD DRAWINGS
John P. Schwab Date: 11/17/26
JOHN P. SCHWAB, PE# 29891
FOR AND ON BEHALF OF JPS ENGINEERING, INC.

COLORADO REGISTERED PROFESSIONAL ENGINEER 10/7/26 29891 JOHN P. SCHWAB

BENCHMARK:
MUELLER BOLT ON HYDRANT FLANGE, HYDRANT LOCATED AT THE SW CORNER OF LOT 3. ELEV=6265.48 (NAVD88)

JPS ENGINEERING
19 E. Willamette Ave.
Colorado Springs, CO 80903
PH: 719-477-9429
FAX: 719-471-0766
www.jpsengr.com

CALL UTILITY NOTIFICATION CENTER OF COLORADO
1-800-922-1987
CALL 2 BUSINESS DAYS IN ADVANCE BEFORE YOU DIG, GRADE, OR EXCAVATE FOR THE MARKING OF UNDERGROUND MEMBER UTILITIES.

No.	REVISION	BY	DATE
A	NE STORM REVISIONS	JPS	03/11/26
B	AS-BUILT	JPS	10/07/26

CLEARWAY, LOT 5
6365 E. PLATTE AVENUE, COLORADO SPRINGS, CO

SITE GRADING PLAN

HORZ. SCALE:	1"=20'
VERT. SCALE:	N/A
SURVEYED:	RIDGELINE
CREATED:	03/02/26
PROJECT NO:	012601
DRAWN:	PV
DESIGNED:	JPS
CHECKED:	JPS
LAST MODIFIED:	10/07/26
MODIFIED BY:	PV
SHEET:	C1.1