MAYBERRY PHASE 2

PUD DEVELOPMENT PLAN AND PRELIMINARY PLAN
LOCATED IN THE NW 1/4 OF SECTION 14 & THE NE 1/4 OF SECTION 15, TOWNSHIP 14 SOUTH, RANGE 63 WEST OF THE 6TH P.M.,
EL PASO COUNTY, STATE OF COLORADO.

Steve Schleiker
11/13/2026 12:03:39 PM
Doc $0.00 16 Pages
Rec $43.00
El Paso County, CO
226105515

PROJECT #: PUDSP251

COLORADO LICENSED
REGISTERED
11/13/2026
PROFESSIONAL ENGINEER

PURPOSE AND INTENT

MAYBERRY PHASE 2 IS ENVISIONED AS AN EXTENSION OF MAYBERRY, A NEW TOWN BEING DEVELOPED IN THE FRONT RANGE OF EL PASO COUNTY, COLORADO. GUIDED BY THE PRINCIPLES OF TRADITIONAL NEIGHBORHOOD DESIGN, MAYBERRY IS PLANNED AS A COLLECTION OF COMPLETE, INTERCONNECTED COMMUNITIES THAT TOGETHER CREATE A WALKABLE, CONNECTED, AND ENDURING PLACE.

THIS NEW TOWN IS INTENDED TO FOSTER A STRONG SENSE OF COMMUNITY THROUGH A BALANCED MIX OF HOUSING, PARKS, OPEN SPACES, TRAILS, CIVIC GATHERING AREAS, AND COMMUNITY-SERVING AMENITIES. MAYBERRY IS DESIGNED TO ACCOMMODATE RESIDENTS IN A VARIETY OF HOUSING TYPES, INCLUDING CONVENTIONAL SINGLE-FAMILY HOMES, SMALL-LOT HOMES, PAIRED HOMES, TOWNHOMES, COURTYARD HOMES, BUILD-TO-RENT COMMUNITIES, AND MULTIFAMILY RESIDENCES, CREATING HOUSING OPPORTUNITIES FOR INDIVIDUALS AND FAMILIES IN ALL STAGES OF LIFE.

THE DEVELOPMENT IS ORGANIZED AROUND A NETWORK OF INTERCONNECTED STREETS, PEDESTRIAN PATHWAYS, PARKS, OPEN SPACES, AND PUBLIC GATHERING AREAS DESIGNED TO PRIORITIZE PEOPLE, PROMOTE WALKABILITY, AND STRENGTHEN CONNECTIONS BETWEEN HOMES, RECREATION, SCHOOLS, BUSINESSES, AND COMMUNITY AMENITIES. THE FUTURE COMMUNITY ACTIVITY NODES, PARKS, AND CIVIC SPACES ARE INTENDED TO SERVE AS FOCAL POINTS DISTRIBUTED THROUGHOUT MAYBERRY FOR SOCIAL ACTIVITY, RECREATION, AND COMMUNITY LIFE, REINFORCING MAYBERRY'S IDENTITY AS A VIBRANT AND WELCOMING TOWN.

THE MAYBERRY SKETCH PLAN PROVIDES FLEXIBILITY IN LOT DESIGN, HOUSING TYPES, ARCHITECTURAL EXPRESSION, AND SITE PLANNING WHILE MAINTAINING A COHESIVE COMMUNITY CHARACTER. THIS FLEXIBILITY IS INTENDED TO ENCOURAGE INNOVATION, HOUSING CHOICE, ATTAINABLE HOUSING OPPORTUNITIES, AND THOUGHTFUL RESPONSES TO CHANGING MARKET DEMANDS WHILE PRESERVING THE OVERALL VISION OF A COMPACT, WALKABLE NEW TOWN COMPOSED OF INTERCONNECTED COMMUNITIES, EACH CONTRIBUTING TO THE RURAL CHARACTER, IDENTITY, AND LONG-TERM SUSTAINABILITY OF MAYBERRY.

LANDSCAPING, STREETSCAPE IMPROVEMENTS, ARCHITECTURAL STANDARDS, SIGNAGE, AND OPEN SPACE DESIGN SHALL WORK TOGETHER TO ESTABLISH A DISTINCTIVE COMMUNITY IDENTITY INSPIRED BY THE QUALITIES OF TRADITIONAL SMALL TOWNS: WALKABLE STREETS, MEMORABLE PUBLIC SPACES, HUMAN-SCALED ARCHITECTURE, AND STRONG CONNECTIONS BETWEEN NEIGHBORS AND THE NATURAL ENVIRONMENT.

THE INTENT OF THIS PUD IS TO CONTRIBUTE TO A COMPLETE COMMUNITY THAT SUPPORTS THE LONG-TERM SUCCESS OF MAYBERRY BY PROVIDING RESIDENTS WITH DIVERSE HOUSING OPPORTUNITIES, ACCESSIBLE PARKS AND PUBLIC SPACES, CONNECTED PEDESTRIAN AND TRAIL NETWORKS, AND A SAFE, ATTRACTIVE, AND ENDURING COMMUNITY ENVIRONMENT. EACH COMMUNITY WITHIN MAYBERRY IS INTENDED TO CONTRIBUTE TO THE BROADER VISION OF CREATING A TOWN WHERE DAILY LIFE, RECREATION, CIVIC ENGAGEMENT, AND SOCIAL INTERACTION CAN OCCUR WITHIN A CONNECTED AND WALKABLE ENVIRONMENT.

STATEMENT OF AUTHORITY

AUTHORITY
THIS PUD IS AUTHORIZED BY CHAPTER 4 OF THE EL PASO COUNTY LAND DEVELOPMENT CODE, ADOPTED PURSUANT TO THE COLORADO PLANNED UNIT DEVELOPMENT ACT OF 1972, AS AMENDED.

APPLICABILITY
THE PROVISIONS OF THIS PUD SHALL RUN WITH THE LAND. THE LANDOWNERS, THEIR SUCCESSORS, HEIRS, OR ASSIGNS SHALL BE BOUND BY THIS DEVELOPMENT PLAN, AS AMENDED AND APPROVED BY THE PLANNING AND COMMUNITY DEVELOPMENT DEPARTMENT DIRECTOR OR BOARD OF COUNTY COMMISSIONERS.

ADOPTION
THE ADOPTION OF THIS DEVELOPMENT PLAN SHALL EVIDENCE THE FINDINGS AND DECISIONS OF THE EL PASO COUNTY BOARD OF COUNTY COMMISSIONERS THAT THIS DEVELOPMENT PLAN FOR MAYBERRY PHASE 2 IS IN GENERAL CONFORMITY WITH THE EL PASO COUNTY MASTER PLAN, EL PASO COUNTY POLICY PLAN AND APPLICABLE SMALL AREA PLAN(S); IS AUTHORIZED UNDER THE PROVISION OF THE EL PASO COUNTY LAND DEVELOPMENT CODE; AND THAT THE EL PASO COUNTY LAND DEVELOPMENT CODE AND THIS DEVELOPMENT PLAN COMPLIES WITH THE COLORADO PLANNED UNIT DEVELOPMENT ACT OF 1972, AS AMENDED.

RELATIONSHIP TO COUNTY REGULATIONS
THE PROVISIONS OF THIS DEVELOPMENT PLAN SHALL PREVAIL AND GOVERN THE DEVELOPMENT OF MAYBERRY PHASE 2, PROVIDED, HOWEVER, THAT WHERE THE PROVISIONS OF THIS DEVELOPMENT PLAN DO NOT ADDRESS A PARTICULAR SUBJECT, THE RELEVANT PROVISIONS OF THE EL PASO COUNTY LAND DEVELOPMENT CODE, AS AMENDED AND IN EFFECT AT THE TIME OF THE PUD PLAN APPROVAL (OR OWNER ACKNOWLEDGE THE PUD CHANGES WITH THE CODE), OR ANY OTHER APPLICABLE RESOLUTIONS OR REGULATIONS OF EL PASO COUNTY, SHALL BE APPLICABLE.

TO FURTHER THE MUTUAL INTEREST OF THE RESIDENTS, OCCUPANTS, AND OWNERS OF THE PUD AND OF THE PUBLIC IN THE PRESERVATION OF THE INTEGRITY OF THIS DEVELOPMENT PLAN, THE PROVISIONS OF THIS PLAN RELATING TO THE USE OF LAND AND THE LOCATION OF COMMON OPEN SPACE SHALL RUN IN FAVOR OF EL PASO COUNTY AND SHALL BE ENFORCEABLE AT LAW OR IN EQUITY BY THE COUNTY WITHOUT LIMITATION ON ANY POWER OR REGULATION OTHERWISE GRANTED BY LAW.

WHERE THERE IS MORE THAN ONE PROVISION WITHIN THE DEVELOPMENT PLAN THAT COVERS THE SAME SUBJECT MATTER, THE PROVISION WHICH IS MOST RESTRICTIVE OR IMPOSES HIGHER STANDARDS OR REQUIREMENTS SHALL GOVERN.

THE TOTAL NUMBER OF DWELLINGS OR THE TOTAL COMMERCIAL, BUSINESS, OR INDUSTRIAL INTENSITY SHOWN ON THE DEVELOPMENT PLAN FOR DEVELOPMENT WITHIN THE SPECIFIED PLANNING AREAS IS THE MAXIMUM DEVELOPMENT REQUESTED FOR PLATTING OR CONSTRUCTION (PLUS ANY APPROVED DENSITY TRANSFERS). THE ACTUAL NUMBER OF DWELLINGS OR LEVEL OF DEVELOPMENT MAY BE LESS DUE TO SUBDIVISION OR SITE DEVELOPMENT PLAN REQUIREMENTS, LAND CARRYING CAPACITY, OR OTHER REQUIREMENTS OF THE BOARD OF COUNTY COMMISSIONERS.

AT THE TIME OF ANY FINAL PLAT APPLICATION, THE APPLICANT SHALL PROVIDE A SUMMARY OF THE DEVELOPMENT, TO DATE, TO PLANNING AND COMMUNITY DEVELOPMENT DEPARTMENT, IN ORDER TO ASSURE MAXIMUM DEVELOPMENT LIMITS ARE NOT EXCEEDED.

LEGAL DESCRIPTION

ALL OF TRACTS A, K AND O, MAYBERRY, COLORADO SPRINGS FILING NO. 1, A SUBDIVISION OF LAND IN THE NORTHWEST QUARTER OF SECTION 14 AND THE NORTHEAST QUARTER OF SECTION 15, TOWNSHIP 14 SOUTH, RANGE 63 WEST OF THE 6TH PRINCIPAL MERIDIAN, EL PASO COUNTY, COLORADO, THE PLAT OF SAID SUBDIVISION RECORDED DECEMBER 23, 2020 AS RECEPTION NUMBER 220714655 IN THE OFFICE OF THE CLERK AND RECORDER OF EL PASO COUNTY, COLORADO;

AND

UNPLATTED LAND IN SAID NORTHWEST AND NORTHEAST QUARTERS, LYING BETWEEN AND ADJOINING THE WEST LINE OF SAID TRACT O AND THE EASTERLY LINE OF TRACT N, SAID MAYBERRY, COLORADO SPRINGS FILING NO. 1, ALSO LYING NORTH OF THAT EASTERLY/WESTERLY SEGMENT OF THE EASTERLY LINE OF SAID TRACT N THAT INTERSECTS THE EAST LINE OF SAID NORTHEAST 1/4 OF SAID SECTION 15 AND EXTENDED EASTERLY TO THE SOUTHEAST CORNER OF THE RIGHT-OF-WAY OF POSITIVE PLACE (FORMERLY KNOWN AS MAYBERRY DRIVE) ESTABLISHED BY SAID PLAT;

AND

THE RIGHT-OF-WAYS OF MAYBERRY DRIVE (FORMERLY KNOWN AS NEW LOG ROAD) AND VILLAGE MAIN STREET LYING IN SAID NORTHWEST AND NORTHEAST QUARTERS, ESTABLISHED BY SAID PLAT AND ADJOINING THE EASTERLY, WESTERLY AND SOUTHERLY LINES OF SAID TRACT A AND ADJOINING THE WESTERLY AND SOUTH LINES OF SAID TRACT K; ALL TOGETHER MORE PARTICULARLY DESCRIBED AS FOLLOWS:

BASIS OF BEARINGS: THE NORTH LINE OF THE NORTHWEST QUARTER OF SECTION 14, TOWNSHIP 14 SOUTH, RANGE 63 WEST OF THE SIXTH PRINCIPAL MERIDIAN, BEING MONUMENTED AT THE NORTHWEST CORNER BY A 3-1/2" ALUMINUM CAP STAMPED "PLS 1164" AND AT THE NORTH QUARTER CORNER BY A 2" ALUMINUM CAP STAMPED "PLS 11624" ASSUMED TO BEAR SOUTH 89° 44' 49' EAST;

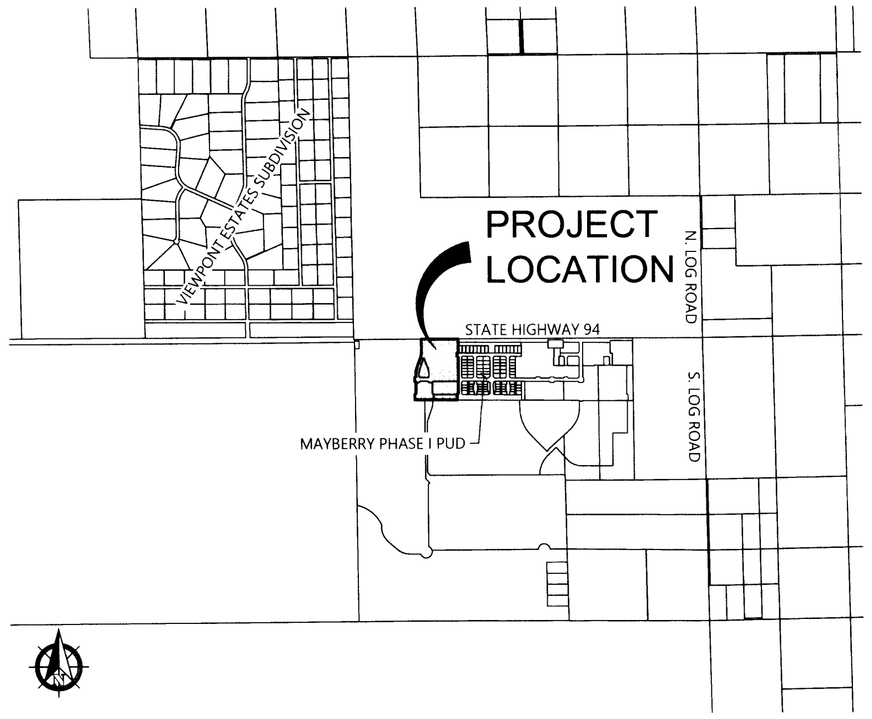

VICINITY MAP
SCALE 1" = 2,000'

LEGAL DESCRIPTION (CONT.)

BEGINNING AT THE NORTHEAST CORNER OF SAID TRACT K, THENCE SOUTHERLY ON THE EASTERLY LINE OF SAID TRACT K THE FOLLOWING 4 COURSES AND DISTANCES:

1. SOUTH 00° 31' 01" WEST A DISTANCE OF 201.27 FEET;
2. NORTH 89° 28' 59" WEST A DISTANCE OF 20.79 FEET;
3. SOUTH 00° 00' 00" EAST A DISTANCE OF 60.00 FEET;
4. SOUTH 44° 44' 29" EAST A DISTANCE OF 31.25 FEET;

THENCE ON THE EAST LINE OF SAID TRACT K AND ITS SOUTHERLY EXTENSION AND ON THE EAST LINE OF SAID TRACT O, SOUTH 00° 00' 00" EAST A DISTANCE OF 667.76 FEET TO THE MOST NORTHERLY SOUTHEAST CORNER OF SAID TRACT O;

THENCE SOUTH 45° 15' 31" WEST A DISTANCE OF 30.97 FEET ON THE SOUTHEAST LINE OF SAID TRACT O TO THE MOST SOUTHERLY SOUTHEAST CORNER OF SAID TRACT O;

THENCE ON THE WEST LINE OF SAID POSITIVE PLACE RIGHT-OF-WAY SOUTH 00° 31' 01" WEST A DISTANCE OF 90.00 FEET;

THENCE DEPARTING THE WEST RIGHT-OF-WAY LINE THE FOLLOWING EIGHT (8) COURSES:

1. NORTH 89° 28' 59" WEST A DISTANCE OF 447.61 FEET;
2. SOUTH 45° 15' 31" WEST A DISTANCE OF 14.08 FEET;
3. NORTH 89° 29' 00" WEST A DISTANCE OF 85.99 FEET;
4. NORTH 44° 44' 29" WEST A DISTANCE OF 14.22 FEET;
5. NORTH 89° 28' 59" WEST A DISTANCE OF 142.00 FEET;
6. SOUTH 45° 15' 30" WEST A DISTANCE OF 14.09 FEET;
7. NORTH 89° 29' 00" WEST A DISTANCE OF 85.99 FEET;
8. NORTH 44° 44' 29" WEST A DISTANCE OF 14.29 FEET, TO A POINT ON THE EASTERLY LINE OF TRACT N, SAID MAYBERRY;

THENCE ON THE EASTERLY LINE OF SAID TRACT N, NORTH 00° 17' 11" WEST A DISTANCE OF 74.95 FEET;

THENCE SOUTH 89° 28' 59" EAST A DISTANCE OF 0.43 FEET;

THENCE NORTH 45° 15' 30" EAST A DISTANCE OF 30.97 FEET, TO A POINT ON THE SOUTHERLY EXTENTION OF THE EASTERLY LINE OF SAID TRACT N;

THENCE ON THE EASTERLY LINES OF SAID TRACT N, THE FOLLOWING NINE (9) COURSES:

1. NORTH 00° 00' 00" EAST A DISTANCE OF 216.01 FEET;
2. NORTH 44° 44' 29" WEST A DISTANCE OF 31.25 FEET;
3. NORTH 00° 00' 00" EAST A DISTANCE OF 70.00 FEET;
4. NORTH 45° 15' 31" EAST A DISTANCE OF 30.97 FEET;
5. NORTH 00° 00' 00" EAST A DISTANCE OF 31.13 FEET TO A POINT OF TANGENT CURVE;
6. NORTHERLY, ALONG A CURVE, CONCAVE TO THE SOUTHEAST, HAVING A CENTRAL ANGLE OF 19° 58' 22", A RADIUS OF 435.00 FEET, AN ARC DISTANCE OF 151.64 FEET; A CHORD BEARING NORTH 09° 59' 11" EAST, AND A CHORD DISTANCE OF150.87 FEET TO A POINT OF TANGENCY;
7. NORTH 19° 58' 22" EAST, 166.93 FEET TO A POINT OF TANGENT CURVE;
8. NORTHERLY, ALONG A CURVE, CONCAVE TO THE NORTHEAST, HAVING A CENTRAL ANGLE OF 19° 57' 13", A RADIUS OF 365.00 FEET, AN ARC LENGTH OF 127.11 FEET, A CHORD BEARING OF NORTH 09° 59' 45" EAST, AND ACHORD DISTANCE OF 126.47 FEET TO A POINT OF TANGENCY;
9. THENCE NORTH 00° 01' 09" EAST A DISTANCE OF 173.93 FEET, TO A POINT ON THE SOUTHERLY RIGHT-OF-WAY OF HIGHWAY 94;

THENCE ON SAID SOUTHERLY RIGHT-OF-WAY LINE, SOUTH 89° 28' 59" EAST A DISTANCE OF 697.84 FEET, TO THE **POINT OF BEGINNING**;

CONTAINING A CALCULATED AREA OF 814,561 SQUARE FEET OR 18.70 ACRES, MORE OR LESS.

LAND OWNER CERTIFICATION

IN WITNESS WHEREOF: Roy Randolph Goodson
HAS EXECUTED THESE PRESENTS THIS 12th DAY OF November 2026 A.D. ,
A COLORADO LIMITED LIABILITY COMPANY
AUTHORIZED AGENT, MANAGER

STATE OF COLORADO)
COUNTY OF El Paso)SS.
SIGNED BEFORE ME ON Nov 12, 2026
BY Roy Randolph Goodson (NAME(S) OF INDIVIDUAL(S) MAKING STATEMENT).

(TITLE OF OFFICE)

(COMMISSION EXPIRATION) 4/5/2030

VALERIE L TAPIA-RENFRO
NOTARY PUBLIC
STATE OF COLORADO
NOTARY ID 20064021605
MY COMMISSION EXPIRES 04/05/2030

BOARD OF COUNTY COMMISSIONERS CERTIFICATION

THIS PUD DEVELOPMENT PLAN AND PRELIMINARY PLAN FOR MAYBERRY PHASE 2 WAS APPROVED FOR FILING BY THE EL PASO COUNTY, COLORADO BOARD OF COUNTY COMMISSIONERS ON THE 12th DAY OF NOV, 2025 SUBJECT TO ANY NOTES SPECIFIED HEREON AND ANY CONDITIONS INCLUDED IN THE RESOLUTION OF APPROVAL.

CHAIR, BOARD OF COUNTY COMMISSIONERS — DATE 11/12/2026

DIRECTOR, PLANNING & COMMUNITY DEVELOPMENT DEPARTMENT — DATE 11/12/2026

CLERK AND RECORDER CERTIFICATION

STATE OF COLORADO)
)SS.
EL PASO COUNTY)

I HEREBY CERTIFY THAT THIS PLAN WAS FILED IN MY OFFICE ON THIS _____(DAY) OF _____ (MONTH), 20___ AT _____ O'CLOCK A.M./P.M. AND WAS RECORDED PER RECEPTION NO. _____.

EL PASO COUNTY CLERK AND RECORDER

SURVEYOR CERTIFICATION

I John Robert McGehee, A DULY REGISTERED PROFESSIONAL LAND SURVEYOR IN THE STATE OF COLORADO, DO HEREBY CERTIFY THAT THIS PLAT TRULY AND CORRECTLY REPRESENTS THE RESULTS OF A SURVEY MADE ON DATE OF SURVEY, BY ME OR UNDER MY DIRECT SUPERVISION AND THAT ALL MONUMENTS EXIST AS SHOWN HEREON; THAT MATHEMATICAL CLOSURE ERRORS ARE LESS THAN 1:10,000 ; AND THAT SAID PLAT HAS BEEN PREPARED IN FULL COMPLIANCE WITH ALL APPLICABLE LAWS OF THE STATE OF COLORADO DEALING WITH MONUMENTS, SUBDIVISION, OR SURVEYING OF LAND AND ALL APPLICABLE PROVISIONS OF THE EL PASO COUNTY LAND DEVELOPMENT CODE.

I ATTEST THE ABOVE ON THIS 10 DAY OF November, 2026

COLORADO REGISTERED PLS # 38219

COLORADO REGISTERED
JOHN ROBERT MCGEHEE
38219
11-10-2026
PROFESSIONAL LAND SURVEYOR

SHEET LIST TABLE

SHEET NUMBER	SHEET TITLE
1	COVER SHEET
2	DESIGN STANDARDS
3	SURVEY - PUD 2 BOUNDARY
4	SURVEY - TRACT K BOUNDARY DETAIL
5	SURVEY - TRACT K BOUNDARY DETAIL
6	SURVEY - PARKS BOUNDARY DETAIL
7	TRACT SUMMARY
8	OVERALL SITE PLAN
9	ROAD CROSS SECTIONS I
10	ROAD CROSS SECTIONS II
11	ROAD CROSS SECTIONS III
12	TRACT K SITE PLAN
13	LOT DETAILS
14	PARKS SITE PLAN
15	OVERALL UTILITY PLAN
16	OVERALL GRADING PLAN

CONTACT LIST

DEVELOPER	CIVIL ENGINEER	SURVEYOR	PLANNING AND LANDSCAPING
MAYBERRY COMMUNITIES, LLC	LJA	LJA	LJA
22108 CATTLEMAN RUN CALHAN, CO 80808 719-922-2181 CONTACT: SCOTT SOUDERS, PE	1765 WEST 121ST AVENUE, SUITE 300 WESTMINSTER, CO 80234 303-421-4224 CONTACT: ALAINA KNEEBONE MARLER, PE	4700 SYRACUSE STREET, SUITE 500 DENVER, CO 80237 303-390-8510 CONTACT: MARK HALL, PLS	1125 KELLY JOHNSON BOULEVARD, SUITE 361 COLORADO SPRINGS, CO 80920 303-421-4224 CONTACT: KATIE CARLEO, AICP
STATE HIGHWAY	WATER/WASTEWATER	GAS DEPARTMENT	ELECTRIC DEPARTMENT
COLORADO DEPARTMENT OF TRANSPORATION, REGION 2	ELLICOTT UTILITIES COMPANY, LLC	BLACK HILLS ENERGY	MOUNTAIN VIEW ELECTRIC ASSOCIATION, INC.
5615 WILLS BLVD. PUEBLO, CO 81008 MR. ART GONZALES (REFERENCE CDOT ACCESS PERMITS NO. 218053 & 218054)	PO BOX 64257 COLORADO SPRINGS, CO 80962 719-602-1876 CONTACT: CUSTOMER SERVICE	198 COUNTY LINE ROAD PALMER LAKE, CO 80133 719-502-5594 CONTACT: MARCUS HENDERSON	11140 E. WOODMEN ROAD FALCON, CO 80831 719-494-2593 CONTACT: JONATHAN E. TYRA

LJA
1765 W. 121st Avenue
Suite 300
Westminster, CO 80234
303-421-4224 • www.lja.com

No.	Rev. Date:	Revision Type:
1		
2		
3		
4		
5		
6		

Designed: WCK
Prepared: WCK
Approved: AKM
Sheet: 1 of 16
Date: September 18, 2026
Job No.: 8787-0001
Scale Horiz: N/A
Scale Vert: N/A

Proj. Name: Mayberry Phase 2
Location: El Paso County
Plan Set: PUD Development Plan & Preliminary Plan
Sheet Name: COVER SHEET

Client: Mayberry Communities, LLC
Address: 22108 Cattlemen Run Calhan, CO 80808
Contact: Scott Souders

811 Know what's below. Call before you dig.

No. 1

S:\LAND\SW\WEST-CO\8787 - MAYBERRY\8787-0001\PLA\01 ENTITLEMENTS\PUD\SUBMITTAL 4\2026.09.17-MAYBERRY-PUD 2-COVER PRINTED ON: 9/17/2026 4:08 PM

MAYBERRY PHASE 2

226105515
11/13/2026

PUD DEVELOPMENT PLAN AND PRELIMINARY PLAN
LOCATED IN THE NW 1/4 OF SECTION 14 & THE NE 1/4 OF SECTION 15, TOWNSHIP 14 SOUTH, RANGE 63 WEST OF THE 6TH P.M.,
EL PASO COUNTY, STATE OF COLORADO.

COLORADO LICENSED
MATTHEW J. MAYO
35781
PROFESSIONAL ENGINEER
10/10/2025

GENERAL PROVISIONS

1. ALL PUBLIC STREETS SHALL BE CONSTRUCTED TO EL PASO COUNTY STANDARDS, DEDICATED TO EL PASO COUNTY FOR AND UPON ACCEPTANCE BY EL PASO COUNTY, AND SHALL BE MAINTAINED BY EL PASO COUNTY DEPARTMENT OF TRANSPORTATION EXCEPT LANDSCAPING AS INDICATED IN NOTE #2.

2. MAYBERRY PUD PHASE 2, FILING 2, TRACT I (GRIFFITH SQUARE) LANDSCAPE FEATURES, PARKS, AND TRAILS SHALL BE OWNED BY MAYBERRY METROPOLITAN DISTRICT #3 AND MAINTAINED BY MAYBERRY METROPOLITAN DISTRICT #1. ALL OTHER LANDSCAPE ENTRY FEATURES, OPEN SPACE TRACTS, PARKS AND TRAILS SHALL BE OWNED BY MAYBERRY METROPOLITAN DISTRICT #4 AND MAINTAINED BY MAYBERRY METROPOLITAN DISTRICT #1.

3. NO RESIDENTIAL LOTS SHALL HAVE ACCESS TO STATE HIGHWAY 94, MAYBERRY DRIVE, AND VILLAGE MAIN STREET.

4. PUBLIC UTILITY/DRAINAGE EASEMENTS SHALL BE PROVIDED ON ALL LOTS. IT SHALL BE NOTED THAT NO GROUND-LEVEL ENCROACHMENTS ARE PERMITTED IN THE EASEMENTS, INCLUDING BUT NOT LIMITED TO WINDOW WELLS, AWNINGS, CHIMNEYS, ETC.:
   A. SIDE: THREE (3) FEET.
   B. TRACT A SHALL BE A NON-EXCLUSIVE WATER, SANITARY, AND DRAINAGE EASEMENT IN ITS ENTIRETY.
   C. TRACT C SHALL BE A NON-EXCLUSIVE WATER, SANITARY, AND DRAINAGE EASEMENT IN ITS ENTIRETY.
   D. TRACT E SHALL BE A NON-EXCLUSIVE WATER, SANITARY, AND DRAINAGE EASEMENT IN ITS ENTIRETY.

5. PUBLIC UTILITY EASEMENTS SHALL BE PROVIDED WHERE SHOWN AND FINALIZED WITH THE FINAL PLAT.
   A. ALLEY SIDE WILL HAVE A TOTAL OF FIVE (5) FEET WITH TWO AND A HALF (2.5) FEET IN THE LOT AND TWO AND A HALF (2.5) FEET IN THE TRACT FOR BOTH REAR AND FRONT-LOADED HOMES.
   B. FRONT-LOADED HOMES WILL HAVE A REAR UTILITY EASEMENT OF THREE (3) FEET FOR A TOTAL OF SIX (6) FEET WITH EASEMENTS BETWEEN ADJACENT LOTS.
   C. REAR-LOADED HOMES WILL HAVE A THREE (3) FOOT EASEMENT WITHIN THE FRONT OF THE LOT.
   D. EASEMENTS WILL ALSO BE REVIEWED AND SUBJECT TO CHANGE DURING THE FINAL CONSTRUCTION PLAN AND FINAL PLAT PROCESS WHERE NECESSARY TO PROVIDE ACCESS FOR ROUTING AND EQUIPMENT.

6. ALL OPEN SPACE/TRAIL/LANDSCAPE TRACTS SHALL BE LIMITED TO NON-MOTORIZED USE ONLY, EXCEPT FOR MAINTENANCE AND EMERGENCY VEHICLES.

7. DEVELOPMENT OF THE PROPERTY SHALL BE IN ACCORDANCE WITH THE OVERALL PUD DEVELOPMENT PLAN APPROVAL. MINOR MODIFICATIONS MAY BE SUBJECT TO THE LIMITATIONS CONTAINED IN THE EL PASO COUNTY LAND DEVELOPMENT CODE.

8. MAYBERRY PHASE 2 SHALL BE LIMITED TO A TOTAL MAXIMUM DENSITY AS ILLUSTRATED ON THE PLAN.

9. THE EL PASO COUNTY REGIONAL TRAIL ALIGNMENT SHOWN ON THIS PLAN REFLECTS THE APPROVED REALIGNMENT AS SHOWN ON THE SKETCH PLAN AND PER COORDINATION COMPLETED BETWEEN THE APPLICANT AND EL PASO COUNTY PARKS STAFF.

10. MAINTENANCE REQUIREMENTS FOR THE NON-STANDARD AREAS WILL BE ADDRESSED WITH FUTURE RIGHT-OF-WAY LICENSING AGREEMENTS.

FLOODPLAIN NOTE

THIS PROPERTY IS NOT LOCATED WITHIN A DESIGNATED FEMA FLOODPLAIN AS DETERMINED BY THE FLOOD INSURANCE RATE MAP, EL PASO COUNTY AND INCORPORATED AREAS, PANEL 810 OF 1300, MAP NUMBER 08041C0810G, DATED DECEMBER 7, 2018.

SOILS NOTE

A GEOLOGIC HAZARDS EVALUATION AND PRELIMINARY GEOTECHNICAL INVESTIGATION, MAYBERRY - 540 ACRE SITE, STATE HIGHWAY 94 AND LOG ROAD, EL PASO COUNTY, COLORADO DATED MARCH 13, 2023, AND A LETTER TITLED, RESPONSE TO REVIEW COMMENTS DATED AUGUST 19, 2026, IS INCLUDED WITHIN THE SUBMITTAL PACKAGE. GEOLOGIC HAZARDS THAT PRECLUDE THE PROPOSED DEVELOPMENT WERE NOT IDENTIFIED. COLLAPSE PRONE SOILS WERE IDENTIFIED IN ONE SUBSURFACE SAMPLE BUT COULD BE ENCOUNTERED ANYWHERE WITHIN PUD 2. MITIGATION OF COLLAPSE PRONE SOILS CAN BE ACCOMPLISHED BY OVER-EXCAVATION AND RECOMPACTION.

SITE DATA

TAX ID NUMBER:	3414201024, 3414205001, 3400000472, 3414206001, 3400000473
TOTAL AREA:	18.70 AC
DEVELOPMENT SCHEDULE:	MAYBERRY, COLORADO SPRINGS PUD PHASE 1, FILING 1, TRACT K WILL BE DEVELOPED 2026/2027 DEVELOPMENT OF THE BALANCE OF THE SITE WILL BE MARKET DEMAND DRIVEN
SKETCH PLAN:	MAYBERRY COMMUNITIES SKETCH PLAN (SKP236) - BOCC APPROVED 5/9/2025
CURRENT ZONING:	PUD
CURRENT USE:	VACANT

TRACT K, FUTURE MAYBERRY PHASE 2 FILING NO. 1

TOTAL AREA:	8.31 AC
PLANNED USE:	SINGLE FAMILY ATTACHED AND SINGLE FAMILY DETACHED RESIDENTIAL
NUMBER OF LOTS:	92 SINGLE FAMILY ATTACHED LOTS 6 SINGLE FAMILY DETACHED LOTS
AVERAGE LOT SIZE:	2,135 SF
MINIMUM LOT SIZE:	2,030 SF
MAX. LOT COVERAGE:	75% SINGLE FAMILY ATTACHED 75% SINGLE FAMILY DETACHED
MAX. BUILDING HEIGHT:	35'
PLANNED USE:	COMMUNITY CENTER
NUMBER OF LOTS:	1 CLUBHOUSE & POOL LOT
LOT SIZE:	23,366 SF
MAX. LOT COVERAGE:	75%
MAX. BUILDING HEIGHT:	50'
GROSS RES. DENSITY:	11.79 DU/AC
R.O.W.:	N/A
TOTAL TRACT AREA:	2.98 AC
PARKING	
REQUIRED:	196 SPACES (2/UNIT SINGLE-FAMILY)
PROVIDED:	196 SPACES (GARAGE)
GUEST REQUIRED:	23 SPACES (1 PER 4 UNITS SINGLE-FAMILY ATTACHED)
GUEST PROVIDED:	23 SPACES (SURFACE), 3 OF WHICH ACCESSIBLE

GRIFFITH SQUARE, MAYBERRY COURTS, AND ENTRY PARK, FUTURE MAYBERRY PHASE 2

TOTAL AREA:	10.54 AC
PLANNED USE:	PARK & PUBLIC ROADS
R.O.W.:	2.33 AC
TOTAL TRACT AREA:	4.88 AC
MAX. BUILDING HEIGHT:	25'

OVERALL OPEN SPACE

REQUIRED:	1.87 AC (10% OF 18.70 AC)
USABLE REQUIRED:	0.47 AC (25% OF 1.87 AC REQUIRED)
PROVIDED:	5.99 AC
USABLE PROVIDED:	5.99 AC

DEVELOPMENT STANDARDS AND GUIDELINES

OVERALL STANDARDS AND GUIDELINES

1. THESE STANDARDS SHALL APPLY TO ALL PROPERTY CONTAINED IN MAYBERRY PHASE 2 PLANNED UNIT DEVELOPMENT (PUD). THESE GUIDELINES SHALL GOVERN THE LAND USE, THE DIMENSIONAL ZONING REGULATIONS, AND ALONG WITH THE COVENANTS, THE REGULATORY PROCESS FOR DETERMINING COMPLIANCE WITH THE PROVISIONS OF THE MAYBERRY PHASE 2 PUD.

2. MAYBERRY PHASE 2 PUDSP (MAYBERRY PHASE 2) IS A CONTINUATION OF DEVELOPMENT GUIDELINES ASSOCIATED WITH MAYBERRY PHASE 1 PUDSP.

3. SPECIFIC GUIDELINES WITHIN MAYBERRY PHASE 2 WILL CONTAIN DEVELOPMENT STANDARDS ASSOCIATED WITH PREVIOUSLY PLATTED TRACT "A", TRACT "K" AND TRACT "O" OF MAYBERRY, COLORADO SPRINGS FILING NO. 1, RECEPTION NO. 14655, ALONG WITH A PORTION OF UNPLATTED LAND ADJACENT TO TRACT "O".

4. THE PRELIMINARY PLAN, PUD DEVELOPMENT PLAN, AND THE FINAL PLAT ESTABLISH THE LOT SIZES FOR EACH LOT.

5. STREETS WITHIN MAYBERRY PHASE 2 PROVIDE GENERAL VEHICULAR CIRCULATION THROUGHOUT THE DEVELOPMENT. EXISTING STREETS IDENTIFIED AS MAYBERRY DRIVE (FORMERLY NEW LOG ROAD), VILLAGE MAIN STREET, AND POSITIVE PLACE (FORMERLY MAYBERRY DRIVE), ALONG WITH THE PROPOSED BUILD OUT AND EXTENSION OF SAID ROADS SHALL BE PUBLICLY OWNED AND MAINTAINED. CONSTRUCTION WILL BE TO EL PASO COUNTY STANDARDS EXCEPT FOR DEVIATIONS APPROVED SEPARATELY BY ENGINEERING DIVISION OF DEVELOPMENT SERVICES. SIDEWALKS SHALL BE PROVIDED ON BOTH SIDES OF ALL PUBLICLY OWNED STREETS ILLUSTRATED ON THIS PLAN UNLESS SPECIFICALLY EXCLUDED.

6. COVENANTS FOR MAYBERRY PHASE 2 WILL BE CREATED BY SEPARATE DOCUMENTS PRIOR TO PLAT RECORDING OF MAYBERRY PHASE 2, FILING 1. THE COVENANTS ESTABLISH RULES AND REGULATIONS FOR THE PROPERTY WITHIN THE SUBDIVISIONS AND ESTABLISH THE GOVERNANCE MECHANISM OF THE SUBDIVISION, INCLUDING THE CREATION OF THE ARCHITECTURAL CONTROL COMMITTEE.

7. PERMITTED USES WITHIN ALL AREAS OF THE MAYBERRY PHASE 2 PUD RESIDENTIAL AREAS INCLUDE: MAIL KIOSKS, TRAIL CORRIDORS, DEVELOPMENT SIGNAGE, PEDESTRIAN PATHS, WALKWAYS, PUBLIC SIDEWALKS, FENCING, UTILITIES, STORM WATER FACILITIES, DRAINAGE IMPROVEMENTS, OPEN SPACE AND LANDSCAPE IMPROVEMENTS, PARKS AND ASSOCIATED PARK RELATED EQUIPMENT, AND PUBLIC AND PRIVATE ROADS.

8. PRIOR TO BUILDING PERMIT APPROVAL, A FINAL SUBDIVISION PLAT SHALL BE APPROVED BY THE EL PASO COUNTY PLANNING & COMMUNITY DEVELOPMENT DEPARTMENT, AND THE PLAT MUST BE RECORDED.

9. NOTWITHSTANDING ANYTHING DEPICTED IN THIS PLAN IN WORDS OR GRAPHIC REPRESENTATION, ALL DESIGN AND CONSTRUCTION RELATED TO ROADS, STORM DRAINAGE AND EROSION CONTROL SHALL CONFORM TO THE STANDARDS AND REQUIREMENTS OF THE MOST RECENT VERSION OF THE RELEVANT ADOPTED EL PASO COUNTY STANDARDS, INCLUDING THE LAND DEVELOPMENT CODE (LDC), THE ENGINEERING CRITERIA MANUAL, THE DRAINAGE CRITERIA MANUAL (DCM), AND DCM VOLUME 2. ANY DEVIATIONS FROM THESE STANDARDS MUST BE SPECIFICALLY REQUESTED AND APPROVED IN WRITING TO BE ACCEPTABLE. THE APPROVAL OF THIS PUD PLAN DOES NOT IMPLICITLY ALLOW ANY DEVIATIONS OR WAIVERS THAT HAVE NOT BEEN OTHERWISE APPROVED THROUGH THE DEVIATION APPROVAL PROCESS.

10. DEVELOPMENT OF THE PROPERTY WILL BE IN ACCORDANCE WITH THE MOST RECENT VERSION OF THE EL PASO COUNTY LAND DEVELOPMENT CODE FOR PUD ZONING, AND THE CRITERIA ESTABLISHED BY THIS PUD DEVELOPMENT PLAN.

11. LANDSCAPE IMPROVEMENTS AND MAINTENANCE SHALL BE THE RESPONSIBILITY OF MAYBERRY METRO DISTRICT 1. THE METROPOLITAN DISTRICT SHALL HAVE ACCESS TO ALL TRACTS FOR THE PURPOSE OF MAINTENANCE AND ACCESS NEEDS.

RESIDENTIAL STANDARDS AND GUIDELINES

1. PRINCIPAL USE(S) SHALL BE LIMITED TO ONE (1) SINGLE FAMILY ATTACHED OR SINGLE FAMILY DETACHED RESIDENCE PER LOT.

2. PERMITTED USES WITHIN THE MAYBERRY PHASE 2 PUD RESIDENTIAL AREAS INCLUDE: SINGLE FAMILY ATTACHED AND SINGLE FAMILY DETACHED RESIDENTIAL HOMES.

3. ALLOWED ACCESSORY USES AND BUILDINGS:
   A. RESIDENTIAL HOME OCCUPATION AS DEFINED BY THE LAND DEVELOPMENT CODE MEETING ALL REQUIREMENTS AND CONDITIONS CONTAINED THEREIN.
   B. DEVELOPMENT REQUIREMENTS FOR ACCESSORY BUILDINGS SHALL MATCH DEVELOPMENT STANDARDS FOR SPECIFIC LOT TYPES.
   C. EACH STRUCTURE WILL BE DESIGNED AND DEVELOPED AT ITS RESPECTIVE SITE DEVELOPMENT PLAN PROCESS.

4. MODEL HOME/ SUBDIVISION SALES OFFICE ARE PERMITTED TEMPORARY USES. TEMPORARY USES ARE SUBJECT TO THE REQUIREMENTS OF THE EL PASO COUNTY LAND DEVELOPMENT CODE SECTION 5.3.1, AS AMENDED.

5. RESIDENTIAL HOME OCCUPATIONS ARE PERMITTED PURSUANT TO APPLICANT COMPLIANCE WITH THE EL PASO COUNTY LAND DEVELOPMENT CODE, AS AMENDED. COMPLIANCE WITH VISITOR/GUEST PARKING REQUIREMENTS NECESSARY TO OBTAIN A HOME OCCUPATION PERMIT SHALL BE THE SOLE RESPONSIBILITY OF THE HOME OWNER/APPLICANT. HOME OCCUPATIONS MAY BE LIMITED OR OTHERWISE RESTRICTED BASED ON APPLICANT'S ABILITY TO MEET ALL REQUIRED STANDARDS AND COMPLIANCE WITH ANY APPLICABLE STATE OF COLORADO REQUIREMENTS.

6. OPEN AND UNENCLOSED COVERED PATIOS, DECKS, PLATFORMS, LANDINGS, OR RAMPS MAY EXTEND INTO REQUIRED FRONT, SIDE, OR REAR SETBACKS PROVIDED THE FINISHED FLOOR SURFACE OF THE PATIO, DECK, PLATFORM, LANDING, OR RAMP DOES NOT EXCEED 24 INCHES IN HEIGHT MEASURED FROM THE FINISHED FLOOR TO ANY ADJACENT POINT OF THE FINISHED GRADE.

7. AWNINGS, CHIMNEYS AND FLUES, SILLS, BELT COURSES, CORNICES, EAVES, AND OTHER SIMILAR ARCHITECTURAL FEATURES MAY PROJECT NOT MORE THAN 2 FEET INTO REQUIRED FRONT, SIDE, OR REAR SETBACKS.

8. EACH HOME IS TO BE PROVIDED WITH PHOTOCELL ONLY CONTROLLED WALL SCONCE LIGHTING AT EACH GARAGE FACE AND AT THE ENTRY DOOR OF THE REAR LOADED UNITS.

9. EACH LOT OWNER SHALL OBTAIN REFUSE AND GARBAGE COLLECTION SERVICES THROUGH THE LOCAL UTILITY SERVICE PROVIDER. TRASH RECEPTACLES SHALL BE PLACED EITHER ON DRIVEWAYS OR WIDENED SIDEWALK AREAS FOR COLLECTION.

10. PROPERTY LOCATED IN MAYBERRY PHASE 1 PUD TRACT "K", AS FUTURE MAYBERRY PHASE 2, FILING NO. 1, CONTAINS A MINIMUM RESIDENTIAL LOT SIZE OF 2,030 SQUARE FEET.

11. PAIRED HOME LOTS SHALL CONSIST OF INDIVIDUALLY OWNED FEE-SIMPLE LOTS WITH THE COMMON PROPERTY LINE LOCATED AT THE CENTERLINE OF THE COMMON BUILDING SEPARATION. EACH DWELLING SHALL BE STRUCTURALLY INDEPENDENT WITH INDEPENDENT WALL FRAMING AND SHALL COMPLY WITH THE APPLICABLE TOWNHOUSE SEPARATION REQUIREMENTS OF THE ADOPTED RESIDENTIAL BUILDING CODE.

12. A PROPOSED PRIVATE DRIVE FOR RESIDENTIAL UNITS LOCATED WITHIN TRACT "K" SHALL PROVIDE VEHICULAR CIRCULATION THROUGHOUT THE AREA AND SHALL BE PRIVATELY OWNED BY MAYBERRY METROPOLITAN DISTRICT #4 AND MAINTAINED BY MAYBERRY METROPOLITAN DISTRICT #1.

13. DEVELOPMENT REQUIREMENTS FOR SPECIFIC LOT OPTIONS. SEE SHEETS 12 & 13 OF THIS DOCUMENT FOR LOT TYPICALS.
   A. OPTION A, SINGLE-FAMILY ATTACHED UNITS WITH REAR GARAGE ACCESS (REAR LOADED LOTS):
      LOTS 2-45, 48-49, 51-56, 87-98
      1. MAXIMUM LOT COVERAGE: 75 %
      2. MAXIMUM BUILDING HEIGHT: 35 FEET.
      3. SETBACK MINIMUMS:
         A. FRONT SETBACK: FIVE (5) FEET.
         B. INTERNAL SIDE SETBACK: ZERO (0) FEET.
         C. EXTERNAL SIDE SETBACK: THREE (3) FEET.
         D. REAR SETBACK: THREE (3) FEET.
      4. NO ACCESSORY BUILDINGS ARE ALLOWED.

   B. OPTION B, SINGLE-FAMILY ATTACHED UNITS WITH FRONT GARAGE ACCESS (FRONT LOADED LOTS):
      LOTS 57-72, 75-86
      1. MAXIMUM LOT COVERAGE: 75%
      2. MAXIMUM BUILDING HEIGHT: 35 FEET.
      3. SETBACK MINIMUMS:
         A. FRONT SETBACK: THREE (3) FEET.
         B. INTERNAL SIDE SETBACK: ZERO (0) FEET.
         C. EXTERNAL SIDE SETBACK: THREE (3) FEET.
         D. REAR SETBACK: FIVE (5) FEET.
      4. NO ACCESSORY BUILDINGS ARE ALLOWED.

   C. OPTION C, SINGLE-FAMILY DETACHED UNITS WITH REAR GARAGE ACCESS (REAR LOADED LOTS):
      LOTS 1, 46-47, 50
      1. MAXIMUM LOT COVERAGE: 75%
      2. MAXIMUM BUILDING HEIGHT: 35 FEET.
      3. SETBACK MINIMUMS:
         A. FRONT SETBACK: FIVE (5) FEET.
         B. SIDE SETBACK: THREE (3) FEET.
         C. REAR SETBACK: THREE (3) FEET.
      4. NO ACCESSORY BUILDINGS ARE ALLOWED.

   D. OPTION D, SINGLE-FAMILY DETACHED UNITS WITH FRONT GARAGE ACCESS (FRONT LOADED LOTS):
      LOTS 73-74
      1. MAXIMUM LOT COVERAGE: 75%
      2. MAXIMUM BUILDING HEIGHT: 35 FEET.
      3. SETBACK MINIMUMS:
         A. FRONT SETBACK: THREE (3) FEET.
         B. SIDE SETBACK: THREE (3) FEET.
         C. REAR SETBACK: FIVE (5) FEET.
      4. NO ACCESSORY BUILDINGS ARE ALLOWED.

14. EXTERIOR WALLS OF NON-SPRINKLERED DWELLINGS LOCATED LESS THAN 5' TO AN INTERIOR LOT LINE SHALL BE CONSTRUCTED TO MEET A 1-HOUR FIRE-RESISTIVE RATING PER THE CRITERIA OF IRC TABLE R302.1(1) OF THE PPRBD 2023 REGIONAL BUILDING CODE, 2ND PRINTING.

LOT 99 STANDARDS AND GUIDELINES

1. PERMITTED USES WITHIN THE MAYBERRY PHASE 2 PUD LOT 99 INCLUDE: COMMUNITY CLUBHOUSE, SALES OFFICE, MEETING SPACES, OFFICES, FITNESS FACILITY, REFRESHMENT STATION, SWIMMING POOL, HOT TUB, SAUNA, AND RECREATIONAL AMENITIES. PERMITTED USES WITHIN LOT 99 SHALL BE COMPLIMENTARY TO THE RESIDENTIAL URBAN LIVING ENVIRONMENT ANY MAY INCLUDE SUPPORTIVE AMENITY USES.

2. ACCESSORY USES AND BUILDINGS:
   A. RECREATIONAL FACILITIES, ENTERTAINMENT STRUCTURE, AND RETAIL FACILITY ARE ALLOWED FOR LOT 99.
   B. DEVELOPMENT REQUIREMENTS FOR ACCESSORY BUILDINGS SHALL MATCH DEVELOPMENT STANDARDS FOR PRIMARY STRUCTURE.
   C. EACH STRUCTURE WILL BE DESIGNED AND DEVELOPED AT ITS RESPECTIVE SITE DEVELOPMENT PLAN PROCESS.

3. DEVELOPMENT REQUIREMENTS
   A. MAXIMUM LOT COVERAGE: 75%
   B. MAXIMUM BUILDING HEIGHT: 50 FEET.
   C. SETBACK MINIMUMS:
      1. FRONT SETBACK: TEN (10) FEET.
      2. SIDE SETBACK: FIVE (5) FEET.
      3. REAR SETBACK: TEN (10) FEET.

PARKS AND OPEN SPACE AMENITIES

1. THE MAYBERRY COMMUNITY SEEKS TO DEVELOP A COHESIVE, SUSTAINABLE, AND VIBRANT ENVIRONMENT THAT ALIGNS WITH BOTH COUNTY REGULATIONS AND COMMUNITY OBJECTIVES.
   A. PROMOTE ACCESSIBLE, WELL-DESIGNED, AND CONNECTED RECREATION SPACES AND TRAILS.
   B. ENCOURAGE A MIX OF ACTIVE AND PASSIVE RECREATIONAL AMENITIES.

2. EACH PARK SPACE WILL BE DESIGNED THROUGH THE COUNTY SITE DEVELOPMENT PLAN PROCESS AND THE OVERALL PRIMARY TRACTS WILL CONSIST OF:
   A. MAYBERRY PUD PHASE 2, TRACT G (EXISTING TRACT A, MAYBERRY, COLORADO SPRINGS, FILING NO. 1), A DESIGNATED WELCOMING AND GRAND COMMUNITY LANDSCAPE FEATURE.
   B. MAYBERRY PUD PHASE 2, TRACT H, WILL BE ANCHORED BY SPORT COURTS AND SMALL IMPERMANENT RETAIL SPACES.
   C. MAYBERRY PUD PHASE 2, TRACT I (EXISTING TRACT O, MAYBERRY, COLORADO SPRINGS, FILING NO. 1), WILL PROVIDE THE MAIN COMMUNITY GATHERING, EVENT, AND MULTI-USE SPACE.

3. ADDITIONAL PERMITTED USES WITHIN THE MAYBERRY PHASE 2 PUD PARK AND AMENITY TRACTS INCLUDE: RECREATIONAL SPORT COURTS, ENCLOSURES, AND SEATING AREAS, RECREATION FIELDS, SHADE STRUCTURES, FITNESS EQUIPMENT, PUBLIC PLAZAS AND GATHERING AREAS, EVENT SPACES, BOTH PERMANENT AND TEMPORARY CONCESSION AND RETAIL BUSINESSES CONSISTENT WITH PERIODIC EVENTS THAT WOULD INCLUDE FOOD TRUCKS, FOOD TRAILERS, AND BOOTHS COMMON AT FESTIVALS AND FARMERS MARKETS.

4. A RIGHT-OF-WAY LICENSING AND MAINTENANCE AGREEMENT WILL BE REQUIRED FOR MAYBERRY METROPOLITAN DISTRICT #1 FOR MAINTAINING ROADSIDE PARKING, LANDSCAPING, AND TREE WELLS WITHIN THE PUBLIC RIGHT-OF-WAY.

APPROVED MAYBERRY PHASE 1 PUD MODIFICATION TABLE

LDC/ECM SECTION	STANDARD	MODIFICATION	JUSTIFICATION
ECM 2.3.2	URBAN NON-RESIDENTIAL COLLECTOR DESIGN STANDARDS	MODIFIED CROSS-SECTION	COMPARABLE ROADWAY DESIGN IS PROPOSED AND TRAFFIC OPERATIONS WILL PROVIDE ACCEPTABLE LEVELS OF SERVICE
ECM 2.3.2	URBAN MINOR ARTERIAL DESIGN STANDARDS	MODIFIED CROSS-SECTION	COMPARABLE ROADWAY DESIGN IS PROPOSED AND TRAFFIC OPERATIONS WILL PROVIDE ACCEPTABLE LEVELS OF SERVICE
ECM I.7.3	FOREBAY REQUIRED IN STORMWATER DETENTION POND	A CONCRETE TRICKLE CHANNEL PROPOSED AS AN ALTERNATE TO A FOREBAY	THE TEMPORARY NATURE OF THE DETENTION BASIN AND COMPARABLE ALTERNATIVE DESIGN COMPONENTS ARE PROPOSED.
ECM 2.3.2	URBAN RESIDENTIAL COLLECTOR DESIGN STANDARDS	MODIFIED CROSS-SECTION	COMPARABLE ROADWAY DESIGN IS PROPOSED AND TRAFFIC OPERATIONS WILL PROVIDE ACCEPTABLE LEVELS OF SERVICE

PROPOSED PUD MODIFICATION TABLE

LDC/ECM SECTION	STANDARD	MODIFICATION	JUSTIFICATION
ECM 2.3.2	URBAN RESIDENTIAL COLLECTOR DESIGN STANDARDS	MODIFIED CROSS-SECTION	A COMPARABLE OR SUPERIOR ROADWAY DESIGN IS PROPOSED TO SUPPORT THE PEDESTRIAN-FRIENDLY NATURE OF THE DEVELOPMENT
ECM 2.3.2	URBAN MINOR ARTERIAL DESIGN STANDARDS	MODIFIED CROSS-SECTION	A COMPARABLE OR SUPERIOR ROADWAY DESIGN IS PROPOSED TO SUPPORT THE PEDESTRIAN-FRIENDLY NATURE OF THE DEVELOPMENT
LDC 4.2.6.F.8.f	10 FOOT MINIMUM SETBACK OF PRIVATELY OWNED BUILDINGS TO TRAILS AND OPEN SPACE WITHIN A PUD	MODIFIED MINIMUM SETBACK TO 3 FEET	HIGHER-DENSITY ZONING AREAS MAY UTILIZE REDUCED SETBACKS TO ALLOW FOR MORE EFFICIENT LOT UTILIZATION WHILE MAINTAINING THE FUNCTION AND INTENT OF PUBLIC TRAILS AND OPEN SPACES. LAND OTHERWISE OCCUPIED BY PRIVATE SETBACKS ARE REALLOCATED TO PUBLIC TRAILS CORRIDORS AND EXPANDED OPEN SPACES.
LDC 6.2.5	MINIMUM PARKING REQUIREMENTS	MODIFIED MINIMUM DRIVE WIDTH WITH 90 DEGREE PARKING	RATHER THAN THE 24 FOOT WIDTH REQUIRED WITHIN EL PASO COUNTY STANDARDS, PER EFPD ACCEPTING INTERNATIONAL FIRE CODE 503.2.1 A MINIMUM WIDTH OF 20 FEET IS ACCEPTABLE, WHICH IS CURRENTLY BEING PROVIDED.
LDC 6.3.3.C.3.e.	WIDTH OF DRIVEWAY AND EMERGENCY VEHICLE LANES	MODIFIED MINIMUM WIDTH	RATHER THAN THE 24 FOOT WIDTH REQUIRED WITHIN EL PASO COUNTY STANDARDS, PER EFPD ACCEPTING INTERNATIONAL FIRE CODE 503.2.1 A MINIMUM WIDTH OF 20 FEET IS ACCEPTABLE, WHICH IS CURRENTLY BEING PROVIDED.
LDC 8.4.3.B.2.e & 8.4.4(E)	LOTS REQUIRED TO HAVE 30' FRONTAGE AND ACCESS FROM A PUBLIC ROAD	LOTS WILL BE ACCESS PRIMARILY FROM PRIVATE SHARED ROADS	PRIVATE ROADS ENCOURAGE A WALKABLE COMMUNITY AND ASSIST IN CREATING RESIDENTIAL UNIT OPPORTUNITIES
LDC 8.4.5.G.4.b.i	URBAN DENSITY DRNG ESMT WIDTH: SIDE LOT LINES: 5 FEET REAR LOT LINES: 7 FEET	REAR AND SIDE LOT LINES TO BE 3' TO CONVEY DRAINAGE TO EITHER THE ALLEYS OR THE OPEN SPACE TRACTS	HIGHER-DENSITY ZONING AREAS MAY UTILIZE REDUCED SETBACKS AND NARROWER SIDE-LOT UTILITY EASEMENTS TO ACCOMMODATE BUILDING FOOTPRINT OPTIONS. UTILITY COMPANIES HAVE INDICATED ACCEPTANCE OF THE REDUCED EASEMENTS. ADEQUATE STORMWATER CONVEYANCE IS SUPPORTED BY THE PDR CALCULATIONS AND TYPICAL SECTIONS SHEET.
LDC 8.4.6.C.2.c	WHERE ESMTS ARE COMBINED WITH A WATER COURSE OR DRAINAGE WAY, AN ADDITIONAL UTIL. ESMT SHALL BE PROVIDED IF THE USE IS IN CONFLICT WITH DRNG REQUIREMENTS	THE WIDTH OF COMBINED-USE DRAINAGE AND UTILITY EASEMENTS WITHIN RESIDENTIAL LOTS AND TRACTS TO BE PER PLAN, MINIMUM OF 3 FEET PER LOT	HIGHER-DENSITY ZONING AREAS MAY UTILIZE REDUCED SETBACKS AND NARROWER SIDE-LOT UTILITY EASEMENTS TO ACCOMMODATE BUILDING FOOTPRINT OPTIONS. UTILITY COMPANIES HAVE INDICATED ACCEPTANCE OF THE REDUCED EASEMENTS. ADEQUATE STORMWATER CONVEYANCE IS SUPPORTED BY THE PDR CALCULATIONS AND TYPICAL SECTIONS SHEET.
LDC 6.2.2.B.1	TABLE 6-1 LISTS 10' DEPTH OF LANDSCAPE AREA REQUIRED ALONG NON ARTERIAL ROADWAYS	8' LANDSCAPE SETBACK AREA BETWEEN MARKET PLACE DRIVE R.O.W. AND THE SINGLE FAMILY ATTACHED DWELLINGS	ALL LANDSCAPING HAS BEEN PROPOSED WITHIN THE R.O.W ALONG THE ENTIRETY OF MARKET PLACE DRIVE IN EFFORTS TO MEET OR EXCEED THE REQUIRED LANDSCAPE AREA

LJA
1765 W. 121st Avenue
Suite 300
Westminster, CO 80234
303-421-4224 • www.lja.com

No	Revision Type	Rev. Date
1		
2		
3		
4		
5		
6		

Job No.: 8787-0001 | Sheet: 2 of 16
Scale Horiz: N/A | Date: September 18, 2026
Scale Vert: N/A
Designed: WCK
Prepared: WCK
Approved: AKM

Proj. Name: Mayberry Phase 2
Location: El Paso County
Plan Set: PUD Development Plan & Preliminary Plan
Sheet Name: DESIGN STANDARDS

Client: Mayberry Communities, LLC
Address: 22108 Cattlemen Run, Calhan, CO 80808
Contact: Scott Souders

Know what's below. Call before you dig.

No. 2

S:\LAND\SW\WEST-CO\8787 - MAYBERRY\8787-0001\PLA\01 ENTITLEMENTS\PUD\BOCC\2026.11.04-MAYBERRY-PUD 2-COVER PRINTED ON: 11/10/2026 9:12 AM

MAYBERRY PHASE 2

PUD DEVELOPMENT PLAN AND PRELIMINARY PLAN
LOCATED IN THE NW 1/4 OF SECTION 14 & THE NE 1/4 OF SECTION 15, TOWNSHIP 14 SOUTH,
RANGE 63 WEST OF THE 6TH P.M.,
EL PASO COUNTY, STATE OF COLORADO.

226105515
11/13/2026

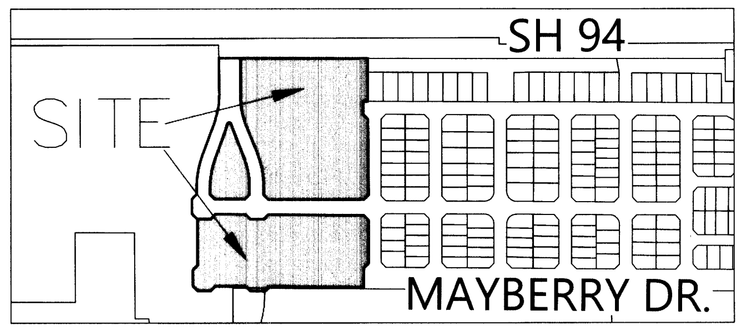



MONUMENT SYMBOL LEGEND

RECOVERED SECTION CORNER AS NOTED HEREON

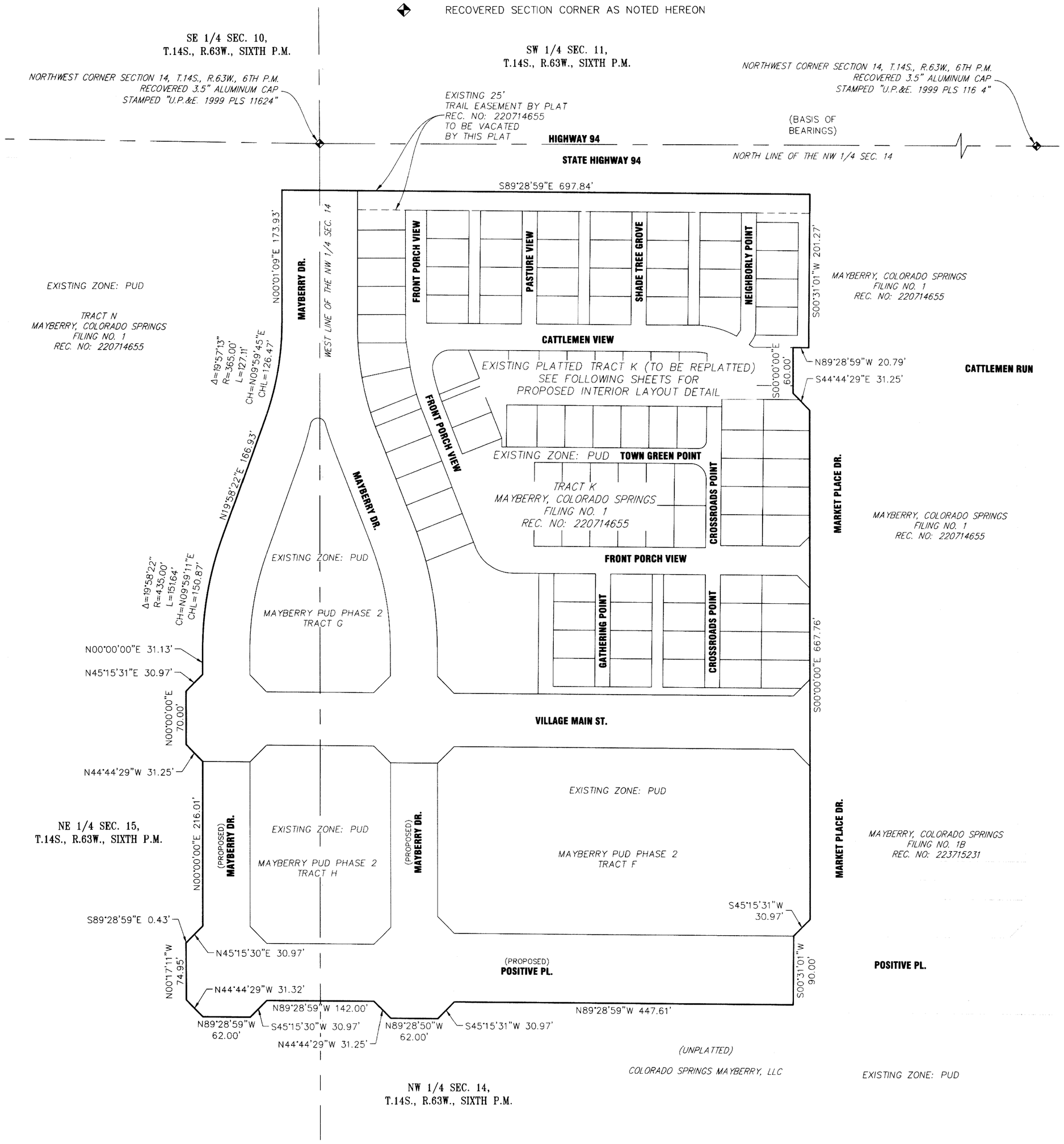

LEGAL DESCRIPTION

ALL OF TRACTS A, K AND O, MAYBERRY, COLORADO SPRINGS FILING NO. 1, A SUBDIVISION OF LAND IN THE NORTHWEST QUARTER OF SECTION 14 AND THE NORTHEAST QUARTER OF SECTION 15, TOWNSHIP 14 SOUTH, RANGE 63 WEST OF THE 6TH PRINCIPAL MERIDIAN, EL PASO COUNTY, COLORADO, THE PLAT OF SAID SUBDIVISION RECORDED DECEMBER 23, 2020, AS RECEPTION NUMBER 220714655 IN THE OFFICE OF THE CLERK AND RECORDER OF EL PASO COUNTY, COLORADO:

AND

UNPLATTED LAND IN SAID NORTHWEST AND NORTHEAST QUARTERS, LYING BETWEEN AND ADJOINING THE WEST LINE OF SAID TRACT O AND THE EASTERLY LINE OF TRACT N, SAID MAYBERRY, COLORADO SPRINGS FILING NO. 1, ALSO LYING NORTH OF THAT EASTERLY/WESTERLY SEGMENT OF THE EASTERLY LINE OF SAID TRACT N THAT INTERSECTS THE EAST LINE OF SAID NORTHEAST 1/4 OF SAID SECTION 15 AND EXTENDED EASTERLY TO THE SOUTHEAST CORNER OF THE RIGHT-OF-WAY OF POSITIVE PLACE (FORMERLY KNOWN AS MAYBERRY DRIVE) ESTABLISHED BY SAID PLAT;

AND

THE RIGHT-OF-WAYS OF MAYBERRY DRIVE (FORMERLY KNOWN AS NEW LOG ROAD) AND VILLAGE MAIN STREET LYING IN SAID NORTHWEST AND NORTHEAST QUARTERS, ESTABLISHED BY SAID PLAT AND ADJOINING THE EASTERLY, WESTERLY AND SOUTHERLY LINES OF SAID TRACT A AND ADJOINING THE WESTERLY AND SOUTH LINES OF SAID TRACT K; ALL TOGETHER MORE PARTICULARLY DESCRIBED AS FOLLOWS:

BASIS OF BEARINGS: THE NORTH LINE OF THE NORTHWEST QUARTER OF SECTION 14, TOWNSHIP 14 SOUTH, RANGE 63 WEST OF THE SIXTH PRINCIPAL MERIDIAN BEING MONUMENTED AT THE NORTHWEST CORNER BY A 3-1/2" ALUMINUM CAP STAMPED "PLS 1164" AND AT THE NORTH QUARTER CORNER BY A 2" ALUMINUM CAP STAMPED "PLS 11624" ASSUMED TO BEAR SOUTH 89° 44' 49" EAST;

BEGINNING AT THE NORTHEAST CORNER OF SAID TRACT K, THENCE SOUTHERLY ON THE EASTERLY LINE OF SAID TRACT K THE FOLLOWING 4 COURSES AND DISTANCES:

1. SOUTH 00° 31' 01" WEST A DISTANCE OF 201.27 FEET;
2. NORTH 89° 28' 59" WEST A DISTANCE OF 20.79 FEET;
3. SOUTH 00° 00' 00" EAST A DISTANCE OF 60.00 FEET;
4. SOUTH 44° 44' 29" EAST A DISTANCE OF 31.25 FEET;

THENCE ON THE EAST LINE OF SAID TRACT K AND ITS SOUTHERLY EXTENSION AND ON THE EAST LINE OF SAID TRACT O, SOUTH 00° 00' 00" EAST A DISTANCE OF 667.76 FEET TO THE MOST NORTHERLY SOUTHEAST CORNER OF SAID TRACT O;

THENCE SOUTH 45° 15' 31" WEST A DISTANCE OF 30.97 FEET ON THE SOUTHEAST LINE OF SAID TRACT O TO THE MOST SOUTHERLY SOUTHEAST CORNER OF SAID TRACT O;

THENCE ON THE WEST LINE OF SAID POSITIVE PLACE RIGHT-OF-WAY SOUTH 00° 31' 01" WEST A DISTANCE OF 90.00 FEET;

THENCE DEPARTING THE WEST RIGHT-OF-WAY LINE THE FOLLOWING EIGHT (8) COURSES:

1. NORTH 89° 28' 59" WEST A DISTANCE OF 447.61 FEET;
2. SOUTH 45° 15' 31" WEST A DISTANCE OF 30.97 FEET;
3. NORTH 89° 28' 50" WEST A DISTANCE OF 62.00 FEET;
4. NORTH 44° 44' 29" WEST A DISTANCE OF 31.25 FEET;
5. NORTH 89° 28' 59" WEST A DISTANCE OF 142.00 FEET;
6. SOUTH 45° 15' 30" WEST A DISTANCE OF 30.97 FEET;
7. NORTH 89° 28' 59" WEST A DISTANCE OF 62.00 FEET;
8. NORTH 44° 44' 29" WEST A DISTANCE OF 31.32 FEET, TO A POINT ON THE EASTERLY LINE OF TRACT N, SAID MAYBERRY;

THENCE ON THE EASTERLY LINE OF SAID TRACT N, NORTH 00° 17' 11" WEST A DISTANCE OF 74.95 FEET;

THENCE SOUTH 89° 28' 59" EAST A DISTANCE OF 0.43 FEET;

THENCE NORTH 45° 15' 30" EAST A DISTANCE OF 30.97 FEET, TO A POINT ON THE SOUTHERLY EXTENSION OF THE EASTERLY LINE OF SAID TRACT N;

THENCE ON THE EASTERLY LINES OF SAID TRACT N, THE FOLLOWING NINE (9) COURSES:

1. NORTH 00° 00' 00" EAST A DISTANCE OF 216.01 FEET;
2. NORTH 44° 44' 29" WEST A DISTANCE OF 31.25 FEET;
3. NORTH 00° 00' 00" EAST A DISTANCE OF 70.00 FEET;
4. NORTH 45° 15' 31" EAST A DISTANCE OF 30.97 FEET;
5. NORTH 00° 00' 00" EAST A DISTANCE OF 31.13 FEET TO A POINT OF TANGENT CURVE;
6. NORTHERLY, ALONG A CURVE, CONCAVE TO THE SOUTHEAST, HAVING A CENTRAL ANGLE OF 19° 58' 22", A RADIUS OF 435.00 FEET, AN ARC DISTANCE OF 151.64 FEET; A CHORD BEARING NORTH 09° 59' 11" EAST, AND A CHORD DISTANCE OF150.87 FEET TO A POINT OF TANGENCY;
7. NORTH 19° 58' 22" EAST, 166.93 FEET TOA POINT OF TANGENT CURVE;
8. NORTHERLY, ALONG A CURVE, CONCAVE TO THE NORTHEAST, HAVING A CENTRAL ANGLE OF 19° 57' 13", A RADIUS OF 365.00 FEET, AN ARC LENGTH OF 127.11 FEET, A CHORD BEARING OF 09° 59' 45" EAST, AND A CHORD DISTANCE OF 126.47 FEET TO A POINT OF TANGENCY;
9. THENCE NORTH 00° 01' 09" EAST A DISTANCE OF 173.93 FEET, TO A POINT ON THE SOUTHERLY RIGHT-OF-WAY OF HIGHWAY 94;

THENCE ON SAID SOUTHERLY RIGHT-OF-WAY LINE, SOUTH 89° 28' 59" EAST A DISTANCE OF 697.84 FEET, TO THE POINT OF BEGINNING;

CONTAINING A CALCULATED AREA OF 816,336 SQUARE FEET OR 18.741 ACRES, MORE OR LESS.

LEGEND

(#) = BLOCK NUMBER
W.S.D.E. = WATER, SANITARY & DRAINAGE EASEMENT
SD.E. = SIGHT DISTANCE EASEMENT
U.D.A.E. = UTILITY, DRAINAGE & ACCESS EASEMENT
U.E. = UTILITY EASEMENT
W.S.E. = WATER & SANITARY EASEMENT
S.E. = SANITARY EASEMENT
REC. NO. = RECEPTION NUMBER
R.O.W. = RIGHT OF WAY



LJA
1765 W. 121St. Avenue
Suite 300
Westminster, CO 80234
303-421-4224 • WWW.LJA.COM

No.	Rev. Date:	Revision Type:
1		
2		
3		
4		
5		
6		

Designed: WCK
Prepared: JAP
Approved: AKM
Job No.: 8787-0001
Scale Horiz: 1" = 80'
Scale Vert: N/A
Sheet: 3 of 16
Date: September 18, 2026

Proj. Name: Mayberry Phase 2
Location: El Paso County
Plan Set: PUD Development Plan & Preliminary Plan
Sheet Name: PUD Boundary

Client: Mayberry Communities, LLC
Address: 22108 Cattlemen Run Calhan, CO 80808
Contact: Scott Souders

811 Know what's below. Call before you dig.

No. 3

S:\LAND\SW\WEST-CO\8787 - MAYBERRY\8787-0001\SURVEY\06 CAD\PRODUCTION FILES\8787-0001_MAYBERRY PUD - OVERALL PRINTED ON: 9/21/2026 11:33 AM

MAYBERRY PHASE 2

PUD DEVELOPMENT PLAN AND PRELIMINARY PLAN
LOCATED IN THE NW 1/4 OF SECTION 14 & THE NE 1/4 OF SECTION 15, TOWNSHIP 14 SOUTH,
RANGE 63 WEST OF THE 6TH P.M.,
EL PASO COUNTY, STATE OF COLORADO.

226105515
11/13/2026

SCALE
1 inch = 30 ft.

SE 1/4 SEC. 10, T.14S., R.63W., SIXTH P.M.

NORTHWEST CORNER SECTION 14, T.14S., R.63W., 6TH P.M. RECOVERED 3.5" ALUMINUM CAP STAMPED "U.P.&E. 1999 PLS 11624"

SW 1/4 SEC. 11, T.14S., R.63W., SIXTH P.M.

(BASIS OF BEARINGS) S89°44'49"E 2606.52' NORTH LINE OF THE NW 1/4 SEC. 14

NORTHWEST CORNER SECTION 14, T.14S., R.63W., 6TH P.M. RECOVERED 3.5" ALUMINUM CAP STAMPED "U.P.&E. 1999 PLS 116 4"

STATE HIGHWAY 94
(PUBLIC R.O.W. VARIES)

EXISTING 25' TRAIL EASEMENT BY PLAT, REC. NO: 220714655 TO BE VACATED BY THIS PLAT

TRACT N
MAYBERRY, COLORADO SPRINGS FILING NO. 1
REC. NO: 220714655

EXISTING ZONE: PUD

MAYBERRY DR.
(100' PUBLIC R.O.W.)
REC. NO: 220714655

WEST LINE OF THE NW 1/4 SEC. 14

NE 1/4 SEC. 15, T.14S., R.63W., SIXTH P.M.

S89°28'59"E 697.84'

100.00'

TRACT B
27,545 SF
0.632 AC

FRONT PORCH VIEW

PASTURE VIEW

SHADE TREE GROVE

NEIGHBORLY POINT

TRACT A
81,591 SF
1.873 AC

TRACT K
MAYBERRY, COLORADO SPRINGS FILING NO. 1
REC. NO: 220714655

MAYBERRY, COLORADO SPRINGS FILING NO. 1
REC. NO: 220714655

NW 1/4 SEC. 14, T.14S., R.63W., SIXTH P.M.

CATTLEMEN VIEW

CATTLEMEN RUN
(60' PUBLIC R.O.W.)
REC. NO: 220714655

TRACT C
10,728 SF
0.246 AC

TRACT E
1,273 SF
0.029 AC

TRACT G
45,097 SF
1.035 AC

EXISTING ZONE: PUD
MAYBERRY PUD
PHASE 2
TRACT G

TOWN GREEN POINT

CROSSROADS POINT

MARKET PLACE DR.
(60' PUBLIC R.O.W.)
REC. NO: 220714655

MAYBERRY, COLORADO SPRINGS FILING NO. 1
REC. NO: 220714655

MATCH TO SHEET 3

LEGEND

(#) = BLOCK NUMBER
W.S.D.E. = WATER, SANITARY & DRAINAGE EASEMENT
SD.E. = SIGHT DISTANCE EASEMENT
U.D.A.E. = UTILITY, DRAINAGE & ACCESS EASEMENT
U.E. = UTILITY EASEMENT
W.S.E. = WATER & SANITARY EASEMENT
S.E. = SANITARY EASEMENT
REC. NO.= RECEPTION NUMBER
R.O.W. = RIGHT OF WAY

TRACT TABLE

TRACT	AREA (SQ.FT.)	AREA (AC.±)	USE	OWNED / MAINTAINED
TRACT A	81,591	1.873	ACCESS, DRAINAGE, LANDSCAPE, OPEN SPACE, PRIVATE ROAD, SIDEWALKS, UTILITIES	MAYBERRY METRO DISTRICT 4 / MAYBERRY METRO DISTRICT 1
TRACT B	27,545	0.632	ACCESS, DRAINAGE, LANDSCAPE, OPEN SPACE, PARK, SIDEWALKS, UTILITIES	MAYBERRY METRO DISTRICT 4 / MAYBERRY METRO DISTRICT 1
TRACT C	10,728	0.246	ACCESS, DRAINAGE, LANDSCAPE, OPEN SPACE, PARK, SIDEWALKS, UTILITIES	MAYBERRY METRO DISTRICT 4 / MAYBERRY METRO DISTRICT 1
TRACT D	8,605	0.198	ACCESS, DRAINAGE, LANDSCAPE, OPEN SPACE, PARK, SIDEWALKS, UTILITIES	MAYBERRY METRO DISTRICT 4 / MAYBERRY METRO DISTRICT 1
TRACT E	1,273	0.029	ACCESS, DRAINAGE, LANDSCAPE, OPEN SPACE, PARK, SIDEWALKS, UTILITIES	MAYBERRY METRO DISTRICT 4 / MAYBERRY METRO DISTRICT 1
TRACT F	119,676	2.747	ACCESS, DRAINAGE, LANDSCAPE, OPEN SPACE, PARK, RECREATION, SIDEWALKS, SPORTS FACILITIES, UTILITIES	MAYBERRY METRO DISTRICT 3 / MAYBERRY METRO DISTRICT 1
TRACT G	45,097	1.035	ACCESS, DRAINAGE, LANDSCAPE, OPEN SPACE, PARK, RECREATION, SIDEWALKS, UTILITIES	MAYBERRY METRO DISTRICT 4 / MAYBERRY METRO DISTRICT 1
TRACT H	47,392	1.088	DRAINAGE, LANDSCAPE, OPEN SPACE, PARK, RECREATION, SIDEWALKS, SPORTS FACILITIES, UTILITIES	MAYBERRY METRO DISTRICT 4 / MAYBERRY METRO DISTRICT 1

PROFESSIONAL LAND SURVEYOR 38219 11-10-2026

Know what's below. Call before you dig.

LJA
1765 W. 121st Avenue
Suite 300
Westminster, CO 80234
303-421-4224 • www.lja.com

No.	Rev. Date:	Revision Type:
1		
2		
3		
4		
5		
6		

Designed: WCK
Prepared: JAP
Approved: AKM
Job No.: 8787-0001
Scale Horiz: 1" = 30'
Scale Vert: N/A
Sheet: 4 of 16
Date: September 18, 2026

Proj. Name: Mayberry Phase 2
Location: El Paso County
Plan Set: PUD Development Plan & Preliminary Plan
Sheet Name: Tract K Boundary Detail (1)

Client: Mayberry Communities, LLC
Address: 22108 Cattlemen Run Calhan, CO 80808
Contact: Scott Souders

No. 4

S:\LAND\SW WEST-CO\8787 - MAYBERRY\8787-0001\SURVEY\06 CAD\PRODUCTION FILES\8787-0001_MAYBERRY PUD PRINTED ON: 9/21/2026 11:33 AM

MAYBERRY PHASE 2

PUD DEVELOPMENT PLAN AND PRELIMINARY PLAN
LOCATED IN THE NW 1/4 OF SECTION 14 & THE NE 1/4 OF SECTION 15, TOWNSHIP 14 SOUTH,
RANGE 63 WEST OF THE 6TH P.M.,
EL PASO COUNTY, STATE OF COLORADO.

226105515
11/13/2026

LEGEND

(#) = BLOCK NUMBER
W.S.D.E.= WATER, SANITARY & DRAINAGE EASEMENT
SD.E.= SIGHT DISTANCE EASEMENT
U.D.A.E.= UTILITY, DRAINAGE & ACCESS EASEMENT
U.E.= UTILITY EASEMENT
W.S.E.= WATER & SANITARY EASEMENT
S.E.= SANITARY EASEMENT
REC. NO.= RECEPTION NUMBER
R.O.W.= RIGHT OF WAY

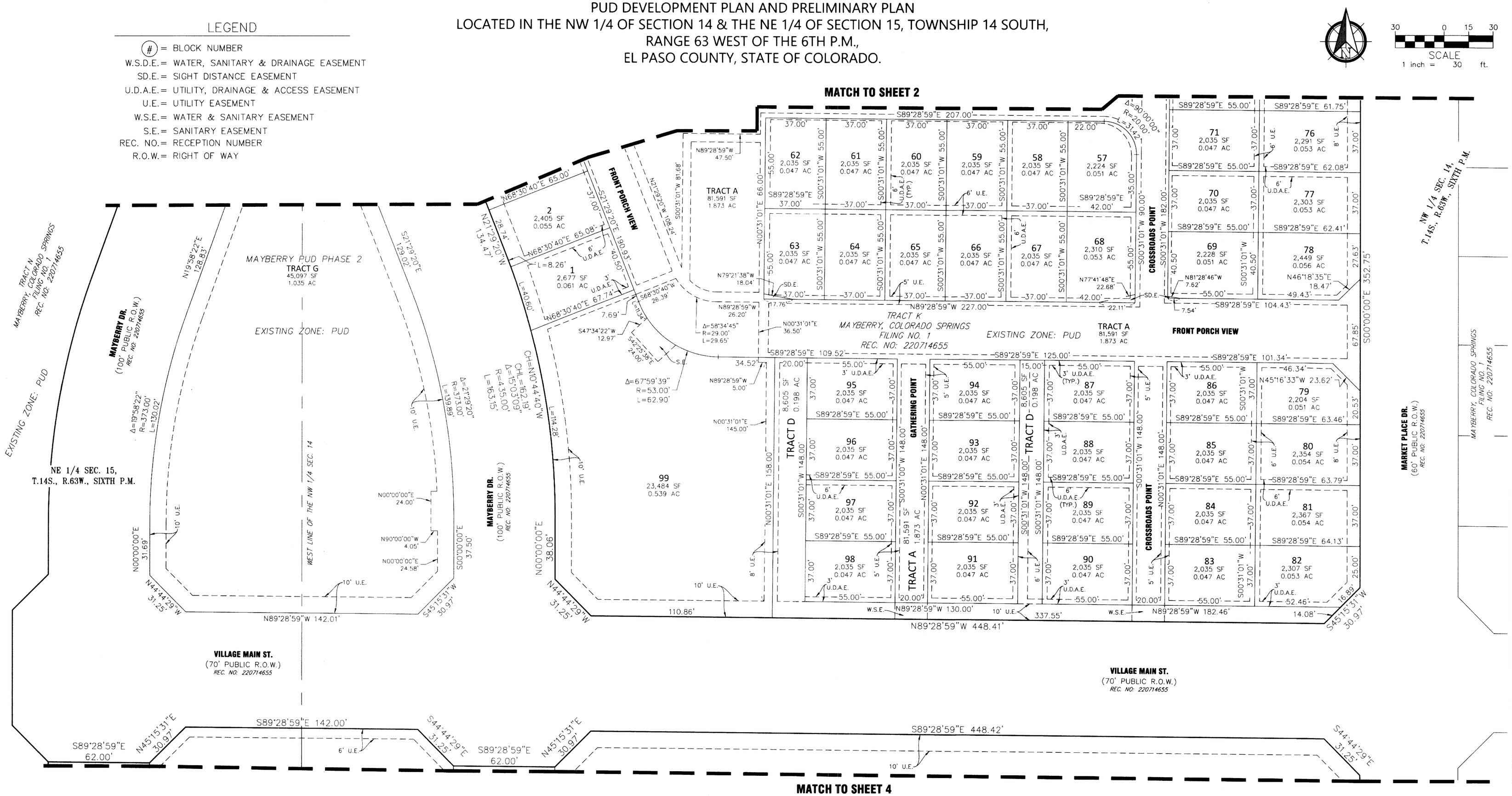

TRACT TABLE				
TRACT	AREA (SQ.FT.)	AREA (AC.±)	USE	OWNED / MAINTAINED
TRACT A	81,591	1.873	ACCESS, DRAINAGE, LANDSCAPE, OPEN SPACE, PRIVATE ROAD, SIDEWALKS, UTILITIES	MAYBERRY METRO DISTRICT 4 / MAYBERRY METRO DISTRICT 1
TRACT B	27,545	0.632	ACCESS, DRAINAGE, LANDSCAPE, OPEN SPACE, PARK, SIDEWALKS, UTILITIES	MAYBERRY METRO DISTRICT 4 / MAYBERRY METRO DISTRICT 1
TRACT C	10,728	0.246	ACCESS, DRAINAGE, LANDSCAPE, OPEN SPACE, PARK, SIDEWALKS, UTILITIES	MAYBERRY METRO DISTRICT 4 / MAYBERRY METRO DISTRICT 1
TRACT D	8,605	0.198	ACCESS, DRAINAGE, LANDSCAPE, OPEN SPACE, PARK, SIDEWALKS, UTILITIES	MAYBERRY METRO DISTRICT 4 / MAYBERRY METRO DISTRICT 1
TRACT E	1,273	0.029	ACCESS, DRAINAGE, LANDSCAPE, OPEN SPACE, PARK, SIDEWALKS, UTILITIES	MAYBERRY METRO DISTRICT 4 / MAYBERRY METRO DISTRICT 1
TRACT F	119,676	2.747	ACCESS, DRAINAGE, LANDSCAPE, OPEN SPACE, PARK, RECREATION, SIDEWALKS, SPORTS FACILITIES, UTILITIES	MAYBERRY METRO DISTRICT 3 / MAYBERRY METRO DISTRICT 1
TRACT G	45,097	1.035	ACCESS, DRAINAGE, LANDSCAPE, OPEN SPACE, PARK, RECREATION, SIDEWALKS, UTILITIES	MAYBERRY METRO DISTRICT 4 / MAYBERRY METRO DISTRICT 1
TRACT H	47,392	1.088	DRAINAGE, LANDSCAPE, OPEN SPACE, PARK, RECREATION, SIDEWALKS, SPORTS FACILITIES, UTILITIES	MAYBERRY METRO DISTRICT 4 / MAYBERRY METRO DISTRICT 1

LJA
1765 W. 121st Avenue
Suite 300
Westminster, CO 80234
303-421-4224 • www.lja.com

No.	Rev. Date:	Revision Type:
1		
2		
3		
4		
5		
6		

Designed: WCK | Job No.: 8787-0001 | Sheet: 5 of 16
Prepared: JAP | Scale Horiz: 1" = 30' | Date: September 18, 2026
Approved: AKM | Scale Vert: N/A

Proj. Name: Mayberry Phase 2
Location: El Paso County
Plan Set: PUD Development Plan & Preliminary Plan
Sheet Name: Tract K Boundary Detail (2)

Client: Mayberry Communities, LLC
Address: 22108 Cattlemen Run, Calhan, CO 80808
Contact: Scott Souders

Know what's below.
Call before you dig.

No. 5

S:_LAND\SW\WEST-CO\8787 - MAYBERRY\8787-0001\SURVEY\06 CAD\PRODUCTION FILES\8787-0001_MAYBERRY PUD PRINTED ON: 9/21/2026 11:33 AM

MAYBERRY PHASE 2

PUD DEVELOPMENT PLAN AND PRELIMINARY PLAN
LOCATED IN THE NW 1/4 OF SECTION 14 & THE NE 1/4 OF SECTION 15, TOWNSHIP 14 SOUTH,
RANGE 63 WEST OF THE 6TH P.M.,
EL PASO COUNTY, STATE OF COLORADO.

226105515
11/13/2026

LEGEND

(#) = BLOCK NUMBER
W.S.D.E. = WATER, SANITARY & DRAINAGE EASEMENT
SD.E. = SIGHT DISTANCE EASEMENT
U.D.A.E. = UTILITY, DRAINAGE & ACCESS EASEMENT
U.E. = UTILITY EASEMENT
W.S.E. = WATER & SANITARY EASEMENT
S.E. = SANITARY EASEMENT
REC. NO. = RECEPTION NUMBER
R.O.W. = RIGHT OF WAY

SCALE
1 inch = 30 ft.

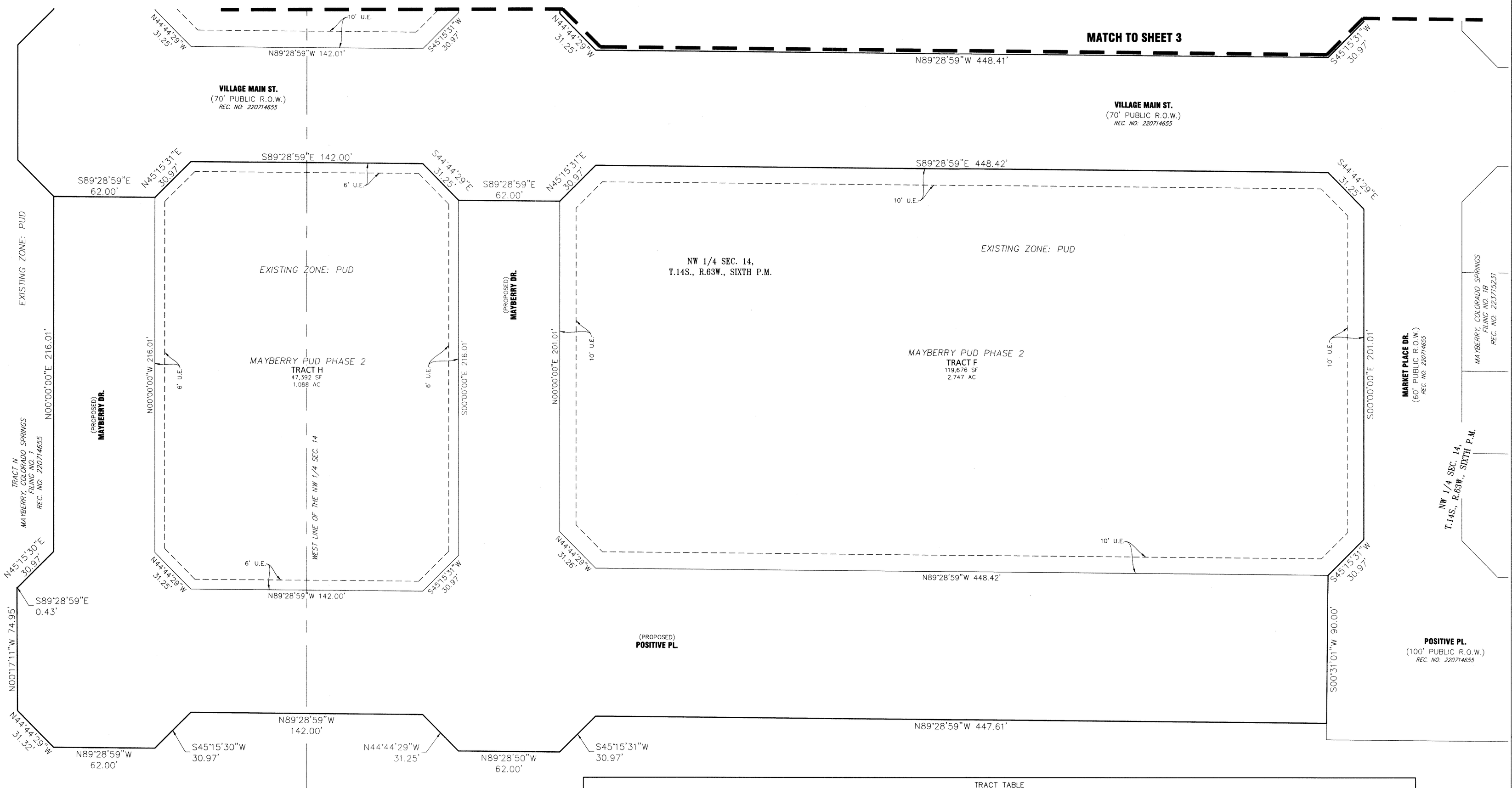

TRACT TABLE

TRACT	AREA (SQ.FT.)	AREA (AC.±)	USE	OWNED / MAINTAINED
TRACT A	81,591	1.873	ACCESS, DRAINAGE, LANDSCAPE, OPEN SPACE, PRIVATE ROAD, SIDEWALKS, UTILITIES	MAYBERRY METRO DISTRICT 4 / MAYBERRY METRO DISTRICT 1
TRACT B	27,545	0.632	ACCESS, DRAINAGE, LANDSCAPE, OPEN SPACE, PARK, SIDEWALKS, UTILITIES	MAYBERRY METRO DISTRICT 4 / MAYBERRY METRO DISTRICT 1
TRACT C	10,728	0.246	ACCESS, DRAINAGE, LANDSCAPE, OPEN SPACE, PARK, SIDEWALKS, UTILITIES	MAYBERRY METRO DISTRICT 4 / MAYBERRY METRO DISTRICT 1
TRACT D	8,605	0.198	ACCESS, DRAINAGE, LANDSCAPE, OPEN SPACE, PARK, SIDEWALKS, UTILITIES	MAYBERRY METRO DISTRICT 4 / MAYBERRY METRO DISTRICT 1
TRACT E	1,273	0.029	ACCESS, DRAINAGE, LANDSCAPE, OPEN SPACE, PARK, SIDEWALKS, UTILITIES	MAYBERRY METRO DISTRICT 4 / MAYBERRY METRO DISTRICT 1
TRACT F	119,676	2.747	ACCESS, DRAINAGE, LANDSCAPE, OPEN SPACE, PARK, RECREATION, SIDEWALKS, SPORTS FACILITIES, UTILITIES	MAYBERRY METRO DISTRICT 3 / MAYBERRY METRO DISTRICT 1
TRACT G	45,097	1.035	ACCESS, DRAINAGE, LANDSCAPE, OPEN SPACE, PARK, RECREATION, SIDEWALKS, UTILITIES	MAYBERRY METRO DISTRICT 4 / MAYBERRY METRO DISTRICT 1
TRACT H	47,392	1.088	DRAINAGE, LANDSCAPE, OPEN SPACE, PARK, RECREATION, SIDEWALKS, SPORTS FACILITIES, UTILITIES	MAYBERRY METRO DISTRICT 4 / MAYBERRY METRO DISTRICT 1

38219
11-10-2026
REVISED
PROFESSIONAL LAND SURVEYOR

Know what's below.
Call before you dig.

LJA
1765 W. 121st Avenue
Suite 300
Westminster, CO 80234
303-421-4224 • www.lja.com

No.	Rev. Date:
1	
2	
3	
4	
5	
6	

Revision Type:

Designed: WCK
Prepared: JAP
Approved: AKM

Job No. 8787-0001
Scale Horiz. 1" = 30'
Scale Vert. N/A

Sheet: 6 of 16
Date: September 18, 2026

Proj. Name: Mayberry Phase 2
Location: El Paso County
Plan Set: PUD Development Plan & Preliminary Plan
Sheet Name: Parks Boundary Detail

Client: Mayberry Communities, LLC
Address: 22108 Cattlemen Run
Calhan, CO 80808
Contact: Scott Souders

No. 6

S:\LAND\SW\WEST-CO\8787 - MAYBERRY\8787-0001\SURVEY\06 CAD\PRODUCTION FILES\8787-0001_MAYBERRY PUD PRINTED ON: 9/21/2026 11:33 AM

MAYBERRY PHASE 2

PUD DEVELOPMENT PLAN AND PRELIMINARY PLAN
LOCATED IN THE NW 1/4 OF SECTION 14 & THE NE 1/4 OF SECTION 15, TOWNSHIP 14 SOUTH, RANGE 63 WEST OF THE 6TH P.M.,
EL PASO COUNTY, STATE OF COLORADO.

226105515
11/13/2026

COLORADO LICENSED
JOHN KNEEBONE, MANAGING
PROFESSIONAL ENGINEER
11/13/2026

TRACT SUMMARY TABLE

MAYBERRY PHASE 2 TRACT NAME	SIZE (ACRES)	HATCH LEGEND	LAND USE	OWNERSHIP & MAINTENANCE
FILING 1, TRACT A	1.87		PRIVATE ROAD/SIGNAGE/DRAINAGE/PUBLIC IMPROVEMENT/PUBLIC UTILITY/LANDSCAPING/SIDEWALKS	OWNED BY MAYBERRY METROPOLITAN DISTRICT #4, MAINTAINED BY MAYBERRY METROPOLITAN DISTRICT #1
FILING 1, TRACT B	0.63		PARK/OPEN SPACE/SIGNAGE/HARDSCAPING/ENTRY FEATURE/ DRAINAGE/PUBLIC IMPROVEMENT/PUBLIC UTILITY/LANDSCAPING/SIDEWALKS/ACCESS	OWNED BY MAYBERRY METROPOLITAN DISTRICT #4, MAINTAINED BY MAYBERRY METROPOLITAN DISTRICT #1
FILING 1, TRACT C	0.25		PARK/OPEN SPACE/SIGNANGE/HARDSCAPING/DRAINAGE/PUBLIC IMPROVEMENT/PUBLIC UTILITY/LANDSCAPING/SIDEWALKS/ACCESS	OWNED BY MAYBERRY METROPOLITAN DISTRICT #4, MAINTAINED BY MAYBERRY METROPOLITAN DISTRICT #1
FILING 1, TRACT D	0.20		PARK/OPEN SPACE/SIGNAGE/HARDSCAPING/DRAINAGE/PUBLIC IMPROVEMENT/PUBLIC UTILITY/LANDSCAPING/SIDEWALKS/ACCESS	OWNED BY MAYBERRY METROPOLITAN DISTRICT #4, MAINTAINED BY MAYBERRY METROPOLITAN DISTRICT #1
FILING 1, TRACT E	0.03		PARK/OPEN SPACE/SIGNAGE/HARDSCAPING/DRAINAGE/PUBLIC IMPROVEMENT/PUBLIC UTILITY/LANDSCAPING/SIDEWALKS/ACCESS	OWNED BY MAYBERRY METROPOLITAN DISTRICT #4, MAINTAINED BY MAYBERRY METROPOLITAN DISTRICT #1
TRACT F (EXISTING TRACT O, MAYBERRY, COLORADO SPRINGS, FILING NO. 1)	2.75		PARK/OPEN SPACE/ACTIVE & PASSIVE RECREATION/TEMPORARY EVENTS & VENDORS/SEASONAL ACTIVITIES/SIGNAGE/HARDSCAPING/DRAINAGE/PUBLIC IMPROVEMENT/PUBLIC UTILITY/LANDSCAPING/SIDEWALKS	OWNED BY MAYBERRY METROPOLITAN DISTRICT #3, MAINTAINED BY MAYBERRY METROPOLITAN DISTRICT #1
TRACT G (EXISTING TRACT A, MAYBERRY, COLORADO SPRINGS, FILING NO. 1)	1.04		PARK/OPEN SPACE/ACTIVE & PASSIVE RECREATION/TEMPORARY EVENTS & VENDORS/SEASONAL ACTIVITIES/SIGNAGE/HARDSCAPING/PUBLIC IMPROVEMENT/PUBLIC UTILITY/LANDSCAPING/SIDEWALKS	OWNED BY MAYBERRY METROPOLITAN DISTRICT #4, MAINTAINED BY MAYBERRY METROPOLITAN DISTRICT #1
TRACT H	1.09		PARK/OPEN SPACE/ACTIVE & PASSIVE RECREATION/TEMPORARY EVENTS & VENDORS/SEASONAL ACTIVITIES/SPORT COURTS/CONCESSION STAND/SIGNAGE/HARDSCAPING/DRAINAGE/PUBLIC IMPROVEMENT/PUBLIC UTILITY/LANDSCAPING/SIDEWALKS	OWNED BY MAYBERRY METROPOLITAN DISTRICT #4, MAINTAINED BY MAYBERRY METROPOLITAN DISTRICT #1

NOTES:
1. FILING 1 INCLUDES ONLY MAYBERRY, COLORADO SPRINGS PUD PHASE 1, FILING 1, TRACT K AND THE ABUTTING ROADWAY IMPROVEMENTS (SIDEWALK, CURB & GUTTER, LANDSCAPE, LIGHTING) OF MAYBERRY DRIVE, VILLAGE MAIN, AND MARKETPLACE DRIVE. ALL OTHER FILING BOUNDARIES AND TIMING ARE TBD.

2. ALL LANDSCAPE AREAS WITHIN PUBLIC ROW ARE TO BE MAINTAINED BY MAYBERRY METROPOLITAN DISTRICT #1, TYP.

FILING 1 (MAYBERRY, COLORADO SPRINGS PUD PHASE 1, FILING 1, TRACT K)

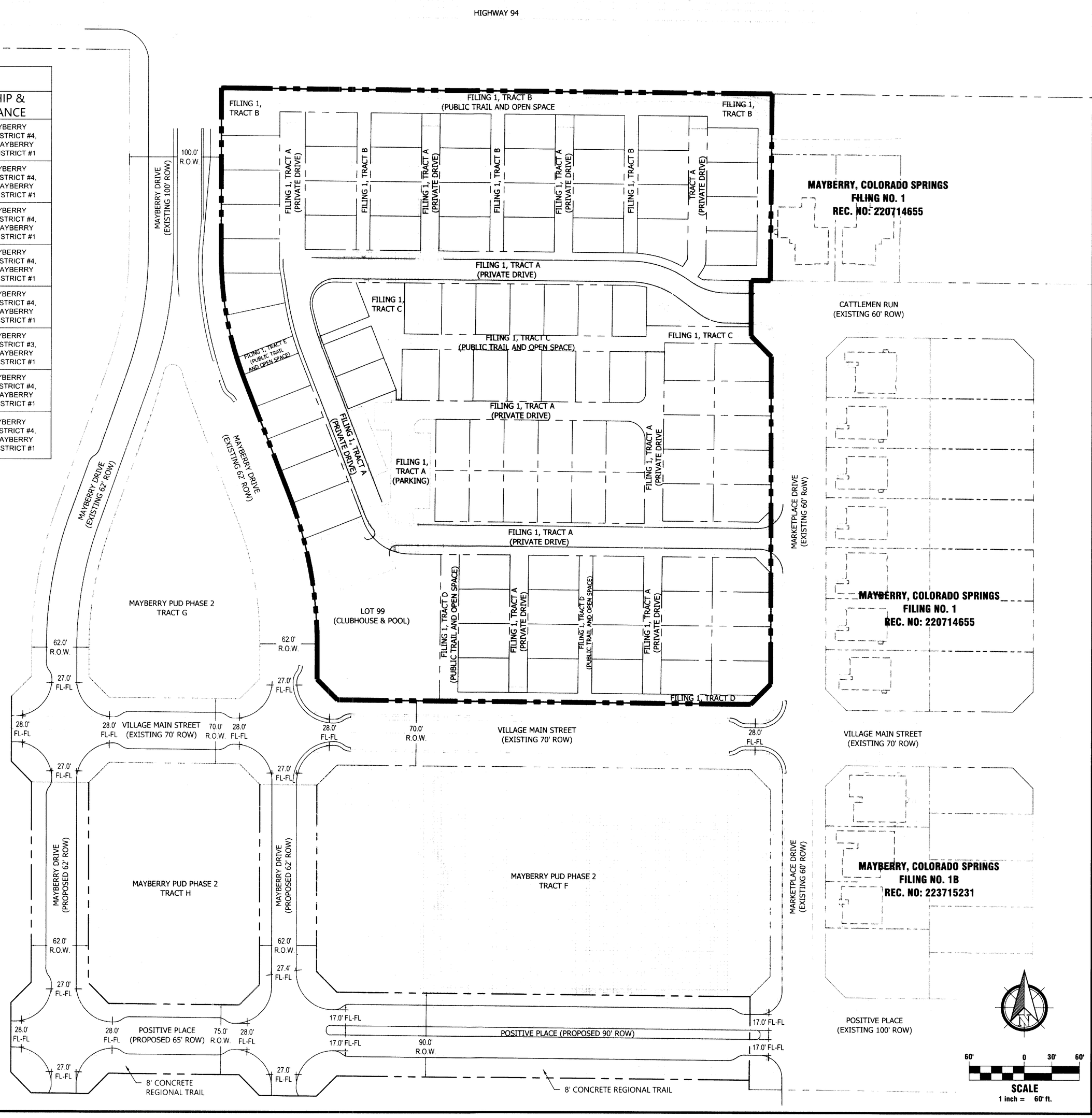

LJA
1765 W. 121st Avenue
Suite 300
Westminster, CO 80234
303-421-4224 • www.lja.com

No.	Rev. Date:	Revision Type:
1		
2		
3		
4		
5		
6		

Designed: WCK
Prepared: WCK
Approved: AKM
Job No.: 8787-0001
Scale Horiz: 1" = 60'
Scale Vert: N/A
Sheet: 7 of 16
Date: September 18, 2026

Proj. Name: Mayberry Phase 2
Location: El Paso County
Plan Set: PUD Development Plan & Preliminary Plan
Sheet Name: TRACT SUMMARY

Client: Mayberry Communities, LLC
Address: 22108 Cattlemen Run Calhan, CO 80808
Contact: Scott Souders

811 Know what's below. Call before you dig.

No. 7

S:\LAND\SW\WEST-CO\8787 - MAYBERRY\8787-0001\PLA\01 ENTITLEMENTS\PUD\SUBMITTAL 4\2026.09.17-MAYBERRY-PUD 2-TRACT SUMMARY PRINTED ON: 9/17/2026 2:30 PM

MAYBERRY PHASE 2

2261055151
11/13/2026

PUD DEVELOPMENT PLAN AND PRELIMINARY PLAN
LOCATED IN THE NW 1/4 OF SECTION 14 & THE NE 1/4 OF SECTION 15, TOWNSHIP 14 SOUTH, RANGE 63 WEST OF THE 6TH P.M.,
EL PASO COUNTY, STATE OF COLORADO.

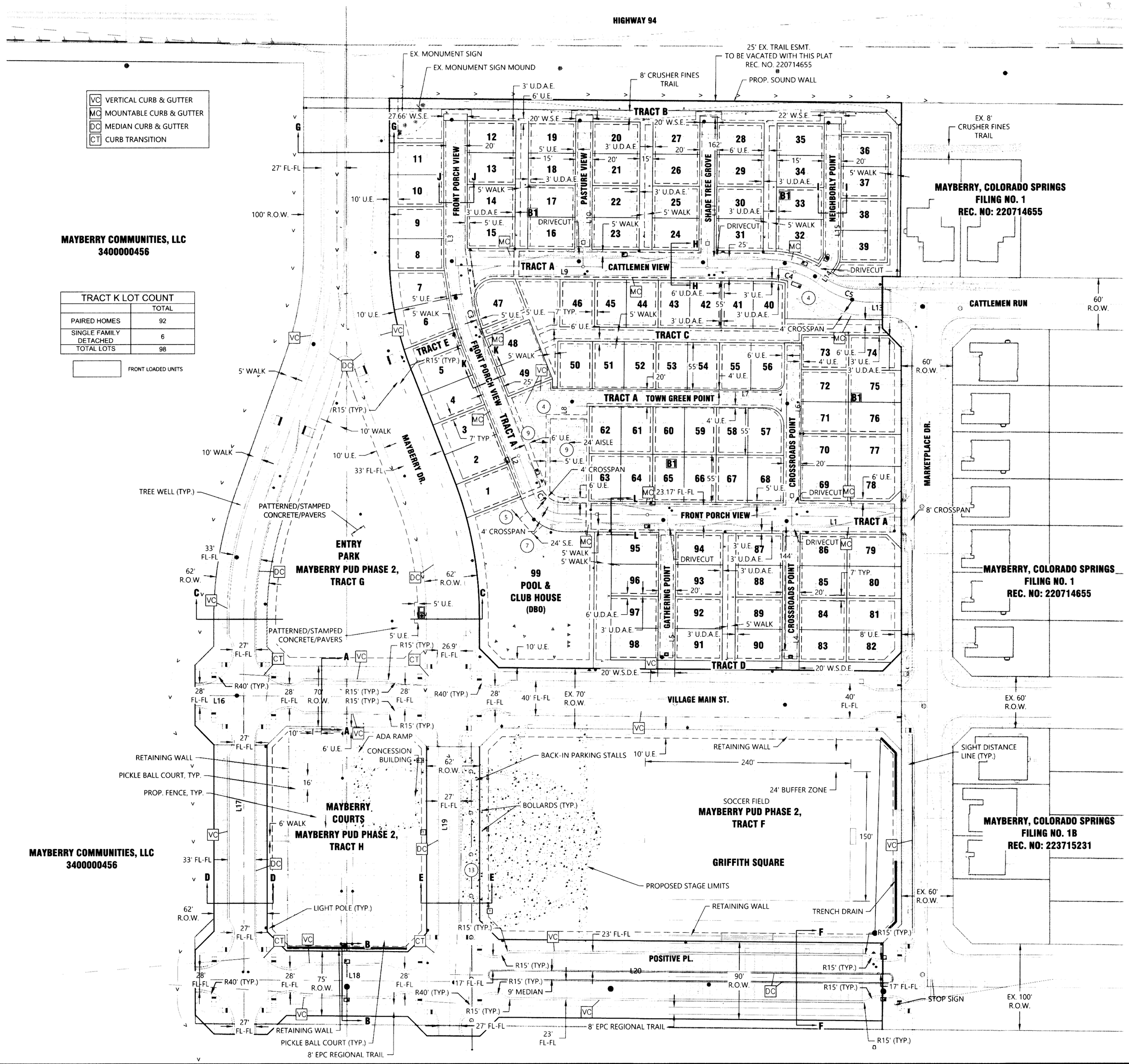

LINE TABLE		
NO.	LENGTH	DIRECTION
L1	397.09'	N89°28'59"W
L2	185.00'	N21°29'20"W
L3	156.72'	N00°01'09"E
L4	172.81'	S00°31'01"W
L5	172.81'	S00°31'01"W
L6	200.00'	S00°31'01"W
L7	271.72'	S89°28'59"E
L8	134.80'	S00°31'01"W
L9	367.19'	N89°28'59"W
L10	174.00'	S00°31'01"W
L11	174.00'	S00°31'01"W
L13	13.64'	N89°29'00"W
L14	28.94'	S34°36'11"W
L15	160.13'	S00°31'01"W
L16	57.00'	N89°28'55"W
L17	392.01'	N00°00'00"E
L18	297.01'	S89°28'59"E
L19	392.01'	S00°00'00"E
L20	505.04'	S89°28'59"E

CURVE TABLE					
NO.	DELTA	LENGTH	RADIUS	CHORD	CH. LENGTH
C1	063°58'24"	42.71'	38.25'	S53°35'00"E	40.52'
C3	018°52'26"	93.88'	285.00'	S12°03'07"E	93.46'
C4	036°02'03"	62.89'	100.00'	N71°27'58"W	61.86'
C5	036°02'03"	62.89'	100.00'	S71°27'58"E	61.86'
C6	034°05'10"	5.95'	10.00'	N17°33'36"E	5.86'

GENERAL ABBREVIATIONS

A.E.	ACCESS EASEMENT
ARV	AIR RELEASE VALVE
BKL	BIKE LANE
BL	BASELINE OF CONSTRUCTION
B.O.	BLOW-OFF
BS	BOTTOM ELEVATION OF RISE
CDS	CUL-DE-SAC
CE	CURB EXTENSION
CL	CENTERLINE
CT	CURB TRANSITION
CWN	CROWN
DBO	DESIGN BY OTHERS
DC	MEDIAN CURB & GUTTER
D.E.	DRAINAGE EASEMENT
D.U.E.	DRAINAGE & UTILITY EASEMENT
ELEC	ELECTRIC
EOP	EDGE OF PAVEMENT
EX	EXISTING
EXCL.	EXCLUSIVE
FES	FLARED END SECTION
FGB	FINISHED GROUND AT BOTTOM WALL ELEVATION
FGT	FINISHED GROUND AT TOP WALL ELEVATION
FH	FIRE HYDRANT
FL	FLOWLINE
FO	FIVER OPTIC LINE
FV	FIELD VERIFY
G	FINISHED GROUND ELEVATION
GAS	GAS LINE
G.E.	GAS EASEMENT
GV	GATE VALVE
HP	HIGH POINT
I.W.E	IRRIGATION & WATER EASEMENT
IWL	IRRIGATION WATER LINE
IWV	IRRIGATION WATER VALVE
LL	LOT LINE
LP	LOW POINT
MAINT.	MAINTENANCE
MC	MOUNTABLE CURB & GUTTER
MH	MANHOLE
(MOD.)	MODIFIED
MSE	MECHANICALLY STABILIZED EARTH
M.U.E.	MULTI-USE EASEMENT
P	PAVEMENT
PC	POINT OF CURVATURE
PCC	POINT OF COMPOUND CURVATURE
PCR	POINT OF CURB RETURN
PGL	PROFILE GRADE LINE
PRC	POINT OF REVERSE CURVATURE
PT	POINT OF TANGENCY
R.O.W.	RIGHT OF WAY
RN	RECORDING NUMBER
(S.)	SUMP INLET
S.E.	SANITARY EASEMENT
SEC	SECTION LINE
SL	SANITARY LINE
SS	SANITARY SERVICE
STBK	SETBACK
SW	SIDEWALK
S.W.I.E.	SANITARY, WATER, AND IRRIGATION EASEMENT
TB	THRUST BLOCK
TC	TOP OF CURB
TELE	TELEPHONE LINE
TR.E	TRANSPORTATION EASEMENT
TR.U.E	TRANSPORTATION & UTILITY EASEMENT
TS	TOP ELEVATION OF RISER
TYP.	TYPICAL
U.D.A.E	UTILITY, DRAINAGE, & ACCESS EASEMENT
U.E.	UTILITY EASEMENT
U.G.E	UTILITY & GAS EASEMENT
VC	VERTICAL CURB & GUTTER
W.E.	WATER EASEMENT
WL	WATER LINE
WS	WATER SERVICE
W.S.D.E.	WATER SANITARY & DRAINAGE EASEMENT
W.S.E.	WATER SURFACE ELEVATION
WV	WATER VALVE

LEGEND

- Property Line
- Right of Way Line
- Centerline
- Lot Line
- Easement Line
- Setback Line
- Retaining Wall
- Swale Line
- Sight Triangle Line
- Storm Manhole
- Type 'R' Inlet
- Sanitary Sewer Manhole
- Fire Hydrant
- Water Valve
- Thrust Block
- Reducer
- Plug & Blow-off
- Street Light
- Bollard Light
- Sign
- Mail Kiosk
- Storm Sewer Line
- Water Line
- Sanitary Sewer Line
- Water Service Line & Meter
- Sanitary Sewer Service Line
- Ex. Sanitary Sewer Line
- Ex. Water Line
- Ex. Storm Sewer Line
- Ex. Gas
- Ex. Underground Electric
- Ex. Overhead Electric
- Proposed Major Contour
- Proposed Minor Contour
- Existing Major Contour
- Existing Minor Contour
- Ex. Asphalt Pavement
- Ex. Concrete Pavement
- Ex. Gravel
- Prop. Asphalt Pavement
- Prop. Mill & Overlay
- Prop. Concrete Pavement
- Prop. Concrete Walk
- Prop. Sight Triangle

SCALE 1 inch = 60 ft. (60 0 30 60)

COLORADO LICENSED ANNE KLEBONE WILLIAMS 35781 11/10/26 PROFESSIONAL ENGINEER

LJA
1765 W. 121st Avenue
Suite 300
Westminster, CO 80234
303-421-4224 • www.lja.com

Revision Type:

No.	Rev. Date:
1	
2	
3	
4	
5	
6	

Designed: WCK
Prepared: WCK
Approved: AKM

Job No.: 8787-0001
Scale Horiz: 1" = 60'
Scale Vert: N/A

Sheet: 8 of 16
Date: September 18, 2026

Proj. Name: Mayberry Phase 2
Location: El Paso County
Plan Set: PUD Development Plan & Preliminary Plan
Sheet Name: Overall Site Plan

Client: Mayberry Communities, LLC
Address: 22108 Cattlemen Run Calhan, CO 80808
Contact: Scott Souders

811 Know what's below. Call before you dig.

No. 8

S:\LAND\SW\WEST-CO\8787 - MAYBERRY\8787-0001\ENGINEERING\04 DRAWINGS\PRELIMINARY PLANS\PUD\8787-0001 OVERALL SITE PLAN PRINTED ON: 9/21/2026 3:38 PM

226105515
11/13/2026

COLORADO LICENSE
ALEXANDER K. MACKEY
NO. 55781
11/10/2026
PROFESSIONAL ENGINEER

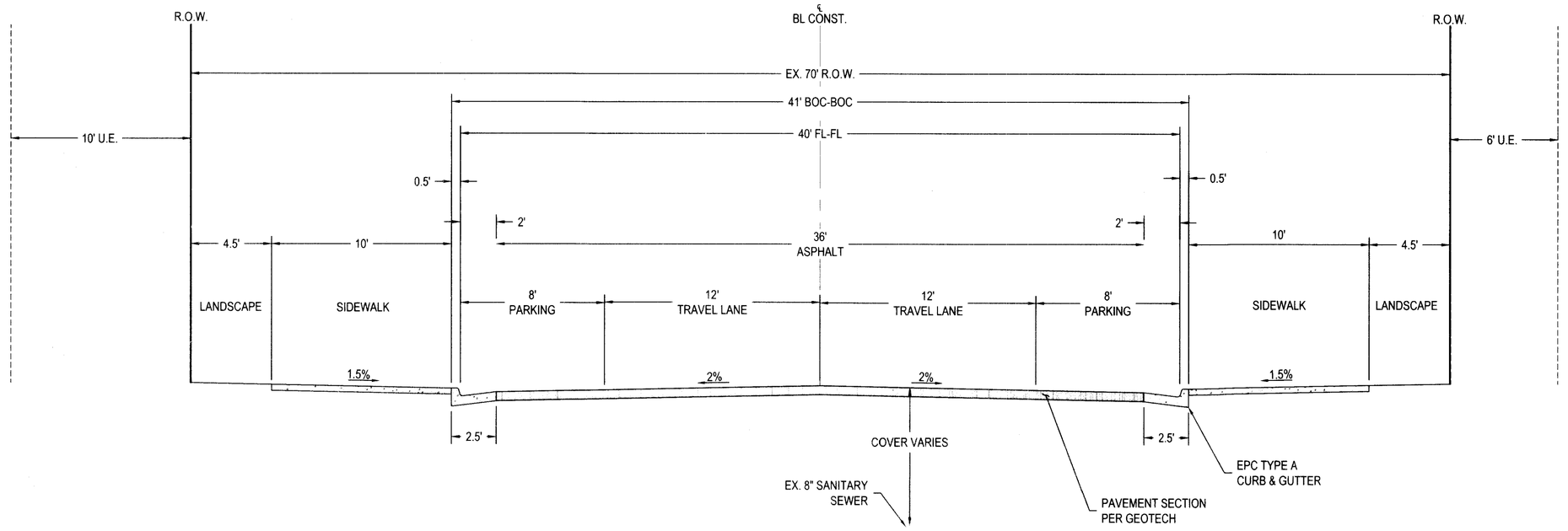

VILLAGE MAIN STREET COMMERCIAL SECTION A-A
APPROVED WITH MAYBERRY PHASE 1 PUD
DESIGN SPEED: 30 MPH
POSTED SPEED: 25 MPH
(URBAN LOCAL ROADWAY)
SCALE: 1" = 5'

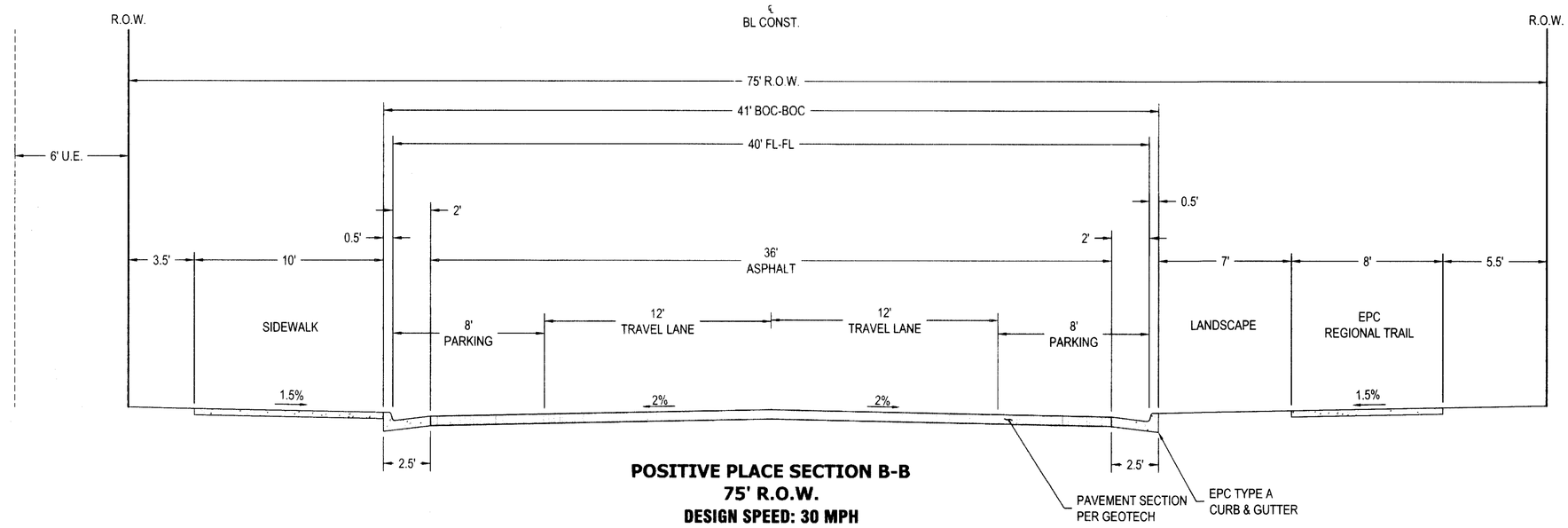

POSITIVE PLACE SECTION B-B
75' R.O.W.
DESIGN SPEED: 30 MPH
POSTED SPEED: 25 MPH
(URBAN RESIDENTIAL COLLECTOR)
SCALE: 1" = 5'

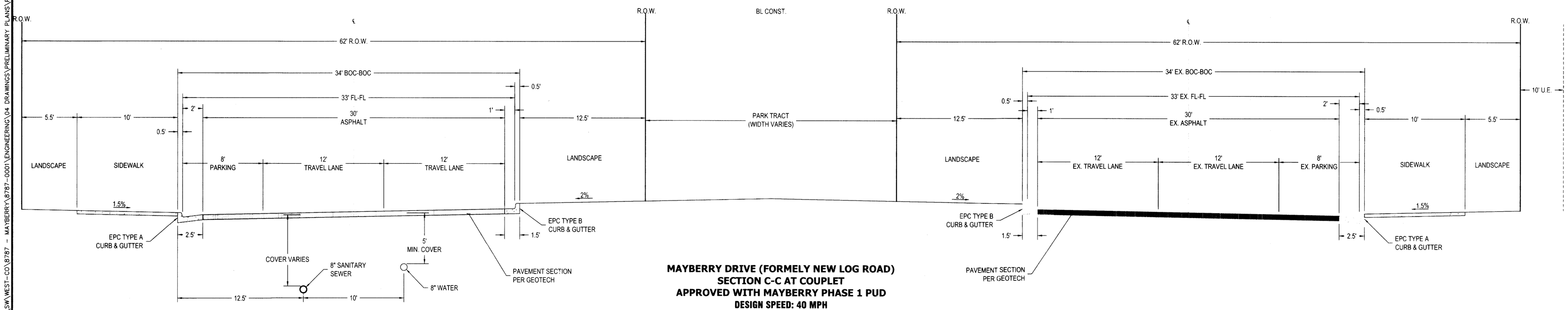

MAYBERRY DRIVE (FORMELY NEW LOG ROAD)
SECTION C-C AT COUPLET
APPROVED WITH MAYBERRY PHASE 1 PUD
DESIGN SPEED: 40 MPH
POSTED SPEED: 30 MPH
(MINOR ARTERIAL)
SCALE: 1" = 5'

LJA
1765 W. 121st Avenue
Suite 300
Westminster, CO 80234
303-421-4224 • www.lja.com

No.	Rev. Date:
1	
2	
3	
4	
5	
6	

Revision Type:

Designed: JAV
Prepared: WCK
Approved: AKM

Job No.: 8787.0002
Scale Horiz: N/A
Scale Vert: N/A

Sheet: 9 of 16
Date: September 18, 2026

Proj. Name: Mayberry Phase 2 PUD, Filing 1
Location: El Paso County
Plan Set: Construction Documents
Sheet Name: Road Cross Sections

Client: Mayberry Communities, LLC
Address: 22108 Cattlemen Run
Calhan, CO 80808
Contact: Scott Souders

811 Know what's below. Call before you dig.

No. 9

S:\LAND\SW WEST-CO\8787 - MAYBERRY\8787-0001\ENGINEERING\04 DRAWINGS\PRELIMINARY PLANS\PUD\8787-0001 ROAD SECTIONS PRINTED ON: 9/21/2026 3:39 PM

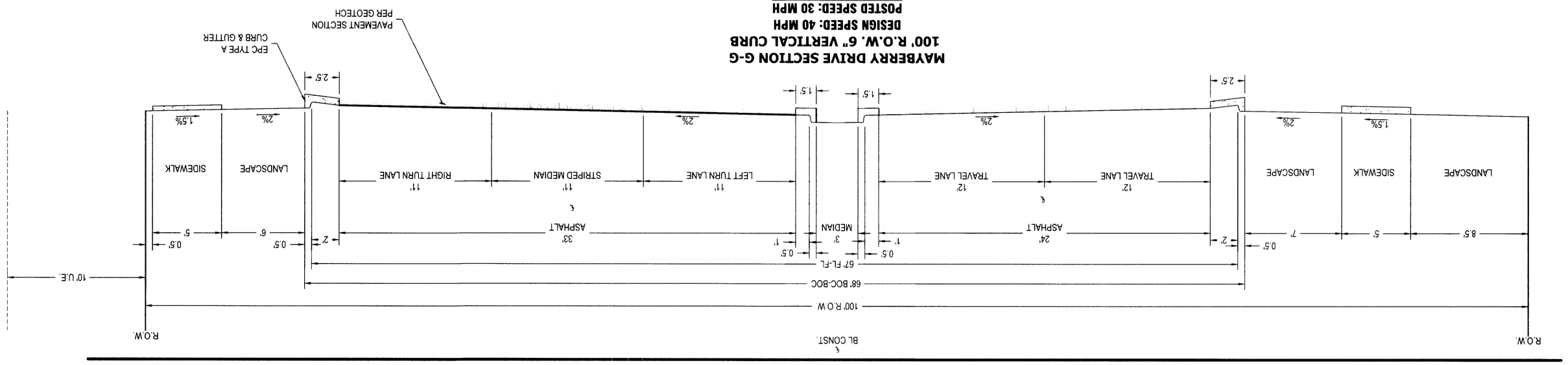

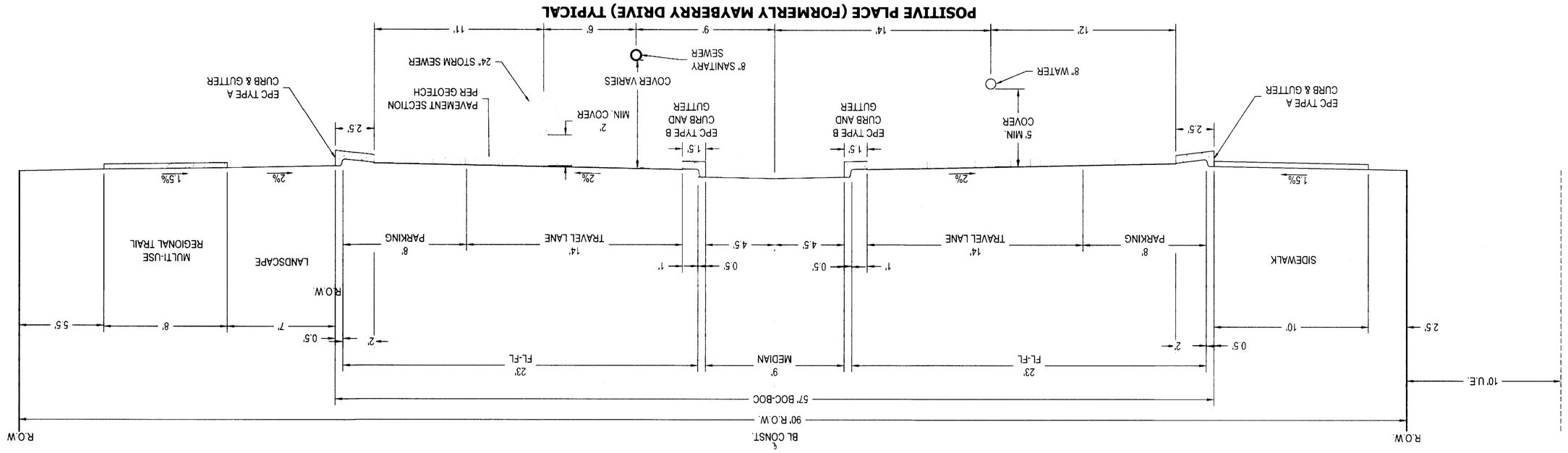

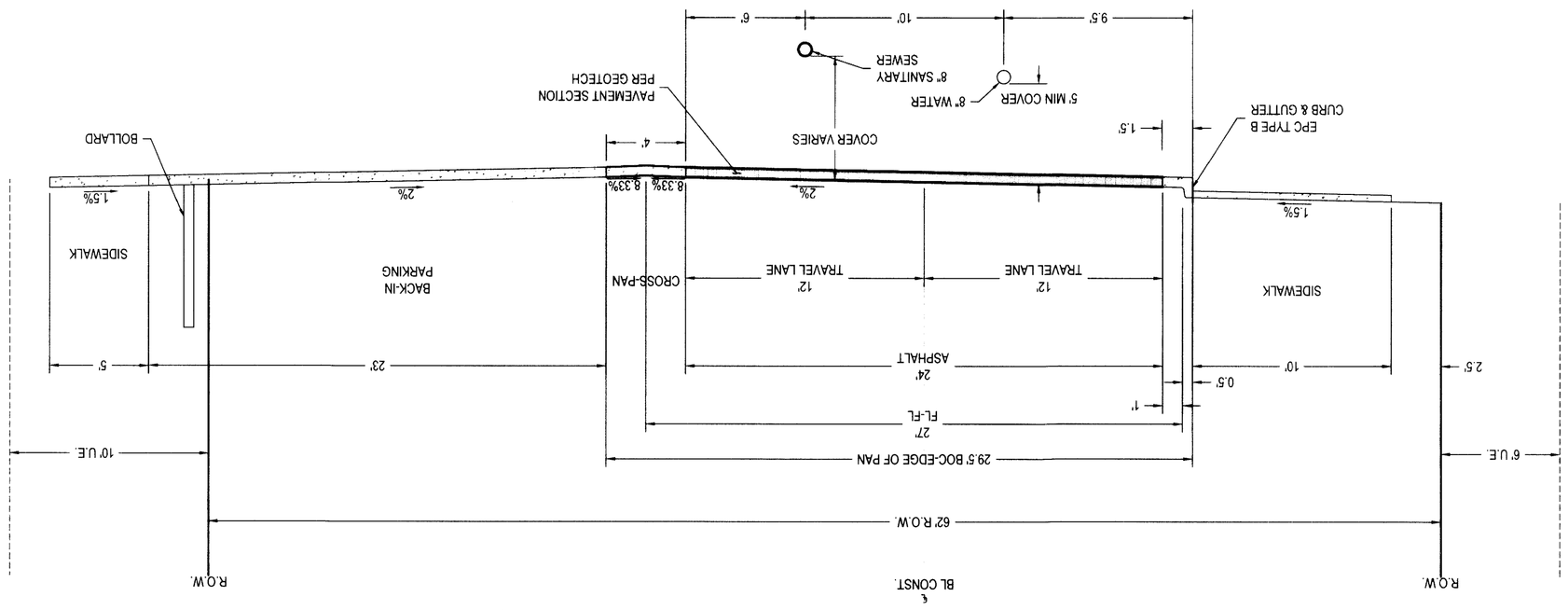

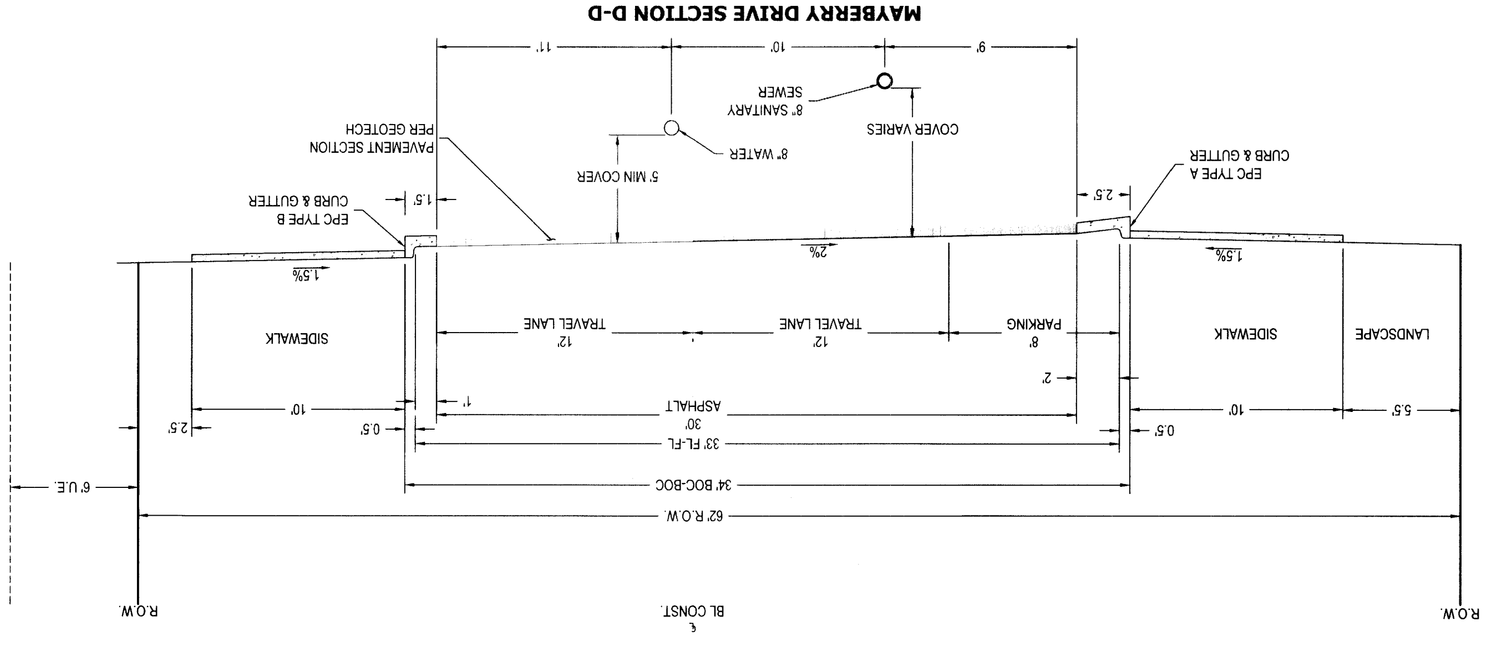

11/13/2026 3261055IS

S:\LAND\SW\WEST-CO\8787 - MAYBERRY\8787-0001\ENGINEERING\04 DRAWINGS\PRELIMINARY PLANS\PUD\8787-0001 ROAD SECTIONS PRINTED ON: 9/22/2026 3:39 PM

17765 W. 121st Avenue
Suite 300
Westminster, CO 80234
303-421-4224 • www.jfa.com

Prog. Name:

Mayberry Phase 2 PUD, Filing 1

Location:

El Paso County

Plan Set:

Construction Documents

Sheet Name:

Road Cross Sections

Designed:	JAV
Prepared:	WCK
Approved:	AKM
Scale Horiz:	N/A
Scale Vert:	N/A
Job No:	8787.0002
Sheet:	10 of 16
Date:	September 18, 2026

No.	Rev. Date	Revision Type:
1		
2		
3		
4		
5		
6		

Client:
Mayberry Communities, LLC

Address:
22108 Cattleman Run
Calhan, CO 80808

Contact:
Scott Souders

Know what's below.
Call before you dig.

811

No. 10

S:\LAND\SW WEST-CO\8787 - MAYBERRY\8787-0001\ENGINEERING\04 DRAWINGS\PRELIMINARY PLANS\PUD\8787-0001 ROAD SECTIONS PRINTED ON: 9/21/2026 3:39 PM

PRIVATE DRIVE SECTION K-K
28.5' TRACT 6" ROLL OVER CURB
CATTLEMEN VIEW
NO ONSTREET PARKING ALLOWED
DESIGN SPEED: 10 MPH
POSTED SPEED: 5 MPH
SCALE: 1" = 5'

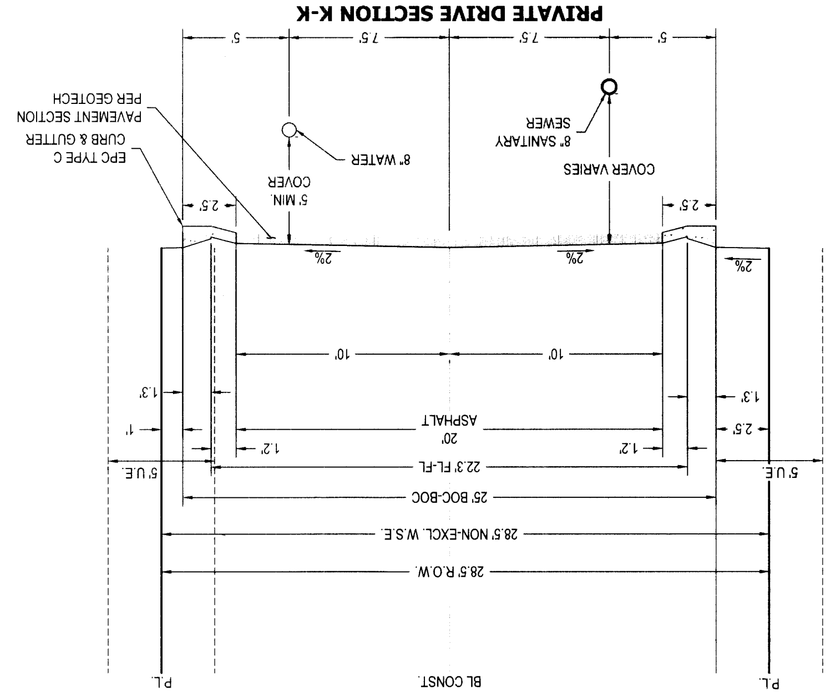

PRIVATE DRIVE SECTION L-L
35.5' TRACT 6" VERTICAL CURB AND 6" ROLL OVER CURB
CATTLEMEN VIEW
NO ONSTREET PARKING ALLOWED
DESIGN SPEED: 10 MPH
POSTED SPEED: 5 MPH
SCALE: 1" = 5'

*3' U.E. & 3' U.D.A.E. TO APPLY TO THIS SECTION WHERE SIDE OF HOUSE ABUTS STREET.

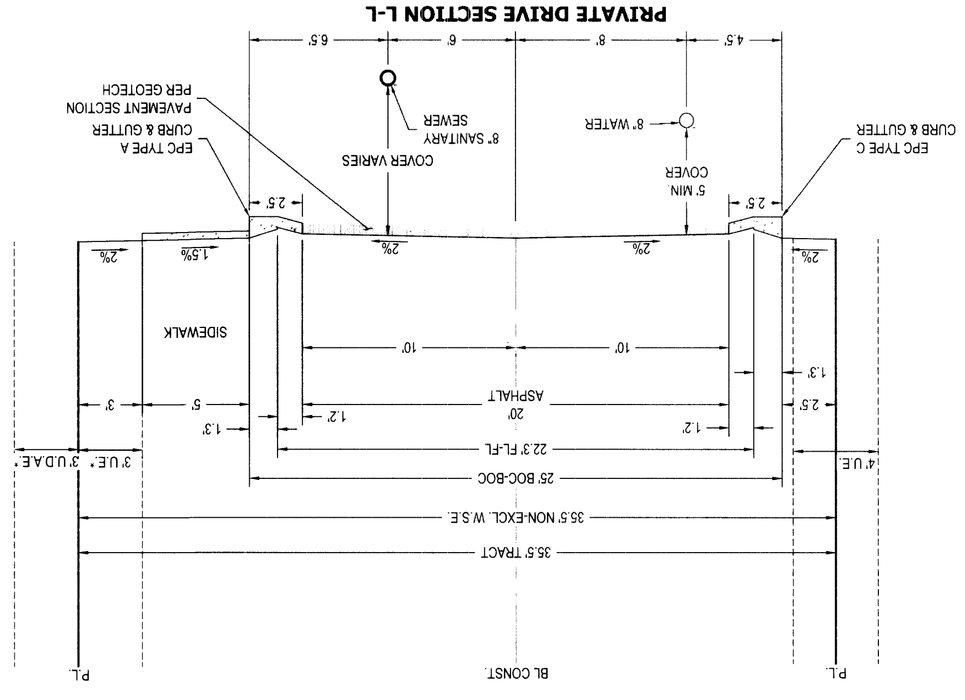

TYP. SIDE LOT SWALE SECTION M-M
N.T.S.

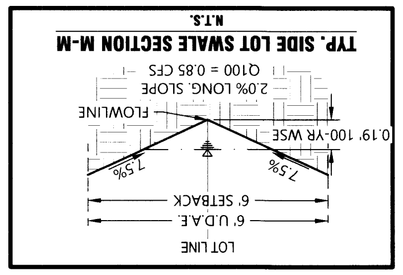

*TOWN GREEN POINT MAY HAVE 4' U.E. EITHER SIDE WHERE ALLEY LOADED. PORTION OF CROSSROADS POINT ENCOMPASSED BY CATTLEMEN VIEW MAY HAVE 6' U.E. ON WEST. 4' U.E. ON EAST.

PRIVATE DRIVE B SECTION H-H
35' TRACT 6" VERTICAL CURB AND 6" ROLL OVER CURB
CATTLEMEN VIEW
NO ONSTREET PARKING ALLOWED
DESIGN SPEED: 10 MPH
POSTED SPEED: 5MPH
SCALE: 1" = 5'

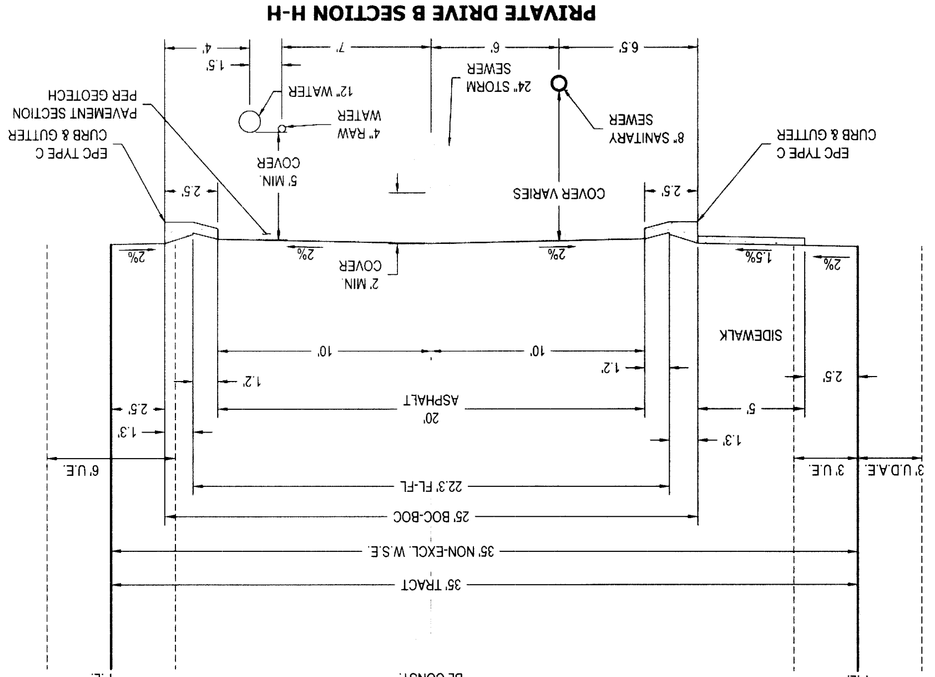

PRIVATE DRIVE SECTION I-I
20' TRACT INVERTED CROWN
PASTURE VIEW, SHADE TREE GROVE, CROSSROADS POINT*, GATHERING POINT, TOWN GREEN POINT.*
NO ONSTREET PARKING ALLOWED
DESIGN SPEED: 10 MPH
POSTED SPEED: 5 MPH
SCALE: 1" = 5'

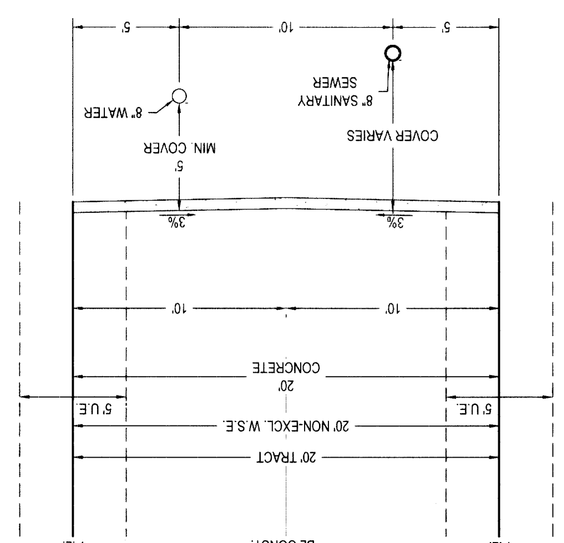

PRIVATE DRIVE SECTION J-J
26' TRACT 6" ROLL OVER CURB
FRONT PORCH VIEW
NO ONSTREET PARKING ALLOWED
DESIGN SPEED: 10 MPH
POSTED SPEED: 5 MPH
SCALE: 1" = 5'

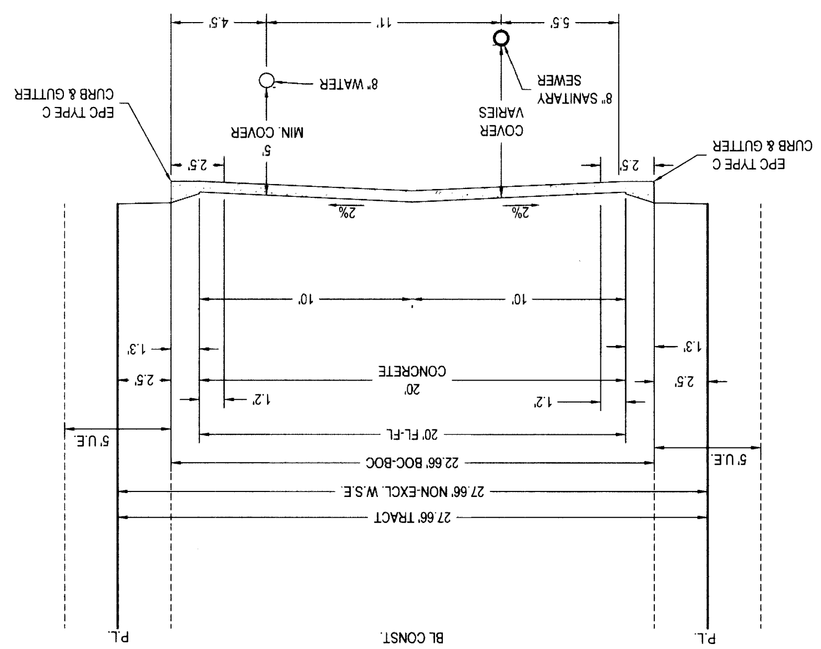

17765 W. 117st Avenue
Suite 300
Westminster, CO 80234
303-421-4224 • www.jla.com

Prepared:	JAV
Designed:	WCK
Approved:	ARM
Scale Horiz:	1" = 40'
Scale Vert:	N/A
Job No:	8787-0002
Date:	September 18, 2026
Sheet:	11 of 16

No.	Rev. Date:	Revision Type:
1		
2		
3		
4		
5		
6		

Proj. Name:
Mayberry Phase 2 PUD, Filing 1
Location:
El Paso County
Plan Set:
Construction Documents
Sheet Name:
Road Cross Sections

Client:
Mayberry Communities, LLC
Address:
22108 Cattlemen Run
Calhan, CO 80808
Contact:
Scott Souders

Know what's below.
Call before you dig.

No.	
11	

PROFESSIONAL ENGINEER
COLORADO
Wade C. Kirkham
11/13/2026

224105515

MAYBERRY PHASE 2

226105515
11/13/2026

PUD DEVELOPMENT PLAN AND PRELIMINARY PLAN
LOCATED IN THE NW 1/4 OF SECTION 14 & THE NE 1/4 OF SECTION 15, TOWNSHIP 14 SOUTH, RANGE 63 WEST OF THE 6TH P.M.,
EL PASO COUNTY, STATE OF COLORADO.

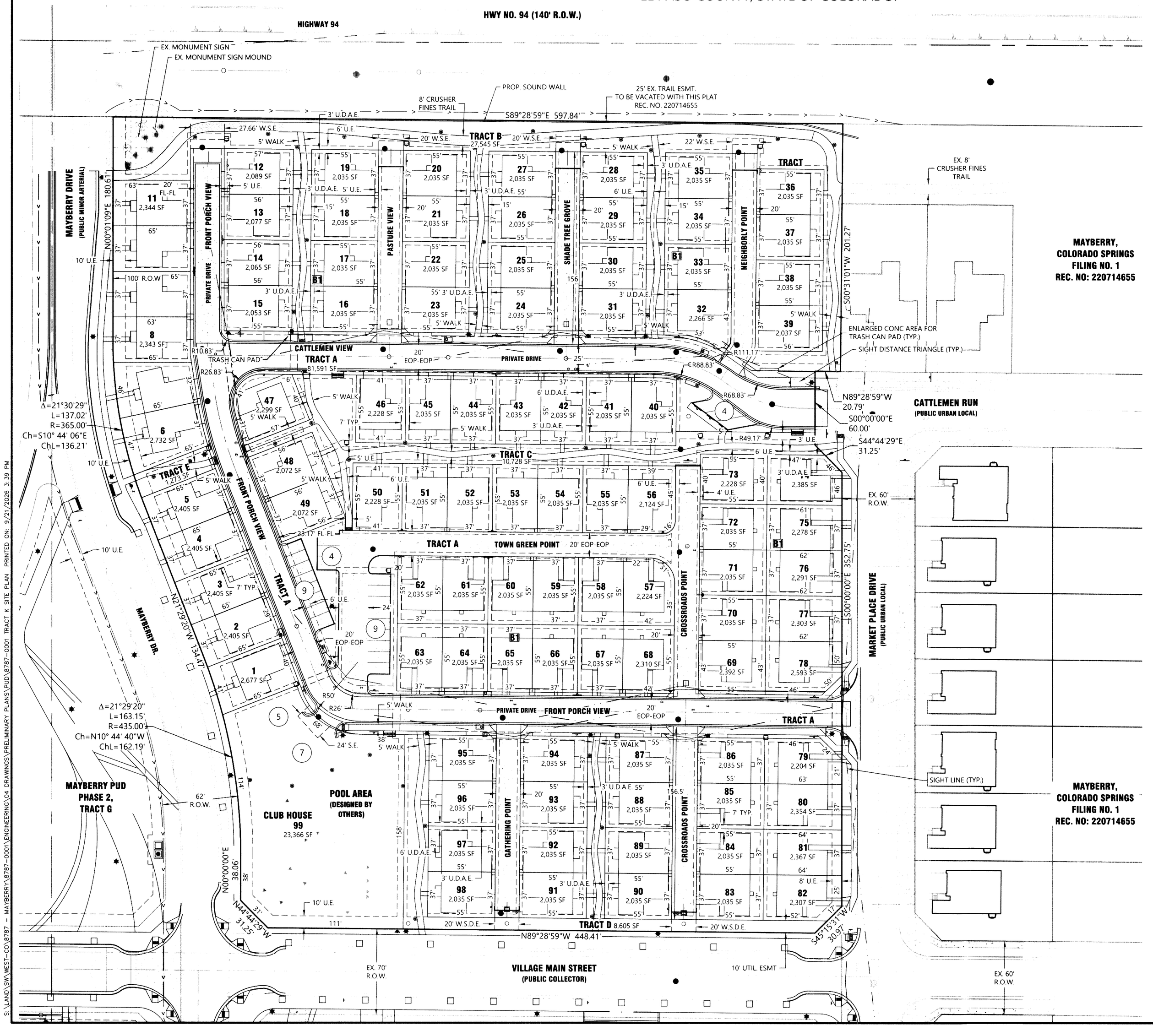

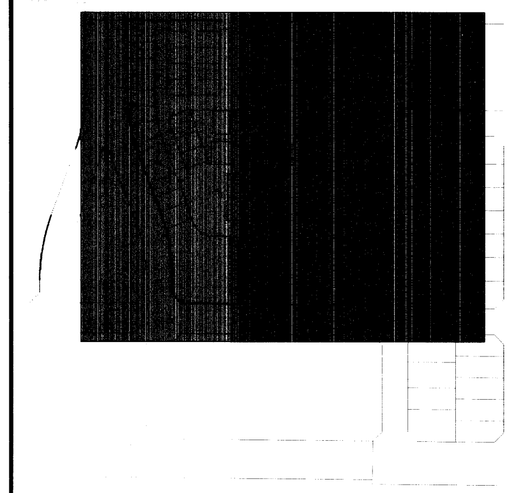

KEY MAP
1"= 250'

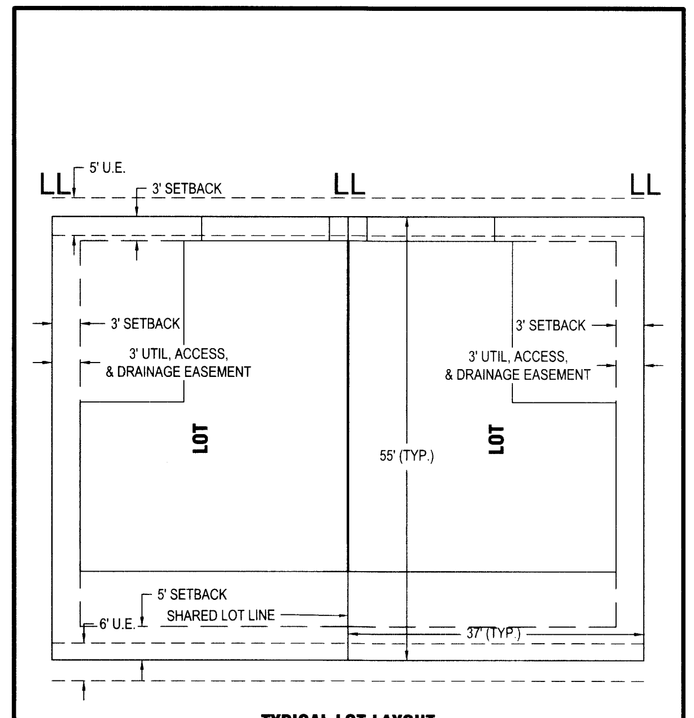

TYPICAL LOT LAYOUT
N.T.S.

FIRE LANE LEGEND

R8-31 12" X 18"	R8-31L 12" X 18"	R8-31R 12" X 18"	CUSTOM
FIRE LANE	FIRE LANE	FIRE LANE	LIMIT OF FIRE DEPARTMENT ACCESS

1. NO PARKING SIGNS WILL BE PLACED ALONG THE INTERNAL ROADWAYS DURING THE FINAL PLAT PROCESS
2. 'LIMIT OF FIRE DEPARTMENT ACCESS' SIGNAGE WILL BE PLACED WHERE NECESSARY TO RESTRICT FIRE APPARATUS TRAVEL DURING THE FINAL PLAT PROCESS

SPEED LIMIT 5
R2-1
24" X 30"

COLORADO LICENSED PROFESSIONAL ENGINEER
35781
11/10/2026

40 0 20 40
SCALE
1 inch = 40 ft.

811 Know what's below. Call before you dig.

LJA
1765 W. 121st Avenue
Suite 300
Westminster, CO 80234
303-421-4224 • www.lja.com

No.	Revision Type:	Rev. Date:
1		
2		
3		
4		
5		
6		

Designed: WCK
Prepared: WCK
Approved: AKM
Job No.: 8787-0001
Scale Horiz: 1" = 40'
Scale Vert: N/A
Sheet: 12 of 16
Date: September 18, 2026

Proj. Name: Mayberry Phase 2
Location: El Paso County
Plan Set: PUD Development Plan & Preliminary Plan
Sheet Name: Tract K Site Plan

Client: Mayberry Communities, LLC
Address: 22108 Cattlemen Run Calhan, CO 80808
Contact: Scott Souders

No. 12

S:\LAND\SW WEST-CO\8787 - MAYBERRY\8787-0001\ENGINEERING\04 DRAWINGS\PRELIMINARY PLANS\PUD\8787-0001 TRACT K SITE PLAN PRINTED ON: 9/21/2025 3:39 PM

MAYBERRY PHASE 2

2261058 IS
11/13/2026

PUD DEVELOPMENT PLAN AND PRELIMINARY PLAN
LOCATED IN THE NW 1/4 OF SECTION 14 & THE NE 1/4 OF SECTION 15, TOWNSHIP 14 SOUTH, RANGE 63 WEST OF THE 6TH P.M.,
EL PASO COUNTY, STATE OF COLORADO.

COLORADO LICENSED PROFESSIONAL ENGINEER
Alexander Kenny
35781
11/10/2026

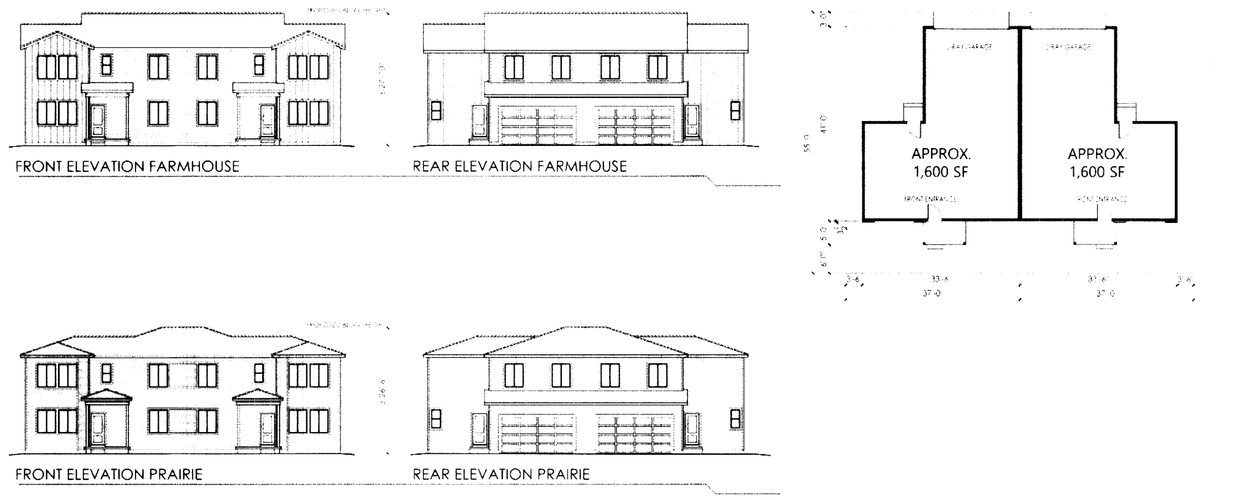

OPTION A

REAR-LOADED PAIRED HOME

02.07.2025

MAYBERRY SINGLE FAMILY ATTACHED HOMES | MAYBERRY COLORADO SPRINGS
COLORADO SPRINGS, COLORADO

IFAB 2401

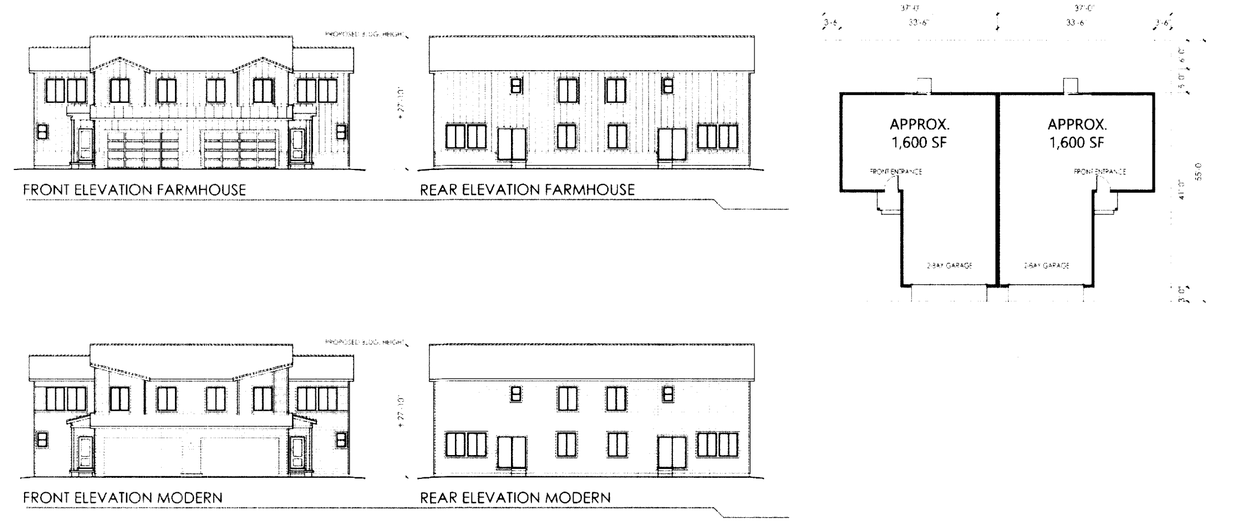

OPTION B

FRONT-LOADED PAIRED HOME

02.07.2025

MAYBERRY SINGLE FAMILY ATTACHED HOMES | MAYBERRY COLORADO SPRINGS
COLORADO SPRINGS, COLORADO

IFAB 2401



OPTION C

REAR-LOADED DETACHED

02.07.2025

MAYBERRY SINGLE FAMILY DETACHED HOMES | MAYBERRY COLORADO SPRINGS
COLORADO SPRINGS, COLORADO

IFAB 2401

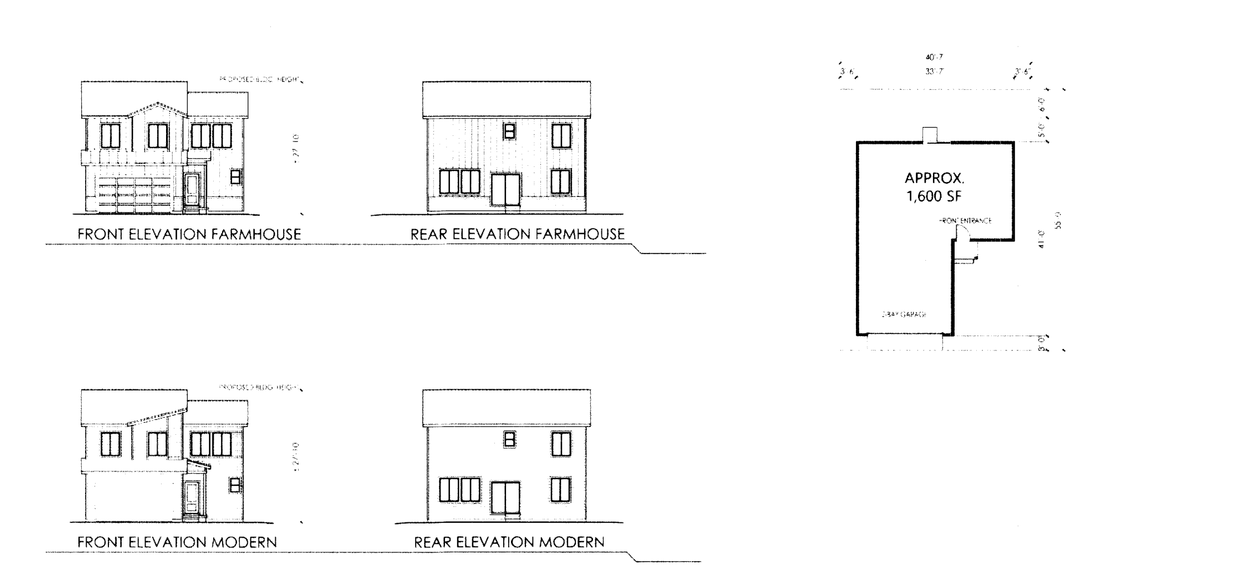

OPTION D

FRONT-LOADED DETACHED

02.07.2025

MAYBERRY SINGLE FAMILY DETACHED HOMES | MAYBERRY COLORADO SPRINGS
COLORADO SPRINGS, COLORADO

IFAB 2401

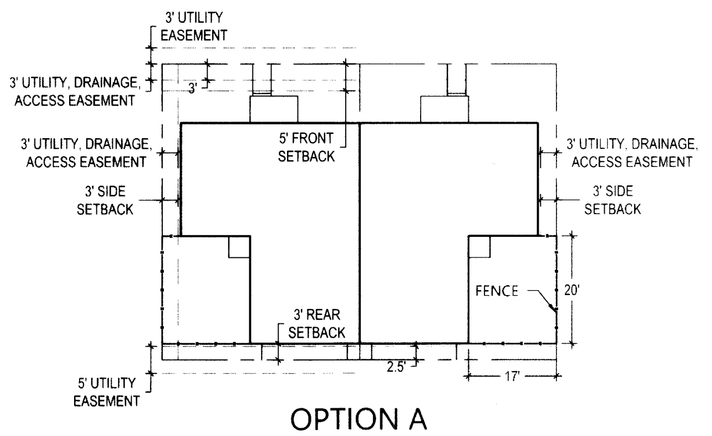

OPTION A

REAR-LOADED SINGLE-FAMILY ATTACHED
FENCE LAYOUT*
SCALE: NTS

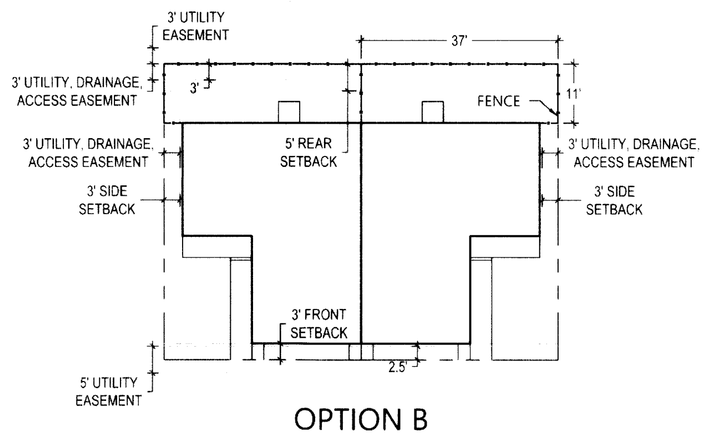

OPTION B

FRONT-LOADED SINGLE-FAMILY ATTACHED
FENCE LAYOUT*
SCALE: NTS

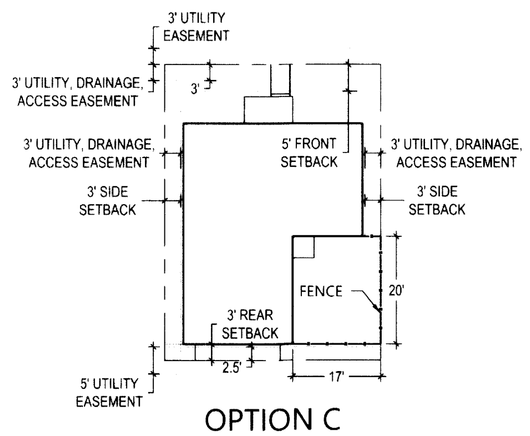

OPTION C

REAR-LOADED SINGLE-FAMILY DETACHED
FENCE LAYOUT*
SCALE: NTS

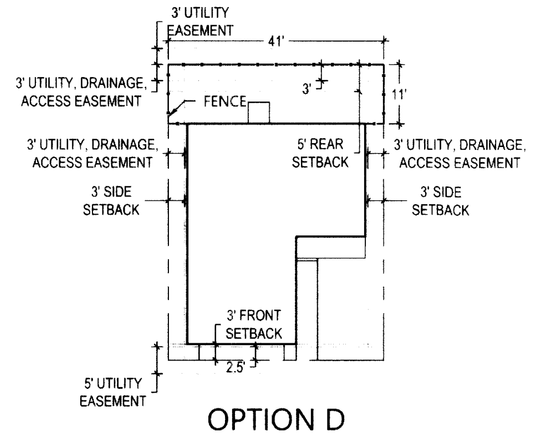

OPTION D

FRONT-LOADED SINGLE-FAMILY DETACHED
FENCE LAYOUT*
SCALE: NTS

* SEE SHEET 7 OF THE MAYBERRY PHASE 2 LANDSCAPE PLAN SET FOR FENCE AND GATE DETAILS

LJA
1765 W. 121st Avenue
Suite 300
Westminster, CO 80234
303-421-4224 • www.lja.com

No.	Rev. Date:	Revision Type:
1		
2		
3		
4		
5		
6		

Designed: WCK
Prepared: WCK
Approved: AKM
Job No.: 8787-0001
Scale Horiz: N/A
Scale Vert: N/A
Sheet: 13 of 16
Date: September 18, 2026

Proj Name: Mayberry Phase 2
Location: El Paso County
Plan Set: PUD Development Plan & Preliminary Plan
Sheet Name: LOT DETAILS

Client: Mayberry Communities, LLC
Address: 22108 Cattlemen Run
Calhan, CO 80808
Contact: Scott Souders

811 Know what's below. Call before you dig.

No. 13

S:\LAND\SW WEST-CO\8787 - MAYBERRY\8787-0001\PLA\01 ENTITLEMENTS\PUD\SUBMITTAL A\2026.09.17-MAYBERRY-PUD 2-LOT DETAILS PRINTED ON: 9/17/2026 2:32 PM

MAYBERRY PHASE 2

226105515
11/13/2026

PUD DEVELOPMENT PLAN AND PRELIMINARY PLAN
LOCATED IN THE NW 1/4 OF SECTION 14 & THE NE 1/4 OF SECTION 15, TOWNSHIP 14 SOUTH, RANGE 63 WEST OF THE 6TH P.M.,
EL PASO COUNTY, STATE OF COLORADO.

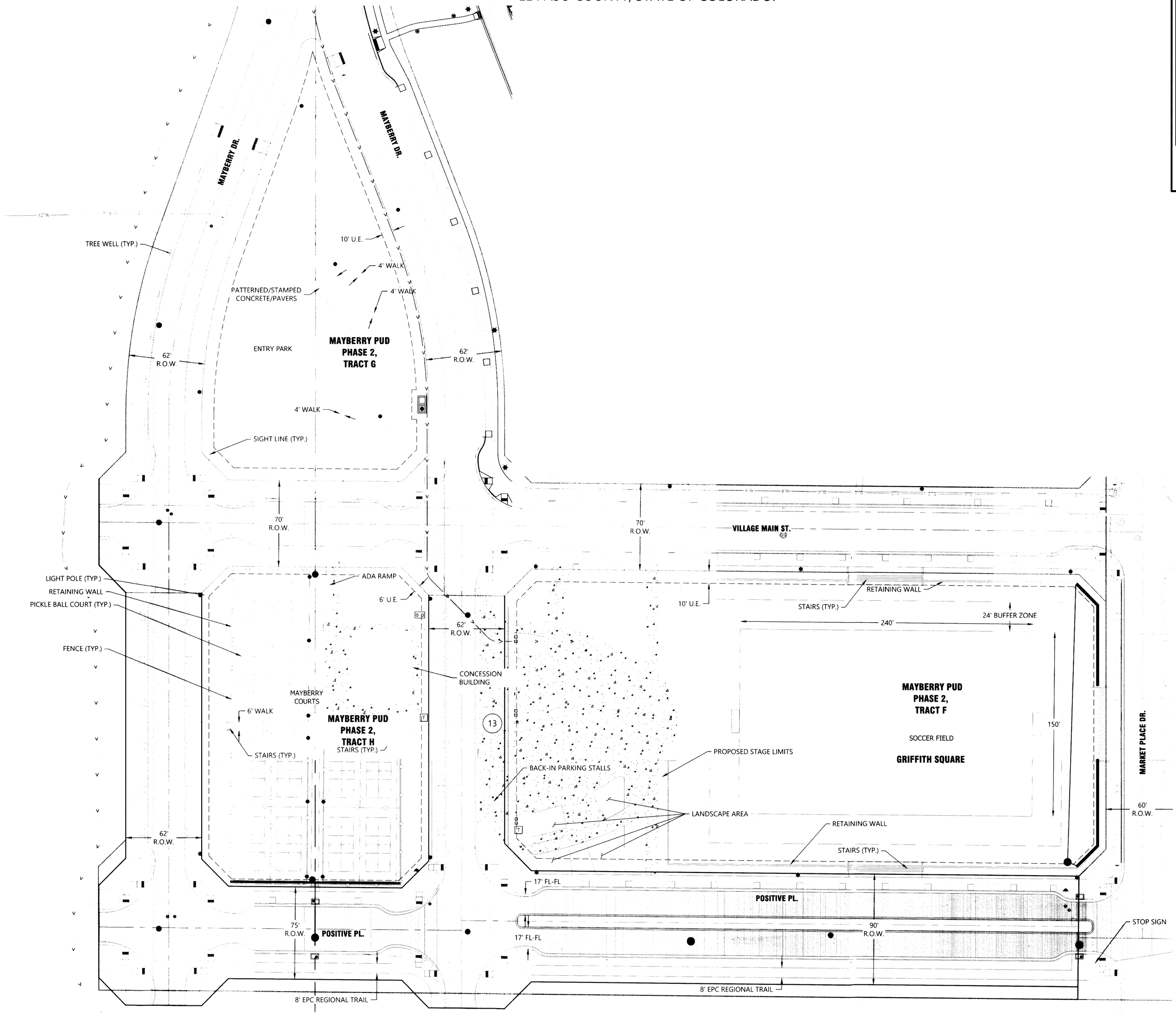

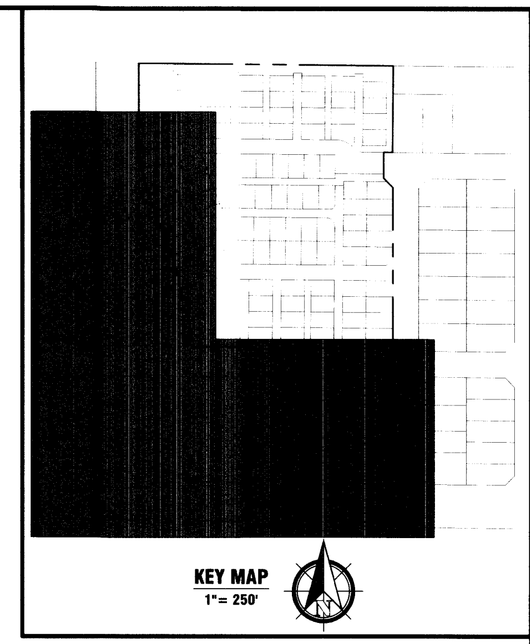

COLORADO LICENSED
ALAN KINGSBORE
35781
PROFESSIONAL ENGINEER
11/10/2026

40 0 20 40
SCALE
1 inch = 40 ft.

LJA

1765 W. 121st Avenue
Suite 300
Westminster, CO 80234
303-421-4224 • www.lja.com

No.	Rev. Date:	Revision Type:
1		
2		
3		
4		
5		
6		

Designed: WCK
Prepared: WCK
Approved: AKM

Job No.: 8787-0001
Scale Horiz: 1" = 40'
Scale Vert: N/A

Sheet: 14 of 16
Date: September 18, 2026

Proj. Name: Mayberry Phase 2
Location: El Paso County
Plan Set: PUD Development Plan & Preliminary Plan
Sheet Name: Parks Site Plan

Client: Mayberry Communities, LLC
Address: 22108 Cattlemen Run Calhan, CO 80808
Contact: Scott Souders

811
Know what's below.
Call before you dig.

No. 14

S:\LAND\SW\WEST-CO\8787 - MAYBERRY\8787-0001\ENGINEERING\04 DRAWINGS\PRELIMINARY PLANS\PUD\8787-0001 PARKS SITE PLAN PRINTED ON: 9/17/2026 3:55 PM

MAYBERRY PHASE 2

PUD DEVELOPMENT PLAN AND PRELIMINARY PLAN
LOCATED IN THE NW 1/4 OF SECTION 14 & THE NE 1/4 OF SECTION 15, TOWNSHIP 14 SOUTH, RANGE 63 WEST OF THE 6TH P.M.,
EL PASO COUNTY, STATE OF COLORADO.

226105615
11/13/2026

COLORADO LICENSED
AMEEBENE K. MOSHER
35781
9/10/2026
PROFESSIONAL ENGINEER

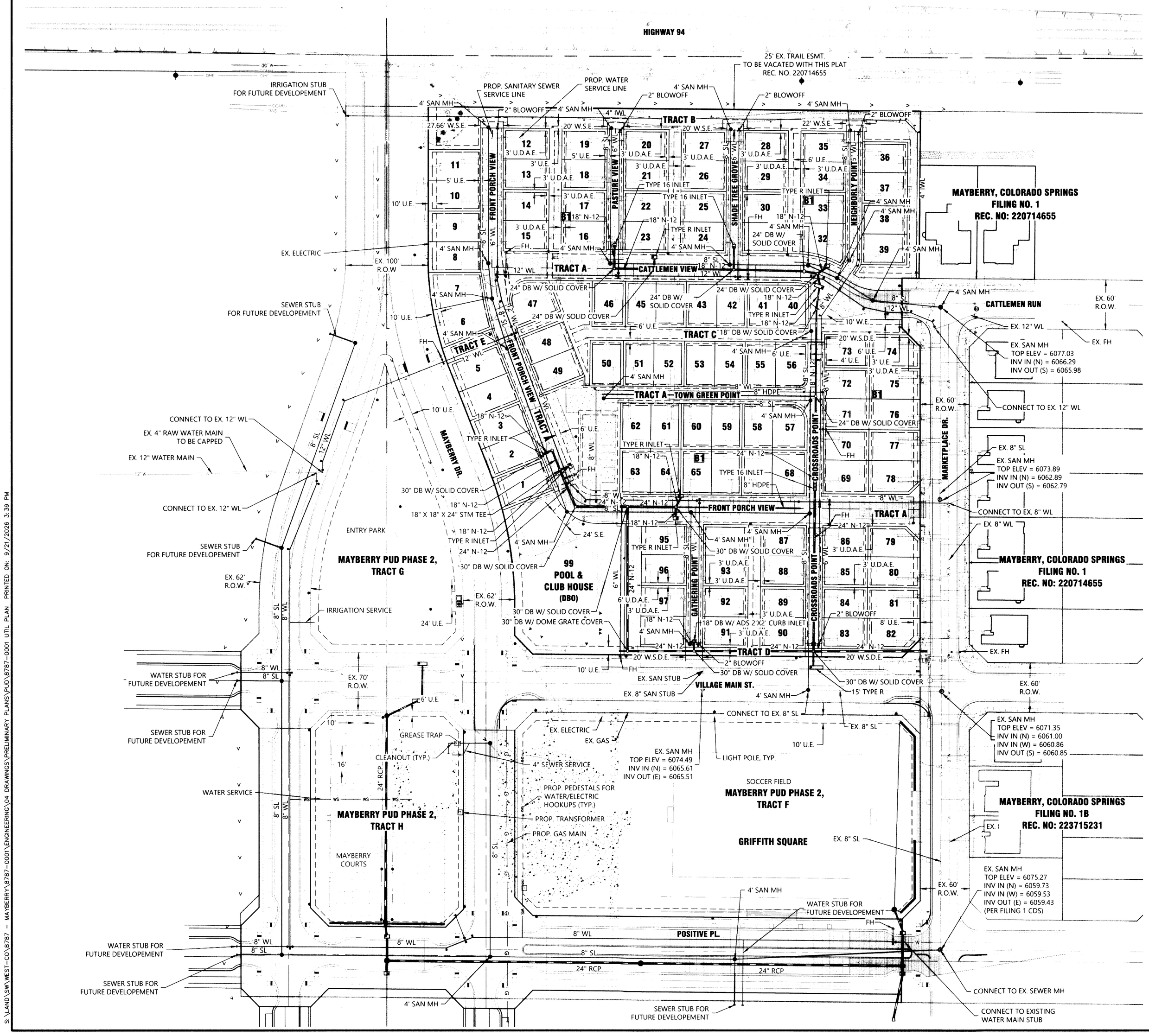

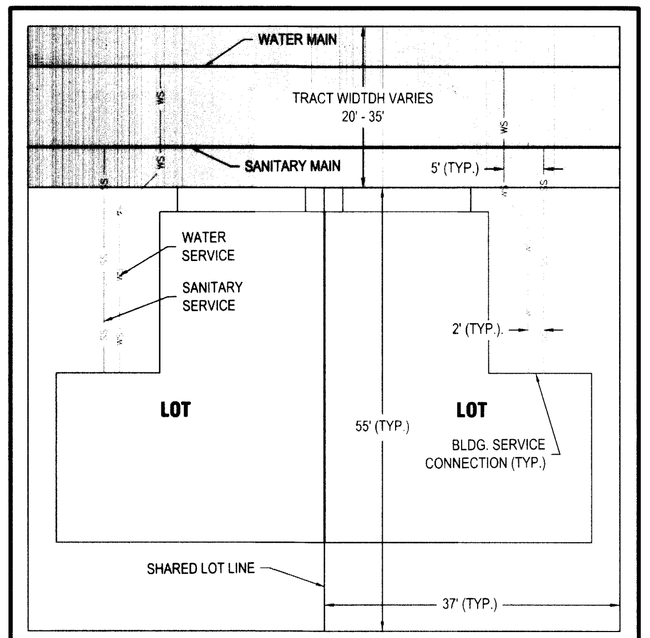

TYPICAL UTILITY SERVICE LAYOUT N.T.S.

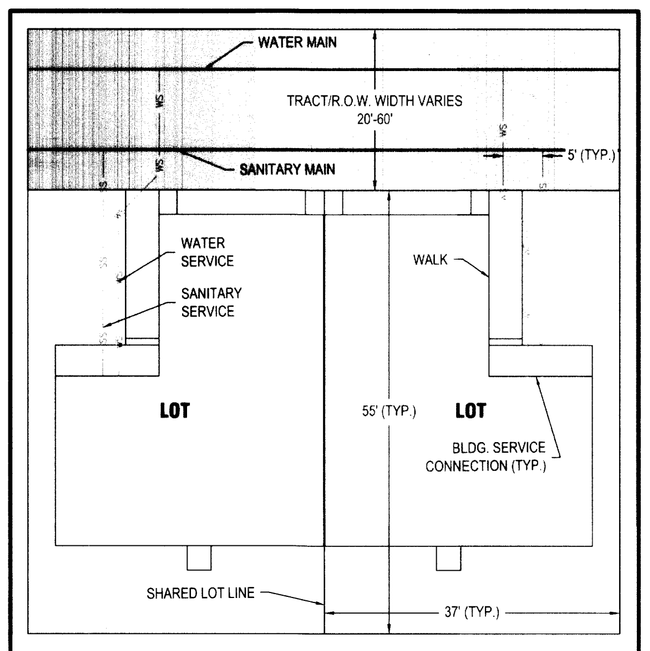

TYPICAL UTILITY SERVICE LAYOUT N.T.S.

60 0 30 60
SCALE
1 inch = 60 ft.

LJA
1765 W. 121st Avenue
Suite 300
Westminster, CO 80234
303-421-4224 • www.lja.com

No.	Rev. Date:	Revision Type:
1		
2		
3		
4		
5		
6		

Designed: WCK
Prepared: WCK
Approved: AKM
Job No.: 8787-0001
Scale Horiz: 1" = 60'
Scale Vert: N/A
Sheet: 15 of 16
Date: September 18, 2026

Proj. Name: Mayberry Phase 2
Location: El Paso County
Plan Set: PUD Development Plan & Preliminary Plan
Sheet Name: Overall Utility Plan

Client: Mayberry Communities, LLC
Address: 22108 Cattlemen Run Calhan, CO 80808
Contact: Scott Souders

811 Know what's below. Call before you dig.

No. 15

S:\LAND\SW WEST-CO\8787 - MAYBERRY\8787-000\ENGINEERING\04 DRAWINGS\PRELIMINARY PLANS\PUD\8787-0001 UTIL PLAN PRINTED ON: 9/21/2026 3:39 PM

226105515
11/13/2026

COLORADO LICENSED
ALEXANDRA KOEBONEE BRUCE
35781
PROFESSIONAL ENGINEER
10/10/2026

HIGHWAY 94

25' EX. TRAIL ESMT.
TO BE VACATED WITH THIS PLAT
REC. NO. 220714655

EX. 7.99'
CRUSHER FINES
TRAIL

MAYBERRY, COLORADO SPRINGS
FILING NO. 1
REC. NO: 220714655

MAYBERRY COMMUNITIES, LLC
3400000456

TRACT B
TRACT A
TRACT C
TRACT E
TRACT A TOWN GREEN POINT
TRACT A
TRACT D

FRONT PORCH VIEW
PASTURE VIEW
SHADE TREE GROVE
NEIGHBORLY POINT
CATTLEMEN VIEW
CATTLEMEN RUN
MAYBERRY DR.
CROSSROADS POINT
MARKETPLACE DR.
GATHERING POINT

MAYBERRY, COLORADO SPRINGS
FILING NO. 1
REC. NO: 220714655

MAYBERRY, COLORADO SPRINGS
FILING NO. 1B
REC. NO: 223715231

ENTRY PARK
MAYBERRY PUD PHASE 2,
TRACT G

99
POOL &
CLUB HOUSE
(DBO)

MAYBERRY
COURTS
MAYBERRY PUD PHASE 2,
TRACT H

MAYBERRY COMMUNITIES, LLC
3400000456

SOCCER FIELD
MAYBERRY PUD PHASE 2,
TRACT F

GRIFFITH SQUARE

PROPOSED STAGE

VILLAGE MAIN ST.

POSITIVE PL.

PROP. RETAINING WALL TYP

PROP. RETAINING WALL TYP
(MAX HEIGHT = 30')

TRENCH DRAIN

5' TYPE R INLET
IN SUMP

LOT LINE
6' U.D.A.E.
6' SETBACK
7.5%
7.5%
0.19' 100-YR WSE
FLOWLINE
2.0% LONG. SLOPE
Q100 = 0.85 CFS

TYP. SIDE LOT SWALE SECTION M-M
N.T.S.

60 0 30 60
SCALE
1 inch = 60 ft.

Know what's below.
Call before you dig.

LJA

1765 W. 121st Avenue
Suite 300
Westminster, CO 80234
303-421-4224 • www.lja.com

No.	Rev. Date:	Revision Type:
1		
2		
3		
4		
5		
6		

Designed: JAV
Prepared: WCK
Approved: AKM
Job No.: 8787-0002
Scale Horiz: 1" = 60'
Scale Vert: N/A
Sheet: 16 of 16
Date: September 18, 2026

Proj. Name: Mayberry Phase 2 PUD, Filing 1
Location: El Paso County
Plan Set: Construction Documents
Sheet Name: Overall Grading Plan

Client: Mayberry Communities, LLC
Address: 22108 Cattlemen Run
Calhan, CO 80808
Contact: Scott Souders

No. 16

S:\LAND\SW\WEST-CO\8787 - MAYBERRY\8787-0001\ENGINEERING\04 DRAWINGS\PRELIMINARY PLANS\PUD\8787-0001 GRADING PLAN PRINTED ON: 9/21/2026 3:39 PM