TIMBERLINE LANDSCAPING, Inc.

PHASE 2 - TEMPORARY OFFICE & WASHBAY

8110 OPPORTUNITY VIEW
COLORADO SPRINGS, COLORADO 80939

TIMBERLINE LANDSCAPING, Inc.
PHASE 2 - TEMPORARY OFFICE & WASHBAY
8110 OPPORTUNITY VIEW
COLORADO SPRINGS, COLORADO 80939

OWNER

OWNER INFORMATION:
TIMBERLINE LANDSCAPING, INC.
2480 N. POWERS BLVD
COLORADO SPRINGS, CO 80915
PH: 719.638.1000
CONTACT: TIMOTHY & MINDY EMICK

PROJECT TEAM

ARCHITECT:
SK2 ARCHITECTURE
1525 MARKET STREET, SUITE 200
DENVER, CO 80202
P: 303.534.4480
CONTACT: GENEVA KOWALSKI

CIVIL ENGINEER:
M&S CIVIL CONSULTANTS, INC.
20 BOULDER CRESCENT, SUITE 110
COLORADO SPRINGS, CO 80903
PH: 719.955.5485
CONTACT: GEORGIANNE WILLARD

MP & STRUCTURAL ENGINEER:
VERADYN
5680 PECOS STREET
DENVER, CO 80221
PH: 720.612.7553
CONTACT: DUSTIN RANDLE

METAL BUILDING STRUCTURAL ENGINEER:
VARCO PRUDEN
3200 PLAYERS CLUB CIRCLE
MEMPHIS, TN 38125
PH: 319.429.2939
CONTACT: ALAN JOHNSON

ELECTRICAL ENGINEER:
EG POWER ENGINEERING
1701 WASHINGTON AVENUE
GOLDEN, CO 80401
PH: 720.533.4850
CONTACT: CLINT MCMULLEN

VICINITY MAP

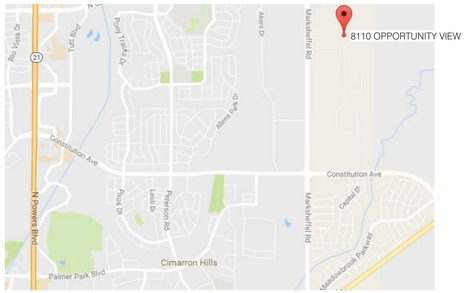

PROJECT DESCRIPTION

NEW COMMERCIAL 2,019 SF METAL BUILDING & 4,980 SF PREFABRICATED TEMPORARY BUILDING ON 11.48 ACRE SITE. THE METAL BUILDING TO BE A VEHICLE WASHBAY & PREFABRICATED BUILDING TO BE TEMPORARY OFFICE SPACE FOR TIMBERLINE LANDSCAPE INC.

ZONING CODE INFORMATION

EXISTING ZONING: (M) INDUSTRIAL

PARKING RE: CIVIL PLANS

BUILDING AREA

TEMP OFFICE	4,980 SF
WASHBAY	2,019 SF
BUILDINGS TOTAL: 2	6,999 SF

OCCUPANT LOAD CALCULATION

	OCCUPANCY TYPE	GROSS AREA	FUNCTION OF SPACE	LOAD FACTOR	TOTAL OCCUPANTS
WASHBAY	S-1	1,797 SF	WAREHOUSE	500	4
		1,797 SF			4

	OCCUPANCY TYPE	GROSS AREA	FUNCTION OF SPACE	LOAD FACTOR	TOTAL OCCUPANTS
OFFICE	B	4,544 SF	BUSINESS AREA	100	46
		4,544 SF			46

PLUMBING REQUIREMENTS

	OCCUPANT LOAD	WATER CLOSETS		LAVATORIES		SHOWER	DRINKING FOUNTAIN	SERVICE SINK
		MEN	WOMEN	MEN	WOMEN			
B (TEMP OFFICE)	46 (23 / SEX)	.92	.92	.575	.575	-	.5	1
TOTAL REQUIRED		1	1	1	1	-	1	1
TOTAL PROVIDED		1	1	1	1	-	1	1

	OCCUPANT LOAD	WATER CLOSETS		LAVATORIES		SHOWER	DRINKING FOUNTAIN	SERVICE SINK
		MEN	WOMEN	MEN	WOMEN			
S-1 (WASHBAY)	4 (2 / SEX)	.4	.4	.18	.18	-	.09	1
TOTAL REQUIRED		1	1	1	1	-	1	1
TOTAL PROVIDED		1 UNISEX**		1 UNISEX**		-	0***	1

*PER IBC 2009 SECTION 2902.3.2 - ADDITIONAL FACILITES ARE PROVIDED IN THE PHASE ONE OFFICE BUILDING LOCATED TO THE SOUTH WITHIN 500 FT OF THIS BUILDING.

**PER IBC 2009 SECTION 2902.2 - EXCEPTION 2 SEPARATE FACILITES SHALL NOT BE REQUIRED IN STRUCTURES OR TENANT SPACES WITH TOATL OCCUPANT LOAD, INCLDING BOTH EMPLOYEES AND CUSTOMERS, OF 15 OR LESS

***PER IBE TABLE 2902.1 FOOT NOTE F - DRINKING FOUNTAINS ARE NOT REQUIRED FOR AN OCCUPANT LOAD OF 15 OR FEWER

BUILDING CODE STUDY

GOVERNING AUTHORITY: PIKES PEAK REGIONAL BUILDING DEPARTMENT

REFERENCE CODE:

2011 PIKES PEAK REGIONAL BUILDING CODE (PPRBC)
2009 INTERNATIONAL BUILDING CODE (IBC)
2009 INTERNATIONAL EXISTING BUILDING CODE (IEBC)
2009 INTERNATIONAL ENERGY CONSERVATION CODE (IECC)
2009 INTERNATIONAL MECHANICAL CODE (IMC)
2009 INTERNATIONAL FUEL GAS CODE (IFGC)
2015 INTERNATIONAL PLUMBING CODE (IPC)
2014 NATIONAL ELECTRICAL CODE (NEC)
2003 ICC/ANSI A117.1 ACCESSIBILITY STANDARD

TYPE OF CONSTRUCTION: V-B, NOT SPRINKLERED

OCCUPANCY CLASSIFICATION: WASHBAY: S-1 TEMPORARY OFFICE: B

REQUIRED SEPARATION OF OCCUPANCIES:
(TABLE 508.4)
B, F-1, S-1: NO SEPARATION REQUIREMENT

FIRE RESISTANCE RATING REQUIREMENTS:
(TABLE 601)BUILDING ELEMENTS-TYPE V-B CONSTRUCTION (FOR WASHBAY)

PRIMARY STRUCTURAL FRAME	0
BEARING WALLS	
EXTERIOR	0
INTERIOR	0
NONBEARING WALLS & PARTITIONS	
INTERIOR	0
FLOOR CONSTRUCTION & SECONDARY MEMBERS	0
ROOF CONSTRUCTION & SECONDARY MEMBERS	0

(TABLE 602) NONBEARING WALL AND PARTITIONS

EXTERIOR	
X < 5	F-1, S-1= 2, B= 1
5< X < 10	1
10 < X < 30	0
X > 30	0

AREA AND HEIGHT LIMITATIONS:
WASH BAY: S-1

	ALLOWED	ACTUAL
AREA PER FLOOR:	17,500 SF	2,019 SF
BUILDING HEIGHT:	55'	20' +/-
# STORIES:	2	1

EGRESS REQUIREMENTS:
(IBC 1005)

	REQUIRED	ACTUAL
WASHBAY	4 OCC x .2" = 0.8"	72"
TEMPORARY OFFICE	46 OCC x .2" = 9.2"	108"

DRAWING INDEX

ISSUE DATE	02/05/2018
PROJECT NUMBER	2017.077

NO.	REVISION / SUBMISSIONS	DATE
	50% Construction Documents	01/26/2018
	100% Construction Documents	02/05/2018

STATE OF COLORADO
GENEVA MARIE KOWALSKI
ARC-00402906
2/5/2018
LICENSED ARCHITECT

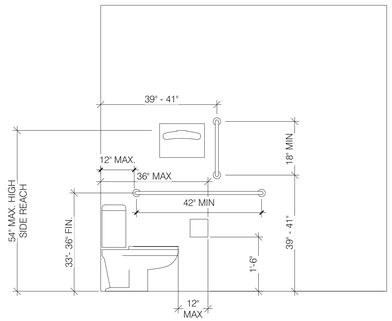

ADA SANITARY FACILITIES
ELEVATIONS

SCALE
1/2" = 1' - 0"

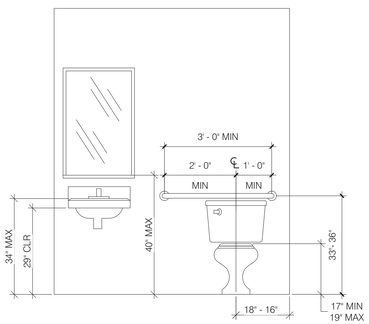

ADA SANITARY FACILITIES
ELEVATIONS

SCALE
1/2" = 1' - 0"

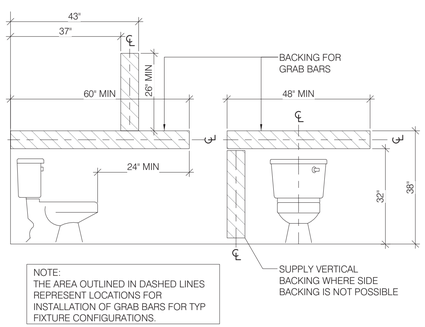

NOTE:
THE AREA OUTLINED IN DASHED LINES REPRESENT LOCATIONS FOR INSTALLATION OF GRAB BARS FOR TYP FIXTURE CONFIGURATIONS.

ADA SANITARY FACILITIES
GRAB BAR MOUNTING PLATES

SCALE
1/2" = 1' - 0"

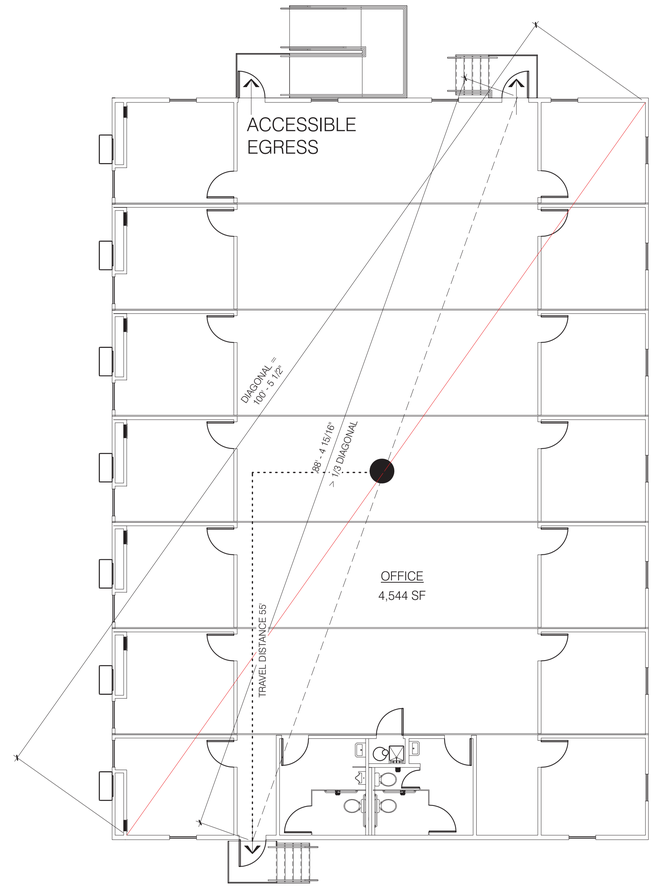

2 TEMP OFFICE
1/8" = 1'-0"

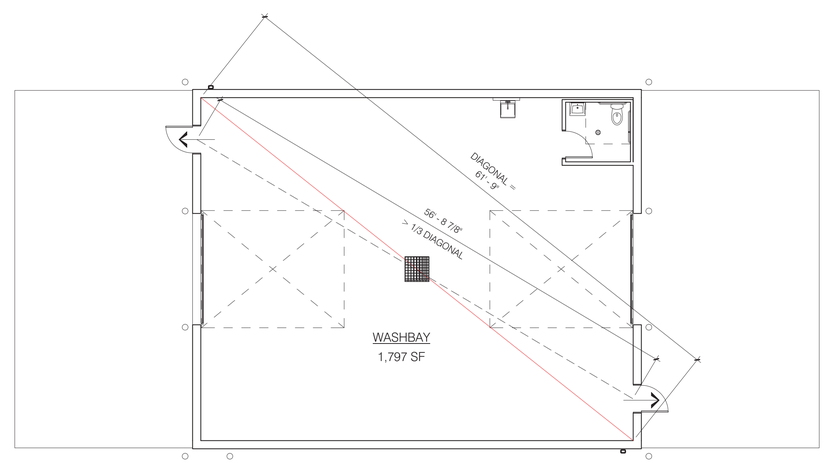

1 WASHBAY
1/8" = 1'-0"

CODE PLAN LEGEND

TRAVEL DISTANCE
COMMON PATH

MAXIMUM TRAVEL DISTANCE TO EXIT (B): 200'

NUMBER OF EXITS REQUIRED (B): 1*
NUMBER OF EXITS PROVIDED (B): 1 ACCESSIBLE (3 TOTAL)

*PER IBC 2009 TABLE 1015.1 - SPACES WITH ONE EXIT OCCUPANCY TYPE B W/ MAX OCCUPANT LOAD OF 49

MAXIMUM TRAVEL DISTANCE TO EXIT (S-1): 200'

MAXIMUM COMMON PATH OF TRAVEL: 100'

NUMBER OF EXITS REQUIRED (S-1): 2
NUMBER OF EXITS PROVIDED (S-1): 2

SK2 ARCHITECTURE
1525 Market St., Suite 200
Denver, CO 80202
p: 303.534.4480

STATE OF COLORADO
GENEVA MARIE KOWALSKI
ARC-00402908
2/5/2018
LICENSED ARCHITECT

TIMBERLINE LANDSCAPING, Inc.
NEW CONSTRUCTION
8110 OPPORTUNITY VIEW
COLORADO SPRINGS, COLORADO 80939

NO.	REVISION / SUBMISSIONS	DATE
	50% Construction Documents	01/26/2018
	100% Construction Documents	02/05/2018

PROJECT NUMBER	DATE
2017.077	02/05/2018

LIFE SAFETY PLANS & ADA REQUIREMENTS

DRAWING NUMBER
G001

SITE PLAN GENERAL NOTES

1. DO NOT SCALE DRAWINGS: WRITTEN DIMENSIONS GOVERN.
2. RE: LANDSCAPE DRAWINGS AND CIVIL DRAWINGS FOR FINAL GRADING AND PLANTING, INCLUDING CONCRETE SIDEWALKS, LOADING DOCK, CURB AND RIGHT OF WAY

SITE PLAN LEGEND

CONCRETE

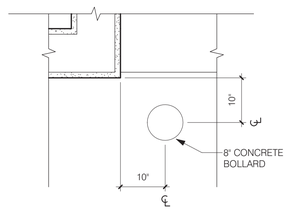

4 TYP. BOLLARD DETAIL @ BUILDING CORNERS
3/4" = 1'-0"

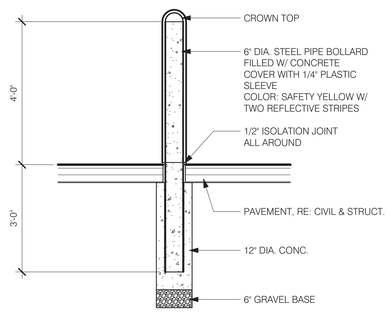

3 TYP. BOLLARD DETAIL
1/2" = 1'-0"

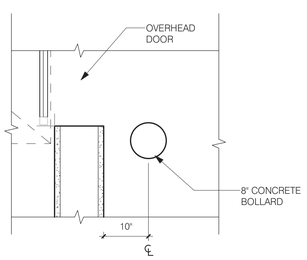

5 TYP. BOLLARD DETAIL @ OVERHEAD DOORS
3/4" = 1'-0"

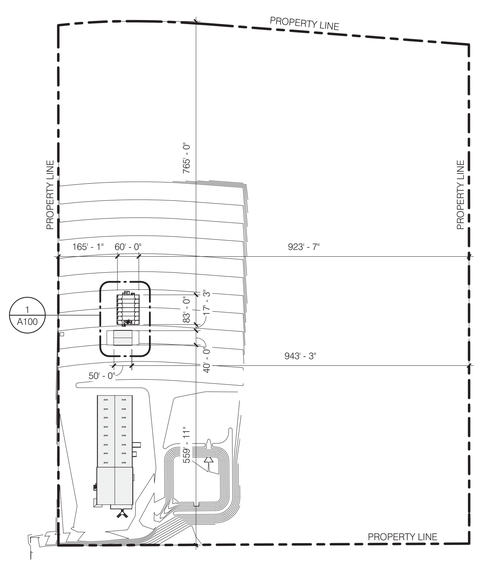

2 SITE PLAN - DISTANCE TO PROPERTY LINE
1" = 200'-0"

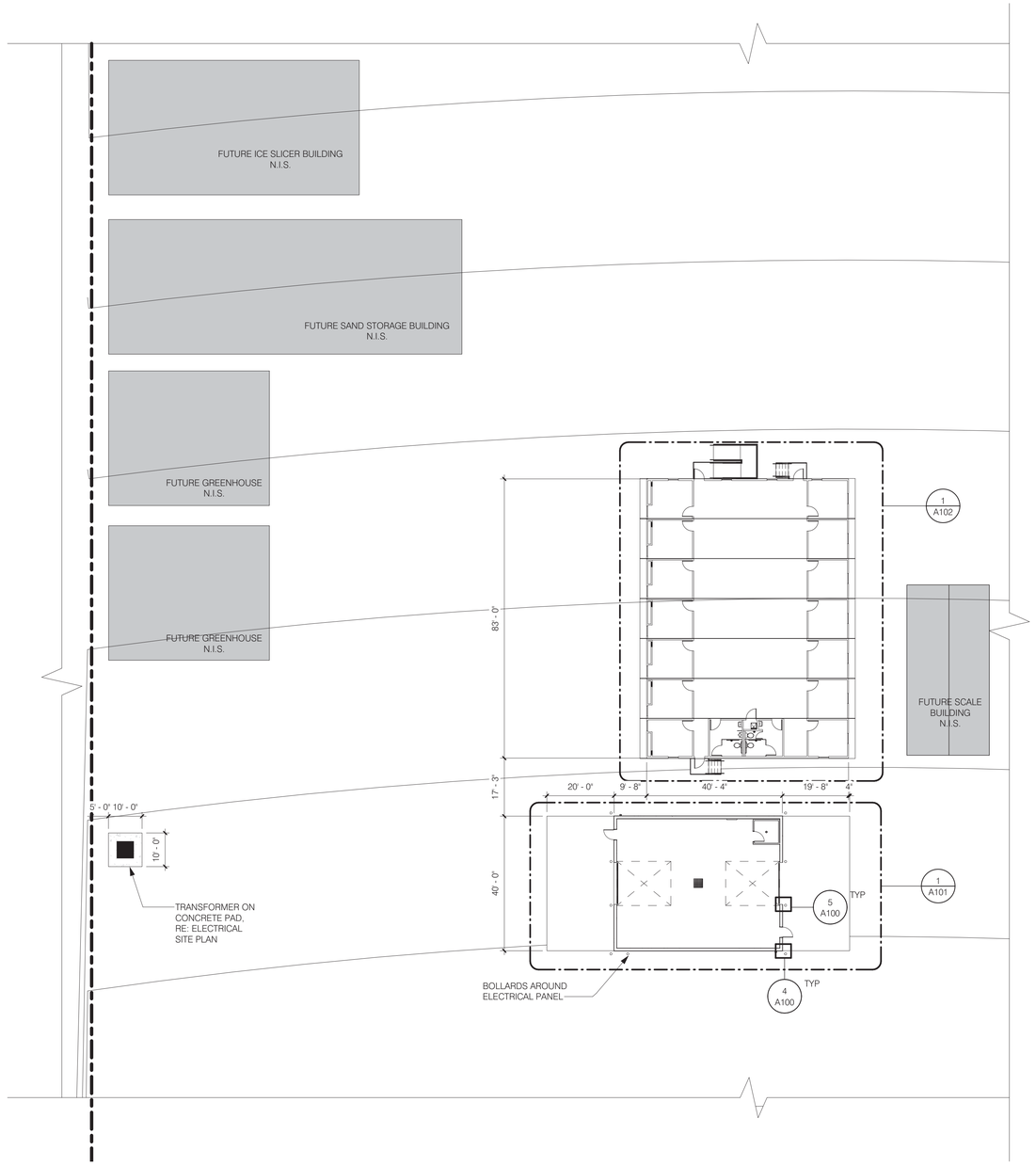

1 SITE PLAN
1" = 20'-0"

SK2 ARCHITECTURE
1525 Market St., Suite 200
Denver, CO 80202
p: 303.534.4480

STATE OF COLORADO
GENEVA MARIE KOWALSKI
ARC-00402306
2/5/2018
LICENSED ARCHITECT

TIMBERLINE LANDSCAPING, Inc.

NEW CONSTRUCTION

8110 OPPORTUNITY VIEW
COLORADO SPRINGS, COLORADO 80939

NO.	REVISION / SUBMISSIONS	DATE
	50% Construction Documents	01/26/2018
	100% Construction Documents	02/05/2018

PROJECT NUMBER	DATE
2017.077	02/05/2018

SITE PLAN

DRAWING NUMBER

A100

WASHBAY DOOR SCHEDULE

NO.	ROOM NAME	FRAME TYPE	DOOR TYPE	DOOR SIZE WIDTH	DOOR SIZE HEIGHT	DOOR SIZE THICKNESS	HARDWARE SET	REMARKS
WB101	WASHBAY	F1	D1	3' - 0"	7' - 0"	1 3/4"	1	
WB102	WASHBAY	F1	D1	3' - 0"	7' - 0"	1 3/4"	1	
WB103	UNISEX RESTROOM	F2	D3	3' - 0"	6' - 8"	1 3/4"	3	
WB104		N/A	D2	12' - 0"	14' - 0"		2	
WB105		N/A	D2	12' - 0"	14' - 0"		2	

HARDWARE SETS

SET 1 - EXTERIOR DOORS

- PANIC HARDWARE
- ADDITIONAL HARDWARE TBD BY OWNER

SET 2 - OVERHEAD DOORS

- HARDWARE TBD BY OWNER

SET 3 - RESTROOM DOORS

- HARDWARE TBD BY OWNER

LIGHTING LEGEND

SYMBOL	FIXTURE DESCRIPTION	MODEL	MANUFACTURER	NOTES
	1x4' LED SURFACE MOUNTED		LITHONIA LIGHTING	
	LED HIGH BAY	IBG 4FT 24000LM SEF GND ACL 40K 80CRI	LITHONIA LIGHTING	IBG 4ft 24000LM SEF GND ACL 40K 80CRI WATERPROOF
	LED WALL	TWH LED 40K	LITHONIA LIGHTING	CENTERED OVER OVERHEAD DOOR, RE: ELEVATIONS
	HIGH VOLUME LOW SPEED FAN	POWERFOIL X 3.0 12'	BIG ASS FANS	

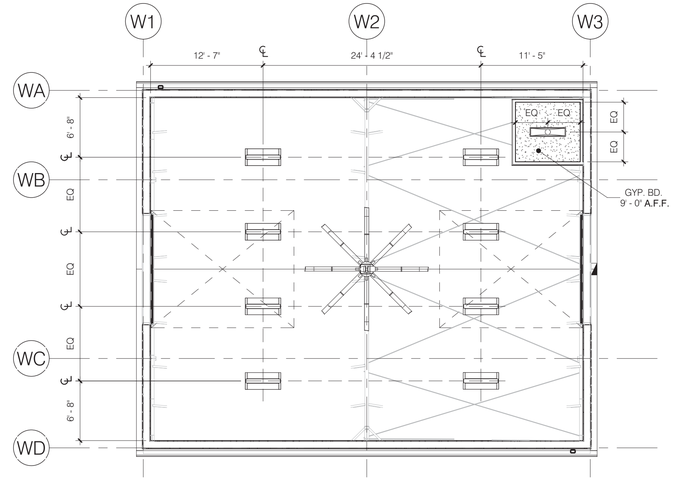

3 WASHBAY - REFLECTED CEILING PLAN
1/8" = 1'-0"

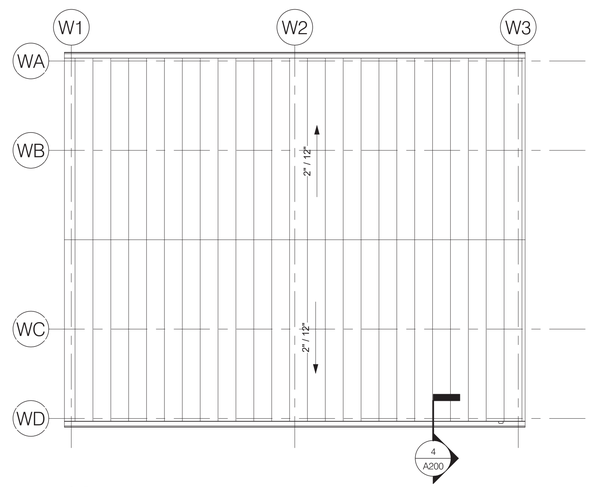

2 WASHBAY - ROOF PLAN
1/8" = 1'-0"

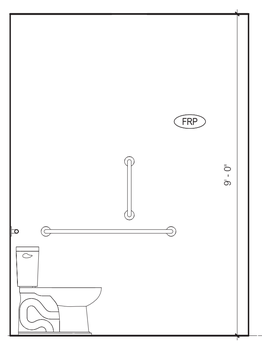

NOTE: RE: G001 FOR ACCESSIBLE REQUIREMENTS

6 UNISEX RESTROOM INTERIOR ELECATION - WEST
1/2" = 1'-0"

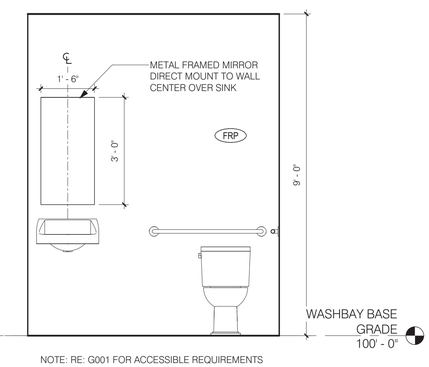

NOTE: RE: G001 FOR ACCESSIBLE REQUIREMENTS

5 UNISEX RESTROOM INTERIOR ELEVATION - NORTH
1/2" = 1'-0"

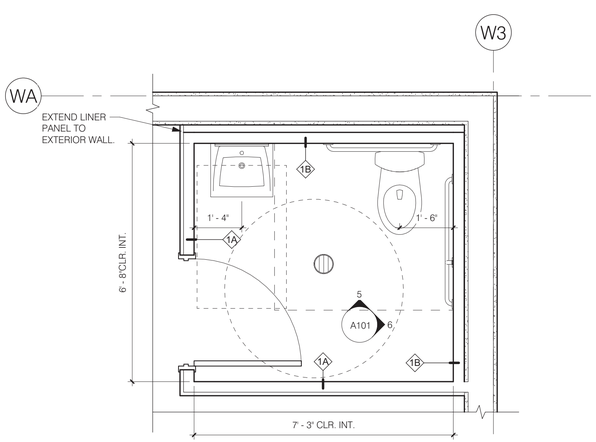

4 WASH BAY - ENLARGED RESTROOM PLAN
1/2" = 1'-0"

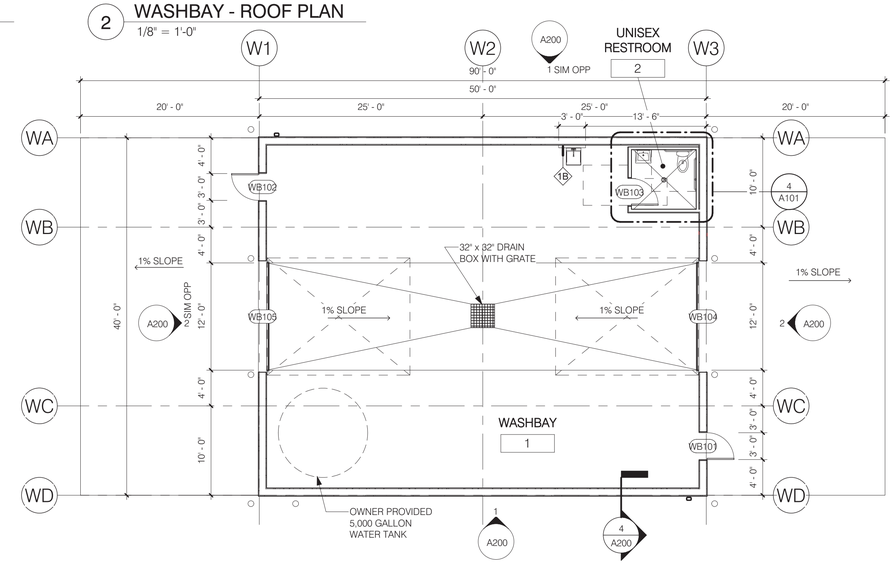

1 WASHBAY - FLOOR PLAN
1/8" = 1'-0"

PLAN GENERAL NOTES

1. DO NOT SCALE DRAWINGS: WRITTEN DIMENSIONS GOVERN.
2. ALL DOORS TO BE 4" FROM INSIDE CORNER TO FRAME U.O.N.
3. ALL INTERIOR PARTITION DIMENSIONS ARE TO EDGE OF STUD TO EDGE OF STUD, U.O.N..
4. DIMENSIONS OF PLUMBING FIXTURES ARE FROM CENTERLINE OF FIXTURE TO INTERIOR FACE OF FINISH.
5. ELEVATIONS SHOWN ON THESE DRAWINGS RELATE TO FINISH FLOOR ELEVATION =100'-0 FOR EACH BUILDING, COORDINATE WITH CIVIL
6. ALL WORK SHALL BE ERECTED AND INSTALLED PLUMB, LEVEL, SQUARE & TRUE, AND IN PROPER ALIGNMENT IN ACCORDANCE WITH ACCEPTED INDUSTRY STANDARDS.

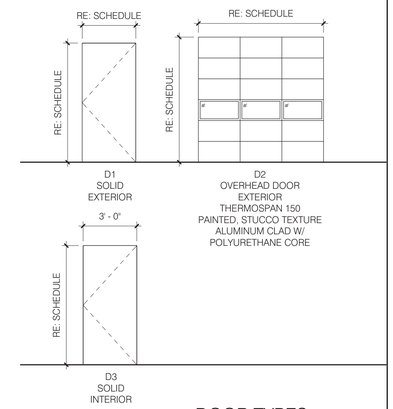

DOOR TYPES
1/4" = 1'-0"

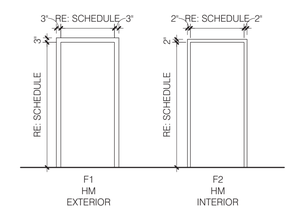

FRAME TYPES
1/4" = 1'-0"

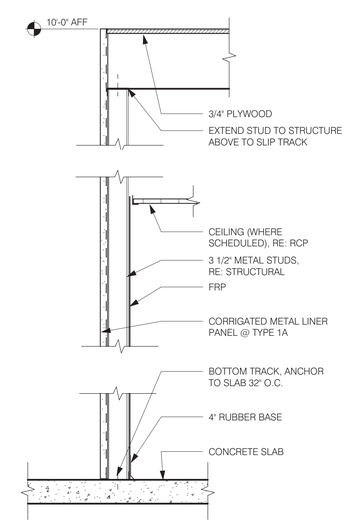

1A 3 1/2" METAL STUD PARTITION W/ CORRUGATED METAL LINER PANEL 0 HOUR RATING

1B 3 1/2" METAL STUD PARTITION 0 HOUR RATING

PARTITION TYPES
1" = 1'-0"

SK2 ARCHITECTURE
1525 Market St., Suite 200
Denver, CO 80202
p: 303.534.4480

STATE OF COLORADO
GENEVA MARIE KOWALSKI
ARC-00402906
2/5/2018
LICENSED ARCHITECT

TIMBERLINE LANDSCAPING, Inc.
NEW CONSTRUCTION
8110 OPPORTUNITY VIEW
COLORADO SPRINGS, COLORADO 80939

NO.	REVISION / SUBMISSIONS	DATE
	50% Construction Documents	01/26/2018
	100% Construction Documents	02/05/2018

PROJECT NUMBER	DATE
2017.077	02/05/2018

WASHBAY

DRAWING NUMBER

A101

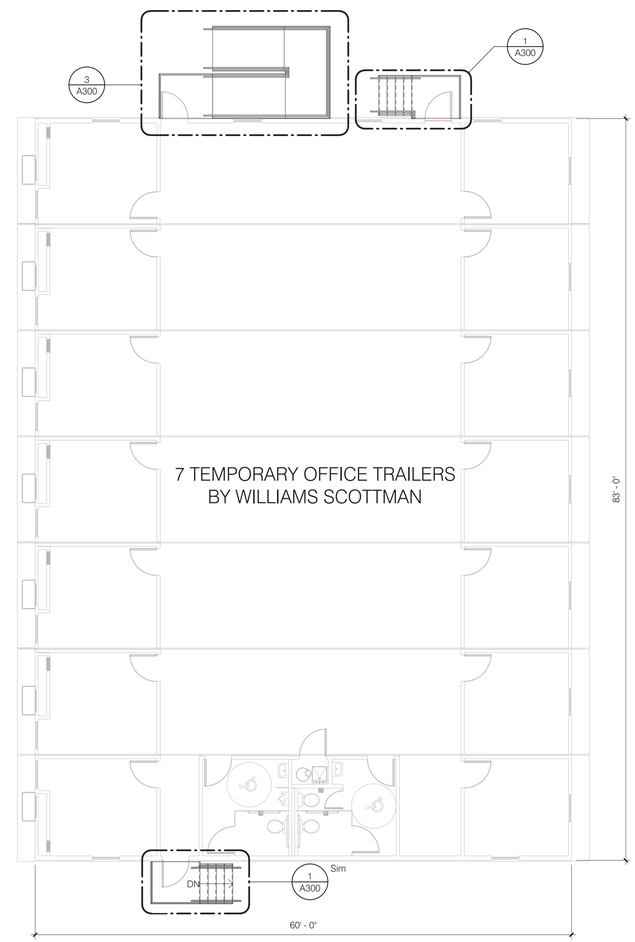

1 TEMP OFFICE
1/8" = 1'-0"

SK2 ARCHITECTURE
1525 Market St., Suite 200
Denver, CO 80202
p: 303.534.4480

STATE OF COLORADO
GENEVA MARIE KOWALSKI
ARC-00402906
2/5/2018
LICENSED ARCHITECT

TIMBERLINE LANDSCAPING, Inc.

NEW CONSTRUCTION

8110 OPPORTUNITY VIEW
COLORADO SPRINGS, COLORADO 80939

NO.	REVISION / SUBMISSIONS	DATE
	50% Construction Documents	01/26/2018
	100% Construction Documents	02/05/2018

PROJECT NUMBER	DATE
2017.077	02/05/2018

TEMP OFFICE - FOR REFERANCE ONLY

DRAWING NUMBER

A102

EXTERIOR FINISH SCHEDULE				
TYPE	MANUFACTURER	STYLE	COLOR	NOTES
MP-1	VARCO PRUDEN	CORRUGATED	COOL GRANITE GREY	24 GUAGE METAL PANEL, INSTALLED BY VP
TRIM		METAL TRIM	COOL GRANITE GREY	

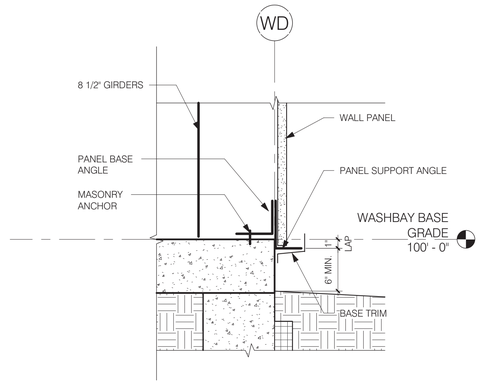

5 DETAIL SECTION - METAL PANEL BASE
1 1/2" = 1'-0"

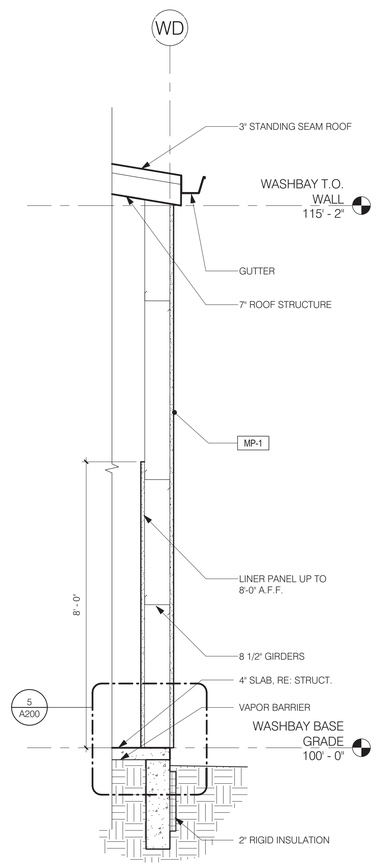

4 WASHBAY WALL SECTION
1/2" = 1'-0"

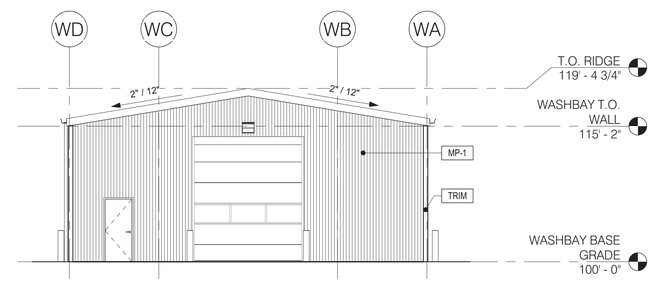

2 WASHBAY - EAST
1/8" = 1'-0"

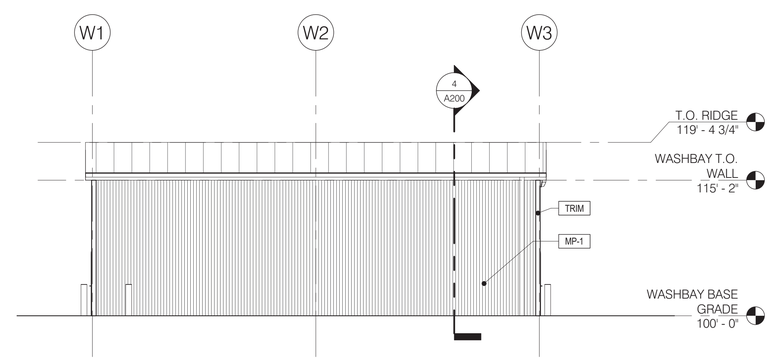

1 WASHBAY - SOUTH
1/8" = 1'-0"

SK2 ARCHITECTURE
1525 Market St., Suite 200
Denver, CO 80202
p: 303.534.4480

STATE OF COLORADO
GENEVA MARIE KOWALSKI
ARC-00402906
2/5/2018
LICENSED ARCHITECT

TIMBERLINE LANDSCAPING, Inc.

NEW CONSTRUCTION

8110 OPPORTUNITY VIEW
COLORADO SPRINGS, COLORADO 80939

NO.	REVISION / SUBMISSIONS	DATE
	50% Construction Documents	01/26/2018
	100% Construction Documents	02/05/2018

PROJECT NUMBER	DATE
2017.077	02/05/2018

WASHBAY ELEVATIONS

DRAWING NUMBER

A200

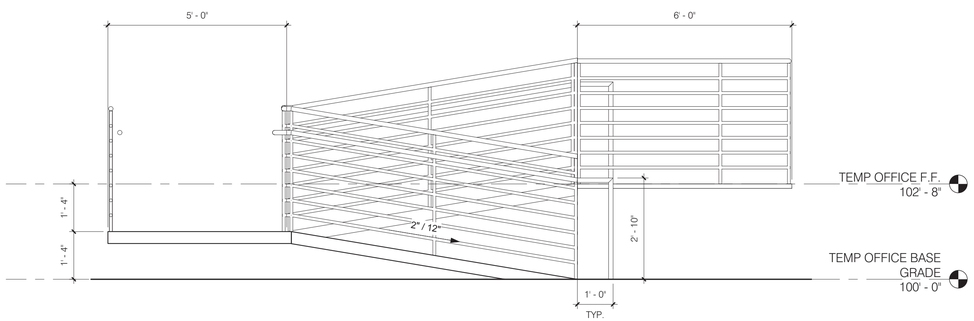

4 RAMP SECTION
1/2" = 1'-0"

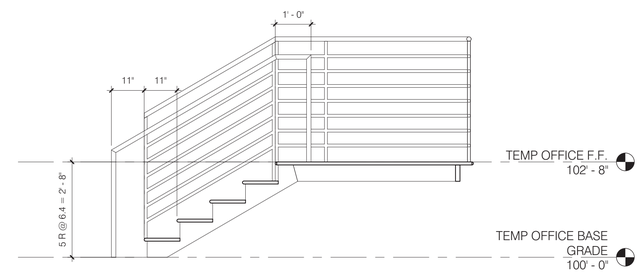

2 STAIR SECTION
1/2" = 1'-0"

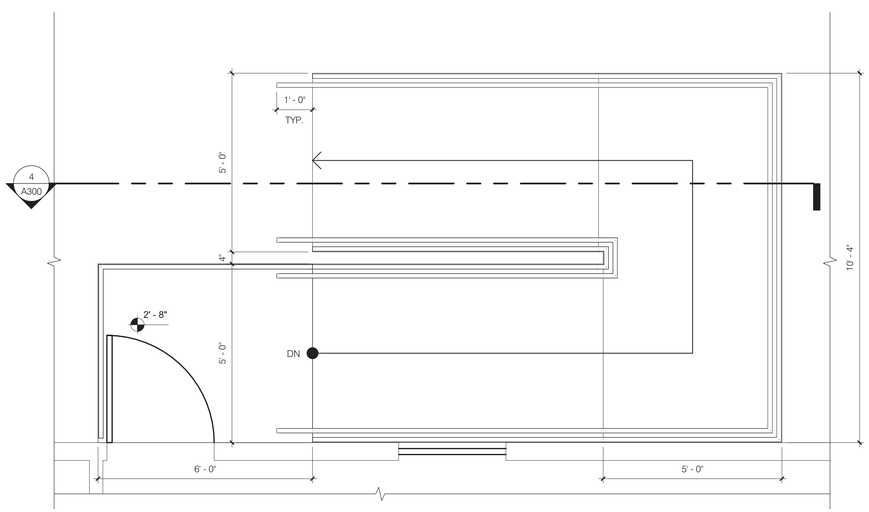

3 ENLARGED RAMP PLAN
1/2" = 1'-0"

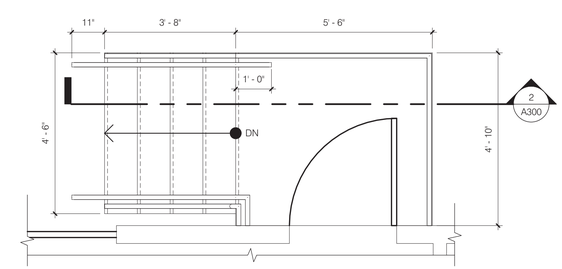

1 ENLARGED STAIR PLAN
1/2" = 1'-0"

SK2 ARCHITECTURE
1525 Market St., Suite 200
Denver, CO 80202
p: 303.534.4480

STATE OF COLORADO
GENEVA MARIE KOWALSKI
ARC-00402906
2/5/2018
LICENSED ARCHITECT

TIMBERLINE LANDSCAPING, Inc.
NEW CONSTRUCTION
8110 OPPORTUNITY VIEW
COLORADO SPRINGS, COLORADO 80939

NO.	REVISION / SUBMISSIONS	DATE
	100% Construction Documents	02/05/2018

PROJECT NUMBER	DATE
2017.077	02/05/2018

ENLARGED STAIR & RAMP PLANS & SECTIONS

DRAWING NUMBER
A300

BUILDING OUTLINE MECHANICAL SPECIFICATIONS

1. BASE BUILDING SPECIFICATIONS, DRAWINGS AND LATEST REVISIONS ON CONTRACT DOCUMENTS FOR MECHANICAL WORK SHALL APPLY TO THESE DRAWINGS.

2. ALL WORK SHALL BE DONE IN COMPLIANCE WITH THE TENANT FINISH SPECIFICATIONS (AVAILABLE IN MANAGEMENT OFFICE), DRAWINGS, AND LATEST REVISIONS ON CONTRACT DOCUMENTS FOR MECHANICAL WORK. PROJECT SHALL BE COORDINATED WITH THE EXISTING BUILDING SERVICES AND SHALL INCLUDE ALL ITEMS NECESSARY FOR COMPLETE AND FULLY OPERATIONAL TENANT MECHANICAL SYSTEMS. MAKE CONNECTIONS TO AND EXTEND SYSTEMS INSTALLED BY OTHERS AND/OR FURNISHED BY OTHER. PROVIDE ACCESSORIES AND INCIDENTAL ITEMS AS REQUIRED FOR A COMPLETE AND FULLY OPERATIONAL SYSTEM WHETHER OR NOT SPECIFICALLY SPECIFIED AND/OR SHOWN OR THE PLANS.

3. ELECTRICAL COORDINATION; CONFIRM VOLTAGE, PHASE, AND AMPACITY WITH ELECTRICAL CONTRACTOR PRIOR TO ORDERING EQUIPMENT. ALL 24 VOLT CONTROLS INCLUDING INTERLOCK WIRING FOR MECHANICAL EQUIPMENT BY DIVISION 15 CONTRACTOR. PROVIDE MAGNETIC STARTERS FOR ALL 3-PHASE MOTORS WITH PROTECTION ON ALL THREE LEADS. CONTROL AND HEATING/COOLING EQUIPMENT TO AUTOMATICALLY RESTART AFTER POWER FAILURE. ALL WIRE TO BE INSTALLED IN CONDUIT PER NEC LATEST EDITION.

4. EXTRA COSTS OR CHANGES ALLOWED ONLY IF APPROVED IN WRITING TO THE ENGINEER WITH DOLLAR AMOUNT PRIOR TO ORDERING.

5. LOCAL AND STATE CODES AND ORDINANCES SHALL BE FOLLOWED.

6. LATEST VERSION OF THE ENERGY CODE SHALL BE FOLLOWED, ALL EQUIPMENT, INSULATION, AND CONTROLS SHALL CONFORM.

7. SUBSTITUTIONS WILL BE PROCESSED AND MUST BE SUBMITTED WITH SUBSTITUTED CUT SHEETS.

8. ALL WORK SHALL COMPLY WITH ALL APPLICABLE CODES AND REGULATIONS.

9. THERMOSTATS TO BE PROVIDED WITH 7 DIFFERENT DAILY PROGRAMMABLE SCHEDULE, CAPABLE OF BEING PROGRAMMED ON A 7-DAY CYCLE WITH A SEPARATE WEEK-END SETTING, NIGHT SETBACK, TEMPERATURE HOLD SETTINGS, CAPABLE OF 2-HOUR OCCUPANT OVERRIDE, 10-HOUR BACKUP, AND 5 DEGREE F DEADBAND. THERMOSTATIC SET BACK CONTROLS SHALL HAVE THE CAPABILITY TO SET BACK OR TEMPORARILY OPERATE THE SYSTEM TO MAINTAIN ZONE TEMPERATURES DOWN TO 85°F.

10. CONTRACTOR TO PROVIDE AN INITIAL SITE VISIT TO VERIFY EXISTING CONDITIONS. CONTRACTOR SHALL BE HELD RESPONSIBLE FOR VERIFICATION OF EXISTING JOB CONDITIONS PRIOR TO BID. NO ADDITIONAL COSTS SHALL BE AWARDED TO THE SUCCESSFUL CONTRACTOR OR HIS SUBCONTRACTORS, AFTER BIDS HAVE BEEN SUBMITTED AND CONTRACTS AWARDED, FOR FAILURE TO VERIFY EXISTING JOB CONDITIONS. DISCREPANCIES BETWEEN ACTUAL FIELD CONDITIONS AND CONTRACT DOCUMENTS SHALL BE BROUGHT TO THE ATTENTION OF THE ENGINEER FOR ALTERNATIVE METHODS OF INSTALLATION THREE (3) DAYS MINIMUM PRIOR TO BIDDING THIS JOB.

11. DRAWINGS ARE SCHEMATIC IN NATURE AND ARE NOT TO BE SCALED FOR ROUGH-IN MEASUREMENTS OR USED AS SHOP DRAWINGS. WHERE DRAWINGS ARE REQUIRED FOR THESE PURPOSES OR MUST BE MADE FROM FIELD MEASUREMENTS, CONTRACTOR SHALL TAKE THE NECESSARY MEASUREMENTS AND PREPARE THE REQUIRED DRAWINGS.

12. COORDINATE WITH ALL OTHER TRADES FOR INSTALLATION WITH IN THE AVAILABLE SPACE. WHERE CROWDED CONDITIONS EXISTING PREPARE COORDINATION DRAWINGS SHOWING ALL TRADE CONFLICTS AND SUBMIT TO THE ARCHITECT FOR APPROVAL AND DIRECTION PRIOR TO ROUGH-IN OR INSTALLATION. RELOCATION OF INLETS, OUTLETS, AND/OR APPARATUS MADE PRIOR TO ROUGH-IN OR REQUIRED BY FIELD CONDITIONS FOR COORDINATION SHALL BE DONE AT NOT ADDITIONAL COST TO THE OWNER OR HIS AGENTS.

13. THE MECHANICAL DRAWINGS ARE DIAGRAMMATIC IN CHARACTER AND DO NOT NECESSARILY INDICATE EVERY REQUIRED OFFSET, VALVE, FITTING, ETC. FIELD VERIFY ALL MEASUREMENTS PRIOR TO ORDERING ANY EQUIPMENT, DUCTWORK, PIPING, ETC.

14. ALL BIDS SHALL INCLUDE ALL COSTS ASSOCIATED WITH THE PURCHASE AND DELIVERY OF NEW EQUIPMENT TO THE JOB SITE IN TIME TO MEET ALL DEADLINES. REPORT, PRIOR TO BID, ANY DELIVERY PROBLEMS WHICH MIGHT PREVENT TIMELY COMPLETION OF THIS PROJECT.

15. CONTRACTOR SHALL BE HELD RESPONSIBLE FOR OBTAINING BUILDING DEPARTMENT PERMIT FOR HIS PORTION OF WORK PRIOR TO THE START OF CONSTRUCTION.

16. SUBMIT CUTS AND BROCHURES ON ANY EQUIPMENT FURNISHED UNDER THIS CONTRACT FOR ENGINEER'S REVIEW. PROVIDE TO THE ENGINEER A MINIMUM OF FOUR (4) HARD COPIES OF THE MECHANICAL SUBMITTALS FOR REVIEW, PRIOR TO ORDERING ANY EQUIPMENT. (EMAIL AND FACSIMILES OF SUBMITTALS WILL NOT BE ACCEPTED.)

17. CONTRACTOR SHALL COORDINATE ALL WORK WITH OTHER TRADES AND STRUCTURE AND SHALL SUBMIT 1/4" SCALE COORDINATION/SHOP DRAWINGS SHOWING ALL DUCTWORK, PIPING, PLUMBING, ETC.

18. MECHANICAL AND PLUMBING CONTRACTORS SHALL FIELD INSPECT ALL EXISTING EQUIPMENT/DEVICES TO ENSURE PROPER FUNCTIONALITY. ANY EQUIPMENT OR DEVICES NOT FUNCTIONING PROPERLY ARE TO BE DOCUMENTED AND BROUGHT TO THE ATTENTION OF THE ENGINEER IMMEDIATELY.

19. FIELD ROUTE ALL DUCTWORK AND PIPING, AS REQUIRED, TO AVOID CONFLICTS WITH EXISTING STRUCTURE, DUCTWORK, PIPING, ELECTRICAL CONDUITS, LIGHTS, ETC. RELOCATE ANY ITEMS AS REQUIRED TO ACCOMMODATE INSTALLATION OF NEW DUCTWORK, PIPING AND EQUIPMENT WHILE MAINTAINING ORIGINAL INTEGRITY OF ALL SYSTEMS. RUN ALL DUCTWORK AND PIPING AS HIGH AS POSSIBLE AND SUSPEND FROM STRUCTURE ABOVE.

20. ALL CURBS, SUPPORTS, AND ANCHORS SHALL BE PROVIDED FOR MECHANICAL WORK. NO CHAIN, TAPE, OR WIRE IS ALLOWED.

21. ALL EXISTING DUCTWORK, DIFFUSERS, GRILLES, THERMOSTATS, ETC., IN GOOD CONDITION SHALL BE RE-USED AFTER BEING THOROUGHLY CLEANED AND/OR REFINISHED TO MATCH NEW, UNLESS OTHERWISE NOTED ON DRAWINGS. ANY EQUIPMENT IN DETERIORATED CONDITION SHALL BE REPLACED WITH NEW EQUIPMENT. ENSURE ALL EXISTING EQUIPMENT MEETS THE CURRENT CODE.

22. ANY EXISTING EQUIPMENT, DUCTWORK, PIPING, PLUMBING, CONTROLS, ETC. NOT USED SHALL BE REMOVED AND DISCARDED PER OWNERS REQUEST. PROPERLY CAP AND SEAL ALL DUCTWORK AND PIPING TAPS NOT USED.

23. BASE BUILDING MECHANICAL EQUIPMENT THAT IS SCHEDULED ON THIS SET OF PLANS AND SHOWN ON THE MECHANICAL FLOOR PLAN(S) AND BASE BUILDING MECHANICAL SYSTEMS SHOWN OUTSIDE THE PROJECT AREA ARE EXISTING AND ARE SHOWN FOR REFERENCE PURPOSES ONLY.

24. ANY CONFLICTS DISCOVERED AFTER WORK HAS STARTED, NOT PREVIOUSLY BEING APPARENT AND NECESSITATING REVISIONS TO CONTRACT DOCUMENTS, SHALL BE BROUGHT TO THE ATTENTION OF THE ENGINEER FOR REVIEW AND APPROVAL OF ALTERNATIVE METHODS OF INSTALLATION.

25. CONTRACTOR SHALL REVIEW ELECTRICAL POWER REQUIREMENTS FOR ALL MECHANICAL EQUIPMENT PRIOR TO ORDERING. SUBMIT ONE COPY OF EQUIPMENT SUBMITTALS TO ELECTRICAL CONTRACTOR FOR COORDINATION.

26. MECHANICAL CONTRACTOR SHALL FURNISH STARTERS FOR ALL THREE-PHASE MECHANICAL EQUIPMENT (EXCEPT FOR STARTERS THAT ARE SHOWN TO BE PROVIDED IN MOTOR CONTROL CENTERS). STARTERS SHALL HAVE THREE-LEG CLASS 10 TRIP-FREE OVERLOAD PROTECTION, WITH MANUAL RESET, AND SHALL BE NEMA RATED. STARTERS SHALL BE INSTALLED AND WIRED BY ELECTRICAL CONTRACTOR EXCEPT WHERE SUPPLIED INTEGRAL WITH MECHANICAL EQUIPMENT. MECHANICAL CONTRACTOR SHALL PROVIDE SAFETY DISCONNECT SWITCHES FOR ALL MECHANICAL EQUIPMENT WHERE NOT SPECIFICALLY INDICATED ON PLANS TO BE PROVIDED BY ELECTRICAL CONTRACTOR.

27. MECHANICAL CONTRACTOR SHALL EMPLOY THE SERVICES OF A QUALIFIED TEMPERATURE CONTROLS CONTRACTOR FOR INSTALLATION OF ALL CONTROLS WORK. SUBMIT CONTRACTOR'S QUALIFICATIONS TO ENGINEER FOR REVIEW.

28. TEMPERATURE CONTROLS CONTRACTOR SHALL PROVIDE ALL WIRING ASSOCIATED WITH THE AUTOMATIC TEMPERATURE CONTROL SYSTEM, INCLUDING 120V FOR CONTROL PANELS, CONTROL VALVES, AND CONTROL DAMPERS. ELECTRICAL WIRING SHOWN ON ELECTRICAL DRAWINGS SHALL BE PERFORMED BY ELECTRICAL CONTRACTOR. SUBMIT CONTROL DIAGRAMS TO ENGINEER FOR REVIEW.

29. ALL NEW AND RELOCATED MATERIALS INSTALLED IN CEILING RETURN AIR PLENUM SHALL BE U.L. 181 CLASS 1 RATED, WITH A MAXIMUM FLAME SPREAD INDEX OF 25 AND A MAXIMUM SMOKE-DEVELOPED INDEX OF 50. REMOVE AND REPLACE, AS NECESSARY, ALL MATERIALS NOT IN COMPLIANCE WITH CURRENT CODE.

30. ALL MOTORIZED EQUIPMENT SHALL BE PROVIDED WITH SUITABLE VIBRATION ISOLATION. FLEXIBLE CONNECTORS SHALL BE PROVIDED AT ALL DUCTWORK AND PIPING CONNECTIONS TO SUCH MOTORIZED EQUIPMENT.

31. PROVIDE SEISMIC RESTRAINTS FOR ALL MECHANICAL SYSTEMS AND EQUIPMENT AS REQUIRED BY THE CURRENT APPLICABLE BUILDING CODE.

32. ALL FIRE DAMPERS, BALANCING DAMPERS, VALVES, EQUIPMENT, FILTERS AND CONTROLS SHALL BE ACCESSIBLE. MECHANICAL CONTRACTOR SHALL PROVIDE ACCESS PANELS AS REQUIRED TO FACILITATE MAINTENANCE, REPAIR AND ADJUSTMENT OF ANY CONCEALED EQUIPMENT, DAMPERS, VALVES, CONTROLS, ETC. COORDINATE LOCATIONS OF REQUIRED ACCESS PANELS WITH ARCHITECT.

33. ALL HVAC UNITS AND OTHER MECHANICAL EQUIPMENT SHALL BE FIELD LABELED WITH UNIT NUMBER AND AREA SERVED. IN ADDITION, ALL PIPING, VALVES AND CONTROL DEVICES SHALL BE IDENTIFIED WITH LABELS. ALL EQUIPMENT SHALL BE IDENTIFIED WITH LETTERS MINIMUM 2" HIGH, AND ADDITIONALLY, ALL PIPING SHALL BE IDENTIFIED WITH 6" LONG FLOW ARROWS. PIPE IDENTIFICATION MARKERS SHALL BE SPACED AT A MAXIMUM OF 20 FEET ON CENTERS ALONG EACH PIPING RUN. IDENTIFICATIONS SHALL MATCH THOSE ON THE EQUIPMENT SCHEDULES.

34. CHECK, VERIFY AND MAKE OPERABLE ALL NEW AND EXISTING EQUIPMENT TO COMPLY WITH MANUFACTURER'S SPECIFICATIONS. PROVIDE SERVICE AND MAINTENANCE ON ALL FAN-POWERED VAV UNITS, ETC. AS REQUIRED TO BRING THEM TO PROPER OPERATING CONDITION, INCLUDING, BUT NOT LIMITED TO, CLEANING OF COILS AND ENCLOSURES, LUBRICATION, AND INSTALLATION OF NEW FILTERS.

CODE REFERENCE TO IMC 2009
UNLESS OTHERWISE NOTED

35. CHECK, VERIFY AND MAKE OPERABLE ALL CONTROL WORK AND TUBING OR WIRING FOR ALL SYSTEMS ASSOCIATED WITH THE PROJECT AREA.

36. MECHANICAL CONTRACTOR SHALL CONTACT THE ENGINEER 48 HOURS PRIOR TO SUBSTANTIAL COMPLETION OF CONSTRUCTION OR INSTALLATION OF CEILING TILE, TO SCHEDULE A FINAL PUNCH LIST WALK-THROUGH.

37. SUBMIT OPERATING AND MAINTENANCE BROCHURES FOR ALL EQUIPMENT INSTALLED UNDER THIS CONTRACT.

38. SUBMIT COMPLETE AS-BUILT DRAWINGS FOR EACH FLOOR AREA ON REPRODUCIBLE MEDIA OR ELECTRONIC FILES IN AUTOCAD VERSION 2007 OR LATER.

39. ALL DUCTWORK SHALL BE MINIMUM 26 GAUGE SHEET METAL UNLESS OTHERWISE INDICATED. REFER TO SMACNA GUIDE FOR REQUIRED GAUGES AND REINFORCEMENT REQUIREMENTS.

40. ALL ELBOWS OF RECTANGULAR DUCTWORK EXCEEDING 45 DEGREES SHALL HAVE DOUBLE THICKNESS TURNING VANES OR SHALL BE LONG RADIUS TYPE. ALL ELBOWS OF ROUND DUCTWORK SHALL BE LONG RADIUS TYPE.

41. PROVIDE ALL TRANSITIONS REQUIRED FOR INSTALLING DUCTWORK PER DRAWINGS AND AS REQUIRED TO AVOID OBSTRUCTIONS. ALL TRANSITIONS SHALL MAINTAIN MINIMUM OF EQUIVALENT FREE AREA OF DUCTWORK TO WHICH THEY ARE ATTACHED.

42. PROVIDE SPIN-IN FITTINGS WITH BUTTERFLY DAMPERS FOR ALL NEW AND EXISTING ROUND SUPPLY RUN-OUT DUCTS TO DIFFUSERS AND ALL ROUND RETURN/EXHAUST RUN-OUT DUCTS TO RETURN/EXHAUST GRILLES. ANY DIFFUSERS OR GRILLES INSTALLED WHERE SAID BUTTERFLY DAMPERS WOULD BE INACCESSIBLE SHALL BE PROVIDED WITH INTEGRAL BALANCING DAMPERS.

43. ALL DUCTWORK (HIGH PRESSURE AND LOW PRESSURE), NEW AND EXISTING, SHALL BE SEALED AIR TIGHT. SEAL ALL DUCTWORK, JOINTS AND SEAMS WITH MASTIC NON-HARDENING DUCT SEALER. COORDINATE THIS WORK WITH THE BUILDING OPERATING PERSONNEL SO THAT THE MAIN HIGH AND MEDIUM PRESSURE DUCTWORK CAN BE SHUT OFF TO ALLOW MANUFACTURER'S REQUIRED CURE TIME FOR THE DUCT SEALER.

44. ALL SUPPLY AIR DUCTWORK, NEW AND EXISTING, SHALL BE INSULATED. ALL SUPPLY AND OUTSIDE AIR INTAKE DUCTWORK SHALL BE VAPOR TIGHT. NEW RECTANGULAR DUCTWORK SHALL BE GALVANIZED SHEET METAL, INTERNALLY LINED WITH 1" THICK, 2.0 LB/CU FT DENSITY DUCT LINER EQUAL TO MANVILLE "LINACOUSTIC." ALL NEW ROUND DUCTWORK AND ALL EXISTING UNINSULATED ROUND AND RECTANGULAR DUCTWORK SHALL BE WRAPPED WITH 1-1/2" THICK, 1.0 LB/CU FT DENSITY DUCT WRAP EQUAL TO MANVILLE "MICROLITE." ALL WRAP INSULATION SEAMS AND JOINTS SHALL BE SEALED VAPOR-TIGHT WITH FOIL-SCRIM-KRAFT TAPE. ALL SUPPLY AIR AND OUTSIDE AIR DUCTWORK LOCATED WITHIN BUILDING SHALL BE INSULATED WITH A MINIMUM OF R-5 INSULATION. ALL SUPPLY AIR AND RETURN AIR DUCTWORK LOCATED OUTSIDE THE BUILDING ENVELOPE SHALL BE INSULATED WITH A MINIMUM OF R-8 INSULATION AND COVERED WITH 22 GAUGE ALUMINUM JACKET SCREWED IN PLACE WITH ALL JOINTS CAULKED WATER TIGHT. EXCEPTION: ALL EXPOSED ROUND DUCTWORK (WITHIN CONDITIONED SPACE) SHALL BE UNINSULATED METAL SPIRAL TYPE.

45. ALL DUCT DIMENSIONS SHOWN ARE INSIDE CLEAR DIMENSIONS IN INCHES.

46. USE OF FLEXIBLE INSULATED DUCTWORK SHALL NOT EXCEED 6'-0" IN LENGTH FOR CONNECTING ANY INDIVIDUAL SUPPLY DIFFUSER OR RETURN GRILLE (6" W.G. RATED POSITIVE STATIC PRESSURE AND 0.5" W.G. RATED NEGATIVE STATIC PRESSURE. SUPPORT FLEXIBLE DUCTWORK AT NO GREATER THAN 3 FEET ON CENTERS WITH 1" WIDE 2- GAUGE GALVANIZED STEEL LOOPS. CONNECTIONS TO EXHAUST GRILLES SHALL BE MADE WITH RIGID DUCTWORK ONLY.

47. ALL NEW LOW PRESSURE/LOW VELOCITY (2" W.G. S.P. OR LESS) FLEXIBLE DUCTWORK SHALL BE EQUAL TO FLEXMASTER TYPE 5M WITH 1-1/2" THICK INSULATION AND ALUMINIZED INNER AND OUTER JACKET.

48. ALL NEW HIGH PRESSURE/HIGH VELOCITY (2"-6" W.G. S.P. MAX) FLEXIBLE DUCTWORK, WHERE ALLOWED BY CODE, SHALL BE EQUAL TO FLEXMASTER TYPE TL-M WITH 1-1/2" THICK INSULATION, ALUMINIZED OUTER JACKET AND FLEXIBLE ALUMINUM DUCTWORK CORE ON INSIDE. LENGTH OF CONNECTION SHALL NOT EXCEED 6'-0".

49. EXISTING FLEXIBLE DUCTWORK WHICH REMAINS IN PLACE MAY BE REUSED IF IT IS PROPERLY LABELED WITH U.L. 181 TAG. EXISTING FLEXIBLE DUCTWORK NOT U.L. APPROVED SHALL BE REMOVED AND REPLACED WITH THAT SPECIFIED IN NOTES ABOVE.

50. FINAL CONNECTION OF FLEXIBLE DUCTWORK TO RIGID RUN-OUT DUCTS AND TO CEILING DIFFUSERS SHALL BE MADE WITH 0.5" WIDE, POSITIVE-LOCKING STEEL STRAPS AND ADHESIVE. (APPLIES TO NEW FLEXIBLE DUCTWORK AND EXISTING FLEXIBLE DUCTWORK WHICH REMAINS.)

51. ALL 24" x 24" CEILING SUPPLY AIR DIFFUSERS SHALL BE ADJUSTED OR PROVIDED FOR 4-WAY THROW. EXCEPT AS NOTED OTHERWISE INDICATED BY DIRECTIONAL ARROWS ON DRAWINGS.

52. PROVIDE AND INSTALL U.L. LISTED TYPE "B" FIRE DAMPERS AT ALL PENETRATIONS IN NEW AND EXISTING FIRE RATED WALLS AS REQUIRED. FIELD VERIFY ALL EXISTING DUCTWORK TO VERIFY FIRE DAMPER LOCATION REQUIREMENTS. PROVIDE COMBINATION FIRE/SMOKE DAMPERS AS SHOWN ON DRAWINGS, CLASS II FOR VELOCITIES UP TO 1,500 FPM, CLASS I FOR VELOCITIES ABOVE 1,500 FPM. FIRE/SMOKE DAMPERS SHALL BE DYNAMIC RATED. PROVIDE INSTALLATION INSTRUCTIONS FOR FIRE/SMOKE DAMPERS TO FIELD INSPECTOR AT TIME OF INSPECTION.

53. FIRE CAULK FIRE RATED WALLS, CEILINGS, AND FLOOR PENETRATION OPENINGS WITH HILTI (OR EQUAL) FIRE RATED CAULKING.

54. MECHANICAL CONTRACTOR SHALL INSTALL DUCT SMOKE DETECTOR IN MAIN AIR DUCT OF ALL MECHANICAL AIR-MOVING SYSTEMS WHERE REQUIRED BY CODE OR LOCAL AUTHORITIES. DETECTORS SHALL BE FURNISHED AND CONNECTED TO THE FIRE ALARM SYSTEM (WHERE APPLICABLE) AND HARDWIRED TO THE FAN UNIT FOR AUTOMATIC SHUTDOWN BY ELECTRICAL/FIRE ALARM CONTRACTOR.

55. TYPE B DOUBLE-WALL FLUE VENTS U.L. LISTED SHALL BE PROVIDED FOR ALL GAS-FIRED EQUIPMENT WITH ATMOSPHERIC BURNERS. DOUBLE-WALL PRESSURIZED SYSTEMS SHALL BE PROVIDED FOR FORCED-DRAFT TYPE BURNERS.

56. UNIT HEATER: FURNISH AND INSTALL HOT WATER PIPED UNIT HEATERS COMPLETE WITH ALL TEMPERATURE AND SAFETY CONTROLS FOR A COMPLETE OPERATIONAL SYSTEM.

57. EXHAUST FANS; FURNISH AND INSTALL UNITS COMPLETE WITH ALL SWITCHING AND SAFETY CONTROLS NECESSARY FOR A COMPLETE OPERATIONAL SYSTEM, INSTALL BACKDRAFT DAMPER IF NOT INTEGRAL TO THE EXHAUST FAN.

58. PROVIDE OPERATING MANUALS TO THE OWNER AND ENGINEER FOR ALL SYSTEMS AND EQUIPMENT INCLUDING MANUFACTURERS MAINTENANCE MANUALS. INCLUDE LUBRICATION, FILTER TYPES, AND SIZES, STARTING AND STOPPING PROCEDURES. LIST CONTRACTORS CONTACT INFORMATION (PHONE NUMBER AND EMAIL).

59. PROVIDE ALL MECHANICAL SYSTEM CONTROLS, CONTROLLERS, CONTROL TRANSFORMERS, DISCONNECTS, STARTERS, CONTROL WIRING, ASSOCIATED CONTROL POWER WIRING, AND ALL WORK NECESSARY FOR A COMPLETE AND OPERATIONAL SYSTEM.

60. SLEEVES AND COLLARS SHALL BE PROVIDED FOR ALL DUCTWORK AND PIPES THROUGH WALLS, FLOORS, AND CEILINGS. PROVIDE CHROME PLATED ESCUTCHEONS FOR EXPOSED PIPING PENETRATIONS THROUGH CEILINGS, FLOORS, AND WALLS IN FINISHED AREAS. ALL WATER, SOIL, WASTE, AND VENT AND TRIM INCLUDING FITTINGS TO BE CHROME PLATED WHERE EXPOSED.

61. GUARANTEE ALL LABOR AND NEW EQUIPMENT FOR ONE YEAR FROM THE DATE OF ACCEPTANCE BY OWNER.

62. ALL WORK SHALL BE PERFORMED BY PROPERLY LICENSED MECHANICS OR UNDER THEIR DIRECT SUPERVISION. ALL MATERIALS AND EQUIPMENT SHALL MEET THE REQUIREMENTS OF THE APPLICABLE STANDARDS OF UL AND SHALL BEAR THE UL LABEL AS EVIDENCE THAT THE MATERIAL AND/OR EQUIPMENT MEETS THIS REQUIREMENT. ALL WORK SHALL MEET THE REQUIREMENTS OF LOCAL CODES.

63. CUT AND PATCH TO MATCH ADJACENT AREAS. NO STRUCTURAL MEMBER SHALL BE CUT OR NOTCHED.

64. ALL WORK IN FINISHED AREAS SHALL BE CONCEALED UNLESS SPECIFICALLY NOTED AS EXPOSED ON PLANS. PRIOR TO THE INSTALLATION OF ANY EXPOSED WORK THE CONTRACTOR SHALL VERIFY AND OBTAIN ARCHITECTURAL APPROVAL OF THE EXACT LOCATION AND INTENT.

65. RFI'S FROM CONTRACTORS SHALL INCLUDE AT LEAST ONE PROPOSED SOLUTION WHICH COMPLIES WITH THE INTENT OF CONTRACT DOCUMENTS.

TEST AND BALANCE REQUIREMENTS

1. ALL SYSTEMS SHALL BE TESTED AND BALANCED BY AN INDEPENDENT, APPROVED, TEST AND BALANCE COMPANY. COMPLY WITH BASE BUILDING SPECIFICATIONS. SUBMIT (2) COMPLETE REPORTS FOR REVIEW BY ENGINEER.

2. VERIFY AND SUBMIT VERIFICATION FOR EACH ZONE FULL COOLING, MINIMUM COOLING AND FULL HEATING CAPACITY AS REQUIRED. SUBMIT AIR QUANTITIES AT MINIMUM DESIGN STATIC PRESSURES AND ENTERING AND LEAVING TEMPERATURES FOR COOLING AND HEATING MODES.

3. ALL SUPPLY AIR DIFFUSERS AND EXHAUST REGISTERS SHALL BE BALANCED TO CFM SHOWN ON PLANS.

4. PROVIDE TEST AND BALANCE AND START-UP REPORT FOR ALL HVAC UNITS, AUX. AIR CONDITIONING SYSTEMS, AND EXHAUST FANS. REPORT SHALL INCLUDE ALL NAMEPLATE DATA, DESIGN DATA, MEASURED MOTOR AMP DRAW, VOLTAGE, CFM, SUCTION AND DISCHARGE STATIC PRESSURES, AND SUCTION AND DISCHARGE DRY BULB AND WET BULB TEMPERATURES.

5. MINIMUM OUTSIDE AIR CFM FOR ROOFTOP HVAC UNITS AND OTHER AIR HANDLING UNITS SHALL BE SET AS SCHEDULED.

6. TEST AND BALANCE REPORTS SHALL BE TYPEWRITTEN OR COMPUTER PRINTER GENERATED.

HVAC EQUIPMENT LEGEND

SYMBOL	MARK	DESCRIPTION
	UH-1	MODINE UNIT HEATER MODEL #PDP250AE0130 250,000 / 200,000 BTU INPUT / OUTPUT 3700 CFM
	EF-1	PANASONIC EXHAUST FAN MODEL #FV-08WQ1 70 CFM
	EF-2	MAXXAIR EXHAUST FAN MODEL #IF18 3000 CFM
	EWH-1	BOSCH ELECTRIC WATER HEATER MODEL # TRONIC 3000T ES2.5
	CF-1	BIG ASS FANS MODEL: PFX3-12 CEILING FAN

GAS PIPING LEGEND

SYMBOL	MARK	DESCRIPTION
— — —	NG	NATURAL GAS LINE

GAS LOAD TABLE

COMPONENT TAG	INPUT BTU (BTU/H)	LENGTH (LINEAR FT)
INITIAL RISER LENGTH		15
Shop/Space heater (UH)	250000	160
TOTAL:	250000	175
Minimum Gas Pipe Size (in):	**1/2"**	

SHEET INDEX

ENGINEERINGSTUDIO DENVER

ENGINEERING STUDIO DENVER
602 Park Point Dr.
Golden, CO 80401

720.612.7553
dustin@engineeringstudiodenver.com
derek@engineeringstudiodenver.com

TIMBERLINE LANDSCAPING
8110 OPPORTUNITY VIEW
COLORADO SPRINGS, CO 80939

DRAWN BY: DS
CHECKED BY: DR

REVISIONS:

No.	Description	Date
1	50% CD	1/26/18
2	100% CD	2/5/18
3		
4		

ISSUE RECORD:

No.	Description	Date

SHEET CONTENTS:

MECHANICAL NOTES / SCHEDULE

COLORADO LICENSED
DUSTIN RANDALL
36490
PROFESSIONAL ENGINEER
2/5/18

PROJECT NO.: 9092

DATE: 2/5/2018

DRAWING NO.:

M 0.0

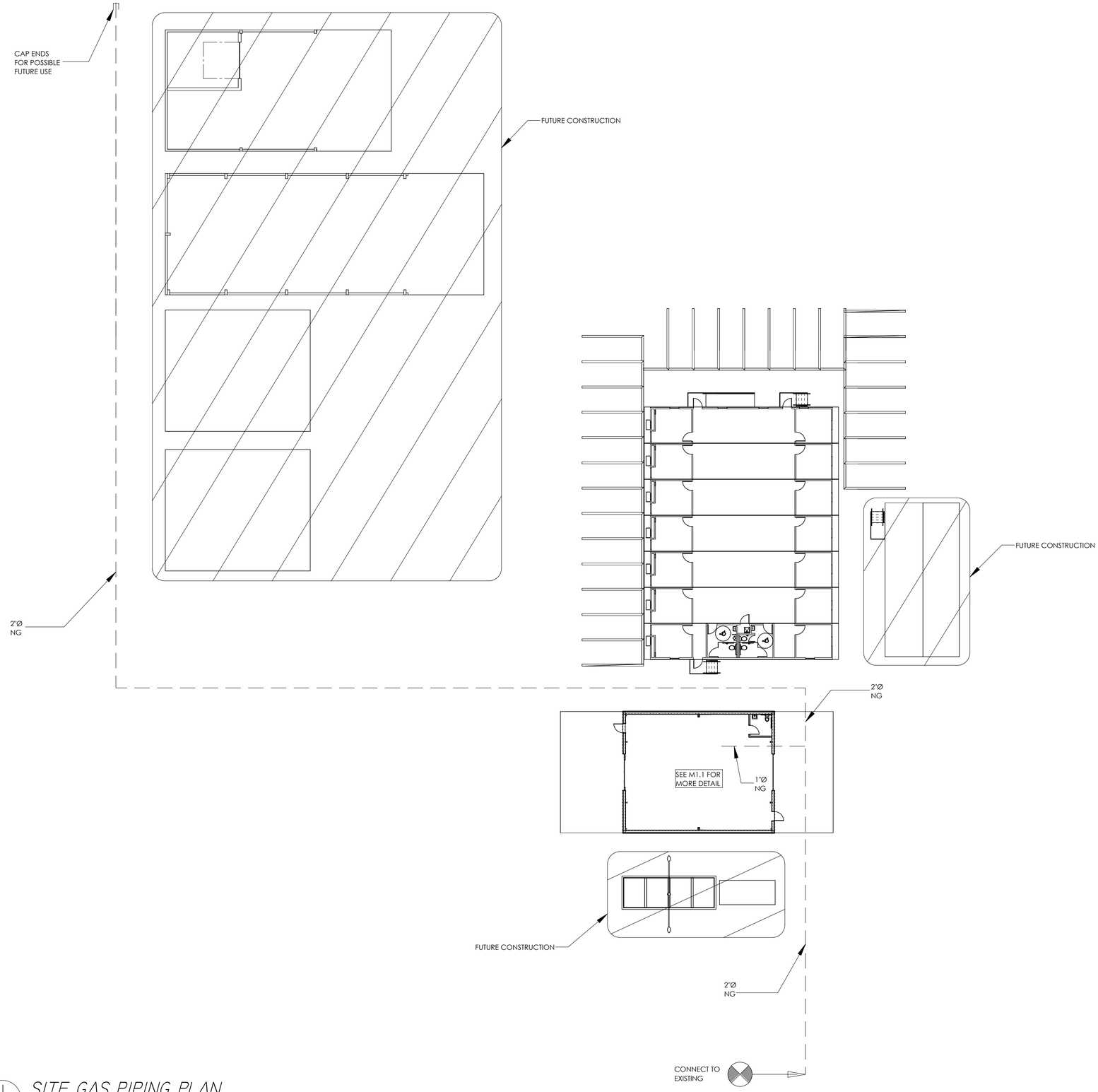

1 / M 1.0 SITE GAS PIPING PLAN
SCALE: 1/16" = 1'-0"

ENGINEERINGSTUDIO DENVER

ENGINEERING STUDIO DENVER
602 Park Point Dr.
Golden, CO 80401

720.612.7553
dustin@engineeringstudiodenver.com
derek@engineeringstudiodenver.com

TIMBERLINE LANDSCAPING

8110 OPPORTUNITY VIEW
COLORADO SPRINGS, CO 80939

DRAWN BY: DS
CHECKED BY: DR

REVISIONS:

No.	Description	Date
1	50% CD	1/26/18
2	100% CD	2/5/18
3		
4		

ISSUE RECORD:

No.	Description	Date

SHEET CONTENTS:

SITE GAS PIPING PLAN

COLORADO LICENSED
DUSTIN RANDLE
45405
PROFESSIONAL ENGINEER
2/5/18

PROJECT NO.: 9092
DATE: 2/5/2018

DRAWING NO.:
M 1.0

HVAC EQUIPMENT LEGEND		
SYMBOL	MARK	DESCRIPTION
	UH-1	MODINE UNIT HEATER MODEL #PDP250AE0130 250,000 / 200,000 BTU INPUT / OUTPUT 3700 CFM
	EF-1	PANASONIC EXHAUST FAN MODEL #FV-08WQ1 70 CFM
	EF-2	MAXXAIR EXHAUST FAN MODEL #IF18 3000 CFM
	EWH-1	BOSCH ELECTRIC WATER HEATER MODEL # TRONIC 3000T ES2.5
	CF-1	BIG ASS FANS MODEL: PFX3-12 CEILING FAN

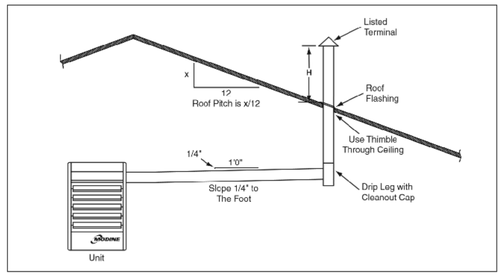

2 M 1.1 PITCHED ROOF VENT DETAIL

SCALE: NOT TO SCALE

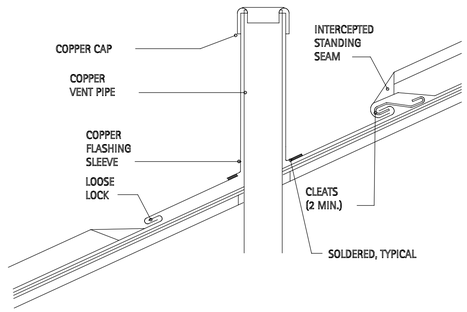

3 M 1.1 ROOF VENT FLASHING DETAIL

SCALE: NOT TO SCALE

GENERAL NOTES

1. NEW WORK, ALTERATIONS OR ADDITIONS TO MECHANICAL SYSTEMS ARE SUBJECT TO FIELD INSPECTION.
2. HVAC SYSTEMS SHALL BE INSTALLED IN ACCORDANCE WITH CHAPTER 3 OF IMC/IFGC.
3. DUCT CONSTRUCTION AND INSTALLATION SHALL CONFORM TO SECTION 603 OF IMC. INSULATION REQUIREMENTS SHALL CONFORM TO SECTION 803.2.8 OF IECC.
4. FACTORY MADE FLEXIBLE AIR DUCT INSTALLATION SHALL CONFORM TO SECTION 603.6 IMC.
5. INSTALLATION OF EQUIPMENT SHALL CONFORM TO SECTION 1503.2.3 IBC AND 306 OF IFGC.
6. PROVIDE AUTOMATIC FAN SHUTOFF SMOKE DETECTORS. LOCATIONS SHALL COMPLY WITH SECTION 606 OF IMC AND SECTION606.2 OF IMC.
7. ALL EXHAUST FANS MUST VENT DIRECTLY TO OUTSIDE (SIDEWALL OR ROOFTOP) PER IMC CHAPTER 5. LOCATE 3 FEET FROM PROPERTY LINES OR OPENINGS INTO BUILDING PER IMC 501.3. OPENINGS MUST BE PROTECTED ACCORDING TO IMC 501.3.2.
8. A/C UNITS SPECIFIED IN MECHANICAL SCHEDULE. TO BE LOCATED ON WEST SIDE OF STRUCTURE AND INSTALLED ACCORDING TO IMC 501, 503 AND 513.
9. ROOFTOP EXHAUST VENT FROM WATER HEATER MUST BE LOCATED MINIMUM 10' FROM OPERABLE OPENINGS (IMC 501.3.1).
10. SIDEWALL VENT FOR EXHAUST FANS MUST BE LOCATED MINIMUM 3' FROM OPERABLE OPENINGS (IMC 501.3.1).

Natural Ventilation Requirements IMC 402.2						
AREA TYPE	SPACE CODE (1) - DIRECT VENTED (2) - ADJOINING VENTED (3) - N/A	Floor Area (Ft²)	4% of Floor Area (Ft²)	8% of Floor Area (Ft²)	Natural Ventilated Opening Area (Ft²)	Total % of Code Required Ventilation
Wash Bay	1	1833	73.32	N/A	312	425.5%

VENTILATION NOTES

1. ALL WALL PENETRATIONS MUST HAVE FLASHING AND BACKDRAFT DAMPER.
2. COMBUSTION DUCTS TO SLOPE AWAY FROM UNITS.
3. ALL INSTALLED WITH FLASHING AND AN APPROVED RAIN CAP.
4. ALL INTAKE VENTS MUST BE LOCATED A MINIMUM OG 10' FROM EXHAUST FANS AND 10' FROM EDGE OF STRUCTURE.

GAS LOAD TABLE		
COMPONENT TAG	INPUT BTU (BTU/H)	LENGTH (LINEAR FT)
INITIAL RISER LENGTH		15
Shop/Space heater (UH)	250000	160
TOTAL:	250000	175
Minimum Gas Pipe Size (in):	**1/2"**	

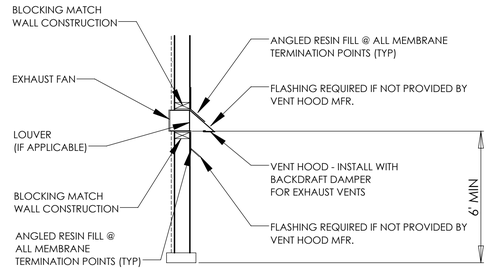

VERIFY DETAIL WITH VARCO PRUDEN BUIILDINGS. CONTRACTOR TO FOLLOW MANUFACTURER SPEC IN LIEU OF TYP. DETAIL

4 M 1.1 SECTION A-A: TYP WALL PENETRATION

SCALE: NOT TO SCALE

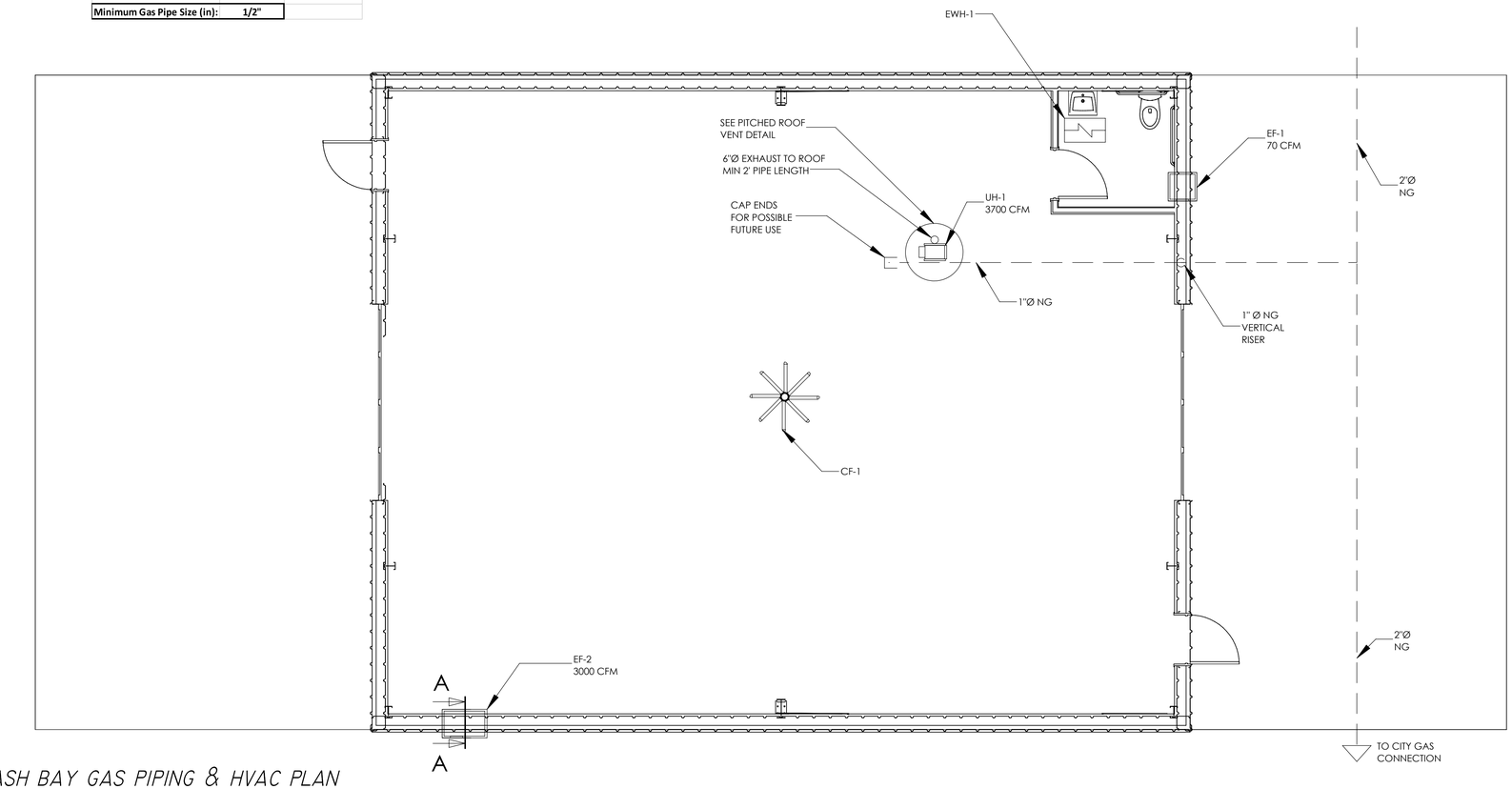

1 M 1.1 WASH BAY GAS PIPING & HVAC PLAN

SCALE: NOT TO SCALE

ENGINEERINGSTUDIO DENVER

ENGINEERING STUDIO DENVER
602 Park Point Dr.
Golden, CO 80401
720.612.7553
dustin@engineeringstudiodenver.com
derek@engineeringstudiodenver.com

TIMBERLINE LANDSCAPING

8110 OPPORTUNITY VIEW
COLORADO SPRINGS, CO 80939

DRAWN BY: DS
CHECKED BY: DR

REVISIONS:

No.	Description	Date
1	50% CD	1/26/18
2	100% CD	2/5/18
3		
4		

ISSUE RECORD:

No.	Description	Date

SHEET CONTENTS:

WASH BAY GAS PIPING & HVAC

COLORADO LICENSED DUSTIN RANGLE 45460 PROFESSIONAL ENGINEER

2/5/18

PROJECT NO.: 9092

DATE: 2/5/2018

DRAWING NO.:

M 1.1

BUILDING OUTLINE PLUMBING SPECIFICATIONS

1. SLEEVES AND COLLARS SHALL BE PROVIDED FOR ALL PIPING THROUGH WALLS, FLOORS, AND CEILINGS. PROVIDE CHROME PLATED ESCUTCHEONS FOR EXPOSED PIPING PENETRATIONS THROUGH CEILINGS, FLOORS, AND WALLS IN FINISHED AREAS. ALL WATER, SOIL, WASTE, AND VENT AND TRIM INCLUDING FITTINGS TO BE CHROME PLATED WHERE EXPOSED.
2. GUARANTEE ALL LABOR AND NEW EQUIPMENT FOR ONE YEAR FROM THE DATE OF ACCEPTANCE BY OWNER.
3. ALL WORK SHALL BE PERFORMED BY PROPERLY LICENSED PLUMBERS OR UNDER THEIR DIRECT SUPERVISION. ALL MATERIALS AND EQUIPMENT SHALL MEET THE REQUIREMENTS OF THE APPLICABLE STANDARDS OF UL AND SHALL BEAR THE UL LABEL AS EVIDENCE THAT THE MATERIAL AND/OR EQUIPMENT MEETS THIS REQUIREMENT. ALL WORK SHALL MEET THE REQUIREMENTS OF LOCAL CODES.
4. CUT AND PATCH TO MATCH ADJACENT AREAS. NO STRUCTURAL MEMBER SHALL BE CUT OR NOTCHED.
5. ALL WORK IN FINISHED AREAS SHALL BE CONCEALED UNLESS SPECIFICALLY NOTED AS EXPOSED ON PLANS. PRIOR TO THE INSTALLATION OF ANY EXPOSED WORK THE CONTRACTOR SHALL VERIFY AND OBTAIN ARCHITECTURAL APPROVAL OF THE EXACT LOCATION AND INTENT.
6. RFI'S FROM CONTRACTORS SHALL INCLUDE AT LEAST ONE PROPOSED SOLUTION WHICH COMPLIES WITH THE INTENT OF CONTRACT DOCUMENTS.
7. COORDINATE ACTUAL LOCATION OF PLUMBING FIXTURES AND ROUGH-INS WITH ARCHITECTURAL DRAWINGS PRIOR TO BEGINNING WORK.
8. CONTRACTOR SHALL FIELD VERIFY ALL PIPING AND PLUMBING LOCATIONS AND INVERTS PRIOR TO TRENCHING FOR OR INSTALLATION OF NEW PIPING. ALLOW FOR COST OF X-RAYING FLOOR AS REQUIRED FOR LOCATING ANY BURIED PIPING AND PRIOR TO MAKING ANY FLOOR PENETRATIONS.
9. EXCAVATE FOR ALL PLUMBING WORK, COMPACT TO 95% AASHO OR PROCTOR DENSITY IN 6" MAXIMUM LAYERS AT OPTIMUM MOISTURE CONTENT. REWORK IF ANY SETTLEMENT WITHIN THE FIRST YEAR GUARANTEE.
10. PROVIDE ISOLATION VALVES AT ALL PLUMBING FIXTURES REQUIRING HOT AND/OR COLD WATER. PROVIDE BALL VALVE LINE-SIZE RATED FOR 40 PSIG WOG.
11. ISOLATE EACH PIECE OF EQUIPMENT AND EACH ROUGH-IN EXCLUDING WASTE AND VENT.
12. ALL DOMESTIC HOT AND COLD WATER PIPING ABOVE GRADE SHALL BE TYPE L COPPER WITH NO-LEAD 95/5 SOLDERED FITTINGS. TYPE K SOFT COPPER SHALL BE USED BELOW GRADE.
13. PLUMBING CONTRACTOR TO PROVIDE A WATER PRESSURE TEST ON SITE. WHERE WATER PRESSURE IS OVER 60 PSI THEN PROVIDE FULL SIZE PRZ VALVE ON THE SECONDARY SIDE OF THE RPBFP.
14. PROVIDE BRANCH SHUT-OFF VALVES ON ALL WATER LINES EXTENDING FROM MAINS.
15. ALL HEATING, CHILLED AND CONDENSER WATER PIPING 2" AND SMALLER SHALL BE TYPE L COPPER WITH SOLDERED FITTINGS. 2-1/2" AND LARGER SHALL BE SCHEDULE 40 WELDED BLACK STEEL.
16. ALL REFRIGERANT PIPING SHALL BE TYPE K HARD DRAWN COPPER TUBING WITH WROUGHT COPPER SILVER SOLDERED FITTINGS AND COUPLINGS OR TYPE L COPPER, REFRIGERANT GRADE, COLOR CODED AND MARKED ACR. SOFT-ANNEALED COPPER TUBING MAY BE USED IN SIZES UP TO 1-3/8", AND WHEN USED SHALL BE ENCLOSED IN IRON OR STEEL PIPING OR IN CONDUIT, MOLDING OR RACEWAY WHICH WILL PROTECT SAID TUBING AGAINST DAMAGE. INSULATE ALL NEW AND EXISTING REFRIGERANT SUCTION AND HOT GAS PIPING IN SAME MANNER AS SPECIFIED FOR DOMESTIC HOT AND COLD WATER PIPING, WITH THICKNESS IN ACCORDANCE WITH PIPING INSULATION SCHEDULE. PROVIDE JACKET WITH VAPOR BARRIER FOR SUCTION LINES.
17. ALL INTERIOR ABOVE-GRADE WASTE, VENT, AND STORM DRAIN PIPING SHALL BE PVC. ALL INTERIOR BELOW-GRADE WASTE, VENT, AND STORM DRAIN PIPING SHALL BE PVC. ALL HORIZONTAL WASTE, VENT, AND STORM DRAIN PIPING SHALL BE SLOPED AT A MINIMUM OF 1/8" PER FOOT OR AS OTHERWISE REQUIRED BY CODE. PIPING INSTALLED BELOW GRADE SHALL BE COATED. INSULATE ROOF DRAIN PIPING (ABOVE GRADE) IN SAME MANNER AS SPECIFIED FOR DOMESTIC HOT AND COLD WATER PIPING, WITH THICKNESS IN ACCORDANCE WITH PIPING INSULATION SCHEDULE, AND PROVIDE JACKET WITH VAPOR BARRIER.
18. PROVIDE FLOOR DRAIN TRAP PRIMERS, TO BE PRIME PERFECT WITH VALVED 1/2" CW TO EACH FLOOR DRAIN, WITH ACCESS PANELS WHERE REQUIRED. SUBSTITUTE PROSET TRAP GUARDS WHERE ALLOWED BY CODE.
19. PROVIDE SANITARY SEWER SYSTEM CLEANOUTS AS REQUIRED BY LOCAL CODES. ALL CLEANOUTS REQUIRED ARE NOT NECESSARILY SHOWN ON PLANS. CLEANOUTS TO BE AT A MINIMUM OF 100' O.C., AT EVERY JUNCTION GREATER THAN 45°, AND AT THE BASE OF EACH WASTE STACK.
20. ALL EXTERIOR WASTE AND STORM DRAIN PIPING BEYOND 5'-0" OF FOUNDATION SHALL BE PVC, UNLESS OTHERWISE SHOWN ON CIVIL DRAWINGS.
21. ALL CONDENSATE DRAIN PIPING SHALL BE TYPE M COPPER.
22. PROVIDE DIELECTRIC COUPLINGS AT ALL CONNECTIONS BETWEEN DISSIMILAR METALS.
23. INSULATE ALL NEW AND EXISTING DOMESTIC HOT, COLD AND HOT WATER CIRCULATING WATER PIPING WITH FIBERGLASS HEAVY DENSITY PIPE INSULATION WITH FIRE RESISTANT JACKET AND SELF SEALING LAP. INSULATION THICKNESS SHALL BE IN ACCORDANCE WITH PIPING INSULATION SCHEDULE. INSULATE FITTINGS AND VALVE BODIES WITH MITERED SECTION FOR PIPE INSULATION OR WITH CEMENT TO A THICKNESS EQUAL TO ADJOINING PIPE INSULATION. FINISH FITTINGS AND VALVE BODIES WITH CANVAS AND SEIZE WITH LAGGING ADHESIVE. FLANGES AND UNIONS SHALL NOT BE COVERED. COVERING SHALL BE NEATLY TERMINATED ON EACH END OF SCREWED UNIONS WITH INSULATING CEMENT.
24. DO NOT LOCATE WATER PIPING IN EXTERIOR WALLS OR ATTICS. ROUTE PIPING INBOARD OF BUILDING INSULATION TO AVOID FREEZING. ELECTRIC HEAT TRACE ALL PIPING LOCATED IN UNHEATED AREAS WITH CHROMALOX 7.0 WATTS/FT, MI CABLE AND 1" THICK FIBERGLASS INSULATION COVER.
25. INSULATE ALL NEW AND EXISTING HEATING, CHILLED AND CONDENSER WATER PIPING IN SAME MANNER AS SPECIFIED FOR DOMESTIC HOT AND COLD WATER PIPING, WITH THICKNESS IN ACCORDANCE WITH PIPING INSULATION SCHEDULE. PROVIDE JACKET WITH VAPOR BARRIER FOR CHILLED WATER PIPING.
26. PRESSURE TEST ALL PIPING PER CODE BUT TO AT LEAST 150% MAXIMUM W.P.
27. ALL INTERIOR ABOVE GRADE GAS PIPING 2" AND SMALLER SHALL BE SCHEDULE 40 BLACK STEEL PIPE WITH 150 PSI O.W.G. BLACK BANDED MALLEABLE IRON SCREWED FITTINGS. ALL INTERIOR ABOVE GRADE GAS PIPING 2-1/2" AND LARGER, AND ALL BELOW GRADE INTERIOR GAS PIPING (ALL SIZES), SHALL BE WELDED SCHEDULE 40 BLACK STEEL. ALL BELOW GRADE INTERIOR BLACK STEEL GAS PIPING SHALL BE COATED. ALL BELOW GRADE GAS PIPING OUTSIDE OF THE BUILDING SHALL BE SCHEDULE 80 CPVC PIPING AND FITTINGS. ALL GAS PIPING INSTALLED ON ROOF SHALL BE SUPPORTED AT A MINIMUM OF EVERY 6 FEET, WITH 6" MINIMUM CLEARANCE FROM ROOF, EXCEPT WHERE GOVERNED BY MORE STRINGENT LOCAL CODES OR SPECIFICATIONS. ALL VISIBLE GAS PIPING SHALL BE LABELED WITH PRESSURE AT 6'-0" ON CENTERS. ALL PIPING EXPOSED TO WEATHER SHALL BE PAINTED.
28. PROVIDE FULL-SIZED SHUT-OFF VALVE AND 6" DIRT LEGS AT ALL CONNECTIONS TO GAS-FIRED EQUIPMENT. GAS PIPE TO BE CGA LISTED LINE-SIZE RATED FOR GAS PIPE.
29. ALL EQUIPMENT AND FIXTURES WHICH ARE CONNECTED TO A POTABLE WATER SUPPLY SHALL BE INSTALLED IN SUCH A MANNER AS TO ELIMINATE THE POSSIBILITY OF ANY PHYSICAL OR POTENTIAL CROSS-CONNECTION. VACUUM BREAKERS SHALL BE PROVIDED FOR ALL SUBMERGED/ENCLOSED OUTLETS, DISH MACHINE LINES, HOSE CONNECTIONS, ETC. VACUUM BREAKERS SHALL BE INSTALLED A MINIMUM OF 6" ABOVE THE OVERFLOW RIM AND LOCATED ON THE DISCHARGE SIDE OF THE LAST VALVE ON THE EQUIPMENT. APPROVED BACKFLOW PREVENTION DEVICES SHALL BE INSTALLED ON ALL CONTINUOUS PRESSURE LINES SUPPLYING EQUIPMENT SUCH AS SODA CARBONATORS, ICE MACHINES, ETC.
30. ALL FLOOR DRAINS AND FLOOR SINKS SHALL BE FLUSH-MOUNTED, PROPERLY SEALED, AND EASILY ACCESSIBLE FOR CLEANING AND MAINTENANCE.
31. ALL WATER LINES, WASTE AND VENT LINES, SODA SYRUP LINES, ETC. SHALL BE CONCEALED WITHIN THE WALL, BELOW FLOOR, OR ABOVE CEILING SURFACES.
32. FURNISH AND INSTALL PLUMBING FIXTURES ON CARRIERS AS SCHEDULED ON THE PLANS. PROVIDE CHROME PLATED ACCESSORIES AND PIPE COVER ON ALL EXPOSED FIXTURE RUNOUTS. PROVIDE ANGLE STOPS ON ALL FIXTURE RUNOUTS. PROVIDE INSULATION AND ROUGH-IN AS REQUIRED FOR COMPLIANCE WITH ADA REQUIREMENTS. PROVIDE ALL ACCESSORIES AND SPECIALTY ITEMS AS REQUIRED FOR A COMPLETE FIXTURE INSTALLATION.
33. ALL PIPING SHALL BE PROPERLY SUPPORTED, WITH PROVISIONS FOR HORIZONTAL BRACING AND EXPANSION/CONTRACTION AS REQUIRED. FOR INSULATED PIPING, AT EACH SUPPORT LOCATION, PROVIDE SHEET METAL SHIELDS FOR PIPING 2" AND SMALLER (EXCEPT WHERE REQUIRED TO BE CLAMPED) AND CALCIUM SILICATE THERMAL INSERTS WITH SHEET METAL SHIELDS FOR PIPING LARGER THAN 2" AND FOR ALL SIZES OF INSULATED PIPING REQUIRED TO BE CLAMPED. PROVIDE SUPPLEMENTAL STEEL SUPPORTS AS REQUIRED FOR INSTALLATION OF ALL PLUMBING MATERIALS, EQUIPMENT, AND APPARATUSES.
34. SEAL ALL PIPING PENETRATIONS THROUGH FIRE-RATED WALLS WITH U.L. APPROVED FIRESTOPPING MATERIAL. SUBMIT SHOP DRAWINGS TO ENGINEER FOR REVIEW AND APPROVAL, INCLUDING DETAILS OF CONSTRUCTION AND PROPOSED FIRE-RATED ASSEMBLIES, MATERIALS AND PRODUCTS USED, AND VERIFICATION OF OVERALL SYSTEM COMPLIANCE.
35. ALL PIPING SYSTEMS SHALL BE TESTED AND PROVEN TIGHT PRIOR TO CONCEALMENT. THE TEST SHALL BE WITNESSED BY OWNER'S REPRESENTATIVE.
36. ALL PIPING SHALL BE CLEANED AND FLUSHED PRIOR TO SERVICE. (DOMESTIC WATER PIPING SHALL BE STERILIZED.)
37. ALL RATED RETURN AIR PLENUMS MUST HAVE PLENUM RATED PIPING, OR PLENUM RATED PIPING INSULATION.

ALL CODES REFERENCE/COMPLIANT WITH IPC 2015

METALLIC FITTINGS

- 90° ELBOW
- UNION / COUPLING
- END CAP / PLUG
- CROSS
- TEE
- REDUCER
- ELBOW UP
- ELBOW DOWN

PVC FITTINGS

- 90° ELBOW
- UNION / COUPLING
- END CAP / PLUG
- REDUCER
- SANITAIRY TEE
- 45° WYE
- STRAIGHT WYE

PIPING LEGEND

SYMBOL	MARK	DESCRIPTION
	CW	DOMESTIC COLD WATER
	HW	DOMESTIC HOT WATER
	SW	SOLID WASTE LINE
	V	VENT LINE

VALVES

SYMBOL	ABBREV.	DESCRIPTION
	RPBFP	REDUCED PRESSURE BACK FLOW PREVENTOR
	BV	BALL VALVE
	CV	CHECK VALVE
	GV	GATE VALVE
	GLV	GLOBE VALVE
	PRV	PRESSURE REGULATING VALVE

DRAIN/CLEANOUT

SYMBOL	ABBREV.	DESCRIPTION
	FD	FLOOR DRAIN
	FCO	FLOOR CLEANOUT
	WCO	WALL CLEANOUT

PIPING INSULATION SCHEDULE

PIPING SYSTEM TYPE	MINIMUM INSULATION THICKNESS (IN.) FOR PIPE SIZES			
	UP TO 1.5"	2"	2.5" - 4"	5" - 6"
DOMESTIC COLD WATER.	0.5	0.5	1.0	1.0
DOMESTIC HOT WATER (SUPPLY, RECIRCULATED, AND TEMPERED).	1.5	2.0	2.0	2.0
SANITARY WASTE PIPING EXPOSED TO OUTDOOR AMBIENT TEMPERATURES.	1.5	1.5	2.0	2.0
REFRIGERANT SUCTION AND HOT GAS LINES.	1.5	1.5	1.5	1.5

PIPING INSULATION SCHEDULE NOTES:

1. ALL PIPING SYSTEMS LISTED ABOVE SHALL BE INSULATED WITH INSULATION THICKNESS AS INDICATED.
2. FOR ANY PIPING NOT NOTED ABOVE TO BE EXPOSED TO OUTDOOR AMBIENT TEMPERATURES, INCREASE INSULATION THICKNESS BY 0.5 INCHES WHEN INSTALLED IN SUCH EXPOSED LOCATIONS.
3. ALL INSULATED PIPING EXPOSED TO WEATHER SHALL BE PROTECTED WITH WEATHER-PROOF ALUMINUM JACKET.

THE CONTRACTOR SHALL NOTIFY COLORADO SPRINGS UTILITIES' INSPECTIONS OFFICE (NORTH: 668-4396 OR SOUTH: 668-4658) A MINIMUM OF 48 HOURS PRIOR TO THE START OF CONSTRUCTION.

SHEET INDEX

8110 OPPORTUNITY VIEW, COLORADO SPRINGS, CO 80939 — 2/5/2018

2015 IPC FIXTURE UNIT CALCULATIONS - WASH BAY & TEMP TRAILERS

FIXTURE:		Used (Y/N)	Quantity	2015 IPC Water FU	2012 IPC Waste FU	TOTAL WATER F.U.	TOTAL WASTE F.U.
Urinal, Wall 3/4" Flush Valve	Commercial/Public	Y	0	5.0	4	0	0
Waterless Urinal	Commercial/Public	N	0	0.0	0.5	0	0
Prep Sink	Commercial/Public	N	0	3.0	2	0	0
3-Comp Sink	Commercial/Public	N	0	3.5	2	0	0
Dishwasher	Commercial/Public	Y	0	1.4	2	0	0
Kitchen Sink w/Grinder	Commercial/Public	Y	0	4.0	2	0	0
Bar Sink	Commercial/Public	N	0	2.0	2	0	0
Lavatory	Commercial/Public	Y	3	2.0	1	6	3
Service Sink or Mop Basin	Commercial/Public	Y	2	3.0	2	6	4
Shower Head	Commercial/Public	Y	0	4.0	2	0	0
Clothes Washer 8lb	Commercial/Public	N	0	3.0	2	0	0
Clothes Washer 15lb	Commercial/Public	N	0	4.0	3	0	0
Water Closet, 1.6 gpf Flushometer	Commercial/Public	Y	3	2.0	4	6	12
Water Closet, 1.6 gpf Gravity Tank	Commercial/Public	N	0	5.0	4	0	0
Drinking Fountain	Commercial/Public	Y	1	0.250	0.5	0.25	0.5
Hose Bibb	Commercial/Public	Y	2	10.0	0	20	0
Hose Bibb, Each Additional	Commercial/Public	Y	5	5.0	0	25	0
2" Floor Drain	All	Y	5	-	2	-	10
Floor Sink	All	N	0	-	2	-	0
TOTALS			24			63.25 WATER FU	29.5 WASTE FU

ESTIMATED PROBABLE PEAK DEMAND TABLE E103.3(3) =	37.7 GPM
DOES NOT INCLUDE IRRIGATION DEMAND =	0 GPM
TOTAL GPM =	37.7 GPM
MINIMUM TENANT CW PIPE SIZE =	2" SERVICE

WASTE SIZING: 4 " WASTE

FIXTURE CONNECTION SCHEDULE

FIXTURE	HW	CW	WASTE	VENT
WATER CLOSET - FLUSH TANK	--	1/2"	3"	2"
WATER CLOSET - GRAVITY TANK	--	1/2"	3"	2"
LAVATORY	1/2"	1/2"	2"	2"
HOSE BIBB	--	3/4"	--	--
2" FLOOR DRAIN	--	--	2"	2"
DRINKING FOUNTAIN	--	3/8"	1-1/4"	1-1/4"
SERVICE SINK OR MOP BASIN	1/2"	1/2"	2"	2"

SIZES SHOWN ARE MINIMUM PIPE SIZES TO A SINGLE FIXTURE.

GENERAL NOTE

ALL ITEMS THAT ARE FURNISHED BY OWNER, FUTURE, VENDOR, PLUMBING CONTRACTOR, GENERAL CONTRACTOR OR OTHER, ARE TO BE VERIFIED BY ALL TRADES, FOR ANY DISCREPANCIES OR DEVIATIONS FROM ENGINEERING SPECIFICATIONS

ENGINEERINGSTUDIO DENVER

ENGINEERING STUDIO DENVER
602 Park Point Dr.
Golden, CO 80401
720.612.7553
dustin@engineeringstudiodenver.com
derek@engineeringstudiodenver.com

TIMBERLINE LANDSCAPING
8110 OPPORTUNITY VIEW
COLORADO SPRINGS, CO 80939

DRAWN BY: DS
CHECKED BY: DR

REVISIONS:

NO.	DESCRIPTION	DATE
1	50% CD	11/26/18
2	100% CD	2/5/18
3		
4		

ISSUE RECORD:

NO.	DESCRIPTION	DATE

SHEET CONTENTS:

PLUMBING NOTES/SCHEDULE

COLORADO LICENSED DUSTIN RANDLE 38487 PROFESSIONAL ENGINEER
2/5/18

PROJECT NO.: 9092
DATE: 2/5/2018

DRAWING NO.: P 0.0

COLORADO SPRINGS UTILITIES
WATER PLAN NOTES

THE CONTRACTOR SHALL NOTIFY COLORADO SPRINGS UTILITIES' INSPECTIONS OFFICE (NORTH:668-4396 OR SOUTH: 668-4658) A MINIMUM OF 48 HOURS PRIOR TO THE START OF CONSTRUCTION.

GENERAL:

1.ALL CONSTRUCTION METHODS AND MATERIALS SHALL MEET COLORADO SPRINGS UTILITIES' WATER LINE EXTENSION AND SERVICE STANDARDS (WATER LESS).

2.THE CONTRACTOR SHALL OBTAIN LOCATES PRIOR TO ANY EXCAVATION.

3.COLORADO SPRINGS UTILITIES DOES NOT GUARANTEE THE ACCURACY OF LOCATIONS OF EXISTING PIPELINES, HYDRANTS, VALVES AND SERVICE LINES. IF FIELD CONDITIONS ARE FOUND TO BE DIFFERENT THAN SHOWN ON THE PLANS, THE CONTRACTOR SHALL NOTIFY THE INSPECTOR AND THE ENGINEER OF RECORD IMMEDIATELY.

4.NO TREES OR STRUCTURES ARE PERMITTED WITHIN FIFTEEN FEET (15') OF A WATER MAIN.

5.THE CONTRACTOR IS RESPONSIBLE FOR ANY DAMAGE TO ANY UTILITY FACILITIES AS A RESULT OF HIS ACTIONS. THE CONTRACTOR SHALL MAKE ALL THE REQUIRED REPAIRS IMMEDIATELY TO THE SATISFACTION OF COLORADO SPRINGS UTILITIES.

6.ALL FIELD STAKING SHALL COMPLY WITH THE WATER LESS.

7.THE CONTRACTOR SHALL MAKE THEIR BEST EFFORT TO ENSURE THAT WATER SERVICE TO ADJACENT PROPERTIES IS MAINTAINED DURING CONSTRUCTION.

8.CORROSION PROTECTION MEASURES SHALL COMPLY WITH THE WATER LESS.

9.NO SERVICE TAPS WILL BE ALLOWED UNTIL THE MAIN IS EXTENDED TO THE NEXT MAIN-LINE VALVE.

10.NO SERVICE TAPS SHALL BE MADE UNTIL AUTHORIZATION HAS BEEN GRANTED BY THE COLORADO SPRINGS UTILITIES' INSPECTOR.

11.ALL BENDS SHALL BE FIELD STAKED PRIOR TO CONSTRUCTION AND THE STATIONING ON THE FIELD STAKES SHALL MATCH THE STATIONING ON THE PLANS.

12.FIELD MODIFICATIONS TO A FIRE SERVICE LINE OR FIRE HYDRANT DESIGN OR LOCATION MAY NEED TO BE APPROVED BY THE DESIGN ENGINEER, COLORADO SPRINGS FIRE DEPARTMENT AND COLORADO SPRINGS UTILITIES, AS REQUIRED BY THE INSPECTOR.

13.REUSE OR SALVAGE OF ANY MATERIAL IS LEFT TO THE DISCRETION OF THE COLORADO SPRINGS UTILITIES INSPECTOR.

14.ALL TRENCH BACKFILL AND COMPACTION SHALL BE IN ACCORDANCE WITH SECTION 206 OF THE CITY OF COLORADO SPRINGS STANDARD SPECIFICATIONS MANUAL.

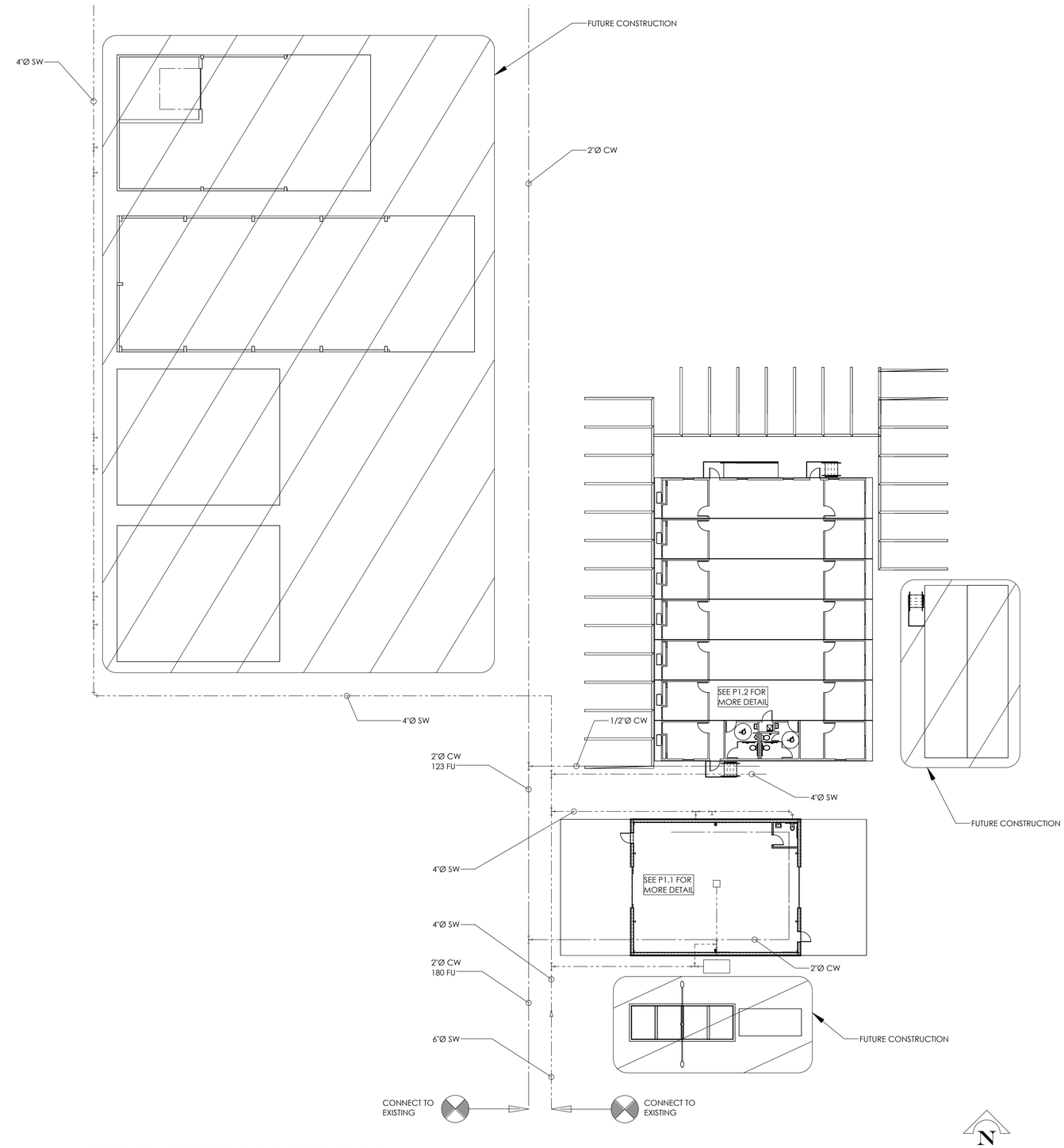

1 / P 1.0 SITE PLUMBING & WASTE PLAN

SCALE: 1/16" = 1'-0"

ENGINEERINGSTUDIO DENVER

ENGINEERING STUDIO DENVER
602 Park Point Dr.
Golden, CO 80401

720.612.7553
dustin@engineeringstudiodenver.com
derek@engineeringstudiodenver.com

TIMBERLINE LANDSCAPING

8110 OPPORTUNITY VIEW
COLORADO SPRINGS, CO 80939

DRAWN BY: DS
CHECKED BY: DR

REVISIONS:

No.	Description	Date
1	50% CD	1/26/18
2	100% CD	2/5/18
3		
4		

ISSUE RECORD:

No.	Description	Date

SHEET CONTENTS:

PLUMBING
SITE LAYOUT

COLORADO LICENSED PROFESSIONAL ENGINEER DUSTIN RANDLE 45480

2/5/18

PROJECT NO.: 9092

DATE: 2/5/2018

DRAWING NO.:

P 1.0

8110 OPPORTUNITY VIEW, COLORADO SPRINGS, CO 80939						2/5/2018
2015 IPC FIXTURE UNIT CALCULATIONS - WASH BAY						
FIXTURE:		Quantity	2015 IPC Water FU	2015 IPC Waste FU	TOTAL WATER F.U.	TOTAL WASTE F.U.
Urinal, Wall Flush Valve	Public	0	5.0	4	0	0
Waterless Urinal	Public	0	0.0	0.5	0	0
Prep Sink	Public	0	3.0	2	0	0
3-Comp Sink	Public	0	3.5	2	0	0
Dishwasher	Public	0	1.4	2	0	0
Kitchen Sink w/Grinder	Public	0	1.4	2	0	0
Bar Sink	Public	0	2.0	2	0	0
Hand Sink	Public	0	2.0	2	0	0
Lavatory	Public	1	2.0	1	2	1
Service Sink or Mop Basin	Public	1	3.0	2	3	2
Shower Head	Public	0	4.0	2	0	0
Clothes Washer Residential	Public	0	3.0	2	0	0
Clothes Washer Commercial	Public	0	4.0	3	0	0
Water Closet, 1.6 gpf Flush Valve	Public	1	2.0	4	2	4
Water Closet, 1.6 gpf Gravity Tank	Public	1	5.0	4	5	4
Drinking Fountain	Public	0	0.025	0.5	0	0
Hose Bibb (3/4")	Public	1	10.0	0	10	0
Hose Bibb, Each Additional	Public	5	1.0	0	5	0
2" Floor Drain	All	3	-	2	-	6
Floor Sink	All	0	-	2	-	0
TOTALS		13			27 Water FU	17 Waste FU
				Estimated Probable Peak Demand Table E103.3(3) =	22.3 GPM	
WASTE SIZING:				Does not include irrigation demand =	0 GPM	
4 " **WASTE**				**TOTAL GPM =**	22.3 GPM	
				Minimum Tenant CW Pipe Size =	1-1/4" Service	

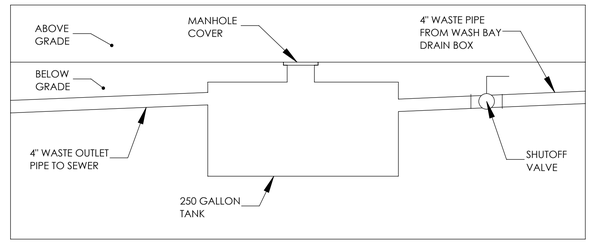

2 / P 1.1 MAG CHLORIDE TANK DETAIL
SCALE: NOT TO SCALE

COLORADO SPRINGS UTILITIES
WATER PLAN NOTES

THE CONTRACTOR SHALL NOTIFY COLORADO SPRINGS UTILITIES' INSPECTIONS OFFICE (NORTH:668-4396 OR SOUTH: 668-4658) A MINIMUM OF 48 HOURS PRIOR TO THE START OF CONSTRUCTION.

GENERAL:

1.ALL CONSTRUCTION METHODS AND MATERIALS SHALL MEET COLORADO SPRINGS UTILITIES' WATER LINE EXTENSION AND SERVICE STANDARDS (WATER LESS).

2.THE CONTRACTOR SHALL OBTAIN LOCATES PRIOR TO ANY EXCAVATION.

3.COLORADO SPRINGS UTILITIES DOES NOT GUARANTEE THE ACCURACY OF LOCATIONS OF EXISTING PIPELINES, HYDRANTS, VALVES AND SERVICE LINES. IF FIELD CONDITIONS ARE FOUND TO BE DIFFERENT THAN SHOWN ON THE PLANS, THE CONTRACTOR SHALL NOTIFY THE INSPECTOR AND THE ENGINEER OF RECORD IMMEDIATELY.

4.NO TREES OR STRUCTURES ARE PERMITTED WITHIN FIFTEEN FEET (15') OF A WATER MAIN.

5.THE CONTRACTOR IS RESPONSIBLE FOR ANY DAMAGE TO ANY UTILITY FACILITIES AS A RESULT OF HIS ACTIONS. THE CONTRACTOR SHALL MAKE ALL THE REQUIRED REPAIRS IMMEDIATELY TO THE SATISFACTION OF COLORADO SPRINGS UTILITIES.

6.ALL FIELD STAKING SHALL COMPLY WITH THE WATER LESS.

7.THE CONTRACTOR SHALL MAKE THEIR BEST EFFORT TO ENSURE THAT WATER SERVICE TO ADJACENT PROPERTIES IS MAINTAINED DURING CONSTRUCTION.

8.CORROSION PROTECTION MEASURES SHALL COMPLY WITH THE WATER LESS.

9.NO SERVICE TAPS WILL BE ALLOWED UNTIL THE MAIN IS EXTENDED TO THE NEXT MAIN-LINE VALVE.

10.NO SERVICE TAPS SHALL BE MADE UNTIL AUTHORIZATION HAS BEEN GRANTED BY THE COLORADO SPRINGS UTILITIES' INSPECTOR.

11.ALL BENDS SHALL BE FIELD STAKED PRIOR TO CONSTRUCTION AND THE STATIONING ON THE FIELD STAKES SHALL MATCH THE STATIONING ON THE PLANS.

12.FIELD MODIFICATIONS TO A FIRE SERVICE LINE OR FIRE HYDRANT DESIGN OR LOCATION MAY NEED TO BE APPROVED BY THE DESIGN ENGINEER, COLORADO SPRINGS FIRE DEPARTMENT AND COLORADO SPRINGS UTILITIES, AS REQUIRED BY THE INSPECTOR.

13.REUSE OR SALVAGE OF ANY MATERIAL IS LEFT TO THE DISCRETION OF THE COLORADO SPRINGS UTILITIES INSPECTOR.

14.ALL TRENCH BACKFILL AND COMPACTION SHALL BE IN ACCORDANCE WITH SECTION 206 OF THE CITY OF COLORADO SPRINGS STANDARD SPECIFICATIONS MANUAL.

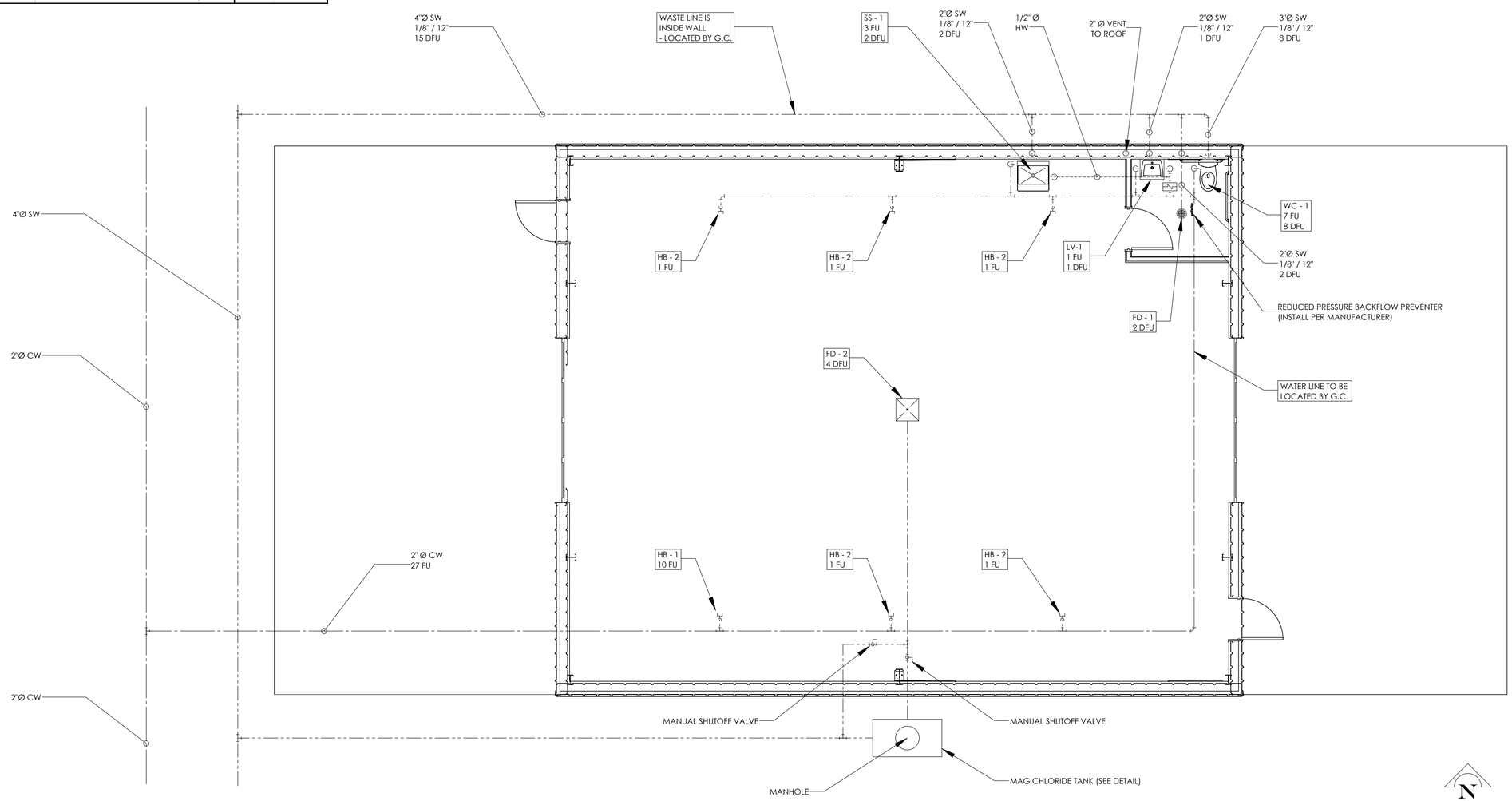

1 / P 1.1 WASH BAY WATER & WASTEWATER DISTRIBUTION PLAN
SCALE: 1/16" = 1'-0"

ENGINEERINGSTUDIO DENVER

ENGINEERING STUDIO DENVER
602 Park Point Dr.
Golden, CO 80401
720.612.7553
dustin@engineeringstudiodenver.com
derek@engineeringstudiodenver.com

TIMBERLINE LANDSCAPING
8110 OPPORTUNITY VIEW
COLORADO SPRINGS, CO 80939

DRAWN BY: DS
CHECKED BY: DR

REVISIONS:

No.	Description	Date
1	50% CD	1/26/18
2	100% CD	2/5/18
3		
4		

ISSUE RECORD:

No.	Description	Date

SHEET CONTENTS:
WASH BAY PLUMBING

COLORADO LICENSED 45420 DUSTIN RANDLE PROFESSIONAL ENGINEER
2/5/18

PROJECT NO.: 9092
DATE: 2/5/2018
DRAWING NO.: P 1.1

8110 OPPORTUNITY VIEW, COLORADO SPRINGS, CO 80939

2/5/2018

2015 IPC FIXTURE UNIT CALCULATIONS - TEMP TRAILERS

FIXTURE:		Quantity	2015 IPC Water FU	2015 IPC Waste FU	TOTAL WATER F.U.	TOTAL WASTE F.U.
Urinal, Wall Flush Valve	Public	0	5.0	4	0	0
Waterless Urinal	Public	0	0.0	0.5	0	0
Prep Sink	Public	0	3.0	2	0	0
3-Comp Sink	Public	0	3.5	2	0	0
Dishwasher	Public	0	1.4	2	0	0
Kitchen Sink w/Grinder	Public	0	1.4	2	0	0
Bar Sink	Public	0	2.0	2	0	0
Hand Sink	Public	0	2.0	2	0	0
Lavatory	Public	2	2.0	1	4	2
Service Sink or Mop Basin	Public	1	3.0	2	3	2
Shower Head	Public	0	4.0	2	0	0
Clothes Washer Residential	Public	0	3.0	2	0	0
Clothes Washer Commercial	Public	0	4.0	3	0	0
Water Closet, 1.6 gpf Flush Valve	Public	2	2.0	4	4	8
Water Closet, 1.6 gpf Gravity Tank	Public	2	5.0	4	10	8
Drinking Fountain	Public	1	0.025	0.5	0.025	0.5
Hose Bibb (3/4")	Public	1	10.0	0	10	0
Hose Bibb, Each Additional	Public	0	1.0	0	0	0
2" Floor Drain	All	2	-	2	-	4
Floor Sink	All	0	-	2	-	0
TOTALS		11			31.03 Water FU	24.5 Waste FU

Estimated Probable Peak Demand Table E103.3(3) =	23.5 GPM
Does not include irrigation demand =	0 GPM
TOTAL GPM =	23.5 GPM
Minimum Tenant CW Pipe Size =	1-1/4" Service

WASTE SIZING:

4 " WASTE

COLORADO SPRINGS UTILITIES

WATER PLAN NOTES

THE CONTRACTOR SHALL NOTIFY COLORADO SPRINGS UTILITIES' INSPECTIONS OFFICE (NORTH:668-4396 OR SOUTH: 668-4658) A MINIMUM OF 48 HOURS PRIOR TO THE START OF CONSTRUCTION.

GENERAL:

1.ALL CONSTRUCTION METHODS AND MATERIALS SHALL MEET COLORADO SPRINGS UTILITIES' WATER LINE EXTENSION AND SERVICE STANDARDS (WATER LESS).

2.THE CONTRACTOR SHALL OBTAIN LOCATES PRIOR TO ANY EXCAVATION.

3.COLORADO SPRINGS UTILITIES DOES NOT GUARANTEE THE ACCURACY OF LOCATIONS OF EXISTING PIPELINES, HYDRANTS, VALVES AND SERVICE LINES. IF FIELD CONDITIONS ARE FOUND TO BE DIFFERENT THAN SHOWN ON THE PLANS, THE CONTRACTOR SHALL NOTIFY THE INSPECTOR AND THE ENGINEER OF RECORD IMMEDIATELY.

4.NO TREES OR STRUCTURES ARE PERMITTED WITHIN FIFTEEN FEET (15') OF A WATER MAIN.

5.THE CONTRACTOR IS RESPONSIBLE FOR ANY DAMAGE TO ANY UTILITY FACILITIES AS A RESULT OF HIS ACTIONS. THE CONTRACTOR SHALL MAKE ALL THE REQUIRED REPAIRS IMMEDIATELY TO THE SATISFACTION OF COLORADO SPRINGS UTILITIES.

6.ALL FIELD STAKING SHALL COMPLY WITH THE WATER LESS.

7.THE CONTRACTOR SHALL MAKE THEIR BEST EFFORT TO ENSURE THAT WATER SERVICE TO ADJACENT PROPERTIES IS MAINTAINED DURING CONSTRUCTION.

8.CORROSION PROTECTION MEASURES SHALL COMPLY WITH THE WATER LESS.

9.NO SERVICE TAPS WILL BE ALLOWED UNTIL THE MAIN IS EXTENDED TO THE NEXT MAIN-LINE VALVE.

10.NO SERVICE TAPS SHALL BE MADE UNTIL AUTHORIZATION HAS BEEN GRANTED BY THE COLORADO SPRINGS UTILITIES' INSPECTOR.

11.ALL BENDS SHALL BE FIELD STAKED PRIOR TO CONSTRUCTION AND THE STATIONING ON THE FIELD STAKES SHALL MATCH THE STATIONING ON THE PLANS.

12.FIELD MODIFICATIONS TO A FIRE SERVICE LINE OR FIRE HYDRANT DESIGN OR LOCATION MAY NEED TO BE APPROVED BY THE DESIGN ENGINEER, COLORADO SPRINGS FIRE DEPARTMENT AND COLORADO SPRINGS UTILITIES, AS REQUIRED BY THE INSPECTOR.

13.REUSE OR SALVAGE OF ANY MATERIAL IS LEFT TO THE DISCRETION OF THE COLORADO SPRINGS UTILITIES INSPECTOR.

14.ALL TRENCH BACKFILL AND COMPACTION SHALL BE IN ACCORDANCE WITH SECTION 206 OF THE CITY OF COLORADO SPRINGS STANDARD SPECIFICATIONS MANUAL.

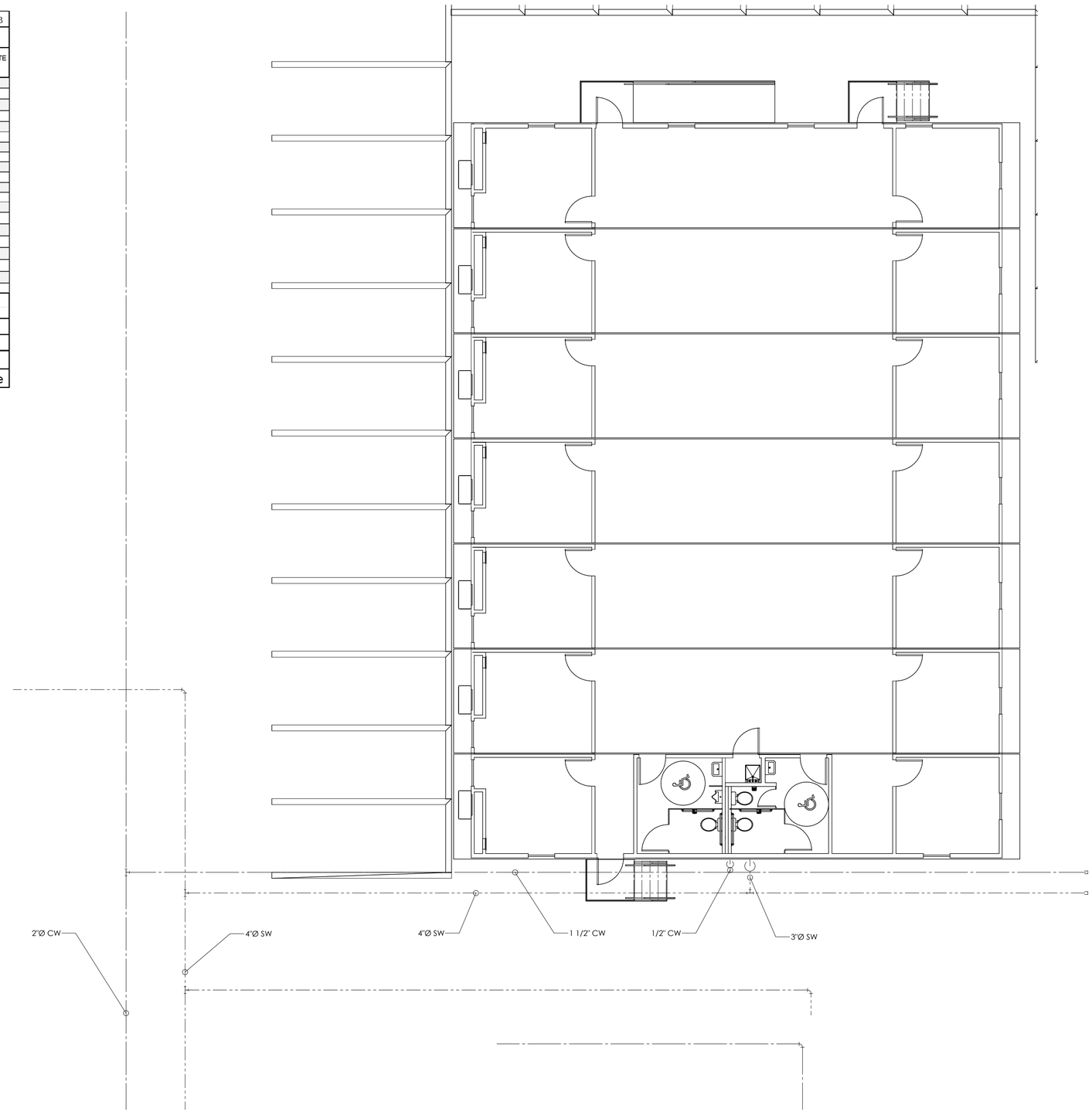

1
P 1.2
SCALE: 1/16" = 1'-0"

ENGINEERINGSTUDIO DENVER

ENGINEERING STUDIO DENVER
602 Park Point Dr.
Golden, CO 80401

720.612.7553
dustin@engineeringstudiodenver.com
derek@engineeringstudiodenver.com

TIMBERLINE LANDSCAPING
8110 OPPORTUNITY VIEW
COLORADO SPRINGS, CO 80939

DRAWN BY: DS
CHECKED BY: DR

REVISIONS:

No.	Description	Date
1	50% CD	1/26/18
2	100% CD	2/5/18
3		
4		

ISSUE RECORD:

No.	Description	Date

SHEET CONTENTS:

TEMP TRAILERS PLUMBING

COLORADO LICENSED
DUSTIN W. RANDLE
45402
PROFESSIONAL ENGINEER
2/5/18

PROJECT NO.: 9092
DATE: 2/5/2018

DRAWING NO.:
P 1.2

FOUNDATION AND STRUCTURAL NOTES

1. FOUNDATION DESIGNED BASED ON SITE MEASUREMENT AND CLIENT SPECIFICATION.
2. FOOTING DESIGNED FOR A MAX ALLOWABLE BEARING PRESSURE: 2,000 PSF FOR SHALLOW FOOTINGS. LATERAL SOIL BEARING PRESSURE: 150 PSF.
3. FOUNDATION EXCAVATION MUST BE OBSERVED BY GEO-TECHNICAL ENGINEER. IF SOIL, BEDROCK OR GROUND WATER CONDITIONS ENCOUNTERED DIFFER FROM SOILS REPORT, SUPPLEMENTAL RECOMMENDATIONS WILL BE REQUIRED.
4. CONCRETE DESIGN PER ACI-318.99 MINIMUM COMPRESSION STRENGTH, 3,000 PSI @ 28 DAYS, FIRST SUBFLOOR TO BE IN PLACE OR FOUNDATION WALLS ADEQUATELY BRACED BEFORE BACKFILL, USE TYPE-II CEMENT.
5. VERIFY EXCAVATED EXISTING SOILS CONDITIONS WITH SOILS ENGINEER PRIOR TO FORMING FOOTINGS, ALL FOOTINGS TO BE MIN 36" BELOW FINISH GRADE, SEE SOILS REPORT.
6. PERIMETER DRAIN MUST BE INSTALLED AROUND FOOTING IN ACCORDANCE WITH IRC 2009.
7. TOP OF FOUNDATION WALL MUST BE A MINIMUM OF 6" ABOVE FINISHED GRADE. GRADE TO SLOPE IN ACCORDANCE WITH MINIMUM RECOMMENDATIONS OF GEO-TECHNICAL ENGINEER
8.STEEL REINFORCING A-615 GRADE 60
9.STRUCTURAL STEEL DESIGN PER AISC 9TH EDITION, A-36, T5 COLUMNS A-500 GRADE B (AISC 9TH EDITION)
10.DESIGN FLOOR FOR MIN 55 PSF TOTAL LOAD (IRC TABLE R301.5). (STRUCTURAL MEMBERS DESIGNED TO 65PSF)
11.PROVIDE TEMPORARY BRACING TO WALLS AND ROOF AS REQUIRED DURING CONSTRUCTION
12. WOOD: DESIGN PER AITC, ALL DIMENSIONAL LUMBER TO BE SOUTHERN PINE Fb = 875 PSI. ALL SILL PLATES AND SLEEPERS TO BE TREATED WOOD.
13: ALL WOOD IN DIRECT CONTACT WITH EARTH TO BE PRESSURE TREATED.
14. ALL CONTINUOUS RIMS ARE TIMBERSTRAND OR EQUAL.
15. ALL SILLS AND SLEEPERS TO BE ANCHORED WITH 1/2" X 10" LONG ANCHOR BOLT SPACED NO MORE THAN 4'-0" O.C, 12" FROM CORNERS AND MINIMUM 2 ANCHOR BOLTS PER PLATE. AS ACCORDING TO R.403.1.6 OF IRC 2009.
16. VAPOR BARRIERS REQUIRED UNDER FLOOR SLAB AND EXTERIOR OF FOUNDATION WALLS
17. ALL EXT. WALLS SATISFY BRACING REQUIREMENTS BY HAVING MIN. 1/2" SHEATHING. ALL INT. WALLS SATISFY BRACING REQUIREMENTS BY HAVING MIN. 1/2" GYP. BOARD SHEATHING.
18. ALL FLUSH BEAMS SHALL BE PLACED ON STEEL BEARING PLATES, ADJUST TO HEIGHT W/STEEL SHIMS OR STEEL TUBE BLOCKING AS REQUIRED.
19. FLOOR JOIST SUPPLIER TO PROVIDE SHOP AND LAYOUT DRAWINGS, AND INDICATE HANGAR TYPES AND LOCATION, FOR REVIEW BY ARCHITECT AND ENGINEER PRIOR TO FABRICATION
20. ALL FOUNDATION WALLS ARE LOAD BEARING.
21. ALL DIMENSIONS SHOWN ARE FIELD VERIFIED BY VERADYN. ALL PLANS TO BE CROSS CHECKED WITH ARCHITECTURAL PLANS, ANY DISCREPANCIES TO BE IMMEDIATELY BROUGHT TO THE ATTENTION OF THE ARCHITECT, ENGINEER AND BUILDER.
22. FOUNDATION FOOTING AND WALL STEEL INSPECTIONS REQUIRED BY VERADYN OR LOCAL BUILDING AUTHORITY.
23. ANY DISCREPANCIES WITH PLANS ENCOUNTERED ON SITE TO BE BROUGHT IMMEDIATELY
TO ATTENTION OF VERADYN ENGINEERING.
24. ALL ROOF DRAINS MUST DRAIN A MINIMUM OF 10' FROM STRUCTURE. ANY DEVIATION MUST BE APPROVED BY STRUCTURAL ENGINEER.
25. ALL CODES COMPLIANT WITH 2015 IBC

CONCRETE AND REINFORCEMENT NOTES

1. CONCRETE, CONCRETE PLACEMENT, REBAR FABRICATION AND REBAR PLACEMENT TO CONFORM TO APPLICABLE PROVISIONS OF ACI-318 AND ACI 322-08.
2. ALL CONCRETE TO BE MINIMUM OF 3,000 PSI AFTER A PERIOD OF 28 DAYS. USE TYPE II CEMENT.
3. MAXIMUM SLUMP TO BE 5"
4. ALL EXPANSION JOINTS TO BE A MINIMUM OF 1/2". AN EXPANSION JOINT MUST BE PRESENT EVERY 15' AND AT ALL COINCIDING INSTANCES OF FLOOR SLAB AND FOUNDATION WALLS
5. ALL CONCRETE TO BE PROTECTED FROM FREEZING FOR A MINIMUM OF 36 HOURS.
6. ALL REBAR MUST BE 2" FROM OUTSIDE SURFACE OF CONCRETE UNLESS OTHERWISE SPECIFIED.
7. ALL VERTICAL REBAR TO HAVE 3" HOOK AT TERMINATION IN FOOTING (SEE WALL SECTIONS FOR DETAILING). HORIZONTAL REBAR IN FOOTING (PERPENDICULAR TO STRING FOOTING) TO BE HOOKED. CONTINUOUS HORIZONTAL REBAR (PARALELL TO STRING FOOTING) DOES NOT REQUIRE HOOKING
8. DEFORMED BARS TO COMPLY WITH ASTM A615 AND WELDED WIRE FABRIC TO COMPLY WITH ASTM A185
9. REINFORCING TO BE KEPT CLEAN OF DIRT, OIL, SCALE AND RUST. FORMS TO BE OILED PRIOR TO PLACEMENT OF REINFORCING STEEL
10. LAP SPLICES TO BE A MINIMUM OF 36 BAR DIAMETERS ALL BARS TO BE CONTINUOUS AROUND ALL CORNERS AND STEP DOWNS.
11. ALL CONCRETE SLABS TO BE ISOLATED FROM FOUNDATION WALLS, STEEL COLUMNS AND UTILITY LINES.
12. ALL INTERIOR NON BEARING PARTITIONS AT BASEMENT LEVEL SHALL BE INSTALLED AS FLOATING WALLS.
13. BUILDER AND OWNER MUST BE AWARE OF THE RISK OF SLAB ON GRADE CONSTRUCTION AND HAVE OPTED FOR SLAB ON GRADE, SLAB MAY MOVE OR CRACK. TO MINIMIZE MOVEMENT ALL SOILS RECOMMENDATIONS MUST BE FOLLOWED. VERADYN LLC ASSUMES NO LIABILITY FOR DAMAGE TO ANY PORTION OF THE SLAB ON GRADE OR ANY FUTURE FINISHED SPACES CONSTRUCTED ON SLAB.
14. WATERPROOFING SHALL BE APPLIED FROM THE BOTTOM OF THE WALL TO NOT LESS THAN 12" ABOVE THE MAXIMUM ELEVATION OF THE GROUND-WATER TABLE PER IBC 1805.3.2. DAMPPROOFING SHALL EXTEND FROM WATERPROOFING LEVEL TO TOP OF FOUNDATION. MATERIALS TO BE COMPLIANT WITH SECTION 1805 OF IBC 2012.
13. ALL CODES COMPLIANT WITH 2015 IBC.

STRUCTURAL STEEL

1.STEEL REINFORCING A-615 GRADE 60. ANGLES AND MISCELLANEOUS SHAPES SHALL CONFORM TO ASTM A36.
2.STRUCTURAL STEEL DESIGN PER AISC 9TH EDITION, A-36, T5 COLUMNS A-500 GRADE B (AISC 9TH EDITION).
3.BEAMS TO CONFORM TO ASTM A-992 (Fy=50ksi). POSTS AND COLUMNS TO CONFORM TO ASTM A-53.
4. ALL BEAMS SHALL BE GROUTED SOLID INTO BEAM POCKETS WITH NON-SHRINK GROUT.
5. MINIMUM BEARING OF BEAMS IN POCKETS SHALL BE 3".
6. POSTS ARE SPECIFIED WITH NOMINAL DIMENSIONS AND ARE TO BE INSTALLED ACCORDING TO MANUFACTURERS SPECIFICATIONS INCLUDING BOLT AND BRACKET SIZING.
7. ALL ADJUSTABLE POSTS TO HAVE A MAXIMUM ADJUSTMENT OF 3" AND A MAXIMUM OF 2" SCREW EXTENSION AT TIME OF INSTALLATION.
8. CAST IN PLACE ANCHOR BOLTS TO CONFORM TO ASTM A-307
9. ALL CODES COMPLIANT WITH 2015 IBC.

VERIFY ALL DIMENSIONS ON SITE

DIMENSIONS BASED ON STEEL BUILDING DESIGN DRAWINGS.
PRIOR TO FORMING/POURING DIMENSIONS MUST BE VERIFIED AGAINST VARCO PRUDEN PRINTS

SHEET INDEX

EngineeringStudio Denver

ENGINEERING STUDIO DENVER
602 Park Point Dr.
Golden, CO 80401

720.612.7553
dustin@engineeringstudiodenver.com
derek@engineeringstudiodenver.com

TIMBERLINE LANDSCAPING

8110 OPPORTUNITY VIEW
COLORADO SPRINGS, CO 80939

DRAWN BY: DS
CHECKED BY: DR

REVISIONS:

No.	Description	Date
	50% CD	1/26/18
	100% CD	2/5/18

ISSUE RECORD:

No.	Description	Date

SHEET CONTENTS:

STRUCTURAL NOTES/SCHEDULE

COLORADO LICENSED
DUSTIN RANDLE
46487
PROFESSIONAL ENGINEER
2/5/18

PROJECT NO.: 9092
DATE: 2/5/2018

DRAWING NO.:
S 0.0

VERIFY ALL DIMENSIONS ON SITE

DIMENSIONS BASED ON STEEL BUILDING DESIGN DRAWINGS.
PRIOR TO FORMING/POURING DIMENSIONS MUST BE VERIFIED AGAINST VARCO PRUDEN PRINTS

NOTES

1. SEE ARCHITECTURAL SET FOR BOLLARD LOCATIONS AND DETAIL
2. INSTALL UFER BAR IN FOUNDATION PER NEC CODE SECTION 250.50

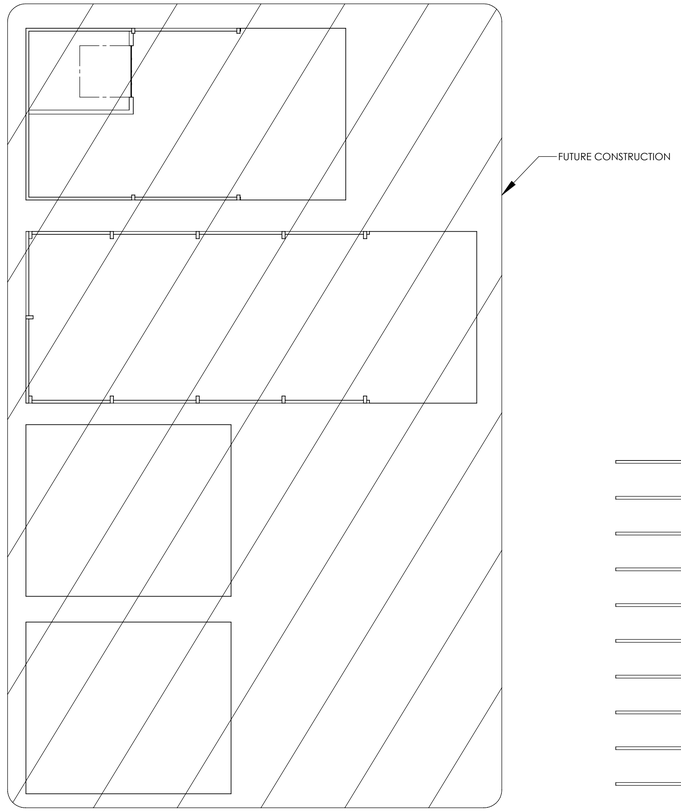

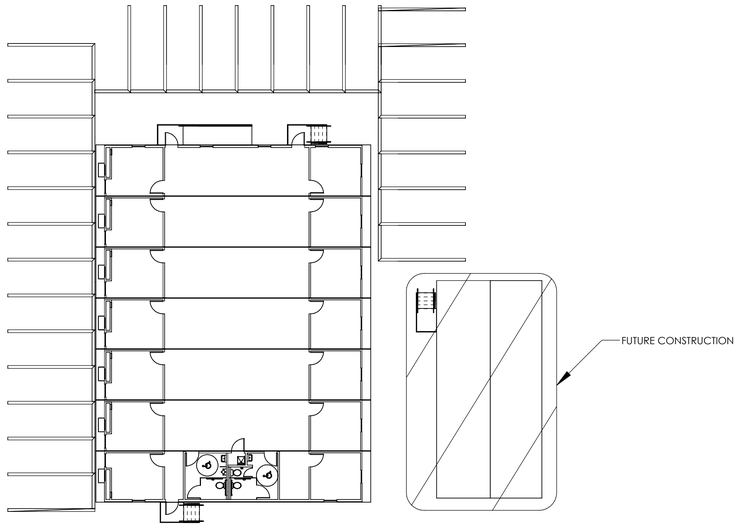

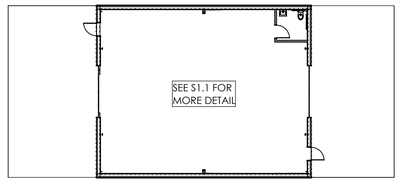

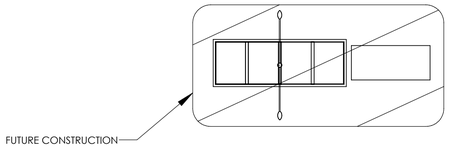

1
S 1.0
STRUCTURAL SITE PLAN
SCALE: 1/16" = 1'-0"

N

ENGINEERINGSTUDIO DENVER

ENGINEERING STUDIO DENVER
602 Park Point Dr.
Golden, CO 80401

720.612.7553
dustin@engineeringstudiodenver.com
derek@engineeringstudiodenver.com

TIMBERLINE LANDSCAPING

8110 OPPORTUNITY VIEW
COLORADO SPRINGS, CO 80939

DRAWN BY: DS
CHECKED BY: DR

REVISIONS:

No.	Description	Date
1	50% CD	1/26/18
2	100% CD	2/5/18
3		
4		

ISSUE RECORD:

No.	Description	Date

SHEET CONTENTS:

SITE STRUCTURAL PLAN

COLORADO LICENSED
DUSTIN RANDLE
45407
PROFESSIONAL ENGINEER
2/5/18

PROJECT NO.: 9092
DATE: 2/5/2018

DRAWING NO.:
S 1.0

BOM TABLE		
ITEM NO.	DESCRIPTION	QTY.
1	FOUNDATION SLAB	1
2	3' X 3' CENTAR PAD REBAR	6
3	3' X 3' CORNER REBAR	4
4	TURNDOWN REBAR	70
5	PERIMETER HOOP	2

VERIFY ALL DIMENSIONS ON SITE

DIMENSIONS BASED ON STEEL BUILDING DESIGN DRAWINGS.
PRIOR TO FORMING/POURING DIMENSIONS MUST BE VERIFIED AGAINST VARCO PRUDEN PRINTS

FRAMING NOTES

1. EPOXY ANCHOR BOLTS EVERY 12" O.C.
2. ALL WALLS TO BE FRAMED IN ACCORDANCE WITH IBC TABLE 1615.4
3. ALL CODES COMPLIANT WITH 2015 IBC.

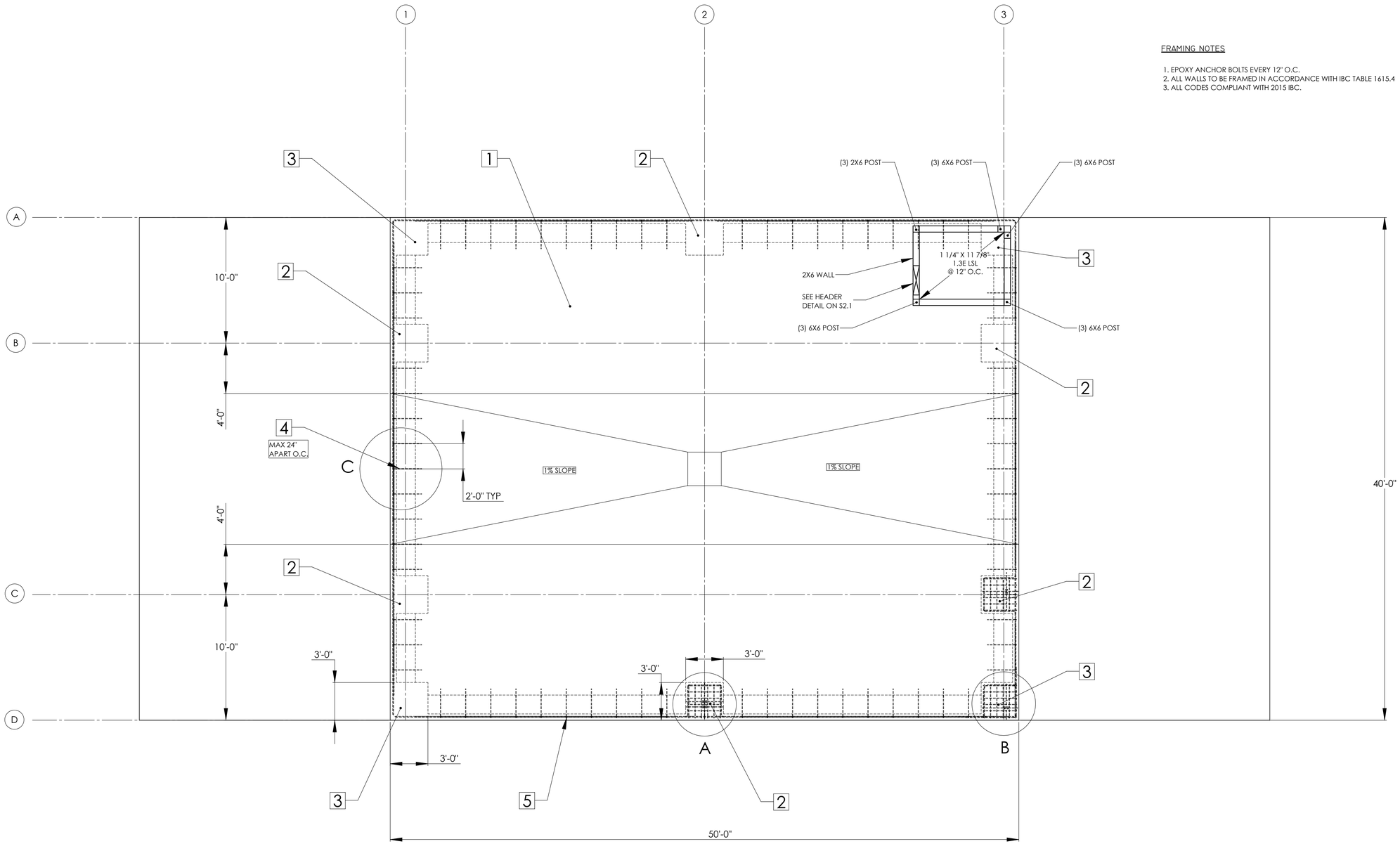

1 / S 1.1 WASH BAY FOUNDATION & FRAMING PLAN

SCALE: NOT TO SCALE

N

ENGINEERINGSTUDIO DENVER

ENGINEERING STUDIO DENVER
602 Park Point Dr.
Golden, CO 80401

720.612.7553
dustin@engineeringstudiodenver.com
derek@engineeringstudiodenver.com

TIMBERLINE LANDSCAPING

8110 OPPORTUNITY VIEW
COLORADO SPRINGS, CO 80939

DRAWN BY: DS
CHECKED BY: DR

REVISIONS:

No.	Description	Date
1	50% CD	1/26/18
2	100% CD	2/5/18
3		
4		

ISSUE RECORD:

No.	Description	Date

SHEET CONTENTS:

WASH BAY FOUNDATION & FRAMING PLAN

COLORADO LICENSED
DUSTIN RANDOLPH
PROFESSIONAL ENGINEER
2/5/18

PROJECT NO.: 9092
DATE: 2/5/2018

DRAWING NO.:

S 1.1

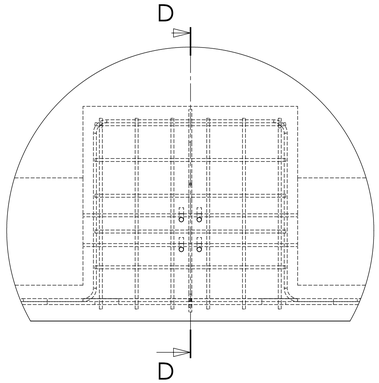

1 / S 2.0 DETAIL A: CENTER PAD REBAR TOP VIEW

SCALE: 1:12

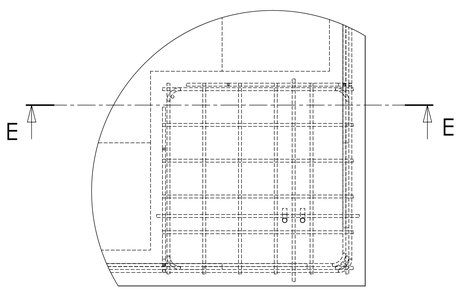

2 / S 2.0 DETAIL B: CORNER REBAR TOP VIEW

SCALE: 1:12

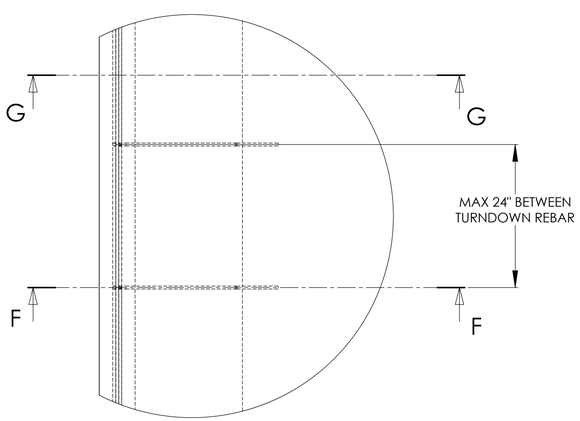

3 / S 2.0 DETAIL C: TURNDOWN REBAR TOP VIEW

SCALE: 1:12

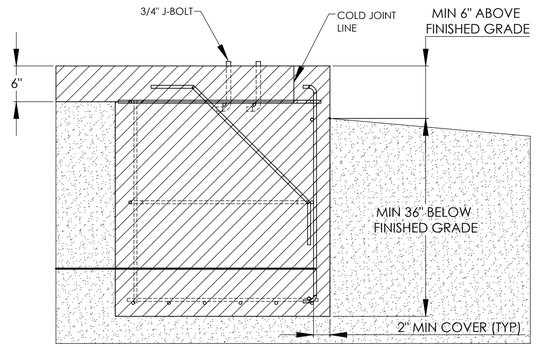

SECTION D-D
SCALE 1 : 12

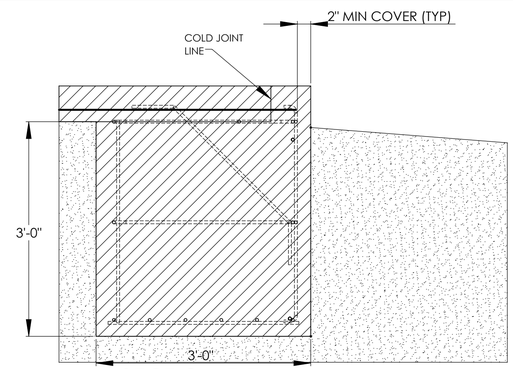

SECTION E-E
SCALE 1 : 12

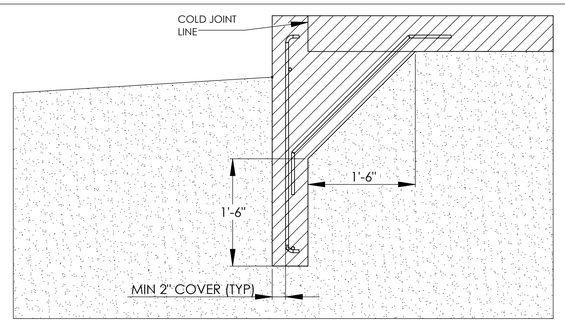

SECTION F-F
SCALE 1 : 12

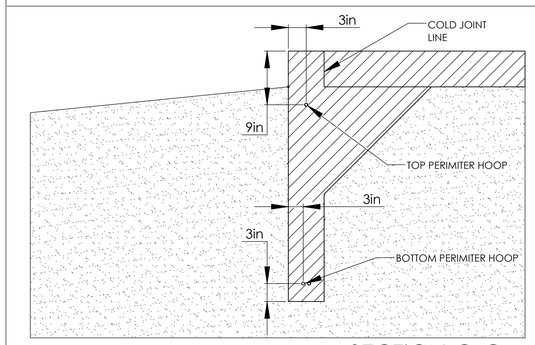

SECTION G-G
SCALE 1 : 12

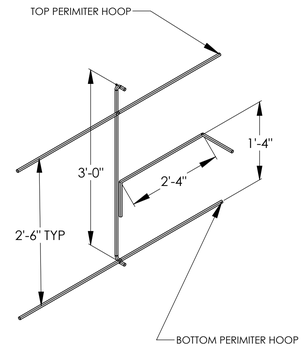

TURNDOWN REBAR ISO VIEW

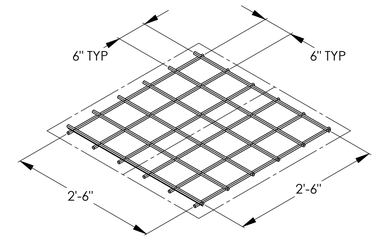

3' X 3' FOOTING GRID ISO VIEW

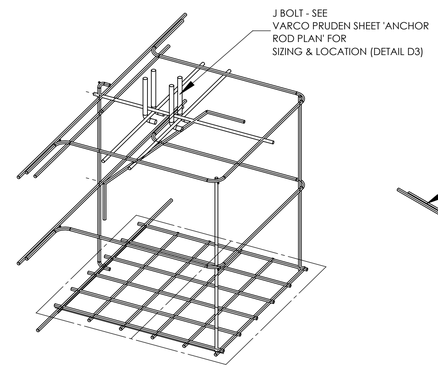

3' X 3' CENTER PAD REBAR ISO VIEW

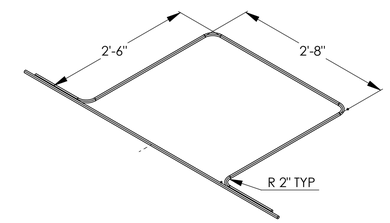

3' X 3' FOOTING HOOP ISO VIEW

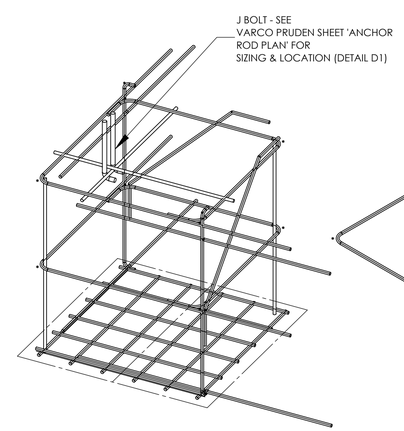

3' X 3' CORNER REBAR ISO VIEW

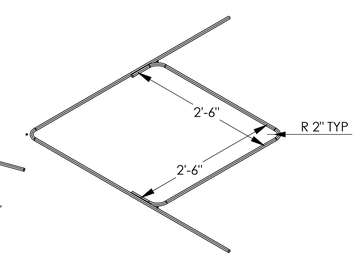

3' X 3' CORNER HOOP ISO VIEW

ENGINEERINGSTUDIO DENVER

ENGINEERING STUDIO DENVER
602 Park Point Dr.
Golden, CO 80401

720.612.7553
dustin@engineeringstudiodenver.com
derek@engineeringstudiodenver.com

TIMBERLINE LANDSCAPING

8110 OPPORTUNITY VIEW
COLORADO SPRINGS, CO 80939

DRAWN BY: DS
CHECKED BY: DR

REVISIONS:

No.	Description	Date
1	50% CD	1/26/18
2	100% CD	2/5/18
3		
4		

ISSUE RECORD:

No.	Description	Date

SHEET CONTENTS:

FOUNDATION DETAILS

COLORADO LICENSED
DUSTIN RANDLE
PROFESSIONAL ENGINEER
2/5/18

PROJECT NO.: 9092

DATE: 2/5/2018

DRAWING NO.:

S 2.0

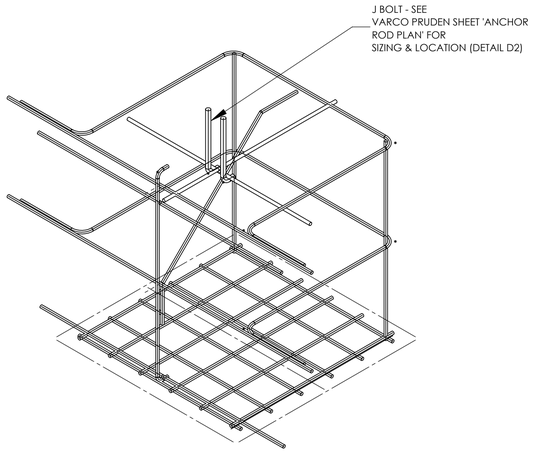

3' X 3' SIDE REBAR ISO VIEW

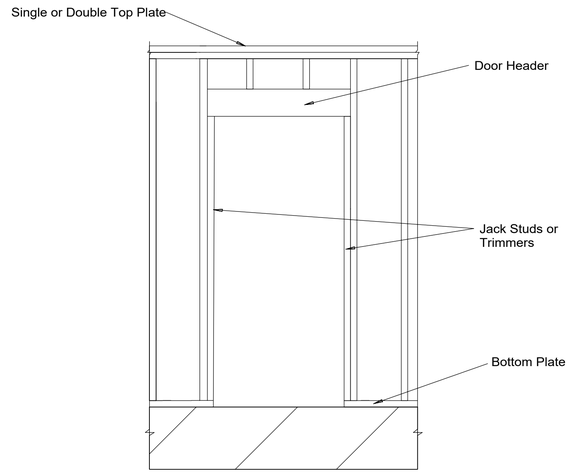

1
S 2.1

TYP DOOR HEADER DETAIL

SCALE: 1:12

ENGINEERINGSTUDIO
DENVER

ENGINEERING STUDIO DENVER
602 Park Point Dr.
Golden, CO 80401

720.612.7553
dustin@engineeringstudiodenver.com
derek@engineeringstudiodenver.com

TIMBERLINE LANDSCAPING

8110 OPPORTUNITY VIEW
COLORADO SPRINGS, CO 80939

DRAWN BY: DS
CHECKED BY: DR

REVISIONS:

No.	Description	Date
△	50% CD	1/26/18
△	100% CD	2/5/18
△		
△		

ISSUE RECORD:

No.	Description	Date

SHEET CONTENTS:

FOUNDATION &
FRAMING DETAILS

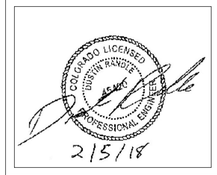

PROJECT NO.: 9092
DATE: 2/5/2018

DRAWING NO.:
S 2.1

ELECTRICAL SPECIFICATIONS (DIV. 26000)

I. GENERAL REQUIREMENTS

A. SCOPE OF WORK:

1. THE WORK COVERED BY THESE DRAWINGS AND SPECIFICATIONS INCLUDES THE LABOR, MATERIALS, TRANSPORTATION, TOOLS, AND APPLIANCES REQUIRED FOR THE INSTALLATION OF THE COMPLETE AND WORKING SYSTEMS DESCRIBED AND REQUIRED BY THE CONTRACT. WORK PERFORMED UNDER THIS SECTION SHALL BE IN ACCORDANCE WITH THE DRAWINGS AND SPECIFICATIONS AND ARE SUBJECT TO THE TERMS AND CONDITIONS OF THE CONTRACT.

2. THE APPROXIMATE LOCATION OF ELECTRICAL ITEMS IS INDICATED ON THE ELECTRICAL DRAWINGS. THESE DRAWINGS ARE SCHEMATIC AND ARE NOT INTENDED TO GIVE COMPLETE AND ACCURATE DETAILS OF THE LOCATION OF OUTLETS, APPARATUS AND EQUIPMENT. EXACT LOCATIONS ARE TO BE DETERMINED BY ACTUAL MEASUREMENTS AT THE BUILDING, AND WILL BE SUBJECT TO THE APPROVAL OF THE ENGINEER, AND HE RESERVES THE RIGHT TO MAKE ANY REASONABLE CHANGES IN THE LOCATIONS WITHOUT ADDITIONAL COST TO THE OWNER.

B. CODES AND STANDARDS:

1. WORK SHALL COMPLY WITH THE 2017 NATIONAL ELECTRICAL CODE, THE NATIONAL FIRE CODES (PUBLISHED BY NATIONAL FIRE PROTECTION ASSOCIATION), LOCAL ELECTRICAL CODES AND ORDINANCES, AND THE TERMS AND CONDITIONS OF SERVICES OF THE ELECTRICAL UTILITY AND OTHER AUTHORITIES THAT MAY HAVE LAWFUL JURISDICTION. NONE OF THE TERMS OR PROVISIONS OF THIS SPECIFICATION SHALL BE CONSTRUED AS WAIVING ANY OF THE RULES, REGULATIONS, OR REQUIREMENTS OF THESE AUTHORITIES.

2. MATERIALS, IN GENERAL, SHALL CONFORM TO THE 2017 NATIONAL ELECTRICAL CODE REQUIREMENTS AND SHALL BE LISTED BY THE UNDERWRITERS LABORATORIES AND SHALL BEAR THE UL LABEL WHERE LABELING SERVICE IS AVAILABLE.

C. COORDINATION:

1. COORDINATE THE WORK WITH THE BUILDING STRUCTURE AND WITH THE WORK OF OTHERS TRADES. VISIT THE PREMISES AND EXAMINE THE EXISTING SITE CONDITIONS, DETAILS OF THE WORK AND WORKING CONDITIONS, AND VERIFY DIMENSIONS IN THE FIELD. ADVISE THE ARCHITECT OF ANY DISCREPANCY PRIOR TO BIDDING. THE SUBMISSION OF BIDS SHALL BE DEEMED EVIDENCE OF THE CONTRACTOR'S SITE VISIT, THE COORDINATION OF EXISTING CONDITIONS, AND THE INCLUSION OF ALL CONSIDERATION FOR EXISTING CONDITIONS.

D. DRAWINGS AND SPECIFICATIONS

1. THE DRAWINGS AND THESE SPECIFICATIONS ARE COMPLEMENTARY TO EACH OTHER, AND WHAT IS REQUIRED BY ONE SHALL BE AS BINDING AS IF REQUIRED BY BOTH. PHASE, NEUTRAL, AND SWITCH LEG INDICATIONS ARE SHOWN ONLY WHERE IT IS CONSIDERED THAT CLARIFICATION IS REQUIRED AND TO INDICATE TYPICAL WIRING METHODS REQUIRED.

2. IF ANY DEPARTURES FROM THE DRAWINGS ARE DEEMED NECESSARY BY THE CONTRACTOR, DETAILS OF SUCH DEPARTURES AND THE REASONS THEREFORE SHALL BE SUBMITTED TO THE ARCHITECT FOR REVIEW. NO DEPARTURES SHALL BE MADE WITHOUT PRIOR WRITTEN ACCEPTANCE OF THE ARCHITECT.

3. SHOULD THE DRAWINGS OR SPECIFICATIONS DISAGREE IN THEMSELVES OR WITH THEIR COUNTERPART, THE BETTER QUALITY OR GREATER QUANTITY OF WORK OR MATERIALS SHALL BE ESTIMATED UPON, AND UNLESS OTHERWISE DIRECTED BY THE ARCHITECT IN WRITING, SHALL BE PERFORMED OR FURNISHED. IN CASE THE SPECIFICATIONS SHOULD NOT FULLY AGREE WITH THE SCHEDULES, THE LATTER SHALL GOVERN. FIGURES INDICATED ON DRAWINGS GOVERN SCALE MEASUREMENTS AND LARGE SCALE DETAILS GOVERN SMALL SCALE DRAWINGS. IN CASE OF DISAGREEMENT BETWEEN SPECIFICATIONS AND DRAWINGS, SEE DIVISION I OF THESE SPECIFICATIONS FOR CLARIFICATION.

4. ITEMS SPECIFICALLY MENTIONED IN THE SPECIFICATIONS BUT NOT SHOWN ON THE DRAWINGS AND/OR ITEMS SHOWN ON THE DRAWINGS BUT NOT SPECIFICALLY MENTIONED IN THE SPECIFICATIONS SHALL BE INSTALLED BY THE CONTRACTOR UNDER THE APPROPRIATE SECTION OF WORK AS IF THEY WERE BOTH SPECIFIED AND SHOWN.

E. SPACE AND EQUIPMENT ARRANGEMENT

1. EQUIPMENT AND COMPONENTS SHALL BE INSTALLED IN A MANNER TO PERMIT ACCESS TO PARTS REQUIRING SERVICE. ELECTRICAL EQUIPMENT SHALL BE INSTALLED IN SUCH A MANNER AS TO ALLOW REMOVAL FOR SERVICE WITHOUT DISASSEMBLY OF ADJACENT EQUIPMENT.

2. LARGE EQUIPMENT OR APPARATUS WHICH IS TO BE INSTALLED IN THE BUILDING, AND WHICH IS TOO LARGE TO PERMIT ACCESS THROUGH STAIRWAYS, DOORWAYS, OR SHAFTS SHALL BE BROUGHT TO THE JOB AND PLACED IN THE SPACE BEFORE THE ENCLOSING STRUCTURE IS COMPLETED. FOLLOWING PLACEMENT IN THE SPACE, SUCH APPARATUS SHALL BE THOROUGHLY PROTECTED FROM DAMAGE.

3. ELECTRICAL EQUIPMENT SHALL HAVE WORKING CLEARANCES AS REQUIRED BY THE LATEST VERSION OF THE NATIONAL ELECTRICAL CODE.

F, SUBMITTALS:

1. PROVIDE SIX COPIES OF SUBMITTAL TO THE ARCHITECT/OWNER FOR REVIEW OF EACH OF THE FOLLOWING GROUPS OF ITEMS OR EQUIPMENT:
   a. ELECTRICAL DISTRIBUTION EQUIPMENT
   b. WIRING DEVICES
   c. LIGHTING FIXTURES

G. STORAGE AT SITE:

1. THE CONTRACTOR SHALL NOT RECEIVE MATERIAL OR EQUIPMENT AT THE JOB SITE UNTIL READY FOR INSTALLATION OR UNTIL THERE IS SUITABLE SPACE PROVIDED TO PROPERLY PROTECT EQUIPMENT FROM RUST, WEATHER, HUMIDITY, DUST, OR PHYSICAL DAMAGE.

H. CUTTING AND PATCHING:

1. WHERE IT IS NECESSARY TO CUT THROUGH WALLS, FLOORS, OR CEILINGS TO PERMIT INSTALLATION OF WORK UNDER THIS SECTION OF THE CONTRACT, OR TO REPAIR ANY DEFECTS THAT MAY APPEAR, UP TO THE EXPIRATION OF GUARANTEE PERIOD, SUCH CUTTING SHALL BE DONE UNDER THE SUPERVISION OF THE OWNER. THE CONTRACTOR SHALL NOT BE PERMITTED TO CUT OR MODIFY ANY STRUCTURAL MEMBERS WITHOUT THE WRITTEN PERMISSION OF THE OWNER.

I. CONDUIT SLEEVES:

1. WHERE CONDUITS PASS THROUGH WALLS OR FLOORS NOT ON FILL, GALVANIZED SHEET METAL SLEEVES SHALL BE PROVIDED AND SHALL BE SEALED TO PREVENT AIR AND NOISE TRANSMISSION. IN WALLS, THEY SHALL BE FLUSH WITH EACH FINISHED SURFACE. IN PIPE CHASES, THEY SHALL EXTEND 1–1/2 INCHES ABOVE FLOOR SLAB AND BE CEMENTED IN A WATER TIGHT MANNER. SIZE OF THESE SLEEVES SHALL BE AT LEAST 1/2 INCH GREATER THAN OUTSIDE DIAMETER OF THE CONDUIT.

2. FOR CONDUITS PASSING THROUGH OUTSIDE WALLS, PROVIDE AND INSTALL GALVANIZED STEEL SLEEVES HAVING AN INSIDE DIAMETER AT LEAST 4 INCHES GREATER THAN THE OUTSIDE DIAMETER OF CONTAINED CONDUIT. WHERE THESE OCCUR IN WALLS HAVING A WATERPROOF COATING APPLIED, THE SLEEVES SHALL HAVE WELDED FLANGES TO BUILD INTO WATERPROOFING. WHEN CONDUITS ARE INSTALLED, THE ANNULAR SPACE BETWEEN PIPE AND SLEEVE SHALL BE EFFECTIVELY SEALED, USING SHREDDED LEAD HAMMERED IN PLACE OR AN APPROVED MASTIC SEALER.

J. HOUSEKEEPING PADS:

1. EACH PIECE OF FLOOR MOUNTED EQUIPMENT SHALL BE SET ON A STRUCTURAL GRADE CONCRETE BASE. BASES SHALL BE NOT LESS THAN 4" HIGH AND SHALL BE PINNED TO THE FLOOR OR POURED MONOLITHIC.

K. ELECTRICAL WIRING OF MOTORS AND EQUIPMENT:

1. THE AIR CONDITIONING AND PLUMBING CONTRACTORS WILL SET IN PLACE, READY FOR CONNECTION, ALL MOTORS TO BE PROVIDED UNDER THEIR CONTRACT. THE AIR CONDITIONING AND PLUMBING CONTRACTORS WILL FURNISH AND DELIVER ALL AUTOMATICALLY CONTROLLED STARTER/CONTACTORS EITHER SEPARATELY MOUNTED OR FACTORY MOUNTED AND WIRED FOR ANY MOTORS WHICH THEY FURNISH. THE MECHANICAL CONTRACTOR SHALL BE RESPONSIBLE FOR THE COMPLETE INSTALLATION OF ALL AUTOMATIC TEMPERATURE CONTROL SYSTEMS, INCLUDING WIRE, CONDUIT, AND INTERLOCKING CONNECTIONS.

2, THE ELECTRICAL CONTRACTOR SHALL CONNECT ALL MOTORS AND SHALL SET IN PLACE ALL CONTROL DEVICES, FURNISHING SUPPORTS IF AND AS NECESSARY, AND SHALL FURNISH AND INSTALL ALL INTERCONNECTING LINE VOLTAGE WIRING AND MAKE ALL CONNECTIONS READY FOR OPERATION BETWEEN MOTORS, STARTERS, AND DISCONNECT SWITCHES, AS REQUIRED. THE ELECTRICAL CONTRACTOR SHALL FURNISH AND INSTALL ALL MOTOR CONTROL CENTERS, INCLUDING BREAKERS, STARTERS, ETC. THIS CONTRACTOR SHALL REFER TO THE AIR CONDITIONING AND PLUMBING SPECIFICATIONS FOR THIS SCOPE OF THE CONNECTIONS TO EQUIPMENT FURNISHED UNDER THESE CONTRACTS.

L. EXISTING FACILITIES:

1. THE CONTRACTOR SHALL BE RESPONSIBLE FOR LOSS OR DAMAGE TO THE EXISTING FACILITIES AND SHALL BE RESPONSIBLE FOR REPAIRING OR REPLACING SUCH LOSS OR DAMAGE. THE CONTRACTOR SHALL SEND PROPER NOTICES AND RECEIVE WRITTEN PERMISSION FROM THE OWNER TO ENTER EXISTING AREAS. BEFORE BEGINNING WORK IN EXISTING AREAS, THE CONTRACTOR SHALL MAKE NECESSARY ARRANGEMENTS AND PERFORM OTHER SERVICES REQUIRED FOR THE CARE, PROTECTION, AND IN-SERVICE MAINTENANCE OF ALL ELECTRICAL, COMMUNICATION, PLUMBING, HEATING, AIR CONDITIONING, AND VENTILATING SERVICES FOR NEW AND EXISTING FACILITIES. THE CONTRACTOR SHALL ERECT TEMPORARY BARRICADES WITH NECESSARY SAFETY DEVICES TO PROTECT PERSONNEL FROM INJURY, REMOVING ALL SUCH TEMPORARY PROTECTION UPON COMPLETION OF THE WORK.

M. OUTAGES:

1. OUTAGES OF SERVICES AS REQUIRED BY THE PROJECT WILL BE PERMITTED, BUT ONLY AT A TIME APPROVED BY THE OWNER. THE CONTRACTOR SHALL NOTIFY THE OWNER IN WRITING TWO (2) WEEKS IN ADVANCE OF THE REQUESTED OUTAGE IN ORDER TO SCHEDULE REQUIRED OUTAGES. NO OUTAGES SHALL BE TAKEN UNLESS WRITTEN APPROVAL HAS FIRST BEEN RECEIVED FROM THE OWNER. THE TIME ALLOWED FOR OUTAGES WILL NOT BE DURING NORMAL WORKING HOURS UNLESS OTHERWISE APPROVED BY THE OWNER. ALL COSTS OF OUTAGES, INCLUDING OVERTIME CHARGES, SHALL BE INCLUDED IN THE CONTRACT AMOUNT.

N. LABELING:

1. DISCONNECT SWITCHES, SWITCHGEAR, MOTOR CONTROL CENTERS, PANELBOARDS, MOTOR CONTROLLERS, SPECIAL PURPOSE DEVICE PLATES, FEEDERS, ETC. SHALL BE PROPERLY LABELED OR MARKED TO IDENTIFY THEIR SERVICE. LABELING SHALL BE AS FOLLOWS:
   a. EQUIPMENT/DEVIICES: ALL ITEMS OF ELECTRICAL EQUIPMENT SHALL BE IDENTIFIED BY THE ATTACHMENT OF ENGRAVED NAMEPLATES CONSTRUCTED FROM LAMINATED PHENOLIC PLASTIC, AT LEAST 1/16" THICK, 3 PLY, BLACK SURFACES, AND WHITE CORE. ENGRAVING SHALL BE CONDENSED GOTHIC, AT LEAST 1/4" HIGH. LABEL NOMENCLATURE SHALL CONFORM TO THE SCHEDULES AND DRAWINGS.

O. VIBRATION ISOLATION

1. THE CONTRACTOR SHALL FURNISH AND INSTALL VIBRATION ISOLATION MEANS FOR ALL EQUIPMENT AND MATERIALS FURNISHED UNDER THIS CONTRACT TO PREVENT THE TRANSMISSION OF PERCEPTIBLE VIBRATION, AND STRUCTURE BORNE OR AIR BORNE NOISE TO OCCUPIED AREAS. ITEMS REQUIRING VIBRATION ISOLATION SHALL INCLUDE:
   a. ALL TRANSFORMERS, MOTOR CONTROL CENTERS, SWITCHGEAR, UNIT SUBSTATIONS, ETC. SHALL BE MOUNTED ON 1" THICK CORK RIB PADS AND/OR RUBBER OR STEEL SPRING ISOLATOR UNITS PROPERLY SIZED, SPACED, AND LOADED, WHICH IN TURN SHALL REST ON A 4" MINIMUM CONCRETE BASE.
   b. WHERE TRANSFORMERS ARE SUSPENDED FROM THE STRUCTURE ABOVE, EACH HANGER SHALL BE EQUIPPED WITH DOUBLE DEFLECTING STEEL SPRING AND RUBBER IN SHEAR ANTIVIBRATION HANGERS. THE RUBBER IN SHEAR MOUNTING FOR EACH HANGER SHALL PROVIDE A STATIC DEFLECTION AT LEAST EQUIVALENT TO THE STATIC DEFLECTION FOR A 1/4" RUBBER PAD. ANTIVIBRATION MOUNTINGS SHALL BE EQUIPPED WITH ADEQUATE LEVELING MECHANISMS WHICH DO NOT INTERFERE WITH PROPER HANGER OPERATION.
   c. ELECTRICAL CONDUIT: ELECTRICAL CONDUIT SHALL BE ISOLATED FROM ALL DRY TYPE TRANSFORMERS, AND ROTATING OR RECIPROCATING MACHINERY WITH 12" OF FLEXIBLE CONDUIT PER 1" OF CONDUIT DIAMETER. THE MINIMUM LENGTH OF FLEXIBLE CONDUIT USED FOR ISOLATION WILL BE 24". PVC COATED LIQUID TIGHT FLEXIBLE CONDUIT SHALL BE USED IN DAMP AND WET LOCATIONS.

P. GUARANTEE:

1. GUARANTEE AGAINST DEFECTS IN MATERIALS, EQUIPMENT AND WORKMANSHIP COVERED BY THE SPECIFICATIONS AND MAKE GOOD, REPAIR, OR REPLACE, WITHOUT COST TO THE OWNER, ANY DEFECTIVE WORK, MATERIAL, OR PART WHICH MAY BECOME EVIDENT WITHIN A PERIOD OF ONE YEAR AFTER FINAL ACCEPTANCE OF THE WORK. NECESSARY SERVICE AND ADJUSTMENT DURING THE EARLY STAGES OF OPERATION AFTER OCCUPANCY SHALL BE PROVIDED BY THE CONTRACTOR WITHOUT ADDITIONAL COST TO OWNER.

Q. BUILDING CONSTRUCTION AND LAYOUT OF WORK

1. GENERAL: IT SHALL BE THE RESPONSIBILITY OF THE CONTRACTOR TO CONSULT THE ARCHITECTURAL AND ENGINEERING DRAWINGS AND DETAILS SO AS TO THOROUGHLY FAMILIARIZE HIMSELF WITH THE TYPE AND QUALITY OF CONSTRUCTION TO BE PROVIDED ON THIS PROJECT.

2. THE ELECTRICAL DRAWINGS ARE DIAGRAMMATIC IN NATURE AND DO NOT SHOW EVERY CONNECTION IN DETAIL OR EVERY LINE OR CONDUIT IN ITS EXACT LOCATION. THESE DETAILS ARE SUBJECT TO THE REQUIREMENTS OF ALL CODES AND ORDINANCES AS WELL AS ALL STRUCTURAL AND ARCHITECTURAL CONDITIONS. THE CONTRACTOR SHALL CAREFULLY INVESTIGATE STRUCTURAL AND FINISH CONDITIONS AND SHALL COORDINATE THE SEPARATE TRADES IN ORDER TO AVOID INTERFERENCE BETWEEN THE VARIOUS PHASES OF WORK. WORK SHALL BE LAID OUT SO THAT IT WILL BE CONCEALED IN FURRED CHASES UNLESS SPECIFICALLY NOTED OR INDICATED TO BE EXPOSED. WORK SHALL BE INSTALLED TO AVOID CRIPPLING OF STRUCTURAL MEMBERS; THEREFORE, INSERTS TO ACCOMMODATE CONDUIT HANGERS SHALL BE SET BEFORE CONCRETE IS POURED, AND PROPER OPENINGS THROUGH FLOORS, WALLS, BEAMS, ETC. SHALL BE PROVIDED AS HEREINAFTER SPECIFIED OR AS OTHERWISE INDICATED OR REQUIRED BEFORE CONCRETE IS POURED. ALL WORK SHALL BE RUN PARALLEL OR PERPENDICULAR TO THE LINES OF THE BUILDING UNLESS OTHERWISE NOTED.

3. THE APPROXIMATE LOCATION OF ELECTRICAL ITEMS IS INDICATED ON THE ELECTRICAL DRAWINGS. EXACT LOCATIONS ARE TO BE DETERMINED BY ACTUAL FIELD MEASUREMENTS AND WILL IN ALL CASES BE SUBJECT TO THE APPROVAL OF THE ARCHITECT/ENGINEER. THE ARCHITECT/ENGINEER RESERVES THE RIGHT TO MAKE ANY REASONABLE CHANGES IN THE INDICATED LOCATIONS PRIOR TO INSTALLATION FOR NO ADDITIONAL COST.

R. TESTS

1. THE CONTRACTOR SHALL PERFORM TWO (2) LEVELS/TYPES OF TESTING ON THIS PROJECT. THE FIRST TYPE OF TESTING WILL BE SYSTEM TESTING PERFORMED BY THE CONTRACTOR AND SYSTEM SUPPLIER (WHERE APPLICABLE) TO INSURE THE SYSTEM IS PROPERLY INSTALLED AND FUNCTIONING AND IS READY FOR FINAL DEMONSTRATION TESTING TO THE ARCHITECT, ENGINEER, AND OWNER. ONCE ALL SYSTEMS TESTING HAS BEEN COMPLETED, THE CONTRACTOR AND SYSTEM SUPPLIER SHALL SO CERTIFY IN WRITING AND SUBMIT TO THE ARCHITECT FOR APPROVAL. UPON APPROVAL, A DATE WILL BE SET FOR THE SECOND TYPE OF TESTING. THE SECOND TYPE OF TEST WILL BE A FINAL ACCEPTANCE DEMONSTRATION PERFORMED BY THE CONTRACTOR FOR THE ARCHITECT, ENGINEER, AND OWNER.
   a. THE CONTRACTOR SHALL PROVIDE ALL TEST EQUIPMENT, TEMPORARY WIRING, LABOR, ETC. REQUIRED TO PERFORM BOTH TESTS.

2. SYSTEM TESTS:
   a. AFTER WIRES AND CABLES ARE IN PLACE, BUT BEFORE BEING CONNECTED TO DEVICES AND EQUIPMENT, THE CONTRACTOR SHALL TEST THE SYSTEM FOR SHORTS, OPENS, AND UNINTENTIONAL GROUNDS BY MEANS OF AN APPROVED TYPE OF CONSTANT "MEGGER". REPLACE OR CLEAR ALL CONDUCTORS OR CABLES THAT ARE SHORTED OR UNINTENTIONALLY GROUNDED.
   b. GROUND TEST SHALL BE RUN AS SPECIFIED IN THE GROUNDING SPEC (PART V).
   c. TEST THE INSULATION RESISTANCES OF ALL MOTOR WINDINGS TO GROUND WITH A "MEGGER" BEFORE APPLYING LINE VOLTAGE TO THE MOTORS. IF THESE VALUES ARE LESS THAN 1 MEGOHM, THE CONTRACTOR FURNISHING THE MOTOR SHALL BE RESPONSIBLE FOR CORRECTING THE ERROR.
   d. WITH THE SYSTEM ENERGIZED, LINE-TO-LINE VOLTAGE AND LINE CURRENT MEASUREMENTS SHALL BE MADE AT ALL MOTORS UNDER FULL LOAD CONDITIONS. SHOULD MEASURED VALUES DEVIATE ±5% FROM THE NAMEPLATE RATINGS, THE CONDITION SHALL BE CORRECTED. NOTIFY THE ARCHITECT/ENGINEER IMMEDIATELY SHOULD DEVIATIONS OCCUR.
   e. THE CONTRACTOR SHALL TEST ALL RECEPTACLES FOR POWER POLARITY AND GROUND TO ASSURE THAT ALL RECEPTACLES ARE OPERATING PROPERLY, CORRECTLY WIRED, AND SUITABLY GROUNDED. PROVIDE AN AFFIDAVIT TO THE EFFECT THAT THIS WORK HAS BEEN ACCOMPLISHED, WHEN, AND BY WHOM PERFORMED.
   f. CHECK ALL MOTORS FOR THE PROPER ROTATION.
   g. ALL SYSTEMS SUCH AS DIMMING, SOUND, FIRE ALARM, SECURITY, ETC. SHALL BE TESTED BY THE SYSTEM SUPPLIER. ONCE ALL SYSTEM TESTING IS COMPLETE AND THE SYSTEM IS OPERATING TROUBLE FREE, THE SYSTEM SUPPLIER SHALL FURNISH A CERTIFICATION THAT THE SYSTEM HAS BEEN COMPLETELY TESTED BY HIM (INCLUDING EACH AND EVERY DEVICE AND OPTION) AND THAT THE SYSTEM IS COMPLETE AND OPERATING IN ACCORDANCE WITH THE PLANS AND SPECIFICATIONS AND REQUIREMENTS OF ALL SYSTEM REGULATING BOARDS. THESE CERTIFICATIONS SHALL BE INCLUDED WITH THE CONTRACTOR'S FINAL SYSTEMS CERTIFICATIONS.
   h. SYSTEM VOLTAGES SHALL BE MEASURED AND RECORDED UNDER MAXIMUM LOAD CONDITIONS AVAILABLE DURING CONSTRUCTION. INCOMING SERVICE VOLTAGE, AS WELL AS TRANSFORMER SECONDARY VOLTAGES, SHALL BE CHECKED AND ADJUSTED TO BE EQUAL TO THE VOLTAGE RATING, OR NOT EXCEEDING 2–1/2% ABOVE THE VOLTAGE RATING. A RECORD OF EACH FINAL TEST ALONG WITH TIME OF DAY, DATE, AND CONDITIONS OF LOADING SHOULD BE RECORDED FOR EACH TEST LOCATION.
   i. TEST FOR LOAD DIVISION BETWEEN ALL CONDUCTORS IN PARALLEL FEEDERS. DIVISION OF CURRENTS SHALL NOT EXCEED 10% OF FEEDER CURRENT. RECORD OF TEST FOR EACH PARALLEL FEEDER SHALL BE MADE. RECORDS SHALL BE COMPLETE WITH AMPERAGE, VOLTAGE, AND FEEDER IDENTIFICATION. WHERE CORRECTIVE MEASURES ARE TAKEN, BEFORE AND AFTER TESTS SHALL BE PROVIDED. ALL TESTS SHALL BE SIGNED BY THE TESTER AND THE WITNESS OF THE TEST.
   j. DO NOT SUBJECT GROUND FAULT INTERRUPTING (GFI) TYPE BREAKERS OR RECEPTACLES TO MEGGER TESTS.
   k. WHEN THE CONTRACTOR HAS COMPLETED ALL SYSTEMS AND CORRECTED ALL PROBLEMS OR DEFICIENCIES, HE WILL SUBMIT AN ITEMIZED CERTIFICATION THAT ALL SYSTEMS ARE COMPLETE AND READY FOR FINAL ACCEPTANCE DEMONSTRATION. ALONG WITH HIS CERTIFICATION, THE CONTRACTOR SHALL INCLUDE ALL TESTING REPORTS AND SUPPLIER CERTIFICATIONS.
   l. SPECIAL TESTS SHALL BE MADE WHERE CALLED FOR IN THESE DRAWINGS AND SPECIFICATIONS.

3. DEMONSTRATION TEST OF COMPLETED SYSTEMS (NOT ALL REQUIRED):
   a. DEMONSTRATE THE ESSENTIAL FEATURES AND PROPER OPERATION OF ALL SYSTEMS, INCLUDING:
   b. COMMUNICATIONS SYSTEMS:
      1) FIRE AND SMOKE DETECTION SYSTEMS.
      2) INTERCOMMUNICATION EQUIPMENT.
      3) TELEPHONE SYSTEMS.
   c. ELECTRICAL SERVICE ENTRANCE EQUIPMENT:
      1) FUSES, FUSEHOLDERS, AND SWITCHES.
      2) METER SOCKETS AND METERS.
      3) SWITCHING.
      4) CIRCUIT BREAKERS.
      5) GROUND FAULT SENSING AND/OR INTERRUPTING DEVICES.
   d. ELECTRICAL SYSTEMS CONTROLS AND EQUIPMENT:
      1) ELECTRICAL POWER EQUIPMENT.
      2) MOTOR CONTROL DEVICES.
      3) SPECIAL TRANSFORMERS.
      4) STARTING DEVICES.
      5) CONTACTORS.
      6) SWITCHES.
   e. LIGHTING FIXTURES:
      1) EXIT AND SAFETY FIXTURES.
      2) FIXTURES, INDOOR AND OUTDOOR.
      3) FIXTURES, SPECIAL.
   f. PANELBOARDS:
      1) DISTRIBUTION PANELS.
      2) LIGHTING PANELS.
      3) MAIN PANELS AND POWER PANELS.
      4) SWITCHBOARDS.
   g. WIRING DEVICES:
      1) COVERPLATES.
      2) LOW VOLTAGE CONTROLS.

S. OUTLETS: CONVENIENCE AND SPECIAL PURPOSE.

1. SWITCHES: STANDARD.
   a. DEMONSTRATE BY "START-STOP OPERATION" HOW TO WORK THE CONTROLS, TO RESET PROTECTIVE DEVICES, TO REPLACE FUSES, AND WHAT TO DO IN CASE OF EMERGENCY.
   b. EACH SYSTEM SHALL BE DEMONSTRATED ONCE ONLY AFTER COMPLETION OF SATISFACTORY SYSTEM TESTING AND ACCEPTANCE. ADDITIONAL DEMONSTRATIONS REQUIRED BECAUSE SYSTEMS ARE NOT READY/COMPLETE WILL BE AT THE CONTRACTOR'S COST.
   c. THE DEMONSTRATION SHALL BE HELD UPON COMPLETION AND ACCEPTANCE OF ALL SYSTEMS AT A DATE TO BE AGREED UPON IN WRITING BY THE ARCHITECT/ENGINEER.

II. BASIC MATERIALS

A. CONDUIT:

1. INSTALL WIRING IN CONDUIT. PROVIDE EMT (ELECTRICAL METALLIC TUBING) EXCEPT IN DAMP OR WET LOCATIONS, UNDERGROUND, HAZARDOUS LOCATIONS, OUTDOORS, AND IN LOCATIONS SUBJECT TO PHYSICAL DAMAGE WHERE RGS (RIGID GALVANIZED STEEL) OR IMC (INTERMEDIATE METAL CONDUIT) SHALL BE PROVIDED.

2. RIGID METAL CONDUIT AND IMC:
   a. SHALL BE USED IN GROUND BEARING SLABS, IN MECHANICAL EQUIPMENT ROOMS TO A HEIGHT OF 60 INCHES ABOVE FINISHED FLOOR, FOR SERVICE ENTRANCE CONDUITS, FEEDER CONDUITS, CONDUITS INSTALLED OUTDOORS OR EXPOSED TO THE ELEMENTS, CONDUITS IN DAMP OR WET LOCATIONS, WHERE EXPOSED TO SEVERE PHYSICAL DAMAGE, AND FOR CONDUITS INSTALLED UNDERGROUND, EXCEPT AS HEREIN OTHERWISE ALLOWED.
   b. WHERE INSTALLED UNDERGROUND, IT SHALL BE PROTECTED BY THE APPLICATION OF 0.010-INCH THICK PIPE WRAPPING TAPE, FIELD APPLIED WITH 50% SPIRAL OVERLAP, OR SHALL HAVE A FACTORY APPLIED EXTERIOR PLASTIC RESIN, EPOXY OR COAL TAR COATING 0.02 INCH THICK.

3. ELECTRICAL METALLIC TUBING (EMT):
   a. MAY BE INSTALLED:
      1) WHERE CONCEALED ABOVE GRADE.
      2) WHERE EXPOSED 60 INCHES ABOVE FINISHED FLOOR IN MECHANICAL ROOMS.
      3) IN FLOOR SLABS ABOVE GRADE. ALL STUB-UPS SHALL BE RIGID METAL CONDUIT.
   b. SHALL NOT BE INSTALLED:
      1) FOR FEEDER CONDUITS.
      2) UNDERGROUND.
      3) IN GROUND BEARING SLABS.
      4) IN HAZARDOUS LOCATIONS.
      5) IN AREAS WHERE SUBJECT TO SEVERE PHYSICAL DAMAGE.
      6) IN DAMP OR WET LOCATIONS.
      7) OUTDOORS WHERE EXPOSED TO THE ELEMENTS.

4. RIGID NONMETALLIC CONDUIT:
   a. MAY BE INSTALLED UNDERGROUND FOR SERVICE ENTRANCE CONDUITS FROM A POINT 5'-0" OUTSIDE THE BUILDING TO THE POINT OF INTERSECTION WITH THE RIGID METAL CONDUIT ELBOWS AT THE SERVICE RISER OR THE SERVICE TRANSFORMER.
   b. MAY BE INSTALLED FOR UNDERGROUND BRANCH CIRCUIT AND FEEDER CONDUITS FROM A POINT 5'-0" OUTSIDE THE BUILDING LINE TO THE LOAD SERVED. TRANSITION FROM UNDERGROUND TO ABOVE GRADE SHALL BE MADE USING RIGID METAL CONDUIT ELBOWS.
   c. MAY BE INSTALLED IN FLOOR SLABS ON OR ABOVE GRADE. STUBS-UPS SHALL BE MADE USING RIGID METAL CONDUIT ELBOWS. PVC ELBOWS SHALL NOT BE USED FOR STUB-UPS.
   d. MAY BE INSTALLED UNDER BUILDING SLAB ON GRADE WHEN ENCASED IN A 3-INCH THICK ENVELOPE OF 2500 PSI CONCRETE. WHERE PASSING THROUGH BEAMS OR FOOTINGS, RIGID CONDUIT SHALL BE INSTALLED TO EXTEND 5'-0" EITHER SIDE THEREOF. WHERE PASSING BELOW GRADE BEAMS, BURIAL DEPTH SHALL BE SUFFICIENT TO PREVENT CRUSHING OF CONDUIT.
   e. SHALL NOT BE INSTALLED CONCEALED OR EXPOSED WITHIN THE BUILDING, EXCEPT AS SPECIFIED HEREIN OR AS SPECIFICALLY NOTED ON THE DRAWINGS.
   f. WHERE INSTALLED BELOW GRADE, JOINTS SHALL BE MADE WATER TIGHT. INSTALL COUPLINGS, CONNECTORS, AND ELBOWS USING APPROVED ADHESIVE, DRIVING JOINT TIGHT AND PERMITTING TO SET BEFORE BACKFILLING OR INSTALLING CONDUCTORS.

5. FLEXIBLE AND LIQUID TIGHT METAL CONDUIT:
   a. SHALL BE INSTALLED FROM THE POINT OF CONNECTION TO VIBRATION PRODUCING EQUIPMENT AND MACHINES SUCH AS TRANSFORMERS, ROTATING AND RECIPROCATING EQUIPMENT, TO THE POINT OF CONNECTION WITH THE RIGIDLY SUPPORTED BRANCH CIRCUIT CONDUIT WIRING SYSTEM. MINIMUM LENGTH SHALL BE 24-INCH OR 12-INCH PER 1 INCH OF CONDUIT DIAMETER, WHICHEVER IS GREATER.
   b. MAY BE INSTALLED IN LENGTHS TO 72 INCHES TO CONNECT RECESSED LIGHTING FIXTURES IN ACCESSIBLE CEILINGS TO THE BRANCH CIRCUIT WIRING SYSTEM.
   c. SHALL HAVE LIQUID TIGHT PVC JACKET AND SHALL BE TERMINATED USING UL LISTED LIQUID TIGHT FITTINGS WHEN INSTALLED IN DAMP AND WET LOCATIONS AND IN LOCATIONS SUBJECT TO AIRBORNE OIL, GREASE, EXHAUST FUMES, OR SIMILAR CONTAMINANTS.
   d. WITH APPROVAL OF THE ARCHITECT, MAY BE INSTALLED IN DRY LOCATIONS WHERE CONDITIONS PRECLUDE THE INSTALLATION OF RIGID CONDUIT SYSTEMS, OR TO SPAN EXPANSION JOINTS BY CONNECTING BETWEEN PULL BOXES LOCATED EITHER SIDE OF THE JOINT, WITH SUFFICIENT LENGTH TO COMPENSATE FOR MOVEMENT.

6. CONDUIT INSTALLATION: UNLESS INDICATED OTHERWISE, CONCEAL CONDUIT WITHIN WALLS, CEILINGS, AND FLOORS. WHERE CONDUIT MUST BE RUN EXPOSED IN OTHER THAN MECHANICAL AND ELECTRICAL ROOMS OR AREAS WITHOUT FINISHED CEILINGS, CONSULT THE ARCHITECT AND OBTAIN APPROVAL OF ROUTING PRIOR TO INSTALLATION.
   a. SPACIAL RELATIONSHIPS TO COMMUNICATION SYSTEMS:
      1) NO CONDUIT CONTAINING POWER FEEDERS OR BRANCH CIRCUITS SHALL ENTER OR PASS THROUGH ANY COMMUNICATION/TELEPHONE ROOM, CLOSET, OR SIMILAR SPACE EXCEPT AS REQUIRED TO SERVICE LIGHTING FIXTURES, EQUIPMENT, OR WIRING DEVICES THEREIN. ONLY THOSE POWER CONDUCTORS NECESSARY TO SERVE THE ROOM, CLOSET, OR SPACE SHALL ENTER OR PASS THROUGH. ALL OTHERS SHALL DIVERT AROUND.
      2) CONDUITS CONTAINING POWER FEEDERS OR BRANCH CIRCUITS SHALL MAINTAIN THE FOLLOWING SEPARATIONS FROM COMMUNICATION CABLE TRAYS AND RACEWAYS:
         A) 30 INCHES FROM CABLE TRAY (PARALLELING).
         B) 12 INCHES FROM CABLE TRAY (PERPENDICULAR CROSSING).
         C) 6 INCHES FROM MAGNETIC METAL COMMUNICATION CONDUIT (PARALLELING).
         D) 6 INCHES FROM MAGNETIC METAL COMMUNICATION CONDUIT (PERPENDICULAR CROSSING).
   b. DO NOT INSTALL HORIZONTAL RUNS OF CONDUIT ABOVE OR BELOW IN PARALLEL WITH STEAM, WATER, OR WASTE PIPING. MAINTAIN PARALLEL RUNS A MINIMUM OF 6 INCHES FROM STEAM AND HOT WATER PIPING, AND A MINIMUM OF 24 INCHES FROM BOILER FLUES OR EXHAUST STACKS.
   c. INSTALL PARALLEL WITH OR AT RIGHT ANGLES TO BUILDING LINES, STRUCTURAL MEMBERS, CEILING MEMBERS, AND WALLS WHERE LOCATED ABOVE ACCESSIBLE CEILINGS OR WHERE VISIBLE AFTER COMPLETION OF PROJECT.
   d. MAKE CHANGES OF DIRECTION USING FACTORY ELBOWS, UL LISTED CONDUITS BODIES, OR APPROPRIATELY SIZED JUNCTION OR PULL BOXES. MAKE FIELD-MADE BENDS AND OFFSETS USING PROPER CONDUIT HICKEYS, HAND BENDERS, OR MECHANICAL BENDERS.
   e. INSTALL PULL BOXES TO LIMIT THE NUMBER OF EQUIVALENT 90 DEGREE BENDS IN ANY CONDUIT RUN TO THREE TO PREVENT EXCEEDING THE MAXIMUM PULLING TENSION AND SIDE WALL PRESSURE OF INSTALLED WIRE AND CABLE.
   f. INSTALL CONDUITS PASSING THROUGH FIRE RATED PARTITIONS, WALLS, AND FLOORS IN A MANNER SO AS TO MAINTAIN THE SPECIFIED AND REQUIRED FIRE RATING. SEAL OPENINGS AND ANNULAR SPACES OF PIPE SLEEVES WITH A FOAM FIRE STOP SEALANT EQUAL TO DOW CORNING #3-6548 SILICONE RTV, OR PROVIDE UL LISTED SMOKE AND FIRE STOP FITTINGS, EQUAL TO OZ/GEDNEY "FIRE SEAL" FITTINGS.

7. PROVIDE FLEXIBLE METAL CONDUIT FOR CONNECTION TO MOTORIZED EQUIPMENT AND EQUIPMENT SUBJECT TO MOVEMENT OR VIBRATION.

8. PROVIDE SUPPORT AT A MAXIMUM OF 8'-0" ON CENTER AND AT NOT MORE THAN 3'-0" FROM ALL OUTLET BOXES, JUNCTION BOXES, PULL BOXES, CABINETS AND FITTINGS, AND AT EACH ELBOW. SUPPORT CONDUIT BY MEANS OF PIPE STRAPS, WALL BRACKETS, HANGERS, OR TRAPEZE ASSEMBLIES. THE LOAD APPLIED TO FASTENERS AND SUPPORTS SHALL NOT EXCEED 1/4TH OF THE PROOF TEST LOAD. PERFORATED STRAP IRON IS UNACCEPTABLE.

B. WIRE AND CABLE

1. ELECTRICAL WIRING SHALL BE COPPER CONDUCTOR, THHN INSULATION, 90 DEGREES C. THE MINIMUM SIZE OF CONDUCTOR SHALL BE #12 AWG. CONDUCTOR OF #8 GAUGE AND LARGER SHALL BE STRANDED. STRANDED WIRE SHALL NOT BE TERMINATED UNDER SCREW TERMINALS.

2. HOMERUNS TO PANELBOARDS SHALL BE #10 AWG.

3. PRIOR TO ENERGIZING FEEDERS, CHECK WIRING FOR CONTINUITY AND FOR SHORT CIRCUITS. CORRECT MALFUNCTIONS WHEN DETECTED.

4. MULTIWIRE BRANCH CIRCUITS AND IG BRANCH CIRCUITS CONSISTING OF NOT MORE THAN THREE PHASE CONDUCTORS AND WITH NO TWO OF THESE PHASE CONDUCTORS FROM THE SAME PHASE ARE PERMITTED. NEUTRALS MAY NOT BE SHARED ON DEDICATED CIRCUITS, FLUORESCENT OR HID LIGHTING CIRCUITS OR NONLINEAR LOADED CIRCUITS.

C. OUTLET, SWITCH AND JUNCTION BOXES:

1. ELECTRICAL OUTLET, SWITCH, AND JUNCTION BOXES: METALLIC, OF ONE PIECE CONSTRUCTION, PROTECTED AGAINST CORROSION. JUNCTION BOXES SHALL BE PROVIDED WITH COVERS.

2. JUNCTION BOXES SHALL BE MARKED TO IDENTIFY THE CIRCUIT(S) CONTAINED. OUTLET, SWITCH, AND JUNCTION BOXES SHALL BE SUPPORTED IN ACCORDANCE WITH ARTICLE 314 OF THE NEC. WIRE SHALL NOT BE USED TO SUPPORT ANY BOX. SWITCH BOXES SHALL NOT BE USED AS JUNCTION BOXES.

D. EXECUTION

1. WHEN ELECTRICAL METALLIC TUBING (EMT) IS USED, INSTALL BRANCH CIRCUITING IN MINIMUM SIZE OF 3/4" CONDUIT. INSTALL NO MORE THAN THREE GENERAL PURPOSE OR IG POWER HOMERUNS PER CONDUIT. NOTE: THE NUMBER OF CONDUCTORS NEEDED FOR IG CIRCUITS REQUIRES A MINIMUM 1" CONDUIT FOR 3 CIRCUITS.

2. INSTALL WIRING FOR POWER FEEDERS, BRANCH CIRCUITS AND COMMUNICATIONS SYSTEMS IN SEPERATE RACEWAYS UNLESS OTHERWISE NOTED. DO NOT INSTALL ISOLATED GROUND AND NON-ISOLATED GROUND CIRCUITS IN THE SAME CONDUIT.

3. FOR ISOLATED GROUND CIRCUITS PROVIDE ONE NEUTRAL AND ONE ISOLATED GROUND WIRE FOR EACH CIRCUIT. EQUIPMENT GROUND WIRES MAY BE SHARED WITH OTHER ISOLATED GROUND CIRCUITS.

4. METAL-CLAD CABLE, TYPE MC, MAY BE INSTALLED IN CONCEALED AREAS, ENCLOSED CEILINGS AND WALLS PER CODE AND PROPERLY COLOR CODED IF ALL NEUTRAL WIRES, ISOLATED GROUND WIRES AND EQUIPMENT GROUND WIRES AS LISTED ABOVE ARE CONTAINED IN THE CABLE. TYPE MC IS PERMITTED IN HARD CEILINGS. MAX MC LENGTH IN ACCESSIBLE AREAS IS 72".

5. PROVIDE COLOR CODING ON 208Y/120 VOLT FEEDERS AND BRANCH CIRCUITS AS FOLLOWS:
   a. PHASE A – BLACK
   b. PHASE B – RED
   c. PHASE C – BLUE
   d. NEUTRAL – WHITE (PROVIDE WHITE WITH A COLOR TRACE FOR NEUTRAL WIRES ORIGINATING FROM THE ISOLATED GROUND PANELBOARD.)
   e. GROUND – GREEN
   f. ISOLATED GROUND – GREEN WITH YELLOW TRACE. SOLID GREN WIRE WITH YELLOW TAPE AT SPLICE/TERMINATION POINTS IS NOT ACCEPTACLE.

6. POWER FEEDER TO THE IG PANELBOARD CONSISTING OF THREE PHASE CONDUCTORS, ONE FULL-SIZE NEUTRAL, ONE EQUIPMENT GROUND (MINIMUM OF #6 AWG) AND ONE ISOLATED GROIUND CONDUCTOR (MINIMUM OF #6 AWG).

7. LABEL EACH ISOLATED GROUND RECEPTACLE WITH THE PANEL DESIGNATION AND CIRCUIT BREAKER NUMBER IT IS CONNECTED TO (I.E. 'G-14'). PLACE TYPED, SELF-ADHESIVE LABEL ON RECEPTACLE FACEPLATE. HANDWRITTEN LABELS ARE NOT ACCEPTABLE. IDENTIFY EACH BREAKER AT THE PANEL AND THE DEVICES IT SERVES ON THE CIRCUIT DIRECTORY.

III. WIRING DEVICES

A. RECEPTACLES: 20A., 125V DUPLEX RECEPTACLES SHALL BE ARROWHART #5352 OR APPROVED EQUAL BY HUBBELL, COOPER, PASS & SEYMOUR, OR EQUAL. 20A RECEPTACLES, MATCHING THE ABOVE SHALL BE USED ON ALL INDIVIDUAL OR DEDICATED CIRCUITS. MOUNT @ 15" AFF. ISOLATED GROUND RECEPTACLES SHALL BE ORANGE IN COLOR, NEMA 5-20R, HUBBELL IG 5362, COOPER IG 5362, PASS & SEYMOUR IG 6300, OR APPROVED EQUAL.

B. WALL SWITCHES: 20A., 125/277V, SPST WALL SWITCHES SHALL BE ARROWHART #1991I OR APPROVED EQUAL BY HUBBELL OR LEVITON. THREE AND FOUR WAY SWITCHES MATCHING THE ABOVE SHALL BE USED WHERE REQUIRED. WHERE WALL SWITCHES ARE INDICATED ADJACENT TO WALLBOX DIMMERS, THE SWITCHES SHALL BE LUTRON NT-1PS AS REQUIRED. OCCUPANCY SENSORS SHALL BE WATTSTOPPER (WALL MOUNTED #WS-200 AND CEILING MOUNTED CI-355) OR APPROVED EQUAL.

C. WALL PLATES: WALL PLATES FOR WIRING DEVICES, TELEPHONE OUTLETS, AND COMMUNICATION OUTLETS SHALL BE THERMOPLASTIC WITH COLOR TO MATCH DEVICES AND AS DIRECTED BY THE ARCHITECT.

IV. GROUNDING

A. GENERAL: THE ELECTRICAL SYSTEM SHALL BE GROUNDED IN ACCORDANCE WITH ARTICLE 250 OF THE NATIONAL ELECTRICAL CODE. NON-CURRENT CARRYING METALLIC PARTS OF THE DISTRIBUTION SYSTEM SHALL BE GROUNDED BY A BOND CONNECTION TO A SYSTEM GROUNDING ELECTRODE.

B. MATERIALS

1. GROUND RODS (WHERE REQUIRED) SHALL BE COPPER CLAD STEEL RODS. THE MINIMUM SIZE SHALL BE 3/4-INCH DIAMETER BY 10'-0" LONG.

2. CONNECTORS SHALL BE INDUSTRY STANDARD TYPE FOR GROUND CONNECTIONS, TAPS AND THE LIKE. CONNECTORS SHALL BE OF HOT DIP GALVANIZED MALLEABLE IRON, CAST BRONZE, OR COPPER ALLOY NONFERROUS MATERIAL, WHICH WILL NOT CAUSE GALVANIC ACTION BETWEEN THE CONTACT SURFACES.

3. CLAMPS, CONNECTORS, MECHANICAL LUGS, OR WIRE TERMINALS SHALL BE USED TO BOND GROUND WIRES TOGETHER OR TO JUNCTION AND PANEL BOXES.

4. ALL GROUND CONDUCTORS SHALL BE COPPER.

5. ALL EQUIPMENT GROUNDING CONDUCTORS SHALL HAVE A GREEN JACKET.

6. GROUND ELECTRODE CONDUCTORS AND BONDING JUMPERS SHALL BE BARE COPPER.

7. ALL MATERIALS SHALL BE UL LISTED.

8. CONDUCTORS #8 AWG AND LARGER SHALL BE STRANDED EXCEPT THAT POOL BONDING CONDUCTORS SHALL BE #8 AWG SOLID. CONDUCTORS SMALLER THAN #8 AWG SHALL BE SOLID WIRE.

9. GROUND BUSES SHALL BE PROVIDED IN ALL ELECTRICAL DISTRIBUTION EQUIPMENT.

C. SUPPLEMENTAL GROUNDING

1. ALL NONCURRENT CARRYING PARTS OF THE ELECTRICAL SYSTEM, INCLUDING ENCLOSURES, RECEPTACLES, MOTOR FRAMES, LIGHTING FIXTURES, ELECTRICALLY OPERATED AND/OR CONTROLLED COOLING-HEATING UNITS, ETC. SHALL BE GROUNDED BY METAL RACEWAY (WHERE USED) AND BY A SUPPLEMENTAL EQUIPMENT GROUNDING CONDUCTOR.

2. THE SUPPLEMENTAL GROUNDING CONDUCTOR SHALL BE INSULATED WITH A GREEN COVER FOR WIRE #6 AWG AND SMALLER. LARGER CONDUCTORS MAY BE IDENTIFIED WITH GREEN TAPE AT EVERY POINT WHERE THE CONDUCTOR IS ACCESSIBLE IN LIEU OF A CONTINUOUS GREEN COVER.

3. SUPPLEMENTAL EQUIPMENT GROUNDING CONDUCTORS SHALL BE ROUTED IN THE SAME CONDUIT WITH THE CIRCUIT CONDUCTORS. IN THE CASE OF MULTICONDUCTOR CABLE, THE CONDUCTOR SHOULD BE RUN INSIDE THE CABLE SHEATH OR JACKET.

4. SUPPLEMENTAL EQUIPMENT GROUNDING CONDUCTORS SHALL IN NO CASE BE A CURRENT CARRYING CONDUCTOR.

5. THE EQUIPMENT GROUNDING CONDUCTOR TO EXTERIOR LIGHTING STANDARDS GREATER THAN 10' HIGH SHALL BE SUPPLEMENTED BY A SEPARATE GROUND ROD BONDED TO THE NONCURRENT CARRYING METALLIC PARTS.

6. WHERE ISOLATED GROUND TYPE RECEPTACLES ARE INDICATED, AN INSULATED ISOLATED GROUND CONDUCTOR SHALL BE ROUTED IN THE ASSOCIATED BRANCH CIRCUIT RACEWAY AND FEEDER RACEWAY BACK TO THE TRANSFORMER GROUNDING LUG. PROVIDE AN ISOLATED GROUND BUS IN EACH PANELBOARD AS REQUIRED FOR CONNECTION OF ISOLATED GROUNDING CONDUCTORS. THIS BUS SHALL BE INSULATED FROM THE PANEL ENCLOSURE.

7. METAL FACEPLATES ON NONMETALLIC BOXES SHALL BE GROUNDED.

8. RECEPTACLES MUST BE CONNECTED BY MEANS OF A JUMPER TO THE BOX. THIS CONNECTION SHALL NOT BE MADE DIRECTLY TO THE GROUND WIRES. ALL GROUND WIRES ENTERING A BOX MUST BE SOLIDLY CONNECTED TOGETHER AND BONDED TO THE BOX OR ENCLOSURE.

D. RACEWAY AND ENCLOSURE BONDING

1. BONDING JUMPERS SHALL BE PROVIDED AROUND REMAINING CONCENTRIC OR ECCENTRIC KNOCKOUTS THAT ARE PUNCHED OR OTHERWISE FORMED IN THE ENCLOSURES AND BOXES OF ALL 480Y/277 AND 208Y/120 VOLT SYSTEMS.

2. CONDUIT EXPANSION JOINTS SHALL BE MADE ELECTRICALLY CONTINUOUS BY EQUIPMENT BONDING JUMPERS OR OTHER MEANS.

3. ALL METAL RACEWAYS, EQUIPMENT, FRAMES, ENCLOSURES, AND ALL OTHER METAL NONCURRENT CARRYING PARTS MUST BE BONDED TOGETHER IN ACCORDANCE WITH NEC SECTION 250-86. THIS BONDING SHALL BE INDEPENDENT OF THE GREEN EQUIPMENT GROUNDING CONDUCTOR.

4. UNDER SLAB METALLIC CONDUITS STUBBED-UP INTO ELECTRICAL ENCLOSURES SUCH AS SWITCHBOARDS AND PANELBOARDS SHALL BE BONDED TO THE ENCLOSURE.

5. METAL RACEWAYS, ENCLOSURES, FRAMES, AND OTHER NONCURRENT CARRYING METAL PARTS OF ELECTRICAL EQUIPMENT SHALL BE LOCATED MORE THAN 6'-0" FROM LIGHTNING ROD CONDUCTORS WHERE FEASIBLE. THEY SHALL BE BONDED TO LIGHTNING ROD CONDUCTORS WHERE THIS CLEARANCE IS NOT FEASIBLE.

6. THE NONCURRENT CARRYING METAL PARTS OF ALL ENCLOSURES CONTAINING SERVICE CONDUCTORS SHALL BE BONDED TOGETHER IN ACCORDANCE WITH NEC ARTICLE 250-86.

E. TESTS

1. THE RESISTANCE BETWEEN THE GROUND ELECTRODE SYSTEM AND ABSOLUTE EARTH SHALL NOT EXCEED 5 OHMS. IF THIS RESISTANCE EXCEEDS 5 OHMS, THE CONTRACTOR SHALL ADD GROUND RODS OR OTHER GROUNDING MEANS UNTIL THE GROUND RESISTANCE IS REDUCED TO LESS THAN 5 OHMS. ALL GROUND MEASUREMENTS SHALL BE MEASURED BY THE CONTRACTOR USING THE FALL OF POTENTIAL METHOD OF MEASUREMENT AND RECORDED AND SUBMITTED TO THE ARCHITECT/ENGINEER BEFORE ANY EQUIPMENT IS PLACED IN OPERATION. GROUND TESTS SHALL BE MADE IN NORMALLY DRY WEATHER OR NOT LESS THAN 24 HOURS AFTER RAINFALL. THE CONTRACTOR SHALL PROVIDE A REPORT CONTAINING THE DATE THAT THE READINGS WERE TAKEN, THE PERSON MAKING THE REPORT, THE PERSON MAKING READINGS (IF DIFFERENT), THE METHOD OF MEASUREMENT, AND THE WEATHER CONDITIONS AT TIME OF TEST. INCLUDE THE REPORT WITH THE FINAL SUBMITTAL OR RECORD DOCUMENTS.

V. ELECTRICAL DISTRIBUTION EQUIPMENT

1. ELECTRICAL DISTRIBUTION EQUIPMENT SHALL BE SIEMENS, SQUARE D, GE, OR CUTLER-HAMMER. PROVIDE ENGRAVED, PHENOLIC NAMEPLATES FOR EACH PANELBOARD. SUPPLY NEW, TYPE WRITTEN PANEL DIRECTORIES FOR EACH PANELBOARD AND DISTRIBUTION PANEL IN WHICH WORK IS BEING PERFORMED.

A. PANELBOARDS:

1. PROVIDE NEW AUTOMATIC CIRCUIT BREAKER PANELBOARDS, MOUNTED IN ENCLOSING CABINETS CONSISTING OF CODE GAUGE GALVANIZED SHEET STEEL WITH TRIM. ALL SURFACE/RECESSED MOUNTED PANELBOARDS SHALL BE CONSTRUCTED WITH A LOCKABLE, FULL LENGTH, HINGED DOORS.

2. PANELBOARD BUSSING SHALL BE COPPER AND SHALL CONTAIN AN EQUIPMENT GROUND BUS. PANELBOARDS SHALL HAVE CIRCUIT BREAKER CONNECTIONS WITH BOLT-IN CONNECTIONS TO THE MAIN BUS.

VI. LIGHTING FIXTURES AND LAMPS

A. LIGHTING FIXTURES:

1. FURNISH AND INSTALL LIGHTING FIXTURES, COMPLETE WITH LAMPS, FOR EACH LIGHTING OUTLET SHOWN ON THE DRAWINGS, EXCEPT FOR THOSE FIXTURES EXPLICITLY INDICATED IN THE LIGHTING FIXTURE SCHEDULE AS "OWNER FURNISHED". THE LIGHTING FIXTURES SHALL BE SUPPLIED AS SPECIFIED OR, ALTERNATE LIGHT FIXTURES MAY BE SUBMITTED TO THE ENGINEER NOT LATER THAN FIVE FULL WORKING DAYS PRIOR TO BID DUE DATE. REQUESTS FOR ALTERNATE APPROVAL SHALL BE IN THE SAME FORMAT AS THE SHOP DRAWING SUBMITTAL. SHOP DRAWINGS SHALL INCLUDE THE FOLLOWING INFORMATION FOR EACH SPECIFIC TYPE:
   a. TYPE (DESIGNATION)
   b. MANUFACTURER AND MODEL #
   c. DIFFUSER MFGR, PATTERN, NOMINAL THICKNESS AND DENSITY
   d. LAMP MANUFACTURER, MODEL # (PROVIDE SYLVANIA, PHILLIPS, OR GE), ORDERING CODE
   e. BALLAST MFGR (PROVIDE MOTOROLA, GE OR MAGNETEK)
   f. COMPLETE PHOTOMETRIC DATA
   g. COEFFICIENT OF UTILIZATION TABLE
   h. ACCESSORIES AND OPTIONS.

2. LIGHTING FIXTURES WITHIN THE SCOPE OF WORK SHALL BE PROVIDED WITH QUICK DISCONNECTS PER NEC 410.130(G).

VII. SPECIAL SYSTEMS

A. TELEPHONE AND DATA COMMUNICATIONS:

1. PROVIDE A 4" SQUARE, 1–1/2" DEEP JUNCTION BOX WITH PLASTER RING AND 3/4" CONDUIT TO ACCESSIBLE CEILING SPACE. CONDUIT SHALL CONTAIN NYLON 1/8" NYLON PULL STRING AND HAVE A TOP INSULATED BUSHING. PROVIDE ONE DEDICATED CONDUIT STUBOUT PER RECESSED TELEPHONE AND DATA BOX. PROVIDE #6 GND. AND GND. LUG AT TELEPHONE TERMINAL BOARD. ROUTE GROUND CONDUCTOR TO ESTABLISHED BUILDING GROUNDING POINT (STRUCTURAL STEEL, ETC.)

END OF SECTION

ELECTRICAL POWER/COMMUNICATION SYMBOLS LEGEND

(NOT ALL SYMBOLS MAY APPEAR ON DRAWINGS.)

⦶	DUPLEX RECEPTACLE FOR GENERAL PURPOSE.
⦶	CEILING MOUNTED DUPLEX RECEPTACLE.
⊕	QUADRAPLEX RECEPTACLE FOR GENERAL PURPOSE.
⊡	FLOOR MOUNTED DUPLEX RECEPTACLE.
▼	TELEPHONE OUTLET – EC TO PROVIDE CONDUIT ONLY. REFER TO VOICE/DATA DWGS.
▽	DATA OUTLET – EC TO PROVIDE CONDUIT ONLY. REFER TO VOICE/DATA DWGS.
▼	TELE/DATA OUTLET – EC TO PROVIDE CONDUIT ONLY. REFER TO VOICE/DATA DWGS.
▼	FLOOR MOUNTED TELE/DATA OUTLET – REFER TO TELEPHONE DESCRIPTION
●	208V SPECIAL RECEPTACLE (1ø OR 3ø)
□	NON-FUSED DISCONNECT SWITCH
⧄	FUSED DISCONNECT SWITCH
Ⓙ	CEILING MOUNTED JUNCTION BOX
J	WALL MOUNTED JUNCTION BOX
Ⓙ	FLOOR MOUNTED JUNCTION BOX
▼	COAXIAL CABLE OUTLET
◢	ELECTRICAL PANEL
⊕	EQUIPMENT CONNECTION
○	MOTOR
SM	FRACTIONAL MOTOR SWITCH
S	SINGLE POLE SWITCH
P1A–2,4,6	BRANCH CIRCUIT HOMERUN. SUBSCRIPT 'P1A' INDICATES PANEL AND 2,4,6 INDICATES BREAKER POSITION
⌒	SWITCHLEG
KP	ACCESS KEYPAD
⊡	PUSHBOTTON
S	SPEAKER
C	CLOCK
SC	SPEAKER/CLOCK
M	MICROPHONE
I	INTERCOM
P	PAGING SPEAKER
C	SECURITY CAMERA

ELECTRICAL LIGHTING SYMBOLS LEGEND

(NOT ALL SYMBOLS MAY APPEAR ON DRAWINGS.)

⧄	2'x4' RECESSED OR SURFACE FLUORESCENT FIXTURE
◪	2'x4' FLUORESCENT NIGHT LIGHT/EMERGENCY FIXTURE, NON-SWITCHED
○	SURFACE OR RECESSED LIGHT FIXTURE
◐	SURFACE OR RECESSED NIGHT LIGHT/EMERGENCY FIXTURE, NON-SWITCHED
⊢○	WALL MOUNTED SCONCE
▭	LINEAR WALL MOUNTED FIXTURE
▬	LINEAR WALL MOUNTED NIGHT LIGHT/EMERGENCY FIXTURE, NON-SWITCHED
⊢□	EXTERIOR WALL PACK
⧄	2'x2' FLUORESCENT FIXTURE
◪	2'x2' FLUORESCENT NIGHT LIGHT/EMERGENCY FIXTURE, NON-SWITCHED
▭	1'x4' RECESSED OR SURFACE MOUNTED FLUORESCENT FIXTURE
▬	1'x4' RECESSED OR SURFACE MOUNTED NIGHT LIGHT/ EMERGENCY FLUORESCENT FIXTURE
⊢○⊣	4' OR 8' FLUORESCENT STRIP, MOUNTING AS INDICATED ON PLANS
⊢●⊣	4' OR 8' NIGHT LIGHT/EMERGENCY FLUORESCENT STRIP, MOUNTING AS INDICATED ON PLANS
▾▾	TRACK FIXTURE, MOUNTING AS INDICATED ON PLANS
○□	POLE MOUNTED FIXTURE, MOUNTING AS INDICATED ON PLANS
⊓	EMERGENCY WALL PACK WITH NICAD BATTERY
⊗	EXIT SIGN WITH NICAD BATTERY PACK AND ARROWS AS SHOWN ON PLANS.
⊗	EXIT SIGN AND EMERGENCY WALL PACK WITH NICAD BATTERY PACK.
S	SINGLE POLE SWITCH
S3	THREE-WAY SWITCH
S4	FOUR-WAY SWITCH
SD	DIMMER SWITCH
SK	KEYED SWITCH
OS	CEILING MOUNTED OCCUPANCY SENSOR
OS	WALL MOUNTED OCCUPANCY SENSOR
PC	PHOTOCELL
PC	WALL MOUNTED PHOTOCELL
TC	TIME CLOCK
P1A–2,4,6	BRANCH CIRCUIT HOMERUN. SUBSCRIPT 'P1A' INDICATES PANEL AND 2,4,6 INDICATES BREAKER POSITION
⌒	SWITCHLEG

FIRE ALARM SYMBOLS LEGEND

(NOT ALL SYMBOLS MAY APPEAR ON DRAWINGS.)

FACP	FIRE ALARM CONTROL PANEL
ANN	FIRE ALARM ANNUNCIATOR PANEL
ⓢ	FIRE ALARM SMOKE DETECTOR.
ⓢ D	FIRE ALARM DUCT SMOKE DETECTOR
FS	FIRE/SMOKE DAMPER
ⓣ	FIRE ALARM THERMAL DETECTOR
F	FIRE ALARM MANUAL PULL STATION. MOUNT AT 54" AFF
TS	FIRE ALARM TAMPER SWITCH
FS	FIRE ALARM FLOW SWITCH
M	MONITOR MODULE
R	RELAY MODULE
⊠	FIRE ALARM AUDIO/VISUAL DEVICE. MOUNT AT 80"AFF OR 6" BELOW CEILING. (WHICHEVER IS LOWER)
⊠M	FIRE ALARM MINI AUDIO/VISUAL DEVICE. MOUNT AT 80"AFF OR 6" BELOW CEILING. (WHICHEVER IS LOWER)
☼	FIRE ALARM VISUAL DEVICE. MOUNT AT 80"AFF OR 6" BELOW CEILING. (WHICHEVER IS LOWER)

ABBREVIATIONS LEGEND

(NOT ALL ABBREVIATIONS MAY APPEAR ON DRAWINGS.)

A	AMPERE(S)
AC	ABOVE COUNTER
A/C	AIR CONDITIONING
AIC	AMPERE INTERRUPTING CAPACITY
AFF	ABOVE FINISHED FLOOR
AFG	ABOVE FINISHED GRADE
AHU	AIR HANDLING UNIT
ATS	AUTOMATIC TRANSFER SWITCH
BFF	BELOW FINISHED FLOOR
BFG	BELOW FINISHED GRADE
C	CONDUIT
CB	CIRCUIT BREAKER
DIA	DIAMETER
DIST	DISTRIBUTION
EF	EXHAUST FAN
EQMT	EQUIPMENT
EWC	ELECTRIC WATER COOLER
EF	EXHAUST FAN
E or EX.	EXISTING
FA	FIRE ALARM
FCU	FAN COIL UNIT
FT	FEET, FOOT
GFCI	GROUND FAULT CIRCUIT INTERRUPTER
GFI	GROUND FAULT INTERRUPTER
G	GROUND
HP	HORSEPOWER
HPS	HIGH PRESSURE SODIUM
IN	INCHES
INC	INCANDESCENT
IG	ISOLATED GROUND
KV	KILOVOLT
KVA	KILOVOLT AMPERE
KVAC	KILOVOLT AMPERE CAPACITIVE
KVAR	KILOVOLT AMPERE REACTIVE
KW	KILOWATT
KWH	KILOWATT HOUR
LPS	LOW PRESSURE SODIUM
MCC	MOTOR CONTROL CENTER
MDP	MAIN DISTRIBUTION PANEL
MH	METAL HALIDE
MLO	MAIN LUGS ONLY
MTG	MOUNTING
MV	MERCURY VAPOR
NA	NOT APPLICABLE
NC	NORMALLY CLOSED
NF	NON FUSED
NO	NORMALLY OPEN
OC	ON CENTER
PP	POWER POLE
PDP	POWER DISTRIBUTION PANEL
PNL	PANELBOARD
RL	RELOCATED
RM	REMOVED
SC	SPLIT CIRCUIT
SM	SURFACE MOUNTED
SW	SWITCH
SWBD	SWITCHBOARD
UH	UNIT HEATER
UON	UNLESS OTHERWISE NOTED
V	VOLT(S)
VP	VAPOR PROOF
W	WIRE OR WALL
WP	WEATHERPROOF
XFMR	TRANSFORMER
1P	ONE POLE
2P	TWO POLE
3P	THREE POLE
ø	PHASE

GENERAL ELECTRICAL NOTES:

1. IT SHALL BE THE RESPONSIBILITY OF THE CONTRACTOR TO RELOCATE TO THE PROPER SIDE OF THE DOOR ANY SWITCH, RECEPTACLE OR DEVICE BEING AFFECTED BY ANY CHANGE IN DIRECTION OF DOOR SWINGS AS SHOWN ON THE ARCHITECTURAL FLOOR PLAN.

2. THE CONTRACTOR SHALL BE RESPONSIBLE FOR COORDINATION BETWEEN TRADES TO PROVIDE CLEARANCE ABOVE CEILING BETWEEN RECESSED LIGHTING FIXTURES AND THERMAL INSULATION OR DUCTWORK IN ACCORDANCE WITH NEC, PARAGRAPH 410-116.

3. CONTRACTOR SHALL BE RESPONSIBLE FOR KEEPING THE AREA AROUND WHERE THEY ARE WORKING, THEIR EQUIPMENT STORAGE AREA, FREE OF TRASH, CUTTINGS, STRIPPINGS, AND DISCARDED ITEMS OF NATURE.

4. THE CONTRACTOR IS EXPECTED TO VISIT THE PROJECT SITE TO FAMILIARIZE HIMSELF WITH THE EXISTING CONDITIONS. ENTERING HIS BID IS INDICATION THAT HE HAS VISITED THE SITE AND PROJECT AREA AND ADJUSTMENTS TO THE PROJECT BECAUSE OF SITE OR PROJECT AREA CONDITIONS WILL BE AT NO CHARGE TO THE CONTRACT.

5. QUESTIONS PERTAINING TO THE PROJECT SHALL BE BROUGHT TO THE ATTENTION OF THE ENGINEER 7 DAYS PRIOR TO BID OPENING TO ALLOW AN ANSWER TO BE DISTRIBUTED TO ALL BIDDERS PRIOR TO BID DATE. FAILURE TO NOTIFY THE ENGINEER ASSUMES THAT NO MEANINGFUL QUESTIONS OR POSSIBLE CORRECTIONS EXIST AND THAT THOSE WHICH DO EXIST WILL BE RESOLVED AT NO ADDITIONAL CHARGE TO THE CONTRACT.

6. CONTRACTOR SHALL PROVIDE IN FIELD MARKINGS OF THE MAXIMUM AVAILABLE FAULT CURRENT ON SERVICE EQUIPMENT PER NEC 110.24.

7. LIGHTING FIXTURES WITHIN THE SCOPE OF WORK SHALL BE PROVIDED WITH QUICK DISCONNECTS PER NEC 410.130(G).

SK2 ARCHITECTURE
1525 Market St., Suite 200
Denver, CO 80202
p: 303.534.4480

EG POWER ENGINEERING
1701 WASHINGTON AVENUE, GOLDEN, COLORADO 80401
PHONE: 720-533-4850 / FAX:720-533-4851
WWW.EGPOWER.COM

The Professional Architect's seal affixed to this sheet applies only to the material and items shown on this sheet. All drawings, instruments or other documents not exhibiting this seal shall not be considered prepared by this architect, and this architect expressly disclaims any and all responsibility for such plans, drawings or documents not exhibiting this seal.

Rodney F. Gorton
RODNEY F. GORTON
40240
02/05/18

TIMBERLINE LANDSCAPING, Inc.
NEW CONSTRUCTION
8110 OPPORTUNITY WAY
COLORADO SPRINGS, COLORADO 80939

NO.	REVISION / SUBMISSIONS	DATE
	50% Construction Documents	01/26/2018
	100% Construction Documents	02/05/2018

PROJECT NUMBER
2017.031

DATE
02/05/2018

ELECTRICAL LEGEND & SPECIFICATIONS

DRAWING NUMBER

E0.0

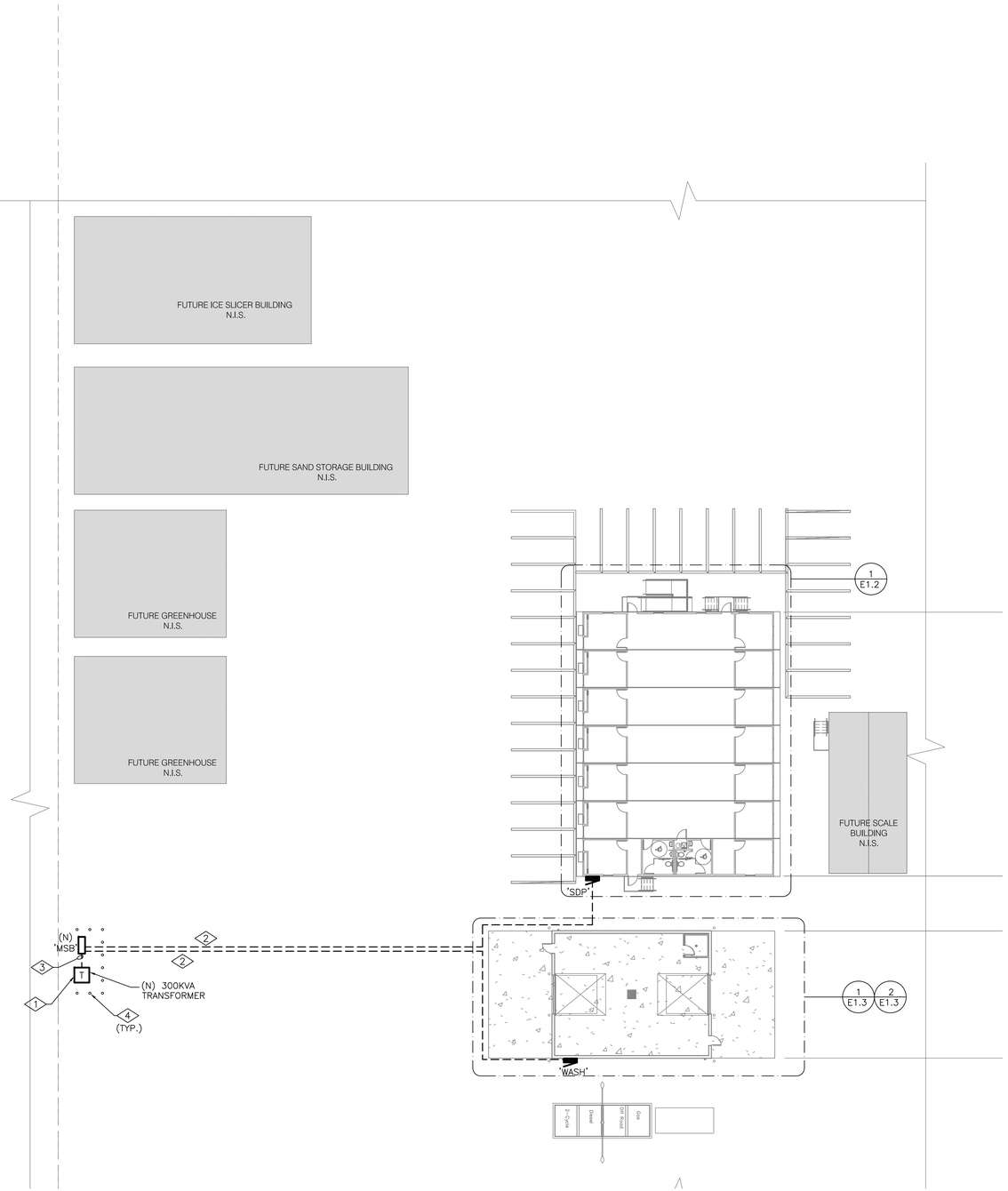

1
E0.1

ELECTRICAL SITE PLAN

SCALE: 1" = 20'-0"

GENERAL NOTES:

1. ELECTRICAL EQUIPMENT INDICATED WITH AN (N) OR HEAVY/CONTINUOUS PEN WEIGHT IS NEW. EQUIPMENT SHOWN LIGHT/CONTINUOUS PEN WEIGHT OR (F) IS FUTURE, UNLESS OTHERWISE NOTED.
2. CONDUITS LOCATED/ROUTED UNDERGROUND SHALL BE RIGID GALVANIZED STEEL OR SCHEDULE 40 PVC.
3. UNDERGROUND SERVICE LATERALS SHALL BE ROUTED AT 30" UNDER FINISHED GRADE UNLESS NOTED OTHERWISE. PROVIDE OZ GEDNEY THROUGH-WALL CONDUIT SLEEVES AT CONDUIT/WALL PENETRATIONS. FIRE-SEAL PENETRATIONS.
4. COORDINATE EXACT UTILITY TRANSFORMER LOCATION/ SIZE WITH MVEA PRIOR TO PAD DESIGN/CONCRETE POUR.
5. THIS DRAWING IS FOR DIAGRAMMATIC USE ONLY. COORDINATE CONDUIT ROUTINGS WITH OWNER/ARCHITECT PRIOR TO ROUGH-IN.
6. COORDINATE PULLBOX LOCATIONS FOR FEEDER CONDUITS WITH OWNER/ARCHITECT PRIOR TO ROUGH-IN. CONDUITS SHALL NOT CONTAIN MORE THAN (4) 90° BENDS.
7. COORDINATE LOCATION OF NEW EQUIPMENT WITH OWNER/ARCHITECT.

DETAILED NOTES:

1. PROPOSED LOCATION OF NEW MVEA PAD MOUNTED TRANSFORMER. REFER TO ONE-LINE DIAGRAM ON DRAWING #1/E2.0 FOR MORE INFORMATION AND GENERAL NOTE #7 FOR MORE DETAIL.
2. REFER TO ONE-LINE DIAGRAM ON DRAWING #1/E2.0 FOR NEW UNDERGROUND CONDUIT/CONDUCTOR SIZE.
3. REFER TO ONE-LINE DIAGRAM ON DRAWING #1/E2.0 FOR NEW UNDERGROUND SERVICE LATERAL CONDUIT/CONDUCTOR SIZE.
4. PROVIDE CONCRETE BOLLARDS AS NECESSARY TO PROTECT/PREVENT DAMAGE TO THE NEW UTILITY TRANSFORMER. COORDINATE LOCATION WITH MVEA PRIOR TO INSTALLATION.

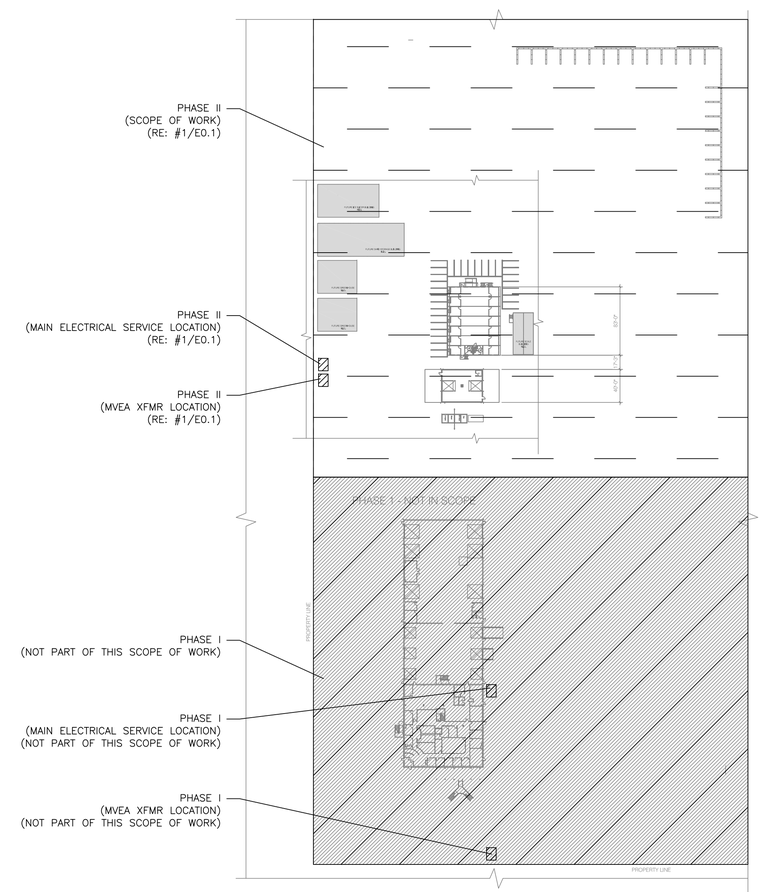

KEYPLAN

SK2 ARCHITECTURE
1525 Market St., Suite 200
Denver, CO 80202
p: 303.534.4480

EG POWER ENGINEERING
1701 WASHINGTON AVENUE, GOLDEN, COLORADO 80401
PHONE: 720-533-4850 / FAX:720-533-4851
WWW.EGPOWER.COM

TIMBERLINE LANDSCAPING, Inc.

NEW CONSTRUCTION

8110 OPPORTUNITY WAY
COLORADO SPRINGS, COLORADO 80939

NO.	REVISION / SUBMISSIONS	DATE
	50% Construction Documents	01/26/2018
	100% Construction Documents	02/05/2018

PROJECT NUMBER	DATE
2017.031	02/05/2018

SITE PLAN

DRAWING NUMBER

E0.1

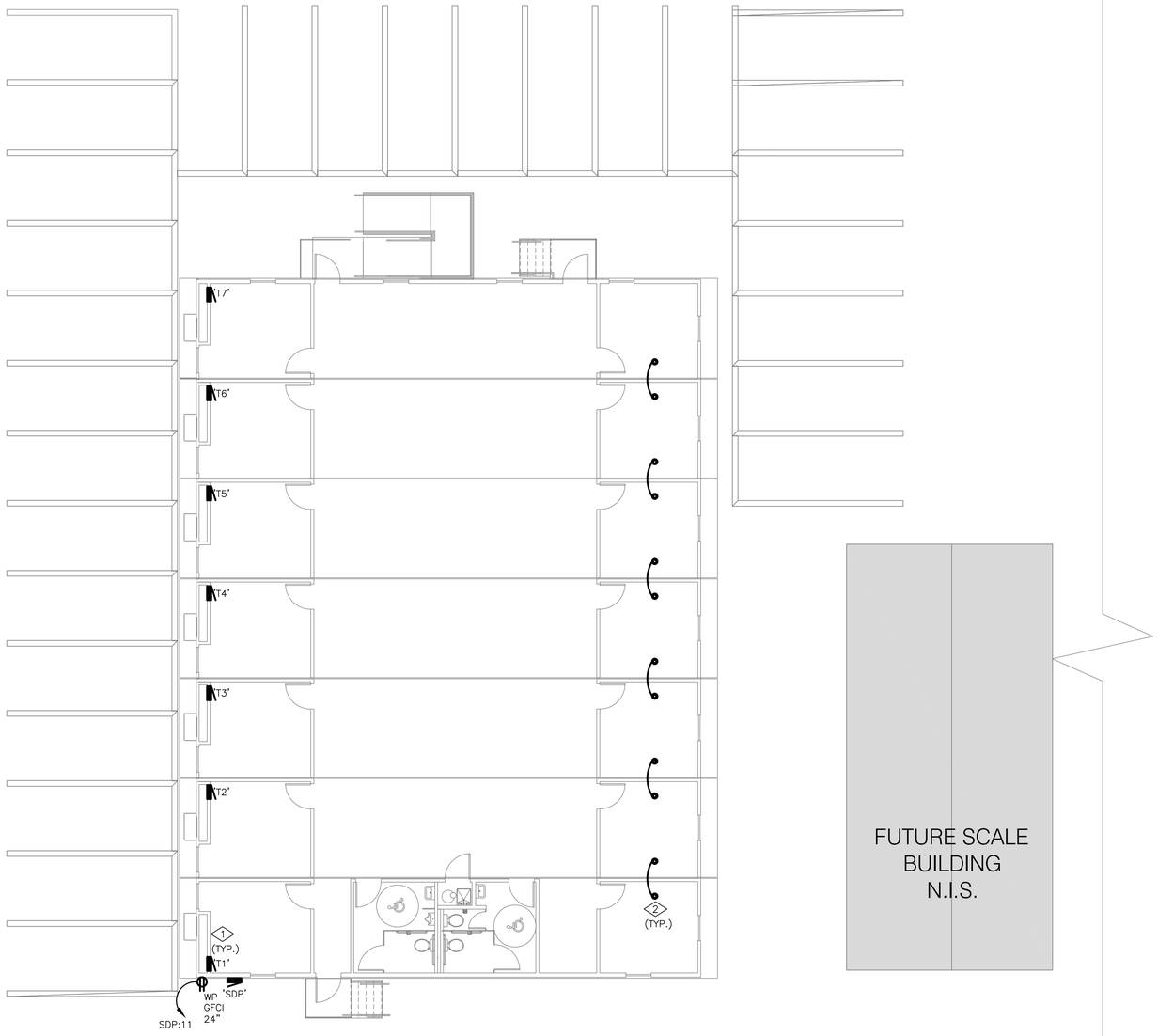

1
E1.2

ENLARGED TEMP OFFICE/SCALE HOUSE ELECTRICAL PLAN

SCALE: 1/8" = 1'-0"

GENERAL NOTES:

1. ELECTRICAL EQUIPMENT INDICATED WITH AN (N) OR HEAVY/CONTINUOUS PEN WEIGHT IS NEW, UNLESS OTHERWISE NOTED.
2. THIS DRAWING IS FOR DIAGRAMMATIC USE ONLY. COORDINATE CONDUIT ROUTINGS WITH OWNER/ARCHITECT PRIOR TO ROUGH-IN.
3. COORDINATE PULLBOX LOCATIONS FOR FEEDER CONDUITS WITH OWNER/ARCHITECT PRIOR TO ROUGH-IN. CONDUITS SHALL NOT CONTAIN MORE THAN (4) 90° BENDS.
4. COORDINATE LOCATION OF NEW EQUIPMENT WITH OWNER/ARCHITECT.
5. EXTERIOR LIGHTING TO BE PROVIDED WITH TEMPORARY OFFICE TRAILERS.

DETAILED NOTES:

1. PANELBOARD PROVIDED WITH TEMPORARY OFFICE TRAILER. COORDINATE EXACT LOCATION IN THE FIELD/MANUFACTURER. REFER TO ONE-LINE DIAGRAM ON DRAWING #1/E2.0 FOR MORE INFORMATION. BRANCH CIRCUITING FROM PANELBOARD TO TRAILER DEVICES/LIGHTING/AC UNIT IS PROVIDED BY OTHERS.
2. PROVIDE #3/0 GROUND BONDING JUMPER BETWEEN TEMPORARY OFFICE TRAILERS TO GROUND EACH TEMPORARY OFFICE TRAILER AS REQUIRED PER THE 2017 NEC.

SK2 ARCHITECTURE
1525 Market St., Suite 200
Denver, CO 80202
p: 303.534.4480

EG POWER ENGINEERING
1701 WASHINGTON AVENUE, GOLDEN, COLORADO 80401
PHONE: 720-533-4850 / FAX:720-533-4851
WWW.EGPOWER.COM

TIMBERLINE LANDSCAPING, Inc.
NEW CONSTRUCTION
8110 OPPORTUNITY WAY
COLORADO SPRINGS, COLORADO 80939

NO.	REVISION / SUBMISSIONS	DATE
	50% Construction Documents	01/26/2018
	100% Construction Documents	02/05/2018

PROJECT NUMBER	DATE
2017.031	02/05/2018

ENLARGED TEMP OFFICE/SCALE HOUSE POWER PLAN

DRAWING NUMBER

E1.2

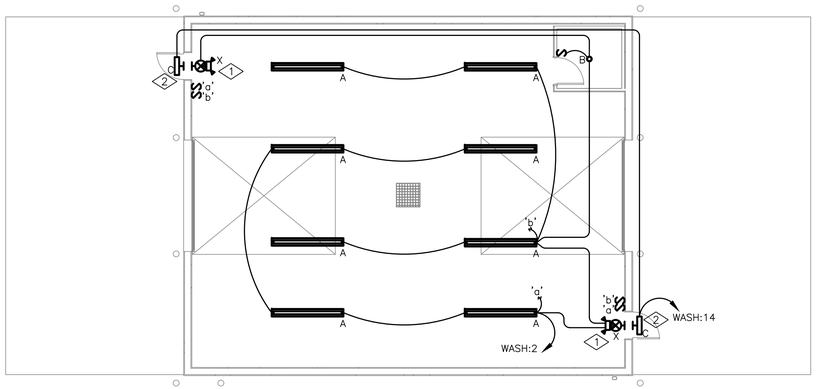

2 E1.3 ENLARGED WASH BAY ELECTRICAL PLAN - LIGHTING

SCALE: 1/8" = 1'-0"

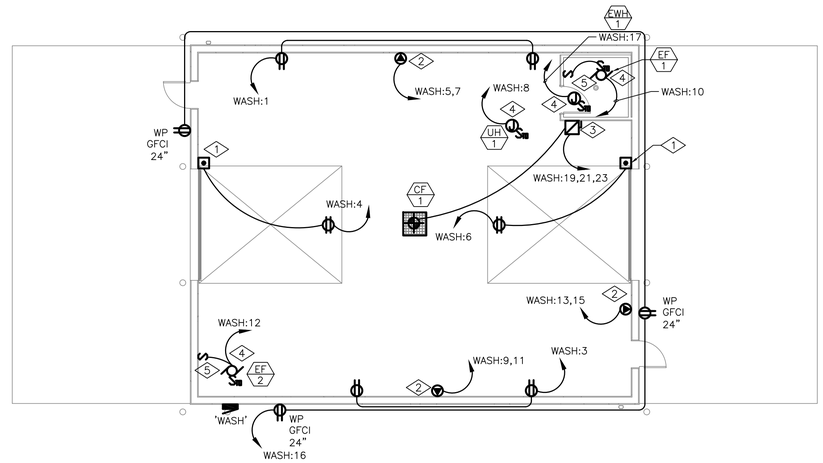

1 E1.3 ENLARGED WASH BAY ELECTRICAL PLAN - POWER

SCALE: 1/8" = 1'-0"

GENERAL NOTES – LIGHTING:

1. ELECTRICAL EQUIPMENT INDICATED WITH AN (N) OR HEAVY/CONTINUOUS PEN WEIGHT IS NEW, UNLESS OTHERWISE NOTED.
2. COORDINATE EXACT LOCATION AND SPECIFICATION OF LIGHTS WITH OWNER PRIOR TO ROUGH–IN.
3. COORDINATE EXACT LOCATION AND SPECIFICATION OF LIGHT SWITCHES WITH OWNER PRIOR TO ROUGH–IN.
4. ELECTRICAL CONNECTIONS IN WASH BAY AREA SHALL BE UL LISTED FOR WET LOCATION.

DETAILED NOTES – LIGHTING:

1. FIXTURE SHALL BE WIRED FOR CONTINUOUS OPERATION.
2. FIXTURE SHALL BE PROVIDED WITH INTERNAL PHOTOCELL FOR 'ON'/'OFF' OPERATION.

GENERAL NOTES – POWER:

1. ELECTRICAL EQUIPMENT INDICATED WITH AN (N) OR HEAVY/CONTINUOUS PEN WEIGHT IS NEW, UNLESS OTHERWISE NOTED.
2. COORDINATE EXACT LOCATION OF EQUIPMENT, NEMA CONFIGURATION AND MOUNTING HEIGHT OF OWNER FURNISHED EQUIPMENT WITH OWNER/INSTALLER PRIOR TO ROUGH–IN. VERIFY IF NEUTRAL IS REQUIRED WHEN NOT INDICATED.
3. 15A & 20A, 125VAC RECEPTACLES IN WASHBAY SHALL BE GFCI AND MOUNTED AT 24"A.F.F., UNLESS OTHER WISE NOTED.
4. ELECTRICAL CONNECTIONS IN WASH BAY AREA SHALL BE UL LISTED FOR WET LOCATION.

DETAILED NOTES – POWER:

1. PROVIDE PUSH BUTTON FOR GARAGE DOOR OPERATION. VERIFY EXACT INSTALLATION REQUIREMENTS WITH EQUIPMENT/SUPPLIER.
2. PROVIDE NEMA 6–30R WITH A WEATHERPROOF COVER. COORDINATE EXACT LOCATION AND NEMA CONFIGURATION WITH ARCHITECT/OWNER PRIOER TO ROUGH–IN. BRANCH 2#10 & 1#10G IN A 3/4"C.
3. PROVIDE 240VAC, 30A/3P/3AF, NEMA 3R FUSED DISCONNECT SWITCH FOR FAN. BRANCH: 3#12 & 1#12G IN A 1/2"C.
4. PROVIDE A 30A/1P, 120VAC, NEMA 3R MOTOR RATED TOGGLE DISCONNECT SWITCH IF ONE IS NOT PROVIDED BY DIVISION 23. COORDINATE WITH MECHANICAL DRAWINGS/INSTALLER PRIOR TO ROUGH–IN.
5. COORDINATE 'ON'/'OFF' OPERATION WITH MECHANICAL DRAWINGS/INSTALLER PRIOR TO ROUGH–IN.

LUMINAIRE SCHEDULE

KEY	LAMP	DESCRIPTION	MOUNTING	MFGR	CATALOG NUMBER	VOLTS	NOTES
A	107W LED 4000K	1x4, LED STRIP LIGHT WITH CLEAR POLYCARBONATE LENS, WET LOCATION LISTED	PENDANT	LITHONIA	VAP–12000LM–PCL–MD–120–40K–90CRI–CMB	120	1,2,3,4
B	20.5W LED 4000K	6" LED CYLINDER	CEILING GYP	LITHONIA	LDN6CYL 35/15 L06WR LSS 120 FCM DWHG	120	1,2,3,4
C	104W LED 4000K	EXTERIOR LED WALL PACK	WALL	LITHONIA	TWH LED 30C 1000 40K T3M 120 PE ELCW	120	1,2,3,4
X	4.3W LED	EXIT SIGN/EMERGENCY WALL PACK COMBINATION	SURFACE	LITHONIA	LHQM LED R	120	1,2,3,4

NOTES:
1. CONFIRM LUMINAIRE SELECTION WITH OWNER/ARCHITECT PRIOR TO ORDERING. WATTAGE OF LAMP SHOWN SHALL NOT BE EXCEEDED.
2. CONFIRM MOUNTING HEIGHT WITH THE ARCHITECT/OWNER PRIOR TO ROUGH–IN.
3. COORDINATE POWER CONNECTION AND FINAL CONNECTIONS TO LIGHT FIXTURES WITH MANUFACTURER.
4. CONTRACTOR SHALL PROVIDE AND INSTALL BRACKETS AS REQUIRED.

SK2 ARCHITECTURE
1525 Market St., Suite 200
Denver, CO 80202
p: 303.534.4480

EG POWER ENGINEERING
1701 WASHINGTON AVENUE, GOLDEN, COLORADO 80401
PHONE: 720-533-4850 / FAX:720-533-4851
WWW.EGPOWER.COM

TIMBERLINE LANDSCAPING, Inc.
NEW CONSTRUCTION
8110 OPPORTUNITY WAY
COLORADO SPRINGS, COLORADO 80939

NO.	REVISION / SUBMISSIONS	DATE
	50% Construction Documents	01/26/2018
	100% Construction Documents	02/05/2018

PROJECT NUMBER 2017.031
DATE 02/05/2018

WASH BAY ELECTRICAL PLAN

DRAWING NUMBER

E1.3

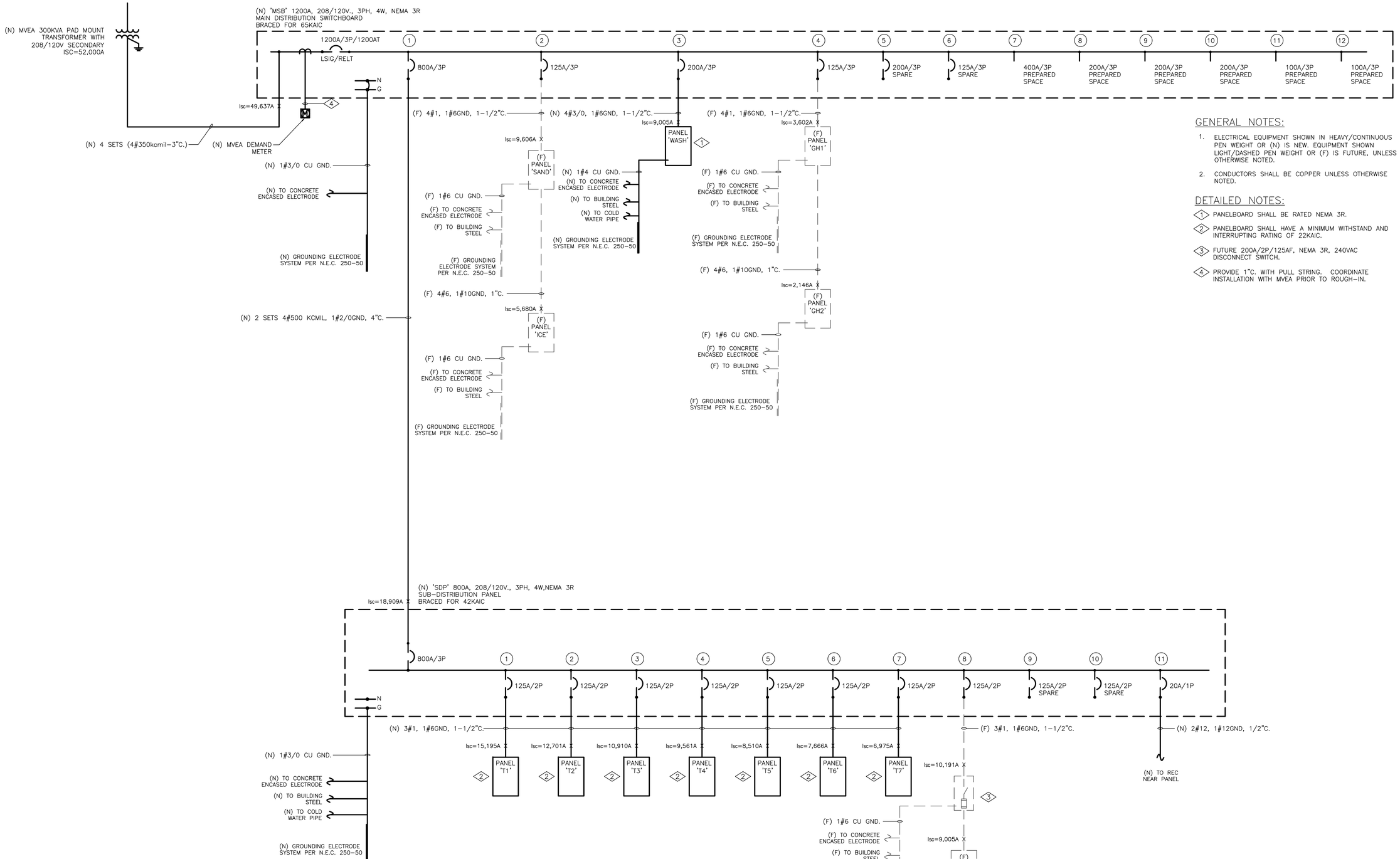

1 / E1.0 ONE-LINE DIAGRAM

SCALE: NONE

GENERAL NOTES:

1. ELECTRICAL EQUIPMENT SHOWN IN HEAVY/CONTINUOUS PEN WEIGHT OR (N) IS NEW. EQUIPMENT SHOWN LIGHT/DASHED PEN WEIGHT OR (F) IS FUTURE, UNLESS OTHERWISE NOTED.
2. CONDUCTORS SHALL BE COPPER UNLESS OTHERWISE NOTED.

DETAILED NOTES:

1. PANELBOARD SHALL BE RATED NEMA 3R.
2. PANELBOARD SHALL HAVE A MINIMUM WITHSTAND AND INTERRUPTING RATING OF 22KAIC.
3. FUTURE 200A/2P/125AF, NEMA 3R, 240VAC DISCONNECT SWITCH.
4. PROVIDE 1"C. WITH PULL STRING. COORDINATE INSTALLATION WITH MVEA PRIOR TO ROUGH-IN.

SK2 ARCHITECTURE
1525 Market St., Suite 200
Denver, CO 80202
p: 303.534.4480

EG POWER ENGINEERING
1701 WASHINGTON AVENUE, GOLDEN, COLORADO 80401
PHONE: 720-533-4850 / FAX:720-533-4851
WWW.EGPOWER.COM

TIMBERLINE LANDSCAPING, Inc.

NEW CONSTRUCTION

8110 OPPORTUNITY WAY
COLORADO SPRINGS, COLORADO 80939

NO.	REVISION / SUBMISSIONS	DATE
	50% Construction Documents	01/26/2018
	100% Construction Documents	02/05/2018

PROJECT NUMBER: 2017.031
DATE: 02/05/2018

ELECTRICAL ONE - LINE DIAGRAM

DRAWING NUMBER

E2.0

Short Circuit Calculation

Voltage: 208 V

Isc(XFMR) = 52,000

To 'MSB':
Length of Conductors = 10
Conductor = #350kcmil
C Value of Conductors = 22737
# of Parallel Conductors = 4

f = 0.0476 f = (1.732*L*Isc)/(C*EL-L)
M = 0.9546 M = 1/(1+f)
Isc = 49637 A Isc = (Isc*M)

To (FUTURE) 'PANEL 'SAND':
Length of Conductors = 75
Conductor = #1AWG
C Value of Conductors = 7439
# of Parallel Conductors = 1

f = 4.1671
M = 0.1935
Isc = 9606 A

To (FUTURE) 'PANEL 'ICE':
Length of Conductors = 21
Conductor = #6AWG
C Value of Conductors = 2430
# of Parallel Conductors = 1

f = 0.6913
M = 0.5913
Isc = 5680 A

To 'PANEL 'WASH':
Length of Conductors = 152
Conductor = #3/0AWG
C Value of Conductors = 13923
# of Parallel Conductors = 1

f = 4.5123
M = 0.1814
Isc = 9005 A

To (FUTURE) 'PANEL 'GH1':
Length of Conductors = 230
Conductor = #1AWG
C Value of Conductors = 7439
# of Parallel Conductors = 1

f = 12.7791
M = 0.0726
Isc = 3602 A

To (FUTURE) 'PANEL 'GH2':
Length of Conductors = 55
Conductor = #6AWG
C Value of Conductors = 2430
# of Parallel Conductors = 1

f = 0.6789
M = 0.5956
Isc = 2146 A

To 'SDP':
Length of Conductors = 210
Conductor = #500kcmil
C Value of Conductors = 26706
# of Parallel Conductors = 2

f = 1.6251 f = (1.732*L*Isc)/(C*EL-L)
M = 0.3809 M = 1/(1+f)
Isc = 18909 A Isc = (Isc*M)

To PANEL 'T1':
Length of Conductors = 10
Conductor = #1AWG
C Value of Conductors = 7439
# of Parallel Conductors = 1

f = 0.2444 f = (2*L*Isc)/(C*EL-L)
M = 0.8036 M = 1/(1+f)
Isc = 15195 A Isc = (Isc*M)

To PANEL 'T2':
Length of Conductors = 20
Conductor = #1AWG
C Value of Conductors = 7439
# of Parallel Conductors = 1

f = 0.4888
M = 0.6717
Isc = 12701 A

To PANEL 'T3':
Length of Conductors = 30
Conductor = #1AWG
C Value of Conductors = 7439
# of Parallel Conductors = 1

f = 0.7332
M = 0.5770
Isc = 10910 A

To PANEL 'T4':
Length of Conductors = 40
Conductor = #1AWG
C Value of Conductors = 7439
# of Parallel Conductors = 1

f = 0.9776
M = 0.5057
Isc = 9561 A

To PANEL 'T5':
Length of Conductors = 50
Conductor = #1AWG
C Value of Conductors = 7439
# of Parallel Conductors = 1

f = 1.2220
M = 0.4500
Isc = 8510 A

To PANEL 'T6':
Length of Conductors = 60
Conductor = #1AWG
C Value of Conductors = 7439
# of Parallel Conductors = 1

f = 1.4665
M = 0.4054
Isc = 7666 A

To PANEL 'T7':
Length of Conductors = 70
Conductor = #1AWG
C Value of Conductors = 7439
# of Parallel Conductors = 1

f = 1.7109
M = 0.3689
Isc = 6975 A

To (FUTURE) 200A/2P DISC.:
Length of Conductors = 35
Conductor = #1AWG
C Value of Conductors = 7439
# of Parallel Conductors = 1

f = 0.8554
M = 0.5390
Isc = 10191 A

To (FUTURE) PANEL 'SCALES':
Length of Conductors = 10
Conductor = #1AWG
C Value of Conductors = 7439
# of Parallel Conductors = 1

f = 0.1317
M = 0.8836
Isc = 9005 A

Voltage Drop (Based on IEEE Std. 141 1993)

From Panel 'MSB' to (FUTURE) Panel 'GH1'
V-drop allowed (208V*.03) = 6.24

Length: 230
Amperage: 100
Conductor: #1
Power Factor: 0.90
Voltage Drop Value: 2.7
Multiplier (three phase L-L) 1

A-ft = 23000 (Length*Amperage)
V-Drop = 6.2 (A-Ft/10000*Vdrop value*Multiplier)

From Panel 'MSB' to (FUTURE) Panel 'SAND'
V-drop allowed (208V*.03) = 6.24

Length: 75
Amperage: 100
Conductor: #1
Power Factor: 0.90
Voltage Drop Value: 2.7
Multiplier (three phase L-L) 1

A-ft = 7500 (Length*Amperage)
V-Drop = 2.0 (A-Ft/10000*Vdrop value*Multiplier)

From Panel 'MSB' to Panel 'SDP'
V-drop allowed (208V*.03) = 6.24

Length: 210
Amperage: 800
Conductor: 500kcmil
Power Factor: 0.90
Voltage Drop Value: 0.68
Multiplier (three phase L-L) 1

A-ft = 168000 (Length*Amperage)
V-Drop = 11.4 (A-Ft/10000*Vdrop value*Multiplier)
Total V-Drop = 5.7 2 Sets 4#500kcmil

From Panel 'MSB' to Panel 'WASH'
V-drop allowed (208V*.03) = 6.24

Length: 172
Amperage: 200
Conductor: #3/0
Power Factor: 0.90
Voltage Drop Value: 1.5
Multiplier (three phase L-L) 1

A-ft = 34400 (Length*Amperage)
V-Drop = 5.2 (A-Ft/10000*Vdrop value*Multiplier)

COMcheck Software Version 4.0.7.2 Review

Interior Lighting Compliance Certificate

Section 1: Project Information

Energy Code: 2009 IECC
Project Title: Timberline Landscaping
Project Type: New Construction

Construction Site:
8110 Opportunity Way
Colorado Springs, CO 80939

Owner/Agent:
Geneva Kowalski
SK2 Architecture
1525 Market St
Suite 200
Denver, CO 80202
303-534-4480
gena-s.kowalski@sk2arch.com

Designer/Contractor:
Rodney F. Gorton, P.E.
EG Power Engineering
1701 Washington Ave
Golden, CO 80401
720-533-4850
rgorton@egpower.com

Section 2: Interior Lighting and Power Calculation

A Area Category	B Floor Area (ft2)	C Allowed Watts / ft2	D Allowed Watts (B x C)
WashBay (Workshop)	2018	1.4	2825
		Total Allowed Watts =	2825

Section 3: Interior Lighting Fixture Schedule

A Fixture ID : Description / Lamp / Wattage Per Lamp / Ballast	B Lamps/ Fixture	C # of Fixtures	D Fixture Watt.	E (C X D)
WashBay (Workshop 2018 sq.ft.)				
LED 1: A: 1X4 LED STRIP LIGHT: Other:	1	8	107	858
LED 2: B: 8" LED CYLINDER: LED Other Fixture Unit 26W:	1	1	20.5	20.5
LED 3: D: LED WALL PACK: Other:	1	2	104	208
LED 4: X: LED EXIT SIGN COMBO: LED Other Fixture Unit 8.8W:	1	2	4.3	8.6
			Total Proposed Watts =	1093

Section 4: Requirements Checklist

Interior Lighting PASSES: Margin 61% Better than code

Lighting Wattage:

☒ 1. Total proposed watts must be less than or equal to total allowed watts.

Allowed Watts	Proposed Watts	Complies
2825	1093	YES

Controls, Switching, and Wiring:

☐ 2. Daylight zones under skylights more than 15 feet from the perimeter have lighting controls separate from daylight zones adjacent to vertical fenestration.

☐ 3. Daylight zones have individual lighting controls independent from that of the general area lighting.

Exceptions:

☐ Contiguous daylight zones spanning no more than two orientations are allowed to be controlled by a single controlling device.

☐ Daylight spaces enclosed by walls or ceiling height partitions and containing two or fewer light fixtures are not required to have a separate switch for general area lighting.

☒ 4. Independent controls for each space (switch/occupancy sensor).

Exceptions:

☐ Areas designated as security or emergency areas that must be continuously illuminated.

☐ Lighting in stairways or corridors that are elements of the means of egress.

☐ 5. Master switch at entry to hotel/motel guest room.

☐ 6. Individual dwelling units separately metered.

☐ 7. Medical task lighting or architectural display lighting claimed to be exempt from compliance has a control device independent of the control of the nonexempt lighting.

☒ 8. Each space required to have a manual control also allows for reducing the connected lighting load by at least 50 percent by either controlling all luminaires, dual switching of alternate rows of luminaires, alternate luminaires, or alternate lamps, switching the middle lamp luminaires independently of other lamps, or switching each luminaire or each lamp.

Exceptions:

☒ Only one luminaire in space.

☐ An occupant-sensing device controls the area.

☐ The area is a corridor, storeroom, restroom, public lobby or sleeping unit.

☐ Areas that use less than 0.6 Watts/sq.ft.

☐ 9. Automatic lighting shutoff control in buildings larger than 5,000 sq.ft.

Exceptions:

☐ Sleeping units, patient care areas; and spaces where automatic shutoff would endanger safety or security.

☒ 10. Photocell/astronomical time switch on exterior lights.

Exceptions:

☒ Lighting intended for 24 hour use.

☐ 11. Tandem wired one-lamp and three-lamp ballasted luminaires (No single-lamp ballasts).

Exceptions:

☐ Electronic high-frequency ballasts; Luminaires on emergency circuits or with no available pair.

Section 5: Compliance Statement

Compliance Statement: The proposed lighting design represented in this document is consistent with the building plans, specifications and other calculations submitted with this permit application. The proposed lighting system has been designed to meet the 2009 IECC requirements in COMcheck Version 4.0.7.2 Review and to comply with the mandatory requirements in the Requirements Checklist.

RODNEY F. GORTON, P.E. — Name - Title
Signature
2/5/2018 — Date

PANEL: WASH
VOLTAGE: 208/120 PHASE: 3 WIRE: 4
AIC: 22000 BUS AMPACITY: 200 TERMINATION: 200 MCB
ENCLOSURE: NEMA 3R MOUNTING: SURFACE

CKT NO	DESCRIPTION	LOAD VA	LOAD TYPE	CKT P	BREAKER A	BREAKER OPT	CKT OPT	BREAKER A	BREAKER P	LOAD TYPE	LOAD VA	DESCRIPTION	CKT NO
1	(N) REC. NORTH	360	R	1	20			20	1	L	1093	LIGHTING	2
3	(N) REC. SOUTH	360	R	1	20			20	1	R	1600	(N) GARAGE WEST	4
5	(N) SPECIAL NORTH	2100	N	2	30			20	1	R	1600	(N) GARAGE EAST	6
7	/	2100	N	/	/			20	1	N	886	UH-1	8
9	(N) SPECIAL SOUTH	2100	N	2	30			20	1	M	100	EF-1	10
11	/	2100	N	/	/			20	1	M	696	EF-2	12
13	(N) SPECIAL EAST	2100	N	2	30			20	1	L	208	LIGHTING EXT.	14
15	/	2100	N	/	/			20	1	R	540	REC EXT.	16
17	EWH-1	1440	N	1	20			20	1		0	SPARE	18
19	CF-1	250	M	3	20			20	1		0	SPARE	20
21	/	250	M	/	/			20	1		0	SPARE	22
23	/	250	M	/	/			20	1		0	SPARE	24
25	SPACE	0		0	0			0	0		0	SPACE	26
27	SPACE	0		0	0			0	0		0	SPACE	28
29	SPACE	0		0	0			0	0		0	SPACE	30
31	SPACE	0		0	0			0	0		0	SPACE	32
33	SPACE	0		0	0			0	0		0	SPACE	34
35	SPACE	0		0	0			0	0		0	SPACE	36
37	SPACE	0		0	0			0	0		0	SPACE	38
39	SPACE	0		0	0			0	0		0	SPACE	40
41	SPACE	0		0	0			0	0		0	SPACE	42

LOAD SUMMMARY

	CONNECTED KVA	CONNECTED KVA	LOAD TYPE	DEMAND FACTOR	DEMAND KVA	
A PHASE:	7.0	1.3	LIGHTING (L)	1.25	1.6	
B PHASE:	7.1	4.5	RECEPTACLE (R)	1.00	4.5	
C PHASE:	8.2		REC (>10000VA) (R)	0.50	0.0	
TOTAL:	22.2	0.0	HVAC (H)	1.25	0.0	
		1.5	LARGEST MOTOR (M)	1.25	2.6	
			REMAIN MOTOR (M)	1.00	0.0	
		14.9	KNOWN DEMAND (N)	1.00	14.9	
		0.0	KITCHEN DEMAND (K)	1.00	0.0	
TOTAL (KVA) ->		22.2			23.6	<- TOTAL (KVA)
					65.5	<- TOTAL (A/PH)

ELECTRICAL LOAD ANALYSIS (N) 'MSB'

LOADS		KVA
1) NEW LOADS PER TENANT REMODEL:		
A. PANEL 'SDP' =	166.6	
B. PANEL 'WASH' =	23.6	
C. TOTAL NEW CALCULATED LOAD PER TENANT REMODEL =		190.2
2) FUTURE LOADS ADDED TO SWBD 'MSB' :		
A. PANEL 'SAND' (FUTURE) =	36.0	
B. PANEL 'GH1' (FUTURE) =	36.0	
C. TOTAL FUTURE CALCULATED LOAD PER TENANT REMODEL =		72.0
3) TOTAL NEW LOAD ON PANEL 'MSB' =		262.2

The calculated demand load on the new 1200A service is 262.2 kva or 726.3 amps at 208/120V., 3 phase.

ELECTRICAL LOAD ANALYSIS (N) 'SDP'

LOADS		KVA
1) NEW LOADS PER TENANT REMODEL:		
A. PANEL 'T1' =	20.8	
B. PANEL 'T2' =	20.8	
C. PANEL 'T3' =	20.8	
D. PANEL 'T4' =	20.8	
E. PANEL 'T5' =	20.8	
F. PANEL 'T6' =	20.8	
G. PANEL 'T7' =	20.8	
H. RECEPTACLE =	0.2	
I. TOTAL NEW LOADS PER TENANT REMODEL =		145.6
2) TOTAL FUTURE LOAD ADDED TO PANEL 'MDP' =		
A. PANEL 'SCALES' (FUTURE)=	20.8	
B. TOTAL FUTURE CALCULATED LOAD PER TENANT REMODEL =		20.8
3) TOTAL NEW LOAD ON PANEL 'SDP' =		166.6

The calculated demand load on the new 800A service is 166.6 kva or 461.5 amps at 208/120V., 3 phase.

SK2 ARCHITECTURE
1525 Market St., Suite 200
Denver, CO 80202
p: 303.534.4480

EG POWER ENGINEERING
1701 WASHINGTON AVENUE, GOLDEN, COLORADO 80401
PHONE: 720-533-4850 / FAX:720-533-4851
WWW.EGPOWER.COM

TIMBERLINE LANDSCAPING, Inc.
NEW CONSTRUCTION
8110 OPPORTUNITY WAY
COLORADO SPRINGS, COLORADO 80939

NO.	REVISION / SUBMISSIONS	DATE
	50% Construction Documents	01/26/2018
	100% Construction Documents	02/05/2018

PROJECT NUMBER 2017.031
DATE 02/05/2018

ELECTRICAL SCHEDULES & CALCULATIONS

DRAWING NUMBER
E3.0